ENTERED

Department of Energy
Carlsbad Field Office
P. O. Box 3090
Carlsbad, New Mexico 88221

NOV 25 2014

RECEIVED
DEC 1 2014
NMED
Hazardous Waste Bureau

Mr. John E. Kieling, Chief
Hazardous Waste Bureau
New Mexico Environment Department
2905 Rodeo Park Drive East, Bldg. 1
Santa Fe, New Mexico 87505-6303

Subject: Transmittal of the Final Audit Report for Recertification Audit A-15-01 of the Advanced Mixed Waste Treatment Project

Dear Mr. Kieling:

This letter transmits the Final Audit Report for Carlsbad Field Office (CBFO) Recertification Audit A-15-01 of the Advanced Mixed Waste Treatment Project for processes performed to characterize and certify waste in accordance with the Waste Isolation Pilot Plant Hazardous Waste Facility Permit. Recertification Audit A-15-01 was conducted October 7-9, 2014.

I certify under penalty of law that this document and all attachments were prepared under my direction or supervision in accordance with a system designed to assure that qualified personnel properly gather and evaluate the information submitted. Based on my inquiry of the person or persons who manage the system, or those persons directly responsible for gathering the information, the information submitted is, to the best of my knowledge and belief, true, accurate, and complete. I am aware that there are significant penalties for submitting false information, including the possibility of fines and imprisonment for knowing violations.

Please contact Mr. Michael R. Brown, CBFO Quality Assurance Director, at (575) 234-7476, should you have any questions concerning the audit report.

Sincerely,

Jose R. Franco, Manager
Carlsbad Field Office

for

Enclosure

CBFO:QAD:MRB:RMS:14-1396:UFC 2300.00

141135

cc: w/report narrative

D. Bryson, CBFO	*ED
M. Brown, CBFO	ED
J.R. Stroble, CBFO	ED
G. Basabilvazo, CBFO	ED
M. Navarrete, CBFO	ED
D. Miehls, CBFO	ED
N. Castaneda, CBFO	ED
J. Zimmerman, DOE-ID	ED
J. Wells, DOE-ID	ED
B. Roberts, DOE-ID	ED
T. Jenkins, DOE-ID	ED
D. Haar, AMWTP	ED
G. Byram, AMWTP	ED
G. Tedford, AMWTP	ED
A. Morse, AMWTP	ED
T. Peake, EPA	ED
L. Bender, EPA	ED
E. Feltcorn, EPA	ED
R. Joglekar, EPA	ED
S. Ghose, EPA	ED
R. Lee, EPA	ED
R. Maestas, NMED	ED
S. Holmes, NMED	ED
C. Smith, NMED	ED
V. Daub, CTAC	ED
R. Allen, CTAC	ED
P. Martinez, CTAC	ED
B. Pace, CTAC	ED
C. Castillo, CTAC	ED
D. Harvill, CTAC	ED
G. White, CTAC	ED
Site Documents	ED
WWIS Database Administrators	ED
R. Chavez, RES	ED
W. Most, RES	ED
J. Haschets, RES	ED
B. Carlsen, RES	ED
A. Urquidez, RES	ED
RCRA Chronology Record	ED

*ED denotes electronic distribution

cc: w/enclosures

WIPP Operating Record, MS: 452-09	*EF
CBFO QA File	EF
CBFO M&RC	EF

*EF denotes electronic format

CBFO:QAD:MRB:RMS:14-1396:UFC 2300.00

U.S. Department of Energy
Carlsbad Field Office

CONTENT MAP

Final Audit Report of Audit A-15-01 of the Advanced Mixed Waste Treatment Project (AMWTP) Waste Characterization and Certification Program

Audit Number A-15-01
October 7 – 9, 2014

CONTENT MAP

This box contains the Final Audit Report of CBFO Audit A-15-01 of the of the AMWTP Quality Assurance Program and the AMWTP Transuranic (TRU) Waste Characterization and Certification Program conducted October 7- 9, 2014. The box also contains a list of objective evidence used to conduct the audit. The documents have been organized into color-coded folders, one each for the AMWTP Implementing Procedures (purple folder), Final Audit Report (manila folder), the C-6 Checklist (brown folder), General Information (green folder), Acceptable Knowledge (blue folder), Real-Time Radiography (red folder), and Visual Examination (yellow folder). The list below identifies each document by name and number and indicates where each may be found.

CONTENT MAP	**Black Folder**

Final Audit Report	**Manila Folder**

Final Audit Report
- Attachment 1 – Personnel Contacted During the Audit
- Attachment 2 – Personnel Contacted During the Audit by Subject Area
- Attachment 3 – Objective Evidence Compiled During the Audit (provided in boxes)
- Attachment 4 – Table of Audited Documents
- Attachment 5 – Lists of Processes and Equipment Evaluated During the Audit
- Attachment 6 – Procedure Revision Matrix

C6 Checklist	**Brown Folder**
C6-1	Waste Analysis Plan (WAP) Checklist
C6-2	Acceptable Knowledge (AK) Checklist
C6-3	Radiography (RTR) Checklist
C6-4	Visual Examination (VE) Checklist

AMWTP TRU Program Implementing Procedures Audited
Purple Folder

See Final Report Attachment 4 for List of Audited AMWTP Procedures

Attachment 3 - Objective Evidence

General Information (Checklist C6-1) Waste Analysis Plan (WAP)	**Green Folder**
GEN1	Batch Data Reports - RTR13-00242, RTR13-00305, RTR14-00005, and RTR14-00086
GEN2	Batch Data Reports - VEB13-00526, VEB14-00003, VEB14-00162, VEB14-00254, and VNC14-00022
GEN3	Acceptable Knowledge Document Review Summaries
GEN4	Quarter Level 1 Data Generation Level Batch Review #87995 AMWTP Surveillance Report.
GEN5	Nonconformance Reports: 74039, 74582, 75766, and 75801
GEN6	Nonconformance Reports: 81196, 81217, 82907, 82950, 88128, and 88321
GEN7	Waste Characterization Case Files containing WWIS/WDS Waste

	Container Data Report, Container Data Approval Form-1936, WDS Certification Data Entry Form (WCDEF), and supporting forms and data for containers: 10295803, 10018127, BN10493493, BN10514268, 10367054, and BN10528597
GEN8	Project Record Categories, Classification, Disposition, and Retention Matrix (Appendix B of MP-DOCS-18.2.)
GEN9	Qualification records for selected AMWTP personnel
GEN10	Hazardous Waste Manifests
GEN11	Training/Qualification records for Acceptable Knowledge and site project management personnel performing characterization-related activities
Acceptable Knowledge (Checklist C6-2)	**Blue Folder**
AK1	AK Summary for Supercompacted Debris Waste (BN510.3), RPT-TRUW-83, Rev. 8, S. 1.2.7
AK2	AK Summary for Special Setups Waste (BN004) RPT-TRUW-59, Rev. 4, S 1.2.7
AK3	Waste Stream Profile Form and attachments for waste stream BN510.3
AK4	Waste Stream Profile Form and attachments for waste stream BN004
AK5	AK Document for AMWTP Waste, RPT-TRUW-06, Rev. 16
AK6	AK Document for INL Stored TRU Waste-Rocky Flats Plant, RPT-TRUW-56, Rev. 6
AK7	AK Source Document Summaries for waste stream BN510.3
AK8	AK Source Document Summaries for waste stream BN004
AK9	WTS Database Container Inventory and screen shots
AK10	AMWTP Waste Stream Designations, RPT-TRUW-12, Rev. 24
AK11	AK Discrepancy Resolutions in the AK record
AK12	AK Discrepancy Resolutions from Characterization and AK Reevaluations
AK13	AK Forms 1066 TRU Waste Management AK Checklist and 1067 TRU Waste Stream AK Documentation Checklist for waste streams BN510.3 and BN004
AK14	Waste Matrix Code Reference Manual, RPT-TRUW-05, Rev. 36
AK15	Memos supporting waste material parameter evaluation for waste streams BN510.3 and BN004
AK16	NCRs for prohibited items
AK17	Hold” Tag
AK18	Database Electronic Hold on Container
AK19	AK Source Document Reference List
AK20	AMWTP Surveillance Report No. 74798 and Independent Assessment No. IA-14-002
AK21	AK Accuracy Report
AK22	AK Resolution Ledger
AK23	Batch Data Report - RTR14-00005
AK24	Batch Data Report - RTR14-00006
AK25	Batch Data Report - RTR14-00067
AK26	Batch Data Report - RTR13-00213
AK27	Batch Data Report - RTR13-00275
AK28	Batch Data Report - RTR03-00066

AK29 AK30 AK31 AK32	Batch Data Report - VEB14-00098 Batch Data Report - VEB14-00099 Batch Data Report - VEB14-00100 Data Reconciliation Reports for waste streams BN510.3 and BN004
Real-Time Radiography (Checklist C6-3)	**Red Folder**
RTR1 RTR2	Batch Data Reports - RTR13-00241, RTR13-00280, RTR13-00324, RTR14-00018, RTR14-00037, and RTR14-00233 Qualification records for two RTR operators
Visual Examination (Checklist C6-4)	**Yellow Folder**
VE1 VE2 VE3	Batch Data Reports - VNC13-00170, VEB13-00518, VNC14-00022, VEB14-00026, VEB14-00054, VEB14-00079, VEB14-00117, VEB14-00146, VEB14-00180, VEB14-00212, and VEB14-00254 Training and Qualification Records for VE Operators Training and Qualification Records for VE Experts and VE Experts Appointment Memorandum

U.S. DEPARTMENT OF ENERGY
CARLSBAD FIELD OFFICE

FINAL AUDIT REPORT

OF THE

ADVANCED MIXED WASTE TREATMENT PROJECT

TRU WASTE CHARACTERIZATION AND CERTIFICATION ACTIVITIES

IDAHO FALLS, IDAHO

AUDIT NUMBER A-15-01

October 7 - 9, 2014

Prepared by: Cindi Castillo **Date:** 11/12/14

Cindi Castillo, CTAC
Audit Team Leader

Approved by: Michael R. Brown **Date:** 11/20/2014

Michael R. Brown, Director
CBFO Quality Assurance Division

1.0 EXECUTIVE SUMMARY

U.S. Department of Energy (DOE) Carlsbad Field Office (CBFO) Recertification Audit A-15-01 was conducted to evaluate the adequacy, implementation, and effectiveness of Advanced Mixed Waste Treatment Project (AMWTP) transuranic (TRU) waste characterization and certification activities performed at the Idaho National Laboratory (INL) relative to the requirements detailed in the Waste Isolation Pilot Plant (WIPP) Hazardous Waste Facility Permit (HWFP) and the *CBFO Quality Assurance Program Document* (QAPD).

The audit was performed at the INL site and the AMWTP Energy Drive Facility (EDF) in Idaho Falls, Idaho, October 7 - 9, 2014. The audit team concluded that, overall, the AMWTP technical and quality assurance (QA) programs, as applicable to the audited activities, were adequate in addressing HWFP *Waste Analysis Plan* (WAP) and QAPD requirements. The audit team concluded that, overall, the defined AMWTP programs for characterizing contact-handled (CH) Summary Category Group (SCG) S3000 homogeneous solids and CH SCG S5000 debris waste were satisfactorily implemented and effective in achieving the desired results.

The audit team identified no WAP-related conditions adverse to quality (CAQs) resulting in corrective action reports (CARs) during the audit. No WAP-related deficiencies, isolated in nature and requiring only remedial corrective action, were identified and corrected during the audit (CDA). No WAP-related Observations were identified during the audit.

2.0 SCOPE AND PURPOSE

2.1 Scope

The audit team evaluated the adequacy, implementation, and effectiveness of the AMWTP TRU waste characterization and certification activities for CH SCG S3000 homogeneous solids and CH SCG S5000 debris waste.

The following general areas, as required by Attachment C6, Section C6-3 of the HWFP, were audited:

- Results of Previous Audits
- Changes in Programs or Operations
- New Programs or Activities Being Implemented
- Changes in Key Personnel

The following WAP-related QA elements were audited:

- Personnel Qualification and Training
- Nonconformances
- Records

The following WAP-related waste characterization technical elements were audited for CH SCG S3000 homogeneous solids and CH SCG S5000 debris waste:

- Acceptable Knowledge (AK) including waste certification (i.e., Waste Stream Profile Forms)
- Project-Level Data Validation and Verification (V&V)
- Real-time Radiography (RTR)
- Visual Examination (VE)
- WIPP Waste Information System/Waste Data System (WWIS/WDS)

Evaluation of adequacy of AMWTP documents was based on the current revisions of the following documents:

- *CBFO Quality Assurance Program Document,* DOE/CBFO-94-1012
- Hazardous Waste Facility Permit, Waste Isolation Pilot Plant, EPA No. NM4890139088-TSDF, the New Mexico Environment Department

Programmatic and technical checklists were developed to evaluate activities associated with the current revisions of the following documents:

- *AMWTP Certification Plan for INL Transuranic Waste,* MP-TRUW-8.1
- *AMWTP Quality Assurance Project Plan*, MP-TRUW-8.2
- Related AMWTP QA and technical implementing procedures

2.2 Purpose

Audit A-15-01 was conducted to assess AMWTP's waste characterization activities related to the certification of CH SCG S3000 homogeneous solids and CH SCG S5000 debris waste for compliance to the HWFP WAP requirements. The audit team also evaluated specific QA elements relating to WAP requirements.

3.0 AUDIT TEAM AND OBSERVERS

AUDITORS/TECHNICAL SPECIALISTS

Martin Navarrete	Management Representative, CBFO Quality Assurance Division
Dennis Miehls	QA Representative, CBFO
Cindi Castillo	Audit Team Leader, CBFO Technical Assistance Contractor (CTAC)
Tammy Ackman	Auditor, CTAC
Randall Allen	Auditor, CTAC
Harley Kirschenmann	Auditor, CTAC
Katie Martin	Auditor, CTAC
Berry Pace	Auditor, CTAC
Charlie Riggs	Auditor, CTAC
Jim Schuetz	Auditor, CTAC
Roger Vawter	Auditor, CTAC
Dick Blauvelt	Technical Specialist, CTAC
Paul Gomez	Technical Specialist, CTAC
Porf Martinez	Technical Specialist, CTAC

Priscilla Martinez	Technical Specialist, CTAC
B.J. Verret	Technical Specialist, CTAC

OBSERVERS

Kenneth Lickliter	CBFO TRU Sites and Transportation Division
Steve Holmes	New Mexico Environment Department (NMED)
Ines Triay	NMED
Adrian Bergman	DOE Idaho (DOE-ID)
Bob Blyth	DOE-ID
Pete Johansen	Idaho Department of Environmental Quality (IDEQ)
Bruce LaRue	IDEQ

4.0 AUDIT PARTICIPANTS

The individuals at the INL and AMWTP EDF who were contacted during the audit are identified in Attachment 1. A pre-audit meeting was held at the Engineering Research Office Building (EROB), Conference Room 159, in Idaho Falls, Idaho, on October 7, 2014. Daily meetings were held with AMWTP management and staff to discuss the previous day's issues and deficiencies. The audit was concluded with a post-audit meeting held at the EDF, Building 259, Room 116, in Idaho Falls, Idaho, on October 9, 2014.

5.0 SUMMARY OF AUDIT RESULTS

5.1 Program Adequacy, Implementation, and Effectiveness

This audit was performed to assess the ability of AMWTP to characterize CH SCG S3000 homogeneous solids and CH SCG S5000 debris waste to the requirements specified in the CBFO QAPD and the HWFP WAP. The WAP-related characterization methods assessed were AK, RTR, and VE. Other WAP-related activities evaluated were project-level data V&V, data quality objective (DQO) reconciliation, preparation of waste stream profile forms (WSPFs), WWIS/WDS data entry, personnel qualification and training, nonconformances, and records.

The audit team concluded that the applicable AMWTP TRU waste characterization activities, as described in the associated AMWTP implementing procedures, are satisfactory in meeting the WAP requirements. Attachment 2 is a list of personnel contacted during the audit by subject area. Attachment 3 contains the objective evidence compiled during the audit (provided in boxes). Attachment 4 is the table of audited documents. Attachment 5 is a list of processes and equipment evaluated during the audit. Attachment 6 is the procedure revision matrix. Details of audit activities are described below.

5.2 General Activities

5.2.1 Results of Previous Audits

No CBFO corrective action reports (CARs) were issued as a result of the A-14-01 recertification audit; therefore, the need to conduct follow-up evaluations was deemed unnecessary.

5.2.2 Changes in Programs or Operations

There have been no deactivated AMWTP procedures since the previous audit.

5.2.3 New Programs or Activities Being Implemented

No new programs or new activities have been implemented since the previous audit.

5.2.4 Changes in Key Personnel

The following personnel change occurred since the previous audit:

- The designated Site Project Manager (SPM) has changed from Eric Schweinsberg to Gina Tedford

No evidence was observed suggesting that the changes in key personnel had a negative impact on the program.

5.3 WAP-related Quality Assurance Activities

The audit team evaluated the applicable QA elements for personnel qualification and training, nonconformances, and records for compliance with requirements in the HWFP WAP. The evaluation results for each area audited are described below.

5.3.1 Personnel Qualification and Training

The audit team verified that the AMWTP met the requirements of CBFO QAPD Section 1.2, Personnel Qualification and Training, as well as WAP-related requirements from Table C6-1. The following implementing procedures were reviewed to determine the degree to which the procedures adequately address upper-tier requirements: MP-RTQP-14.4, Rev. 22, *Personnel Qualification and Certification*; MP-RTQP-14.6, Rev. 10, *Job Analysis;* MP-RTQP-14.16, Rev. 8, *Training Program Evaluation*; MP-RTQP-14.19, Rev. 9, *Training Records Administration*; MP-Q&SI-5.8, Rev. 8, *Qualifying Supply Chain Inspectors, Auditors, Lead Auditors, and Technical Specialists*; and LST-RTQP-03-IM, Rev. 1, *WIPP Training Requirements Implementation Matrix*. The results of the review confirmed that the procedures adequately address upper-tier requirements.

The audit team conducted interviews with responsible personnel in the AMWTP Training Department. Personnel training records associated with VE, RTR, AK, and site project management were examined to verify implementation of associated requirements and to verify personnel performing characterization activities were appropriately trained and qualified.

The records review provided evidence of AMWTP training program implementation. The audit team evaluated AMWTP qualification/requalification packages (qualification cards) and related individual training files for the various AMWTP positions through job analysis documentation and employee training history documentation from the training database (TRAIN system). The audit team reviewed qualification packages for RTR and VE operators,

VE experts (VEEs), AK experts (AKEs), and SPMs. Documentation of waste stream training required for RTR and VE operators was evaluated, along with RTR operator test drum (capability demonstration) documentation; eye examination forms; and management assessment reports of the AMWTP training program.

No WAP deficiencies regarding personnel qualification and training were identified. The procedures reviewed and objective evidence assembled and evaluated during the audit provided evidence that the applicable requirements for personnel qualification and training are adequately established for compliance with upper-tier requirements, satisfactory in the implementation of these requirements, and effective in achieving the desired results.

5.3.2 Nonconformances

The audit team verified that the AMWTP complies with the requirements of CBFO QAPD Section 1.3, Quality Improvement, as well as WAP-related requirements from Table C6-1. The audit team conducted interviews with personnel of the AMWTP QA program. The following implementing procedures were reviewed to determine the degree to which the procedures adequately address upper-tier requirements: MP-Q&SI-5.1, Rev. 9, *Investigation and Root Cause Analysis*; MP-Q&SI-5.3, Rev. 13, *Corrective Action*; and MP-Q&SI-5.4, Rev. 21, *Identification of Nonconforming Conditions*. The results of the review confirmed that the procedures adequately address upper-tier requirements.

Randomly selected nonconformance reports (NCRs) were evaluated to ensure that conditions adverse to quality were appropriately identified, documented, dispositioned, investigated, and that root cause analysis was performed where mandated, resolved, and tracked through closure. The selected NCRs were reviewed, including verifications, to ensure that the AMWTP was appropriately documenting and reporting WAP-related nonconformances (identified at the site project management level) to CBFO, as required. The review indicated the AMWTP is documenting and reporting WAP-related nonconformances as required.

During previous CBFO Audit A-14-01, AMWTP had self-identified three occurrences where WAP-related NCRs had not been reported within the required seven days. This involved NCRs 74039, 74582, and 75766. The condition was documented and reported using AMWTP CAR 80832. During the audit, the audit team verified sustained corrective actions associated with AMWTP CAR 80832 and determined that they are effective. Six WAP-related NCRs were identified for the past year, and all were reported within the required time frame.

No WAP deficiencies regarding nonconformances were identified. The procedures reviewed and objective evidence assembled and evaluated during the audit provided evidence that the applicable requirements for quality improvement are adequately established for compliance with upper-tier requirements, satisfactory in the implementation of these requirements, and effective in achieving the desired results.

5.3.3 Records

The audit team verified that the AMWTP complies with the requirements of CBFO QAPD Section 1.5, Records, as well as WAP-related requirements from Table C6-1. The audit

team evaluated the adequacy of AMWTP procedure MP-DOCS-18.2, Rev. 17, *Records Management*, with respect to the requirements of the CBFO QAPD and determined that the procedure contains adequate flow-down of upper-tier requirements. The results of the review confirmed that the procedure adequately addresses upper-tier requirements.

The audit team interviewed records management personnel and observed activities in the records center to determine AMWTP record storage methods and records practices were in compliance with procedural and CBFO QAPD requirements. Activities evaluated by the audit team included custodian training, records receipt, verification, validation, submittal, and records maintenance.

Lifetime and non-permanent WIPP records are categorized and classified in Appendix B (of procedure MP-DOCS-18.2), *Record Categories, Classification, Disposition, and Retention Matrix,* also referred to as the Records Inventory and Disposition Schedule (RIDS). The audit team verified that procedures are established to ensure that the generator/storage site maintains records that are designated as lifetime records for the life of the waste characterization program plus six years, or that the records have been transferred to the WIPP Records Archive (WRA). The team also verified that the generator/storage site maintains records that are designated as non-permanent records for ten years from the date of record generation, and then dispositions them according to the approved RIDS or transfers them to the WRA.

No WAP deficiencies regarding records were identified. The procedures reviewed and objective evidence assembled and evaluated during the audit provided evidence that the applicable requirements for records are adequately established for compliance with upper-tier requirements, satisfactory in the implementation of these requirements, and effective in achieving the desired results.

5.4 Technical Activities

Each technical area evaluated is discussed in detail in the following sections. The methods used to select objective evidence are discussed, the objective evidence used to assess compliance with the HWFP is cited briefly, and the results of the evaluation are provided.

5.4.1 Table C6-1, WAP Checklist

The audit was performed to assess the AMWTP's ability to manage and perform TRU waste characterization and certification activities for CH SCG S3000 homogeneous solids and CH SCG S5000 debris waste. The C6-1 WAP checklist addresses general program requirements from an overall management perspective. The general requirements checklist addresses both technical requirements and specific WAP-related QA programmatic requirements that, when collectively implemented, ensure effective overall management of TRU waste characterization and certification activities. Requirements are integrated into controlled documents to ensure the waste characterization strategy, as defined in the WAP, is accomplished and documented in accordance with controlled processes and procedures.

Project Level Validation & Verification

Technical activities evaluated, including both characterization and certification activities, consisted of data-generation and project-level data V&V, AK, RTR, VE, and preparation of WSPFs for CH SCG S3000 homogeneous solids and CH SCG S5000 debris waste. Objective evidence was selected and reviewed to evaluate the implementation of the associated characterization activities. Batch data reports (BDRs) and personnel training documentation were included in the evaluation. The audit included direct observation of actual waste characterization activities. Each characterization process involves:

- Collecting raw data
- Collecting quality assurance/quality control samples or information
- Reducing the data to a useable format, including a standard report
- Review of the report by the data generation facility and the site project office
- Comparing the data against program DQOs
- Reporting the final waste characterization information to WIPP

The flow of data from the point of generation to inclusion in the WSPF for each characterization technique was reviewed to ensure that all applicable requirements were captured in the site operating procedures. Specific procedures audited and the objective evidence reviewed are described in the following sections.

During the audit, AMWTP demonstrated compliance with the waste characterization requirements of the HWFP WAP through documentation and by performing characterization activities.

Objective evidence was reviewed to ensure project-level activities were adequately performed to support waste characterization. The audit team reviewed AMWTP procedures MP-TRUW-8.14, Rev. 15, *Preparation of Waste Stream Profile Forms;* MP-TRUW-8.8, Rev. 39, *Level I Data Validation*; and MP-TRUW-8.9, Rev. 26, *Level II Data Validation,* to determine the degree to which the procedures adequately address HWFP WAP requirements. The results of the review confirmed that the procedures adequately address HWFP WAP requirements.

BDRs were evaluated based on project-level requirements for RTR and VE for CH SCG S3000 homogeneous solids and CH SCG S5000 debris waste. The project-level data V&V process was evaluated by reviewing the following BDRs:

Real-time Radiography (RTR)

RTR13-00242	RTR13-00305	RTR14-00005	RTR14-00086

Visual Examination (VE)

VEB13-00526	VEB14-00003	VEB14-00162	VEB14-00254
VNC14-00022			

Procedures and objective evidence were reviewed to ensure that AMWTP adequately performs data reconciliation and properly prepares WSPFs. The audit team reviewed the CH SCG S3000 homogeneous solids and CH SCG S5000 debris WSPF/Characterization

Information Summary for waste streams BN004 special setups waste and BN510.3 supercompacted debris waste. The results of the review indicate that AMWTP is completing WSPFs in accordance with applicable requirements.

No WAP deficiencies regarding project-level activities or preparation of WSPFs were identified during the audit. Overall, the procedures reviewed and objective evidence assembled and evaluated during the audit provided evidence that the requirements for project-level V&V and WSPF preparation are adequately established for compliance with HWFP WAP requirements, satisfactory in the implementation of these requirements, and effective in achieving the desired results.

WWIS/WDS

The audit team conducted interviews with responsible personnel and reviewed AMWTP implementing procedure MP-TRUW-8.5, Rev. 29, *TRU Waste Certification*, relative to WWIS/WDS data entry, to determine the degree to which the procedure adequately addresses HWFP WAP WWIS/WDS requirements. The results of the review confirmed that the procedure adequately addresses HWFP WAP requirements.

The audit team reviewed documentation of WDS access requests and requests for removal from WDS access for AMWTP waste certification officials (WCOs). The audit team determined that appropriate personnel have been granted access to WDS and are adequately trained in WWIS/WDS operations. AMWTP WCO personnel receive WWIS/WDS updates distributed by WDS database administrators. Access control to WDS applications is established using AMWTP user identification and passwords for network/server access and WDS assigned access user names and passwords.

The audit team observed the data entry and uploading processes using the AMWTP Waste Tracking System (WTS) *Waste Container Data Entry Form* and the WTS *Offsite Shipping Module*. Selected documentation packages were reviewed to provide objective evidence of data entry into the AMWTP WTS certification module. The audit team determined that WCOs properly manage data entry into the AMWTP WTS characterization and certification modules and promote data electronically to the WWIS/WDS. Samples of documentation packages were reviewed to provide objective evidence of data entry into AMWTP WTS modules and extraction to the WWIS/WDS certification modules.

No WAP deficiencies regarding WWIS/WDS were identified during the audit. The procedure reviewed and objective evidence assembled and evaluated during the audit provided evidence that the applicable requirements for WWIS/WDS are adequately established for compliance with HWFP WAP requirements, satisfactory in the implementation of these requirements, and effective in achieving the desired results.

5.4.2 Table C6-2, Acceptable Knowledge Checklist

The audit team evaluated the AK process for characterizing CH SCG S3000 homogeneous solids and CH SCG S5000 debris wastes. The audit team used the WAP C6 checklists, primarily checklist C6-2, as a guide for demonstration of HWFP compliance. Two waste streams were examined during the audit. The first waste stream examined was the S5000

mixed waste debris stream BN510.3 (RPT-TRUW-83, Rev. 8, *Acceptable Knowledge Summary for Supercompacted Debris Waste*), and the second was an S3000 mixed waste solids stream generated at the Rocky Flats Plant designated as BN004 (RPT-TRUW-59, Rev. 4, *Acceptable Knowledge Summary for Special Setups Waste*).

The audit team evaluated the following AMWTP implementing procedures: MP-TRUW-8.1, Rev. 24, *Certification Plan for INL Transuranic Waste*; MP-TRUW-8.2, Rev. 17, *Quality Assurance Project Plan*; MP-TRUW-8.11, Rev. 25, *Data Reconciliation*; MP-TRUW-8.13, Rev. 25, *Collection, Review, and Management of Acceptable Knowledge Documentation*; and MP-TRUW-8.14, Rev. 15, *Preparation of Waste Stream Profile Forms,* relative to AK activities, to determine the degree to which procedures adequately address upper-tier requirements. The results of the review confirmed that the procedures adequately address HWFP WAP requirements.

Numerous documents from the AK record that demonstrate adherence to the applicable requirements were reviewed and compiled as objective evidence, including the relevant AK summary reports, WSPFs and attachments with applicable change notices, AK source document summaries, and BDRs from RTR and VE augmenting the AK record. Data reconciliation packages that compare the results of the characterization testing with the AK record were also compiled and examined. In addition, the audit team examined AK discrepancy resolution documentation for discrepancies in the AK record and the resolution of discrepancies identified during characterization processes. The audit team reviewed NCRs dealing with the identification and disposition of prohibited items.

In addition to the respective AK summary reports mentioned above, the following supporting documents were utilized/reviewed by the audit team: RPT-TRUW-06, Rev. 16, *Acceptable Knowledge Document for AMWTP Waste*; RPT-TRUW-12, Rev. 23, *AMWTP Waste Stream Designations;* RPT-TRUW-05, Rev. 36, *Waste Matrix Code Reference Manual*; and RPT-TRUW-07, Rev. 20, *Determination of Radioisotopic Content in TRU Waste Based on Acceptable Knowledge*.

Among the AK source documents reviewed were AK summaries that supported the assignment of hazardous waste numbers to the supercompacted waste streams BN510.2 and BN510.3. The waste stream BN510.3 came from the addition of debris feedstock to the supercompaction process from the pre-1980 INL exhumed Subsurface Disposal Area waste.

A total of five drums were tracked for the WAP-required traceability exercise including three drums from the BN510.3 waste stream and two drums from waste stream BN004. The audit team reviewed requisite RTR and VE BDRs and traceability screenshot data from the active container database, along with container input forms where applicable.

The team examined training records for five AKEs and an SPM associated with the AK process. The handling of NCRs and AK discrepancy reports, including the segregation of non-conforming items/containers, were reviewed. In addition, the handling of AK records was examined for compliance with preparation, legibility, accuracy, review, approval, and maintenance. The distribution, control, and use of appropriate AK procedures were also reviewed.

The audit team examined the latest WAP-compliant AK Accuracy Report and the most recent internal surveillance relevant to AK (No. 74798 completed September 13, 2013), and reviewed the plan and checklist for Audit IA-14-002, which has been completed, but the report had not been issued.

No WAP deficiencies regarding AK were identified during the audit. The procedure reviews, field observations, and document reviews provided evidence that the applicable requirements for characterizing CH SCG S3000 homogeneous solids and CH SCG S5000 debris waste using the AK process are adequately established for compliance with upper-tier requirements, satisfactory in the implementation of these requirements, and effective in achieving the desired results.

5.4.3 Table C6-3, Radiography Checklist

The audit team evaluated the adequacy, implementation, and effectiveness of AMWTP characterization and certification of CH SCG S3000 homogeneous solids waste and SCG S5000 debris waste using the RTR characterization process.

The audit team reviewed AMWTP procedures MP-TRUW-8.8, Rev. 39, *Level I Data Validation*, and INST-OI-12, Rev. 55, *Real-Time Radiography Examinations (Certification Scans)*, relative to RTR activities, to determine the degree to which procedures adequately address upper-tier requirements. The results of the review confirmed that the procedures adequately address HWFP WAP requirements.

The audit team evaluated RTR operator required test and training drum audio/video media for two operators. Records of RTR operators training and qualification, including test and training drum documentation, were examined. The audit team verified that RTR operators were appropriately trained and qualified for compliance with training requirements.

The audit team evaluated RTR operations in buildings WMF-634 and WMF-610. RTR operations were observed for the certification scans of containers 10528698 (SCG S3000) and 10368559 (SCG S5000) using RTR Unit 101 and RTR Unit 106, respectively. The audit team also examined RTR operational logbook entries in the electronic login system (eSOMS) for both units and verified required components for the RTR units. The audit team examined RTR Unit 1001, but this unit was not being utilized during the audit.

The audit team examined the following RTR BDRs:

RTR13-00241	RTR13-00280	RTR13-00324	RTR14-00018
RTR14-00037	RTR14-00233		

No WAP deficiencies regarding RTR were identified during the audit. The procedure reviews, field observations, and document reviews provided evidence that the applicable requirements for characterizing CH SCG S3000 homogeneous solids and CH SCG S5000 debris waste using the RTR process are adequately established for compliance with upper-tier requirements, satisfactory in the implementation of these requirements, and effective in achieving the desired results.

5.4.4 Table C6-4, Visual Examination Checklist

The audit team evaluated the adequacy, implementation, and effectiveness of the AMWTP VE characterization process for SCG S5000 debris waste. The VE process for characterizing SCG S3000 homogeneous solids waste, implemented for the South Boxline in the waste treatment facility, Building WMF-676, is no longer performed. Procedure INST-FOI-022, *Visual Examination of S3000 Waste in the Facility*, was deactivated on February 26, 2012.

The audit team reviewed procedures MP-TRUW-8.8, Rev. 39, *Level I Data Validation*; INST-OI-34, Rev. 28, *Non-Facility Visual Examination Operations;* INST-FOI-17, Rev. 27, *Facility Visual Examination Operations*; INST-FOI-20, Rev. 42 FC-1, *Supercompactor and Post-Compaction Operations*; and LST-RTQP-03-IM, Rev. 1, *WIPP Training Requirements Implementation Matrix*, relative to VE activities, to determine the degree to which procedures adequately address upper-tier requirements. The results of the review confirmed that the procedures adequately address WAP requirements.

AMWTP uses the two-operator VE characterization method in which VE is performed by two qualified operators who examine the waste and place it into containers.

The audit team toured and evaluated VE operations in the North Boxline facility located in Building WMF-676, Room 231. The audit team observed VE operations on source container 10252365 from Item Description Code (IDC) AE100 into a newly-generated 55-gallon waste container (silver) number 10530745. The newly-generated waste containers are then assigned IDC 508, indicating that the waste was generated in WMF-676, directly related to operations from processing containers assigned IDCs listed in approved RPT-TRUW-83, Rev. 8, *Acceptable Knowledge Summary for Supercompacted Debris Waste*. The newly-generated waste containers, assigned IDC 508 and referred to as "silvers," are sent to the supercompactor where they are compacted and over-packed into 100-gallon drums. The audit team verified that the current revision of RPT-TRUW-05, Rev. 36, *Waste Matrix Code Reference Manual*, was used to verify the waste description for IDC AE100 and IDC 508.

Interviews with VE operators were conducted and electronic VE operational logbook entries for the North Boxline were verified to be correctly entered and subsequently reviewed by the facility shift supervisor, as required.

The audit team examined the following VE BDRs:

VNC13-00170	VEB13-00518	VNC14-00022	VEB14-00026
VEB14-00054	VEB14-00079	VEB14-00117	VEB14-00146
VEB14-00180	VEB14-00212	VEB14-00254	

The audit team examined training records for VE operators, Independent Technical Reviewers (ITRs), and VEEs, and confirmed the appointment of AMWTP VEEs. The audit team verified that VE operators, ITRs, and VEEs were appropriately trained and qualified as required.

No WAP deficiencies regarding VE were identified during the audit. The procedure reviews, field observations, and document reviews provided evidence that the applicable requirements for characterizing SCG S5000 debris waste using the VE process are adequately established for compliance with upper-tier requirements, satisfactory in the implementation of these requirements, and effective in achieving the desired results.

6.0 CORRECTIVE ACTIONS and OBSERVATIONS

6.1 Corrective Action Reports

During the audit, the audit team may identify conditions adverse to quality (CAQs), as described below, and document such conditions on CARs.

> Condition Adverse to Quality (CAQ) – An all-inclusive term used in reference to any of the following: failures, malfunctions, deficiencies, defective items, nonconformances, and technical inadequacies.
>
> Significant Condition Adverse to Quality – A condition which, if uncorrected, could have a serious effect on safety, operability, waste confinement, TRU waste site certification, regulatory compliance demonstration, or the effective implementation of the QA program.

No WAP deficiencies necessitating a CAR were identified during the audit.

6.2 Deficiencies Corrected During the Audit

During the audit, the audit team may identify CAQs. The audit team members and the Audit Team Leader (ATL) evaluate the CAQs to determine if they are significant. Once a determination is made that the CAQ is not significant, the audit team member, in conjunction with the ATL, determines if the CAQ is an isolated case requiring only remedial action and therefore can be corrected during the audit (CDA). Deficiencies that can be classified as CDA are those isolated deficiencies that do not require a root cause determination or actions to preclude recurrence, and those for which correction of the deficiency can be verified prior to the end of the audit. Examples include one or two minor changes required to correct a procedure (isolated), one or two forms not signed or not dated (isolated), or one or two individuals have not completed a reading assignment.

Upon determination that the CAQ is isolated, the audit team member, in conjunction with the ATL, evaluates/verifies any objective evidence/actions submitted or taken by the audited organization and determines if the condition was corrected in an acceptable manner. Once it has been determined that the CAQ has been corrected, the ATL categorizes the condition as CDA.

No WAP deficiencies, requiring remedial action only, were identified and corrected during the audit.

6.3 Observations

During the audit, the audit team may identify potential problems that should be communicated to the audited organization. The audit team members, in conjunction with the ATL, evaluate these conditions and classify them as Observations using the following definition:

Observation – A condition that, if not controlled, could result in a CAQ.

Once a determination is made, the audit team member, in conjunction with the ATL, categorizes the condition appropriately.

No WAP-related Observations were identified during the audit.

7.0 LIST OF ATTACHMENTS

Attachment 1: Personnel Contacted During the Audit
Attachment 2: Personnel Contacted During the Audit by Subject Area
Attachment 3: Objective Evidence Compiled During the Audit (provided in boxes)
Attachment 4: Table of Audited Documents
Attachment 5: List of Processes and Equipment Evaluated During the Audit
Attachment 6: Procedure Revision Matrix

PERSONNEL CONTACTED DURING THE AUDIT				
NAME	**ORG/TITLE**	**PRE-AUDIT MEETING**	**CONTACTED DURING AUDIT**	**POST-AUDIT MEETING**
Jade Anderson	ITG Software Engineering Manager	X	X	
Dan Arrenholz	ITG AK Expert		X	X
Mike Auble	ITG Production Planning Manager		X	
Kevin Bake	ITG Systems Engineer	X	X	
Adrian Bergman	DOE-ID Observer	X	X	X
Scott Bjorn	ITG Operations Manager		X	
Delisa Blattner	ITG Document Technical Publications Specialist	X	X	
Bob Blyth	DOE-ID Observer	X	X	X
Bob Boucher	ITG Systems Engineer	X	X	
Lisa Boucher	ITG CMMS Admin.	X		
George Byram	ITG TRU Programs Manager	X	X	X
Steve Carpenter	ITG AK Expert	X	X	
Darin Cook	ITG Ops. Tech.		X	
Doug Dineen	ITG Systems Engineer		X	
Rebecca Escott	ITG M&TE Tech.	X	X	
Shannon Flores	ITG Packaging & Shipping Manager		X	
Todd Goldberg	ITG Training Manager	X	X	X
Ronald Grise	ITG VE Expert	X	X	X
David Haar	ITG Waste Programs Manager	X	X	X
Rod Harrison	ITG Procurement Manager	X	X	
Steve Holmes	NMED Observer	X	X	X
Rachelle Hubler	ITG Transportation Manager		X	
Nolan Jacobs	ITG VE Operator		X	

PERSONNEL CONTACTED DURING THE AUDIT				
NAME	**ORG/TITLE**	**PRE-AUDIT MEETING**	**CONTACTED DURING AUDIT**	**POST-AUDIT MEETING**
Pete Johansen	Idaho DEQ Observer	X	X	
Lee Roy Jones	ITG Retrieval Lead		X	
Shawn Jordan	ITG RTR Operator		X	
Mike Keeton	ITG QA Engineer		X	
Adam Kennedy	ITG Production Planning SME		X	
Frank Kuck	ITG Ops. Tech.		X	
Gene Kurtz	ITG Retrieval		X	
Bruce LaRue	Idaho DEQ Observer	X	X	X
Denise Lee	ITG RTR ITR	X	X	X
Kenneth Lickliter	CBFO NTP Observer	X	X	X
Dennis Miehls	CBFO QA Rep.	X	X	X
Randall Morris	ITG AK Expert	X	X	X
Angie Morse	ITG QA Manager	X	X	X
Trent Olaveson	ITG PAIT/ICS	X		X
Jerry Patterson	ITG/ICS Team Lead	X	X	
Shirley Perez	ITG VE Operator		X	
Ben Roberts	DOE-ID, AMWTP Operations Activity Manager			X
Lyle Ryman	ITG QA Engineer	X	X	X
Eric Schweinsberg	ITG TRU Programs SPM	X	X	
Michelle Sharp	ITG QA Engineer	X	X	X
Jim Simonds	ITG Contracts & Logistics Manager	X		X
Brittany Skaar	ITG Production Coordinator		X	
Mark Sorenson	ITG RTR ITR	X	X	X
Cameron Stamos	ITG Sr. Training Coordinator	X	X	X
Chuck Stepzinski	ITG Characterization & Storage Manager		X	
Matthew Storms	ITG WCO		X	

PERSONNEL CONTACTED DURING THE AUDIT				
NAME	**ORG/TITLE**	**PRE-AUDIT MEETING**	**CONTACTED DURING AUDIT**	**POST-AUDIT MEETING**
Paul Swassing	ITG Ops. Tech.		X	
Steve Tallman	ITG RTR SME	X	X	X
Gina Tedford	ITG SPM Audit Lead	X	X	X
Cindy Tiegs	ITG RTR Operator		X	
Matt Thompson	WTS Program Manager	X	X	X
Ron Todd	ITG Engineering Manager	X	X	
Ines Triay	NMED Observer	X	X	
Steve Turner	ITG Systems Engineer		X	
LJ Walker	ITG VE Expert	X	X	X
Brian Warner	ITG Characterization & Storage Lead		X	
Jerry Wells	DOE-ID, AMWTP Deputy Operations Activity Manager	X		X
Stormie Winterbottom	ITG WCO		X	
Jack Zimmerman	DOE-ID, Deputy Manager Idaho Cleanup Project			X

PERSONNEL CONTACTED DURING THE AUDIT BY SUBJECT AREA

Personnel Qualification and Training	Todd Goldberg Cameron Stamos
Control of Nonconforming Items	Mike Keeton Lyle Ryman
Records	Delisa Blattner Angie Morse Michelle Sharp
WIPP Waste Information System (WWIS Data Entry)	Jade Anderson Jerry Patterson Matthew Storms Matt Thompson Stormie Winterbottom
Waste Certification/Project Level Data V&V	George Byram Gina Tedford
Acceptable Knowledge	Dan Arrenholz Steve Carpenter Randall Morris Gina Tedford
Real-time Radiography	Shawn Jordan Denise Lee Mark Sorenson Steve Tallman Cindy Tiegs
Visual Examination	Ron Grise Nolan Jacobs Shirley Perez LJ Walker

Objective Evidence

The objective evidence supporting Audit A-15-01 is included in the box(es) submitted with this report. A "Content Map" describing the location (using color coding) and identity of all required objective evidence supporting the performance of the audit is included in the box(es).

Table C6-1 Waste Analysis Plan (WAP) Checklist
AMWTP Recertification Audit October 7-9, 2014

(This page intentionally blank)

Waste Analysis Plan (WAP) General Checklist for use at DOE's Generator/Storage Sites

	WAP Requirement[1] AMWTP Audit A-15-01 Table C6-1 Waste Analysis Plan (WAP) Checklist [1]	Procedure Documented		Example of Implementation/Objective Evidence, as applicable		Comment (e.g., any change in procedure since last audit, etc.)
		Location	Adequate? Y/N (Why?)	Item Reviewed	Adequate? Y/N	
	WASTE STREAM IDENTIFICATION					
1	Does the generator/storage site define "waste stream" as waste materials that have common physical form, that contain similar hazardous constituents, and that are generated from a single process or activity? (Attachment C Section C-0a)	MP-TRUW-8.13 S. 3.3.5 (Note above) & 4.0	Y	AK Summary for Supercompacted Debris Waste (BN510.3), RPT-TRUW-83, Rev. 8 **(AK-1)** AK Summary for Special Setups Waste (BN004) RPT-TRUW-59, Rev. 4 **(AK-2)**	Y	
2	Are procedures in place to ensure that the generator/storage site assigns one of the Summary Category Groups (S3000-homogeneous solids, S4000-soils/gravel, S5000-debris waste) to each waste stream? (Section C-1b)	MP-TRUW-8.13 Appendix B I.C.a MP-TRUW-8.14 S. 3.1.6	Y	AK Summary for Supercompacted Debris Waste (BN510.3), RPT-TRUW-83, Rev. 8, S. 1.2.7 **(AK-1)** AK Summary for Special Setups Waste (BN004) RPT-TRUW-59, Rev. 4, S 1.2.7 **(AK-2)** Waste Stream Profile Form and attachments for waste stream BN510.3 **(AK-3)** Waste Stream Profile Form and attachments for waste stream BN004 **(AK-4)**	Y	
3	Are procedures in place to ensure that the generator/storage site assigns Waste Matrix Code Groups (e.g., solidified inorganics, solidified organics, salt waste, soils, combustible waste, filters, graphite, heterogeneous debris waste, inorganic nonmetal waste, lead/cadmium metal, uncategorized metal) to each waste stream? (Section C-0a)	MP-TRUW- 8.13 Appendix B I.C.b MP-TRUW-8.14 S. 3.1.6	Y	AK Summary for Supercompacted Debris Waste (BN510.3), RPT-TRUW-83, Rev. 8, S. 1.2.8 **(AK-1)** AK Summary for Special Setups Waste (BN004) RPT-TRUW-59, Rev. 4, S. 1.2.8 **(AK-2)**	Y	

	WAP Requirement[1] AMWTP Audit A-15-01 Table C6-1 Waste Analysis Plan (WAP) Checklist [1]	Procedure Documented		Example of Implementation/Objective Evidence, as applicable		Comment (e.g., any change in procedure since last audit, etc.)
		Location	Adequate? Y/N (Why?)	Item Reviewed	Adequate? Y/N	
				Waste Stream Profile Form and attachments for waste stream BN510.3 **(AK-3)** Waste Stream Profile Form and attachments for waste stream BN004 **(AK-4)**		
4	Are procedures in place to ensure that the generator/storage site assigns a Waste Stream WIPP Identifier (ID) to each waste stream? (Section C3-6b(1))	MP-TRUW-8.14 S. 3.1.6	Y	Waste Stream Profile Form and attachments for waste stream BN510.3 **(AK-3)** Waste Stream Profile Form and attachments for waste stream BN004 **(AK-4)**	Y	
4a	Are procedures in place for generator/storage sites to submit an AK Sufficiency Determination (Determination Request) to the Permittees to meet all or part of the waste characterization requirements including: • All information specified in Permit Attachment C4, Section C4-3d • Identification of relevant hazardous constituents, and correctly identifies all toxicity characteristic and listed hazardous waste numbers • All hazardous waste number assignments must be substantiated by supporting data and, if not, whether this lack of substantiation compromises the interpretation • Resolution of data discrepancies between different AK sources must be technically correct and documented • The AK Summary includes all the identification of waste material parameter weights by percentage of the material in the waste stream, and determinations are technically correct • All prohibited items specified in the TSDF-WAC should be addressed, and conclusions drawn are technically adequate and substantiated by supporting information • If the AK record includes process control information specified in Permit Attachment C4, Section C4-3b, the information should include procedures, waste manifests, or other documentation demonstrating that the controls were adequate and sufficient. • The site must provide the supporting information necessary to substantiate technical conclusions within the Determination Request, and this information must be correctly interpreted. (Section C-0b, Section C4-3d)	MP-TRUW-8.13 S. 3.6	Y	N/A	N/A	The generator is not seeking an AK Sufficiency Determination for the waste streams that were audited.

	WAP Requirement[1] AMWTP Audit A-15-01 Table C6-1 Waste Analysis Plan (WAP) Checklist [1]	Procedure Documented		Example of Implementation/Objective Evidence, as applicable		Comment (e.g., any change in procedure since last audit, etc.)
		Location	Adequate? Y/N (Why?)	Item Reviewed	Adequate? Y/N	
4b	If a generator/storage site does not submit a Determination Request or if the Determination Request is not approved, are procedures in place for the generator/storage site to perform radiography or VE on 100% of the containers in a waste stream as specified in Permit Attachment C1? (Section C-0b)	MP-TRUW-8.2 S. C-0b MP-TRUW-8.9 S. 2.0 MP-TRUW-8.11 (All) MP-TRUW-8.13 S. 3.6	Y	RTR13-00242 RTR13-00305 RTR14-00005 RTR14-00086 **(GEN-1)** VEB13-00526 VEB14-00003 VEB14-00162 VEB14-00254 VNC14-00022 **(GEN-2)**	Y	No determination requests were sent to NMED since the previous audit.
4c	Are procedures in place to ensure that the generator/storage sites complete a Waste Stream Profile Form (WSPF) and Characterization Information Summary (CIS) as specified in Permit Attachment C3, Sections C3-6b(1) and C3-6b(2)? (Section C-0c)	MP-TRUW-8.14 S. 3.1	Y	Acceptable Knowledge Document Review Summary P609A, Rev. 7, BN004 Special Set-ups Waste Stream Profile Package with Waste Stream Profile Form BN004, Rev. 0 and Characterization Information Summary (CIS) and AK Source Document Review Summary P2002A Rev. 1, BN510.3 Waste Stream Profile Package for Super Compactor Debris Waste with CIS Lot 1 and AK Summary. **(GEN-3)**	Y	
6	Are procedures in place to ensure that the generator/storage site assigns EPA hazardous waste numbers associated with the waste? If so, do these assigned EPA hazardous waste numbers correspond to the permitted EPA hazardous waste numbers in Table C-5? Are there any assigned EPA hazardous waste numbers that are not permitted EPA hazardous waste numbers on the Table C-5? If so, did the generator/storage site reject the waste for shipment to and disposal at WIPP? Did the generator assign a state hazardous waste codes or numbers? If so, is it assigned to waste that is permitted at WIPP? (Section C-1b)	MP-TRUW-8.13 S. 3.5.2	Y	AK Summary for Supercompacted Debris Waste (BN510.3), RPT-TRUW-83, Rev. 8, S. 1.7, Table 3 **(AK-1)** AK Summary for Special Setups Waste (BN004) RPT-TRUW-59, Rev. 4, S. 1.6 **(AK-2)** AMWTP Waste Stream Designations, RPT-TRUW-12, Rev. 24, Appendix A **(AK-10)**	Y	

	WAP Requirement[1] AMWTP Audit A-15-01 Table C6-1 Waste Analysis Plan (WAP) Checklist [1]	Procedure Documented		Example of Implementation/Objective Evidence, as applicable		Comment (e.g., any change in procedure since last audit, etc.)
		Location	Adequate? Y/N (Why?)	Item Reviewed	Adequate? Y/N	
7	Are procedures in place to ensure that Summary Category Groups are defined as follows: S3000- Homogeneous solids are solid material, inorganic process residues, inorganic sludges, salt waste, and pyrochemical salt waste excluding soils, that do not meet NMED criteria for classification as debris and are at least 50 percent by volume homogeneous solids or comprise the majority of the waste stream S4000- Waste streams that are at least 50 percent by volume soil/gravel, or comprise the majority of the waste stream S5000- Waste streams that are at least 50 percent volume materials that meet the NMED criteria for debris, or comprise the majority matrix of materials. The criteria for debris are solid materials intended for disposal that exceed 2.36 inch particle size and is a manufactured object, plant or animal matter, or natural geologic material. Particles smaller than 2.36 inches in size may be considered debris if the debris is a manufactured object and if it is not a particle of S3000 or S4000 material. (Section C-0a)	MP-TRUW-8.13 S. 4.0	Y	AK Summary for Supercompacted Debris Waste (BN510.3), RPT-TRUW-83, Rev. 8, S. 1.2.7 **(AK-1)** AK Summary for Special Setups Waste (BN004) RPT-TRUW-59, Rev. 4, S. 1.2.7 **(AK-2)** Waste Stream Profile Form and attachments for waste stream BN510.3 **(AK-3)** Waste Stream Profile Form and attachments for waste stream BN004 **(AK-4)**	Y	

	WAP Requirement[1] AMWTP Audit A-15-01 Table C6-1 Waste Analysis Plan (WAP) Checklist [1]	Procedure Documented		Example of Implementation/Objective Evidence, as applicable		Comment (e.g., any change in procedure since last audit, etc.)
		Location	Adequate? Y/N (Why?)	Item Reviewed	Adequate? Y/N	
8	Does the generator/storage facility have procedures in place to ensure that the following waste characterization parameters will be obtained: • Determination whether TRU mixed waste streams comply with the applicable provisions of the TSDF-WAC • Determination whether TRU mixed wastes exhibit a hazardous characteristic per 20.4.1.200 NMAC (incorporating 40 CFR 261 Subpart C) • Determination whether TRU mixed wastes are listed per 20.4.1.200 NMAC (incorporating 40 CFR 261 Subpart D) • Estimation of waste material parameter weights (Section C-2)	Bullet 1: MP-TRUW-8.13 S. 3.3.7, 3.5.6 & 3.5.3 INST-FOI-17 (All) Bullets 2 & 3: MP-TRUW-8.13 S. 3.5.2 Bullet 4: MP-TRUW-8.13 S. 3.5.1.6 Appendix B I.M Bullets 1-4: MP-TRUW-8.9 S. 1.0, 3.1 & 3.2 MP-TRUW-8.13 S. 3.3.3, 3.3.7, 3.5.1.6, 3.5.2, 3.5.3 & 3.8	Y	Bullet 1: AK Summary for Supercompacted Debris Waste (BN510.3), RPT-TRUW-83, Rev. 8, S. 1.6 1.7.2.2, 1.7.2.3, 1.7.2.4 & 1.7.2.5.3 **(AK-1)** AK Summary for Special Setups Waste (BN004) RPT-TRUW-59, Rev. 4, S. 1.5, 1.6.2.1.1, 1.6.2.1.2, 1.6.2.1.3 & 1.6.2.3 **(AK-2)** NCRs for prohibited items **(AK-16)** Waste Matrix Code Reference Manual, RPT-TRUW-05, Rev. 36 **(AK-14)** VEB14-00098 **(AK-29)** VEB14-00099 **(AK-30)** VEB14-00100 **(AK-31)** Bullets 2&3: AK Summary for Supercompacted Debris Waste (BN510.3), RPT-TRUW-83, Rev. 8, S. 1.7, Table 3 **(AK-1)** AK Summary for Special Setups Waste (BN004) RPT-TRUW-59, Rev. 4, S. 1.6 **(AK-2)** AMWTP Waste Stream Designations RPT-TRUW-12, Rev. 24, Appendix A **(AK-10)**	Y	

	WAP Requirement[1] AMWTP Audit A-15-01 Table C6-1 Waste Analysis Plan (WAP) Checklist [1]	Procedure Documented		Example of Implementation/Objective Evidence, as applicable		Comment (e.g., any change in procedure since last audit, etc.)
		Location	Adequate? Y/N (Why?)	Item Reviewed	Adequate? Y/N	
				Bullet 4: AK Summary for Supercompacted Debris Waste (BN510.3), RPT-TRUW-83, Rev. 8, S. 1.4.5.1, Table 2 **(AK-1)** AK Summary for Special Setups Waste (BN004) RPT-TRUW-59, Rev. 4, S. 1.4.5, Table 1-3 **(AK-2)** Memos supporting waste material parameter evaluation for waste streams BN510.3 and BN004 **(AK-15)** RTR13-00242 RTR13-00305 RTR14-00005 RTR14-00086 **(GEN-1)** VEB13-00526 VEB14-00003 VEB14-00162 VEB14-00254 VNC14-00022 **(GEN-2)** Acceptable Knowledge Document Review Summary P609A, Rev. 7, BN004 Special Set-ups Waste Stream Profile Package with Waste Stream Profile Form BN004, Rev. 0 and Characterization Information Summary (CIS) and AK Source Document Review Summary P2002A Rev. 1, BN510.3 Waste Stream Profile Package for		

	WAP Requirement[1] AMWTP Audit A-15-01 Table C6-1 Waste Analysis Plan (WAP) Checklist [1]	Procedure Documented		Example of Implementation/Objective Evidence, as applicable		Comment (e.g., any change in procedure since last audit, etc.)
		Location	Adequate? Y/N (Why?)	Item Reviewed	Adequate? Y/N	
				Super Compactor Debris Waste with CIS Lot 1 and AK Summary. **(GEN-3)**		
9	Are procedures in place to ensure that waste streams identified to contain incompatible materials or materials incompatible with waste containers cannot be shipped unless treated to remove the incompatibility? (Section C-1c)	MP-TRUW- 8.13 S. 3.3.7 & 3.5.6 INST-FOI-17 (All) MP-Q&SI-5.4 (All)	Y	NCRs for prohibited items **(AK-16)** "Hold" Tag **(AK-17)** VEB14-00098 **(AK-29)** VEB14-00099 **(AK-30)** VEB14-00100 **(AK-31)** Database Electronic Hold on Container **(AK-18)**	Y	
10	Are procedures in place to ensure that the generator/storage site uses acceptable knowledge and, as necessary, radiography and visual examination analysis as specified in Table C-1? (Section C-3)	MP-TRUW-8.9 S. 3.1 & 3.2 MP-TRUW-8.13 S. 3.5 & 3.8 MP-TRUW-8.14 S. 3.0	Y	AK Summary for Supercompacted Debris Waste (BN510.3), RPT-TRUW-83, Rev. 8 **(AK-1)** AK Summary for Special Setups Waste (BN004) RPT-TRUW-59, Rev. 4 **(AK-2)** RTR14-00005 **(AK-23)** RTR14-00006 **(AK-24)** RTR14-00067 **(AK-25)** RTR13-00213 **(AK-26)** RTR13-00275 **(AK-27)** RTR03-00066 **(AK-28)** VEB14-00098 **(AK-29)** VEB14-00099 **(AK-30)** VEB14-00100 **(AK-31)** RTR13-00242 RTR13-00305 RTR14-00005 RTR14-00086 **(GEN-1)** VEB13-00526 VEB14-00003 VEB14-00162 VEB14-00254	Y	

	WAP Requirement[1] AMWTP Audit A-15-01 Table C6-1 Waste Analysis Plan (WAP) Checklist [1]	Procedure Documented		Example of Implementation/Objective Evidence, as applicable		Comment (e.g., any change in procedure since last audit, etc.)
		Location	Adequate? Y/N (Why?)	Item Reviewed	Adequate? Y/N	
				VNC14-00022 **(GEN-2)** Acceptable Knowledge Document Review Summary P609A, Rev. 7, BN004 Special Set-ups Waste Stream Profile Package with Waste Stream Profile Form BN004, Rev. 0 and Characterization Information Summary (CIS) and AK Source Document Review Summary P2002A Rev. 1, BN510.3 Waste Stream Profile Package for Super Compactor Debris Waste with CIS Lot 1 and AK Summary. **(GEN-3)**		
	UNACCEPTABLE WASTE					

12	Are procedures in place to ensure that the generator/storage site ensures, through administrative and operational procedures and characterization techniques, that waste containers do not include the following unacceptable waste:
	• liquid waste is not acceptable at WIPP. Liquid in the quantities delineated below is acceptable
	  • Observable liquid shall be no more than 1 percent by volume of the outermost container at the time of radiography or visual examination
	  • Internal containers with more than 60 milliliters or 3 percent by volume observable liquid, whichever is greater, are prohibited
	  • Containers with Hazardous Waste number U134 assigned shall have no observable liquid
	  • Overpacking the outermost container that was examined during radiography or visual examination or redistributing untreated liquid within the container shall not be used to meet the liquid volume limits
	• non-radionuclide pyrophoric materials
	• hazardous wastes not occurring as co-contaminants with TRU wastes
		MP-TRUW-8.9 S. 3.1
		
		MP-TRUW-8.11 S. 3.2
		
		MP-TRUW-8.13 S. 3.3.3, 3.3.7 & 3.5
		
		INST-FOI-17 (All)
		
		INST-OI-12 (All)
			Y	RTR13-00242
				RTR13-00305
				RTR14-00005
				RTR14-00086
				(GEN-1)
				
				VEB13-00526
				VEB14-00003
				VEB14-00162
				VEB14-00254
				VNC14-00022
				(GEN-2)
				
				Acceptable Knowledge Document Review Summary P609A, Rev. 7, BN004 Special Set-ups Waste Stream Profile Package with Waste Stream Profile Form BN004, Rev. 0 and Characterization Information Summary
					Y	

	WAP Requirement[1] AMWTP Audit A-15-01 Table C6-1 Waste Analysis Plan (WAP) Checklist [1]	Procedure Documented		Example of Implementation/Objective Evidence, as applicable		Comment (e.g., any change in procedure since last audit, etc.)
		Location	Adequate? Y/N (Why?)	Item Reviewed	Adequate? Y/N	
	(non-mixed hazardous wastes) • wastes incompatible with backfill, seal and panel closures materials, container and packaging materials, shipping container materials, or other wastes • wastes containing explosives or compressed gases (continued below)			(CIS) and AK Source Document Review Summary P2002A Rev. 1, BN510.3 Waste Stream Profile Package for Super Compactor Debris Waste with CIS Lot 1 and AK Summary. **(GEN-3)**		
12a	• wastes with polychlorinated biphenyls (PCBs) not authorized under an EPA PCB waste disposal authorization • wastes exhibiting the characteristic of ignitability, corrosivity, or reactivity (EPA Hazardous Waste Numbers of D001, D002, or D003) • waste that has ever been managed as high-level waste and waste from tanks specified in Table C-4, unless specifically approved through a Class 3 permit modification • any waste container from a waste stream (or waste stream lot) which has not undergone either radiographic or visual examination of a statistically representative subpopulation of the wastes stream in each shipment pursuant to Permit Attachment C7 • any waste container from a waste stream which has not been preceded by an appropriate, certified Waste Stream Profile Form (see Section C-1d) (Section C-1c)	MP-TRUW-8.9 S. 3.1 MP-TRUW-8.11 S. 3.2 MP-TRUW-8.13 S. 3.3.3, 3.3.7 & 3.5 INST-FOI-17 (All) INST-OI-12 (All)	Y	RTR13-00242 RTR13-00305 RTR14-00005 RTR14-00086 **(GEN-1)** VEB13-00526 VEB14-00003 VEB14-00162 VEB14-00254 VNC14-00022 **(GEN-2)** Acceptable Knowledge Document Review Summary P609A, Rev. 7, BN004 Special Set-ups Waste Stream Profile Package with Waste Stream Profile Form BN004, Rev. 0 and Characterization Information Summary (CIS) and AK Source Document Review Summary P2002A Rev. 1, BN510.3 Waste Stream Profile Package for Super Compactor Debris Waste with CIS Lot 1 and AK Summary. **(GEN-3)**	Y	

	WAP Requirement[1] AMWTP Audit A-15-01 Table C6-1 Waste Analysis Plan (WAP) Checklist [1]	Procedure Documented		Example of Implementation/Objective Evidence, as applicable		Comment (e.g., any change in procedure since last audit, etc.)
		Location	Adequate? Y/N (Why?)	Item Reviewed	Adequate? Y/N	
	WASTE ACCEPTANCE CONTROL					
14	Are procedures in place to ensure that the generator/storage site uses a Waste Stream Profile Form (WSPF) which includes, at a minimum, the information indicated on the attached WSPF found in Figure C-1 and a Characterization Information Summary (CIS) prior to waste disposal at the WIPP? (Section C-1d)	MP-TRUW-8.14 (All)	Y	Acceptable Knowledge Document Review Summary P609A, Rev. 7, BN004 Special Set-ups Waste Stream Profile Package with Waste Stream Profile Form BN004, Rev. 0 and Characterization Information Summary (CIS) and AK Source Document Review Summary P2002A Rev. 1, BN510.3 Waste Stream Profile Package for Super Compactor Debris Waste with CIS Lot 1 and AK Summary. **(GEN-3)**	Y	
16	Are procedures in place to ensure that additional WSPFs are provided to WIPP and NMED for waste streams or portions of waste streams that are reclassified based upon waste characterization information? (Section C-1d)	MP-TRUW-8.14 S. 3.1	Y	Acceptable Knowledge Document Review Summary P609A, Rev. 7, BN004 Special Set-ups Waste Stream Profile Package with Waste Stream Profile Form BN004, Rev. 0 and Characterization Information Summary (CIS) and AK Source Document Review Summary P2002A Rev. 1, BN510.3 Waste Stream Profile Package for Super Compactor Debris Waste with CIS Lot 1 and AK Summary. **(GEN-3)**	Y	No waste was reclassified due to characterization activities.
16a	Are criteria in place to determine the specific circumstances under which a WSPF is revised versus when a new WSPF is required? (Section C-1d)	MP-TRUW-8.14 S. 3.3	Y	N/A	N/A	No WSPFs were revised with the addition of Hazardous Waste Numbers to the supercompacted waste stream; a new waste stream was designated.

	WAP Requirement[1] AMWTP Audit A-15-01 Table C6-1 Waste Analysis Plan (WAP) Checklist [1]	Procedure Documented		Example of Implementation/Objective Evidence, as applicable		Comment (e.g., any change in procedure since last audit, etc.)
		Location	Adequate? Y/N (Why?)	Item Reviewed	Adequate? Y/N	
	GENERAL CHARACTERIZATION REQUIREMENTS					
25	Are procedures in place to ensure that Acceptable Knowledge is used in waste characterization activities to delineate TRU mixed waste streams, to assess whether TRU mixed wastes comply with the TSDF-WAC, to assess whether TRU mixed waste exhibits a hazardous characteristic (20.4.1.200 NMAC, incorporating 40 CFR 261 Subpart C), and to assess whether TRU wastes are listed (20.4.1.200 NMAC, incorporating 40 CFR 261 Subpart D), and to estimate waste material parameter weights? (Section C-3a)	MP-TRUW-8.13 S. 3.3.5, 3.3.7, 3.5.1.6, 3.5.2, 3.5.3., 3.5.6, & Appendix B I.M INST-FOI-17 (All)	Y	AK Summary for Supercompacted Debris Waste (BN510.3), RPT-TRUW-83, Rev. 8, S. 1.2 **(AK-1)** AK Summary for Special Setups Waste (BN004) RPT-TRUW-59, Rev. 4, S. 1.2 **(AK-2)** AK Summary for Supercompacted Debris Waste (BN510.3), RPT-TRUW-83, Rev. 8, S. 1.6 1.7.2.2, 1.7.2.3, 1.7.2.4 & 1.7.2.5.3 **(AK-1)** AK Summary for Special Setups Waste (BN004) RPT-TRUW-59, Rev. 4, S. 1.5, 1.6.2.1.1, 1.6.2.1.2, 1.6.2.1.3 & 1.6.2.3 **(AK-2)** NCRs for prohibited items **(AK-16)** Waste Matrix Code Reference Manual, RPT-TRUW-05, Rev. 36 **(AK-14)** VEB14-00098 **(AK-29)** VEB14-00099 **(AK-30)** VEB14-00100 **(AK-31)** AK Summary for Supercompacted Debris Waste (BN510.3), RPT-TRUW-83, Rev. 8, S. 1.7, Table 3 **(AK-1)** AK Summary for Special Setups Waste (BN004) RPT-TRUW-59, Rev. 4, S. 1.6 **(AK-2)**	Y	

	WAP Requirement[1] AMWTP Audit A-15-01 Table C6-1 Waste Analysis Plan (WAP) Checklist [1]	Procedure Documented		Example of Implementation/Objective Evidence, as applicable		Comment (e.g., any change in procedure since last audit, etc.)
		Location	Adequate? Y/N (Why?)	Item Reviewed	Adequate? Y/N	
				AMWTP Waste Stream Designations RPT-TRUW-12, Rev. 24, Appendix A **(AK-10)** AK Summary for Supercompacted Debris Waste (BN510.3), RPT-TRUW-83, Rev. 8, S. 1.4.5.1, Table 2 **(AK-1)** AK Summary for Special Setups Waste (BN004) RPT-TRUW-59, Rev. 4, S. 1.4.5, Table 1-3 **(AK-2)** Memos supporting waste material parameter evaluation for waste streams BN510.3 and BN004 **(AK-15)**		
26	Are procedures in place to ensure that radiography and/or visual examination are used as necessary to: • Examine a waste container to determine the physical form • Identify observable liquid in excess of TSDF-WAC limits and containerized gases • Verify the physical form matches the waste stream description (Section C-3b)	INST-OI-12 (All) INST-FOI-17 S. 1.0 INST-OI-34 S. 1.0	Y	RTR BDRs: RTR13-00241 RTR13-00280 RTR13-00324 RTR14-00018 RTR14-00037 RTR14-00233 **(RTR-1)** VE BDRs: VNC13-00170 VEB13-00518 VNC14-00022 VEB14-00026 VEB14-00054 VEB14-00079 VEB14-00117 VEB14-00146 VEB14-00180 VEB14-00212 VEB14-00254 **(VE-1)**	Y	

	WAP Requirement[1] AMWTP Audit A-15-01 Table C6-1 Waste Analysis Plan (WAP) Checklist [1]	Procedure Documented		Example of Implementation/Objective Evidence, as applicable		Comment (e.g., any change in procedure since last audit, etc.)
		Location	Adequate? Y/N (Why?)	Item Reviewed	Adequate? Y/N	
28	Are procedures in place to ensure that the following characterization activities shall occur: • Acceptable Knowledge for all wastes, with testing as necessary to augment AK including; - Visual examination or radiography for all waste containers	MP-TRUW-8.9 S. 2.0 & 3.1.3 MP-TRUW-8.11 S. 3.2 MP-TRUW- 8.13 S. 3.5 & 3.8	Y	AK Summary for Supercompacted Debris Waste (BN510.3), RPT-TRUW-83, Rev. 8 **(AK-1)** AK Summary for Special Setups Waste (BN004) RPT-TRUW-59, Rev. 4 **(AK-2)** RTR14-00005 **(AK-23)** RTR14-00006 **(AK-24)** RTR14-00067 **(AK-25)** RTR13-00213 **(AK-26)** RTR13-00275 **(AK-27)** RTR03-00066 **(AK-28)** VEB14-00098 **(AK-29)** VEB14-00099 **(AK-30)** VEB14-00100 **(AK-31)** Data Reconciliation Reports for waste streams BN510.3 and BN004 **(AK-32)** RTR13-00242 RTR13-00305 RTR14-00005 RTR14-00086 **(GEN-1)** VEB13-00526 VEB14-00003 VEB14-00162 VEB14-00254 VNC14-00022 **(GEN-2)** Acceptable Knowledge Document Review Summary P609A, Rev. 7, BN004 Special Set-ups Waste Stream Profile Package with Waste Stream Profile Form BN004, Rev. 0 and	Y	

	WAP Requirement[1] AMWTP Audit A-15-01 Table C6-1 Waste Analysis Plan (WAP) Checklist [1]	Procedure Documented		Example of Implementation/Objective Evidence, as applicable		Comment (e.g., any change in procedure since last audit, etc.)
		Location	Adequate? Y/N (Why?)	Item Reviewed	Adequate? Y/N	
				Characterization Information Summary (CIS) and AK Source Document Review Summary P2002A Rev. 1, BN510.3 Waste Stream Profile Package for Super Compactor Debris Waste with CIS Lot 1 and AK Summary. **(GEN-3)**		
	DATA GENERATION, VERIFICATION, VALIDATION, DOCUMENTATION, AND QUALITY ASSURANCE					
30	Are procedures in place to ensure that the following Data Quality Objectives are met: • Use Acceptable Knowledge to delineate TRU mixed waste streams, assess whether TRU mixed wastes comply with the applicable requirements of the TSDF-WAC, assess whether TRU mixed wastes exhibit a hazardous characteristic, assess whether TRU mixed wastes are listed and to estimate waste material parameter weights • Use radiography or visual examination to verify the physical form of the waste matches its waste stream description as determined by AK and to verify the absence of prohibited items (Section C-4a(1))	MP-TRUW-8.11 S. 3.2 MP-TRUW-8.13 S. 3.3.5, 3.3.7, 3.5.1.6, 3.5.2, 3.5.3., 3.5.6, & Appendix B I.M INST-FOI-17 (All)	Y	AK Summary for Supercompacted Debris Waste (BN510.3), RPT-TRUW-83, Rev. 8, S. 1.2 **(AK-1)** AK Summary for Special Setups Waste (BN004) RPT-TRUW-59, Rev. 4, S. 1.2 **(AK-2)** AK Summary for Supercompacted Debris Waste (BN510.3), RPT-TRUW-83, Rev. 8, S. 1.6 1.7.2.2, 1.7.2.3, 1.7.2.4 & 1.7.2.5.3 **(AK-1)** AK Summary for Special Setups Waste (BN004) RPT-TRUW-59, Rev. 4, S. 1.5, 1.6.2.1.1, 1.6.2.1.2, 1.6.2.1.3 & 1.6.2.3 **(AK-2)** NCRs for prohibited items **(AK-16)** Waste Matrix Code Reference Manual, RPT-TRUW-05, Rev. 36 **(AK-14)**	Y	

	WAP Requirement[1] AMWTP Audit A-15-01 Table C6-1 Waste Analysis Plan (WAP) Checklist [1]	Procedure Documented		Example of Implementation/Objective Evidence, as applicable		Comment (e.g., any change in procedure since last audit, etc.)
		Location	Adequate? Y/N (Why?)	Item Reviewed	Adequate? Y/N	
				VEB14-00098 **(AK-29)** VEB14-00099 **(AK-30)** VEB14-00100 **(AK-31)** AK Summary for Supercompacted Debris Waste (BN510.3), RPT-TRUW-83, Rev. 8, S. 1.7, Table 3 **(AK-1)** AK Summary for Special Setups Waste (BN004) RPT-TRUW-59, Rev. 4, S. 1.6 **(AK-2)** AMWTP Waste Stream Designations RPT-TRUW-12, Rev. 24, Appendix A **(AK-10)** AK Summary for Supercompacted Debris Waste (BN510.3), RPT-TRUW-83, Rev. 8, S. 1.4.5.1, Table 2 **(AK-1)** AK Summary for Special Setups Waste (BN004) RPT-TRUW-59, Rev. 4, S. 1.4.5, Table 1-3 **(AK-2)** Memos supporting waste material parameter evaluation for waste streams BN510.3 and BN004 **(AK-15)** RTR13-00242 RTR13-00305 RTR14-00005 RTR14-00086 **(GEN-1)** VEB13-00526 VEB14-00003 VEB14-00162		

	WAP Requirement[1] AMWTP Audit A-15-01 Table C6-1 Waste Analysis Plan (WAP) Checklist [1]	Procedure Documented		Example of Implementation/Objective Evidence, as applicable		Comment (e.g., any change in procedure since last audit, etc.)
		Location	Adequate? Y/N (Why?)	Item Reviewed	Adequate? Y/N	
				VEB14-00254 VNC14-00022 **(GEN-2)** Acceptable Knowledge Document Review Summary P609A, Rev. 7, BN004 Special Set-ups Waste Stream Profile Package with Waste Stream Profile Form BN004, Rev. 0 and Characterization Information Summary (CIS) and AK Source Document Review Summary P2002A Rev. 1, BN510.3 Waste Stream Profile Package for Super Compactor Debris Waste with CIS Lot 1 and AK Summary. **(GEN-3)**		
31	Are procedures in place to ensure that the following Quality Assurance Objectives are adequately defined and assessed for each characterization method: • Precision as a measure of the mutual agreement among multiple measurements. • Accuracy as the degree of agreement between a measurement result and a true or known value. • Completeness is a measure of the amount of valid data obtained from a method compared to the total amount of data obtained that is expressed as a percentage. • Comparability is the degree to which one data set can be compared to another data set. • Representativeness as an expression of the degree to which data represent characteristics of a population. (Section C-4a(2))	MP-TRUW-8.8 S. 3.1.3.13 & 3.2.4.10	Y	RTR BDRs: RTR13-00241 RTR13-00280 RTR13-00324 RTR14-00018 RTR14-00037 RTR14-00233 **(RTR-1)** VE BDRs: VNC13-00170 VEB13-00518 VNC14-00022 VEB14-00026 VEB14-00054 VEB14-00079 VEB14-00117 VEB14-00146 VEB14-00180 VEB14-00212 VEB14-00254 **(VE-1)**	Y	

	WAP Requirement[1] AMWTP Audit A-15-01 Table C6-1 Waste Analysis Plan (WAP) Checklist [1]	Procedure Documented		Example of Implementation/Objective Evidence, as applicable		Comment (e.g., any change in procedure since last audit, etc.)
		Location	Adequate? Y/N (Why?)	Item Reviewed	Adequate? Y/N	
32	With respect to data generation, are procedures in place to ensure that the generator/storage site's waste characterization program meets the following general requirements: • Testing data packages and batch data reports must be reported accurately in a pre-approved format, must be maintained in permanent files, and must be traceable? • All data must receive a technical review by another qualified operator? (Section C3-4a)	MP-TRUW-8.8 S. 3.1 & 3.2	Y	RTR BDRs: RTR13-00241 RTR13-00280 RTR13-00324 RTR14-00018 RTR14-00037 RTR14-00233 **(RTR-1)** VE BDRs: VNC13-00170 VEB13-00518 VNC14-00022 VEB14-00026 VEB14-00054 VEB14-00079 VEB14-00117 VEB14-00146 VEB14-00180 VEB14-00212 VEB14-00254 **(VE-1)**	Y	
33	Are procedures in place to ensure that the generator/storage site performs validation of waste characterization data for each waste container? (Section C-4)	MP-TRUW-8.8 (All) MP-TRUW-8.9 (All)	Y	RTR13-00242 RTR13-00305 RTR14-00005 RTR14-00086 **(GEN-1)** VEB13-00526 VEB14-00003 VEB14-00162 VEB14-00254 VNC14-00022 **(GEN-2)** RTR BDRs: RTR13-00241 RTR13-00280 RTR13-00324 RTR14-00018 RTR14-00037 RTR14-00233 **(RTR-1)**	Y	

	WAP Requirement[1] AMWTP Audit A-15-01 Table C6-1 Waste Analysis Plan (WAP) Checklist [1]	Procedure Documented		Example of Implementation/Objective Evidence, as applicable		Comment (e.g., any change in procedure since last audit, etc.)
		Location	Adequate? Y/N (Why?)	Item Reviewed	Adequate? Y/N	
				VE BDRs: VNC13-00170 VEB13-00518 VNC14-00022 VEB14-00026 VEB14-00054 VEB14-00079 VEB14-00117 VEB14-00146 VEB14-00180 VEB14-00212 VEB14-00254 **(VE-1)**		
34	Are procedures in place to ensure that the generator/storage site has a pre-approved format for reporting waste characterization data? (Section C-4a(3))	MP-TRUW-8.8 (All) MP-TRUW-8.9 (All) INST-FOI-17 (All) INST-OI-34 (All) INST-OI-12 (All)	Y	RTR13-00242 RTR13-00305 RTR14-00005 RTR14-00086 **(GEN-1)** VEB13-00526 VEB14-00003 VEB14-00162 VEB14-00254 VNC14-00022 **(GEN-2)** Acceptable Knowledge Document Review Summary P609A, Rev. 7, BN004 Special Set-ups Waste Stream Profile Package with Waste Stream Profile Form BN004, Rev. 0 and Characterization Information Summary CIS) and AK Source Document Review Summary P2002A Rev. 1, BN510.3 Waste Stream Profile Package for Super Compactor Debris Waste with CIS Lot 1 and AK Summary. **(GEN-3)**	Y	

	WAP Requirement[1] AMWTP Audit A-15-01 Table C6-1 Waste Analysis Plan (WAP) Checklist [1]	Procedure Documented		Example of Implementation/Objective Evidence, as applicable		Comment (e.g., any change in procedure since last audit, etc.)
		Location	Adequate? Y/N (Why?)	Item Reviewed	Adequate? Y/N	
				RTR BDRs: RTR13-00241 RTR13-00280 RTR13-00324 RTR14-00018 RTR14-00037 RTR14-00233 **(RTR-1)** VE BDRs: VNC13-00170 VEB13-00518 VNC14-00022 VEB14-00026 VEB14-00054 VEB14-00079 VEB14-00117 VEB14-00146 VEB14-00180 VEB14-00212 VEB14-00254 **(VE-1)**		
35	Are procedures in place to ensure that the generator/storage site prepares testing batch data reports to meet the requirements of their own site-specific QAPjP and/or SOPs? (Section C-4a(3))	MP-TRUW-8.8 (All) MP-TRUW-8.9 (All)	Y	RTR13-00242 RTR13-00305 RTR14-00005 RTR14-00086 **(GEN-1)** VEB13-00526 VEB14-00003 VEB14-00162 VEB14-00254 VNC14-00022 **(GEN-2)** RTR BDRs: RTR13-00241 RTR13-00280 RTR13-00324 RTR14-00018 RTR14-00037 RTR14-00233 **(RTR-1)**	Y	

	WAP Requirement[1] AMWTP Audit A-15-01 Table C6-1 Waste Analysis Plan (WAP) Checklist [1]	Procedure Documented		Example of Implementation/Objective Evidence, as applicable		Comment (e.g., any change in procedure since last audit, etc.)
		Location	Adequate? Y/N (Why?)	Item Reviewed	Adequate? Y/N	
				VE BDRs: VNC13-00170 VEB13-00518 VNC14-00022 VEB14-00026 VEB14-00054 VEB14-00079 VEB14-00117 VEB14-00146 VEB14-00180 VEB14-00212 VEB14-00254 **(VE-1)**		
36	Are procedures in place to ensure that all raw data is collected and managed at the data generation level in accordance with the following criteria: • All raw data shall be signed and dated in reproducible ink by the individual collecting the data, or signed and dated using electronic signatures • All data shall be recorded clearly, legibly, and accurately in field records • All changes to original data shall be lined out, initialed, and dated by the individual making the change. Original data may not be obliterated or otherwise be made unreadable • All data shall be transferred and reduced from field records completely and accurately • All field records shall be maintained as specified in Table C-2 of Attachment C • Data shall be organized into standard reporting formats for reporting purposes • All electronic and video data must be stored to ensure that waste container and QC data are readily retrievable (Section C3-4a)	MP-TRUW-8.8 S. 3.1 & 3.2 MP-TRUW-8.1 S. G.1, G.3 & G.4	Y	RTR BDRs: RTR13-00241 RTR13-00280 RTR13-00324 RTR14-00018 RTR14-00037 RTR14-00233 **(RTR-1)** VE BDRs: VNC13-00170 VEB13-00518 VNC14-00022 VEB14-00026 VEB14-00054 VEB14-00079 VEB14-00117 VEB14-00146 VEB14-00180 VEB14-00212 VEB14-00254 **(VE-1)**	Y	
37	Are procedures in place to ensure that 100 % of batch data reports are subject to independent technical review by an individual qualified to review the data who was not involved in the generation or recording of the data under review. The reviewer shall release the data through signature with an associated review checklist prior to characterization of the associated waste and shipment to the WIPP. The review shall ensure the following, as applicable: • Data generation and reduction were conducted according to the methods used and reported in the proper units and significant figures	MP-TRUW-8.8 S. 3.1 & 3.2 MP-TRUW-8.1 S. G.4	Y	RTR BDRs: RTR13-00241 RTR13-00280 RTR13-00324 RTR14-00018 RTR14-00037 RTR14-00233 **(RTR-1)**	Y	

	WAP Requirement[1] AMWTP Audit A-15-01 Table C6-1 Waste Analysis Plan (WAP) Checklist [1]	Procedure Documented		Example of Implementation/Objective Evidence, as applicable		Comment (e.g., any change in procedure since last audit, etc.)
		Location	Adequate? Y/N (Why?)	Item Reviewed	Adequate? Y/N	
	• Calculations have been verified by a valid calculation program, a spot check of verified calculation programs, and/or a 100 percent check of all hand calculations • The data have been reviewed for transcription errors • The testing QA documentation for BDRs is complete and includes, as applicable, raw data, calculation records, calibration records • Radiography tapes are reviewed on a waste container basis at a minimum of once per testing batch or once per day of operation, whichever is less frequent. The radiography tape will be reviewed against the data on the radiography form to ensure that data are complete and correct • QAOs have been met (Section C3-4a(1))			VE BDRs: VNC13-00170 VEB13-00518 VNC14-00022 VEB14-00026 VEB14-00054 VEB14-00079 VEB14-00117 VEB14-00146 VEB14-00180 VEB14-00212 VEB14-00254 **(VE-1)**		
40	Are procedures in place to ensure that 100 percent of all batch data reports receive a Site Project Manager signature release with an associated review checklist prior to characterization of the associated waste and shipment to the WIPP. This release shall ensure the following: • Testing batch QC checks were properly performed. Radiography data are complete and acceptable based on evidence of videotape review of one waste container per day or once per testing batch, whichever is less frequent • Data generation level independent technical review, validation, and verification have been performed as evidenced by the completed review checklists and appropriate signature releases. • Independent technical reviewers were not involved in the generation or recording of the data under review. • Batch Data review checklists are complete • Batch Data Reports are complete and data properly reported • Verify that data are within established data assessment criteria and meet all applicable QAOs (Section C3-4b(1))	MP-TRUW-8.9 (All)	Y	RTR13-00242 RTR13-00305 RTR14-00005 RTR14-00086 **(GEN-1)** VEB13-00526 VEB14-00003 VEB14-00162 VEB14-00254 VNC14-00022 **(GEN-2)**	Y	
42	Are procedures in place to ensure that a repeat of the data review process at the data generation level will be performed on a minimum of one randomly chosen waste container every quarter to determine if the verification and validation is performed according to documented procedures? (Section C3-4b)	MP-TRUW-8.9 S. 3.3	Y	AMWTP Surveillance Report: TRU Programs 1st Quarter Level 1 Data Generation Level Batch Review #84529 AMWTP Surveillance Report. AMWTP Surveillance Report: TRU Programs 2nd	Y	

	WAP Requirement[1] AMWTP Audit A-15-01 Table C6-1 Waste Analysis Plan (WAP) Checklist [1]	Procedure Documented		Example of Implementation/Objective Evidence, as applicable		Comment (e.g., any change in procedure since last audit, etc.)
		Location	Adequate? Y/N (Why?)	Item Reviewed	Adequate? Y/N	
				Quarter Level 1 Data Generation Level Batch Review #87995 AMWTP Surveillance Report. **(GEN-4)**		
43	Are procedures in place and checklists are available to prepare a Site Project Manager (SPM) Summary and a Data Validation Summary (the summaries may be in the same document)? The SPM Summary includes a validation checklist for each batch that is of sufficient detail to document all aspects of a batch data report that could affect data quality. The Data Validation Summary must identify each Batch Data Report reviewed, describe how the validation was performed, identify all problems, and identify all acceptable and unacceptable data. Summaries must include release signatures. (Section C3-4b(2))	MP-TRUW-8.9 S. 3.0 & 3.1	Y	RTR13-00242 RTR13-00305 RTR14-00005 RTR14-00086 **(GEN-1)** VEB13-00526 VEB14-00003 VEB14-00162 VEB14-00254 VNC14-00022 **(GEN-2)**	Y	
44	Are procedures in place to ensure that non-administrative, WAP-related nonconformances first identified at the site project manager level are reported to the Permittees within seven calendar days of identification, that nonconformance reports are prepared within 30 calendar days, and that corrective action is implemented prior to waste shipment? (Section C3-7)	MP-TRUW-8.2 S. C3-7 MP-Q&SI-5.4 S. 3.4.2	Y	Nonconformance Reports (NCRs): 74039 74582 75766 75801 **(GEN-5)**	Y	
45	Are procedures in place to ensure that any waste container for which a nonconformance report (**NCR**) has been written will not be shipped to the WIPP facility unless the condition that led to the NCR for that container is appropriately identified, reconciled, corrected, and documented? Are nonconformance reports prepared for nonconformances identified? Are nonconformances identified and tracked, and does the Site Project Manager oversee the nonconformance report process? (Section C3-7)	MP-TRUW-8.2 S. C3-7 MP-Q&SI-5.4 (All)	Y	NCRS: 81196 81217 82907 82950 88128 88321 **(GEN-6)**	Y	
	DATA TRANSMITTAL					
48	Are procedures in place to ensure that the generator/storage site transmits data by hard copy or electronic copy from the data generation level to the site project level? If electronic, does the generator/site have a hard copy available on demand? (Section C-4a(5))	MP-TRUW-8.9 S. 3.1 & 3.2	Y	RTR13-00242 RTR13-00305 RTR14-00005 RTR14-00086 **(GEN-1)**	Y	

	WAP Requirement[1] AMWTP Audit A-15-01 Table C6-1 Waste Analysis Plan (WAP) Checklist [1]	Procedure Documented		Example of Implementation/Objective Evidence, as applicable		Comment (e.g., any change in procedure since last audit, etc.)
		Location	Adequate? Y/N (Why?)	Item Reviewed	Adequate? Y/N	
				VEB13-00526 VEB14-00003 VEB14-00162 VEB14-00254 VNC14-00022 **(GEN-2)**		
50	Are procedures in place to ensure that the generator/storage site inputs the data into the WWIS manually or electronically? (Section C-4a(5))	MP-TRUW-8.5 S. 3.0	Y	Waste Characterization Case Files containing WWIS/WDS Waste Container Data Report, Container Data Approval Form-1936, WDS Certification Data Entry Form (WCDEF), and supporting forms and data for containers: 10295803 10018127 BN10493493 BN10514268 10367054 BN10528597 **(GEN-7)**	Y	
51	Are procedures in place to ensure that the generator/storage site enters the data into the WWIS in the exact format required by the database? (Section C-4a(5))	MP-TRUW-8.5 S. 3.0	Y	Waste Characterization Case Files containing WWIS/WDS Waste Container Data Report, Container Data Approval Form-1936, WDS Certification Data Entry Form (WCDEF), and supporting forms and data for containers: 10295803 10018127 BN10493493 BN10514268 10367054 BN10528597 **(GEN-7)**	Y	

	WAP Requirement[1] AMWTP Audit A-15-01 Table C6-1 Waste Analysis Plan (WAP) Checklist [1]	Procedure Documented		Example of Implementation/Objective Evidence, as applicable		Comment (e.g., any change in procedure since last audit, etc.)
		Location	Adequate? Y/N (Why?)	Item Reviewed	Adequate? Y/N	
52	Are procedures in place to ensure all of the data presented on Table C-3 of the Permit is transmitted to the WWIS? (Table C-3)	MP-TRUW-8.5 S. 3.0	Y	Waste Characterization Case Files containing WWIS/WDS Waste Container Data Report, Container Data Approval Form-1936, WDS Certification Data Entry Form (WCDEF), and supporting forms and data for containers: 10295803 10018127 BN10493493 BN10514268 10367054 BN10528597 **(GEN-7)**	Y	
	RECORDS AND RECORD MANAGEMENT					
55	Are procedures in place to ensure that the generator/storage site's hard copy and/or electronic data reports follow the Permittees' format requirements? (Section C-4a(3))	MP-TRUW-8.9 S. 3.1 & 3.2	Y	RTR13-00242 RTR13-00305 RTR14-00005 RTR14-00086 **(GEN-1)** VEB13-00526 VEB14-00003 VEB14-00162 VEB14-00254 VNC14-00022 **(GEN-2)** Acceptable Knowledge Document Review Summary P609A, Rev. 7, BN004 Special Set-ups Waste Stream Profile Package with Waste Stream Profile Form BN004, Rev. 0 and Characterization Information Summary (CIS) and AK Source Document Review Summary P2002A	Y	

	WAP Requirement[1] AMWTP Audit A-15-01 Table C6-1 Waste Analysis Plan (WAP) Checklist [1]	Procedure Documented		Example of Implementation/Objective Evidence, as applicable		Comment (e.g., any change in procedure since last audit, etc.)
		Location	Adequate? Y/N (Why?)	Item Reviewed	Adequate? Y/N	
				Rev. 1, BN510.3 Waste Stream Profile Package for Super Compactor Debris Waste with CIS Lot 1 and AK Summary. **(GEN-3)**		
56	Are procedures in place to ensure that hard copy or electronic Waste Stream Profile Form will include the following: • Generator/storage site name • Generator/storage site EPA ID • Date of audit report approval by NMED (if obtained) • Original generator of waste stream • Whether waste is Contact-Handled or Remote-Handled • Waste Stream WIPP Identification Number • Summary Category Group • Waste Matrix Code Group • Waste Material Parameter Weight Estimates per unit of waste • Waste stream name • A description of the waste stream • Applicable EPA hazardous waste codes numbers • Applicable TRUCON codes • A listing of acceptable knowledge documentation used to identify the waste stream • The waste characterization procedures used and the reference and date of the procedure • Certification signature of Site Project Manager, name, title, and date signed (Section C3-6b(1))	MP-TRUW-8.14 S. 3.1 & Form 1195	Y	Acceptable Knowledge Document Review Summary P609A, Rev. 7, BN004 Special Set-ups Waste Stream Profile Package with Waste Stream Profile Form BN004, Rev. 0 and Characterization Information Summary (CIS). AK Source Document Review Summary P2002A Rev. 1, BN510.3 Waste Stream Profile Package for Super Compactor Debris Waste with CIS Lot 1 and AK Summary. **(GEN-3)**	Y	
56a	Are procedures in place to ensure that hard copy or electronic Characterization Information Summary will include the following: • Data reconciliation with DQOs • Radiography and visual examination summary to document that all prohibited items are absent in the waste and to verify that the physical form of the waste matches its waste stream description as determined by AK (if applicable) • A complete listing of all container identification numbers used to generate the Waste Stream Profile Form, cross-referenced to each Batch Data	MP-TRUW-8.14 S. 3.1 & Form 1195	Y	Acceptable Knowledge Document Review Summary P609A, Rev. 7, BN004 Special Set-ups Waste Stream Profile Package with Waste Stream Profile Form BN004, Rev. 0 and Characterization Information Summary (CIS) and	Y	

	WAP Requirement[1] AMWTP Audit A-15-01 Table C6-1 Waste Analysis Plan (WAP) Checklist [1]	Procedure Documented		Example of Implementation/Objective Evidence, as applicable		Comment (e.g., any change in procedure since last audit, etc.)
		Location	Adequate? Y/N (Why?)	Item Reviewed	Adequate? Y/N	
	Report • Complete AK summary, including stream name and number, point of generation, waste stream volume (current and projected), generation dates, TRUCON codes, Summary Category Group, Waste Matrix Code(s) and Waste Matrix Code Group, other TWBIR information, waste stream description, areas of operation, generating processes, RCRA determinations, radionuclide information, all references used to generate the AK summary, and any other information required by Permit Attachment C4, Section C4-2b. • Method for determining Waste Material Parameter Weights per unit of waste. • List of any AK Sufficiency Determinations requested for the waste stream • Certification through acceptable knowledge or testing that any waste assigned the hazardous waste number of U134 (hydrofluoric acid) no longer exhibits the characteristic of corrosivity. This is verified by ensuring that no liquid is present in U134 waste. • A justification for the selection of radiography and/or VE as an appropriate method of characterizing the waste. (Section C3-6b(2))			AK Source Document Review Summary P2002A Rev. 1, BN510.3 Waste Stream Profile Package for Super Compactor Debris Waste with CIS Lot 1 and AK Summary. **(GEN-3)**		
56b	Are procedures in place to assure that ongoing container characterization results are cross referenced to Batch Data Reports? (Section C3-6b)	MP-TRUW-8.9 S. 3.1.3 Note	Y	RTR13-00242 RTR13-00305 RTR14-00005 RTR14-00086 **(GEN-1)** VEB13-00526 VEB14-00003 VEB14-00162 VEB14-00254 VNC14-00022 **(GEN-2)** Acceptable Knowledge Document Review Summary P609A, Rev. 7, BN004 Special Set-ups Waste Stream Profile Package with Waste Stream Profile Form BN004, Rev. 0 and Characterization Information Summary	Y	

	WAP Requirement[1] AMWTP Audit A-15-01 Table C6-1 Waste Analysis Plan (WAP) Checklist [1]	Procedure Documented		Example of Implementation/Objective Evidence, as applicable		Comment (e.g., any change in procedure since last audit, etc.)
		Location	Adequate? Y/N (Why?)	Item Reviewed	Adequate? Y/N	
				(CIS) and AK Source Document Review Summary P2002A Rev. 1, BN510.3 Waste Stream Profile Package for Super Compactor Debris Waste with CIS Lot 1 and AK Summary. **(GEN-3)**		
58	Are procedures in place to ensure that project level reports are compiled into Characterization Information Summaries? (Section C3-6b)	MP-TRUW-8.11 S. 3.2.13 MP-TRUW-8.14 S. 3.1.5	Y	Acceptable Knowledge Document Review Summary P609A, Rev. 7, BN004 Special Set-ups Waste Stream Profile Package with Waste Stream Profile Form BN004, Rev. 0 and Characterization Information Summary (CIS) and AK Source Document Review Summary P2002A Rev. 1, BN510.3 Waste Stream Profile Package for Super Compactor Debris Waste with CIS Lot 1 and AK Summary. **(GEN-3)**	Y	

	WAP Requirement[1] AMWTP Audit A-15-01 Table C6-1 Waste Analysis Plan (WAP) Checklist [1]	Procedure Documented		Example of Implementation/Objective Evidence, as applicable		Comment (e.g., any change in procedure since last audit, etc.)
		Location	Adequate? Y/N (Why?)	Item Reviewed	Adequate? Y/N	
59	Are procedures in place to ensure that the generator/storage site uses forms for data reporting that are pre-approved forms in site-specific documentation? (Section C3-6)	MP-TRUW-8.8 S. 3.1 & 3.2	Y	RTR BDRs: RTR13-00241 RTR13-00280 RTR13-00324 RTR14-00018 RTR14-00037 RTR14-00233 **(RTR-1)** VE BDRs: VNC13-00170 VEB13-00518 VNC14-00022 VEB14-00026 VEB14-00054 VEB14-00079 VEB14-00117 VEB14-00146 VEB14-00180 VEB14-00212 VEB14-00254 **(VE-1)**	Y	

	WAP Requirement[1] AMWTP Audit A-15-01 Table C6-1 Waste Analysis Plan (WAP) Checklist [1]	Procedure Documented		Example of Implementation/Objective Evidence, as applicable		Comment (e.g., any change in procedure since last audit, etc.)
		Location	Adequate? Y/N (Why?)	Item Reviewed	Adequate? Y/N	
60	Are procedures in place to ensure that the generator/storage site's site project manager submits to the WIPP facility a summary of the waste stream information and reconciliation with data quality objectives (DQOs) once a waste stream is characterized? (Section C-4a(5))	MP-TRUW-8.11 S. 3.2 MP-TRUW-8.14 S. 3.1.3	Y	Acceptable Knowledge Document Review Summary P609A, Rev. 7, BN004 Special Set-ups Waste Stream Profile Package with Waste Stream Profile Form BN004, Rev. 0 and Characterization Information Summary (CIS) and AK Source Document Review Summary P2002A Rev. 1, BN510.3 Waste Stream Profile Package for Super Compactor Debris Waste with CIS Lot 1 and AK Summary. **(GEN-3)**	Y	
61	Are procedures in place to ensure that the generator/storage site project office completes a WSPF based on the Batch Data Reports? (C3-6b)	MP-TRUW-8.14 S. 3.1	Y	RTR13-00242 RTR13-00305 RTR14-00005 RTR14-00086 **(GEN-1)** VEB13-00526 VEB14-00003 VEB14-00162 VEB14-00254 VNC14-00022 **(GEN-2)** Acceptable Knowledge Document Review Summary P609A, Rev. 7, BN004 Special Set-ups Waste Stream Profile Package with Waste Stream Profile Form BN004, Rev. 0 and Characterization Information Summary (CIS) and AK Source Document Review Summary P2002A Rev. 1, BN510.3 Waste Stream Profile Package for	Y	

	WAP Requirement[1] AMWTP Audit A-15-01 Table C6-1 Waste Analysis Plan (WAP) Checklist [1]	Procedure Documented		Example of Implementation/Objective Evidence, as applicable		Comment (e.g., any change in procedure since last audit, etc.)
		Location	Adequate? Y/N (Why?)	Item Reviewed	Adequate? Y/N	
				Super Compactor Debris Waste with CIS Lot 1 and AK Summary. **(GEN-3)**		
62	Are procedures in place to ensure that the generator/storage Site Project Manager submits the WSPF to the Permittees for DOE's approval along with the accompanying Characterization Information Summary for that waste stream? (Section C-4a(5))	MP-TRUW-8.14 S. 3.1	Y	Acceptable Knowledge Document Review Summary P609A, Rev. 7, BN004 Special Set-ups Waste Stream Profile Package with Waste Stream Profile Form BN004, Rev. 0 and Characterization Information Summary (CIS) and AK Source Document Review Summary P2002A Rev. 1, BN510.3 Waste Stream Profile Package for Super Compactor Debris Waste with CIS Lot 1 and AK Summary. **(GEN-3)**	Y	
63	Are procedures in place to ensure that the generator/storage site maintains records related to waste characterization testing activities in the testing facility files, or site project files for those facilities located on-site? (Section C-4a(6))	MP-TRUW-8.2 S. C-4a(6) & Table C-3 MP-DOCS-18.2 S. 3.4, 3.8 & Appendix B	Y	Project Record Categories, Classification, Disposition, and Retention Matrix (Appendix B of MP-DOCS-18.2.) **(GEN-8)**	Y	
64	Are procedures in place to ensure that the appropriate documented training and indoctrination is performed for all individuals and that procedures are documented in site specific QAPjPs and procedures? (Section C3-8)	MP-RTQP-14.4 (All) MP-TRUW-8.2 S. C3-8 & Table C3-2 LST-RTQP-03-IM, S. 2.0	Y	Qualification records for selected AMWTP personnel. (**GEN-9**)	Y	
66	Are procedures in place to ensure that the generator/storage site has an appropriate records inventory and disposition schedule (RIDS) or equivalent that was prepared and approved by appropriate site personnel? (Section C-4a(6))	MP-TRUW-8.2 S. C-4a(6) & Table C-3 MP-DOCS-18.2 (All)	Y	Project Record Categories, Classification, Disposition, and Retention Matrix (Appendix B of MP-DOCS-18.2.) **(GEN-8)**	Y	

	WAP Requirement[1] AMWTP Audit A-15-01 Table C6-1 Waste Analysis Plan (WAP) Checklist [1]	Procedure Documented		Example of Implementation/Objective Evidence, as applicable		Comment (e.g., any change in procedure since last audit, etc.)
		Location	Adequate? Y/N (Why?)	Item Reviewed	Adequate? Y/N	
67	Are procedures in place to ensure that the generator/storage site maintains all records relevant to an enforcement action, regardless of disposition, until they are no longer needed for enforcement action, and then dispositioned per the approved RIDS? (Section C-4a(6))	MP-DOCS-18.2 Appendix B	Y	Project Record Categories, Classification, Disposition, and Retention Matrix (Appendix B of MP-DOCS-18.2.) **(GEN-8)**	Y	
68	Are procedures in place to ensure that the generator/storage site maintains records that are designated as Lifetime Records for the life of the waste characterization program plus six years or that the records have been transferred to the WIPP Records Archive facility? Lifetime Records include: • Test facility Batch Data Reports, • Waste Stream Characterization Package, • Data reduction, validation, and reporting documentation, • Acceptable knowledge documentation, • WSPF and Characterization Information Summary (Section C-4a(6), Table C-2)	MP-TRUW-8.2 S. C-4a(6) & Table C-3 MP-DOCS-18.2 S. 3.6.4.1, 3.8 & Appendix B	Y	Project Record Categories, Classification, Disposition, and Retention Matrix (Appendix B of MP-DOCS-18.2.) **(GEN-8)**	Y	
69	Are procedures in place to ensure that the generator/storage site maintains records that are designated as Non-Permanent Records for ten years from the date of record generation, and then dispositioned according per the approved RIDS or transferred to the WIPP Records Archive facility? Non-Permanent Records include: • Nonconformance documentation, • Variance documentation, • Assessment documentation, • Calculations and related software documentation, • Training/qualification documentation, • QAPjP documentation (all revisions), • Calibration documentation, • Procurement documentation, • QA procedures (all revisions), • Technical implementing procedures (all revisions), and • Audio/video recording (radiography, visual, etc.). (Section C-4a(6), Table C-2)	MP-TRUW-8.2 S. C-4a(6) & Table C-3 MP-DOCS-18.2 Appendix B	Y	Project Record Categories, Classification, Disposition, and Retention Matrix (Appendix B of MP-DOCS-18.2.) **(GEN-8)**	Y	

	WAP Requirement[1] AMWTP Audit A-15-01 Table C6-1 Waste Analysis Plan (WAP) Checklist [1]	Procedure Documented		Example of Implementation/Objective Evidence, as applicable		Comment (e.g., any change in procedure since last audit, etc.)
		Location	Adequate? Y/N (Why?)	Item Reviewed	Adequate? Y/N	
70	Are procedures in place to ensure that the generator/storage site has raw data that is identifiable and legible, and provides documentary evidence of quality? (Section C-4a(6))	MP-TRUW-8.8 S. 3.1 & 3.2	Y	RTR BDRs: RTR13-00241 RTR13-00280 RTR13-00324 RTR14-00018 RTR14-00037 RTR14-00233 **(RTR-1)** VE BDRs: VNC13-00170 VEB13-00518 VNC14-00022 VEB14-00026 VEB14-00054 VEB14-00079 VEB14-00117 VEB14-00146 VEB14-00180 VEB14-00212 VEB14-00254 **(VE-1)**	Y	
71	Are procedures in place to ensure that if the generator/storage site ceases to operate, that all records be transferred before closeout? (Section C-4a(6))	MP-TRUW-8.2 S. C-4a(6) MP-DOCS-18.2 Appendix B	Y	Project Record Categories, Classification, Disposition, and Retention Matrix (Appendix B of MP-DOCS-18.2.) **(GEN-8)**	Y	
	SHIPMENT					
72	Are procedures in place to ensure that the generator/storage site accurately completes an EPA Hazardous Waste Manifest prior to shipping the waste to WIPP that contains the following information: • Generator/storage site name and EPA ID • Generator/storage site contact name and phone number • Quantity of waste • List of up to six state and/or federal hazardous waste numbers in each line item • Listing of all container IDS • Signature of authorized generator representative (Section C-5b)	MP-TRUW-8.12 Section 3.3.4 – 3.3.29	Y	Hazardous Waste Manifests: 001600972 GBF 001600973 GBF **(GEN-10)**	Y	

	WAP Requirement[1] AMWTP Audit A-15-01 Table C6-1 Waste Analysis Plan (WAP) Checklist [1]	Procedure Documented		Example of Implementation/Objective Evidence, as applicable		Comment (e.g., any change in procedure since last audit, etc.)
		Location	Adequate? Y/N (Why?)	Item Reviewed	Adequate? Y/N	
73	Are procedures in place to ensure that the generator/storage site accurately completes the following container specific information: • Waste stream identification number • List of hazardous waste numbers per container • Certification data • Shipping data (Section C-5b)	MP-TRUW-8.12 Section 3.3.4 – 3.3.29	Y	Hazardous Waste Manifests: 001600972 GBF 001600973 GBF **(GEN-10)**	Y	

1. The WAP requirements should be presented in documents, such as procedures. Each of the questions posed under WAP requirements is meant to ask whether procedures are in place or whether documents are evident which demonstrate that the specific WAP requirement is or can be met.

AMWTP
Advanced Mixed Waste Treatment Project

AMWTP

Batch Report Coversheet

Date: 12-Sep-2014

Time: 13:05

GEN1

Batch Type Real Time Radiography

Batch Id RTR13-00242

Batch Report No. RTR13-00242

Open Date 12-OCT-13 11:05:21

Close Date 13-OCT-13 14:00:10

Batch Status AP

Test Facility Idaho AMWTP

Equipment Id Z-213-101 RTR Station Left (213-101)

Container Id	IDC	Analysis Id	Date Examined	QC Type	Analysis Status	Operator
10140632	RF-750	0000092421	12-OCT-13 11:05:21	Original	P	DANNY GREEN
10145408	RF-750	0000092424	12-OCT-13 12:03:16	Original	P	SHAWN JORDAN
10330336	RF-300	0000092427	12-OCT-13 13:58:57	Original	P	DANNY GREEN
10330376	RF-960	0000092429	12-OCT-13 14:19:34	Original	P	DANNY GREEN
10230896	RF-330	0000092431	12-OCT-13 14:45:35	Original	P	DANNY GREEN
10288555	RF-750	0000092432	12-OCT-13 15:01:27	Original	P	DANNY GREEN
10415942	RF-003	0000092436	12-OCT-13 16:58:28	Original	P	DANNY GREEN
10408625	RF-003	0000092438	12-OCT-13 17:15:12	Original	P	DANNY GREEN
10408608	RF-003	0000092440	12-OCT-13 17:28:58	Original	P	DANNY GREEN
10408625	RF-003	0000092441	12-OCT-13 17:51:25	RTR OIO	P	SAMUEL PHILLIPS
10320693	RF-750	0000092442	13-OCT-13 10:14:07	Original	P	MICHAEL RICKS
10221324	RF-001	0000092443	13-OCT-13 10:29:34	Original	P	MICHAEL RICKS
10407548	RF-003	0000092445	13-OCT-13 10:52:37	Original	P	MICHAEL RICKS
10415417	RF-003	0000092447	13-OCT-13 11:25:59	Original	P	MICHAEL RICKS
10501175	RF-002	0000092449	13-OCT-13 12:15:52	Original	P	MICHAEL RICKS
10320693	RF-750	0000092450	13-OCT-13 12:52:51	Replicate / Duplicate	P	JOHN CUMMINGS

INFORMATION ONLY

**********Batch Comments**********

Written By	Date	Comment
JCUMMINGS	13-OCT-13 14:00:27	Closed batch per S.S. Dave Becker.
CHINKLE	14-OCT-13 15:08:22	14-OCT-13 CHINKLE AKE This batch is returned for rework. AK does not concur with the recommended IDC change for container 10145408. CHD 10/14/13
KHUGHES	22-OCT-13 10:05:34	Validated electronically.
KHUGHES	27-OCT-13 19:20:49	promote to SPM
DMARQUARDT	08-NOV-13 12:40:49	Reviewed and validated. Approve.

**********Batch E-Signature History**********

Approval ID	User ID	Signature Date	Comment
2638549	JCUMMINGS	13-OCT-2013 14:00:27	Closed batch per S.S. Dave Becker.
2640252	SJORDAN	16-OCT-2013 13:31:36	Rework complete.
2645140	KHUGHES	27-OCT-2013 19:20:50	promote to SPM
2651220	DMARQUARDT	08-NOV-2013 12:40:49	Reviewed and validated. Approve.

***** End of Batch Report Coversheet Report *****

AMWTP
Advanced Mixed Waste Treatment Project

AMWTP

RTR Analysis Report

Date: 12-Sep-2014
Time: 13:06

Batch Id RTR13-00242 **Container Id** 10140632 **Analysis Id** 0000092421

Container Type C drum, 83 Gallon **Analysis Status** Pass

RTR Date 12-OCT-2013 11:05 **Gross Weight** 273.420 Lbs **Net Weight** 130.420 Lbs

Equipment Z-213-101 **Waste Matrix Code** S5490 **IDC** RF-750 Pits 11 & 12 Debris

Recording Id 1RTR13-00133 **Procedure Id** INST-OI-12 **Revision** 52 **Approval Level** SPM

Is Test Pattern Resolution Ok? Yes **Start Side** A **Replicate** No **OIO** No

Audio Visual Ok? Yes **Operator** DGREEN

Result Comment Waste consists of plastic sheeting.
AK concurs with the recommended IDC, RF-750, for container 10140632. No AKR or NCR is necessary. CHD 10/14/13

Package

IDC Correct Yes **Recommended IDC** **Summary Category** S5000

Idc Change Reason

Rigid Liner Present? No **LinerType** NO LINER

Liner Punctured? N/A **Sharp Objects?** No

Liner Lid Present? No **Sharp Objects Are Protected?** Yes

Liner Lid Deformed? N/A **Layers Of Confinement** 1

Fill Factor 70

Bag Closure Method Twisted and Taped

Liquids

Liquid Present? Yes **Internal Container with Liquid** No

Internal Container with Liquid 0 pints **LA Candidate** No

Liquid Between Liner & Drum 0 pints **Containerized Liquid**

Total Liquid Amount 34 pints **Containerized Liquid Amt** 0 pints

Other Liquids 34 pints **Comment** Multiple pockets of liquid in the bagging throughout the waste, & across the entire 4" of the bottom of the drum 34 pts. total.

Prohibited Liquids Present Yes **Comment** > 1%

Contents-Drum or Box

	Value	Comment		Value	Comment
Lead?	No		**Mercury Present?**	No	
Wet Cell Batteries?	No		**Explosives?**	No	
Prohibited Compressed Gases?	No		**PCBs Present?**	No	
Aerosol Cans?	No		**PCB Mass (lbs)**	0	
Non-Mixed Hazardous Waste Present?	No		**Sealed Containers Over 4L?**	No	

Non-Radionuclide Pyrophoric Materials Present? No

Waste exhibiting the characteristics of Ignitability, Corrosivity or Reactivity Present? No

Wastes Incompatible with backfill, seal and panel closure materials, container and packaging materials,shipping container or other wastes? No

Impenetrable Dense Objects? Yes - Unacceptable The bottom 4" of the drum are impenetrable due to liquid.

Waste Material Items

Packaging Materials

Material Item	Quantity	Unit	Unit Wt(lbs)	Item Wt(lbs)
Drum plastic bag	1.000	EACH	1.000	1.000
55-GAL DRUM (17c)	1.000	EACH	59.000	59.000

Waste Items byWeight

Material Item	Quantity	Unit	Unit Wt(lbs)	Item Wt(lbs)
paper & rags	1.000	EACH	20.000	20.000

Batch Id RTR13-00242 **Container Id** 10140632 **Analysis Id** 0000092421

Waste Items by Volume

Material Item	Quantity	Unit	Unit Wt(lbs)	Item Wt(lbs)
Oil-Dri (Inside 55 gal drum)	80.000	PINTS	0.420	33.600
Liquids for Other Inorganics	34.000	PINTS	1.000	34.000

Waste Parameters

Waste Parameter	Remaining Weight %	Actual Weight Lbs
Iron-based Metals/Alloys	0.000	0.000
Aluminum-based Metals/Alloys	0.000	0.000
Other metals	0.000	0.000
Other Inorganic Materials	0.000	67.600
Cellulosics	0.000	20.000
Rubber	0.000	0.000
Plastic (Waste Materials)	100.000	42.820
Inorganic matrix	0.000	0.000
Organic matrix	0.000	0.000
Soils/gravel	0.000	0.000
Steel (packaging materials)	0.000	142.000
Plastic (packaging materials)	0.000	1.000
Cellulosics Packaging	0.000	0.000

Analysis Esignature History

Esig Approval Id	User Id	Esignature Date	Comment
2639163	CHINKLE	14-OCT-2013 15:08	This batch is returned for rework. AK does not concur with the recommended IDC change for container 10145408. CHD 10/14/13 added to liquid comment
2638299	DGREEN	12-OCT-2013 11:08	
2638297	DGREEN	12-OCT-2013 11:05	

Batch Id RTR13-00242 **Container Id** 10145408 **Analysis Id** 0000092424

Container Type 83u 83 Gallon unmarked and non-DOT apprvd cntr **Analysis Status** Pass

RTR Date 12-OCT-2013 12:03 **Gross Weight** 937.125 Lbs **Net Weight** 793.125 Lbs

Equipment Z-213-101 **Waste Matrix Code** S5490 **IDC** RF-750 Pits 11 & 12 Debris

Recording Id 1RTR13-00133 **Procedure Id** INST-OI-12 **Revision** 52 **Approval Level** SPM

Is Test Pattern Resolution Ok? Yes **Start Side** A **Replicate** No **OIO** No

Audio Visual Ok? Yes **Operator** DGREEN

Result Comment Waste consists of a 30 gal drum encapsulated in cement, it appears to contain primarily lead sheeting & round lead plates. AK does not concur with the recommended IDC, UN-00B, for container 10145408. AK assigned the correct historical ID, IDRFOP007106723, to this container and assay confirms WG. AK recommends the historical IDC, RF-750. No AKR or NCR is required. CHD 10/14/13
Rework. Answered IDC correct yes per AK. SJ. 10/16/13

Package

IDC Correct Yes **Recommended IDC** **Summary Category** S5000

Idc Change Reason

Rigid Liner Present? No **LinerType** NO LINER

Liner Punctured? N/A **Sharp Objects?** No

Liner Lid Present? No **Sharp Objects Are Protected?** Yes

Liner Lid Deformed? N/A **Layers Of Confinement** 3

Fill Factor 100

Bag Closure Method Twisted and Taped

Liquids

Liquid Present? No **Internal Container with Liquid** No

Internal Container with Liquid 0 pints **LA Candidate** No

Liquid Between Liner & Drum 0 pints **Containerized Liquid**

Total Liquid Amount 0 pints **Containerized Liquid Amt** 0 pints

Other Liquids 0 pints **Comment**

Prohibited Liquids Present No **Comment**

Contents-Drum or Box

	Value	Comment		Value	Comment
Lead?	Yes, Rejected	sheeting	**Mercury Present?**	No	
Wet Cell Batteries?	No		**Explosives?**	No	
Prohibited Compressed Gases?	No		**PCBs Present?**	No	
Aerosol Cans?	No		**PCB Mass (lbs)**	0	
Non-Mixed Hazardous Waste Present?	No		**Sealed Containers Over 4L?**	Yes	30 gallon drum

Non-Radionuclide Pyrophoric Materials Present? No

Waste exhibiting the characteristics of Ignitability, Corrosivity or Reactivity Present? No

Wastes Incompatible with backfill, seal and panel closure materials, container and packaging materials,shipping container or other wastes? No

Impenetrable Dense Objects? Yes - Unacceptable Majority of the waste is impenetrable. Due to 30 gal drum encapsulated in cement & waste is lead sheeting.

Waste Material Items

Packaging Materials

Material Item	Quantity	Unit	Unit Wt(lbs)	Item Wt(lbs)
Drum plastic bag	2.000	EACH	1.000	2.000
55-GAL DRUM (17c)	1.000	EACH	59.000	59.000

Waste Items byWeight

Material Item	Quantity	Unit	Unit Wt(lbs)	Item Wt(lbs)
metal waste	1.000	EACH	40.000	40.000
30 gal drum	1.000	EACH	30.000	30.000

Batch Id RTR13-00242 **Container Id** 10145408 **Analysis Id** 0000092424

Waste Items by Volume

Material Item	Quantity	Unit	Unit Wt(lbs)	Item Wt(lbs)
Oil-Dri (Inside 55 gal drum)	40.000	PINTS	0.420	16.800
Uncured Cement	140.000	PINTS	3.000	420.000

Waste Parameters

Waste Parameter	Remaining Weight %	Actual Weight Lbs
Iron-based Metals/Alloys	0.000	70.000
Aluminum-based Metals/Alloys	0.000	0.000
Other metals	100.000	286.325
Other Inorganic Materials	0.000	436.800
Cellulosics	0.000	0.000
Rubber	0.000	0.000
Plastic (Waste Materials)	0.000	0.000
Inorganic matrix	0.000	0.000
Organic matrix	0.000	0.000
Soils/gravel	0.000	0.000
Steel (packaging materials)	0.000	142.000
Plastic (packaging materials)	0.000	2.000
Cellulosics Packaging	0.000	0.000

Analysis Esignature History

Esig Approval Id	User Id	Esignature Date	Comment
2640250	SJORDAN	16-OCT-2013 13:31	Rework
2639162	CHINKLE	14-OCT-2013 15:08	This batch is returned for rework. AK does not concur with the recommended IDC change for container 10145408. CHD 10/14/13
2638317	DGREEN	12-OCT-2013 12:03	

Batch Id RTR13-00242 **Container Id** 10330336 **Analysis Id** 0000092427

Container Type A drum, 55 Gallon Drum (17H) **Analysis Status** Pass

RTR Date 12-OCT-2013 13:58 **Gross Weight** 304.290 Lbs **Net Weight** 243.290 Lbs
Equipment Z-213-101 **Waste Matrix Code** S5126 **IDC** RF-300 Graphite Molds
Recording Id 1RTR13-00133 **Procedure Id** INST-OI-12 **Revision** 52 **Approval Level** SPM
Is Test Pattern Resolution Ok? Yes **Start Side** A **Replicate** No **OIO** No
Audio Visual Ok? Yes **Operator** DGREEN
Result Comment Waste consists of graphite molds.

Package

IDC Correct Yes **Recommended IDC** **Summary Category** S5000
Idc Change Reason
Rigid Liner Present? No **LinerType** NO LINER
Liner Punctured? N/A **Sharp Objects?** No
Liner Lid Present? No **Sharp Objects Are Protected?** Yes
Liner Lid Deformed? N/A **Layers Of Confinement** 2
Fill Factor 90
Bag Closure Method Twisted and Taped

Liquids

Liquid Present? No **Internal Container with Liquid** No
Internal Container with Liquid 0 pints **LA Candidate** No
Liquid Between Liner & Drum 0 pints **Containerized Liquid**
Total Liquid Amount 0 pints **Containerized Liquid Amt** 0 pints
Other Liquids 0 pints **Comment**
Prohibited Liquids Present No **Comment**

Contents-Drum or Box

	Value	Comment		Value	Comment
Lead?	No		Mercury Present?	No	
Wet Cell Batteries?	No		Explosives?	No	
Prohibited Compressed Gases?	No		PCBs Present?	No	
Aerosol Cans?	No		PCB Mass (lbs)	0	
Non-Mixed Hazardous Waste Present?	No		Sealed Containers Over 4L?	No	

Non-Radionuclide Pyrophoric Materials Present? No
Waste exhibiting the characteristics of Ignitability, Corrosivity or Reactivity Present? No
Wastes Incompatible with backfill, seal and panel closure materials, container and packaging materials,shipping container or other wastes? No
Impenetrable Dense Objects? No

Waste Material Items

Packaging Materials

Material Item	Quantity	Unit	Unit Wt(lbs)	Item Wt(lbs)
Drum plastic bag	2.000	EACH	1.000	2.000

Waste Items byWeight

Material Item	Quantity	Unit	Unit Wt(lbs)	Item Wt(lbs)
plastic sheeting & tyveks	1.000	EACH	10.000	10.000
coveralls	1.000	EACH	25.000	25.000
Cardboard liner	1.000	EACH	4.000	4.000

Waste Items by Volume

Material Item	Quantity	Unit	Unit Wt(lbs)	Item Wt(lbs)
Oil-Dri (Inside 55 gal drum)	2.000	PINTS	0.420	0.840

Batch Id RTR13-00242 **Container Id** 10330336 **Analysis Id** 0000092427

Waste Parameters

Waste Parameter	Remaining Weight %	Actual Weight Lbs
Iron-based Metals/Alloys	0.000	0.000
Aluminum-based Metals/Alloys	0.000	0.000
Other metals	0.000	0.000
Other Inorganic Materials	100.000	204.290
Cellulosics	0.000	29.000
Rubber	0.000	0.000
Plastic (Waste Materials)	0.000	10.000
Inorganic matrix	0.000	0.000
Organic matrix	0.000	0.000
Soils/gravel	0.000	0.000
Steel (packaging materials)	0.000	59.000
Plastic (packaging materials)	0.000	2.000
Cellulosics Packaging	0.000	0.000

Analysis Esignature History

Esig Approval Id	User Id	Esignature Date	Comment
2638343	DGREEN	12-OCT-2013 13:58	

Batch Id RTR13-00242 **Container Id** 10330376 **Analysis Id** 0000092429

Container Type A drum, 55 Gallon Drum (17H) **Analysis Status** Pass

RTR Date 12-OCT-2013 14:19
Equipment Z-213-101
Recording Id 1RTR13-00133
Is Test Pattern Resolution Ok? Yes
Audio Visual Ok? Yes
Result Comment Waste consists of concrete chunks.

Gross Weight 407.925 Lbs
Waste Matrix Code S5490
Procedure Id INST-OI-12
Start Side A

Net Weight 346.925 Lbs
IDC RF-960 Concrete, Asphalt, etc.
Revision 52
Replicate No
Operator DGREEN
Approval Level SPM
OIO No

Package

IDC Correct Yes
Recommended IDC
Summary Category S5000
Idc Change Reason

Rigid Liner Present? No
LinerType NO LINER
Liner Punctured? N/A
Sharp Objects? Yes
Liner Lid Present? No
Sharp Objects Are Protected? Yes
Liner Lid Deformed? N/A
Layers Of Confinement 2
Fill Factor 85
Bag Closure Method Twisted and Taped

Liquids

Liquid Present? Yes
Internal Container with Liquid 0 pints
Liquid Between Liner & Drum 0 pints
Total Liquid Amount .5 pints
Other Liquids .5 pints
Prohibited Liquids Present No
Internal Container with Liquid No
LA Candidate No
Containerized Liquid
Containerized Liquid Amt 0 pints
Comment in bagging at top of waste
Comment

Contents-Drum or Box

	Value	Comment
Lead?	No	
Wet Cell Batteries?	No	
Prohibited Compressed Gases?	No	
Aerosol Cans?	No	
Non-Mixed Hazardous Waste Present?	No	

	Value	Comment
Mercury Present?	No	
Explosives?	No	
PCBs Present?	No	
PCB Mass (lbs)	0	
Sealed Containers Over 4L?	No	

Non-Radionuclide Pyrophoric Materials Present? No
Waste exhibiting the characteristics of Ignitability, Corrosivity or Reactivity Present? No
Wastes Incompatible with backfill, seal and panel closure materials, container and packaging materials,shipping container or other wastes? No
Impenetrable Dense Objects? Yes - Unacceptable — Area 12-14" x 12-14" near the centre of the waste.

Waste Material Items

Packaging Materials

Material Item	Quantity	Unit	Unit Wt(lbs)	Item Wt(lbs)
Drum plastic bag	2.000	EACH	1.000	2.000

Waste Items byWeight

Material Item	Quantity	Unit	Unit Wt(lbs)	Item Wt(lbs)
rebar	1.000	EACH	25.000	25.000
paper & rags	1.000	EACH	12.000	12.000
Cardboard liner	1.000	EACH	4.000	4.000

Waste Items by Volume

Material Item	Quantity	Unit	Unit Wt(lbs)	Item Wt(lbs)
Oil-Dri (Inside 55 gal drum)	6.000	PINTS	0.420	2.520
Liquids for Other Inorganics	0.500	PINTS	1.000	0.500

Batch Id RTR13-00242 **Container Id** 10330376 **Analysis Id** 0000092429

Waste Parameters

Waste Parameter	Remaining Weight %	Actual Weight Lbs
Iron-based Metals/Alloys	0.000	25.000
Aluminum-based Metals/Alloys	0.000	0.000
Other metals	0.000	0.000
Other Inorganic Materials	100.000	305.925
Cellulosics	0.000	16.000
Rubber	0.000	0.000
Plastic (Waste Materials)	0.000	0.000
Inorganic matrix	0.000	0.000
Organic matrix	0.000	0.000
Soils/gravel	0.000	0.000
Steel (packaging materials)	0.000	59.000
Plastic (packaging materials)	0.000	2.000
Cellulosics Packaging	0.000	0.000

Analysis Esignature History

Esig Approval Id	User Id	Esignature Date	Comment
2638347	DGREEN	12-OCT-2013 14:19	

Batch Id RTR13-00242 **Container Id** 10230896 **Analysis Id** 0000092431

Container Type A drum, 55 Gallon Drum (17H) **Analysis Status** Pass

RTR Date 12-OCT-2013 14:45 **Gross Weight** 183.015 Lbs **Net Weight** 122.015 Lbs
Equipment Z-213-101 **Waste Matrix Code** S5300 **IDC** RF-330 Paper and Rags-Dry
Recording Id 1RTR13-00133 **Procedure Id** INST-OI-12 **Revision** 52 **Approval Level** SPM
Is Test Pattern Resolution Ok? Yes **Start Side** A **Replicate** No **OIO** No
Audio Visual Ok? Yes **Operator** DGREEN
Result Comment Waste consists of paper, rags, & coveralls.

Package

IDC Correct Yes **Recommended IDC** **Summary Category** S5000
Idc Change Reason
Rigid Liner Present? No **LinerType** NO LINER
Liner Punctured? N/A **Sharp Objects?** No
Liner Lid Present? No **Sharp Objects Are Protected?** Yes
Liner Lid Deformed? N/A **Layers Of Confinement** 3
Fill Factor 92
Bag Closure Method Twisted and Taped

Liquids

Liquid Present? Yes **Internal Container with Liquid** No
Internal Container with Liquid 0 pints **LA Candidate** No
Liquid Between Liner & Drum 0 pints **Containerized Liquid**
Total Liquid Amount .03 pints **Containerized Liquid Amt** 0 pints
Other Liquids .03 pints **Comment** in bagging
Prohibited Liquids Present No **Comment**

Contents-Drum or Box

	Value	Comment		Value	Comment
Lead?	No		**Mercury Present?**	No	
Wet Cell Batteries?	No		**Explosives?**	No	
Prohibited Compressed Gases?	No		**PCBs Present?**	No	
Aerosol Cans?	No		**PCB Mass (lbs)**	0	
Non-Mixed Hazardous Waste Present?	No		**Sealed Containers Over 4L?**	No	

Non-Radionuclide Pyrophoric Materials Present? No
Waste exhibiting the characteristics of Ignitability, Corrosivity or Reactivity Present? No
Wastes Incompatible with backfill, seal and panel closure materials, container and packaging materials,shipping container or other wastes? No
Impenetrable Dense Objects? No

Waste Material Items

Packaging Materials

Material Item	Quantity	Unit	Unit Wt(lbs)	Item Wt(lbs)
Drum plastic bag	2.000	EACH	1.000	2.000

Waste Items byWeight

Material Item	Quantity	Unit	Unit Wt(lbs)	Item Wt(lbs)
plastic waste	1.000	EACH	10.000	10.000
metal waste	1.000	EACH	15.000	15.000
Plastic bag for waste	1.000	EACH	0.250	0.250

Waste Items by Volume

Material Item	Quantity	Unit	Unit Wt(lbs)	Item Wt(lbs)
Vermiculite (95 gm/liter) .125 lb/pint	10.000	PINTS	0.125	1.250
Oil-Dri (Inside 55 gal drum)	5.000	PINTS	0.420	2.100
Liquids for Other Inorganics	0.030	PINTS	1.000	0.030

Batch Id RTR13-00242 **Container Id** 10230896 **Analysis Id** 0000092431

Waste Parameters

Waste Parameter	Remaining Weight %	Actual Weight Lbs
Iron-based Metals/Alloys	0.000	15.000
Aluminum-based Metals/Alloys	0.000	0.000
Other metals	0.000	0.000
Other Inorganic Materials	0.000	3.380
Cellulosics	100.000	93.385
Rubber	0.000	0.000
Plastic (Waste Materials)	0.000	10.250
Inorganic matrix	0.000	0.000
Organic matrix	0.000	0.000
Soils/gravel	0.000	0.000
Steel (packaging materials)	0.000	59.000
Plastic (packaging materials)	0.000	2.000
Cellulosics Packaging	0.000	0.000

Analysis Esignature History

Esig Approval Id	User Id	Esignature Date	Comment
2638360	DGREEN	12-OCT-2013 14:45	

Batch Id RTR13-00242 **Container Id** 10288555 **Analysis Id** 0000092432

Container Type A drum, 55 Gallon Drum (17H) **Analysis Status** Pass

RTR Date 12-OCT-2013 15:01 **Gross Weight** 130.095 Lbs **Net Weight** 70.095 Lbs

Equipment Z-213-101 **Waste Matrix Code** S5490 **IDC** RF-750 Pits 11 & 12 Debris

Recording Id 1RTR13-00133 **Procedure Id** INST-OI-12 **Revision** 52 **Approval Level** SPM

Is Test Pattern Resolution Ok? Yes **Start Side** A **Replicate** No **OIO** No

Audio Visual Ok? Yes **Operator** DGREEN

Result Comment Waste consists of paper & rags, & cardboard.

Package

IDC Correct Yes **Recommended IDC** **Summary Category** S5000

Idc Change Reason

Rigid Liner Present? No **LinerType** NO LINER

Liner Punctured? N/A **Sharp Objects?** No

Liner Lid Present? No **Sharp Objects Are Protected?** Yes

Liner Lid Deformed? N/A **Layers Of Confinement** 1

Fill Factor 70

Bag Closure Method Twisted and Taped

Liquids

Liquid Present? Yes **Internal Container with Liquid** Yes

Internal Container with Liquid .18 pints **LA Candidate** No

Liquid Between Liner & Drum 0 pints **Containerized Liquid**

Total Liquid Amount .18 pints **Containerized Liquid Amt** 0 pints

Other Liquids 0 pints **Comment** .18 pt. in a couple small poly bottles at the bottom of the waste - neither contains > 60 mL.

Prohibited Liquids Present No **Comment**

Contents-Drum or Box

	Value	Comment		Value	Comment
Lead?	No		**Mercury Present?**	No	
Wet Cell Batteries?	No		**Explosives?**	No	
Prohibited Compressed Gases?	No		**PCBs Present?**	No	
Aerosol Cans?	No		**PCB Mass (lbs)**	0	
Non-Mixed Hazardous Waste Present?	No		**Sealed Containers Over 4L?**	No	

Non-Radionuclide Pyrophoric Materials Present? No

Waste exhibiting the characteristics of Ignitability, Corrosivity or Reactivity Present? No

Wastes Incompatible with backfill, seal and panel closure materials, container and packaging materials,shipping container or other wastes? No

Impenetrable Dense Objects? No

Waste Material Items

Packaging Materials

Material Item	Quantity	Unit	Unit Wt(lbs)	Item Wt(lbs)
Drum plastic bag	1.000	EACH	1.000	1.000

Waste Items byWeight

Material Item	Quantity	Unit	Unit Wt(lbs)	Item Wt(lbs)
plastic waste	1.000	EACH	6.000	6.000

Waste Items by Volume

Material Item	Quantity	Unit	Unit Wt(lbs)	Item Wt(lbs)
Oil-Dri (Inside 55 gal drum)	1.000	PINTS	0.420	0.420
Liquids for Other Inorganics	0.180	PINTS	1.000	0.180

Batch Id RTR13-00242 **Container Id** 10288555 **Analysis Id** 0000092432

Waste Parameters

Waste Parameter	Remaining Weight %	Actual Weight Lbs
Iron-based Metals/Alloys	0.000	0.000
Aluminum-based Metals/Alloys	0.000	0.000
Other metals	0.000	0.000
Other Inorganic Materials	0.000	0.600
Cellulosics	100.000	63.495
Rubber	0.000	0.000
Plastic (Waste Materials)	0.000	6.000
Inorganic matrix	0.000	0.000
Organic matrix	0.000	0.000
Soils/gravel	0.000	0.000
Steel (packaging materials)	0.000	59.000
Plastic (packaging materials)	0.000	1.000
Cellulosics Packaging	0.000	0.000

Analysis Esignature History

Esig Approval Id	User Id	Esignature Date	Comment
2638367	DGREEN	12-OCT-2013 15:01	

Batch Id RTR13-00242 **Container Id** 10415942 **Analysis Id** 0000092436

Container Type 425 drum, 55 Gallon (UN1A2/X425/S), DOT/WIPP approved **Analysis Status** Pass

RTR Date 12-OCT-2013 16:58 **Gross Weight** 474.075 Lbs **Net Weight** 399.075 Lbs

Equipment Z-213-101 **Waste Matrix Code** S3114 **IDC** RF-003 Organic Setups, Oil Solids

Recording Id 1RTR13-00133 **Procedure Id** INST-OI-12 **Revision** 52 **Approval Level** SPM

Is Test Pattern Resolution Ok? Yes **Start Side** A **Replicate** No **OIO** No

Audio Visual Ok? Yes **Operator** DGREEN

Result Comment Waste consists of sludge.

Package

IDC Correct Yes **Recommended IDC** **Summary Category** S3000

Idc Change Reason

Rigid Liner Present? Yes **LinerType** TYPE 2

Liner Punctured? Yes **Sharp Objects?** No

Liner Lid Present? No **Sharp Objects Are Protected?** Yes

Liner Lid Deformed? N/A **Layers Of Confinement** 0

Fill Factor 90

Bag Closure Method No Bags

Liquids

Liquid Present? Yes **Internal Container with Liquid** No

Internal Container with Liquid 0 pints **LA Candidate** No

Liquid Between Liner & Drum 0 pints **Containerized Liquid**

Total Liquid Amount 3 pints **Containerized Liquid Amt** 0 pints

Other Liquids 3 pints **Comment** In the bottom of the waste

Prohibited Liquids Present Yes **Comment** PCB's

Contents-Drum or Box

	Value	Comment		Value	Comment
Lead?	No		**Mercury Present?**	No	
Wet Cell Batteries?	No		**Explosives?**	No	
Prohibited Compressed Gases?	No		**PCBs Present?**	Yes - Prohibited	liquid
Aerosol Cans?	No		**PCB Mass (lbs)**	399.08	
Non-Mixed Hazardous Waste Present?	No		**Sealed Containers Over 4L?**	No	

Non-Radionuclide Pyrophoric Materials Present? No

Waste exhibiting the characteristics of Ignitability, Corrosivity or Reactivity Present? No

Wastes Incompatible with backfill, seal and panel closure materials, container and packaging materials,shipping container or other wastes? No

Impenetrable Dense Objects? No

Waste Material Items

Packaging Materials

Material Item	Quantity	Unit	Unit Wt(lbs)	Item Wt(lbs)
90 mil liner	1.000	EACH	16.000	16.000

Waste Items byWeight

Material Item	Quantity	Unit	Unit Wt(lbs)	Item Wt(lbs)

Waste Items by Volume

Material Item	Quantity	Unit	Unit Wt(lbs)	Item Wt(lbs)
Liquids for Organic Matrix	3.000	PINTS	1.000	3.000

Batch Id RTR13-00242 **Container Id** 10415942 **Analysis Id** 0000092436

Waste Parameters

Waste Parameter	Remaining Weight %	Actual Weight Lbs
Iron-based Metals/Alloys	0.000	0.000
Aluminum-based Metals/Alloys	0.000	0.000
Other metals	0.000	0.000
Other Inorganic Materials	0.000	0.000
Cellulosics	0.000	0.000
Rubber	0.000	0.000
Plastic (Waste Materials)	0.000	0.000
Inorganic matrix	0.000	0.000
Organic matrix	100.000	399.075
Soils/gravel	0.000	0.000
Steel (packaging materials)	0.000	59.000
Plastic (packaging materials)	0.000	16.000
Cellulosics Packaging	0.000	0.000

Analysis Esignature History

Esig Approval Id	User Id	Esignature Date	Comment
2638391	DGREEN	12-OCT-2013 16:58	

Batch Id RTR13-00242 **Container Id** 10408625 **Analysis Id** 0000092438

Container Type A drum, 55 Gallon Drum (17H) **Analysis Status** Pass

RTR Date 12-OCT-2013 17:15 **Gross Weight** 456.435 Lbs **Net Weight** 381.435 Lbs

Equipment Z-213-101 **Waste Matrix Code** S3114 **IDC** RF-003 Organic Setups, Oil Solids

Recording Id 1RTR13-00133 **Procedure Id** INST-OI-12 **Revision** 52 **Approval Level** SPM

Is Test Pattern Resolution Ok? Yes **Start Side** A **Replicate** No **OIO** No

Audio Visual Ok? Yes **Operator** DGREEN

Result Comment Waste consists of sludge.

---Package---

IDC Correct Yes **Recommended IDC** **Summary Category** S3000

Idc Change Reason

Rigid Liner Present? Yes **LinerType** TYPE 1

Liner Punctured? Yes **Sharp Objects?** No

Liner Lid Present? No **Sharp Objects Are Protected?** Yes

Liner Lid Deformed? N/A **Layers Of Confinement** 0

Fill Factor 87

Bag Closure Method No Bags

---Liquids---

Liquid Present? No **Internal Container with Liquid** No

Internal Container with Liquid 0 pints **LA Candidate** No

Liquid Between Liner & Drum 0 pints **Containerized Liquid**

Total Liquid Amount 0 pints **Containerized Liquid Amt** 0 pints

Other Liquids 0 pints **Comment**

Prohibited Liquids Present No **Comment**

---Contents-Drum or Box---

	Value	Comment		Value	Comment
Lead?	Yes, Acceptable	TID	**Mercury Present?**	No	
Wet Cell Batteries?	No		**Explosives?**	No	
Prohibited Compressed Gases?	No		**PCBs Present?**	Yes - Acceptable	no liquid
Aerosol Cans?	No		**PCB Mass (lbs)**	381.44	
Non-Mixed Hazardous Waste Present?	No		**Sealed Containers Over 4L?**	No	

Non-Radionuclide Pyrophoric Materials Present? No

Waste exhibiting the characteristics of Ignitability, Corrosivity or Reactivity Present? No

Wastes Incompatible with backfill, seal and panel closure materials, container and packaging materials,shipping container or other wastes? No

Impenetrable Dense Objects? No

---Waste Material Items---

---Packaging Materials---

Material Item	Quantity	Unit	Unit Wt(lbs)	Item Wt(lbs)
90 mil liner	1.000	EACH	16.000	16.000

---Waste Items byWeight---

Material Item	Quantity	Unit	Unit Wt(lbs)	Item Wt(lbs)
Lead TID	1.000	EACH	0.100	0.100

---Waste Items by Volume---

Material Item	Quantity	Unit	Unit Wt(lbs)	Item Wt(lbs)

Batch Id RTR13-00242 **Container Id** 10408625 **Analysis Id** 0000092438

Waste Parameters

Waste Parameter	Remaining Weight %	Actual Weight Lbs
Iron-based Metals/Alloys	0.000	0.000
Aluminum-based Metals/Alloys	0.000	0.000
Other metals	0.000	0.100
Other Inorganic Materials	0.000	0.000
Cellulosics	0.000	0.000
Rubber	0.000	0.000
Plastic (Waste Materials)	0.000	0.000
Inorganic matrix	0.000	0.000
Organic matrix	100.000	381.335
Soils/gravel	0.000	0.000
Steel (packaging materials)	0.000	59.000
Plastic (packaging materials)	0.000	16.000
Cellulosics Packaging	0.000	0.000

Analysis Esignature History

Esig Approval Id	User Id	Esignature Date	Comment
2638395	DGREEN	12-OCT-2013 17:15	

Batch Id RTR13-00242 **Container Id** 10408608 **Analysis Id** 0000092440

Container Type A drum, 55 Gallon Drum (17H) **Analysis Status** Pass

RTR Date 12-OCT-2013 17:28 **Gross Weight** 575.505 Lbs **Net Weight** 500.505 Lbs

Equipment Z-213-101 **Waste Matrix Code** S3114 **IDC** RF-003 Organic Setups, Oil Solids

Recording Id 1RTR13-00133 **Procedure Id** INST-OI-12 **Revision** 52 **Approval Level** SPM

Is Test Pattern Resolution Ok? Yes **Start Side** A **Replicate** No **OIO** No

Audio Visual Ok? Yes **Operator** DGREEN

Result Comment Waste consists of sludge.

Package

IDC Correct Yes **Recommended IDC** **Summary Category** S3000

Idc Change Reason

Rigid Liner Present? Yes **LinerType** TYPE 1

Liner Punctured? Yes **Sharp Objects?** No

Liner Lid Present? No **Sharp Objects Are Protected?** Yes

Liner Lid Deformed? N/A **Layers Of Confinement** 0

Fill Factor 87

Bag Closure Method No Bags

Liquids

Liquid Present? No **Internal Container with Liquid** No

Internal Container with Liquid 0 pints **LA Candidate** No

Liquid Between Liner & Drum 0 pints **Containerized Liquid**

Total Liquid Amount 0 pints **Containerized Liquid Amt** 0 pints

Other Liquids 0 pints **Comment**

Prohibited Liquids Present No **Comment**

Contents-Drum or Box

	Value	Comment		Value	Comment
Lead?	No		**Mercury Present?**	No	
Wet Cell Batteries?	No		**Explosives?**	No	
Prohibited Compressed Gases?	No		**PCBs Present?**	Yes - Acceptable	no liquid
Aerosol Cans?	No		**PCB Mass (lbs)**	500.51	
Non-Mixed Hazardous Waste Present?	No		**Sealed Containers Over 4L?**	No	

Non-Radionuclide Pyrophoric Materials Present? No

Waste exhibiting the characteristics of Ignitability, Corrosivity or Reactivity Present? No

Wastes Incompatible with backfill, seal and panel closure materials, container and packaging materials,shipping container or other wastes? No

Impenetrable Dense Objects? No

Waste Material Items

Packaging Materials

Material Item	Quantity	Unit	Unit Wt(lbs)	Item Wt(lbs)
90 mil liner	1.000	EACH	16.000	16.000

Waste Items byWeight

Material Item	Quantity	Unit	Unit Wt(lbs)	Item Wt(lbs)

Waste Items by Volume

Material Item	Quantity	Unit	Unit Wt(lbs)	Item Wt(lbs)

Batch Id RTR13-00242 **Container Id** 10408608 **Analysis Id** 0000092440

Waste Parameters

Waste Parameter	Remaining Weight %	Actual Weight Lbs
Iron-based Metals/Alloys	0.000	0.000
Aluminum-based Metals/Alloys	0.000	0.000
Other metals	0.000	0.000
Other Inorganic Materials	0.000	0.000
Cellulosics	0.000	0.000
Rubber	0.000	0.000
Plastic (Waste Materials)	0.000	0.000
Inorganic matrix	0.000	0.000
Organic matrix	100.000	500.505
Soils/gravel	0.000	0.000
Steel (packaging materials)	0.000	59.000
Plastic (packaging materials)	0.000	16.000
Cellulosics Packaging	0.000	0.000

Analysis Esignature History

Esig Approval Id	User Id	Esignature Date	Comment
2638402	DGREEN	12-OCT-2013 17:28	

Batch Id RTR13-00242 **Container Id** 10408625 **Analysis Id** 0000092441

Container Type A drum, 55 Gallon Drum (17H) **Analysis Status** Pass

RTR Date 12-OCT-2013 17:51 **Gross Weight** 456.435 Lbs **Net Weight** 381.435 Lbs

Equipment Z-213-101 **Waste Matrix Code** S3114 **IDC** RF-003 Organic Setups, Oil Solids

Recording Id 1RTR13-00133 **Procedure Id** INST-OI-12 **Revision** 52 **Approval Level** SPM

Is Test Pattern Resolution Ok? Yes **Start Side** A **Replicate** No **OIO** Yes

Audio Visual Ok? Yes **Operator** SPHILLIPS

Result Comment This drum contains Sludge!

Package

IDC Correct Yes **Recommended IDC** **Summary Category** S3000

Idc Change Reason

Rigid Liner Present? Yes **LinerType** TYPE I

Liner Punctured? Yes **Sharp Objects?** No

Liner Lid Present? No **Sharp Objects Are Protected?** Yes

Liner Lid Deformed? N/A **Layers Of Confinement** 0

Fill Factor 95

Bag Closure Method Twisted and Taped

Liquids

Liquid Present? No **Internal Container with Liquid** No

Internal Container with Liquid 0 pints **LA Candidate** No

Liquid Between Liner & Drum 0 pints **Containerized Liquid**

Total Liquid Amount 0 pints **Containerized Liquid Amt** 0 pints

Other Liquids 0 pints **Comment**

Prohibited Liquids Present No **Comment**

Contents-Drum or Box

	Value	Comment		Value	Comment
Lead?	Yes, Acceptable	lead	**Mercury Present?**	No	
Wet Cell Batteries?	No		**Explosives?**	No	
Prohibited Compressed Gases?	No		**PCBs Present?**	Yes - Acceptable	PCB Waste
Aerosol Cans?	No		**PCB Mass (lbs)**	381.44	
Non-Mixed Hazardous Waste Present?	No		**Sealed Containers Over 4L?**	No	

Non-Radionuclide Pyrophoric Materials Present? No

Waste exhibiting the characteristics of Ignitability, Corrosivity or Reactivity Present? No

Wastes Incompatible with backfill, seal and panel closure materials, container and packaging materials,shipping container or other wastes? No

Impenetrable Dense Objects? No

Waste Material Items

Packaging Materials

Material Item	Quantity	Unit	Unit Wt(lbs)	Item Wt(lbs)
90 mil liner	1.000	EACH	16.000	16.000

Waste Items byWeight

Material Item	Quantity	Unit	Unit Wt(lbs)	Item Wt(lbs)
lead	1.000	EACH	0.100	0.100

Waste Items by Volume

Material Item	Quantity	Unit	Unit Wt(lbs)	Item Wt(lbs)

Batch Id RTR13-00242 **Container Id** 10408625 **Analysis Id** 0000092441

Waste Parameters

Waste Parameter	Remaining Weight %	Actual Weight Lbs
Iron-based Metals/Alloys	0.000	0.000
Aluminum-based Metals/Alloys	0.000	0.000
Other metals	0.000	0.100
Other Inorganic Materials	0.000	0.000
Cellulosics	0.000	0.000
Rubber	0.000	0.000
Plastic (Waste Materials)	0.000	0.000
Inorganic matrix	0.000	0.000
Organic matrix	100.000	381.335
Soils/gravel	0.000	0.000
Steel (packaging materials)	0.000	59.000
Plastic (packaging materials)	0.000	16.000
Cellulosics Packaging	0.000	0.000

RTR Independent Observation

Obsolete	Performed	User Name	Checklist	Answer
No	08-NOV-2013 12:35	KHUGHES	1.Was an independent observation performed?	Yes
			2.Were all items on the recording media identified correctly in WTS?	Yes
			3.Do you agree with the operator?	No

Comment No significant differences between original and OIO

Independent Observation Esignature History

Esig Approval Id	User Id	Esignature Date	Comment
2651219	KHUGHES	08-NOV-2013 12:35	valid

Analysis Esignature History

Esig Approval Id	User Id	Esignature Date	Comment
2638404	SPHILLIPS	12-OCT-2013 17:51	

Batch Id RTR13-00242 **Container Id** 10320693 **Analysis Id** 0000092442

Container Type 425 drum, 55 Gallon (UN1A2/X425/S), DOT/WIPP approved **Analysis Status** Pass

RTR Date 13-OCT-2013 10:14 **Gross Weight** 339.570 Lbs **Net Weight** 280.570 Lbs

Equipment Z-213-101 **Waste Matrix Code** S5490 **IDC** RF-750 Pits 11 & 12 Debris

Recording Id 1RTR13-00133 **Procedure Id** INST-OI-12 **Revision** 52 **Approval Level** SPM

Is Test Pattern Resolution Ok? Yes **Start Side** A **Replicate** No **OIO** No

Audio Visual Ok? Yes **Operator** MRICKS

Result Comment 30 gal drum inside 55 gal drum appears to contain broken pieces of cinder block.

Package

IDC Correct Yes **Recommended IDC** **Summary Category** S5000

Idc Change Reason

Rigid Liner Present? No **LinerType** NO LINER

Liner Punctured? N/A **Sharp Objects?** No

Liner Lid Present? No **Sharp Objects Are Protected?** Yes

Liner Lid Deformed? N/A **Layers Of Confinement** 1

Fill Factor 60

Bag Closure Method No Bags

Liquids

Liquid Present? No **Internal Container with Liquid** No

Internal Container with Liquid 0 pints **LA Candidate** No

Liquid Between Liner & Drum 0 pints **Containerized Liquid**

Total Liquid Amount 0 pints **Containerized Liquid Amt** 0 pints

Other Liquids 0 pints **Comment**

Prohibited Liquids Present No **Comment**

Contents-Drum or Box

	Value	Comment		Value	Comment
Lead?	No		**Mercury Present?**	No	
Wet Cell Batteries?	No		**Explosives?**	No	
Prohibited Compressed Gases?	No		**PCBs Present?**	No	
Aerosol Cans?	No		**PCB Mass (lbs)**	0	
Non-Mixed Hazardous Waste Present?	No		**Sealed Containers Over 4L?**	Yes	30 gal drum

Non-Radionuclide Pyrophoric Materials Present? No

Waste exhibiting the characteristics of Ignitability, Corrosivity or Reactivity Present? No

Wastes Incompatible with backfill, seal and panel closure materials, container and packaging materials,shipping container or other wastes? No

Impenetrable Dense Objects? No

Waste Material Items

Packaging Materials

Material Item	Quantity	Unit	Unit Wt(lbs)	Item Wt(lbs)

Waste Items byWeight

Material Item	Quantity	Unit	Unit Wt(lbs)	Item Wt(lbs)
30 gal drum	1.000	EACH	30.000	30.000

Waste Items by Volume

Material Item	Quantity	Unit	Unit Wt(lbs)	Item Wt(lbs)

Batch Id RTR13-00242 **Container Id** 10320693 **Analysis Id** 0000092442

Waste Parameters

Waste Parameter	Remaining Weight %	Actual Weight Lbs
Iron-based Metals/Alloys	0.000	30.000
Aluminum-based Metals/Alloys	0.000	0.000
Other metals	0.000	0.000
Other Inorganic Materials	100.000	250.570
Cellulosics	0.000	0.000
Rubber	0.000	0.000
Plastic (Waste Materials)	0.000	0.000
Inorganic matrix	0.000	0.000
Organic matrix	0.000	0.000
Soils/gravel	0.000	0.000
Steel (packaging materials)	0.000	59.000
Plastic (packaging materials)	0.000	0.000
Cellulosics Packaging	0.000	0.000

Analysis Esignature History

Esig Approval Id	User Id	Esignature Date	Comment
2638476	MRICKS	13-OCT-2013 10:14	

Batch Id RTR13-00242 **Container Id** 10221324 **Analysis Id** 0000092443

Container Type A drum, 55 Gallon Drum (17H) **Analysis Status** Pass

RTR Date 13-OCT-2013 10:29 **Gross Weight** 513.765 Lbs **Net Weight** 437.765 Lbs

Equipment Z-213-101 **Waste Matrix Code** S3121 **IDC** RF-001 First Stage Sludge

Recording Id 1RTR13-00133 **Procedure Id** INST-OI-12 **Revision** 52 **Approval Level** SPM

Is Test Pattern Resolution Ok? Yes **Start Side** A **Replicate** No **OIO** No

Audio Visual Ok? Yes **Operator** MRICKS

Result Comment Drum appears to contain sludge.

Package

IDC Correct Yes **Recommended IDC** **Summary Category** S3000

Idc Change Reason

Rigid Liner Present? Yes **LinerType** TYPE 1

Liner Punctured? Yes **Sharp Objects?** No

Liner Lid Present? Yes **Sharp Objects Are Protected?** Yes

Liner Lid Deformed? No **Layers Of Confinement** 1

Fill Factor 95

Bag Closure Method Twisted and Taped

Liquids

Liquid Present? Yes **Internal Container with Liquid** No

Internal Container with Liquid 0 pints **LA Candidate** No

Liquid Between Liner & Drum 0 pints **Containerized Liquid**

Total Liquid Amount 2.5 pints **Containerized Liquid Amt** 0 pints

Other Liquids 2.5 pints **Comment** 2.5 pints estimated in the bottom in the waste.

Prohibited Liquids Present No **Comment**

Contents-Drum or Box

	Value	Comment		Value	Comment
Lead?	No		**Mercury Present?**	No	
Wet Cell Batteries?	No		**Explosives?**	No	
Prohibited Compressed Gases?	No		**PCBs Present?**	No	
Aerosol Cans?	No		**PCB Mass (lbs)**	0	
Non-Mixed Hazardous Waste Present?	No		**Sealed Containers Over 4L?**	No	

Non-Radionuclide Pyrophoric Materials Present? No

Waste exhibiting the characteristics of Ignitability, Corrosivity or Reactivity Present? No

Wastes Incompatible with backfill, seal and panel closure materials, container and packaging materials,shipping container or other wastes? No

Impenetrable Dense Objects? No

Waste Material Items

Packaging Materials

Material Item	Quantity	Unit	Unit Wt(lbs)	Item Wt(lbs)
90 mil liner	1.000	EACH	16.000	16.000
Drum plastic bag	1.000	EACH	1.000	1.000

Waste Items byWeight

Material Item	Quantity	Unit	Unit Wt(lbs)	Item Wt(lbs)

Waste Items by Volume

Material Item	Quantity	Unit	Unit Wt(lbs)	Item Wt(lbs)
Liquids for Inorganic Matrix	2.500	PINTS	1.000	2.500

Batch Id RTR13-00242 **Container Id** 10221324 **Analysis Id** 0000092443

Waste Parameters

Waste Parameter	Remaining Weight %	Actual Weight Lbs
Iron-based Metals/Alloys	0.000	0.000
Aluminum-based Metals/Alloys	0.000	0.000
Other metals	0.000	0.000
Other Inorganic Materials	0.000	0.000
Cellulosics	0.000	0.000
Rubber	0.000	0.000
Plastic (Waste Materials)	0.000	0.000
Inorganic matrix	100.000	437.765
Organic matrix	0.000	0.000
Soils/gravel	0.000	0.000
Steel (packaging materials)	0.000	59.000
Plastic (packaging materials)	0.000	17.000
Cellulosics Packaging	0.000	0.000

Analysis Esignature History

Esig Approval Id	User Id	Esignature Date	Comment
2638498	MRICKS	13-OCT-2013 10:29	

Batch Id RTR13-00242 **Container Id** 10407548 **Analysis Id** 0000092445

Container Type 425 drum, 55 Gallon (UN1A2/X425/S), DOT/WIPP approved **Analysis Status** Pass

RTR Date 13-OCT-2013 10:52 **Gross Weight** 465.255 Lbs **Net Weight** 390.255 Lbs

Equipment Z-213-101 **Waste Matrix Code** S3114 **IDC** RF-003 Organic Setups, Oil Solids

Recording Id 1RTR13-00133 **Procedure Id** INST-OI-12 **Revision** 52 **Approval Level** SPM

Is Test Pattern Resolution Ok? Yes **Start Side** A **Replicate** No **OIO** No

Audio Visual Ok? Yes **Operator** MRICKS

Result Comment Drum appears to contain sludge.

Package

IDC Correct Yes **Recommended IDC** **Summary Category** S3000

Idc Change Reason

Rigid Liner Present? Yes **LinerType** TYPE 1

Liner Punctured? Yes **Sharp Objects?** No

Liner Lid Present? No **Sharp Objects Are Protected?** Yes

Liner Lid Deformed? N/A **Layers Of Confinement** 0

Fill Factor 91

Bag Closure Method No Bags

Liquids

Liquid Present? Yes **Internal Container with Liquid** No

Internal Container with Liquid 0 pints **LA Candidate** No

Liquid Between Liner & Drum 0 pints **Containerized Liquid**

Total Liquid Amount .5 pints **Containerized Liquid Amt** 0 pints

Other Liquids .5 pints **Comment** appears to be a small amount of liquid on top of the waste

Prohibited Liquids Present Yes **Comment** PCB

Contents-Drum or Box

	Value	Comment		Value	Comment
Lead?	No		**Mercury Present?**	No	
Wet Cell Batteries?	No		**Explosives?**	No	
Prohibited Compressed Gases?	No		**PCBs Present?**	Yes - Prohibited	liquid on top of waste
Aerosol Cans?	No		**PCB Mass (lbs)**	390.26	
Non-Mixed Hazardous Waste Present?	No		**Sealed Containers Over 4L?**	No	

Non-Radionuclide Pyrophoric Materials Present? No

Waste exhibiting the characteristics of Ignitability, Corrosivity or Reactivity Present? No

Wastes Incompatible with backfill, seal and panel closure materials, container and packaging materials,shipping container or other wastes? No

Impenetrable Dense Objects? No

Waste Material Items

Packaging Materials

Material Item	Quantity	Unit	Unit Wt(lbs)	Item Wt(lbs)
90 mil liner	1.000	EACH	16.000	16.000

Waste Items byWeight

Material Item	Quantity	Unit	Unit Wt(lbs)	Item Wt(lbs)
bag	1.000	EACH	1.000	1.000

Waste Items by Volume

Material Item	Quantity	Unit	Unit Wt(lbs)	Item Wt(lbs)
Liquids for Organic Matrix	0.500	PINTS	1.000	0.500

Batch Id RTR13-00242 **Container Id** 10407548 **Analysis Id** 0000092445

Waste Parameters

Waste Parameter	Remaining Weight %	Actual Weight Lbs
Iron-based Metals/Alloys	0.000	0.000
Aluminum-based Metals/Alloys	0.000	0.000
Other metals	0.000	0.000
Other Inorganic Materials	0.000	0.000
Cellulosics	0.000	0.000
Rubber	0.000	0.000
Plastic (Waste Materials)	0.000	1.000
Inorganic matrix	0.000	0.000
Organic matrix	100.000	389.255
Soils/gravel	0.000	0.000
Steel (packaging materials)	0.000	59.000
Plastic (packaging materials)	0.000	16.000
Cellulosics Packaging	0.000	0.000

Analysis Esignature History

Esig Approval Id	User Id	Esignature Date	Comment
2638510	MRICKS	13-OCT-2013 10:52	

Batch Id RTR13-00242 **Container Id** 10415417 **Analysis Id** 0000092447

Container Type A drum, 55 Gallon Drum (17H) **Analysis Status** Pass

RTR Date 13-OCT-2013 11:25 **Gross Weight** 467.460 Lbs **Net Weight** 392.460 Lbs

Equipment Z-213-101 **Waste Matrix Code** S3114 **IDC** RF-003 Organic Setups, Oil Solids

Recording Id 1RTR13-00133 **Procedure Id** INST-OI-12 **Revision** 52 **Approval Level** SPM

Is Test Pattern Resolution Ok? Yes **Start Side** A **Replicate** No **OIO** No

Audio Visual Ok? Yes **Operator** MRICKS

Result Comment Drum appears to contain sludge.

Package

IDC Correct Yes **Recommended IDC** **Summary Category** S3000

Idc Change Reason

Rigid Liner Present? Yes **LinerType** TYPE 2

Liner Punctured? Yes **Sharp Objects?** No

Liner Lid Present? Yes **Sharp Objects Are Protected?** Yes

Liner Lid Deformed? No **Layers Of Confinement** 0

Fill Factor 92

Bag Closure Method No Bags

Liquids

Liquid Present? Yes **Internal Container with Liquid** No

Internal Container with Liquid 0 pints **LA Candidate** No

Liquid Between Liner & Drum 0 pints **Containerized Liquid**

Total Liquid Amount .75 pints **Containerized Liquid Amt** 0 pints

Other Liquids .75 pints **Comment** estimated .75 pints liquid on top of the bagging

Prohibited Liquids Present Yes **Comment** PCB

Contents-Drum or Box

	Value	Comment		Value	Comment
Lead?	No		**Mercury Present?**	No	
Wet Cell Batteries?	No		**Explosives?**	No	
Prohibited Compressed Gases?	No		**PCBs Present?**	Yes - Prohibited	liquid
Aerosol Cans?	No		**PCB Mass (lbs)**	392.46	
Non-Mixed Hazardous Waste Present?	No		**Sealed Containers Over 4L?**	No	

Non-Radionuclide Pyrophoric Materials Present? No

Waste exhibiting the characteristics of Ignitability, Corrosivity or Reactivity Present? No

Wastes Incompatible with backfill, seal and panel closure materials, container and packaging materials,shipping container or other wastes? No

Impenetrable Dense Objects? No

Waste Material Items

Packaging Materials

Material Item	Quantity	Unit	Unit Wt(lbs)	Item Wt(lbs)
90 mil liner	1.000	EACH	16.000	16.000

Waste Items byWeight

Material Item	Quantity	Unit	Unit Wt(lbs)	Item Wt(lbs)
bag	1.000	EACH	1.000	1.000

Waste Items by Volume

Material Item	Quantity	Unit	Unit Wt(lbs)	Item Wt(lbs)
Liquids for Organic Matrix	0.750	PINTS	1.000	0.750

Batch Id RTR13-00242 **Container Id** 10415417 **Analysis Id** 0000092447

Waste Parameters

Waste Parameter	Remaining Weight %	Actual Weight Lbs
Iron-based Metals/Alloys	0.000	0.000
Aluminum-based Metals/Alloys	0.000	0.000
Other metals	0.000	0.000
Other Inorganic Materials	0.000	0.000
Cellulosics	0.000	0.000
Rubber	0.000	0.000
Plastic (Waste Materials)	0.000	1.000
Inorganic matrix	0.000	0.000
Organic matrix	100.000	391.460
Soils/gravel	0.000	0.000
Steel (packaging materials)	0.000	59.000
Plastic (packaging materials)	0.000	16.000
Cellulosics Packaging	0.000	0.000

Analysis Esignature History

Esig Approval Id	User Id	Esignature Date	Comment
2638520	MRICKS	13-OCT-2013 11:26	

Batch Id RTR13-00242 **Container Id** 10501175 **Analysis Id** 0000092449

Container Type 7A85 85 Gallon Open Head drum, DOT 7A **Analysis Status** Pass

RTR Date 13-OCT-2013 12:15 **Gross Weight** 542.430 Lbs **Net Weight** 401.430 Lbs

Equipment Z-213-101 **Waste Matrix Code** S3121 **IDC** RF-002 Second Stage Sludge

Recording Id 1RTR13-00133 **Procedure Id** INST-OI-12 **Revision** 52 **Approval Level** SPM

Is Test Pattern Resolution Ok? Yes **Start Side** A **Replicate** No **OIO** No

Audio Visual Ok? Yes **Operator** MRICKS

Result Comment Overpacked partially intact 55 gal drum appears to contain sludge.

Package

IDC Correct Yes **Recommended IDC** **Summary Category** S3000

Idc Change Reason

Rigid Liner Present? No **LinerType** NO LINER

Liner Punctured? N/A **Sharp Objects?** No

Liner Lid Present? No **Sharp Objects Are Protected?** Yes

Liner Lid Deformed? N/A **Layers Of Confinement** 2

Fill Factor 94

Bag Closure Method Twisted and Taped

Liquids

Liquid Present? No **Internal Container with Liquid** No

Internal Container with Liquid 0 pints **LA Candidate** No

Liquid Between Liner & Drum 0 pints **Containerized Liquid**

Total Liquid Amount 0 pints **Containerized Liquid Amt** 0 pints

Other Liquids 0 pints **Comment**

Prohibited Liquids Present No **Comment**

Contents-Drum or Box

	Value	Comment		Value	Comment
Lead?	No		**Mercury Present?**	No	
Wet Cell Batteries?	No		**Explosives?**	No	
Prohibited Compressed Gases?	No		**PCBs Present?**	No	
Aerosol Cans?	No		**PCB Mass (lbs)**	0	
Non-Mixed Hazardous Waste Present?	No		**Sealed Containers Over 4L?**	No	

Non-Radionuclide Pyrophoric Materials Present? No

Waste exhibiting the characteristics of Ignitability, Corrosivity or Reactivity Present? No

Wastes Incompatible with backfill, seal and panel closure materials, container and packaging materials,shipping container or other wastes? No

Impenetrable Dense Objects? No

Waste Material Items

Packaging Materials

Material Item	Quantity	Unit	Unit Wt(lbs)	Item Wt(lbs)
Drum plastic bag	2.000	EACH	1.000	2.000
55-GAL DRUM (17c)	1.000	EACH	59.000	59.000

Waste Items byWeight

Material Item	Quantity	Unit	Unit Wt(lbs)	Item Wt(lbs)
bag	1.000	EACH	1.000	1.000

Waste Items by Volume

Material Item	Quantity	Unit	Unit Wt(lbs)	Item Wt(lbs)

Batch Id RTR13-00242 **Container Id** 10501175 **Analysis Id** 0000092449

Waste Parameters

Waste Parameter	Remaining Weight %	Actual Weight Lbs
Iron-based Metals/Alloys	0.000	0.000
Aluminum-based Metals/Alloys	0.000	0.000
Other metals	0.000	0.000
Other Inorganic Materials	0.000	0.000
Cellulosics	0.000	0.000
Rubber	0.000	0.000
Plastic (Waste Materials)	0.000	1.000
Inorganic matrix	100.000	400.430
Organic matrix	0.000	0.000
Soils/gravel	0.000	0.000
Steel (packaging materials)	0.000	139.000
Plastic (packaging materials)	0.000	2.000
Cellulosics Packaging	0.000	0.000

Analysis Esignature History

Esig Approval Id	User Id	Esignature Date	Comment
2638527	MRICKS	13-OCT-2013 12:15	

Batch Id RTR13-00242 **Container Id** 10320693 **Analysis Id** 0000092450

Container Type 425 drum, 55 Gallon (UN1A2/X425/S), DOT/WIPP approved **Analysis Status** Pass

RTR Date 13-OCT-2013 12:52 **Gross Weight** 339.570 Lbs **Net Weight** 280.570 Lbs

Equipment Z-213-101 **Waste Matrix Code** S5490 **IDC** RF-750 Pits 11 & 12 Debris

Recording Id 1RTR13-00133 **Procedure Id** INST-OI-12 **Revision** 52 **Approval Level** SPM

Is Test Pattern Resolution Ok? Yes **Start Side** A **Replicate** Yes **OIO** No

Audio Visual Ok? Yes **Operator** JCUMMINGS

Result Comment Contents of this drum is primarily cinder block.

Package

IDC Correct Yes **Recommended IDC** **Summary Category** S5000

Idc Change Reason

Rigid Liner Present? No **LinerType** NO LINER

Liner Punctured? N/A **Sharp Objects?** No

Liner Lid Present? No **Sharp Objects Are Protected?** Yes

Liner Lid Deformed? N/A **Layers Of Confinement** 1

Fill Factor 65

Bag Closure Method No Bags

Liquids

Liquid Present? No **Internal Container with Liquid** No

Internal Container with Liquid 0 pints **LA Candidate** No

Liquid Between Liner & Drum 0 pints **Containerized Liquid**

Total Liquid Amount 0 pints **Containerized Liquid Amt** 0 pints

Other Liquids 0 pints **Comment**

Prohibited Liquids Present No **Comment**

Contents-Drum or Box

	Value	Comment		Value	Comment
Lead?	No		**Mercury Present?**	No	
Wet Cell Batteries?	No		**Explosives?**	No	
Prohibited Compressed Gases?	No		**PCBs Present?**	No	
Aerosol Cans?	No		**PCB Mass (lbs)**	0	
Non-Mixed Hazardous Waste Present?	No		**Sealed Containers Over 4L?**	Yes	30 gallon drum

Non-Radionuclide Pyrophoric Materials Present? No

Waste exhibiting the characteristics of Ignitability, Corrosivity or Reactivity Present? No

Wastes Incompatible with backfill, seal and panel closure materials, container and packaging materials,shipping container or other wastes? No

Impenetrable Dense Objects? No

Waste Material Items

Packaging Materials

Material Item	Quantity	Unit	Unit Wt(lbs)	Item Wt(lbs)

Waste Items byWeight

Material Item	Quantity	Unit	Unit Wt(lbs)	Item Wt(lbs)
30 gallon drum	1.000	EACH	30.000	30.000

Waste Items by Volume

Material Item	Quantity	Unit	Unit Wt(lbs)	Item Wt(lbs)

Batch Id RTR13-00242 **Container Id** 10320693 **Analysis Id** 0000092450

Waste Parameters

Waste Parameter	Remaining Weight %	Actual Weight Lbs
Iron-based Metals/Alloys	0.000	30.000
Aluminum-based Metals/Alloys	0.000	0.000
Other metals	0.000	0.000
Other Inorganic Materials	100.000	250.570
Cellulosics	0.000	0.000
Rubber	0.000	0.000
Plastic (Waste Materials)	0.000	0.000
Inorganic matrix	0.000	0.000
Organic matrix	0.000	0.000
Soils/gravel	0.000	0.000
Steel (packaging materials)	0.000	59.000
Plastic (packaging materials)	0.000	0.000
Cellulosics Packaging	0.000	0.000

Analysis Esignature History

Esig Approval Id	User Id	Esignature Date	Comment
2638529	JCUMMINGS	13-OCT-2013 12:52	

------End of RTR Analysis Report------

AMWTP
Advanced Mixed Waste Treatment Project

AMWTP
Checklist Report

Date: 12-Sep-2014
Time: 13:09

Batch Id RTR13-00242 **Open Date** 12-OCT-13 **Close Date** 13-OCT-13

Reviewer KRISANN HUGHES **Approval Level** Independent Technical Reviewer
Approval Date 27-OCT-13 **Review Iteration** 1

Question Text	Answer	Requirement	Comment
1. Is the Batch Data Report (BDR) and Quality Assurance (QA) documentation complete with the following: o Real-Time Radiography (RTR) Batch Coversheet o Table of Contents (manual review only) o RTR Analysis reports o Replicate Scan o Replicate Comparison o Independent Observation o ITR checklist (Form-1412, manual review only) o Form-1491, Batch Data Report Supplemental Comment Form (manual review only) o Associated NCRs (referenced in Waste Tracking System [WTS]) o Audio/Video Recording References?	Yes		
2. Are there 20 containers or less in the batch?	Yes		
3. Was the image quality indicator (IQI) satisfactory?	Yes		
4. Does every container in the batch reference an audio/video recording?	Yes		
5. Is there a completed radiography data analysis for each container in the batch?	Yes		
6. Was each RTR Operator qualified at the time of the radiography event?	Yes		
7. Was the data generated in a technically correct manner using the correct revision of INST-OI-12, Real-Time Radiography Operations (Drum)?	Yes		
8. Was the correct procedure and revision documented on all analysis reports?	Yes		
9. Has the E-signature History review been performed?	Yes		
10. Does the RTR operator confirm that the physical form matched the waste stream description and waste matrix code?	Yes		
11. Does the packaging weight plus the net weight equal the gross weight of the container in the estimated waste material parameters?	Yes		
12. Were all entries into the waste material items section assigned to the correct waste material parameters?	Yes		
13. Has the description of rigid liners and layers of confinement been properly documented, as applicable?	Yes		
14. Was the presence or absence of prohibited items properly documented?	Yes		
15. If prohibited items were identified, have appropriate nonconformance reports (NCRs) been generated?	Yes		
16. Were the containers examined between October and April in compliance with the preheat requirements?	Yes		
17. Were all proper units and significant figures used for all reported volumes/weights?	Yes		
18. Was there a valid replicate scan performed (at least one container per day, or once per testing batch,	Yes		Container 10320693, observation date 13OCT13. No significant differences between original and

Batch Id RTR13-00242 **Open Date** 12-OCT-13 **Close Date** 13-OCT-13

Reviewer KRISANN HUGHES **Approval Level** Independent Technical Reviewer

Approval Date 27-OCT-13 **Review Iteration** 1

Question Text	Answer	Requirement	Comment
whichever is less frequent)? o Record the container number, the replicate observation date in the comment section of this checklist. o Record any issues or concerns in the batch comment section.			replicate exams.
19. Was there a valid Operator Independent Observation (OIO) (not the replicate) performed (at least one container per day, or once per testing batch, whichever is less frequent)? o Record the container number and the OIO date in the comment section of this checklist. o Record any issues or concerns in the batch comment section.	Yes		Container 10408625, observation date 12OCT13. No significant differences between original and OIO. The OIO operator inadvertently entered Twisted and Taped into Bag Closure Method field. Rework will not be performed.
20. Were any significant differences identified that would affect the original disposition of the replicate and OIO, or affect data quality objectives (DQOs)? If so, ensure an NCR was generated and WTS flagged.	No		
21. Were the RTR quality assurance objectives (QAOs) met? o Precision o Accuracy o Completeness o Comparability	Yes		
22. Were any NCRs generated for containers containing prohibited items, or any non-conforming conditions that failed to meet DQOs or QAOs? o If so, include the NCRs, as appropriate, in the BDR.	Yes		
23. Were the rework requirements clearly identified in WTS or on the BDR?	N/A		

Batch Id RTR13-00242 **Open Date** 12-OCT-13 **Close Date** 13-OCT-13

Reviewer DAVE MARQUARDT **Approval Level** SPM Data Validation

Approval Date 08-NOV-13 **Review Iteration** 1

Question Text	Answer	Requirement	Comment
(1) Has the batch received a Data Generation Level Independent Technical Review?	Yes	MP-TRUW-8.2, C3-10b(1)	
(2) Is the Independent Technical Review checklist complete?	Yes	MP-TRUW-8.2, C3-10b(1)	
(3) When identified, were polychlorinated biphenyls (PCBs), mercury, lead, or other hazardous contaminants consistent with the waste stream acceptable knowledge (AK) Summary Report(s) and/or AK documentation?	Yes	MP-TRUW-8.2, C4-3	
(4) Are any ignitable, corrosive, or reactive wastes identified in this waste?	No	MP-TRUW-8.2, C4-3	
(5) Are the packaging configurations identified on the real-time radiography (RTR) consistent with the waste stream AK Summary Report(s) and/or AK documentation?	Yes	MP-TRUW-8.2, C4-3	
(6) Do the containers in this batch contain typical waste items consistent with waste stream AK Summary Report(s) and/or AK documentation?	Yes	MP-TRUW-8.2, C4-3	
(7) Are the Waste Matrix Codes (WMCs) and physical form descriptions consistent with AK?	Yes	MP-TRUW-8.2, C4-3	
(8) Have all AK discrepancies been resolved and have all AK Resolution checklists been approved? Reference all waste stream AK documentation used in review of this data package.	N/A	MP-TRUW-8.2, C4-3	No discrepancies. RPT-TRUW-05, RPT-TRUW-06, RPT-TRUW-12, RPT-TRUW-56.
(9) Have all applicable Quality Assurance Objectives (QAOs) been met, including precision, accuracy, completeness, and comparability, by using the appropriate acceptance criteria for each as specified in MP-TRUW-8.2, Quality Assurance Project Plan Section C3-4? Precision ¿ Verified prior to use by tuning precisely enough to demonstrate compliance with QAOs through viewing an image test pattern, as evidenced by a satisfactory Image Quality Indicator (IQI). ¿ Have discrepancies, if any, between radiography operators been reconciled? Accuracy ¿ Use of a target to tune the image for maximum sharpness as evidenced by a satisfactory IQI and by requiring operators to successfully identify 100% of the required items in a training container during initial and subsequent qualifications. Completeness ¿ An audio/videotape (or equivalent media) of the radiography examination and a validated radiography data form will be obtained for 100% of the retrievably stored waste container in the program for all waste containers subject to radiography. Comparability ¿ Use of standardized radiography procedures and operator qualifications.	Yes	MP-TRUW-8.2, C3-4a	
(10) Do the waste container contents match the WMC, waste stream description and identify the absence of prohibited items?	Yes	MP-TRUW-8.2, C1-3 and B3-11	

Batch Id RTR13-00242 **Open Date** 12-OCT-13 **Close Date** 13-OCT-13

Reviewer DAVE MARQUARDT **Approval Level** SPM Data Validation
Approval Date 08-NOV-13 **Review Iteration** 1

Question Text	Answer	Requirement	Comment
(11) If residual liquids exist in the container, is an estimate of quantity given?	Yes	MP-TRUW-8.2, C1-3	
(12) Do the individual container reports contain the (a) IDC, (b) Waste Matrix Code, (c) audio/video recording reference, (d) gross container weight, (e) waste material parameter weights, and (f) signature and date of examination?	Yes	MP-TRUW-8.2, C1-3 and C3-11a	
(13) Have the IDC, WMC, and/or waste stream for all containers in the batch remained the same as originally assigned by the historical designation? If not, note the container number in the comment field and notify the Acceptable Knowledge Expert (AKE) if NCR does not exist on the WMC and IDC change.	Yes	MP-TRUW-8.2, C1-3 and C3-4a	
(14) Was a replicate scan performed by an independent operator on at least one container per day or once per testing batch, whichever is less frequent, by a qualified radiography operator that was not involved in the original scan of the waste container?	Yes	MP-TRUW-8.2, B1-3, C3-4a, and C3-10b(1)	
(15) Has an independent observation of one scan (not the replicate) been performed by a qualified operator that was not involved in the original scan of the waste container, at a rate of once per day or once per batch, whichever is less frequent? Record date of observation and any issues or concerns in the comment section.	Yes	MP-TRUW-8.2, C1-3 and C3-4a	Container 10408625, observation date 12OCT13. No issues.
(16) Did personnel having current qualifications perform all RTR examinations?	Yes	MP-TRUW-8.1, Appendix F	
(17) Verify the correct procedure and revision number were used for all containers in this batch.	Yes	MP-TRUW-8.2, C3-4a	
(18) Verify the audio and video checks were performed and are satisfactory.	Yes	MP-TRUW-8.2, C3-4a	
(19) Verify that there are 20 or fewer containers in the batch.	Yes	MP-TRUW-8.2, C1-3	
(20) Does the data for all containers within this batch meet the review, validation, and verification requirements? · Are proper units (e.g. Liters or pounds) and significant figure used? · Is the BDR complete (all pages identified in the BDR and numbered accordingly)? - RTR Batch Coversheet - Table of Contents (manual review only) - RTR Analysis reports - Replicate Scan - Replicate Comparison - Independent Observation - Form-1412, ITR checklist - Associated NCRs - Form, 1491, Batch Data Report Supplemental Comment Form, as applicable - Audio/Video Recording References	Yes	MP-TRUW-8.2, C3 10b(2)	
(21) Review all NCR(s) (open and closed). Can the batch be approved?	Yes	MP-TRUW-8.2, C3-13	
(22) Is all data associated with this BDR acceptable for signature release?	Yes	MP-TRUW-8.2, C3 10b(2)	

Batch Id RTR13-00242 **Open Date** 12-OCT-13 **Close Date** 13-OCT-13

Esignature History

Esig Approval ID	User ID	Esig Date	Approval Level	Comments
2651220	DMARQUARDT	08-NOV-13	SPM	Reviewed and validated. Approve.
2645140	KHUGHES	27-OCT-13	ITR	promote to SPM

AMWTP
Advanced Mixed Waste Treatment Project

AMWTP

Non-Conformance Report

Date: 12-Sep-2014
Time: 13:10

*****Batch NCR(s)*****

Batch Type	RTR	Batch ID	RTR13-00242		
Trackwise Number		**Status**		**Opened Date**	**Closed Date**

*****Container NCR(s)*****

Container ID *or related Batch ID*	Trackwise Number	Status	Opened Date	Closed Date
10140632	56972	CLOSED	11-NOV-10	19-NOV-13
10140632	81224	OPEN	12-OCT-13	
10140632	81225	OPEN	12-OCT-13	
10145408	81227	CLOSED	12-OCT-13	22-AUG-14
10145408	81229	CLOSED	12-OCT-13	22-AUG-14
10320693	81238	CLOSED	13-OCT-13	20-MAR-14
10330376	81231	CLOSED	12-OCT-13	26-MAR-14
10407548	81240	CLOSED	13-OCT-13	08-MAY-14
10415417	81242	CLOSED	13-OCT-13	13-MAY-14
10415942	81234	CLOSED	12-OCT-13	08-MAY-14
10407548	64061	CLOSED	07-JUL-11	28-OCT-13
10408608	64060	CLOSED	07-JUL-11	28-OCT-13

*****End of Non-Conformance Report*****

AMWTP

Advanced Mixed Waste Treatment Project

AMWTP

RTR Replicate Comparison Report

Date: 12-Sep-2014

Time: 13:10

RTR Batch Id: RTR13-00242 **Container Id:** 10320693 **Equipment Id:** Z-213-101

Container type Description: **drum, 55 Gallon (UN1A2/X425/S), DOT/WIPP appr** Gen-IDC: **RF-750** Gross Weight(Lbs): **339.57**

	Original Analysis		Replicate Analysis	
Analysis Id / Date:	0000092442	13-OCT-2013 10:14	0000092450	13-OCT-2013 12:52
Procedure /Revision:	INST-OI-12	52	INST-OI-12	52
Recording Media Id:	1RTR13-00133		1RTR13-00133	
Starting Position:	A		A	
Is Test Pattern Resolution Ok?	Y		Y	
Audio Visual Ok?	Y		Y	
Personnel Name:	MICHAEL RICKS		JOHN CUMMINGS	
IDC Ok? / Recommended IDC:	Y		Y	
IDC Change Reason:				
Summary Category / Waste matrix Code:	S5000	S5490	S5000	S5490
Packaging				
Rigid Liner Present?	N		N	
Liner Type Code:	NO LINER		NO LINER	
Liner Punctured:	NA		NA	
Liner Lid Deformed:	NA		NA	
Layers Of Confinement:	1		1	
Sharp Objects?	N		N	
Sharp Objects Protected?	Y		Y	
Fill Factor(%):	60		65	
Bag Closure Method:	No Bags		No Bags	
Liner Lid Present?:	N		N	
Liquids: (Volume in Pints)				
Liquid Present?	N		N	
Internal Container with Liquid?	0		0	
Containerized Liquid	N		N	
Other Liquids:	0		0	
Internal Container with Liquid Amt:	0		0	
Liquid Between Liner and Drum:	0		0	
Containerized Liquid:	0		0	
Total Liquid Amount:	0		0	
LA Candidate?	N		N	
Prohibited Liquids Present?	N		N	

Contents:	Y/N	Comments	Y/N	Comments
Sealed Containers over 4L?	Y	30 gal drum	Y	30 gallon drum
Lead Present?	N		N	
Explosives Present?	N		N	
Mercury Present?	N		N	
Wet Cell Batteries Detected?	N		N	

AMWTP
Advanced Mixed Waste Treatment Project

AMWTP

RTR Replicate Comparison Report

Date: 12-Sep-2014

Time: 13:10

RTR Batch Id: RTR13-00242 **Container Id:** 10320693 **Equipment Id:** Z-213-101

	Original Analysis	Replicate Analysis
Prohibited Compressed Gas Present	N	N
PCBs Present?	N	N
PCB Mass (lbs)	0	0
Non-Radionuclide Pyrophoric Materials Present?	N	N
Waste exhibiting the characteristics of ignitability, Corrosivity or reactivity Present?	N	N
Non-Mixed Hazardous Waste Present	N	N
Waste Incompatibles with backfill, Seal and panel closure materials, container and packaging material, shipping container or other wastes?	N	N
Impenetrable Dense Objects?	N	N
Result Comment:	30 gal drum inside 55 gal drum appears to contain broken pieces of cinder block.	Contents of this drum is primarily cinder block.

----------E-signature----------

Esig Approval ID	User ID	Signature Date	Comment
2642329	KHUGHES	22-OCT-13	valid

-----End of RTR Replicate Comparison Report-----

AMWTP
Advanced Mixed Waste Treatment Project

AMWTP

RTR OIO Comparison Report

Date: 12-Sep-2014

Time: 13:10

RTR Batch Id: RTR13-00242 **Container Id:** 10408625 **Equipment Id:** Z-213-101

Container type Description: **drum, 55 Gallon Drum (17H)** Gen-IDC: **RF-003** Gross Weight(Lbs): **456.435**

	Original Analysis		OIO Analysis	
Analysis Id / Date:	0000092438	12-OCT-2013 17:15	0000092441	12-OCT-2013 17:51
Procedure /Revision:	INST-OI-12	52	INST-OI-12	52
Recording Media Id:	1RTR13-00133		1RTR13-00133	
Starting Position:	A		A	
Is Test Pattern Resolution Ok?	Y		Y	
Audio Visual Ok?	Y		Y	
Personnel Name:	DANNY GREEN		SAMUEL PHILLIPS	
IDC Ok? / Recommended IDC:	Y		Y	
IDC Change Reason:				
Summary Category / Waste matrix Code:	S3000	S3114	S3000	S3114
Packaging				
Rigid Liner Present?	Y		Y	
Liner Type Code:	TYPE 1		TYPE 1	
Liner Punctured:	Y		Y	
Liner Lid Deformed:	NA		NA	
Layers Of Confinement:	0		0	
Sharp Objects?	N		N	
Sharp Objects Protected?	Y		Y	
Fill Factor(%):	87		95	
Bag Closure Method:	No Bags		Twisted and Taped	
Liner Lid Present?:	N		N	
Liquids: (Volume in Pints)				
Liquid Present?	N		N	
Internal Container with Liquid?	0		0	
Containerized Liquid	N		N	
Other Liquids:	0		0	
Internal Container with Liquid Amt:	0		0	
Liquid Between Liner and Drum:	0		0	
Containerized Liquid:	0		0	
Total Liquid Amount:	0		0	
LA Candidate?	N		N	
Prohibited Liquids Present?	N		N	

Contents:	Y/N	Comments	Y/N	Comments
Sealed Containers over 4L?	N		N	
Lead Present?	Yes, Acceptable	TID	Yes, Acceptable	lead
Explosives Present?	N		N	
Mercury Present?	N		N	
Wet Cell Batteries Detected?	N		N	

AMWTP
Advanced Mixed Waste Treatment Project

AMWTP
RTR OIO Comparison Report

Date: 12-Sep-2014
Time: 13:10

RTR Batch Id: RTR13-00242 **Container Id:** 10408625 **Equipment Id:** Z-213-101

	Original Analysis		OIO Analysis	
Prohibited Compressed Gas Present	N		N	
PCBs Present?	Y	no liquid	Y	PCB Waste
PCB Mass (lbs)	381.44		381.44	
Non-Radionuclide Pyrophoric Materials Present?	N		N	
Waste exhibiting the characteristics of ignitability, Corrosivity or reactivity Present?	N		N	
Non-Mixed Hazardous Waste Present	N		N	
Waste Incompatibles with backfill, Seal and panel closure materials, container and packaging material, shipping container or other wastes?	N		N	
Impenetrable Dense Objects?	N		N	
Result Comment:	Waste consists of sludge.		This drum contains Sludge!	

----------E-signature----------

Esig Approval ID	User ID	Signature Date	Comment

-----End of RTR OIO Comparison Report-----

AMWTP
Advanced Mixed Waste Treatment Project

NON-CONFORMANCE REPORT

WIPP DATA - RTR

NCR #: 56972

Title: RTR Characterization

Originator: Ragan, Julie	**Date Opened:** 11/11/10
Responsible Dept: Plant Manager	**Batch #:** N/A
Container ID: 10140632	**Tag Applied:** Yes

Characterization Problem:

Originator Sign By: Julie Ragan	**Originator Sign Date:** 11/11/10

Production Comments: **Approved Remediation:** **Re-Characterization**

8 pints liquid throughout the waste >1%.
This container was re-rtr'd in RTR13-00242. DJM. 11/19/13.

Performed By: David Marquardt	**Performed Date:** 11/19/13

Waste Programs Evaluation/Verification:

SPM Verification Statement: This container has valid results and has been approved at the SPM level in RTR13-00242. NCR 81224 was generated for prohibited liquids. This NCR can be closed. NCR 81224 will be used to track the prohibited condition of this drum DJM. 11/19/13.

SPM Verification Complete By: David Marquardt	**SPM Verification Complete Date:** 11/19/13
MLLW/LLW Verification Complete By:	**MLLW/LLW Verification Complete Date:**

QA Closure Comments:

QA Closure Comment: Verified in WTS that container 10140632 has been characterized as part of RTR13-00242 with valid results. The RTR exam determined the presence of prohibited liquids. Verified in TrackWise that NCR 81224 has been generated for the nonconformance. No further action is required of this NCR. C. Robison 11-19-13

QA Add'l Action Reqd By:	**QA Add'l Action Reqd Date:**
QA Verification Complete By: Camille Robison	**QA Verification Comp Date:** 11/19/13

AMWTP
Advanced Mixed Waste Treatment Project

NON-CONFORMANCE REPORT

WIPP DATA - RTR

NCR #: 81224

Title: RTR Characterization	
Originator: Green, Danny	**Date Opened:** 10/12/13
Responsible Dept: Plant Manager	**Batch #:** RTR13-00242
Container ID: 10140632	**Tag Applied:** Yes
Characterization Problem:	
Originator Sign By: Danny Green	**Originator Sign Date:** 10/12/13

Production Comments: **Approved Remediation:**

Multiple pockets of liquid in the bagging throughout the waste, & across the entire 4" of the bottom of the drum 34 pts. total.

Performed By:	**Performed Date:**

Waste Programs Evaluation/Verification:

SPM Verification Complete By:	**SPM Verification Complete Date:**
MLLW/LLW Verification Complete By:	**MLLW/LLW Verification Complete Date:**

QA Closure Comments:

QA Add'l Action Reqd By:	**QA Add'l Action Reqd Date:**
QA Verification Complete By:	**QA Verification Comp Date:**

AMWTP
Advanced Mixed Waste Treatment Project

NON-CONFORMANCE REPORT

WIPP DATA - RTR

NCR #: 81225

Title: RTR Characterization	
Originator: Green, Danny	**Date Opened:** 10/12/13
Responsible Dept: Plant Manager	**Batch #:** RTR13-00242
Container ID: 10140632	**Tag Applied:** Yes
Characterization Problem:	
Originator Sign By: Danny Green	**Originator Sign Date:** 10/12/13

Production Comments: **Approved Remediation:**

The bottom 4" of the drum are impenetrable due to liquid.

Performed By:	**Performed Date:**

Waste Programs Evaluation/Verification:

SPM Verification Complete By:	**SPM Verification Complete Date:**
MLLW/LLW Verification Complete By:	**MLLW/LLW Verification Complete Date:**

QA Closure Comments:

QA Add'l Action Reqd By:	**QA Add'l Action Reqd Date:**
QA Verification Complete By:	**QA Verification Comp Date:**

AMWTP
Advanced Mixed Waste Treatment Project

NON-CONFORMANCE REPORT

WIPP DATA - RTR

NCR #: 81240

Title: RTR Characterization

Originator: Ricks, Michael	**Date Opened:** 10/13/13
Responsible Dept: Plant Manager	**Batch #:** RTR13-00242
Container ID: 10407548	**Tag Applied:** Yes

Characterization Problem:

Originator Sign By: Michael Ricks	**Originator Sign Date:** 10/13/13

Production Comments: **Approved Remediation:** **ARP Remediation**

Small amount of liquid on top of 003 sludge

Performed By: Kathy Birch	**Performed Date:** 05/07/14

Waste Programs Evaluation/Verification:

Container is slated to be transferred to WMF-1617 Sludge Repackage Project (SRP) for Treatment/Remediation; Approved Remediation has been changed to "ARP Remediation". JBagley 10/28/2013
This drum is comprised of CCP sludge waste and is slated for Sludge Repack Processing (SRP) at CWI. The container has been identified in IWTS for SRP, as evidence in the attached file. KLB 5/7/14

SPM Verification Complete By: Kathy Birch	**SPM Verification Complete Date:** 05/07/14
MLLW/LLW Verification Complete By:	**MLLW/LLW Verification Complete Date:**

QA Closure Comments:

QA Closure Comment: Container 10407548 is overpacked by container 10520408, which is identified on IWTS Ship Task SRP14-033 report. Container data has been reviewed and verified accurate in WTS for transfer to CWI for Sludge Repack Processing. No further action required. This NCR is closed. C. Robison 05-08-14

QA Add'l Action Reqd By:	**QA Add'l Action Reqd Date:**
QA Verification Complete By: Camille Robison	**QA Verification Comp Date:** 05/08/14

DIVIDER PAGE

AMWTP
Advanced Mixed Waste Treatment Project

AMWTP

Batch Report Coversheet

Date: 12-Sep-2014

Time: 13:14

Batch Type Real Time Radiography
Batch Report No. RTR13-00305
Batch Id RTR13-00305
Open Date 27-NOV-13 12:23:56
Close Date 30-NOV-13 12:36:42
Batch Status AP
Test Facility Idaho AMWTP
Equipment Id Z-213-101 RTR Station Left (213-101)

Container Id	IDC	Analysis Id	Date Examined	QC Type	Analysis Status	Operator
10027367	AW-160	0000093845	27-NOV-13 12:23:56	Original	P	DANNY GREEN
10027353	AW-160	0000093846	27-NOV-13 12:45:28	Original	P	MARK SORENSON
10019796	RF-480	0000093849	27-NOV-13 13:39:01	Original	P	MARK SORENSON
10350236	RF-337	0000093851	27-NOV-13 14:50:40	Original	P	SAMUEL PHILLIPS
10368780	RF-480	0000093853	27-NOV-13 15:42:51	Original	P	MARK SORENSON
10217957	RF-005	0000093856	27-NOV-13 16:03:56	Original	P	SAMUEL PHILLIPS
10368007	RF-900	0000093858	27-NOV-13 16:22:20	Original	P	SAMUEL PHILLIPS
10351592	RF-760	0000093861	27-NOV-13 17:44:03	Original	P	MARK SORENSON
10276372	BL-020	0000093876	30-NOV-13 10:33:09	Original	P	DIANNA MOORE
10276379	BL-020	0000093877	30-NOV-13 10:54:19	Original	P	DIANNA MOORE
10276372	BL-020	0000093879	30-NOV-13 11:25:57	RTR OIO	P	JOHN CUMMINGS
10276379	BL-020	0000093881	30-NOV-13 11:48:02	Replicate / Duplicate	P	JOHN CUMMINGS

INFORMATION ONLY

**********Batch Comments**********

Written By	Date	Comment
JCUMMINGS	30-NOV-13 12:36:46	Closed this batch to start new one.
CHINKLE	03-DEC-13 07:26:29	03-DEC-13 CHINKLE AKE This batch is returned for rework. AK does not concur with the recommended IDC change for container 10351592. CHD 12/03/13
MSORENSON	03-DEC-13 15:11:28	AK rework completed.
CHINKLE	04-DEC-13 05:55:57	03-DEC-13 CHINKLE AKE This batch is returned for rework. AK does not concur with the recommended IDC change for container 10351592. CHD 12/03/13 04-DEC-13 CHINKLE AKE Batch is promoted. chd 12/04/13
KHUGHES	09-DEC-13 13:10:27	Validated electronically.
KHUGHES	09-DEC-13 17:50:47	(info only) Container 10350236, the Plastic bag for waste identified in Waste Items by Weight, is not an additional Layer of Confinement. Data is correct per A/V.
KHUGHES	09-DEC-13 17:50:47	(rework) Container 10368780, please enter the following comment into Result Comment field "Disregard the previous description of the waste. The Remaining Contents of Container is piping, metal sheeting angle iron, metal brackets and metal plates with screws."
KHUGHES	09-DEC-13 17:50:47	(rework) Container 10027353, please enter "Yes, Acceptable" into Lead field.
KHUGHES	09-DEC-13 17:50:47	(rework) Container 10019796, please enter Yes into Sealed Containers Over 4L with comment "large can lead lined". Remove Plastic bag for waste from Waste Items by Weight.
KHUGHES	09-DEC-13 17:53:54	return for rework
MSORENSON	11-DEC-13 07:48:49	Rework complete.
KHUGHES	10-JAN-14 13:56:31	rework complete and sat
KHUGHES	10-JAN-14 13:56:47	promote to SPM
DMARQUARDT	13-JAN-14 15:16:29	Reviewed and validated. Approve.
DMARQUARDT	13-JAN-14 15:16:29	Promote.
DMARQUARDT	13-JAN-14 15:16:29	Note: In discussion with AK, Drum 10027367 is assigned the correct IDC of AW-160.

AMWTP
Advanced Mixed Waste Treatment Project

AMWTP

Batch Report Coversheet

Date: 12-Sep-2014

Time: 13:14

**********Batch E-Signature History**********

Approval ID	User ID	Signature Date	Comment
2661392	JCUMMINGS	30-NOV-2013 12:36:46	Closed this batch to start new one.
2664473	MSORENSON	03-DEC-2013 15:11:29	AK rework completed.
2667174	KHUGHES	09-DEC-2013 17:53:54	return for rework
2667586	MSORENSON	11-DEC-2013 07:48:50	Rework complete.
2673674	KHUGHES	10-JAN-2014 13:56:47	promote to SPM
2674446	DMARQUARDT	13-JAN-2014 15:16:29	Reviewed and validated. Approve.

***** End of Batch Report Coversheet Report *****

AMWTP
Advanced Mixed Waste Treatment Project

AMWTP

RTR Analysis Report

Date: 12-Sep-2014
Time: 13:14

Batch Id RTR13-00305 **Container Id** 10027367 **Analysis Id** 0000093845

Container Type 001 drum, 55 Gallon (17C) **Analysis Status** Pass

RTR Date 27-NOV-2013 12:23 **Gross Weight** 125.685 Lbs **Net Weight** 49.685 Lbs
Equipment Z-213-101 **Waste Matrix Code** S5490 **IDC** AW-160 AL/CL Debris Waste
Recording Id 1RTR13-00165 **Procedure Id** INST-OI-12 **Revision** 52 **Approval Level** SPM
Is Test Pattern Resolution Ok? Yes **Start Side** A **Replicate** No **OIO** No
Audio Visual Ok? Yes **Operator** DGREEN

Result Comment Waste consists of plastis - sheeting, containers, labware, & glove rings.
AK concurs with the recommended IDC, 10027367, for container 10027367. No AKR or NCR is necessary. CHD 12/03/13

Package

IDC Correct Yes **Recommended IDC** **Summary Category** S5000
Idc Change Reason
Rigid Liner Present? Yes **LinerType** TYPE 4
Liner Punctured? Yes **Sharp Objects?** No
Liner Lid Present? Yes **Sharp Objects Are Protected?** Yes
Liner Lid Deformed? No **Layers Of Confinement** 2
Fill Factor 93
Bag Closure Method Twisted and Taped

Liquids

Liquid Present? Yes **Internal Container with Liquid** Yes
Internal Container with Liquid .05 pints **LA Candidate** No
Liquid Between Liner & Drum 0 pints **Containerized Liquid**
Containerized Liquid Amt 0 pints
Total Liquid Amount .05 pints
Other Liquids 0 pints **Comment** .05 in a plastic bottle
Prohibited Liquids Present No **Comment**

Contents-Drum or Box

	Value	Comment		Value	Comment
Lead?	Yes, Acceptable	tape	**Mercury Present?**	No	
Wet Cell Batteries?	No		**Explosives?**	No	
Prohibited Compressed Gases?	No		**PCBs Present?**	No	
Aerosol Cans?	No		**PCB Mass (lbs)**	0	
Non-Mixed Hazardous Waste Present?	No		**Sealed Containers Over 4L?**	No	

Non-Radionuclide Pyrophoric Materials Present? No
Waste exhibiting the characteristics of Ignitability, Corrosivity or Reactivity Present? No
Wastes Incompatible with backfill, seal and panel closure materials, container and packaging materials,shipping container or other wastes? No
Impenetrable Dense Objects? No

Waste Material Items

Packaging Materials

Material Item	Quantity	Unit	Unit Wt(lbs)	Item Wt(lbs)
90 mil liner	1.000	EACH	16.000	16.000
Drum plastic bag	1.000	EACH	1.000	1.000

Waste Items byWeight

Material Item	Quantity	Unit	Unit Wt(lbs)	Item Wt(lbs)
o-rings	1.000	EACH	8.000	8.000
paper & rags	1.000	EACH	5.000	5.000
solids	1.000	EACH	4.000	4.000
lead tape	1.000	EACH	0.250	0.250
metal waste	1.000	EACH	6.000	6.000
Plastic bag for waste	1.000	EACH	0.250	0.250

Batch Id RTR13-00305 **Container Id** 10027367 **Analysis Id** 0000093845

Waste Items by Volume

Material Item	Quantity	Unit	Unit Wt(lbs)	Item Wt(lbs)
Liquids for Other Inorganics	0.050	PINTS	1.000	0.050

Waste Parameters

Waste Parameter	Remaining Weight %	Actual Weight Lbs
Iron-based Metals/Alloys	0.000	6.000
Aluminum-based Metals/Alloys	0.000	0.000
Other metals	0.000	0.250
Other Inorganic Materials	0.000	4.050
Cellulosics	0.000	5.000
Rubber	0.000	8.000
Plastic (Waste Materials)	100.000	26.385
Inorganic matrix	0.000	0.000
Organic matrix	0.000	0.000
Soils/gravel	0.000	0.000
Steel (packaging materials)	0.000	59.000
Plastic (packaging materials)	0.000	17.000
Cellulosics Packaging	0.000	0.000

Analysis Esignature History

Esig Approval Id	User Id	Esignature Date	Comment
2663957	CHINKLE	03-DEC-2013 07:26	This batch is returned for rework. AK does not concur with the recommended IDC change for container 10351592. CHD 12/03/13
2660773	DGREEN	27-NOV-2013 12:23	

Batch Id RTR13-00305 **Container Id** 10027353 **Analysis Id** 0000093846

Container Type 001 drum, 55 Gallon (17C) **Analysis Status** Pass

RTR Date 27-NOV-2013 12:45 **Gross Weight** 178.605 Lbs **Net Weight** 103.605 Lbs

Equipment Z-213-101 **Waste Matrix Code** S5490 **IDC** AW-160 AL/CL Debris Waste

Recording Id 1RTR13-00165 **Procedure Id** INST-OI-12 **Revision** 52 **Approval Level** SPM

Is Test Pattern Resolution Ok? Yes **Start Side** A **Replicate** No **OIO** No

Audio Visual Ok? Yes **Operator** DGREEN

Result Comment Waste consists of plastic sheeting & containers.
Rework: Answered lead yes acceptable. MS 12/11/13

Package

IDC Correct Yes **Recommended IDC** **Summary Category** S5000

Idc Change Reason

Rigid Liner Present? Yes **LinerType** TYPE 4

Liner Punctured? Yes **Sharp Objects?** Yes

Liner Lid Present? Yes **Sharp Objects Are Protected?** Yes

Liner Lid Deformed? No **Layers Of Confinement** 2

Fill Factor 80

Bag Closure Method Twisted and Taped

Liquids

Liquid Present? Yes **Internal Container with Liquid** Yes

Internal Container with Liquid .03 pints **LA Candidate** No

Liquid Between Liner & Drum 0 pints **Containerized Liquid**

Containerized Liquid Amt 0 pints

Total Liquid Amount .03 pints

Other Liquids 0 pints **Comment** .03 pt. in a plastic bottle

Prohibited Liquids Present No **Comment**

Contents-Drum or Box

	Value	Comment		Value	Comment
Lead?	Yes, Acceptable	leaded can- shielding	**Mercury Present?**	No	
Wet Cell Batteries?	No		**Explosives?**	No	
Prohibited Compressed Gases?	No		**PCBs Present?**	No	
Aerosol Cans?	No		**PCB Mass (lbs)**	0	
Non-Mixed Hazardous Waste Present?	No		**Sealed Containers Over 4L?**	Yes	large can

Non-Radionuclide Pyrophoric Materials Present? No

Waste exhibiting the characteristics of Ignitability, Corrosivity or Reactivity Present? No

Wastes Incompatible with backfill, seal and panel closure materials, container and packaging materials,shipping container or other wastes? No

Impenetrable Dense Objects? No

Waste Material Items

Packaging Materials

Material Item	Quantity	Unit	Unit Wt(lbs)	Item Wt(lbs)
90 mil liner	1.000	EACH	16.000	16.000

Waste Items byWeight

Material Item	Quantity	Unit	Unit Wt(lbs)	Item Wt(lbs)
battery pack	1.000	EACH	0.750	0.750
large can	1.000	EACH	2.000	2.000
metal waste	1.000	EACH	35.000	35.000
leaded can	1.000	EACH	10.000	10.000
paper & rags	1.000	EACH	12.000	12.000
Plastic bag for waste	1.000	EACH	0.250	0.250

Batch Id RTR13-00305 **Container Id** 10027353 **Analysis Id** 0000093846

Waste Items by Volume

Material Item	Quantity	Unit	Unit Wt(lbs)	Item Wt(lbs)
Oil-Dri (Inside 55 gal drum)	4.000	PINTS	0.420	1.680
Liquids for Other Inorganics	0.030	PINTS	1.000	0.030

Waste Parameters

Waste Parameter	Remaining Weight %	Actual Weight Lbs
Iron-based Metals/Alloys	0.000	37.000
Aluminum-based Metals/Alloys	0.000	0.000
Other metals	0.000	10.750
Other Inorganic Materials	0.000	1.710
Cellulosics	0.000	12.000
Rubber	0.000	0.000
Plastic (Waste Materials)	100.000	42.145
Inorganic matrix	0.000	0.000
Organic matrix	0.000	0.000
Soils/gravel	0.000	0.000
Steel (packaging materials)	0.000	59.000
Plastic (packaging materials)	0.000	16.000
Cellulosics Packaging	0.000	0.000

Analysis Esignature History

Esig Approval Id	User Id	Esignature Date	Comment
2667584	MSORENSON	11-DEC-2013 07:44	rework
2660791	DGREEN	27-NOV-2013 12:45	

Batch Id RTR13-00305 **Container Id** 10019796 **Analysis Id** 0000093849

Container Type A drum, 55 Gallon Drum (17H) **Analysis Status** Pass

RTR Date 27-NOV-2013 13:39 **Gross Weight** 339.570 **Lbs** **Net Weight** 262.570 **Lbs**

Equipment Z-213-101 **Waste Matrix Code** S5112 **IDC** RF-480 Non-special Source Metal

Recording Id 1RTR13-00165 **Procedure Id** INST-OI-12 **Revision** 52 **Approval Level** SPM

Is Test Pattern Resolution Ok? Yes **Start Side** A **Replicate** No **OIO** No

Audio Visual Ok? Yes **Operator** SPHILLIPS

Result Comment This drum contains Metal debris in the form of Large cans, scrap metal and lead.
Rework: Answered sealed container over 4L yes for a large lead lined can and removed plastic bag for waste. MS 12/11/13

Package

IDC Correct Yes **Recommended IDC** **Summary Category** S5000

Idc Change Reason

Rigid Liner Present? Yes **LinerType** TYPE 1

Liner Punctured? Yes **Sharp Objects?** No

Liner Lid Present? Yes **Sharp Objects Are Protected?** Yes

Liner Lid Deformed? No **Layers Of Confinement** 3

Fill Factor 85

Bag Closure Method Twisted and Taped

Liquids

Liquid Present? No **Internal Container with Liquid** No

Internal Container with Liquid 0 pints **LA Candidate** No

Liquid Between Liner & Drum 0 pints **Containerized Liquid**

Total Liquid Amount 0 pints **Containerized Liquid Amt** 0 pints

Other Liquids 0 pints **Comment**

Prohibited Liquids Present No **Comment**

Contents-Drum or Box

	Value	Comment		Value	Comment
Lead?	Yes, Rejected	lead liner and leadded rubber gloves	**Mercury Present?**	No	
Wet Cell Batteries?	No		**Explosives?**	No	
Prohibited Compressed Gases?	No		**PCBs Present?**	No	
Aerosol Cans?	No		**PCB Mass (lbs)**	0	
Non-Mixed Hazardous Waste Present?	No		**Sealed Containers Over 4L?**	Yes	Large lead lined can

Non-Radionuclide Pyrophoric Materials Present? No

Waste exhibiting the characteristics of Ignitability, Corrosivity or Reactivity Present? No

Wastes Incompatible with backfill, seal and panel closure materials, container and packaging materials,shipping container or other wastes? No

Impenetrable Dense Objects? Yes - Unacceptable lead liner, lead lined container.

Waste Material Items

Packaging Materials

Material Item	Quantity	Unit	Unit Wt(lbs)	Item Wt(lbs)
90 mil liner	1.000	EACH	16.000	16.000
Drum plastic bag	2.000	EACH	1.000	2.000

Waste Items byWeight

Material Item	Quantity	Unit	Unit Wt(lbs)	Item Wt(lbs)
large can lead lined	1.000	EACH	10.000	10.000
plastic waste	1.000	EACH	5.000	5.000
Leaded rubber glove	1.000	EACH	5.500	5.500
Drum lead-liner (1/16"x28"x72")	1.000	EACH	50.000	50.000

Batch Id RTR13-00305 **Container Id** 10019796 **Analysis Id** 0000093849

Waste Items by Volume

Material Item	Quantity	Unit	Unit Wt(lbs)	Item Wt(lbs)
Oil-Dri (Inside 55 gal drum)	4.000	PINTS	0.420	1.680

Waste Parameters

Waste Parameter	Remaining Weight %	Actual Weight Lbs
Iron-based Metals/Alloys	100.000	195.390
Aluminum-based Metals/Alloys	0.000	0.000
Other metals	0.000	55.000
Other Inorganic Materials	0.000	1.680
Cellulosics	0.000	0.000
Rubber	0.000	5.500
Plastic (Waste Materials)	0.000	5.000
Inorganic matrix	0.000	0.000
Organic matrix	0.000	0.000
Soils/gravel	0.000	0.000
Steel (packaging materials)	0.000	59.000
Plastic (packaging materials)	0.000	18.000
Cellulosics Packaging	0.000	0.000

Analysis Esignature History

Esig Approval Id	User Id	Esignature Date	Comment
2667583	MSORENSON	11-DEC-2013 07:42	rework
2660836	SPHILLIPS	27-NOV-2013 13:39	
2660833	SPHILLIPS	27-NOV-2013 13:39	

Batch Id RTR13-00305 **Container Id** 10350236 **Analysis Id** 0000093851

Container Type A drum, 55 Gallon Drum (17H) **Analysis Status** Pass

RTR Date 27-NOV-2013 14:50 **Gross Weight** 145.530 Lbs **Net Weight** 84.530 Lbs

Equipment Z-213-101 **Waste Matrix Code** S5300 **IDC** RF-337 Plastics, Teflon, Washables, PVC

Recording Id 1RTR13-00165 **Procedure Id** INST-OI-12 **Revision** 52 **Approval Level** SPM

Is Test Pattern Resolution Ok? Yes **Start Side** A **Replicate** No **OIO** No

Audio Visual Ok? Yes **Operator** SPHILLIPS

Result Comment This drum contains plastic waste in the form of sheeting.
AK concurs with the recommended IDC, RF-337, for container 10350236. No AKR or NCR is necessary. CHD 12/03/13

Package

IDC Correct Yes **Recommended IDC** RF-337 **Summary Category** S5000

Idc Change Reason Drum contains greater than 50% plastic waste

Rigid Liner Present? No **LinerType** NO LINER

Liner Punctured? N/A **Sharp Objects?** No

Liner Lid Present? No **Sharp Objects Are Protected?** Yes

Liner Lid Deformed? N/A **Layers Of Confinement** 3

Fill Factor 90

Bag Closure Method Twisted and Taped

Liquids

Liquid Present? Yes **Internal Container with Liquid** Yes

Internal Container with Liquid .25 pints **LA Candidate** No

Liquid Between Liner & Drum 0 pints **Containerized Liquid**

Total Liquid Amount .25 pints **Containerized Liquid Amt** 0 pints

Other Liquids 0 pints **Comment** 0.25 pints of liquid in a large poly bottle located at bottom of waste

Prohibited Liquids Present Yes **Comment** containerized liquid greater than 60 mils.

Contents-Drum or Box

	Value	Comment		Value	Comment
Lead?	Yes, Acceptable	scrap lead	**Mercury Present?**	No	
Wet Cell Batteries?	No		**Explosives?**	No	
Prohibited Compressed Gases?	Yes	aerosol can	**PCBs Present?**	No	
Aerosol Cans?	Yes	aerosol can	**PCB Mass (lbs)**	0	
Non-Mixed Hazardous Waste Present?	No		**Sealed Containers Over 4L?**	Yes	large poly bottle

Non-Radionuclide Pyrophoric Materials Present? No

Waste exhibiting the characteristics of Ignitability, Corrosivity or Reactivity Present? No

Wastes Incompatible with backfill, seal and panel closure materials, container and packaging materials,shipping container or other wastes? No

Impenetrable Dense Objects? No

Waste Material Items

Packaging Materials

Material Item	Quantity	Unit	Unit Wt(lbs)	Item Wt(lbs)
Drum plastic bag	2.000	EACH	1.000	2.000

Waste Items byWeight

Material Item	Quantity	Unit	Unit Wt(lbs)	Item Wt(lbs)
paper and rags	1.000	EACH	10.000	10.000
large poly bottle	1.000	EACH	5.000	5.000
scrap lead	1.000	EACH	0.250	0.250
metal debris	1.000	EACH	20.000	20.000
Plastic bag for waste	1.000	EACH	0.250	0.250
Aerosol Can	1.000	EACH	0.240	0.240

Batch Id RTR13-00305 **Container Id** 10350236 **Analysis Id** 0000093851

Waste Items by Volume

Material Item	Quantity	Unit	Unit Wt(lbs)	Item Wt(lbs)
Vermiculite (95 gm/liter) .125 lb/pint	10.000	PINTS	0.125	1.250
Liquids for Other Inorganics	0.250	PINTS	1.000	0.250

Waste Parameters

Waste Parameter	Remaining Weight %	Actual Weight Lbs
Iron-based Metals/Alloys	0.000	20.240
Aluminum-based Metals/Alloys	0.000	0.000
Other metals	0.000	0.250
Other Inorganic Materials	0.000	1.500
Cellulosics	0.000	10.000
Rubber	0.000	0.000
Plastic (Waste Materials)	100.000	52.540
Inorganic matrix	0.000	0.000
Organic matrix	0.000	0.000
Soils/gravel	0.000	0.000
Steel (packaging materials)	0.000	59.000
Plastic (packaging materials)	0.000	2.000
Cellulosics Packaging	0.000	0.000

Analysis Esignature History

Esig Approval Id	User Id	Esignature Date	Comment
2663956	CHINKLE	03-DEC-2013 07:26	This batch is returned for rework. AK does not concur with the recommended IDC change for container 10351592. CHD 12/03/13
2660959	SPHILLIPS	27-NOV-2013 14:50	

Batch Id RTR13-00305 **Container Id** 10368780 **Analysis Id** 0000093853

Container Type A drum, 55 Gallon Drum (17H) **Analysis Status** Pass

RTR Date 27-NOV-2013 15:42 **Gross Weight** 352.800 Lbs **Net Weight** 292.800 Lbs

Equipment Z-213-101 **Waste Matrix Code** S5112 **IDC** RF-480 Non-special Source Metal

Recording Id 1RTR13-00165 **Procedure Id** INST-OI-12 **Revision** 52 **Approval Level** SPM

Is Test Pattern Resolution Ok? Yes **Start Side** A **Replicate** No **OIO** No

Audio Visual Ok? Yes **Operator** SPHILLIPS

Result Comment This drum contains metal debris in the form of piping, sheeting and lead.
AK concurs with the recommended IDC, RF-480, for container 10368780. No AKR or NCR is necessary. CHD 12/03/13
Rework: Disregard the operators description of the waste. The remaining contents of container appears to be piping, metal sheeting, angle iron, metal brackets, and metal plates with screws. MS 12/11/13

Package

IDC Correct Yes **Recommended IDC** RF-480 **Summary Category** S5000

Idc Change Reason Drum contains greater than 50% metal debris with lead

Rigid Liner Present? No **LinerType** NO LINER

Liner Punctured? N/A **Sharp Objects?** No

Liner Lid Present? No **Sharp Objects Are Protected?** Yes

Liner Lid Deformed? N/A **Layers Of Confinement** 1

Fill Factor 85

Bag Closure Method Twisted and Taped

Liquids

Liquid Present? No **Internal Container with Liquid** No

Internal Container with Liquid 0 pints **LA Candidate** No

Liquid Between Liner & Drum 0 pints **Containerized Liquid**

Total Liquid Amount 0 pints **Containerized Liquid Amt** 0 pints

Other Liquids 0 pints **Comment**

Prohibited Liquids Present No **Comment**

Contents-Drum or Box

	Value	Comment		Value	Comment
Lead?	Yes, Acceptable	lead sheeting	**Mercury Present?**	No	
Wet Cell Batteries?	No		**Explosives?**	No	
Prohibited Compressed Gases?	No		**PCBs Present?**	No	
Aerosol Cans?	No		**PCB Mass (lbs)**	0	
Non-Mixed Hazardous Waste Present?	No		**Sealed Containers Over 4L?**	No	

Non-Radionuclide Pyrophoric Materials Present? No

Waste exhibiting the characteristics of Ignitability, Corrosivity or Reactivity Present? No

Wastes Incompatible with backfill, seal and panel closure materials, container and packaging materials,shipping container or other wastes? No

Impenetrable Dense Objects? Yes - Unacceptable unable to penatrate lead sheeting. 40% of the waste

Waste Material Items

Packaging Materials

Material Item	Quantity	Unit	Unit Wt(lbs)	Item Wt(lbs)
Drum plastic bag	1.000	EACH	1.000	1.000

Waste Items byWeight

Material Item	Quantity	Unit	Unit Wt(lbs)	Item Wt(lbs)
plastic waste	1.000	EACH	5.000	5.000
lead sheeting	1.000	EACH	100.000	100.000
Cardboard liner	1.000	EACH	4.000	4.000

Batch Id RTR13-00305 **Container Id** 10368780 **Analysis Id** 0000093853

Waste Items by Volume

Material Item	Quantity	Unit	Unit Wt(lbs)	Item Wt(lbs)
Oil-Dri (Inside 55 gal drum)	12.000	PINTS	0.420	5.040

Waste Parameters

Waste Parameter	Remaining Weight %	Actual Weight Lbs
Iron-based Metals/Alloys	100.000	178.760
Aluminum-based Metals/Alloys	0.000	0.000
Other metals	0.000	100.000
Other Inorganic Materials	0.000	5.040
Cellulosics	0.000	4.000
Rubber	0.000	0.000
Plastic (Waste Materials)	0.000	5.000
Inorganic matrix	0.000	0.000
Organic matrix	0.000	0.000
Soils/gravel	0.000	0.000
Steel (packaging materials)	0.000	59.000
Plastic (packaging materials)	0.000	1.000
Cellulosics Packaging	0.000	0.000

Analysis Esignature History

Esig Approval Id	User Id	Esignature Date	Comment
2667585	MSORENSON	11-DEC-2013 07:48	rework
2663953	CHINKLE	03-DEC-2013 07:26	This batch is returned for rework. AK does not concur with the recommended IDC change for container 10351592. CHD 12/03/13
2661077	SPHILLIPS	27-NOV-2013 15:42	

Batch Id RTR13-00305 **Container Id** 10217957 **Analysis Id** 0000093856

Container Type A drum, 55 Gallon Drum (17H) **Analysis Status** Pass

RTR Date 27-NOV-2013 16:03 **Gross Weight** 467.460 Lbs **Net Weight** 391.460 Lbs

Equipment Z-213-101 **Waste Matrix Code** S3143 **IDC** RF-005 Evaporator Salts

Recording Id 1RTR13-00165 **Procedure Id** INST-OI-12 **Revision** 52 **Approval Level** SPM

Is Test Pattern Resolution Ok? Yes **Start Side** A **Replicate** No **OIO** No

Audio Visual Ok? Yes **Operator** SPHILLIPS

Result Comment This drum contains Salt.

Package

IDC Correct Yes **Recommended IDC** **Summary Category** S3000

Idc Change Reason

Rigid Liner Present? Yes **LinerType** TYPE 1

Liner Punctured? Yes **Sharp Objects?** No

Liner Lid Present? Yes **Sharp Objects Are Protected?** Yes

Liner Lid Deformed? No **Layers Of Confinement** 1

Fill Factor 80

Bag Closure Method Twisted and Taped

Liquids

Liquid Present? No **Internal Container with Liquid** No

Internal Container with Liquid 0 pints **LA Candidate** No

Liquid Between Liner & Drum 0 pints **Containerized Liquid**

Total Liquid Amount 0 pints **Containerized Liquid Amt** 0 pints

Other Liquids 0 pints **Comment**

Prohibited Liquids Present No **Comment**

Contents-Drum or Box

	Value	Comment		Value	Comment
Lead?	No		**Mercury Present?**	No	
Wet Cell Batteries?	No		**Explosives?**	No	
Prohibited Compressed Gases?	No		**PCBs Present?**	No	
Aerosol Cans?	No		**PCB Mass (lbs)**	0	
Non-Mixed Hazardous Waste Present?	No		**Sealed Containers Over 4L?**	No	

Non-Radionuclide Pyrophoric Materials Present? No

Waste exhibiting the characteristics of Ignitability, Corrosivity or Reactivity Present? No

Wastes Incompatible with backfill, seal and panel closure materials, container and packaging materials,shipping container or other wastes? No

Impenetrable Dense Objects? No

Waste Material Items

Packaging Materials

Material Item	Quantity	Unit	Unit Wt(lbs)	Item Wt(lbs)
90 mil liner	1.000	EACH	16.000	16.000
Drum plastic bag	1.000	EACH	1.000	1.000

Waste Items byWeight

Material Item	Quantity	Unit	Unit Wt(lbs)	Item Wt(lbs)

Waste Items by Volume

Material Item	Quantity	Unit	Unit Wt(lbs)	Item Wt(lbs)

Batch Id RTR13-00305 **Container Id** 10217957 **Analysis Id** 0000093856

Waste Parameters

Waste Parameter	Remaining Weight %	Actual Weight Lbs
Iron-based Metals/Alloys	0.000	0.000
Aluminum-based Metals/Alloys	0.000	0.000
Other metals	0.000	0.000
Other Inorganic Materials	100.000	391.460
Cellulosics	0.000	0.000
Rubber	0.000	0.000
Plastic (Waste Materials)	0.000	0.000
Inorganic matrix	0.000	0.000
Organic matrix	0.000	0.000
Soils/gravel	0.000	0.000
Steel (packaging materials)	0.000	59.000
Plastic (packaging materials)	0.000	17.000
Cellulosics Packaging	0.000	0.000

Analysis Esignature History

Esig Approval Id	User Id	Esignature Date	Comment
2661106	SPHILLIPS	27-NOV-2013 16:03	

Batch Id RTR13-00305 **Container Id** 10368007 **Analysis Id** 0000093858

Container Type A drum, 55 Gallon Drum (17H) **Analysis Status** Pass

RTR Date 27-NOV-2013 16:22 **Gross Weight** 119.070 Lbs **Net Weight** 58.070 Lbs

Equipment Z-213-101 **Waste Matrix Code** S5390 **IDC** RF-900 LSA Paper, Plastic, etc.

Recording Id 1RTR13-00165 **Procedure Id** INST-OI-12 **Revision** 52 **Approval Level** SPM

Is Test Pattern Resolution Ok? Yes **Start Side** A **Replicate** No **OIO** No

Audio Visual Ok? Yes **Operator** SPHILLIPS

Result Comment This drum contains plastic waste in the form of sheeting.
AK concurs with the recommended IDC, RF-900, for container 10368007. No AKR or NCR is necessary. CHD 12/03/13

Package

IDC Correct Yes **Recommended IDC** RF-900 **Summary Category** S5000

Idc Change Reason drum contains greater than 50% plastic waste

Rigid Liner Present? No **LinerType** NO LINER

Liner Punctured? N/A **Sharp Objects?** No

Liner Lid Present? No **Sharp Objects Are Protected?** Yes

Liner Lid Deformed? N/A **Layers Of Confinement** 3

Fill Factor 95

Bag Closure Method Twisted and Taped

Liquids

Liquid Present? No **Internal Container with Liquid** No

Internal Container with Liquid 0 pints **LA Candidate** No

Liquid Between Liner & Drum 0 pints **Containerized Liquid**

Total Liquid Amount 0 pints **Containerized Liquid Amt** 0 pints

Other Liquids 0 pints **Comment**

Prohibited Liquids Present No **Comment**

Contents-Drum or Box

	Value	Comment		Value	Comment
Lead?	No		**Mercury Present?**	No	
Wet Cell Batteries?	No		**Explosives?**	No	
Prohibited Compressed Gases?	No		**PCBs Present?**	No	
Aerosol Cans?	No		**PCB Mass (lbs)**	0	
Non-Mixed Hazardous Waste Present?	No		**Sealed Containers Over 4L?**	No	

Non-Radionuclide Pyrophoric Materials Present? No

Waste exhibiting the characteristics of Ignitability, Corrosivity or Reactivity Present? No

Wastes Incompatible with backfill, seal and panel closure materials, container and packaging materials,shipping container or other wastes? No

Impenetrable Dense Objects? No

Waste Material Items

Packaging Materials

Material Item	Quantity	Unit	Unit Wt(lbs)	Item Wt(lbs)
Drum plastic bag	2.000	EACH	1.000	2.000

Waste Items byWeight

Material Item	Quantity	Unit	Unit Wt(lbs)	Item Wt(lbs)
metal debris	1.000	EACH	8.000	8.000
paper and rags	1.000	EACH	15.000	15.000
Plastic bag for waste	1.000	EACH	0.250	0.250

Waste Items by Volume

Material Item	Quantity	Unit	Unit Wt(lbs)	Item Wt(lbs)
Oil-Dri (Inside 55 gal drum)	12.000	PINTS	0.420	5.040

Batch Id RTR13-00305 **Container Id** 10368007 **Analysis Id** 0000093858

Waste Parameters

Waste Parameter	Remaining Weight %	Actual Weight Lbs
Iron-based Metals/Alloys	0.000	8.000
Aluminum-based Metals/Alloys	0.000	0.000
Other metals	0.000	0.000
Other Inorganic Materials	0.000	5.040
Cellulosics	0.000	15.000
Rubber	0.000	0.000
Plastic (Waste Materials)	100.000	30.030
Inorganic matrix	0.000	0.000
Organic matrix	0.000	0.000
Soils/gravel	0.000	0.000
Steel (packaging materials)	0.000	59.000
Plastic (packaging materials)	0.000	2.000
Cellulosics Packaging	0.000	0.000

Analysis Esignature History

Esig Approval Id	User Id	Esignature Date	Comment
2663954	CHINKLE	03-DEC-2013 07:26	This batch is returned for rework. AK does not concur with the recommended IDC change for container 10351592. CHD 12/03/13
2661126	SPHILLIPS	27-NOV-2013 16:22	

Batch Id RTR13-00305 **Container Id** 10351592 **Analysis Id** 0000093861

Container Type A drum, 55 Gallon Drum (17H) **Analysis Status** Pass

RTR Date 27-NOV-2013 17:44 **Gross Weight** 183.015 **Lbs** **Net Weight** 122.015 **Lbs**

Equipment Z-213-101 **Waste Matrix Code** S5490 **IDC** RF-760 RFP Debris

Recording Id 1RTR13-00165 **Procedure Id** INST-OI-12 **Revision** 52 **Approval Level** SPM

Is Test Pattern Resolution Ok? Yes **Start Side** A **Replicate** No **OIO** No

Audio Visual Ok? Yes **Operator** SPHILLIPS

Result Comment This drum contains Respirator Canisters.
AK does not concur with the recommended IDC change from UN-000 to RF-950 for container 10351592 because waste is debris from Pad 1 Cells 1& 2. Instead, AK recommends an IDC of RF-760. CHD 12/03/13
Recommended an IDC of RF-760 per AK comment. MS 12/03/13
AK concurs with the recommended IDC, RF-760, for container 10351592. No AKR or NCR is necessary. CHD 12/04/13

Package

IDC Correct Yes **Recommended IDC** RF-760 **Summary Category** S5000

Idc Change Reason This drum contains greater than 50% Respirator canisters

Rigid Liner Present? No **LinerType** NO LINER

Liner Punctured? N/A **Sharp Objects?** No

Liner Lid Present? No **Sharp Objects Are Protected?** Yes

Liner Lid Deformed? N/A **Layers Of Confinement** 3

Fill Factor 95

Bag Closure Method Twisted and Taped

Liquids

Liquid Present? Yes **Internal Container with Liquid** Yes

Internal Container with Liquid .75 pints **LA Candidate** No

Liquid Between Liner & Drum 0 pints **Containerized Liquid**

Containerized Liquid Amt 0 pints

Total Liquid Amount .75 pints

Other Liquids 0 pints **Comment** two aerosol cans one with 0.25 pints and one with 0.50 pints both are located at bottom of drum. Total amount of liquid 0.75 pints

Prohibited Liquids Present Yes **Comment** containerized liquid greater than 60 mils

Contents-Drum or Box

	Value	Comment		Value	Comment
Lead?	No		**Mercury Present?**	No	
Wet Cell Batteries?	No		**Explosives?**	No	
Prohibited Compressed Gases?	Yes	Two aerosol cans	**PCBs Present?**	No	
Aerosol Cans?	Yes	Two aerosol cans	**PCB Mass (lbs)**	0	
Non-Mixed Hazardous Waste Present?	No		**Sealed Containers Over 4L?**	No	

Non-Radionuclide Pyrophoric Materials Present? No

Waste exhibiting the characteristics of Ignitability, Corrosivity or Reactivity Present? No

Wastes Incompatible with backfill, seal and panel closure materials, container and packaging materials,shipping container or other wastes? No

Impenetrable Dense Objects? No

Waste Material Items

Packaging Materials

Material Item	Quantity	Unit	Unit Wt(lbs)	Item Wt(lbs)
Drum plastic bag	2.000	EACH	1.000	2.000

Batch Id RTR13-00305 **Container Id** 10351592 **Analysis Id** 0000093861

Waste Items byWeight

Material Item	Quantity	Unit	Unit Wt(lbs)	Item Wt(lbs)
batteries	2.000	EACH	0.250	0.500
plastic waste	1.000	EACH	8.000	8.000
rubber	1.000	EACH	15.000	15.000
metal debris	1.000	EACH	10.000	10.000
Plastic bag for waste	1.000	EACH	0.250	0.250
Aerosol Can	2.000	EACH	0.240	0.480

Waste Items by Volume

Material Item	Quantity	Unit	Unit Wt(lbs)	Item Wt(lbs)
Oil-Dri (Inside 55 gal drum)	8.000	PINTS	0.420	3.360
Liquids for Other Inorganics	0.750	PINTS	1.000	0.750

Waste Parameters

Waste Parameter	Remaining Weight %	Actual Weight Lbs
Iron-based Metals/Alloys	0.000	10.480
Aluminum-based Metals/Alloys	70.000	58.573
Other metals	0.000	0.500
Other Inorganic Materials	0.000	4.110
Cellulosics	30.000	25.103
Rubber	0.000	15.000
Plastic (Waste Materials)	0.000	8.250
Inorganic matrix	0.000	0.000
Organic matrix	0.000	0.000
Soils/gravel	0.000	0.000
Steel (packaging materials)	0.000	59.000
Plastic (packaging materials)	0.000	2.000
Cellulosics Packaging	0.000	0.000

Analysis Esignature History

Esig Approval Id	User Id	Esignature Date	Comment
2664654	CHINKLE	04-DEC-2013 05:55	Batch is promoted. chd 12/04/13
2664470	MSORENSON	03-DEC-2013 15:10	AK rework
2663955	CHINKLE	03-DEC-2013 07:26	This batch is returned for rework. AK does not concur with the recommended IDC change for container 10351592. CHD 12/03/13
2661181	SPHILLIPS	27-NOV-2013 17:44	

Batch Id RTR13-00305 **Container Id** 10276372 **Analysis Id** 0000093876

Container Type A drum, 55 Gallon Drum (17H) **Analysis Status** Pass

RTR Date 30-NOV-2013 10:33 **Gross Weight** 238.140 Lbs **Net Weight** 163.140 Lbs

Equipment Z-213-101 **Waste Matrix Code** S5420 **IDC** BL-020 Non-compressible, Non-combustible

Recording Id 1RTR13-00165 **Procedure Id** INST-OI-12 **Revision** 52 **Approval Level** SPM

Is Test Pattern Resolution Ok? Yes **Start Side** A **Replicate** No **OIO** No

Audio Visual Ok? Yes **Operator** DMOORE

Result Comment Remaining waste appears to be cans, > 4 liter cans, small cans, different sized pipe, pipe with dampers, ducting pipe, square metal trays, tool, and misc metals.

Package

IDC Correct Yes **Recommended IDC** **Summary Category** S5000

Idc Change Reason

Rigid Liner Present? Yes **LinerType** TYPE 1

Liner Punctured? Yes **Sharp Objects?** No

Liner Lid Present? Yes **Sharp Objects Are Protected?** Yes

Liner Lid Deformed? No **Layers Of Confinement** 2

Fill Factor 95

Bag Closure Method Twisted and Taped

Liquids

Liquid Present? No **Internal Container with Liquid** No

Internal Container with Liquid 0 pints **LA Candidate** No

Liquid Between Liner & Drum 0 pints **Containerized Liquid**

Total Liquid Amount 0 pints **Containerized Liquid Amt** 0 pints

Other Liquids 0 pints **Comment**

Prohibited Liquids Present No **Comment**

Contents-Drum or Box

	Value	Comment		Value	Comment
Lead?	No		**Mercury Present?**	No	
Wet Cell Batteries?	No		**Explosives?**	No	
Prohibited Compressed Gases?	No		**PCBs Present?**	No	
Aerosol Cans?	No		**PCB Mass (lbs)**	0	
Non-Mixed Hazardous Waste Present?	No		**Sealed Containers Over 4L?**	Yes	sealed cans 4 3/8 by 24 inches

Non-Radionuclide Pyrophoric Materials Present? No

Waste exhibiting the characteristics of Ignitability, Corrosivity or Reactivity Present? No

Wastes Incompatible with backfill, seal and panel closure materials, container and packaging materials,shipping container or other wastes? No

Impenetrable Dense Objects? No

Waste Material Items

Packaging Materials

Material Item	Quantity	Unit	Unit Wt(lbs)	Item Wt(lbs)
90 mil liner	1.000	EACH	16.000	16.000

Waste Items byWeight

Material Item	Quantity	Unit	Unit Wt(lbs)	Item Wt(lbs)
filter media	1.000	EACH	4.000	4.000
sealed 4 3/8 by 24 inch cans	1.000	EACH	6.000	6.000
plastic bagging, tubing, small containers	1.000	EACH	10.000	10.000
Plastic bag for waste	1.000	EACH	0.250	0.250

Waste Items by Volume

Material Item	Quantity	Unit	Unit Wt(lbs)	Item Wt(lbs)

Batch Id RTR13-00305 **Container Id** 10276372 **Analysis Id** 0000093876

Waste Parameters

Waste Parameter	Remaining Weight %	Actual Weight Lbs
Iron-based Metals/Alloys	100.000	148.890
Aluminum-based Metals/Alloys	0.000	0.000
Other metals	0.000	0.000
Other Inorganic Materials	0.000	0.000
Cellulosics	0.000	4.000
Rubber	0.000	0.000
Plastic (Waste Materials)	0.000	10.250
Inorganic matrix	0.000	0.000
Organic matrix	0.000	0.000
Soils/gravel	0.000	0.000
Steel (packaging materials)	0.000	59.000
Plastic (packaging materials)	0.000	16.000
Cellulosics Packaging	0.000	0.000

Analysis Esignature History

Esig Approval Id	User Id	Esignature Date	Comment
2661368	DMOORE	30-NOV-2013 10:33	

Batch Id RTR13-00305 **Container Id** 10276379 **Analysis Id** 0000093877

Container Type A drum, 55 Gallon Drum (17H) **Analysis Status** Pass

RTR Date 30-NOV-2013 10:54 **Gross Weight** 163.170 Lbs **Net Weight** 88.170 Lbs

Equipment Z-213-101 **Waste Matrix Code** S5420 **IDC** BL-020 Non-compressible, Non-combustible

Recording Id 1RTR13-00165 **Procedure Id** INST-OI-12 **Revision** 52 **Approval Level** SPM

Is Test Pattern Resolution Ok? Yes **Start Side** A **Replicate** No **OIO** No

Audio Visual Ok? Yes **Operator** DMOORE

Result Comment Remaining waste appears to be cans, > 4 liter cans, vents, pipe, large light metal tray, ducting pipe, square vent pieces, and misc metals.

Package

IDC Correct Yes **Recommended IDC** **Summary Category** S5000

Idc Change Reason

Rigid Liner Present? Yes **LinerType** TYPE 1

Liner Punctured? Yes **Sharp Objects?** No

Liner Lid Present? Yes **Sharp Objects Are Protected?** Yes

Liner Lid Deformed? No **Layers Of Confinement** 2

Fill Factor 95

Bag Closure Method Twisted and Taped

Liquids

Liquid Present? No **Internal Container with Liquid** No

Internal Container with Liquid 0 pints **LA Candidate** No

Liquid Between Liner & Drum 0 pints **Containerized Liquid**

Total Liquid Amount 0 pints **Containerized Liquid Amt** 0 pints

Other Liquids 0 pints **Comment**

Prohibited Liquids Present No **Comment**

Contents-Drum or Box

	Value	Comment		Value	Comment
Lead?	No		**Mercury Present?**	No	
Wet Cell Batteries?	No		**Explosives?**	No	
Prohibited Compressed Gases?	No		**PCBs Present?**	No	
Aerosol Cans?	No		**PCB Mass (lbs)**	0	
Non-Mixed Hazardous Waste Present?	No		**Sealed Containers Over 4L?**	Yes	sealed 4 3/8 by 24 inch cans

Non-Radionuclide Pyrophoric Materials Present? No

Waste exhibiting the characteristics of Ignitability, Corrosivity or Reactivity Present? No

Wastes Incompatible with backfill, seal and panel closure materials, container and packaging materials,shipping container or other wastes? No

Impenetrable Dense Objects? No

Waste Material Items

Packaging Materials

Material Item	Quantity	Unit	Unit Wt(lbs)	Item Wt(lbs)
90 mil liner	1.000	EACH	16.000	16.000

Waste Items byWeight

Material Item	Quantity	Unit	Unit Wt(lbs)	Item Wt(lbs)
filter media	1.000	EACH	6.000	6.000
plastics, bagging, sm containers, tubing, bottle	1.000	EACH	15.000	15.000
sealed cans 4 3/8 by 24 inches	1.000	EACH	15.000	15.000
Plastic bag for waste	1.000	EACH	0.250	0.250

Waste Items by Volume

Material Item	Quantity	Unit	Unit Wt(lbs)	Item Wt(lbs)

Batch Id RTR13-00305 **Container Id** 10276379 **Analysis Id** 0000093877

Waste Parameters

Waste Parameter	Remaining Weight %	Actual Weight Lbs
Iron-based Metals/Alloys	100.000	66.920
Aluminum-based Metals/Alloys	0.000	0.000
Other metals	0.000	0.000
Other Inorganic Materials	0.000	0.000
Cellulosics	0.000	6.000
Rubber	0.000	0.000
Plastic (Waste Materials)	0.000	15.250
Inorganic matrix	0.000	0.000
Organic matrix	0.000	0.000
Soils/gravel	0.000	0.000
Steel (packaging materials)	0.000	59.000
Plastic (packaging materials)	0.000	16.000
Cellulosics Packaging	0.000	0.000

Analysis Esignature History

Esig Approval Id	User Id	Esignature Date	Comment
2661372	DMOORE	30-NOV-2013 10:54	

Batch Id RTR13-00305 **Container Id** 10276372 **Analysis Id** 0000093879

Container Type A drum, 55 Gallon Drum (17H) **Analysis Status** Pass

RTR Date 30-NOV-2013 11:25 **Gross Weight** 238.140 Lbs **Net Weight** 163.140 Lbs

Equipment Z-213-101 **Waste Matrix Code** S5420 **IDC** BL-020 Non-compressible, Non-combustible

Recording Id 1RTR13-00165 **Procedure Id** INST-OI-12 **Revision** 52 **Approval Level** SPM

Is Test Pattern Resolution Ok? Yes **Start Side** A **Replicate** No **OIO** Yes

Audio Visual Ok? Yes **Operator** JCUMMINGS

Result Comment Contents of this drum is primarily metal cans.

Package

IDC Correct Yes **Recommended IDC** **Summary Category** S5000

Idc Change Reason

Rigid Liner Present? Yes **LinerType** TYPE 1

Liner Punctured? Yes **Sharp Objects?** No

Liner Lid Present? Yes **Sharp Objects Are Protected?** Yes

Liner Lid Deformed? No **Layers Of Confinement** 2

Fill Factor 95

Bag Closure Method Twisted and Taped

Liquids

Liquid Present? No **Internal Container with Liquid** No

Internal Container with Liquid 0 pints **LA Candidate** No

Liquid Between Liner & Drum 0 pints **Containerized Liquid**

Total Liquid Amount 0 pints **Containerized Liquid Amt** 0 pints

Other Liquids 0 pints **Comment**

Prohibited Liquids Present No **Comment**

Contents-Drum or Box

	Value	Comment		Value	Comment
Lead?	No		**Mercury Present?**	No	
Wet Cell Batteries?	No		**Explosives?**	No	
Prohibited Compressed Gases?	No		**PCBs Present?**	No	
Aerosol Cans?	No		**PCB Mass (lbs)**	0	
Non-Mixed Hazardous Waste Present?	No		**Sealed Containers Over 4L?**	Yes	metal cans 20" x 3"

Non-Radionuclide Pyrophoric Materials Present? No

Waste exhibiting the characteristics of Ignitability, Corrosivity or Reactivity Present? No

Wastes Incompatible with backfill, seal and panel closure materials, container and packaging materials,shipping container or other wastes? No

Impenetrable Dense Objects? No

Waste Material Items

Packaging Materials

Material Item	Quantity	Unit	Unit Wt(lbs)	Item Wt(lbs)
90 mil liner	1.000	EACH	16.000	16.000

Waste Items byWeight

Material Item	Quantity	Unit	Unit Wt(lbs)	Item Wt(lbs)
metal can 20" x 3"	1.000	EACH	2.000	2.000
plastic bagging, bottles and sheeting	1.000	EACH	8.000	8.000
filter media	1.000	EACH	5.000	5.000
Plastic bag for waste	1.000	EACH	0.250	0.250

Waste Items by Volume

Material Item	Quantity	Unit	Unit Wt(lbs)	Item Wt(lbs)

Batch Id RTR13-00305 **Container Id** 10276372 **Analysis Id** 0000093879

Waste Parameters

Waste Parameter	Remaining Weight %	Actual Weight Lbs
Iron-based Metals/Alloys	100.000	149.890
Aluminum-based Metals/Alloys	0.000	0.000
Other metals	0.000	0.000
Other Inorganic Materials	0.000	0.000
Cellulosics	0.000	5.000
Rubber	0.000	0.000
Plastic (Waste Materials)	0.000	8.250
Inorganic matrix	0.000	0.000
Organic matrix	0.000	0.000
Soils/gravel	0.000	0.000
Steel (packaging materials)	0.000	59.000
Plastic (packaging materials)	0.000	16.000
Cellulosics Packaging	0.000	0.000

RTR Independent Observation

Obsolete	Performed	User Name	Checklist	Answer
No	09-DEC-2013 15:55	KHUGHES	1.Was an independent observation performed?	Yes
			2.Were all items on the recording media identified correctly in WTS?	Yes
			3.Do you agree with the operator?	No

Comment No significant differences between original and OIO.

Independent Observation Esignature History

Esig Approval Id	User Id	Esignature Date		Comment
2667123	KHUGHES	09-DEC-2013 15:55	valid	

Analysis Esignature History

Esig Approval Id	User Id	Esignature Date	Comment
2661378	JCUMMINGS	30-NOV-2013 11:25	

Batch Id RTR13-00305 **Container Id** 10276379 **Analysis Id** 0000093881

Container Type A drum, 55 Gallon Drum (17H) **Analysis Status** Pass

RTR Date 30-NOV-2013 11:48 **Gross Weight** 163.170 Lbs **Net Weight** 88.170 Lbs

Equipment Z-213-101 **Waste Matrix Code** S5420 **IDC** BL-020 Non-compressible, Non-combustible

Recording Id 1RTR13-00165 **Procedure Id** INST-OI-12 **Revision** 52 **Approval Level** SPM

Is Test Pattern Resolution Ok? Yes **Start Side** A **Replicate** Yes **OIO** No

Audio Visual Ok? Yes **Operator** JCUMMINGS

Result Comment Contents of this drum is primarily metal cans.

Package

IDC Correct Yes **Recommended IDC** **Summary Category** S5000

Idc Change Reason

Rigid Liner Present? Yes **LinerType** TYPE 1

Liner Punctured? Yes **Sharp Objects?** No

Liner Lid Present? Yes **Sharp Objects Are Protected?** Yes

Liner Lid Deformed? No **Layers Of Confinement** 2

Fill Factor 85

Bag Closure Method Twisted and Taped

Liquids

Liquid Present? No **Internal Container with Liquid** No

Internal Container with Liquid 0 pints **LA Candidate** No

Liquid Between Liner & Drum 0 pints **Containerized Liquid**

Total Liquid Amount 0 pints **Containerized Liquid Amt** 0 pints

Other Liquids 0 pints **Comment**

Prohibited Liquids Present No **Comment**

Contents-Drum or Box

	Value	Comment		Value	Comment
Lead?	No		**Mercury Present?**	No	
Wet Cell Batteries?	No		**Explosives?**	No	
Prohibited Compressed Gases?	No		**PCBs Present?**	No	
Aerosol Cans?	No		**PCB Mass (lbs)**	0	
Non-Mixed Hazardous Waste Present?	No		**Sealed Containers Over 4L?**	Yes	metal can 20" x 3"

Non-Radionuclide Pyrophoric Materials Present? No

Waste exhibiting the characteristics of Ignitability, Corrosivity or Reactivity Present? No

Wastes Incompatible with backfill, seal and panel closure materials, container and packaging materials,shipping container or other wastes? No

Impenetrable Dense Objects? No

Waste Material Items

Packaging Materials

Material Item	Quantity	Unit	Unit Wt(lbs)	Item Wt(lbs)
90 mil liner	1.000	EACH	16.000	16.000

Waste Items byWeight

Material Item	Quantity	Unit	Unit Wt(lbs)	Item Wt(lbs)
plastic bagging, sheeting and poly bottles	1.000	EACH	10.000	10.000
filter media	1.000	EACH	3.000	3.000
metal can 20" x 3"	1.000	EACH	2.000	2.000
Plastic bag for waste	1.000	EACH	0.250	0.250

Waste Items by Volume

Material Item	Quantity	Unit	Unit Wt(lbs)	Item Wt(lbs)

Batch Id RTR13-00305 **Container Id** 10276379 **Analysis Id** 0000093881

Waste Parameters

Waste Parameter	Remaining Weight %	Actual Weight Lbs
Iron-based Metals/Alloys	100.000	74.920
Aluminum-based Metals/Alloys	0.000	0.000
Other metals	0.000	0.000
Other Inorganic Materials	0.000	0.000
Cellulosics	0.000	3.000
Rubber	0.000	0.000
Plastic (Waste Materials)	0.000	10.250
Inorganic matrix	0.000	0.000
Organic matrix	0.000	0.000
Soils/gravel	0.000	0.000
Steel (packaging materials)	0.000	59.000
Plastic (packaging materials)	0.000	16.000
Cellulosics Packaging	0.000	0.000

Analysis Esignature History

Esig Approval Id	User Id	Esignature Date	Comment
2661383	JCUMMINGS	30-NOV-2013 11:48	

------End of RTR Analysis Report------

AMWTP
Advanced Mixed Waste Treatment Project

AMWTP

Checklist Report

Date: 12-Sep-2014

Time: 13:17

Batch Id RTR13-00305 **Open Date** 27-NOV-13 **Close Date** 30-NOV-13

Reviewer KRISANN HUGHES **Approval Level** Independent Technical Reviewer

Approval Date 09-DEC-13 **Review Iteration** 1

Question Text	Answer	Requirement	Comment
1. Is the Batch Data Report (BDR) and Quality Assurance (QA) documentation complete with the following: o Real-Time Radiography (RTR) Batch Coversheet o Table of Contents (manual review only) o RTR Analysis reports o Replicate Scan o Replicate Comparison o Independent Observation o ITR checklist (Form-1412, manual review only) o Form-1491, Batch Data Report Supplemental Comment Form (manual review only) o Associated NCRs (referenced in Waste Tracking System [WTS]) o Audio/Video Recording References?	Yes		
2. Are there 20 containers or less in the batch?	Yes		
3. Was the image quality indicator (IQI) satisfactory?	Yes		
4. Does every container in the batch reference an audio/video recording?	Yes		
5. Is there a completed radiography data analysis for each container in the batch?	Yes		
6. Was each RTR Operator qualified at the time of the radiography event?	Yes		
7. Was the data generated in a technically correct manner using the correct revision of INST-OI-12, Real-Time Radiography Operations (Drum)?	Yes		
8. Was the correct procedure and revision documented on all analysis reports?	Yes		
9. Has the E-signature History review been performed?	Yes		
10. Does the RTR operator confirm that the physical form matched the waste stream description and waste matrix code?	Yes		
11. Does the packaging weight plus the net weight equal the gross weight of the container in the estimated waste material parameters?	Yes		
12. Were all entries into the waste material items section assigned to the correct waste material parameters?	Yes		
13. Has the description of rigid liners and layers of confinement been properly documented, as applicable?	Yes		
14. Was the presence or absence of prohibited items properly documented?	Yes		
15. If prohibited items were identified, have appropriate nonconformance reports (NCRs) been generated?	Yes		
16. Were the containers examined between October and April in compliance with the preheat requirements?	Yes		
17. Were all proper units and significant figures used for all reported volumes/weights?	Yes		
18. Was there a valid replicate scan performed (at least one container per day, or once per testing batch,	Yes		Container 10276379, observation date 30NOV13. No significant differences between original and

Batch Id RTR13-00305 **Open Date** 27-NOV-13 **Close Date** 30-NOV-13

Reviewer KRISANN HUGHES **Approval Level** Independent Technical Reviewer

Approval Date 09-DEC-13 **Review Iteration** 1

Question Text	Answer	Requirement	Comment
whichever is less frequent)? o Record the container number, the replicate observation date in the comment section of this checklist. o Record any issues or concerns in the batch comment section.			replicate exams.
19. Was there a valid Operator Independent Observation (OIO) (not the replicate) performed (at least one container per day, or once per testing batch, whichever is less frequent)? o Record the container number and the OIO date in the comment section of this checklist. o Record any issues or concerns in the batch comment section.	Yes		Container 10276372, observation date 30NOV13. No significant differences between original and OIO.
20. Were any significant differences identified that would affect the original disposition of the replicate and OIO, or affect data quality objectives (DQOs)? If so, ensure an NCR was generated and WTS flagged.	No		
21. Were the RTR quality assurance objectives (QAOs) met? o Precision o Accuracy o Completeness o Comparability	Yes		
22. Were any NCRs generated for containers containing prohibited items, or any non-conforming conditions that failed to meet DQOs or QAOs? o If so, include the NCRs, as appropriate, in the BDR.	Yes		
23. Were the rework requirements clearly identified in WTS or on the BDR?	Yes		

Batch Id RTR13-00305 **Open Date** 27-NOV-13 **Close Date** 30-NOV-13

Reviewer KRISANN HUGHES **Approval Level** Independent Technical Reviewer

Approval Date 10-JAN-14 **Review Iteration** 2

Question Text	Answer	Requirement	Comment
1. Is the Batch Data Report (BDR) and Quality Assurance (QA) documentation complete with the following: o Real-Time Radiography (RTR) Batch Coversheet o Table of Contents (manual review only) o RTR Analysis reports o Replicate Scan o Replicate Comparison o Independent Observation o ITR checklist (Form-1412, manual review only) o Form-1491, Batch Data Report Supplemental Comment Form (manual review only) o Associated NCRs (referenced in Waste Tracking System [WTS]) o Audio/Video Recording References?	Yes		
2. Are there 20 containers or less in the batch?	Yes		
3. Was the image quality indicator (IQI) satisfactory?	Yes		
4. Does every container in the batch reference an audio/video recording?	Yes		
5. Is there a completed radiography data analysis for each container in the batch?	Yes		
6. Was each RTR Operator qualified at the time of the radiography event?	Yes		
7. Was the data generated in a technically correct manner using the correct revision of INST-OI-12, Real-Time Radiography Operations (Drum)?	Yes		
8. Was the correct procedure and revision documented on all analysis reports?	Yes		
9. Has the E-signature History review been performed?	Yes		
10. Does the RTR operator confirm that the physical form matched the waste stream description and waste matrix code?	Yes		
11. Does the packaging weight plus the net weight equal the gross weight of the container in the estimated waste material parameters?	Yes		
12. Were all entries into the waste material items section assigned to the correct waste material parameters?	Yes		
13. Has the description of rigid liners and layers of confinement been properly documented, as applicable?	Yes		
14. Was the presence or absence of prohibited items properly documented?	Yes		
15. If prohibited items were identified, have appropriate nonconformance reports (NCRs) been generated?	Yes		
16. Were the containers examined between October and April in compliance with the preheat requirements?	Yes		
17. Were all proper units and significant figures used for all reported volumes/weights?	Yes		
18. Was there a valid replicate scan performed (at least one container per day, or once per testing batch,	Yes		Container 10276379, observation date 30NOV13. No significant differences between original and

Batch Id RTR13-00305 **Open Date** 27-NOV-13 **Close Date** 30-NOV-13

Reviewer KRISANN HUGHES **Approval Level** Independent Technical Reviewer

Approval Date 10-JAN-14 **Review Iteration** 2

Question Text	Answer	Requirement	Comment
whichever is less frequent)? o Record the container number, the replicate observation date in the comment section of this checklist. o Record any issues or concerns in the batch comment section.			replicate exams.
19. Was there a valid Operator Independent Observation (OIO) (not the replicate) performed (at least one container per day, or once per testing batch, whichever is less frequent)? o Record the container number and the OIO date in the comment section of this checklist. o Record any issues or concerns in the batch comment section.	Yes		Container 10276372, observation date 30NOV13. No significant differences between original and OIO.
20. Were any significant differences identified that would affect the original disposition of the replicate and OIO, or affect data quality objectives (DQOs)? If so, ensure an NCR was generated and WTS flagged.	No		
21. Were the RTR quality assurance objectives (QAOs) met? o Precision o Accuracy o Completeness o Comparability	Yes		
22. Were any NCRs generated for containers containing prohibited items, or any non-conforming conditions that failed to meet DQOs or QAOs? o If so, include the NCRs, as appropriate, in the BDR.	Yes		
23. Were the rework requirements clearly identified in WTS or on the BDR?	Yes		

Batch Id RTR13-00305 **Open Date** 27-NOV-13 **Close Date** 30-NOV-13

Reviewer DAVE MARQUARDT **Approval Level** SPM Data Validation

Approval Date 13-JAN-14 **Review Iteration** 1

Question Text	Answer	Requirement	Comment
(1) Has the batch received a Data Generation Level Independent Technical Review?	Yes	MP-TRUW-8.2, C3-10b(1)	
(2) Is the Independent Technical Review checklist complete?	Yes	MP-TRUW-8.2, C3-10b(1)	
(3) When identified, were polychlorinated biphenyls (PCBs), mercury, lead, or other hazardous contaminants consistent with the waste stream acceptable knowledge (AK) Summary Report(s) and/or AK documentation?	Yes	MP-TRUW-8.2, C4-3	
(4) Are any ignitable, corrosive, or reactive wastes identified in this waste?	Yes	MP-TRUW-8.2, C4-3	RF-005 waste.
(5) Are the packaging configurations identified on the real-time radiography (RTR) consistent with the waste stream AK Summary Report(s) and/or AK documentation?	Yes	MP-TRUW-8.2, C4-3	
(6) Do the containers in this batch contain typical waste items consistent with waste stream AK Summary Report(s) and/or AK documentation?	Yes	MP-TRUW-8.2, C4-3	
(7) Are the Waste Matrix Codes (WMCs) and physical form descriptions consistent with AK?	Yes	MP-TRUW-8.2, C4-3	
(8) Have all AK discrepancies been resolved and have all AK Resolution checklists been approved? Reference all waste stream AK documentation used in review of this data package.	N/A	MP-TRUW-8.2, C4-3	No discrepancies. RPT-TRUW-05. RPT-TRUW-06. RPT-TRUW-12. RPT-TRUW-56.
(9) Have all applicable Quality Assurance Objectives (QAOs) been met, including precision, accuracy, completeness, and comparability, by using the appropriate acceptance criteria for each as specified in MP-TRUW-8.2, Quality Assurance Project Plan Section C3-4? Precision ¿ Verified prior to use by tuning precisely enough to demonstrate compliance with QAOs through viewing an image test pattern, as evidenced by a satisfactory Image Quality Indicator (IQI). ¿ Have discrepancies, if any, between radiography operators been reconciled? Accuracy ¿ Use of a target to tune the image for maximum sharpness as evidenced by a satisfactory IQI and by requiring operators to successfully identify 100% of the required items in a training container during initial and subsequent qualifications. Completeness ¿ An audio/videotape (or equivalent media) of the radiography examination and a validated radiography data form will be obtained for 100% of the retrievably stored waste container in the program for all waste containers subject to radiography. Comparability ¿ Use of standardized radiography procedures and operator qualifications.	Yes	MP-TRUW-8.2, C3-4a	
(10) Do the waste container contents match the WMC, waste stream description and identify the absence of prohibited items?	Yes	MP-TRUW-8.2, C1-3 and B3-11	

Batch Id RTR13-00305 **Open Date** 27-NOV-13 **Close Date** 30-NOV-13

Reviewer DAVE MARQUARDT **Approval Level** SPM Data Validation

Approval Date 13-JAN-14 **Review Iteration** 1

Question Text	Answer	Requirement	Comment
(11) If residual liquids exist in the container, is an estimate of quantity given?	Yes	MP-TRUW-8.2, C1-3	
(12) Do the individual container reports contain the (a) IDC, (b) Waste Matrix Code, (c) audio/video recording reference, (d) gross container weight, (e) waste material parameter weights, and (f) signature and date of examination?	Yes	MP-TRUW-8.2, C1-3 and C3-11a	
(13) Have the IDC, WMC, and/or waste stream for all containers in the batch remained the same as originally assigned by the historical designation? If not, note the container number in the comment field and notify the Acceptable Knowledge Expert (AKE) if NCR does not exist on the WMC and IDC change.	No	MP-TRUW-8.2, C1-3 and C3-4a	Drums 10350236, 10368780, 10368007 and 10351592 all received IDC changes from their Unknown designations.
(14) Was a replicate scan performed by an independent operator on at least one container per day or once per testing batch, whichever is less frequent, by a qualified radiography operator that was not involved in the original scan of the waste container?	Yes	MP-TRUW-8.2, B1-3, C3-4a, and C3-10b(1)	
(15) Has an independent observation of one scan (not the replicate) been performed by a qualified operator that was not involved in the original scan of the waste container, at a rate of once per day or once per batch, whichever is less frequent? Record date of observation and any issues or concerns in the comment section.	Yes	MP-TRUW-8.2, C1-3 and C3-4a	Container 10276372, observation date 30NOV13. No issues.
(16) Did personnel having current qualifications perform all RTR examinations?	Yes	MP-TRUW-8.1, Appendix F	
(17) Verify the correct procedure and revision number were used for all containers in this batch.	Yes	MP-TRUW-8.2, C3-4a	
(18) Verify the audio and video checks were performed and are satisfactory.	Yes	MP-TRUW-8.2, C3-4a	
(19) Verify that there are 20 or fewer containers in the batch.	Yes	MP-TRUW-8.2, C1-3	
(20) Does the data for all containers within this batch meet the review, validation, and verification requirements? · Are proper units (e.g. Liters or pounds) and significant figure used? · Is the BDR complete (all pages identified in the BDR and numbered accordingly)? - RTR Batch Coversheet - Table of Contents (manual review only) - RTR Analysis reports - Replicate Scan - Replicate Comparison - Independent Observation - Form-1412, ITR checklist - Associated NCRs - Form, 1491, Batch Data Report Supplemental Comment Form, as applicable - Audio/Video Recording References	Yes	MP-TRUW-8.2, C3 10b(2)	
(21) Review all NCR(s) (open and closed). Can the batch be approved?	Yes	MP-TRUW-8.2, C3-13	
(22) Is all data associated with this BDR acceptable for signature release?	Yes	MP-TRUW-8.2, C3 10b(2)	

Batch Id RTR13-00305 **Open Date** 27-NOV-13 **Close Date** 30-NOV-13

Esignature History

Esig Approval ID	User ID	Esig Date	Approval Level	Comments
2674446	DMARQUARDT	13-JAN-14	SPM	Reviewed and validated. Approve.
2673674	KHUGHES	10-JAN-14	ITR	promote to SPM
2667174	KHUGHES	09-DEC-13	ITR	return for rework

AMWTP
Advanced Mixed Waste Treatment Project

AMWTP

Non-Conformance Report

Date: 12-Sep-2014

Time: 13:18

*****Batch NCR(s)*****

Batch Type	RTR	Batch ID	RTR13-00305		
Trackwise Number		**Status**		**Opened Date**	**Closed Date**

*****Container NCR(s)*****

Container ID *or related Batch ID*	Trackwise Number	Status	Opened Date	Closed Date
10019796	82508	OPEN	27-NOV-13	
10019796	82509	OPEN	27-NOV-13	
10019796	82510	OPEN	27-NOV-13	
10019796	8726	OPEN	06-AUG-04	
10027353	82502	OPEN	27-NOV-13	
10027353	82503	OPEN	27-NOV-13	
10276372	82535	CLOSED	30-NOV-13	23-JAN-14
10276379	82536	CLOSED	30-NOV-13	23-JAN-14
10350236	82511	CLOSED	27-NOV-13	23-JAN-14
10350236	82512	CLOSED	27-NOV-13	23-JAN-14
10350236	82513	CLOSED	27-NOV-13	23-JAN-14
10351592	82520	OPEN	27-NOV-13	
10351592	82521	OPEN	27-NOV-13	
10368780	82518	CLOSED	27-NOV-13	23-JAN-14
10027353	33684	CLOSED	14-AUG-07	03-JUL-14
10027367	33672	CLOSED	14-AUG-07	03-JUL-14

*****End of Non-Conformance Report*****

AMWTP

Advanced Mixed Waste Treatment Project

AMWTP

RTR Replicate Comparison Report

Date: 12-Sep-2014

Time: 13:18

RTR Batch Id: RTR13-00305 **Container Id:** 10276379 **Equipment Id:** Z-213-101

Container type Description: **drum, 55 Gallon Drum (17H)** Gen-IDC: **BL-020** Gross Weight(Lbs): **163.17**

	Original Analysis		Replicate Analysis	
Analysis Id / Date:	0000093877	30-NOV-2013 10:54	0000093881	30-NOV-2013 11:48
Procedure /Revision:	INST-OI-12	52	INST-OI-12	52
Recording Media Id:	1RTR13-00165		1RTR13-00165	
Starting Position:	A		A	
Is Test Pattern Resolution Ok?	Y		Y	
Audio Visual Ok?	Y		Y	
Personnel Name:	DIANNA MOORE		JOHN CUMMINGS	
IDC Ok? / Recommended IDC:	Y		Y	
IDC Change Reason:				
Summary Category / Waste matrix Code:	S5000	S5420	S5000	S5420
Packaging				
Rigid Liner Present?	Y		Y	
Liner Type Code:	TYPE 1		TYPE 1	
Liner Punctured:	Y		Y	
Liner Lid Deformed:	N		N	
Layers Of Confinement:	2		2	
Sharp Objects?	N		N	
Sharp Objects Protected?	Y		Y	
Fill Factor(%):	95		85	
Bag Closure Method:	Twisted and Taped		Twisted and Taped	
Liner Lid Present?:	Y		Y	
Liquids: (Volume in Pints)				
Liquid Present?	N		N	
Internal Container with Liquid?	0		0	
Containerized Liquid	N		N	
Other Liquids:	0		0	
Internal Container with Liquid Amt:	0		0	
Liquid Between Liner and Drum:	0		0	
Containerized Liquid:	0		0	
Total Liquid Amount:	0		0	
LA Candidate?	N		N	
Prohibited Liquids Present?	N		N	

Contents:	Y/N	Comments	Y/N	Comments
Sealed Containers over 4L?	Y	sealed 4 3/8 by 24 inch cans	Y	metal can 20" x 3"
Lead Present?	N		N	
Explosives Present?	N		N	
Mercury Present?	N		N	
Wet Cell Batteries Detected?	N		N	

AMWTP
Advanced Mixed Waste Treatment Project

AMWTP

RTR Replicate Comparison Report

Date: 12-Sep-2014

Time: 13:18

RTR Batch Id: RTR13-00305 **Container Id:** 10276379 **Equipment Id:** Z-213-101

	Original Analysis	Replicate Analysis
Prohibited Compressed Gas Present	N	N
PCBs Present?	N	N
PCB Mass (lbs)	0	0
Non-Radionuclide Pyrophoric Materials Present?	N	N
Waste exhibiting the characteristics of ignitability, Corrosivity or reactivity Present?	N	N
Non-Mixed Hazardous Waste Present	N	N
Waste Incompatibles with backfill, Seal and panel closure materials, container and packaging material, shipping container or other wastes?	N	N
Impenetrable Dense Objects?	N	N
Result Comment:	Remaining waste appears to be cans, > 4 liter cans, vents, pipe, large light metal tray, ducting pipe, square vent pieces, and misc metals.	Contents of this drum is primarily metal cans.

----------E-signature----------

Esig Approval ID	User ID	Signature Date	Comment
2667112	KHUGHES	09-DEC-13	valid

-----End of RTR Replicate Comparison Report-----

AMWTP
Advanced Mixed Waste Treatment Project

AMWTP

RTR OIO Comparison Report

Date: 12-Sep-2014

Time: 13:19

RTR Batch Id: RTR13-00305 **Container Id:** 10276372 **Equipment Id:** Z-213-101

Container type Description: **drum, 55 Gallon Drum (17H)** Gen-IDC: **BL-020** Gross Weight(Lbs): **238.14**

	Original Analysis		OIO Analysis	
Analysis Id / Date:	0000093876	30-NOV-2013 10:33	0000093879	30-NOV-2013 11:25
Procedure /Revision:	INST-OI-12	52	INST-OI-12	52
Recording Media Id:	1RTR13-00165		1RTR13-00165	
Starting Position:	A		A	
Is Test Pattern Resolution Ok?	Y		Y	
Audio Visual Ok?	Y		Y	
Personnel Name:	DIANNA MOORE		JOHN CUMMINGS	
IDC Ok? / Recommended IDC:	Y		Y	
IDC Change Reason:				
Summary Category / Waste matrix Code:	S5000	S5420	S5000	S5420
Packaging				
Rigid Liner Present?	Y		Y	
Liner Type Code:	TYPE 1		TYPE 1	
Liner Punctured:	Y		Y	
Liner Lid Deformed:	N		N	
Layers Of Confinement:	2		2	
Sharp Objects?	N		N	
Sharp Objects Protected?	Y		Y	
Fill Factor(%):	95		95	
Bag Closure Method:	Twisted and Taped		Twisted and Taped	
Liner Lid Present?:	Y		Y	
Liquids: (Volume in Pints)				
Liquid Present?	N		N	
Internal Container with Liquid?	0		0	
Containerized Liquid	N		N	
Other Liquids:	0		0	
Internal Container with Liquid Amt:	0		0	
Liquid Between Liner and Drum:	0		0	
Containerized Liquid:	0		0	
Total Liquid Amount:	0		0	
LA Candidate?	N		N	
Prohibited Liquids Present?	N		N	

Contents:	Y/N	Comments	Y/N	Comments
Sealed Containers over 4L?	Y	sealed cans 4 3/8 by 24 inches	Y	metal cans 20" x 3"
Lead Present?	N		N	
Explosives Present?	N		N	
Mercury Present?	N		N	
Wet Cell Batteries Detected?	N		N	

AMWTP
Advanced Mixed Waste Treatment Project

AMWTP

RTR OIO Comparison Report

Date: 12-Sep-2014

Time: 13:19

RTR Batch Id: RTR13-00305 **Container Id:** 10276372 **Equipment Id:** Z-213-101

	Original Analysis	OIO Analysis
Prohibited Compressed Gas Present	N	N
PCBs Present?	N	N
PCB Mass (lbs)	0	0
Non-Radionuclide Pyrophoric Materials Present?	N	N
Waste exhibiting the characteristics of ignitability, Corrosivity or reactivity Present?	N	N
Non-Mixed Hazardous Waste Present	N	N
Waste Incompatibles with backfill, Seal and panel closure materials, container and packaging material, shipping container or other wastes?	N	N
Impenetrable Dense Objects?	N	N
Result Comment:	Remaining waste appears to be cans, > 4 liter cans, small cans, different sized pipe, pipe with dampers, ducting pipe, square metal trays, tool, and misc metals.	Contents of this drum is primarily metal cans.

----------E-signature----------

Esig Approval ID	User ID	Signature Date	Comment

-----End of RTR OIO Comparison Report-----

AMWTP
Advanced Mixed Waste Treatment Project

NON-CONFORMANCE REPORT

WIPP DATA - RTR

NCR #: 82508

Title: RTR Characterization	
Originator: Phillips, Samuel	**Date Opened:** 11/27/13
Responsible Dept: Plant Manager	**Batch #:** RTR13-00305
Container ID: 10019796	**Tag Applied:** Yes
Characterization Problem:	
Originator Sign By: Samuel Phillips	**Originator Sign Date:** 11/27/13

Production Comments: **Approved Remediation:**

Lead liner and a lead lined sealed container greater the 4L.

Performed By:	**Performed Date:**

Waste Programs Evaluation/Verification:

SPM Verification Complete By:	**SPM Verification Complete Date:**
MLLW/LLW Verification Complete By:	**MLLW/LLW Verification Complete Date:**

QA Closure Comments:

QA Add'l Action Reqd By:	**QA Add'l Action Reqd Date:**
QA Verification Complete By:	**QA Verification Comp Date:**

AMWTP
Advanced Mixed Waste Treatment Project

NON-CONFORMANCE REPORT

WIPP DATA - RTR

NCR #: 82509

Title: RTR Characterization	
Originator: Phillips, Samuel	**Date Opened:** 11/27/13
Responsible Dept: Plant Manager	**Batch #:** RTR13-00305
Container ID: 10019796	**Tag Applied:** Yes
Characterization Problem:	
Originator Sign By: Samuel Phillips	**Originator Sign Date:** 11/27/13

Production Comments:

Unable to penatrate lead liner and lead lined container in waste

Approved Remediation:

Performed By:	**Performed Date:**

Waste Programs Evaluation/Verification:

SPM Verification Complete By:	**SPM Verification Complete Date:**
MLLW/LLW Verification Complete By:	**MLLW/LLW Verification Complete Date:**

QA Closure Comments:

QA Add'l Action Reqd By:	**QA Add'l Action Reqd Date:**
QA Verification Complete By:	**QA Verification Comp Date:**

AMWTP
Advanced Mixed Waste Treatment Project

NON-CONFORMANCE REPORT

WIPP DATA - RTR

NCR #: 82510

Title: RTR Characterization	
Originator: Phillips, Samuel	**Date Opened:** 11/27/13
Responsible Dept: Plant Manager	**Batch #:** RTR13-00305
Container ID: 10019796	**Tag Applied:** Yes
Characterization Problem:	
Originator Sign By: Samuel Phillips	**Originator Sign Date:** 11/27/13

Production Comments:

large lead lined container located at center of waste.

Approved Remediation:

Performed By:	**Performed Date:**

Waste Programs Evaluation/Verification:

SPM Verification Complete By:	**SPM Verification Complete Date:**
MLLW/LLW Verification Complete By:	**MLLW/LLW Verification Complete Date:**

QA Closure Comments:

QA Add'l Action Reqd By:	**QA Add'l Action Reqd Date:**
QA Verification Complete By:	**QA Verification Comp Date:**

AMWTP
Advanced Mixed Waste Treatment Project

NON-CONFORMANCE REPORT

WIPP DATA - RTR

NCR #: 8726

Title: WIPP RTR Lead Lined	
Originator: Hamilton, Robert	**Date Opened:** 08/05/04
Responsible Dept: Plant Manager	**Batch #:** RTR04-00348
Container ID: 10019796	**Tag Applied:**
Characterization Problem:	
Originator Sign By: Robert Hamilton	**Originator Sign Date:** 08/05/04
Production Comments:	**Approved Remediation:**
Performed By:	**Performed Date:**
Waste Programs Evaluation/Verification:	
SPM Verification Complete By:	**SPM Verification Complete Date:**
MLLW/LLW Verification Complete By:	**MLLW/LLW Verification Complete Date:**
QA Closure Comments:	
QA Add'l Action Reqd By:	**QA Add'l Action Reqd Date:**
QA Verification Complete By:	**QA Verification Comp Date:**

AMWTP
Advanced Mixed Waste Treatment Project

NON-CONFORMANCE REPORT

WIPP DATA - RTR

NCR #: 82512

Title: RTR Characterization

Originator: Phillips, Samuel	**Date Opened:** 11/27/13
Responsible Dept: Plant Manager	**Batch #:** RTR13-00305
Container ID: 10350236	**Tag Applied:** Yes

Characterization Problem:

Originator Sign By: Samuel Phillips	**Originator Sign Date:** 11/27/13

Production Comments: **Approved Remediation:** **Supercompaction.**

Aerosol can
Completed review of container- waste consists of plastic bucket, poly bottles, paper/rags, small amount of metal debris. There is an empty unvented aerosol can lying at the top of the waste, next to the top chine of the container. There does not appear to be any dense items, structural pieces, or heavy metal, that would prevent treatment of this item by compaction in the facility. Recommend this container for treatment by compaction STallman 1/22/14

Performed By: Steve Tallman	**Performed Date:** 01/22/14

Waste Programs Evaluation/Verification:

SPM Verification: This container has been processed through RTR and Assay characterization. The data has been reviewed and determined to be acceptable for MLLW direct feed supercompaction. SPM has further verified that the task list has been set to a Process Code of SC, and supercompaction is shown as a required task for this container. This NCR is recomended for closure in preparation for supercompaction of this waste. KB 1/23/13

SPM Verification Complete By: Kenny Burnside	**SPM Verification Complete Date:** 01/23/14
MLLW/LLW Verification Complete By:	**MLLW/LLW Verification Complete Date:**

QA Closure Comments:

QA Verification: Verified in WTS the container has been successfully processed through RTR and Assay characterization. The RTR SME has reviewed the container data and has determined that there are no existing conditions that would preclude this container from being treated through supercompaction. The data has been reviewed and determined acceptable for MLLW direct feed supercompaction. Verified that the task list has been set to a Process Code of SC and supercompaction is shown as a required task for this container. No further action is required. C. Robison 01-23-14

QA Add'l Action Reqd By:	**QA Add'l Action Reqd Date:**
QA Verification Complete By: Camille Robison	**QA Verification Comp Date:** 01/23/14

AMWTP
Advanced Mixed Waste Treatment Project

NON-CONFORMANCE REPORT

WIPP DATA - RTR

NCR #: 82513

Title: RTR Characterization

Originator: Phillips, Samuel	**Date Opened:** 11/27/13
Responsible Dept: Plant Manager	**Batch #:** RTR13-00305
Container ID: 10350236	**Tag Applied:** Yes

Characterization Problem:

Originator Sign By: Samuel Phillips	**Originator Sign Date:** 11/27/13

Production Comments: **Approved Remediation:** **Supercompaction.**

Large poly bottle greater the 4L.

Performed By: Kenny Burnside	**Performed Date:** 01/23/14

Waste Programs Evaluation/Verification:

SPM Verification: This container has been processed through RTR and Assay characterization. The data has been reviewed and determined to be acceptable for MLLW direct feed supercompaction. SPM has further verified that the task list has been set to a Process Code of SC, and supercompaction is shown as a required task for this container. This NCR is recomended for closure in preparation for supercompaction of this waste. KB 1/23/13

SPM Verification Complete By: Kenny Burnside	**SPM Verification Complete Date:** 01/23/14
MLLW/LLW Verification Complete By:	**MLLW/LLW Verification Complete Date:**

QA Closure Comments:

QA Verification: Verified in WTS the container has been successfully processed through RTR and Assay characterization. The data has been reviewed and determined acceptable for MLLW direct feed supercompaction. Verified that the task list has been set to a Process Code of SC and supercompaction is shown as a required task for this container. No further action is required. C. Robison 01-23-14

QA Add'l Action Reqd By:	**QA Add'l Action Reqd Date:**
QA Verification Complete By: Camille Robison	**QA Verification Comp Date:** 01/23/14

DIVIDER

PAGE

AMWTP

Advanced Mixed Waste Treatment Project

AMWTP

Batch Report Coversheet

Date: 12-Sep-2014

Time: 13:22

Batch Type Real Time Radiography

Batch Report No. RTR14-00005

Batch Id RTR14-00005

Open Date 23-JAN-14 16:36:27

Close Date 25-JAN-14 16:59:07

Batch Status AP

Test Facility Idaho AMWTP

Equipment Id Z-213-101 RTR Station Left (213-101)

Container Id	IDC	Analysis Id	Date Examined	QC Type	Analysis Status	Operator
10135407	RF-002	0000094410	23-JAN-14 16:36:27	Original	P	KENT KEARN
10369057	BN-524	0000094414	24-JAN-14 10:31:14	Original	P	AARON ATWELL
10145322	RF-750	0000094416	24-JAN-14 11:38:03	Original	P	SETH OLDHAM
10339021	RF-095	0000094418	24-JAN-14 11:56:09	Original	P	AARON ATWELL
10425610	RF-004	0000094422	24-JAN-14 13:27:46	Original	P	DANNY GREEN
10494032	BN-600	0000094424	24-JAN-14 14:14:41	Original	P	DANNY GREEN
10042328	RF-337	0000094425	24-JAN-14 14:56:01	Original	P	DANNY GREEN
10313178	RF-750	0000094427	24-JAN-14 15:16:03	Original	P	DANNY GREEN
10494031	BN-600	0000094430	24-JAN-14 16:52:05	Original	P	DANNY GREEN
10494030	BN-600	0000094438	24-JAN-14 17:51:47	Original	P	DANNY GREEN
10323541	RF-750	0000094439	24-JAN-14 18:06:45	Original	P	SETH OLDHAM
10182410	RF-007	0000094441	25-JAN-14 11:46:18	Original	P	MICHAEL RICKS
10220519	RF-440	0000094444	25-JAN-14 12:02:20	Original	P	MICHAEL RICKS
10034756	RF-807	0000094446	25-JAN-14 12:22:52	Original	P	MICHAEL RICKS
10220519	RF-440	0000094448	25-JAN-14 13:23:54	RTR OIO	P	JOHN CUMMINGS
10034756	RF-807	0000094450	25-JAN-14 13:47:33	Replicate / Duplicate	P	JOHN CUMMINGS
10336333	RF-743	0000094451	25-JAN-14 14:18:46	Original	P	JOHN CUMMINGS
10368557	BN-524	0000094453	25-JAN-14 15:10:06	Original	P	KRISANN HUGHES
10054382	RF-421	0000094455	25-JAN-14 15:26:39	Original	P	JOHN CUMMINGS
10366291	RF-760	0000094456	25-JAN-14 15:44:12	Original	P	SETH OLDHAM
10453439	RF-760	0000094459	25-JAN-14 16:30:59	Original	P	KRISANN HUGHES
10456533	RF-760	0000094460	25-JAN-14 16:58:07	Original	P	SETH OLDHAM

INFORMATION ONLY

**********Batch Comments**********

Written By	Date	Comment
CHINKLE	28-JAN-14 08:24:59	28-JAN-14 CHINKLE AKE This batch is returned for rework. AK does not concur with the recommended IDC change for containers10456533, 10453439, 10368557, 10366291, 10323541 and 10145322. CHD 01/28/14
SOLDHAM	30-JAN-14 08:21:37	Rework complete.
CHINKLE	30-JAN-14 10:33:20	28-JAN-14 CHINKLE AKE This batch is returned for rework. AK does not concur with the recommended IDC change for containers10456533, 10453439, 10368557, 10366291, 10323541 and 10145322. CHD 01/28/14 30-JAN-14 CHINKLE AKE Batch is promoted. chd 1/30/14
RBTHOMPSON	01-FEB-14 16:11:35	ITR review complete.
RBTHOMPSON	01-FEB-14 16:11:35	Drum #10368557, Change the Liquid comment to read " .28 pints in the bagging throughout the waste'. Please review and correct
RBTHOMPSON	01-FEB-14 16:11:35	Drum #10453439, Change Drum bag total to 2. Change Plastic bag for waste total to 2. Please review and correct
RBTHOMPSON	01-FEB-14 16:11:35	Demote to OPS.
KHUGHES	03-FEB-14 07:27:01	completed rework
RBTHOMPSON	06-FEB-14 07:41:06	Promote to SPM
RBTHOMPSON	06-FEB-14 07:41:06	Reviewed rework as complete.
DMARQUARDT	07-FEB-14 15:49:51	Promote.
DMARQUARDT	07-FEB-14 15:49:52	Reviewed and validated. Approve.

**********Batch E-Signature History**********

Approval ID	User ID	Signature Date	Comment
2684481	SOLDHAM	30-JAN-2014 08:21:37	Rework complete.
2685874	RBTHOMPSON	01-FEB-2014 16:11:35	Demote to OPS.
2686090	KHUGHES	03-FEB-2014 07:27:01	completed rework
2688827	RBTHOMPSON	06-FEB-2014 07:41:06	Promote to SPM
2689824	DMARQUARDT	07-FEB-2014 15:49:52	Reviewed and validated. Approve.

***** End of Batch Report Coversheet Report *****

AMWTP
Advanced Mixed Waste Treatment Project

AMWTP
RTR Analysis Report

Date: 12-Sep-2014
Time: 13:23

Batch Id RTR14-00005 **Container Id** 10135407 **Analysis Id** 0000094410

Container Type A drum, 55 Gallon Drum (17H) **Analysis Status** Pass

RTR Date 23-JAN-2014 16:36 **Gross Weight** 577.710 Lbs **Net Weight** 501.710 Lbs
Equipment Z-213-101 **Waste Matrix Code** S3121 **IDC** RF-002 Second Stage Sludge
Recording Id 1RTR14-00007 **Procedure Id** INST-OI-12 **Revision** 52 **Approval Level** SPM
Is Test Pattern Resolution Ok? Yes **Start Side** A **Replicate** No **OIO** No
Audio Visual Ok? Yes **Operator** KKEARN
Result Comment Waste consists of a sludge

Package

IDC Correct Yes **Recommended IDC** **Summary Category** S3000
Idc Change Reason
Rigid Liner Present? Yes **LinerType** TYPE 1
Liner Punctured? Yes **Sharp Objects?** No
Liner Lid Present? Yes **Sharp Objects Are Protected?** Yes
Liner Lid Deformed? No **Layers Of Confinement** 1
Fill Factor 95
Bag Closure Method Twisted and Taped

Liquids

Liquid Present? No **Internal Container with Liquid** No
Internal Container with Liquid 0 pints **LA Candidate** No
Liquid Between Liner & Drum 0 pints **Containerized Liquid**
Total Liquid Amount 0 pints **Containerized Liquid Amt** 0 pints
Other Liquids 0 pints **Comment**
Prohibited Liquids Present No **Comment**

Contents-Drum or Box

	Value	Comment		Value	Comment
Lead?	No		Mercury Present?	No	
Wet Cell Batteries?	No		Explosives?	No	
Prohibited Compressed Gases?	No		PCBs Present?	No	
Aerosol Cans?	No		PCB Mass (lbs)	0	
Non-Mixed Hazardous Waste Present?	No		Sealed Containers Over 4L?	No	

Non-Radionuclide Pyrophoric Materials Present? No
Waste exhibiting the characteristics of Ignitability, Corrosivity or Reactivity Present? No
Wastes Incompatible with backfill, seal and panel closure materials, container and packaging materials,shipping container or other wastes? No
Impenetrable Dense Objects? No

Waste Material Items

Packaging Materials

Material Item	Quantity	Unit	Unit Wt(lbs)	Item Wt(lbs)
90 mil liner	1.000	EACH	16.000	16.000
Drum plastic bag	1.000	EACH	1.000	1.000

Waste Items byWeight

Material Item	Quantity	Unit	Unit Wt(lbs)	Item Wt(lbs)

Waste Items by Volume

Material Item	Quantity	Unit	Unit Wt(lbs)	Item Wt(lbs)

Batch Id RTR14-00005 **Container Id** 10135407 **Analysis Id** 0000094410

Waste Parameters

Waste Parameter	Remaining Weight %	Actual Weight Lbs
Iron-based Metals/Alloys	0.000	0.000
Aluminum-based Metals/Alloys	0.000	0.000
Other metals	0.000	0.000
Other Inorganic Materials	0.000	0.000
Cellulosics	0.000	0.000
Rubber	0.000	0.000
Plastic (Waste Materials)	0.000	0.000
Inorganic matrix	100.000	501.710
Organic matrix	0.000	0.000
Soils/gravel	0.000	0.000
Steel (packaging materials)	0.000	59.000
Plastic (packaging materials)	0.000	17.000
Cellulosics Packaging	0.000	0.000

Analysis Esignature History

Esig Approval Id	User Id	Esignature Date	Comment
2679147	KKEARN	23-JAN-2014 16:36	

Batch Id RTR14-00005 **Container Id** 10369057 **Analysis Id** 0000094414

Container Type A drum, 55 Gallon Drum (17H) **Analysis Status** Pass

RTR Date 24-JAN-2014 10:31 **Gross Weight** 396.900 Lbs **Net Weight** 335.900 Lbs

Equipment Z-213-101 **Waste Matrix Code** S5490 **IDC** BN-524 Pad 1 Cells 1 and 2 Non-PCB Debris

Recording Id 1RTR14-00007 **Procedure Id** INST-OI-12 **Revision** 52 **Approval Level** SPM

Is Test Pattern Resolution Ok? Yes **Start Side** A **Replicate** No **OIO** No

Audio Visual Ok? Yes **Operator** AATWELL

Result Comment Waste appears to be busted up pieces of glass.
AK concurs with the recommended IDC, BN-524, for container 10369057. No AKR or NCR is necessary. CHD 01/28/14

Package

IDC Correct Yes **Recommended IDC** BN-524 **Summary Category** S5000

Idc Change Reason Waste is debris in the form of busted up glass

Rigid Liner Present? No **LinerType** NO LINER

Liner Punctured? N/A **Sharp Objects?** No

Liner Lid Present? No **Sharp Objects Are Protected?** Yes

Liner Lid Deformed? N/A **Layers Of Confinement** 2

Fill Factor 85

Bag Closure Method Twisted and Taped

Liquids

Liquid Present? No **Internal Container with Liquid** No

Internal Container with Liquid 0 pints **LA Candidate** No

Liquid Between Liner & Drum 0 pints **Containerized Liquid**

Total Liquid Amount 0 pints **Containerized Liquid Amt** 0 pints

Other Liquids 0 pints **Comment**

Prohibited Liquids Present No **Comment**

Contents-Drum or Box

	Value	Comment		Value	Comment
Lead?	No		**Mercury Present?**	No	
Wet Cell Batteries?	No		**Explosives?**	No	
Prohibited Compressed Gases?	No		**PCBs Present?**	No	
Aerosol Cans?	No		**PCB Mass (lbs)**	0	
Non-Mixed Hazardous Waste Present?	No		**Sealed Containers Over 4L?**	No	

Non-Radionuclide Pyrophoric Materials Present? No

Waste exhibiting the characteristics of Ignitability, Corrosivity or Reactivity Present? No

Wastes Incompatible with backfill, seal and panel closure materials, container and packaging materials,shipping container or other wastes? No

Impenetrable Dense Objects? Yes - Unacceptable — aprox 50% of the waste in this container is impenetrable.

Waste Material Items

Packaging Materials

Material Item	Quantity	Unit	Unit Wt(lbs)	Item Wt(lbs)
Drum plastic bag	2.000	EACH	1.000	2.000

Waste Items byWeight

Material Item	Quantity	Unit	Unit Wt(lbs)	Item Wt(lbs)
Cardboard liner	1.000	EACH	4.000	4.000

Waste Items by Volume

Material Item	Quantity	Unit	Unit Wt(lbs)	Item Wt(lbs)
Oil-Dri (Inside 55 gal drum)	6.000	PINTS	0.420	2.520

Batch Id RTR14-00005 **Container Id** 10369057 **Analysis Id** 0000094414

Waste Parameters

Waste Parameter	Remaining Weight %	Actual Weight Lbs
Iron-based Metals/Alloys	0.000	0.000
Aluminum-based Metals/Alloys	0.000	0.000
Other metals	0.000	0.000
Other Inorganic Materials	100.000	331.900
Cellulosics	0.000	4.000
Rubber	0.000	0.000
Plastic (Waste Materials)	0.000	0.000
Inorganic matrix	0.000	0.000
Organic matrix	0.000	0.000
Soils/gravel	0.000	0.000
Steel (packaging materials)	0.000	59.000
Plastic (packaging materials)	0.000	2.000
Cellulosics Packaging	0.000	0.000

Analysis Esignature History

Esig Approval Id	User Id	Esignature Date	Comment
2680787	CHINKLE	28-JAN-2014 08:24	This batch is returned for rework. AK does not concur with the recommended IDC change for containers10456533, 10453439, 10368557, 10366291, 10323541 and 10145322. CHD 01/28/14
2679327	AATWELL	24-JAN-2014 10:31	

Batch Id RTR14-00005 **Container Id** 10145322 **Analysis Id** 0000094416

Container Type C drum, 83 Gallon **Analysis Status** Pass

RTR Date 24-JAN-2014 11:38 **Gross Weight** 800.415 Lbs **Net Weight** 656.415 Lbs

Equipment Z-213-101 **Waste Matrix Code** S5490 **IDC** RF-750 Pits 11 & 12 Debris

Recording Id 1RTR14-00007 **Procedure Id** INST-OI-12 **Revision** 52 **Approval Level** SPM

Is Test Pattern Resolution Ok? Yes **Start Side** A **Replicate** No **OIO** No

Audio Visual Ok? Yes **Operator** AATWELL

Result Comment Waste is primarily metal debris, pipe, sheet metal, angle iron, flat bar and misc metal debris.
AK does not concur with the recommended IDC of UN-00B for container 10145322 because waste is debris retrieved from Pits 11 and 12. Instead, AK recommends an IDC of RF-750. CHD 01/28/14
Rework to change IDC per AK. ESO 01/30/14
AK concurs with the recommended IDC, RF-750, for container 10145322. No AKR or NCR is necessary. CHD 01/30/14

Package

IDC Correct Yes **Recommended IDC** RF-750 **Summary Category** S5000

Idc Change Reason Per AK

Rigid Liner Present? No **LinerType** NO LINER

Liner Punctured? N/A **Sharp Objects?** No

Liner Lid Present? No **Sharp Objects Are Protected?** Yes

Liner Lid Deformed? N/A **Layers Of Confinement** 2

Fill Factor 95

Bag Closure Method Twisted and Taped

Liquids

Liquid Present? No **Internal Container with Liquid** No

Internal Container with Liquid 0 pints **LA Candidate** No

Liquid Between Liner & Drum 0 pints **Containerized Liquid**

Total Liquid Amount 0 pints **Containerized Liquid Amt** 0 pints

Other Liquids 0 pints **Comment**

Prohibited Liquids Present No **Comment**

Contents-Drum or Box

	Value	Comment		Value	Comment
Lead?	Yes, Acceptable	scrap lead	**Mercury Present?**	No	
Wet Cell Batteries?	No		**Explosives?**	No	
Prohibited Compressed Gases?	No		**PCBs Present?**	No	
Aerosol Cans?	No		**PCB Mass (lbs)**	0	
Non-Mixed Hazardous Waste Present?	No		**Sealed Containers Over 4L?**	No	

Non-Radionuclide Pyrophoric Materials Present? No

Waste exhibiting the characteristics of Ignitability, Corrosivity or Reactivity Present? No

Wastes Incompatible with backfill, seal and panel closure materials, container and packaging materials,shipping container or other wastes? No

Impenetrable Dense Objects? Yes - Unacceptable aprox bottom 5" of waste is impenetrable

Waste Material Items

Packaging Materials

Material Item	Quantity	Unit	Unit Wt(lbs)	Item Wt(lbs)
Drum plastic bag	2.000	EACH	1.000	2.000
55-GAL DRUM (17c)	1.000	EACH	59.000	59.000

Waste Items byWeight

Material Item	Quantity	Unit	Unit Wt(lbs)	Item Wt(lbs)
plastic waste	1.000	EACH	1.000	1.000
scrape lead	1.000	EACH	20.000	20.000

Batch Id RTR14-00005 **Container Id** 10145322 **Analysis Id** 0000094416

Waste Items by Volume

Material Item	Quantity	Unit	Unit Wt(lbs)	Item Wt(lbs)
Oil-Dri (Inside 55 gal drum)	75.000	PINTS	0.420	31.500

Waste Parameters

Waste Parameter	Remaining Weight %	Actual Weight Lbs
Iron-based Metals/Alloys	100.000	603.915
Aluminum-based Metals/Alloys	0.000	0.000
Other metals	0.000	20.000
Other Inorganic Materials	0.000	31.500
Cellulosics	0.000	0.000
Rubber	0.000	0.000
Plastic (Waste Materials)	0.000	1.000
Inorganic matrix	0.000	0.000
Organic matrix	0.000	0.000
Soils/gravel	0.000	0.000
Steel (packaging materials)	0.000	142.000
Plastic (packaging materials)	0.000	2.000
Cellulosics Packaging	0.000	0.000

Analysis Esignature History

Esig Approval Id	User Id	Esignature Date	Comment
2684842	CHINKLE	30-JAN-2014 10:33	Batch is promoted. chd 1/30/14
2684469	SOLDHAM	30-JAN-2014 08:13	
2680791	CHINKLE	28-JAN-2014 08:24	This batch is returned for rework. AK does not concur with the recommended IDC change for containers10456533, 10453439, 10368557, 10366291, 10323541 and 10145322. CHD 01/28/14
2679346	AATWELL	24-JAN-2014 11:38	

Batch Id RTR14-00005 **Container Id** 10339021 **Analysis Id** 0000094418

Container Type C drum, 83 Gallon **Analysis Status** Pass

RTR Date 24-JAN-2014 11:56 **Gross Weight** 443.205 Lbs **Net Weight** 300.205 Lbs

Equipment Z-213-101 **Waste Matrix Code** S3221 **IDC** RF-095 Sewer Sludge

Recording Id 1RTR14-00007 **Procedure Id** INST-OI-12 **Revision** 52 **Approval Level** SPM

Is Test Pattern Resolution Ok? Yes **Start Side** A **Replicate** No **OIO** No

Audio Visual Ok? Yes **Operator** AATWELL

Result Comment Waste appears to be sludge.

Package

IDC Correct Yes **Recommended IDC** **Summary Category** S3000

Idc Change Reason

Rigid Liner Present? No **LinerType** NO LINER

Liner Punctured? N/A **Sharp Objects?** No

Liner Lid Present? No **Sharp Objects Are Protected?** Yes

Liner Lid Deformed? N/A **Layers Of Confinement** 2

Fill Factor 85

Bag Closure Method Twisted and Taped

Liquids

Liquid Present? No **Internal Container with Liquid** No

Internal Container with Liquid 0 pints **LA Candidate** No

Liquid Between Liner & Drum 0 pints **Containerized Liquid**

Total Liquid Amount 0 pints **Containerized Liquid Amt** 0 pints

Other Liquids 0 pints **Comment**

Prohibited Liquids Present No **Comment**

Contents-Drum or Box

	Value	Comment		Value	Comment
Lead?	No		**Mercury Present?**	No	
Wet Cell Batteries?	No		**Explosives?**	No	
Prohibited Compressed Gases?	No		**PCBs Present?**	No	
Aerosol Cans?	No		**PCB Mass (lbs)**	0	
Non-Mixed Hazardous Waste Present?	No		**Sealed Containers Over 4L?**	No	

Non-Radionuclide Pyrophoric Materials Present? No

Waste exhibiting the characteristics of Ignitability, Corrosivity or Reactivity Present? No

Wastes Incompatible with backfill, seal and panel closure materials, container and packaging materials,shipping container or other wastes? No

Impenetrable Dense Objects? No

Waste Material Items

Packaging Materials

Material Item	Quantity	Unit	Unit Wt(lbs)	Item Wt(lbs)
Drum plastic bag	1.000	EACH	1.000	1.000
55-GAL DRUM (17c)	1.000	EACH	59.000	59.000

Waste Items byWeight

Material Item	Quantity	Unit	Unit Wt(lbs)	Item Wt(lbs)
Plastic bag for waste	1.000	EACH	0.250	0.250

Waste Items by Volume

Material Item	Quantity	Unit	Unit Wt(lbs)	Item Wt(lbs)

Batch Id RTR14-00005 **Container Id** 10339021 **Analysis Id** 0000094418

Waste Parameters

Waste Parameter	Remaining Weight %	Actual Weight Lbs
Iron-based Metals/Alloys	0.000	0.000
Aluminum-based Metals/Alloys	0.000	0.000
Other metals	0.000	0.000
Other Inorganic Materials	0.000	0.000
Cellulosics	0.000	0.000
Rubber	0.000	0.000
Plastic (Waste Materials)	0.000	0.250
Inorganic matrix	0.000	0.000
Organic matrix	100.000	299.955
Soils/gravel	0.000	0.000
Steel (packaging materials)	0.000	142.000
Plastic (packaging materials)	0.000	1.000
Cellulosics Packaging	0.000	0.000

Analysis Esignature History

Esig Approval Id	User Id	Esignature Date	Comment
2679348	AATWELL	24-JAN-2014 11:56	

Batch Id RTR14-00005 **Container Id** 10425610 **Analysis Id** 0000094422

Container Type 83u 83 Gallon unmarked and non-DOT apprvd cntr **Analysis Status** Pass

RTR Date 24-JAN-2014 13:27 **Gross Weight** 749.700 Lbs **Net Weight** 605.700 Lbs

Equipment Z-213-101 **Waste Matrix Code** S3150 **IDC** RF-004 Special Setups

Recording Id 1RTR14-00007 **Procedure Id** INST-OI-12 **Revision** 52 **Approval Level** SPM

Is Test Pattern Resolution Ok? Yes **Start Side** A **Replicate** No **OIO** No

Audio Visual Ok? Yes **Operator** DGREEN

Result Comment Waste consists of sludge.

Package

IDC Correct Yes **Recommended IDC** **Summary Category** S3000

Idc Change Reason

Rigid Liner Present? No **LinerType** NO LINER

Liner Punctured? N/A **Sharp Objects?** No

Liner Lid Present? No **Sharp Objects Are Protected?** Yes

Liner Lid Deformed? N/A **Layers Of Confinement** 2

Fill Factor 97

Bag Closure Method Twisted and Taped

Liquids

Liquid Present? No **Internal Container with Liquid** No

Internal Container with Liquid 0 pints **LA Candidate** No

Liquid Between Liner & Drum 0 pints **Containerized Liquid**

Total Liquid Amount 0 pints **Containerized Liquid Amt** 0 pints

Other Liquids 0 pints **Comment**

Prohibited Liquids Present No **Comment**

Contents-Drum or Box

	Value	Comment		Value	Comment
Lead?	No		**Mercury Present?**	No	
Wet Cell Batteries?	No		**Explosives?**	No	
Prohibited Compressed Gases?	No		**PCBs Present?**	No	
Aerosol Cans?	No		**PCB Mass (lbs)**	0	
Non-Mixed Hazardous Waste Present?	No		**Sealed Containers Over 4L?**	No	

Non-Radionuclide Pyrophoric Materials Present? No

Waste exhibiting the characteristics of Ignitability, Corrosivity or Reactivity Present? No

Wastes Incompatible with backfill, seal and panel closure materials, container and packaging materials,shipping container or other wastes? No

Impenetrable Dense Objects? No

Waste Material Items

Packaging Materials

Material Item	Quantity	Unit	Unit Wt(lbs)	Item Wt(lbs)
Drum plastic bag	2.000	EACH	1.000	2.000
55-GAL DRUM (17c)	1.000	EACH	59.000	59.000

Waste Items byWeight

Material Item	Quantity	Unit	Unit Wt(lbs)	Item Wt(lbs)

Waste Items bv Volume

Material Item	Quantity	Unit	Unit Wt(lbs)	Item Wt(lbs)

Batch Id RTR14-00005 **Container Id** 10425610 **Analysis Id** 0000094422

Waste Parameters

Waste Parameter	Remaining Weight %	Actual Weight Lbs
Iron-based Metals/Alloys	0.000	0.000
Aluminum-based Metals/Alloys	0.000	0.000
Other metals	0.000	0.000
Other Inorganic Materials	0.000	0.000
Cellulosics	0.000	0.000
Rubber	0.000	0.000
Plastic (Waste Materials)	0.000	0.000
Inorganic matrix	100.000	605.700
Organic matrix	0.000	0.000
Soils/gravel	0.000	0.000
Steel (packaging materials)	0.000	142.000
Plastic (packaging materials)	0.000	2.000
Cellulosics Packaging	0.000	0.000

Analysis Esignature History

Esig Approval Id	User Id	Esignature Date	Comment
2679360	DGREEN	24-JAN-2014 13:27	

Batch Id RTR14-00005 **Container Id** 10494032 **Analysis Id** 0000094424

Container Type 7A85 85 Gallon Open Head drum, DOT 7A **Analysis Status** Pass

RTR Date 24-JAN-2014 14:14 **Gross Weight** 238.140 Lbs **Net Weight** 158.140 Lbs

Equipment Z-213-101 **Waste Matrix Code** S5490 **IDC** BN-600 WMF-676 PCB Contaminated Debris

Recording Id 1RTR14-00007 **Procedure Id** INST-OI-12 **Revision** 52 **Approval Level** SPM

Is Test Pattern Resolution Ok? Yes **Start Side** A **Replicate** No **OIO** No

Audio Visual Ok? Yes **Operator** DGREEN

Result Comment Waste consists of metal - an AMWTP "silver" drum contains - crushed drums, wire, electrical terminal blocks.

Package

IDC Correct Yes **Recommended IDC** **Summary Category** S5000

Idc Change Reason

Rigid Liner Present? No **LinerType** NO LINER

Liner Punctured? N/A **Sharp Objects?** No

Liner Lid Present? No **Sharp Objects Are Protected?** Yes

Liner Lid Deformed? N/A **Layers Of Confinement** 2

Fill Factor 90

Bag Closure Method Twisted and Taped

Liquids

Liquid Present? Yes **Internal Container with Liquid** No

Internal Container with Liquid 0 pints **LA Candidate** No

Liquid Between Liner & Drum 0 pints **Containerized Liquid**

Total Liquid Amount .06 pints **Containerized Liquid Amt** 0 pints

Other Liquids .06 pints **Comment** liquid in bagging at the bottom of the waste

Prohibited Liquids Present Yes **Comment** Liquid with PCBs

Contents-Drum or Box

	Value	Comment		Value	Comment
Lead?	No		**Mercury Present?**	No	
Wet Cell Batteries?	No		**Explosives?**	No	
Prohibited Compressed Gases?	No		**PCBs Present?**	Yes - Prohibited	PCB IDC with liquid.
Aerosol Cans?	No		**PCB Mass (lbs)**	158.14	
Non-Mixed Hazardous Waste Present?	No		**Sealed Containers Over 4L?**	No	

Non-Radionuclide Pyrophoric Materials Present? No

Waste exhibiting the characteristics of Ignitability, Corrosivity or Reactivity Present? No

Wastes Incompatible with backfill, seal and panel closure materials, container and packaging materials,shipping container or other wastes? No

Impenetrable Dense Objects? No

Waste Material Items

Packaging Materials

Material Item	Quantity	Unit	Unit Wt(lbs)	Item Wt(lbs)

Waste Items byWeight

Material Item	Quantity	Unit	Unit Wt(lbs)	Item Wt(lbs)
plastic waste	1.000	EACH	5.000	5.000
lifting strap	1.000	EACH	6.000	6.000
Drum Bag	2.000	EACH	1.000	2.000

Waste Items by Volume

Material Item	Quantity	Unit	Unit Wt(lbs)	Item Wt(lbs)
Liquids for Other Inorganics	0.060	PINTS	1.000	0.060

Batch Id RTR14-00005 **Container Id** 10494032 **Analysis Id** 0000094424

Waste Parameters

Waste Parameter	Remaining Weight %	Actual Weight Lbs
Iron-based Metals/Alloys	100.000	148.080
Aluminum-based Metals/Alloys	0.000	0.000
Other metals	0.000	0.000
Other Inorganic Materials	0.000	0.060
Cellulosics	0.000	0.000
Rubber	0.000	1.500
Plastic (Waste Materials)	0.000	8.500
Inorganic matrix	0.000	0.000
Organic matrix	0.000	0.000
Soils/gravel	0.000	0.000
Steel (packaging materials)	0.000	80.000
Plastic (packaging materials)	0.000	0.000
Cellulosics Packaging	0.000	0.000

Analysis Esignature History

Esig Approval Id	User Id	Esignature Date	Comment
2679375	DGREEN	24-JAN-2014 14:14	

Batch Id RTR14-00005 **Container Id** 10042328 **Analysis Id** 0000094425

Container Type C drum, 83 Gallon **Analysis Status** Pass

RTR Date 24-JAN-2014 14:56 **Gross Weight** 249.165 Lbs **Net Weight** 105.165 Lbs

Equipment Z-213-101 **Waste Matrix Code** S5300 **IDC** RF-337 Plastics, Teflon, Washables, PVC

Recording Id 1RTR14-00007 **Procedure Id** INST-OI-12 **Revision** 52 **Approval Level** SPM

Is Test Pattern Resolution Ok? Yes **Start Side** A **Replicate** No **OIO** No

Audio Visual Ok? Yes **Operator** DGREEN

Result Comment Waste consists of plastic sheeting & a couple poly bottles.

Package

IDC Correct Yes **Recommended IDC** **Summary Category** S5000

Idc Change Reason

Rigid Liner Present? No **LinerType** NO LINER

Liner Punctured? N/A **Sharp Objects?** No

Liner Lid Present? No **Sharp Objects Are Protected?** Yes

Liner Lid Deformed? N/A **Layers Of Confinement** 3

Fill Factor 83

Bag Closure Method Twisted and Taped

Liquids

Liquid Present? Yes **Internal Container with Liquid** Yes

Internal Container with Liquid .09 pints **LA Candidate** No

Liquid Between Liner & Drum 0 pints **Containerized Liquid**

Total Liquid Amount .12 pints **Containerized Liquid Amt** 0 pints

Other Liquids .03 pints **Comment** Liquid in bagging, & liquid in a poly bottle at the bottom of the waste

Prohibited Liquids Present No **Comment**

Contents-Drum or Box

	Value	Comment		Value	Comment
Lead?	No		**Mercury Present?**	No	
Wet Cell Batteries?	No		**Explosives?**	No	
Prohibited Compressed Gases?	No		**PCBs Present?**	No	
Aerosol Cans?	No		**PCB Mass (lbs)**	0	
Non-Mixed Hazardous Waste Present?	No		**Sealed Containers Over 4L?**	No	

Non-Radionuclide Pyrophoric Materials Present? No

Waste exhibiting the characteristics of Ignitability, Corrosivity or Reactivity Present? No

Wastes Incompatible with backfill, seal and panel closure materials, container and packaging materials,shipping container or other wastes? No

Impenetrable Dense Objects? No

Waste Material Items

Packaging Materials

Material Item	Quantity	Unit	Unit Wt(lbs)	Item Wt(lbs)
Drum plastic bag	2.000	EACH	1.000	2.000
55-GAL DRUM (17c)	1.000	EACH	59.000	59.000

Waste Items byWeight

Material Item	Quantity	Unit	Unit Wt(lbs)	Item Wt(lbs)
metal waste	1.000	EACH	1.000	1.000
paper, rags, coveralls	1.000	EACH	5.000	5.000
safety shoes	1.000	EACH	4.000	4.000
Cardboard liner	1.000	EACH	4.000	4.000
Plastic bag for waste	1.000	EACH	0.250	0.250

Batch Id RTR14-00005 **Container Id** 10042328 **Analysis Id** 0000094425

Waste Items by Volume

Material Item	Quantity	Unit	Unit Wt(lbs)	Item Wt(lbs)
Oil-Dri (Inside 55 gal drum)	12.000	PINTS	0.420	5.040
Liquids for Other Inorganics	0.120	PINTS	1.000	0.120

Waste Parameters

Waste Parameter	Remaining Weight %	Actual Weight Lbs
Iron-based Metals/Alloys	0.000	2.000
Aluminum-based Metals/Alloys	0.000	0.000
Other metals	0.000	0.000
Other Inorganic Materials	0.000	5.160
Cellulosics	0.000	9.000
Rubber	0.000	3.000
Plastic (Waste Materials)	100.000	86.005
Inorganic matrix	0.000	0.000
Organic matrix	0.000	0.000
Soils/gravel	0.000	0.000
Steel (packaging materials)	0.000	142.000
Plastic (packaging materials)	0.000	2.000
Cellulosics Packaging	0.000	0.000

Analysis Esignature History

Esig Approval Id	User Id	Esignature Date	Comment
2679390	DGREEN	24-JAN-2014 14:56	

Batch Id RTR14-00005 **Container Id** 10313178 **Analysis Id** 0000094427

Container Type C drum, 83 Gallon **Analysis Status** Pass

RTR Date 24-JAN-2014 15:16 **Gross Weight** 202.860 Lbs **Net Weight** 59.860 Lbs

Equipment Z-213-101 **Waste Matrix Code** S5490 **IDC** RF-750 Pits 11 & 12 Debris

Recording Id 1RTR14-00007 **Procedure Id** INST-OI-12 **Revision** 52 **Approval Level** SPM

Is Test Pattern Resolution Ok? Yes **Start Side** A **Replicate** No **OIO** No

Audio Visual Ok? Yes **Operator** DGREEN

Result Comment Waste consists of plastic sheeting.

Package

IDC Correct Yes **Recommended IDC** **Summary Category** S5000

Idc Change Reason

Rigid Liner Present? No **LinerType** NO LINER

Liner Punctured? N/A **Sharp Objects?** No

Liner Lid Present? No **Sharp Objects Are Protected?** Yes

Liner Lid Deformed? N/A **Layers Of Confinement** 1

Fill Factor 85

Bag Closure Method Twisted and Taped

Liquids

Liquid Present? No **Internal Container with Liquid** No

Internal Container with Liquid 0 pints **LA Candidate** No

Liquid Between Liner & Drum 0 pints **Containerized Liquid**

Total Liquid Amount 0 pints **Containerized Liquid Amt** 0 pints

Other Liquids 0 pints **Comment**

Prohibited Liquids Present No **Comment**

Contents-Drum or Box

	Value	Comment		Value	Comment
Lead?	No		**Mercury Present?**	No	
Wet Cell Batteries?	No		**Explosives?**	No	
Prohibited Compressed Gases?	Yes	aerosol can without liquid	**PCBs Present?**	No	
Aerosol Cans?	Yes	aerosol can without liquid	**PCB Mass (lbs)**	0	
Non-Mixed Hazardous Waste Present?	No		**Sealed Containers Over 4L?**	No	

Non-Radionuclide Pyrophoric Materials Present? No

Waste exhibiting the characteristics of Ignitability, Corrosivity or Reactivity Present? No

Wastes Incompatible with backfill, seal and panel closure materials, container and packaging materials,shipping container or other wastes? No

Impenetrable Dense Objects? No

Waste Material Items

Packaging Materials

Material Item	Quantity	Unit	Unit Wt(lbs)	Item Wt(lbs)
Drum plastic bag	1.000	EACH	1.000	1.000
55-GAL DRUM (17c)	1.000	EACH	59.000	59.000

Waste Items byWeight

Material Item	Quantity	Unit	Unit Wt(lbs)	Item Wt(lbs)
aerosol can	1.000	EACH	0.500	0.500
metal waste	1.000	EACH	3.000	3.000
paper rags	1.000	EACH	8.000	8.000

Waste Items by Volume

Material Item	Quantity	Unit	Unit Wt(lbs)	Item Wt(lbs)
Oil-Dri (Inside 55 gal drum)	12.000	PINTS	0.420	5.040

Batch Id RTR14-00005 **Container Id** 10313178 **Analysis Id** 0000094427

Waste Parameters

Waste Parameter	Remaining Weight %	Actual Weight Lbs
Iron-based Metals/Alloys	0.000	3.500
Aluminum-based Metals/Alloys	0.000	0.000
Other metals	0.000	0.000
Other Inorganic Materials	0.000	5.040
Cellulosics	0.000	8.000
Rubber	0.000	0.000
Plastic (Waste Materials)	100.000	43.320
Inorganic matrix	0.000	0.000
Organic matrix	0.000	0.000
Soils/gravel	0.000	0.000
Steel (packaging materials)	0.000	142.000
Plastic (packaging materials)	0.000	1.000
Cellulosics Packaging	0.000	0.000

Analysis Esignature History

Esig Approval Id	User Id	Esignature Date	Comment
2679401	DGREEN	24-JAN-2014 15:16	

Batch Id RTR14-00005 **Container Id** 10494031 **Analysis Id** 0000094430

Container Type 7A85 85 Gallon Open Head drum, DOT 7A **Analysis Status** Pass

RTR Date 24-JAN-2014 16:52 **Gross Weight** 337.365 Lbs **Net Weight** 257.365 Lbs

Equipment Z-213-101 **Waste Matrix Code** S5490 **IDC** BN-600 WMF-676 PCB Contaminated Debris

Recording Id 1RTR14-00007 **Procedure Id** INST-OI-12 **Revision** 52 **Approval Level** SPM

Is Test Pattern Resolution Ok? Yes **Start Side** A **Replicate** No **OIO** No

Audio Visual Ok? Yes **Operator** DGREEN

Result Comment Waste consists of metal - AMWTP "silver" drum, sheetmetal, & a transformer winding.

Package

IDC Correct Yes **Recommended IDC** **Summary Category** S5000

Idc Change Reason

Rigid Liner Present? No **LinerType** NO LINER

Liner Punctured? N/A **Sharp Objects?** No

Liner Lid Present? No **Sharp Objects Are Protected?** Yes

Liner Lid Deformed? N/A **Layers Of Confinement** 2

Fill Factor 90

Bag Closure Method Twisted and Taped

Liquids

Liquid Present? No **Internal Container with Liquid** No

Internal Container with Liquid 0 pints **LA Candidate** No

Liquid Between Liner & Drum 0 pints **Containerized Liquid**

Total Liquid Amount 0 pints **Containerized Liquid Amt** 0 pints

Other Liquids 0 pints **Comment**

Prohibited Liquids Present No **Comment**

Contents-Drum or Box

	Value	Comment		Value	Comment
Lead?	No		**Mercury Present?**	No	
Wet Cell Batteries?	No		**Explosives?**	No	
Prohibited Compressed Gases?	No		**PCBs Present?**	Yes - Prohibited	PCB S5000
Aerosol Cans?	No		**PCB Mass (lbs)**	257.37	
Non-Mixed Hazardous Waste Present?	No		**Sealed Containers Over 4L?**	No	

Non-Radionuclide Pyrophoric Materials Present? No

Waste exhibiting the characteristics of Ignitability, Corrosivity or Reactivity Present? No

Wastes Incompatible with backfill, seal and panel closure materials, container and packaging materials,shipping container or other wastes? No

Impenetrable Dense Objects? Yes - Unacceptable item 10-12" x 10-12" appears to be a transformer winding

Waste Material Items

Packaging Materials

Material Item	Quantity	Unit	Unit Wt(lbs)	Item Wt(lbs)

Waste Items byWeight

Material Item	Quantity	Unit	Unit Wt(lbs)	Item Wt(lbs)
wood, cardboard	1.000	EACH	25.000	25.000
drum sling	1.000	EACH	6.000	6.000
Drum Bag	2.000	EACH	1.000	2.000

Waste Items by Volume

Material Item	Quantity	Unit	Unit Wt(lbs)	Item Wt(lbs)

Batch Id RTR14-00005 **Container Id** 10494031 **Analysis Id** 0000094430

Waste Parameters

Waste Parameter	Remaining Weight %	Actual Weight Lbs
Iron-based Metals/Alloys	100.000	227.365
Aluminum-based Metals/Alloys	0.000	0.000
Other metals	0.000	0.000
Other Inorganic Materials	0.000	0.000
Cellulosics	0.000	25.000
Rubber	0.000	1.500
Plastic (Waste Materials)	0.000	3.500
Inorganic matrix	0.000	0.000
Organic matrix	0.000	0.000
Soils/gravel	0.000	0.000
Steel (packaging materials)	0.000	80.000
Plastic (packaging materials)	0.000	0.000
Cellulosics Packaging	0.000	0.000

Analysis Esignature History

Esig Approval Id	User Id	Esignature Date	Comment
2679443	DGREEN	24-JAN-2014 17:21	
2679431	DGREEN	24-JAN-2014 16:52	

Batch Id RTR14-00005 **Container Id** 10494030 **Analysis Id** 0000094438

Container Type 7A85 85 Gallon Open Head drum, DOT 7A **Analysis Status** Pass

RTR Date 24-JAN-2014 17:51 **Gross Weight** 295.470 Lbs **Net Weight** 215.470 Lbs

Equipment Z-213-101 **Waste Matrix Code** S5490 **IDC** BN-600 WMF-676 PCB Contaminated Debris

Recording Id 1RTR14-00007 **Procedure Id** INST-OI-12 **Revision** 52 **Approval Level** SPM

Is Test Pattern Resolution Ok? Yes **Start Side** A **Replicate** No **OIO** No

Audio Visual Ok? Yes **Operator** DGREEN

Result Comment Waste consists of metal - AMWTP "silver" drum, piping, angle iron, sheetmetal, wire, conduit, misc. small electrical items.

Package

IDC Correct Yes **Recommended IDC** **Summary Category** S5000

Idc Change Reason

Rigid Liner Present? No **LinerType** NO LINER

Liner Punctured? N/A **Sharp Objects?** Yes

Liner Lid Present? No **Sharp Objects Are Protected?** No

Liner Lid Deformed? N/A **Layers Of Confinement** 2

Fill Factor 90

Bag Closure Method Twisted and Taped

Liquids

Liquid Present? No **Internal Container with Liquid** No

Internal Container with Liquid 0 pints **LA Candidate** No

Liquid Between Liner & Drum 0 pints **Containerized Liquid**

Total Liquid Amount 0 pints **Containerized Liquid Amt** 0 pints

Other Liquids 0 pints **Comment**

Prohibited Liquids Present No **Comment**

Contents-Drum or Box

	Value	Comment		Value	Comment
Lead?	No		**Mercury Present?**	No	
Wet Cell Batteries?	No		**Explosives?**	No	
Prohibited Compressed Gases?	No		**PCBs Present?**	Yes - Prohibited	PCB IDC - S5000
Aerosol Cans?	No		**PCB Mass (lbs)**	215.47	
Non-Mixed Hazardous Waste Present?	No		**Sealed Containers Over 4L?**	No	

Non-Radionuclide Pyrophoric Materials Present? No

Waste exhibiting the characteristics of Ignitability, Corrosivity or Reactivity Present? No

Wastes Incompatible with backfill, seal and panel closure materials, container and packaging materials,shipping container or other wastes? No

Impenetrable Dense Objects? No

Waste Material Items

Packaging Materials

Material Item	Quantity	Unit	Unit Wt(lbs)	Item Wt(lbs)

Waste Items byWeight

Material Item	Quantity	Unit	Unit Wt(lbs)	Item Wt(lbs)
drum sling	1.000	EACH	6.000	6.000
wood, paper, rags	1.000	EACH	15.000	15.000
Drum Bag	2.000	EACH	1.000	2.000

Waste Items by Volume

Material Item	Quantity	Unit	Unit Wt(lbs)	Item Wt(lbs)
Oil-Dri (Inside 55 gal drum)	10.000	PINTS	0.420	4.200

Batch Id RTR14-00005 **Container Id** 10494030 **Analysis Id** 0000094438

Waste Parameters

Waste Parameter	Remaining Weight %	Actual Weight Lbs
Iron-based Metals/Alloys	100.000	191.270
Aluminum-based Metals/Alloys	0.000	0.000
Other metals	0.000	0.000
Other Inorganic Materials	0.000	4.200
Cellulosics	0.000	15.000
Rubber	0.000	1.500
Plastic (Waste Materials)	0.000	3.500
Inorganic matrix	0.000	0.000
Organic matrix	0.000	0.000
Soils/gravel	0.000	0.000
Steel (packaging materials)	0.000	80.000
Plastic (packaging materials)	0.000	0.000
Cellulosics Packaging	0.000	0.000

Analysis Esignature History

Esig Approval Id	User Id	Esignature Date	Comment
2679453	DGREEN	24-JAN-2014 17:51	

Batch Id RTR14-00005 **Container Id** 10323541 **Analysis Id** 0000094439

Container Type C drum, 83 Gallon **Analysis Status** Pass

RTR Date 24-JAN-2014 18:06 **Gross Weight** 171.990 Lbs **Net Weight** 27.990 Lbs

Equipment Z-213-101 **Waste Matrix Code** S5490 **IDC** RF-750 Pits 11 & 12 Debris

Recording Id 1RTR14-00007 **Procedure Id** INST-OI-12 **Revision** 52 **Approval Level** SPM

Is Test Pattern Resolution Ok? Yes **Start Side** A **Replicate** No **OIO** No

Audio Visual Ok? Yes **Operator** DGREEN

Result Comment Waste consists of paper, rags, & coveralls.
AK does not concur with the recommended IDC of UN-00B for container 10323541 because waste is debris retrieved from Pits 11 and 12. Instead, AK recommends an IDC of RF-750. CHD 01/28/14
Rework to change IDC per AK. ESO 01/30/14
AK concurs with the recommended IDC, RF-750, for container 10323541. No AKR or NCR is necessary. CHD 01/30/14

Package

IDC Correct Yes **Recommended IDC** RF-750 **Summary Category** S5000

Idc Change Reason Per AK

Rigid Liner Present? No **LinerType** NO LINER

Liner Punctured? N/A **Sharp Objects?** No

Liner Lid Present? No **Sharp Objects Are Protected?** Yes

Liner Lid Deformed? N/A **Layers Of Confinement** 3

Fill Factor 85

Bag Closure Method Twisted and Taped

Liquids

Liquid Present? No **Internal Container with Liquid** No

Internal Container with Liquid 0 pints **LA Candidate** No

Liquid Between Liner & Drum 0 pints **Containerized Liquid**

Total Liquid Amount 0 pints **Containerized Liquid Amt** 0 pints

Other Liquids 0 pints **Comment**

Prohibited Liquids Present No **Comment**

Contents-Drum or Box

	Value	Comment		Value	Comment
Lead?	No		**Mercury Present?**	No	
Wet Cell Batteries?	No		**Explosives?**	No	
Prohibited Compressed Gases?	No		**PCBs Present?**	No	
Aerosol Cans?	No		**PCB Mass (lbs)**	0	
Non-Mixed Hazardous Waste Present?	No		**Sealed Containers Over 4L?**	No	

Non-Radionuclide Pyrophoric Materials Present? No

Waste exhibiting the characteristics of Ignitability, Corrosivity or Reactivity Present? No

Wastes Incompatible with backfill, seal and panel closure materials, container and packaging materials,shipping container or other wastes? No

Impenetrable Dense Objects? No

Waste Material Items

Packaging Materials

Material Item	Quantity	Unit	Unit Wt(lbs)	Item Wt(lbs)
Drum plastic bag	2.000	EACH	1.000	2.000
55-GAL DRUM (17c)	1.000	EACH	59.000	59.000

Waste Items byWeight

Material Item	Quantity	Unit	Unit Wt(lbs)	Item Wt(lbs)
plastic waste	1.000	EACH	3.000	3.000
metal waste	1.000	EACH	7.000	7.000
Plastic bag for waste	1.000	EACH	0.250	0.250

Batch Id RTR14-00005 **Container Id** 10323541 **Analysis Id** 0000094439

Waste Items by Volume

Material Item	Quantity	Unit	Unit Wt(lbs)	Item Wt(lbs)
Oil-Dri (Inside 55 gal drum)	0.500	PINTS	0.420	0.210

Waste Parameters

Waste Parameter	Remaining Weight %	Actual Weight Lbs
Iron-based Metals/Alloys	0.000	7.000
Aluminum-based Metals/Alloys	0.000	0.000
Other metals	0.000	0.000
Other Inorganic Materials	0.000	0.210
Cellulosics	100.000	17.530
Rubber	0.000	0.000
Plastic (Waste Materials)	0.000	3.250
Inorganic matrix	0.000	0.000
Organic matrix	0.000	0.000
Soils/gravel	0.000	0.000
Steel (packaging materials)	0.000	142.000
Plastic (packaging materials)	0.000	2.000
Cellulosics Packaging	0.000	0.000

Analysis Esignature History

Esig Approval Id	User Id	Esignature Date	Comment
2684841	CHINKLE	30-JAN-2014 10:33	Batch is promoted. chd 1/30/14
2684471	SOLDHAM	30-JAN-2014 08:14	
2680790	CHINKLE	28-JAN-2014 08:24	This batch is returned for rework. AK does not concur with the recommended IDC change for containers10456533, 10453439, 10368557, 10366291, 10323541 and 10145322. CHD 01/28/14
2679457	DGREEN	24-JAN-2014 18:06	

Batch Id RTR14-00005 **Container Id** 10182410 **Analysis Id** 0000094441

Container Type C drum, 83 Gallon **Analysis Status** Pass

RTR Date 25-JAN-2014 11:46 **Gross Weight** 756.315 Lbs **Net Weight** 596.315 Lbs

Equipment Z-213-101 **Waste Matrix Code** S3121 **IDC** RF-007 Building 374 Dry Sludge

Recording Id 1RTR14-00007 **Procedure Id** INST-OI-12 **Revision** 52 **Approval Level** SPM

Is Test Pattern Resolution Ok? Yes **Start Side** A **Replicate** No **OIO** No

Audio Visual Ok? Yes **Operator** MRICKS

Result Comment Overpacked 55 gal drum appears to contain sludge.

Package

IDC Correct Yes **Recommended IDC** **Summary Category** S3000

Idc Change Reason

Rigid Liner Present? Yes **LinerType** TYPE 3

Liner Punctured? Yes **Sharp Objects?** No

Liner Lid Present? Yes **Sharp Objects Are Protected?** Yes

Liner Lid Deformed? No **Layers Of Confinement** 2

Fill Factor 97

Bag Closure Method Twisted and Taped

Liquids

Liquid Present? Yes **Internal Container with Liquid** No

Internal Container with Liquid 0 pints **LA Candidate** No

Liquid Between Liner & Drum 0 pints **Containerized Liquid**

Total Liquid Amount 1.1 pints **Containerized Liquid Amt** 0 pints

Other Liquids 1.1 pints **Comment** estimate 1.1 pints in the waste bottom of drum

Prohibited Liquids Present No **Comment**

Contents-Drum or Box

	Value	Comment		Value	Comment
Lead?	No		**Mercury Present?**	No	
Wet Cell Batteries?	No		**Explosives?**	No	
Prohibited Compressed Gases?	No		**PCBs Present?**	No	
Aerosol Cans?	No		**PCB Mass (lbs)**	0	
Non-Mixed Hazardous Waste Present?	No		**Sealed Containers Over 4L?**	No	

Non-Radionuclide Pyrophoric Materials Present? No

Waste exhibiting the characteristics of Ignitability, Corrosivity or Reactivity Present? No

Wastes Incompatible with backfill, seal and panel closure materials, container and packaging materials,shipping container or other wastes? No

Impenetrable Dense Objects? No

Waste Material Items

Packaging Materials

Material Item	Quantity	Unit	Unit Wt(lbs)	Item Wt(lbs)
90 mil liner	1.000	EACH	16.000	16.000
Drum plastic bag	2.000	EACH	1.000	2.000
55-GAL DRUM (17c)	1.000	EACH	59.000	59.000

Waste Items byWeight

Material Item	Quantity	Unit	Unit Wt(lbs)	Item Wt(lbs)

Waste Items bv Volume

Material Item	Quantity	Unit	Unit Wt(lbs)	Item Wt(lbs)
Liquids for Inorganic Matrix	1.100	PINTS	1.000	1.100

Batch Id RTR14-00005 **Container Id** 10182410 **Analysis Id** 0000094441

Waste Parameters

Waste Parameter	Remaining Weight %	Actual Weight Lbs
Iron-based Metals/Alloys	0.000	0.000
Aluminum-based Metals/Alloys	0.000	0.000
Other metals	0.000	0.000
Other Inorganic Materials	0.000	0.000
Cellulosics	0.000	0.000
Rubber	0.000	0.000
Plastic (Waste Materials)	0.000	0.000
Inorganic matrix	100.000	596.315
Organic matrix	0.000	0.000
Soils/gravel	0.000	0.000
Steel (packaging materials)	0.000	142.000
Plastic (packaging materials)	0.000	18.000
Cellulosics Packaging	0.000	0.000

Analysis Esignature History

Esig Approval Id	User Id	Esignature Date	Comment
2679572	MRICKS	25-JAN-2014 11:46	

Batch Id RTR14-00005 **Container Id** 10220519 **Analysis Id** 0000094444

Container Type C drum, 83 Gallon **Analysis Status** Pass

RTR Date 25-JAN-2014 12:02 **Gross Weight** 399.105 Lbs **Net Weight** 239.105 Lbs

Equipment Z-213-101 **Waste Matrix Code** S5122 **IDC** RF-440 Glass

Recording Id 1RTR14-00007 **Procedure Id** INST-OI-12 **Revision** 52 **Approval Level** SPM

Is Test Pattern Resolution Ok? Yes **Start Side** A **Replicate** No **OIO** No

Audio Visual Ok? Yes **Operator** MRICKS

Result Comment Overpacked 55 gal drum contains raschig rings in fiberpaks.

Package

IDC Correct Yes **Recommended IDC** **Summary Category** S5000

Idc Change Reason

Rigid Liner Present? Yes **LinerType** TYPE 1

Liner Punctured? No **Sharp Objects?** No

Liner Lid Present? Yes **Sharp Objects Are Protected?** Yes

Liner Lid Deformed? Yes **Layers Of Confinement** 4

Fill Factor 80

Bag Closure Method Twisted and Taped

Liquids

Liquid Present? No **Internal Container with Liquid** No

Internal Container with Liquid 0 pints **LA Candidate** No

Liquid Between Liner & Drum 0 pints **Containerized Liquid**

Total Liquid Amount 0 pints **Containerized Liquid Amt** 0 pints

Other Liquids 0 pints **Comment**

Prohibited Liquids Present No **Comment**

Contents-Drum or Box

	Value	Comment		Value	Comment
Lead?	No		**Mercury Present?**	No	
Wet Cell Batteries?	No		**Explosives?**	No	
Prohibited Compressed Gases?	No		**PCBs Present?**	No	
Aerosol Cans?	No		**PCB Mass (lbs)**	0	
Non-Mixed Hazardous Waste Present?	No		**Sealed Containers Over 4L?**	No	

Non-Radionuclide Pyrophoric Materials Present? No

Waste exhibiting the characteristics of Ignitability, Corrosivity or Reactivity Present? No

Wastes Incompatible with backfill, seal and panel closure materials, container and packaging materials,shipping container or other wastes? No

Impenetrable Dense Objects? No

Waste Material Items

Packaging Materials

Material Item	Quantity	Unit	Unit Wt(lbs)	Item Wt(lbs)
90 mil liner	1.000	EACH	16.000	16.000
Drum plastic bag	2.000	EACH	1.000	2.000
55-GAL DRUM (17c)	1.000	EACH	59.000	59.000

Waste Items byWeight

Material Item	Quantity	Unit	Unit Wt(lbs)	Item Wt(lbs)
Fiber pack	2.000	EACH	6.000	12.000
Plastic bag for waste	4.000	EACH	0.250	1.000

Waste Items by Volume

Material Item	Quantity	Unit	Unit Wt(lbs)	Item Wt(lbs)
Oil-Dri (Inside 55 gal drum)	100.000	PINTS	0.420	42.000

Batch Id RTR14-00005 **Container Id** 10220519 **Analysis Id** 0000094444

Waste Parameters

Waste Parameter	Remaining Weight %	Actual Weight Lbs
Iron-based Metals/Alloys	0.000	0.000
Aluminum-based Metals/Alloys	0.000	0.000
Other metals	0.000	0.000
Other Inorganic Materials	100.000	226.105
Cellulosics	0.000	12.000
Rubber	0.000	0.000
Plastic (Waste Materials)	0.000	1.000
Inorganic matrix	0.000	0.000
Organic matrix	0.000	0.000
Soils/gravel	0.000	0.000
Steel (packaging materials)	0.000	142.000
Plastic (packaging materials)	0.000	18.000
Cellulosics Packaging	0.000	0.000

Analysis Esignature History

Esig Approval Id	User Id	Esignature Date	Comment
2679574	MRICKS	25-JAN-2014 12:02	

Batch Id RTR14-00005 **Container Id** 10034756 **Analysis Id** 0000094446

Container Type C drum, 83 Gallon **Analysis Status** Pass

RTR Date 25-JAN-2014 12:22 **Gross Weight** 566.685 Lbs **Net Weight** 406.685 Lbs

Equipment Z-213-101 **Waste Matrix Code** S3121 **IDC** RF-807 Bldg 374 Bypass Sludge (After 3/21/87)

Recording Id 1RTR14-00007 **Procedure Id** INST-OI-12 **Revision** 52 **Approval Level** SPM

Is Test Pattern Resolution Ok? Yes **Start Side** A **Replicate** No **OIO** No

Audio Visual Ok? Yes **Operator** MRICKS

Result Comment Overpacked 55 gal drum appears to contain sludge.

Package

IDC Correct Yes **Recommended IDC** **Summary Category** S3000

Idc Change Reason

Rigid Liner Present? Yes **LinerType** TYPE 3

Liner Punctured? Yes **Sharp Objects?** No

Liner Lid Present? No **Sharp Objects Are Protected?** Yes

Liner Lid Deformed? N/A **Layers Of Confinement** 2

Fill Factor 75

Bag Closure Method Twisted and Taped

Liquids

Liquid Present? No **Internal Container with Liquid** No

Internal Container with Liquid 0 pints **LA Candidate** No

Liquid Between Liner & Drum 0 pints **Containerized Liquid**

Total Liquid Amount 0 pints **Containerized Liquid Amt** 0 pints

Other Liquids 0 pints **Comment**

Prohibited Liquids Present No **Comment**

Contents-Drum or Box

	Value	Comment		Value	Comment
Lead?	No		**Mercury Present?**	No	
Wet Cell Batteries?	No		**Explosives?**	No	
Prohibited Compressed Gases?	No		**PCBs Present?**	No	
Aerosol Cans?	No		**PCB Mass (lbs)**	0	
Non-Mixed Hazardous Waste Present?	No		**Sealed Containers Over 4L?**	No	

Non-Radionuclide Pyrophoric Materials Present? No

Waste exhibiting the characteristics of Ignitability, Corrosivity or Reactivity Present? No

Wastes Incompatible with backfill, seal and panel closure materials, container and packaging materials,shipping container or other wastes? No

Impenetrable Dense Objects? No

Waste Material Items

Packaging Materials

Material Item	Quantity	Unit	Unit Wt(lbs)	Item Wt(lbs)
90 mil liner	1.000	EACH	16.000	16.000
Drum plastic bag	2.000	EACH	1.000	2.000
55-GAL DRUM (17c)	1.000	EACH	59.000	59.000

Waste Items byWeight

Material Item	Quantity	Unit	Unit Wt(lbs)	Item Wt(lbs)

Waste Items by Volume

Material Item	Quantity	Unit	Unit Wt(lbs)	Item Wt(lbs)

Batch Id RTR14-00005 **Container Id** 10034756 **Analysis Id** 0000094446

Waste Parameters

Waste Parameter	Remaining Weight %	Actual Weight Lbs
Iron-based Metals/Alloys	0.000	0.000
Aluminum-based Metals/Alloys	0.000	0.000
Other metals	.0.000	0.000
Other Inorganic Materials	0.000	0.000
Cellulosics	0.000	0.000
Rubber	0.000	0.000
Plastic (Waste Materials)	0.000	0.000
Inorganic matrix	100.000	406.685
Organic matrix	0.000	0.000
Soils/gravel	0.000	0.000
Steel (packaging materials)	0.000	142.000
Plastic (packaging materials)	0.000	18.000
Cellulosics Packaging	0.000	0.000

Analysis Esignature History

Esig Approval Id	User Id	Esignature Date	Comment
2679577	MRICKS	25-JAN-2014 12:22	

Batch Id RTR14-00005 **Container Id** 10220519 **Analysis Id** 0000094448

Container Type C drum, 83 Gallon **Analysis Status** Pass

RTR Date 25-JAN-2014 13:23 **Gross Weight** 399.105 Lbs **Net Weight** 239.105 Lbs

Equipment Z-213-101 **Waste Matrix Code** S5122 **IDC** RF-440 Glass

Recording Id 1RTR14-00007 **Procedure Id** INST-OI-12 **Revision** 52 **Approval Level** SPM

Is Test Pattern Resolution Ok? Yes **Start Side** A **Replicate** No **OIO** Yes

Audio Visual Ok? Yes **Operator** JCUMMINGS

Result Comment Contents of this drum is primarily raschig rings.

Package

IDC Correct Yes **Recommended IDC** **Summary Category** S5000

Idc Change Reason

Rigid Liner Present? Yes **LinerType** TYPE 1

Liner Punctured? No **Sharp Objects?** No

Liner Lid Present? Yes **Sharp Objects Are Protected?** Yes

Liner Lid Deformed? No **Layers Of Confinement** 4

Fill Factor 65

Bag Closure Method Twisted and Taped

Liquids

Liquid Present? No **Internal Container with Liquid** No

Internal Container with Liquid 0 pints **LA Candidate** No

Liquid Between Liner & Drum 0 pints **Containerized Liquid**

Total Liquid Amount 0 pints **Containerized Liquid Amt** 0 pints

Other Liquids 0 pints **Comment**

Prohibited Liquids Present No **Comment**

Contents-Drum or Box

	Value	Comment		Value	Comment
Lead?	No		**Mercury Present?**	No	
Wet Cell Batteries?	No		**Explosives?**	No	
Prohibited Compressed Gases?	No		**PCBs Present?**	No	
Aerosol Cans?	No		**PCB Mass (lbs)**	0	
Non-Mixed Hazardous Waste Present?	No		**Sealed Containers Over 4L?**	No	

Non-Radionuclide Pyrophoric Materials Present? No

Waste exhibiting the characteristics of Ignitability, Corrosivity or Reactivity Present? No

Wastes Incompatible with backfill, seal and panel closure materials, container and packaging materials,shipping container or other wastes? No

Impenetrable Dense Objects? No

Waste Material Items

Packaging Materials

Material Item	Quantity	Unit	Unit Wt(lbs)	Item Wt(lbs)
90 mil liner	1.000	EACH	16.000	16.000
Drum plastic bag	2.000	EACH	1.000	2.000
55-GAL DRUM (17c)	1.000	EACH	59.000	59.000

Waste Items byWeight

Material Item	Quantity	Unit	Unit Wt(lbs)	Item Wt(lbs)
Fiber pack	2.000	EACH	6.000	12.000
Plastic bag for waste	4.000	EACH	0.250	1.000

Waste Items by Volume

Material Item	Quantity	Unit	Unit Wt(lbs)	Item Wt(lbs)
Oil-Dri (Inside 55 gal drum)	80.000	PINTS	0.420	33.600

Batch Id RTR14-00005 **Container Id** 10220519 **Analysis Id** 0000094448

Waste Parameters

Waste Parameter	Remaining Weight %	Actual Weight Lbs
Iron-based Metals/Alloys	0.000	0.000
Aluminum-based Metals/Alloys	0.000	0.000
Other metals	0.000	0.000
Other Inorganic Materials	100.000	226.105
Cellulosics	0.000	12.000
Rubber	0.000	0.000
Plastic (Waste Materials)	0.000	1.000
Inorganic matrix	0.000	0.000
Organic matrix	0.000	0.000
Soils/gravel	0.000	0.000
Steel (packaging materials)	0.000	142.000
Plastic (packaging materials)	0.000	18.000
Cellulosics Packaging	0.000	0.000

RTR Independent Observation

Obsolete	Performed	User Name	Checklist	Answer
No	01-FEB-2014 15:18	RBTHOMPSON	1.Was an independent observation performed?	Yes
			2.Were all items on the recording media identified correctly in WTS?	Yes
			3.Do you agree with the operator?	No

Comment

Independent Observation Esignature History

Esig Approval Id	User Id	Esignature Date	Comment
2685868	RBTHOMPSON	01-FEB-2014 15:18	OIO

Analysis Esignature History

Esig Approval Id	User Id	Esignature Date	Comment
2679581	JCUMMINGS	25-JAN-2014 13:23	

Batch Id RTR14-00005 **Container Id** 10034756 **Analysis Id** 0000094450

Container Type C drum, 83 Gallon **Analysis Status** Pass

RTR Date 25-JAN-2014 13:47 **Gross Weight** 566.685 Lbs **Net Weight** 403.685 Lbs

Equipment Z-213-101 **Waste Matrix Code** S3121 **IDC** RF-807 Bldg 374 Bypass Sludge (After 3/21/87)

Recording Id 1RTR14-00007 **Procedure Id** INST-OI-12 **Revision** 52 **Approval Level** SPM

Is Test Pattern Resolution Ok? Yes **Start Side** A **Replicate** Yes **OIO** No

Audio Visual Ok? Yes **Operator** JCUMMINGS

Result Comment Contents of this drum is primarily sludge.

Package

IDC Correct Yes **Recommended IDC** **Summary Category** S3000

Idc Change Reason

Rigid Liner Present? Yes **LinerType** TYPE 3

Liner Punctured? Yes **Sharp Objects?** No

Liner Lid Present? Yes **Sharp Objects Are Protected?** Yes

Liner Lid Deformed? No **Layers Of Confinement** 2

Fill Factor 75

Bag Closure Method Twisted and Taped

Liquids

Liquid Present? No **Internal Container with Liquid** No

Internal Container with Liquid 0 pints **LA Candidate** No

Liquid Between Liner & Drum 0 pints **Containerized Liquid**

Total Liquid Amount 0 pints **Containerized Liquid Amt** 0 pints

Other Liquids 0 pints **Comment**

Prohibited Liquids Present No **Comment**

Contents-Drum or Box

	Value	Comment		Value	Comment
Lead?	No		Mercury Present?	No	
Wet Cell Batteries?	No		Explosives?	No	
Prohibited Compressed Gases?	No		PCBs Present?	No	
Aerosol Cans?	No		PCB Mass (lbs)	0	
Non-Mixed Hazardous Waste Present?	No		Sealed Containers Over 4L?	No	

Non-Radionuclide Pyrophoric Materials Present? No

Waste exhibiting the characteristics of Ignitability, Corrosivity or Reactivity Present? No

Wastes Incompatible with backfill, seal and panel closure materials, container and packaging materials,shipping container or other wastes? No

Impenetrable Dense Objects? No

Waste Material Items

Packaging Materials

Material Item	Quantity	Unit	Unit Wt(lbs)	Item Wt(lbs)
90 mil liner	1.000	EACH	16.000	16.000
Drum plastic bag	1.000	EACH	1.000	1.000
O-ring plastic bag	1.000	EACH	4.000	4.000
55-GAL DRUM (17c)	1.000	EACH	59.000	59.000

Waste Items byWeight

Material Item	Quantity	Unit	Unit Wt(lbs)	Item Wt(lbs)

Waste Items by Volume

Material Item	Quantity	Unit	Unit Wt(lbs)	Item Wt(lbs)

Batch Id RTR14-00005 **Container Id** 10034756 **Analysis Id** 0000094450

Waste Parameters

Waste Parameter	Remaining Weight %	Actual Weight Lbs
Iron-based Metals/Alloys	0.000	0.000
Aluminum-based Metals/Alloys	0.000	0.000
Other metals	0.000	0.000
Other Inorganic Materials	0.000	0.000
Cellulosics	0.000	0.000
Rubber	0.000	0.000
Plastic (Waste Materials)	0.000	0.000
Inorganic matrix	100.000	403.685
Organic matrix	0.000	0.000
Soils/gravel	0.000	0.000
Steel (packaging materials)	0.000	142.000
Plastic (packaging materials)	0.000	21.000
Cellulosics Packaging	0.000	0.000

Analysis Esignature History

Esig Approval Id	User Id	Esignature Date	Comment
2679583	JCUMMINGS	25-JAN-2014 13:47	

Batch Id RTR14-00005 **Container Id** 10336333 **Analysis Id** 0000094451

Container Type C drum, 83 Gallon **Analysis Status** Pass

RTR Date 25-JAN-2014 14:18 **Gross Weight** 518.175 Lbs **Net Weight** 375.175 Lbs

Equipment Z-213-101 **Waste Matrix Code** S3114 **IDC** RF-743 Pits 11 & 12 Organic Setups

Recording Id 1RTR14-00007 **Procedure Id** INST-OI-12 **Revision** 52 **Approval Level** SPM

Is Test Pattern Resolution Ok? Yes **Start Side** A **Replicate** No **OIO** No

Audio Visual Ok? Yes **Operator** JCUMMINGS

Result Comment Contents of this drum is primarily sludge.

Package

IDC Correct Yes **Recommended IDC** **Summary Category** S3000

Idc Change Reason

Rigid Liner Present? No **LinerType** NO LINER

Liner Punctured? N/A **Sharp Objects?** No

Liner Lid Present? No **Sharp Objects Are Protected?** Yes

Liner Lid Deformed? N/A **Layers Of Confinement** 1

Fill Factor 90

Bag Closure Method Twisted and Taped

Liquids

Liquid Present? Yes **Internal Container with Liquid** No

Internal Container with Liquid 0 pints **LA Candidate** No

Liquid Between Liner & Drum 0 pints **Containerized Liquid**

Total Liquid Amount 20.25 pints **Containerized Liquid Amt** 0 pints

Other Liquids 20.25 pin **Comment** .25 pints in bagging at the bottom of the drum. 20 pints in bagging.

Prohibited Liquids Present Yes **Comment** > 1% by volume

Contents-Drum or Box

	Value	Comment		Value	Comment
Lead?	No		**Mercury Present?**	No	
Wet Cell Batteries?	No		**Explosives?**	No	
Prohibited Compressed Gases?	No		**PCBs Present?**	Yes - Prohibited	PCB liquid
Aerosol Cans?	No		**PCB Mass (lbs)**	375.18	
Non-Mixed Hazardous Waste Present?	No		**Sealed Containers Over 4L?**	No	

Non-Radionuclide Pyrophoric Materials Present? No

Waste exhibiting the characteristics of Ignitability, Corrosivity or Reactivity Present? No

Wastes Incompatible with backfill, seal and panel closure materials, container and packaging materials,shipping container or other wastes? No

Impenetrable Dense Objects? No

Waste Material Items

Packaging Materials

Material Item	Quantity	Unit	Unit Wt(lbs)	Item Wt(lbs)
Drum plastic bag	1.000	EACH	1.000	1.000
55-GAL DRUM (17c)	1.000	EACH	59.000	59.000

Waste Items byWeight

Material Item	Quantity	Unit	Unit Wt(lbs)	Item Wt(lbs)

Waste Items by Volume

Material Item	Quantity	Unit	Unit Wt(lbs)	Item Wt(lbs)
Liquids for Organic Matrix	20.250	PINTS	1.000	20.250

Batch Id RTR14-00005 **Container Id** 10336333 **Analysis Id** 0000094451

Waste Parameters

Waste Parameter	Remaining Weight %	Actual Weight Lbs
Iron-based Metals/Alloys	0.000	0.000
Aluminum-based Metals/Alloys	0.000	0.000
Other metals	0.000	0.000
Other Inorganic Materials	0.000	0.000
Cellulosics	0.000	0.000
Rubber	0.000	0.000
Plastic (Waste Materials)	0.000	0.000
Inorganic matrix	0.000	0.000
Organic matrix	100.000	375.175
Soils/gravel	0.000	0.000
Steel (packaging materials)	0.000	142.000
Plastic (packaging materials)	0.000	1.000
Cellulosics Packaging	0.000	0.000

Analysis Esignature History

Esig Approval Id	User Id	Esignature Date	Comment
2679586	JCUMMINGS	25-JAN-2014 14:18	

Batch Id RTR14-00005 **Container Id** 10368557 **Analysis Id** 0000094453

Container Type A drum, 55 Gallon Drum (17H) **Analysis Status** Pass

RTR Date 25-JAN-2014 15:10 **Gross Weight** 123.480 **Lbs** **Net Weight** 63.480 **Lbs**

Equipment Z-213-101 **Waste Matrix Code** S5490 **IDC** BN-524 Pad 1 Cells 1 and 2 Non-PCB Debris

Recording Id 1RTR14-00007 **Procedure Id** INST-OI-12 **Revision** 52 **Approval Level** SPM

Is Test Pattern Resolution Ok? Yes **Start Side** A **Replicate** No **OIO** No

Audio Visual Ok? Yes **Operator** JCUMMINGS

Result Comment Contents of this drum is primarily plastic labware as bottles, tubing and bagging.
AK does not concur with the recommended IDC change from UN-000 to UN-00B for container 10368557 because waste is debris with insufficient AK information to assign a legacy IDC. Instead, AK recommends an IDC of BN-524. CHD 01/28/14
Rework to change IDC per AK. ESO 01/30/14
AK concurs with the recommended IDC, BN-524, for container 10368557. No AKR or NCR is necessary. CHD 01/30/14
(rework) Updated liquid comment field. KH 03FEB14

Package

IDC Correct Yes **Recommended IDC** BN-524 **Summary Category** S5000

Idc Change Reason Per AK

Rigid Liner Present? No **LinerType** NO LINER

Liner Punctured? N/A **Sharp Objects?** No

Liner Lid Present? No **Sharp Objects Are Protected?** Yes

Liner Lid Deformed? N/A **Layers Of Confinement** 2

Fill Factor 80

Bag Closure Method Twisted and Taped

Liquids

Liquid Present? Yes **Internal Container with Liquid** No

Internal Container with Liquid 0 pints **LA Candidate** No

Liquid Between Liner & Drum 0 pints **Containerized Liquid**

Total Liquid Amount .28 pints **Containerized Liquid Amt** 0 pints

Other Liquids .28 pints **Comment** .28 pints in the bagging throughout the waste

Prohibited Liquids Present No **Comment**

Contents-Drum or Box

	Value	Comment		Value	Comment
Lead?	No		Mercury Present?	No	
Wet Cell Batteries?	No		Explosives?	No	
Prohibited Compressed Gases?	No		PCBs Present?	No	
Aerosol Cans?	No		PCB Mass (lbs)	0	
Non-Mixed Hazardous Waste Present?	No		Sealed Containers Over 4L?	No	

Non-Radionuclide Pyrophoric Materials Present? No

Waste exhibiting the characteristics of Ignitability, Corrosivity or Reactivity Present? No

Wastes Incompatible with backfill, seal and panel closure materials, container and packaging materials,shipping container or other wastes? No

Impenetrable Dense Objects? No

Waste Material Items

Packaging Materials

Material Item	Quantity	Unit	Unit Wt(lbs)	Item Wt(lbs)
Drum plastic bag	1.000	EACH	1.000	1.000

Waste Items byWeight

Material Item	Quantity	Unit	Unit Wt(lbs)	Item Wt(lbs)
misc. metal	1.000	EACH	2.000	2.000
Plastic bag for waste	1.000	EACH	0.250	0.250

Batch Id RTR14-00005 **Container Id** 10368557 **Analysis Id** 0000094453

Waste Items by Volume

Material Item	Quantity	Unit	Unit Wt(lbs)	Item Wt(lbs)
Oil-Dri (Inside 55 gal drum)	8.000	PINTS	0.420	3.360
Liquids for Other Inorganics	0.280	PINTS	1.000	0.280

Waste Parameters

Waste Parameter	Remaining Weight %	Actual Weight Lbs
Iron-based Metals/Alloys	0.000	2.000
Aluminum-based Metals/Alloys	0.000	0.000
Other metals	0.000	0.000
Other Inorganic Materials	0.000	3.640
Cellulosics	0.000	0.000
Rubber	0.000	0.000
Plastic (Waste Materials)	100.000	57.840
Inorganic matrix	0.000	0.000
Organic matrix	0.000	0.000
Soils/gravel	0.000	0.000
Steel (packaging materials)	0.000	59.000
Plastic (packaging materials)	0.000	1.000
Cellulosics Packaging	0.000	0.000

Analysis Esignature History

Esig Approval Id	User Id	Esignature Date	Comment
2686082	KHUGHES	03-FEB-2014 07:19	
2684839	CHINKLE	30-JAN-2014 10:33	Batch is promoted. chd 1/30/14
2684475	SOLDHAM	30-JAN-2014 08:17	
2680788	CHINKLE	28-JAN-2014 08:24	This batch is returned for rework. AK does not concur with the recommended IDC change for containers10456533, 10453439, 10368557, 10366291, 10323541 and 10145322. CHD 01/28/14
2679602	JCUMMINGS	25-JAN-2014 15:10	

Batch Id RTR14-00005 **Container Id** 10054382 **Analysis Id** 0000094455

Container Type A drum, 55 Gallon Drum (17H) **Analysis Status** Pass

RTR Date 25-JAN-2014 15:26 **Gross Weight** 196.245 Lbs **Net Weight** 120.245 Lbs

Equipment Z-213-101 **Waste Matrix Code** S3111 **IDC** RF-421 Ash Heels

Recording Id 1RTR14-00007 **Procedure Id** INST-OI-12 **Revision** 52 **Approval Level** SPM

Is Test Pattern Resolution Ok? Yes **Start Side** A **Replicate** No **OIO** No

Audio Visual Ok? Yes **Operator** JCUMMINGS

Result Comment Contents of this drum is primarily ash heels in poly bottles.

Package

IDC Correct Yes **Recommended IDC** **Summary Category** S3000

Idc Change Reason

Rigid Liner Present? Yes **LinerType** TYPE I

Liner Punctured? Yes **Sharp Objects?** No

Liner Lid Present? Yes **Sharp Objects Are Protected?** Yes

Liner Lid Deformed? No **Layers Of Confinement** 2

Fill Factor 65

Bag Closure Method Twisted and Taped

Liquids

Liquid Present? No **Internal Container with Liquid** No

Internal Container with Liquid 0 pints **LA Candidate** No

Liquid Between Liner & Drum 0 pints **Containerized Liquid**

Total Liquid Amount 0 pints **Containerized Liquid Amt** 0 pints

Other Liquids 0 pints **Comment**

Prohibited Liquids Present No **Comment**

Contents-Drum or Box

	Value	Comment		Value	Comment
Lead?	No		**Mercury Present?**	No	
Wet Cell Batteries?	No		**Explosives?**	No	
Prohibited Compressed Gases?	No		**PCBs Present?**	No	
Aerosol Cans?	No		**PCB Mass (lbs)**	0	
Non-Mixed Hazardous Waste Present?	No		**Sealed Containers Over 4L?**	No	

Non-Radionuclide Pyrophoric Materials Present? No

Waste exhibiting the characteristics of Ignitability, Corrosivity or Reactivity Present? No

Wastes Incompatible with backfill, seal and panel closure materials, container and packaging materials,shipping container or other wastes? No

Impenetrable Dense Objects? No

Waste Material Items

Packaging Materials

Material Item	Quantity	Unit	Unit Wt(lbs)	Item Wt(lbs)
90 mil liner	1.000	EACH	16.000	16.000
Drum plastic bag	1.000	EACH	1.000	1.000

Waste Items byWeight

Material Item	Quantity	Unit	Unit Wt(lbs)	Item Wt(lbs)
poly bottles	1.000	EACH	10.000	10.000
Plastic bag for waste	1.000	EACH	0.250	0.250

Waste Items by Volume

Material Item	Quantity	Unit	Unit Wt(lbs)	Item Wt(lbs)
Vermiculite (95 gm/liter) .125 lb/pint	2.000	PINTS	0.125	0.250

Batch Id RTR14-00005 **Container Id** 10054382 **Analysis Id** 0000094455

Waste Parameters

Waste Parameter	Remaining Weight %	Actual Weight Lbs
Iron-based Metals/Alloys	0.000	0.000
Aluminum-based Metals/Alloys	0.000	0.000
Other metals	0.000	0.000
Other Inorganic Materials	100.000	109.995
Cellulosics	0.000	0.000
Rubber	0.000	0.000
Plastic (Waste Materials)	0.000	10.250
Inorganic matrix	0.000	0.000
Organic matrix	0.000	0.000
Soils/gravel	0.000	0.000
Steel (packaging materials)	0.000	59.000
Plastic (packaging materials)	0.000	17.000
Cellulosics Packaging	0.000	0.000

Analysis Esignature History

Esig Approval Id	User Id	Esignature Date	Comment
2679607	JCUMMINGS	25-JAN-2014 15:26	

Batch Id RTR14-00005 **Container Id** 10366291 **Analysis Id** 0000094456

Container Type A drum, 55 Gallon Drum (17H) **Analysis Status** Pass

RTR Date 25-JAN-2014 15:44 **Gross Weight** 160.965 Lbs **Net Weight** 99.965 Lbs

Equipment Z-213-101 **Waste Matrix Code** S5490 **IDC** RF-760 RFP Debris

Recording Id 1RTR14-00007 **Procedure Id** INST-OI-12 **Revision** 52 **Approval Level** SPM

Is Test Pattern Resolution Ok? Yes **Start Side** A **Replicate** No **OIO** No

Audio Visual Ok? Yes **Operator** JCUMMINGS

Result Comment Contents of this drum is primarily plastic sheeting and bagging.
AK does not concur with the recommended IDC change from UN-000 to UN-00B for container 10366291 because waste is debris retrieved from Pad 1, cells 1 and 2. Instead, AK recommends an IDC of RF-760. CHD 01/28/14
Rework to change IDC per AK. ESO 01/30/14
AK concurs with the recommended IDC, RF-760, for container 10366291. No AKR or NCR is necessary. CHD 01/30/14

Package

IDC Correct Yes **Recommended IDC** RF-760 **Summary Category** S5000

Idc Change Reason Per AK

Rigid Liner Present? No **LinerType** NO LINER

Liner Punctured? N/A **Sharp Objects?** No

Liner Lid Present? No **Sharp Objects Are Protected?** Yes

Liner Lid Deformed? N/A **Layers Of Confinement** 2

Fill Factor 95

Bag Closure Method Twisted and Taped

Liquids

Liquid Present? No **Internal Container with Liquid** No

Internal Container with Liquid 0 pints **LA Candidate** No

Liquid Between Liner & Drum 0 pints **Containerized Liquid**

Total Liquid Amount 0 pints **Containerized Liquid Amt** 0 pints

Other Liquids 0 pints **Comment**

Prohibited Liquids Present No **Comment**

Contents-Drum or Box

	Value	Comment		Value	Comment
Lead?	No		**Mercury Present?**	No	
Wet Cell Batteries?	No		**Explosives?**	No	
Prohibited Compressed Gases?	No		**PCBs Present?**	No	
Aerosol Cans?	No		**PCB Mass (lbs)**	0	
Non-Mixed Hazardous Waste Present?	No		**Sealed Containers Over 4L?**	No	

Non-Radionuclide Pyrophoric Materials Present? No

Waste exhibiting the characteristics of Ignitability, Corrosivity or Reactivity Present? No

Wastes Incompatible with backfill, seal and panel closure materials, container and packaging materials,shipping container or other wastes? No

Impenetrable Dense Objects? No

Waste Material Items

Packaging Materials

Material Item	Quantity	Unit	Unit Wt(lbs)	Item Wt(lbs)
Drum plastic bag	2.000	EACH	1.000	2.000

Waste Items byWeight

Material Item	Quantity	Unit	Unit Wt(lbs)	Item Wt(lbs)
cardboard	1.000	EACH	2.000	2.000
misc. metal	1.000	EACH	4.000	4.000
Cardboard liner	1.000	EACH	4.000	4.000

Batch Id RTR14-00005 **Container Id** 10366291 **Analysis Id** 0000094456

Waste Items by Volume

Material Item	Quantity	Unit	Unit Wt(lbs)	Item Wt(lbs)
Vermiculite (95 gm/liter) .125 lb/pint	2.000	PINTS	0.125	0.250

Waste Parameters

Waste Parameter	Remaining Weight %	Actual Weight Lbs
Iron-based Metals/Alloys	0.000	4.000
Aluminum-based Metals/Alloys	0.000	0.000
Other metals	0.000	0.000
Other Inorganic Materials	0.000	0.250
Cellulosics	0.000	6.000
Rubber	0.000	0.000
Plastic (Waste Materials)	100.000	89.715
Inorganic matrix	0.000	0.000
Organic matrix	0.000	0.000
Soils/gravel	0.000	0.000
Steel (packaging materials)	0.000	59.000
Plastic (packaging materials)	0.000	2.000
Cellulosics Packaging	0.000	0.000

Analysis Esignature History

Esig Approval Id	User Id	Esignature Date	Comment
2684840	CHINKLE	30-JAN-2014 10:33	Batch is promoted. chd 1/30/14
2684474	SOLDHAM	30-JAN-2014 08:15	
2680789	CHINKLE	28-JAN-2014 08:24	This batch is returned for rework. AK does not concur with the recommended IDC change for containers10456533, 10453439, 10368557, 10366291, 10323541 and 10145322. CHD 01/28/14
2679615	JCUMMINGS	25-JAN-2014 15:44	

Batch Id RTR14-00005 **Container Id** 10453439 **Analysis Id** 0000094459

Container Type A drum, 55 Gallon Drum (17H) **Analysis Status** Pass

RTR Date 25-JAN-2014 16:30 **Gross Weight** 141.120 Lbs **Net Weight** 80.120 Lbs

Equipment Z-213-101 **Waste Matrix Code** S5490 **IDC** RF-760 RFP Debris

Recording Id 1RTR14-00007 **Procedure Id** INST-OI-12 **Revision** 52 **Approval Level** SPM

Is Test Pattern Resolution Ok? Yes **Start Side** A **Replicate** No **OIO** No

Audio Visual Ok? Yes **Operator** JCUMMINGS

Result Comment Contents of this drum is primarily plastic sheeting and bagging.
AK does not concur with the recommended IDC change from UN-000 to UN-00B for container 10453439 because waste is debris retrieved from Pad 1, cells 1 and 2. Instead, AK recommends an IDC of RF-760. CHD 01/28/14
Rework to change IDC per AK. ESO 01/30/14
AK concurs with the recommended IDC, RF-760, for container 10453439. No AKR or NCR is necessary. CHD 01/30/14
(rework) Changed Drum bag field to 2 and plastic bag for waste field to 2. KH 03FEB14

Package

IDC Correct Yes **Recommended IDC** RF-760 **Summary Category** S5000

Idc Change Reason Per AK

Rigid Liner Present? No **LinerType** NO LINER

Liner Punctured? N/A **Sharp Objects?** No

Liner Lid Present? No **Sharp Objects Are Protected?** Yes

Liner Lid Deformed? N/A **Layers Of Confinement** 4

Fill Factor 95

Bag Closure Method Twisted and Taped

Liquids

Liquid Present? No **Internal Container with Liquid** No

Internal Container with Liquid 0 pints **LA Candidate** No

Liquid Between Liner & Drum 0 pints **Containerized Liquid**

Total Liquid Amount 0 pints **Containerized Liquid Amt** 0 pints

Other Liquids 0 pints **Comment**

Prohibited Liquids Present No **Comment**

Contents-Drum or Box

	Value	Comment		Value	Comment
Lead?	No		**Mercury Present?**	No	
Wet Cell Batteries?	No		**Explosives?**	No	
Prohibited Compressed Gases?	No		**PCBs Present?**	No	
Aerosol Cans?	No		**PCB Mass (lbs)**	0	
Non-Mixed Hazardous Waste Present?	No		**Sealed Containers Over 4L?**	No	

Non-Radionuclide Pyrophoric Materials Present? No

Waste exhibiting the characteristics of Ignitability, Corrosivity or Reactivity Present? No

Wastes Incompatible with backfill, seal and panel closure materials, container and packaging materials,shipping container or other wastes? No

Impenetrable Dense Objects? No

Waste Material Items

Packaging Materials

Material Item	Quantity	Unit	Unit Wt(lbs)	Item Wt(lbs)
Drum plastic bag	2.000	EACH	1.000	2.000

Waste Items byWeight

Material Item	Quantity	Unit	Unit Wt(lbs)	Item Wt(lbs)
Cardboard liner	1.000	EACH	4.000	4.000
Plastic bag for waste	2.000	EACH	0.250	0.500

Batch Id RTR14-00005 **Container Id** 10453439 **Analysis Id** 0000094459

Waste Items by Volume

Material Item	Quantity	Unit	Unit Wt(lbs)	Item Wt(lbs)

Waste Parameters

Waste Parameter	Remaining Weight %	Actual Weight Lbs
Iron-based Metals/Alloys	0.000	0.000
Aluminum-based Metals/Alloys	0.000	0.000
Other metals	0.000	0.000
Other Inorganic Materials	0.000	0.000
Cellulosics	0.000	4.000
Rubber	0.000	0.000
Plastic (Waste Materials)	100.000	76.120
Inorganic matrix	0.000	0.000
Organic matrix	0.000	0.000
Soils/gravel	0.000	0.000
Steel (packaging materials)	0.000	59.000
Plastic (packaging materials)	0.000	2.000
Cellulosics Packaging	0.000	0.000

Analysis Esignature History

Esig Approval Id	User Id	Esignature Date	Comment
2686089	KHUGHES	03-FEB-2014 07:24	
2684838	CHINKLE	30-JAN-2014 10:33	Batch is promoted. chd 1/30/14
2684476	SOLDHAM	30-JAN-2014 08:18	
2680786	CHINKLE	28-JAN-2014 08:24	This batch is returned for rework. AK does not concur with the recommended IDC change for containers10456533, 10453439, 10368557, 10366291, 10323541 and 10145322. CHD 01/28/14
2679622	JCUMMINGS	25-JAN-2014 16:31	

Batch Id RTR14-00005 **Container Id** 10456533 **Analysis Id** 0000094460

Container Type A drum, 55 Gallon Drum (17H) **Analysis Status** Pass

RTR Date 25-JAN-2014 16:58 **Gross Weight** 617.400 Lbs **Net Weight** 556.400 Lbs

Equipment Z-213-101 **Waste Matrix Code** S5490 **IDC** RF-760 RFP Debris

Recording Id 1RTR14-00007 **Procedure Id** INST-OI-12 **Revision** 52 **Approval Level** SPM

Is Test Pattern Resolution Ok? Yes **Start Side** A **Replicate** No **OIO** No

Audio Visual Ok? Yes **Operator** JCUMMINGS

Result Comment Contents of this drum is primarily construction rubble.
AK does not concur with the recommended IDC change from UN-000 to UN-00C for container 10456533 because waste is debris retrieved from Pad 1, cells 1 and 2. Instead, AK recommends an IDC of RF-760. CHD 01/28/14
Rework to change IDC per AK. ESO 01/30/14
AK concurs with the recommended IDC, RF-760, for container 10456533. No AKR or NCR is necessary. CHD 01/30/14

Package

IDC Correct Yes **Recommended IDC** RF-760 **Summary Category** S5000

Idc Change Reason Per AK

Rigid Liner Present? No **LinerType** NO LINER

Liner Punctured? N/A **Sharp Objects?** No

Liner Lid Present? No **Sharp Objects Are Protected?** Yes

Liner Lid Deformed? N/A **Layers Of Confinement** 2

Fill Factor 90

Bag Closure Method Twisted and Taped

Liquids

Liquid Present? No **Internal Container with Liquid** No

Internal Container with Liquid 0 pints **LA Candidate** No

Liquid Between Liner & Drum 0 pints **Containerized Liquid**

Total Liquid Amount 0 pints **Containerized Liquid Amt** 0 pints

Other Liquids 0 pints **Comment**

Prohibited Liquids Present No **Comment**

Contents-Drum or Box

	Value	Comment		Value	Comment
Lead?	No		**Mercury Present?**	No	
Wet Cell Batteries?	No		**Explosives?**	No	
Prohibited Compressed Gases?	No		**PCBs Present?**	No	
Aerosol Cans?	No		**PCB Mass (lbs)**	0	
Non-Mixed Hazardous Waste Present?	No		**Sealed Containers Over 4L?**	No	

Non-Radionuclide Pyrophoric Materials Present? No

Waste exhibiting the characteristics of Ignitability, Corrosivity or Reactivity Present? No

Wastes Incompatible with backfill, seal and panel closure materials, container and packaging materials,shipping container or other wastes? No

Impenetrable Dense Objects? No

Waste Material Items

Packaging Materials

Material Item	Quantity	Unit	Unit Wt(lbs)	Item Wt(lbs)
Drum plastic bag	2.000	EACH	1.000	2.000

Waste Items byWeight

Material Item	Quantity	Unit	Unit Wt(lbs)	Item Wt(lbs)
Cardboard liner	1.000	EACH	4.000	4.000

Waste Items by Volume

Material Item	Quantity	Unit	Unit Wt(lbs)	Item Wt(lbs)
Oil-Dri (Inside 55 gal drum)	2.000	PINTS	0.420	0.840

Batch Id RTR14-00005 **Container Id** 10456533 **Analysis Id** 0000094460

Waste Parameters

Waste Parameter	Remaining Weight %	Actual Weight Lbs
Iron-based Metals/Alloys	0.000	0.000
Aluminum-based Metals/Alloys	0.000	0.000
Other metals	0.000	0.000
Other Inorganic Materials	100.000	552.400
Cellulosics	0.000	4.000
Rubber	0.000	0.000
Plastic (Waste Materials)	0.000	0.000
Inorganic matrix	0.000	0.000
Organic matrix	0.000	0.000
Soils/gravel	0.000	0.000
Steel (packaging materials)	0.000	59.000
Plastic (packaging materials)	0.000	2.000
Cellulosics Packaging	0.000	0.000

Analysis Esignature History

Esig Approval Id	User Id	Esignature Date	Comment
2684837	CHINKLE	30-JAN-2014 10:33	Batch is promoted. chd 1/30/14
2684478	SOLDHAM	30-JAN-2014 08:19	
2680785	CHINKLE	28-JAN-2014 08:24	This batch is returned for rework. AK does not concur with the recommended IDC change for containers10456533, 10453439, 10368557, 10366291, 10323541 and 10145322. CHD 01/28/14
2679627	JCUMMINGS	25-JAN-2014 16:58	

------End of RTR Analysis Report------

AMWTP
Advanced Mixed Waste Treatment Project

AMWTP
Checklist Report

Date: 12-Sep-2014
Time: 13:27

Batch Id RTR14-00005 **Open Date** 23-JAN-14 **Close Date** 25-JAN-14

Reviewer ROE THOMPSON **Approval Level** Independent Technical Reviewer
Approval Date 01-FEB-14 **Review Iteration** 1

Question Text	Answer	Requirement	Comment
1. Is the Batch Data Report (BDR) and Quality Assurance (QA) documentation complete with the following: o Real-Time Radiography (RTR) Batch Coversheet o Table of Contents (manual review only) o RTR Analysis reports o Replicate Scan o Replicate Comparison o Independent Observation o ITR checklist (Form-1412, manual review only) o Form-1491, Batch Data Report Supplemental Comment Form (manual review only) o Associated NCRs (referenced in Waste Tracking System [WTS]) o Audio/Video Recording References?	Yes		
2. Are there 20 containers or less in the batch?	Yes		
3. Was the image quality indicator (IQI) satisfactory?	Yes		
4. Does every container in the batch reference an audio/video recording?	Yes		
5. Is there a completed radiography data analysis for each container in the batch?	Yes		
6. Was each RTR Operator qualified at the time of the radiography event?	Yes		
7. Was the data generated in a technically correct manner using the correct revision of INST-OI-12, Real-Time Radiography Operations (Drum)?	Yes		
8. Was the correct procedure and revision documented on all analysis reports?	Yes		
9. Has the E-signature History review been performed?	Yes		
10. Does the RTR operator confirm that the physical form matched the waste stream description and waste matrix code?	Yes		
11. Does the packaging weight plus the net weight equal the gross weight of the container in the estimated waste material parameters?	Yes		
12. Were all entries into the waste material items section assigned to the correct waste material parameters?	Yes		
13. Has the description of rigid liners and layers of confinement been properly documented, as applicable?	Yes		
14. Was the presence or absence of prohibited items properly documented?	Yes		
15. If prohibited items were identified, have appropriate nonconformance reports (NCRs) been generated?	Yes		
16. Were the containers examined between October and April in compliance with the preheat requirements?	Yes		
17. Were all proper units and significant figures used for all reported volumes/weights?	Yes		
18. Was there a valid replicate scan performed (at least one container per day, or once per testing batch,	Yes		Container 10034756; on January 25, 2014 the Replicate scan was performed by a qualified

Batch Id RTR14-00005 **Open Date** 23-JAN-14 **Close Date** 25-JAN-14

Reviewer ROE THOMPSON **Approval Level** Independent Technical Reviewer
Approval Date 01-FEB-14 **Review Iteration** 1

Question Text	Answer	Requirement	Comment
whichever is less frequent)? o Record the container number, the replicate observation date in the comment section of this checklist. o Record any issues or concerns in the batch comment section.			operator. There were small differences between the Original and Replicate. I agree with the Original operator No rework needed.
19. Was there a valid Operator Independent Observation (OIO) (not the replicate) performed (at least one container per day, or once per testing batch, whichever is less frequent)? o Record the container number and the OIO date in the comment section of this checklist. o Record any issues or concerns in the batch comment section.	Yes		Container 10220519; on January 25, 2014 the OIO scan was performed by a qualified operator. There were small differences between the Original and OIO. I agree with the Original operator No rework needed
20. Were any significant differences identified that would affect the original disposition of the replicate and OIO, or affect data quality objectives (DQOs)? If so, ensure an NCR was generated and WTS flagged.	No		
21. Were the RTR quality assurance objectives (QAOs) met? o Precision o Accuracy o Completeness o Comparability	No		See Batch Comments.
22. Were any NCRs generated for containers containing prohibited items, or any non-conforming conditions that failed to meet DQOs or QAOs? o If so, include the NCRs, as appropriate, in the BDR.	Yes		
23. Were the rework requirements clearly identified in WTS or on the BDR?	Yes		See Batch Comments

Batch Id RTR14-00005 **Open Date** 23-JAN-14 **Close Date** 25-JAN-14

Reviewer ROE THOMPSON **Approval Level** Independent Technical Reviewer

Approval Date 06-FEB-14 **Review Iteration** 2

Question Text	Answer	Requirement	Comment
1. Is the Batch Data Report (BDR) and Quality Assurance (QA) documentation complete with the following: o Real-Time Radiography (RTR) Batch Coversheet o Table of Contents (manual review only) o RTR Analysis reports o Replicate Scan o Replicate Comparison o Independent Observation o ITR checklist (Form-1412, manual review only) o Form-1491, Batch Data Report Supplemental Comment Form (manual review only) o Associated NCRs (referenced in Waste Tracking System [WTS]) o Audio/Video Recording References?	Yes		
2. Are there 20 containers or less in the batch?	Yes		
3. Was the image quality indicator (IQI) satisfactory?	Yes		
4. Does every container in the batch reference an audio/video recording?	Yes		
5. Is there a completed radiography data analysis for each container in the batch?	Yes		
6. Was each RTR Operator qualified at the time of the radiography event?	Yes		
7. Was the data generated in a technically correct manner using the correct revision of INST-OI-12, Real-Time Radiography Operations (Drum)?	Yes		
8. Was the correct procedure and revision documented on all analysis reports?	Yes		
9. Has the E-signature History review been performed?	Yes		
10. Does the RTR operator confirm that the physical form matched the waste stream description and waste matrix code?	Yes		
11. Does the packaging weight plus the net weight equal the gross weight of the container in the estimated waste material parameters?	Yes		
12. Were all entries into the waste material items section assigned to the correct waste material parameters?	Yes		
13. Has the description of rigid liners and layers of confinement been properly documented, as applicable?	Yes		
14. Was the presence or absence of prohibited items properly documented?	Yes		
15. If prohibited items were identified, have appropriate nonconformance reports (NCRs) been generated?	Yes		
16. Were the containers examined between October and April in compliance with the preheat requirements?	Yes		
17. Were all proper units and significant figures used for all reported volumes/weights?	Yes		
18. Was there a valid replicate scan performed (at least one container per day, or once per testing batch,	Yes		Container 10034756; on January 25, 2014 the Replicate scan was performed by a qualified

Batch Id RTR14-00005 **Open Date** 23-JAN-14 **Close Date** 25-JAN-14

Reviewer ROE THOMPSON **Approval Level** Independent Technical Reviewer
Approval Date 06-FEB-14 **Review Iteration** 2

Question Text	Answer	Requirement	Comment
whichever is less frequent)? o Record the container number, the replicate observation date in the comment section of this checklist. o Record any issues or concerns in the batch comment section.			operator. There were small differences between the Original and Replicate. I agree with the Original operator No rework needed.
19. Was there a valid Operator Independent Observation (OIO) (not the replicate) performed (at least one container per day, or once per testing batch, whichever is less frequent)? o Record the container number and the OIO date in the comment section of this checklist. o Record any issues or concerns in the batch comment section.	Yes		Container 10220519; on January 25, 2014 the OIO scan was performed by a qualified operator. There were small differences between the Original and OIO. I agree with the Original operator No rework needed
20. Were any significant differences identified that would affect the original disposition of the replicate and OIO, or affect data quality objectives (DQOs)? If so, ensure an NCR was generated and WTS flagged.	No		
21. Were the RTR quality assurance objectives (QAOs) met? o Precision o Accuracy o Completeness o Comparability	Yes		
22. Were any NCRs generated for containers containing prohibited items, or any non-conforming conditions that failed to meet DQOs or QAOs? o If so, include the NCRs, as appropriate, in the BDR.	Yes		
23. Were the rework requirements clearly identified in WTS or on the BDR?	Yes		See Batch Comments

Batch Id RTR14-00005 **Open Date** 23-JAN-14 **Close Date** 25-JAN-14

Reviewer DAVE MARQUARDT **Approval Level** SPM Data Validation
Approval Date 07-FEB-14 **Review Iteration** 1

Question Text	Answer	Requirement	Comment
(1) Has the batch received a Data Generation Level Independent Technical Review?	Yes	MP-TRUW-8.2, C3-10b(1)	
(2) Is the Independent Technical Review checklist complete?	Yes	MP-TRUW-8.2, C3-10b(1)	
(3) When identified, were polychlorinated biphenyls (PCBs), mercury, lead, or other hazardous contaminants consistent with the waste stream acceptable knowledge (AK) Summary Report(s) and/or AK documentation?	Yes	MP-TRUW-8.2, C4-3	
(4) Are any ignitable, corrosive, or reactive wastes identified in this waste?	No	MP-TRUW-8.2, C4-3	
(5) Are the packaging configurations identified on the real-time radiography (RTR) consistent with the waste stream AK Summary Report(s) and/or AK documentation?	Yes	MP-TRUW-8.2, C4-3	
(6) Do the containers in this batch contain typical waste items consistent with waste stream AK Summary Report(s) and/or AK documentation?	Yes	MP-TRUW-8.2, C4-3	
(7) Are the Waste Matrix Codes (WMCs) and physical form descriptions consistent with AK?	Yes	MP-TRUW-8.2, C4-3	
(8) Have all AK discrepancies been resolved and have all AK Resolution checklists been approved? Reference all waste stream AK documentation used in review of this data package.	N/A	MP-TRUW-8.2, C4-3	No discrepancies. RPT-TRUW-05. RPT-TRUW-06. RPT-TRUW-12. RPT-TRUW-56. All drums except 10135407, 10339021, 10425610, 10042328, 10310178, 10182410, 10034756, 10336333 and 10054382 were assigned an IDC at RTR. Previously they all had unknown or no historical information.
(9) Have all applicable Quality Assurance Objectives (QAOs) been met, including precision, accuracy, completeness, and comparability, by using the appropriate acceptance criteria for each as specified in MP-TRUW-8.2, Quality Assurance Project Plan Section C3-4? Precision ¿ Verified prior to use by tuning precisely enough to demonstrate compliance with QAOs through viewing an image test pattern, as evidenced by a satisfactory Image Quality Indicator (IQI). ¿ Have discrepancies, if any, between radiography operators been reconciled? Accuracy ¿ Use of a target to tune the image for maximum sharpness as evidenced by a satisfactory IQI and by requiring operators to successfully identify 100% of the required items in a training container during initial and subsequent qualifications. Completeness ¿ An audio/videotape (or equivalent media) of the radiography examination and a validated radiography data form will be obtained for 100% of the retrievably stored waste container in the program for all waste containers subject to radiography. Comparability ¿ Use of standardized radiography procedures and operator qualifications.	Yes	MP-TRUW-8.2, C3-4a	
(10) Do the waste container contents match the WMC,	Yes	MP-TRUW-8.2, C1-3 and	

Batch Id RTR14-00005 **Open Date** 23-JAN-14. **Close Date** 25-JAN-14

Reviewer DAVE MARQUARDT **Approval Level** SPM Data Validation
Approval Date 07-FEB-14 **Review Iteration** 1

Question Text	Answer	Requirement	Comment
waste stream description and identify the absence of prohibited items?		B3-11	
(11) If residual liquids exist in the container, is an estimate of quantity given?	Yes	MP-TRUW-8.2, C1-3	
(12) Do the individual container reports contain the (a) IDC, (b) Waste Matrix Code, (c) audio/video recording reference, (d) gross container weight, (e) waste material parameter weights, and (f) signature and date of examination?	Yes	MP-TRUW-8.2, C1-3 and C3-11a	
(13) Have the IDC, WMC, and/or waste stream for all containers in the batch remained the same as originally assigned by the historical designation? If not, note the container number in the comment field and notify the Acceptable Knowledge Expert (AKE) if NCR does not exist on the WMC and IDC change.	No	MP-TRUW-8.2, C1-3 and C3-4a	All drums except 10135407, 10339021, 10425610, 10042328, 10310178, 10182410, 10034756, 10336333 and 10054382 were assigned an IDC at RTR. Previously they all had unknown or no historical information.
(14) Was a replicate scan performed by an independent operator on at least one container per day or once per testing batch, whichever is less frequent, by a qualified radiography operator that was not involved in the original scan of the waste container?	Yes	MP-TRUW-8.2, B1-3, C3-4a, and C3-10b(1)	
(15) Has an independent observation of one scan (not the replicate) been performed by a qualified operator that was not involved in the original scan of the waste container, at a rate of once per day or once per batch, whichever is less frequent? Record date of observation and any issues or concerns in the comment section.	Yes	MP-TRUW-8.2, C1-3 and C3-4a	Container 10220519. January 25, 2014. No issues.
(16) Did personnel having current qualifications perform all RTR examinations?	Yes	MP-TRUW-8.1, Appendix F	
(17) Verify the correct procedure and revision number were used for all containers in this batch.	Yes	MP-TRUW-8.2, C3-4a	
(18) Verify the audio and video checks were performed and are satisfactory.	Yes	MP-TRUW-8.2, C3-4a	
(19) Verify that there are 20 or fewer containers in the batch.	Yes	MP-TRUW-8.2, C1-3	
(20) Does the data for all containers within this batch meet the review, validation, and verification requirements? · Are proper units (e.g. Liters or pounds) and significant figure used? · Is the BDR complete (all pages identified in the BDR and numbered accordingly)? - RTR Batch Coversheet - Table of Contents (manual review only) - RTR Analysis reports - Replicate Scan - Replicate Comparison - Independent Observation - Form-1412, ITR checklist - Associated NCRs - Form, 1491, Batch Data Report Supplemental Comment Form, as applicable - Audio/Video Recording References	Yes	MP-TRUW-8.2, C3 10b(2)	
(21) Review all NCR(s) (open and closed). Can the batch be approved?	Yes	MP-TRUW-8.2, C3-13	

Batch Id RTR14-00005 **Open Date** 23-JAN-14 **Close Date** 25-JAN-14

Reviewer DAVE MARQUARDT **Approval Level** SPM Data Validation

Approval Date 07-FEB-14 **Review Iteration** 1

Question Text	Answer	Requirement	Comment
(22) Is all data associated with this BDR acceptable for signature release?	Yes	MP-TRUW-8.2, C3 10b(2)	

Batch Id RTR14-00005 **Open Date** 23-JAN-14 **Close Date** 25-JAN-14

Esignature History

Esig Approval ID	User ID	Esig Date	Approval Level	Comments
2689824	DMARQUARDT	07-FEB-14	SPM	Reviewed and validated. Approve.
2688827	RBTHOMPSON	06-FEB-14	ITR	Promote to SPM
2685874	RBTHOMPSON	01-FEB-14	ITR	Demote to OPS.

AMWTP
Advanced Mixed Waste Treatment Project

AMWTP

Non-Conformance Report

Date: 12-Sep-2014

Time: 13:28

*****Batch NCR(s)*****

Batch Type	RTR	Batch ID	RTR14-00005		
Trackwise Number		**Status**		**Opened Date**	**Closed Date**

*****Container NCR(s)*****

Container ID *or related Batch ID*	Trackwise Number	Status	Opened Date	Closed Date
10135407	26410	CLOSED	08-MAR-07	11-FEB-14
10145322	83344	OPEN	24-JAN-14	
10220519	83355	CLOSED	25-JAN-14	01-JUL-14
10313178	67329	CLOSED	10-DEC-11	10-FEB-14
10313178	83349	CLOSED	24-JAN-14	17-APR-14
10336333	83358	CLOSED	25-JAN-14	24-APR-14
10369057	83343	OPEN	24-JAN-14	
10456533	83727	OPEN	11-FEB-14	
10494030	83353	OPEN	24-JAN-14	
10494031	83351	OPEN	24-JAN-14	
10494031	83352	OPEN	24-JAN-14	
10494032	83347	OPEN	24-JAN-14	
10182410	83381	OPEN	26-JAN-14	
10456533	83730	OPEN	11-FEB-14	
10494030	73858	OPEN	29-NOV-12	
10494032	73858	OPEN	29-NOV-12	

*****End of Non-Conformance Report*****

AMWTP

Advanced Mixed Waste Treatment Project

AMWTP

RTR Replicate Comparison Report

Date: 12-Sep-2014

Time: 13:28

RTR Batch Id: RTR14-00005 **Container Id:** 10034756 **Equipment Id:** Z-213-101

Container type Description: **drum, 83 Gallon** Gen-IDC: **RF-807** Gross Weight(Lbs): **566.685**

	Original Analysis		Replicate Analysis	
Analysis Id / Date:	0000094446	25-JAN-2014 12:22	0000094450	25-JAN-2014 13:47
Procedure /Revision:	INST-OI-12	52	INST-OI-12	52
Recording Media Id:	1RTR14-00007		1RTR14-00007	
Starting Position:	A		A	
Is Test Pattern Resolution Ok?	Y		Y	
Audio Visual Ok?	Y		Y	
Personnel Name:	MICHAEL RICKS		JOHN CUMMINGS	
IDC Ok? / Recommended IDC:	Y		Y	
IDC Change Reason:				
Summary Category / Waste matrix Code:	S3000	S3121	S3000	S3121
Packaging				
Rigid Liner Present?	Y		Y	
Liner Type Code:	TYPE 3		TYPE 3	
Liner Punctured:	Y		Y	
Liner Lid Deformed:	NA		N	
Layers Of Confinement:	2		2	
Sharp Objects?	N		N	
Sharp Objects Protected?	Y		Y	
Fill Factor(%):	75		75	
Bag Closure Method:	Twisted and Taped		Twisted and Taped	
Liner Lid Present?:	N		Y	
Liquids: (Volume in Pints)				
Liquid Present?	N		N	
Internal Container with Liquid?	0		0	
Containerized Liquid	N		N	
Other Liquids:	0		0	
Internal Container with Liquid Amt:	0		0	
Liquid Between Liner and Drum:	0		0	
Containerized Liquid:	0		0	
Total Liquid Amount:	0		0	
LA Candidate?	N		N	
Prohibited Liquids Present?	N		N	

Contents:	Y/N	Comments	Y/N	Comments
Sealed Containers over 4L?	N		N	
Lead Present?	N		N	
Explosives Present?	N		N	
Mercury Present?	N		N	
Wet Cell Batteries Detected?	N		N	

AMWTP

Advanced Mixed Waste Treatment Project

AMWTP

RTR Replicate Comparison Report

Date: 12-Sep-2014

Time: 13:28

RTR Batch Id: RTR14-00005 **Container Id:** 10034756 **Equipment Id:** Z-213-101

	Original Analysis	Replicate Analysis
Prohibited Compressed Gas Present	N	N
PCBs Present?	N	N
PCB Mass (lbs)	0	0
Non-Radionuclide Pyrophoric Materials Present?	N	N
Waste exhibiting the characteristics of ignitability, Corrosivity or reactivity Present?	N	N
Non-Mixed Hazardous Waste Present	N	N
Waste Incompatibles with backfill, Seal and panel closure materials, container and packaging material, shipping container or other wastes?	N	N
Impenetrable Dense Objects?	N	N
Result Comment:	Overpacked 55 gal drum appears to contain sludge.	Contents of this drum is primarily sludge.

----------E-signature----------

Esig Approval ID	User ID	Signature Date	Comment
2685866	RBTHOMPSON	01-FEB-14	

-----End of RTR Replicate Comparison Report-----

AMWTP
Advanced Mixed Waste Treatment Project

AMWTP

RTR OIO Comparison Report

Date: 12-Sep-2014

Time: 13:29

RTR Batch Id: RTR14-00005 **Container Id:** 10220519 **Equipment Id:** Z-213-101

Container type Description: **drum, 83 Gallon** Gen-IDC: **RF-440** Gross Weight(Lbs): **399.105**

	Original Analysis		OIO Analysis	
Analysis Id / Date:	0000094444	25-JAN-2014 12:02	0000094448	25-JAN-2014 13:23
Procedure /Revision:	INST-OI-12	52	INST-OI-12	52
Recording Media Id:	1RTR14-00007		1RTR14-00007	
Starting Position:	A		A	
Is Test Pattern Resolution Ok?	Y		Y	
Audio Visual Ok?	Y		Y	
Personnel Name:	MICHAEL RICKS		JOHN CUMMINGS	
IDC Ok? / Recommended IDC:	Y		Y	
IDC Change Reason:				
Summary Category / Waste matrix Code:	S5000	S5122	S5000	S5122
Packaging				
Rigid Liner Present?	Y		Y	
Liner Type Code:	TYPE 1		TYPE 1	
Liner Punctured:	N		N	
Liner Lid Deformed:	Y		N	
Layers Of Confinement:	4		4	
Sharp Objects?	N		N	
Sharp Objects Protected?	Y		Y	
Fill Factor(%):	80		65	
Bag Closure Method:	Twisted and Taped		Twisted and Taped	
Liner Lid Present?:	Y		Y	
Liquids: (Volume in Pints)				
Liquid Present?	N		N	
Internal Container with Liquid?	0		0	
Containerized Liquid	N		N	
Other Liquids:	0		0	
Internal Container with Liquid Amt:	0		0	
Liquid Between Liner and Drum:	0		0	
Containerized Liquid:	0		0	
Total Liquid Amount:	0		0	
LA Candidate?	N		N	
Prohibited Liquids Present?	N		N	

Contents:	Y/N	Comments	Y/N	Comments
Sealed Containers over 4L?	N		N	
Lead Present?	N		N	
Explosives Present?	N		N	
Mercury Present?	N		N	
Wet Cell Batteries Detected?	N		N	

AMWTP
Advanced Mixed Waste Treatment Project

AMWTP

RTR OIO Comparison Report

Date: 12-Sep-2014

Time: 13:29

RTR Batch Id: RTR14-00005 **Container Id:** 10220519 **Equipment Id:** Z-213-101

	Original Analysis	OIO Analysis
Prohibited Compressed Gas Present	N	N
PCBs Present?	N	N
PCB Mass (lbs)	0	0
Non-Radionuclide Pyrophoric Materials Present?	N	N
Waste exhibiting the characteristics of ignitability, Corrosivity or reactivity Present?	N	N
Non-Mixed Hazardous Waste Present	N	N
Waste Incompatibles with backfill, Seal and panel closure materials, container and packaging material, shipping container or other wastes?	N	N
Impenetrable Dense Objects?	N	N.
Result Comment:	Overpacked 55 gal drum contains raschig rings in fiberpaks.	Contents of this drum is primarily raschig rings.

----------E-signature----------

Esig Approval ID	User ID	Signature Date	Comment

-----End of RTR OIO Comparison Report-----

AMWTP
Advanced Mixed Waste Treatment Project

NON-CONFORMANCE REPORT

WIPP DATA - RTR

NCR #: 83343

Title: RTR Characterization

Originator: Atwell, Aaron	**Date Opened:** 01/24/14
Responsible Dept: Plant Manager	**Batch #:** RTR14-00005
Container ID: 10369057	**Tag Applied:** Yes

Characterization Problem:

Originator Sign By: Aaron Atwell	**Originator Sign Date:** 01/24/14

Production Comments:

Aprox 50% of the waste in this container is impenetrable.

Approved Remediation:

Performed By:	**Performed Date:**

Waste Programs Evaluation/Verification:

SPM Verification Complete By:	**SPM Verification Complete Date:**
MLLW/LLW Verification Complete By:	**MLLW/LLW Verification Complete Date:**

QA Closure Comments:

QA Add'l Action Reqd By:	**QA Add'l Action Reqd Date:**
QA Verification Complete By:	**QA Verification Comp Date:**

AMWTP Advanced Mixed Waste Treatment Project

NONCONFORMANCE REPORT

NCR No.: 83730

PARENT:

Title: Impenetrable Waste not identified at RTR or ITR.

Category: WIPP Data	**Affected Item Type:** Container ID
Affected Item: 10456533	
Originator: Sorenson, Mark	**Date Opened:** 02/11/14
Source Type: As Found Condition	**ORPS Reportable:**
Source Type Doc. No.	
ORPS No.:	**ORPS Category:**
Finding #:	
Requirement Violated: INST-OI-12 Rev. 52 4.6.37.1, MP-TRUW-8.8 3.1.3.14	
Shipment No.	**Payload No.**
Equipment ID:	**PO Number:**
Batch No.	
Container ID: 10456533	
Tag Applied:	**No. of Tags:**

Description of Condition:

After review of the A/V recording by the RTR/SME the waste appears to be Impenetrable. Unable to verify the absence of prohibited items. This condition was not identified and an NCR was not intiated as required per INST-OI-12 and MP-TRUW-8.8.
MS 02/11/2014

Manager Review By: Trackwise AdminstratorTrackwise Administrator	**Manager Review Date:** 02/17/1402/18/14
QA Closed-Cancelled By:	**QA Closed-Cancelled Date:**

Note: QA Closed-Cancelled Signature is based on concurrence between Responsible Manager and Quality Assurance

Is Valid: Yes	**WIPP Submittal Req'd?** Yes
Stop Work Order: No	**Is CAR Req'd?** No
HSS-OE Applicable: Yes	**NTS Report Number:**
HSS-OE Reportable: No	**NTS Report Date:**

HSS-OE Regulations

10 CFR 820: No	**10 CFR 830 Subpart A:** Yes
10 CFR 830 Subpart B: No	**10 CFR 835 Rad Protection:** No
10 CFR 851Safety/Health: No	**Quality (Type Material):** WIPP
	Responsible Department: Waste Programs
	Functional Area: TRU Programs
	Disposition Due Date: 04/01/14
QA Mgr Rev Sign By: Terry Cook	**QA Mgr Rev Sign Date:** 03/11/14
	Date Due: 05/13/15
Disposition: Rework	**Responsible Manager:** Byram, George

AMWTP
Advanced Mixed Waste Treatment Project

NONCONFORMANCE REPORT

NCR No.: 83730

PARENT:

	Assigned Actionee:
Conditional Use: No	**Conditional Use Expiration Date:**
USQ Screen Req'd? NO	**USQ Screen No.:**
Root Cause Analysis: No	
Level A Cause Code: A3 - Human Performance LTA	**Contributing Cause Level A:** A3 - Human Performance LTA
Level B Cause Code: B1 - Skill Based Error	**Contributing Cause Level B:** B1 - Skill Based Error
Level C Cause Code: C03 - Incorrect Performance Due to Mental Lapse	**Contributing Cause Level C:** C03 - Incorrect Performance Due to Mental Lapse

Disposition Description:

Develop training needs for RTR operator and ITR, and document on Form 1039
Conduct training with RTR operator and ITR, and document on Form 1039
Attach objective evidence of completed training (Form 1039s for operator and ITR)
Include impenetrable requirements for waste in an upcoming RTR tailgate to disseminate to RTR operators/RTR ITR's
Attach objective evidence of completed training

Mgr Disp App By: Steve Tallman	**Mgr Disp App Date:** 05/13/14
QA Add'l Disp. Req'd By:	**QA Add'l Disp. Req'd Date:**
Mgr Add'l. Disp App By:	**Mgr Add'l. Disp App Date:**
QA Mgr Rev Disp Sign By: Camille Robison	**QA Mgr Rev Disp Sign Date:** 05/13/14

CAP Complete Comments:

Form 1039 completed for operator and ITR
Training completed with RTR operator and ITR
Form 1039 attached as objective evidence (see attached file)
TGRTR0000057 was developed and presented to RTR operators. Impenetrable critieria was included in the brief (see attached tailgate)
TGRTR0000057 roster of attendess is attached

Action Complete By:	**Action Complete Date:**
QA Add'l Action Req'd By:	**QA Add'l Action Req'd Date:**
Add'l Action Complete By:	**Add'l Action Complete Date:**
QA Verification Complete By:	**QA Verification Comp Date:**

DIVIDER

PAGE

AMWTP

Advanced Mixed Waste Treatment Project

AMWTP

Batch Report Coversheet

Date: 12-Sep-2014

Time: 13:32

Batch Type Real Time Radiography

Batch Report No. RTR14-00086

Batch Id RTR14-00086

Open Date 16-APR-14 11:56:20

Close Date 17-APR-14 16:15:12

Batch Status AP

Test Facility Idaho AMWTP

Equipment Id Z-213-106 RTR Station Right (213-106)

Container Id	IDC	Analysis Id	Date Examined	QC Type	Analysis Status	Operator
10355920	SD-177	0000096632	16-APR-14 11:56:20	Original	P	CRAIG SIMMONS
10350015	SD-177	0000096634	16-APR-14 12:15:30	Original	P	CRAIG SIMMONS
10229930	BN-511	0000096635	16-APR-14 12:55:31	Original	P	CRAIG SIMMONS
10355920	SD-177	0000096637	16-APR-14 13:43:51	RTR OIO	P	DIANNA MOORE
10350015	SD-177	0000096638	16-APR-14 14:16:01	Replicate / Duplicate	P	DIANNA MOORE
10356098	SD-177	0000096639	16-APR-14 14:45:48	Original	P	CRAIG SIMMONS
10479527	BN-524	0000096641	16-APR-14 15:40:42	Original	P	DIANNA MOORE
10355921	SD-177	0000096643	16-APR-14 16:12:43	Original	P	CRAIG SIMMONS
10350139	RF-760	0000096650	17-APR-14 08:55:12	Original	P	CINDY TIEGS
10353586	SD-177	0000096652	17-APR-14 09:19:08	Original	P	CRAIG SIMMONS
10355860	SD-177	0000096654	17-APR-14 10:13:39	Original	P	KRISANN HUGHES
10490092	RF-760	0000096655	17-APR-14 10:54:40	Original	P	CRAIG SIMMONS
10490226	RF-760	0000096656	17-APR-14 11:11:36	Original	P	CRAIG SIMMONS
10514425	RF-760	0000096657	17-APR-14 11:30:08	Original	P	CRAIG SIMMONS
10514676	RF-760	0000096658	17-APR-14 11:53:48	Original	P	CRAIG SIMMONS
10514419	RF-760	0000096659	17-APR-14 13:01:02	Original	P	CRAIG SIMMONS
10513714	RF-760	0000096660	17-APR-14 13:27:10	Original	P	CRAIG SIMMONS
10514677	RF-760	0000096661	17-APR-14 13:56:12	Original	P	CRAIG SIMMONS
10514674	RF-760	0000096662	17-APR-14 14:19:57	Original	P	CRAIG SIMMONS
10405601	RF-330	0000096665	17-APR-14 15:27:19	Original	P	DIANNA MOORE
10351625	SD-177	0000096666	17-APR-14 15:54:03	Original	P	CRAIG SIMMONS
10350049	SD-176	0000096668	17-APR-14 16:14:12	Original	P	KRISANN HUGHES

INFORMATION ONLY

**********Batch Comments**********

Written By	Date	Comment
CHINKLE	28-APR-14 15:09:49	28-APR-14 CHINKLE AKE This batch is returned for rework. AK does not concur with the recommended IDC change for containers 10514677, 10514676, 10514674, 10514425, 10514419, 10513714, 10490226, 10490092, 10356098, 10355921, 10355920, 10355860, 10353586, 10351625, 10350049, 10350015 and 10229930. CHD 04/28/14
CSIMMONS	29-APR-14 15:00:30	AK rework complete.
CHINKLE	30-APR-14 05:12:51	28-APR-14 CHINKLE AKE This batch is returned for rework. AK does not concur with the recommended IDC change for containers 10514677, 10514676, 10514674, 10514425, 10514419, 10513714, 10490226, 10490092, 10356098, 10355921, 10355920, 10355860, 10353586, 10351625, 10350049, 10350015 and 10229930. CHD 04/28/14 30-APR-14 CHINKLE AKE Batch is promoted. chd 4/30/14
JSIMONSON	04-MAY-14 10:00:48	This batch was validated electronically only per MP-TRUW-8.8.
JSIMONSON	04-MAY-14 10:33:37	Demoted to Operations for rework.
KHUGHES	04-MAY-14 10:54:17	Completed rework
JSIMONSON	04-MAY-14 11:03:11	Rework: Drum 10355860. Operator Recommended IDC UN-00C, but AK and RTR SME did not concur and Recommended IDC SD-177. Please review, add a statement to the Result Comment to disregard Operator's description of the waste, Per RTR SME review, waste is primarily debris in the form of concrete pieces, Add Material Item, Soil, by Weight, 100 lbs, one each, 100% Soils/gravel, and update Remaining Contents of Container to 100% Other Inorganic Materials, as necessary.
JSIMONSON	04-MAY-14 11:03:23	Note: Information Only: Drum 10490092. Containers called out by operator on A/V recording as near 4 liters are confirmed to be less than 4 liters.
JSIMONSON	04-MAY-14 11:03:53	Rework: Drum 10350049. Operator described the waste as cellulosics, but the RTR SME determined that the majority of the waste is Oil-Dri. Please review, (1) add a statement to the Result Comment to disregard Operator's description of the waste, Per RTR SME, Waste is primarily Oil-Dri between the 55 gallon drum and the 83 gallon drum; (2) delete Oil-Dri; and (3) update Remaining Contents of Container to 100% Other Inorganic Materials, as necessary.
JSIMONSON	04-MAY-14 11:14:29	Rework was performed completely and satisfactorily by a qualified operator.
JSIMONSON	04-MAY-14 11:18:23	Promoted to SPM.
DMARQUARDT	07-MAY-14 10:00:00	Reviewed and validated. Approve.
DMARQUARDT	07-MAY-14 10:00:00	Promote.

**********Batch E-Signature History**********

Approval ID	User ID	Signature Date	Comment
2744766	CSIMMONS	29-APR-2014 15:00:30	AK rework complete.
2748046	JSIMONSON	04-MAY-2014 10:33:38	Demoted to Operations for rework.
2748054	KHUGHES	04-MAY-2014 10:54:17	Completed rework
2748067	JSIMONSON	04-MAY-2014 11:18:23	Promoted to SPM.
2750244	DMARQUARDT	07-MAY-2014 10:00:00	Reviewed and validated. Approve.

***** End of Batch Report Coversheet Report *****

AMWTP
Advanced Mixed Waste Treatment Project

AMWTP
RTR Analysis Report

Date: 12-Sep-2014
Time: 13:32

Batch Id RTR14-00086 **Container Id** 10355920 **Analysis Id** 0000096632

Container Type C drum, 83 Gallon **Analysis Status** Pass

RTR Date 16-APR-2014 11:56 **Gross Weight** 183.015 Lbs **Net Weight** 40.015 Lbs
Equipment Z-213-106 **Waste Matrix Code** S5490 **IDC** SD-177 Pre-1980 INL-Exhumed SDA
Recording Id 2RTR14-00058 **Procedure Id** INST-OI-12 **Revision** Heterogeneous Debris
Is Test Pattern Resolution Ok? Yes **Start Side** A **Replicate** 53 **Approval Level** SPM
Audio Visual Ok? Yes **Operator** No **OIO** No
Result Comment JCUMMINGS

Contents of this drum is primarily plastic bagging.
AK does not concur with the recommended IDC UN-00B for container 10355920 because waste is SDA debris. Instead, AK recommends an IDC of SD-177. CHD 04/28/14
Rework: Corrected IDC per AK comment. cjs 04/29/14
AK concurs with the recommended IDC, SD-177, for container 10355920. No AKR or NCR is necessary. CHD 04/30/14

Package

IDC Correct Yes **Recommended IDC** SD-177 **Summary Category** S5000
Idc Change Reason Per AK

Rigid Liner Present? No **LinerType** NO LINER
Liner Punctured? N/A **Sharp Objects?** No
Liner Lid Present? No **Sharp Objects Are Protected?** Yes
Liner Lid Deformed? N/A **Layers Of Confinement** 2
Fill Factor 90
Bag Closure Method Twisted and Taped

Liquids

Liquid Present? No **Internal Container with Liquid** No
Internal Container with Liquid 0 pints **LA Candidate** No
Liquid Between Liner & Drum 0 pints **Containerized Liquid**
Total Liquid Amount 0 pints **Containerized Liquid Amt** 0 pints
Other Liquids 0 pints **Comment**
Prohibited Liquids Present No **Comment**

Contents-Drum or Box

	Value	Comment		Value	Comment
Lead?	No		Mercury Present?	No	
Wet Cell Batteries?	No		Explosives?	No	
Prohibited Compressed Gases?	No		PCBs Present?	No	
Aerosol Cans?	No		PCB Mass (lbs)	0	
Non-Mixed Hazardous Waste Present?	No		Sealed Containers Over 4L?	No	

Non-Radionuclide Pyrophoric Materials Present? No
Waste exhibiting the characteristics of Ignitability, Corrosivity or Reactivity Present? No
Wastes Incompatible with backfill, seal and panel closure materials, container and packaging materials,shipping container or other wastes? No
Impenetrable Dense Objects? No

Waste Material Items

Packaging Materials

Material Item	Quantity	Unit	Unit Wt(lbs)	Item Wt(lbs)
Drum plastic bag	1.000	EACH	1.000	1.000
55-GAL DRUM (17c)	1.000	EACH	59.000	59.000

Waste Items byWeight

Material Item	Quantity	Unit	Unit Wt(lbs)	Item Wt(lbs)
misc. metal	1.000	EACH	2.000	2.000
Plastic bag for waste	1.000	EACH	0.250	0.250
Respirator Cartridges	12.000	EACH	0.250	3.000

Batch Id RTR14-00086 **Container Id** 10355920 **Analysis Id** 0000096632

Waste Items by Volume

Material Item	Quantity	Unit	Unit Wt(lbs)	Item Wt(lbs)

Waste Parameters

Waste Parameter	Remaining Weight %	Actual Weight Lbs
Iron-based Metals/Alloys	0.000	2.000
Aluminum-based Metals/Alloys	0.000	2.100
Other metals	0.000	0.000
Other Inorganic Materials	0.000	0.000
Cellulosics	0.000	0.900
Rubber	0.000	0.000
Plastic (Waste Materials)	100.000	35.015
Inorganic matrix	0.000	0.000
Organic matrix	0.000	0.000
Soils/gravel	0.000	0.000
Steel (packaging materials)	0.000	142.000
Plastic (packaging materials)	0.000	1.000
Cellulosics Packaging	0.000	0.000
MLLW Waste	0.000	0.000

Analysis Esignature History

Esig Approval Id	User Id	Esignature Date	Comment
2745137	CHINKLE	30-APR-2014 05:12	Batch is promoted. chd 4/30/14
2744716	CSIMMONS	29-APR-2014 14:35	
2743939	CHINKLE	28-APR-2014 15:09	This batch is returned for rework. AK does not concur with the recommended IDC change for containers 10514677, 10514676, 10514674, 10514425, 10514419, 10513714, 10490226, 10490092, 10356098, 10355921, 10355920, 10355860, 10353586, 10351625, 10350049, 10350015 and 10229930. CHD 04/28/14
2733920	JCUMMINGS	16-APR-2014 11:56	

Batch Id RTR14-00086 **Container Id** 10350015 **Analysis Id** 0000096634

Container Type C drum, 83 Gallon **Analysis Status** Pass

RTR Date 16-APR-2014 12:15 **Gross Weight** 202.860 Lbs **Net Weight** 58.860 Lbs

Equipment Z-213-106 **Waste Matrix Code** S5490 **IDC** SD-177 Pre-1980 INL-Exhumed SDA

Recording Id 2RTR14-00058 **Procedure Id** INST-OI-12 **Revision** Heterogeneous Debris

Is Test Pattern Resolution Ok? Yes **Start Side** A **Replicate** 53 **Approval Level** SPM

Audio Visual Ok? Yes **Operator** No **OIO** No

Result Comment JCUMMINGS

Contents of this drum is primarily plastic bagging and PPE.
AK does not concur with the recommended IDC UN-00B for container 10350015 because waste is SDA debris. Instead, AK recommends an IDC of SD-177. CHD 04/28/14
Rework: Corrected IDC per AK comment. cjs 04/29/14
AK concurs with the recommended IDC, SD-177, for container 10350015. No AKR or NCR is necessary. CHD 04/30/14

Package

IDC Correct Yes **Recommended IDC** SD-177 **Summary Category** S5000

Idc Change Reason Per AK

Rigid Liner Present? No **LinerType** NO LINER

Liner Punctured? N/A **Sharp Objects?** No

Liner Lid Present? No **Sharp Objects Are Protected?** Yes

Liner Lid Deformed? N/A **Layers Of Confinement** 3

Fill Factor 70

Bag Closure Method Twisted and Taped

Liquids

Liquid Present? No **Internal Container with Liquid** No

Internal Container with Liquid 0 pints **LA Candidate** No

Liquid Between Liner & Drum 0 pints **Containerized Liquid**

Total Liquid Amount 0 pints **Containerized Liquid Amt** 0 pints

Other Liquids 0 pints **Comment**

Prohibited Liquids Present No **Comment**

Contents-Drum or Box

	Value	Comment		Value	Comment
Lead?	No		**Mercury Present?**	No	
Wet Cell Batteries?	No		**Explosives?**	No	
Prohibited Compressed Gases?	No		**PCBs Present?**	No	
Aerosol Cans?	No		**PCB Mass (lbs)**	0	
Non-Mixed Hazardous Waste Present?	No		**Sealed Containers Over 4L?**	No	

Non-Radionuclide Pyrophoric Materials Present? No

Waste exhibiting the characteristics of Ignitability, Corrosivity or Reactivity Present? No

Wastes Incompatible with backfill, seal and panel closure materials, container and packaging materials,shipping container or other wastes? No

Impenetrable Dense Objects? No

Waste Material Items

Packaging Materials

Material Item	Quantity	Unit	Unit Wt(lbs)	Item Wt(lbs)
Drum plastic bag	2.000	EACH	1.000	2.000
55-GAL DRUM (17c)	1.000	EACH	59.000	59.000

Waste Items byWeight

Material Item	Quantity	Unit	Unit Wt(lbs)	Item Wt(lbs)
Plastic bag for waste	1.000	EACH	0.250	0.250

Batch Id RTR14-00086 **Container Id** 10350015 **Analysis Id** 0000096634

Waste Items by Volume

Material Item	Quantity	Unit	Unit Wt(lbs)	Item Wt(lbs)

Waste Parameters

Waste Parameter	Remaining Weight %	Actual Weight Lbs
Iron-based Metals/Alloys	0.000	0.000
Aluminum-based Metals/Alloys	0.000	0.000
Other metals	0.000	0.000
Other Inorganic Materials	0.000	0.000
Cellulosics	0.000	0.000
Rubber	0.000	0.000
Plastic (Waste Materials)	100.000	58.860
Inorganic matrix	0.000	0.000
Organic matrix	0.000	0.000
Soils/gravel	0.000	0.000
Steel (packaging materials)	0.000	142.000
Plastic (packaging materials)	0.000	2.000
Cellulosics Packaging	0.000	0.000
MLLW Waste	0.000	0.000

Analysis Esignature History

Esig Approval Id	User Id	Esignature Date	Comment
2745142	CHINKLE	30-APR-2014 05:12	Batch is promoted. chd 4/30/14
2744695	CSIMMONS	29-APR-2014 14:22	
2743944	CHINKLE	28-APR-2014 15:09	This batch is returned for rework. AK does not concur with the recommended IDC change for containers 10514677, 10514676, 10514674, 10514425, 10514419, 10513714, 10490226, 10490092, 10356098, 10355921, 10355920, 10355860, 10353586, 10351625, 10350049, 10350015 and 10229930. CHD 04/28/14
2733932	JCUMMINGS	16-APR-2014 12:15	

Batch Id RTR14-00086 **Container Id** 10229930 **Analysis Id** 0000096635

Container Type C drum, 83 Gallon **Analysis Status** Pass

RTR Date 16-APR-2014 12:55 **Gross Weight** 643.860 Lbs **Net Weight** 499.860 Lbs

Equipment Z-213-106 **Waste Matrix Code** S3900 **IDC** BN-511 PCB Organic Homogeneous Solids

Recording Id 2RTR14-00058 **Procedure Id** INST-OI-12 **Revision** 53 **Approval Level** SPM

Is Test Pattern Resolution Ok? Yes **Start Side** A **Replicate** No **OIO** No

Audio Visual Ok? Yes **Operator** JCUMMINGS

Result Comment Contents of this drum is primarily sludge.
AK does not concur with the recommended IDC UN-00A for container 10229930 because waste is historically stored homogeneous solids waste with insufficient AK information to assign a legacy IDC. Instead, AK recommends an IDC of BN-511. CHD 04/28/14
Rework: Corrected IDC per AK comment. cjs 04/29/14
AK concurs with the recommended IDC, BN-511, for container 10229930. No AKR or NCR is necessary. CHD 04/30/14

Package

IDC Correct Yes **Recommended IDC** BN-511 **Summary Category** S3000

Idc Change Reason Per AK

Rigid Liner Present? No **LinerType** NO LINER

Liner Punctured? N/A **Sharp Objects?** No

Liner Lid Present? No **Sharp Objects Are Protected?** Yes

Liner Lid Deformed? N/A **Layers Of Confinement** 2

Fill Factor 95

Bag Closure Method Twisted and Taped

Liquids

Liquid Present? No **Internal Container with Liquid** No

Internal Container with Liquid 0 pints **LA Candidate** No

Liquid Between Liner & Drum 0 pints **Containerized Liquid**

Total Liquid Amount 0 pints **Containerized Liquid Amt** 0 pints

Other Liquids 0 pints **Comment**

Prohibited Liquids Present No **Comment**

Contents-Drum or Box

	Value	Comment		Value	Comment
Lead?	No		**Mercury Present?**	No	
Wet Cell Batteries?	No		**Explosives?**	No	
Prohibited Compressed Gases?	No		**PCBs Present?**	Yes - Acceptable	sludge
Aerosol Cans?	No		**PCB Mass (lbs)**	499.86	
Non-Mixed Hazardous Waste Present?	No		**Sealed Containers Over 4L?**	No	

Non-Radionuclide Pyrophoric Materials Present? No

Waste exhibiting the characteristics of Ignitability, Corrosivity or Reactivity Present? No

Wastes Incompatible with backfill, seal and panel closure materials, container and packaging materials,shipping container or other wastes? No

Impenetrable Dense Objects? Yes - Unacceptable sludge

Waste Material Items

Packaging Materials

Material Item	Quantity	Unit	Unit Wt(lbs)	Item Wt(lbs)
Drum plastic bag	2.000	EACH	1.000	2.000
55-GAL DRUM (17c)	1.000	EACH	59.000	59.000

Waste Items byWeight

Material Item	Quantity	Unit	Unit Wt(lbs)	Item Wt(lbs)

Waste Items by Volume

Material Item	Quantity	Unit	Unit Wt(lbs)	Item Wt(lbs)

Batch Id RTR14-00086 **Container Id** 10229930 **Analysis Id** 0000096635

Waste Parameters

Waste Parameter	Remaining Weight %	Actual Weight Lbs
Iron-based Metals/Alloys	0.000	0.000
Aluminum-based Metals/Alloys	0.000	0.000
Other metals	0.000	0.000
Other Inorganic Materials	0.000	0.000
Cellulosics	0.000	0.000
Rubber	0.000	0.000
Plastic (Waste Materials)	0.000	0.000
Inorganic matrix	0.000	0.000
Organic matrix	100.000	499.860
Soils/gravel	0.000	0.000
Steel (packaging materials)	0.000	142.000
Plastic (packaging materials)	0.000	2.000
Cellulosics Packaging	0.000	0.000
MLLW Waste	0.000	0.000

Analysis Esignature History

Esig Approval Id	User Id	Esignature Date	Comment
2745143	CHINKLE	30-APR-2014 05:12	Batch is promoted. chd 4/30/14
2744693	CSIMMONS	29-APR-2014 14:20	
2743945	CHINKLE	28-APR-2014 15:09	This batch is returned for rework. AK does not concur with the recommended IDC change for containers 10514677, 10514676, 10514674, 10514425, 10514419, 10513714, 10490226, 10490092, 10356098, 10355921, 10355920, 10355860, 10353586, 10351625, 10350049, 10350015 and 10229930. CHD 04/28/14
2733952	JCUMMINGS	16-APR-2014 12:55	

Batch Id RTR14-00086 **Container Id** 10355920 **Analysis Id** 0000096637

Container Type C drum, 83 Gallon **Analysis Status** Pass

RTR Date 16-APR-2014 13:43 **Gross Weight** 183.015 Lbs **Net Weight** 40.015 Lbs

Equipment Z-213-106 **Waste Matrix Code** S5490 **IDC** SD-177 Pre-1980 INL-Exhumed SDA

Recording Id 2RTR14-00058 **Procedure Id** INST-OI-12 **Revision** Heterogeneous Debris

Is Test Pattern Resolution Ok? Yes **Start Side** A **Replicate** 53 **Approval Level** SPM

Audio Visual Ok? Yes **Operator** No **OIO** Yes

Result Comment DMOORE

Remainng waste appears to be paper, rags, and PPE.

Package

IDC Correct Yes **Recommended IDC** **Summary Category** S5000

Idc Change Reason

Rigid Liner Present? No **LinerType** NO LINER

Liner Punctured? N/A **Sharp Objects?** No

Liner Lid Present? No **Sharp Objects Are Protected?** Yes

Liner Lid Deformed? N/A **Layers Of Confinement** 2

Fill Factor 95

Bag Closure Method Twisted and Taped

Liquids

Liquid Present? No **Internal Container with Liquid** No

Internal Container with Liquid 0 pints **LA Candidate** No

Liquid Between Liner & Drum 0 pints **Containerized Liquid**

Total Liquid Amount 0 pints **Containerized Liquid Amt** 0 pints

Other Liquids 0 pints **Comment**

Prohibited Liquids Present No **Comment**

Contents-Drum or Box

	Value	Comment		Value	Comment
Lead?	No		**Mercury Present?**	No	
Wet Cell Batteries?	No		**Explosives?**	No	
Prohibited Compressed Gases?	No		**PCBs Present?**	No	
Aerosol Cans?	No		**PCB Mass (lbs)**	0	
Non-Mixed Hazardous Waste Present?	No		**Sealed Containers Over 4L?**	No	

Non-Radionuclide Pyrophoric Materials Present? No

Waste exhibiting the characteristics of Ignitability, Corrosivity or Reactivity Present? No

Wastes Incompatible with backfill, seal and panel closure materials, container and packaging materials,shipping container or other wastes? No

Impenetrable Dense Objects? No

Waste Material Items

Packaging Materials

Material Item	Quantity	Unit	Unit Wt(lbs)	Item Wt(lbs)
Drum plastic bag	1.000	EACH	1.000	1.000
55-GAL DRUM (17c)	1.000	EACH	59.000	59.000

Waste Items byWeight

Material Item	Quantity	Unit	Unit Wt(lbs)	Item Wt(lbs)
plastic bagging, sheeting	1.000	EACH	6.000	6.000
RAD grates, misc metals	1.000	EACH	1.000	1.000
respirator mask	1.000	EACH	2.000	2.000
Plastic bag for waste	1.000	EACH	0.250	0.250
Respirator Cartridges	12.000	EACH	0.250	3.000

Batch Id RTR14-00086 **Container Id** 10355920 **Analysis Id** 0000096637

Waste Items by Volume

Material Item	Quantity	Unit	Unit Wt(lbs)	Item Wt(lbs)
Oil-Dri (Inside 55 gal drum)	3.000	PINTS	0.420	1.260

Waste Parameters

Waste Parameter	Remaining Weight %	Actual Weight Lbs
Iron-based Metals/Alloys	0.000	1.000
Aluminum-based Metals/Alloys	0.000	2.100
Other metals	0.000	0.000
Other Inorganic Materials	0.000	1.260
Cellulosics	100.000	27.405
Rubber	0.000	2.000
Plastic (Waste Materials)	0.000	6.250
Inorganic matrix	0.000	0.000
Organic matrix	0.000	0.000
Soils/gravel	0.000	0.000
Steel (packaging materials)	0.000	142.000
Plastic (packaging materials)	0.000	1.000
Cellulosics Packaging	0.000	0.000
MLLW Waste	0.000	0.000

RTR Independent Observation

Obsolete	Performed	User Name	Checklist	Answer
No	02-MAY-2014 08:48	JSIMONSON	1.Was an independent observation performed?	Yes
			2.Were all items on the recording media identified correctly in WTS?	Yes
			3.Do you agree with the operator?	No

Comment On 16-Apr-2014 a qualified operator performed the OIO analysis for batch RTR14--00086 on container 10355920. There were differences in The Fill Factor and the Waste Items by Weight between the Original analysis and the OIO analysis. These differences do not affect the original disposition of the drum or the DQOs. I agree with the Original Operator. No rework will be performed on the OIO analysis. Original Operator called the waste Plastic (Waste Materials) but the OIO Operator called the waste Cellulosics. This is not considered a significant difference since both waste parameters are allowed in IDC SD-177.

Independent Observation Esignature History

Esig Approval Id	User Id	Esignature Date	Comment
2746682	JSIMONSON	02-MAY-2014 08:48	ITR OIO Comparison complete.

Analysis Esignature History

Esig Approval Id	User Id	Esignature Date	Comment
2733993	DMOORE	16-APR-2014 13:43	

Batch Id RTR14-00086 **Container Id** 10350015 **Analysis Id** 0000096638

Container Type C drum, 83 Gallon **Analysis Status** Pass

RTR Date 16-APR-2014 14:16 **Gross Weight** 202.860 Lbs **Net Weight** 58.860 Lbs

Equipment Z-213-106 **Waste Matrix Code** S5490 **IDC** SD-177 Pre-1980 INL-Exhumed SDA

Recording Id 2RTR14-00058 **Procedure Id** INST-OI-12 **Revision** Heterogeneous Debris

Is Test Pattern Resolution Ok? Yes **Start Side** A **Replicate** 53 **Approval Level** SPM

Audio Visual Ok? Yes **Operator** Yes **OIO** No

Result Comment DMOORE

Remaining waste appears to be plastic sheeting, bagging, and poly bottle.

Package

IDC Correct Yes **Recommended IDC** **Summary Category** S5000

Idc Change Reason

Rigid Liner Present? No **LinerType** NO LINER

Liner Punctured? N/A **Sharp Objects?** No

Liner Lid Present? No **Sharp Objects Are Protected?** Yes

Liner Lid Deformed? N/A **Layers Of Confinement** 3

Fill Factor 90

Bag Closure Method Twisted and Taped

Liquids

Liquid Present? No **Internal Container with Liquid** No

Internal Container with Liquid 0 pints **LA Candidate** No

Liquid Between Liner & Drum 0 pints **Containerized Liquid**

Total Liquid Amount 0 pints **Containerized Liquid Amt** 0 pints

Other Liquids 0 pints **Comment**

Prohibited Liquids Present No **Comment**

Contents-Drum or Box

	Value	Comment		Value	Comment
Lead?	No		**Mercury Present?**	No	
Wet Cell Batteries?	No		**Explosives?**	No	
Prohibited Compressed Gases?	No		**PCBs Present?**	No	
Aerosol Cans?	No		**PCB Mass (lbs)**	0	
Non-Mixed Hazardous Waste Present?	No		**Sealed Containers Over 4L?**	No	

Non-Radionuclide Pyrophoric Materials Present? No

Waste exhibiting the characteristics of Ignitability, Corrosivity or Reactivity Present? No

Wastes Incompatible with backfill, seal and panel closure materials, container and packaging materials,shipping container or other wastes? No

Impenetrable Dense Objects? No

Waste Material Items

Packaging Materials

Material Item	Quantity	Unit	Unit Wt(lbs)	Item Wt(lbs)
Drum plastic bag	2.000	EACH	1.000	2.000
55-GAL DRUM (17c)	1.000	EACH	59.000	59.000

Waste Items byWeight

Material Item	Quantity	Unit	Unit Wt(lbs)	Item Wt(lbs)
paper, rags, PPE	1.000	EACH	15.000	15.000
Plastic bag for waste	1.000	EACH	0.250	0.250
Poly bottles (1 gal)	1.000	EACH	1.000	1.000

Waste Items by Volume

Material Item	Quantity	Unit	Unit Wt(lbs)	Item Wt(lbs)
Oil-Dri (Inside 55 gal drum)	3.000	PINTS	0.420	1.260

Batch Id RTR14-00086 **Container Id** 10350015 **Analysis Id** 0000096638

Waste Parameters

Waste Parameter	Remaining Weight %	Actual Weight Lbs
Iron-based Metals/Alloys	0.000	0.000
Aluminum-based Metals/Alloys	0.000	0.000
Other metals	0.000	0.000
Other Inorganic Materials	0.000	1.260
Cellulosics	0.000	15.000
Rubber	0.000	0.000
Plastic (Waste Materials)	100.000	42.600
Inorganic matrix	0.000	0.000
Organic matrix	0.000	0.000
Soils/gravel	0.000	0.000
Steel (packaging materials)	0.000	142.000
Plastic (packaging materials)	0.000	2.000
Cellulosics Packaging	0.000	0.000
MLLW Waste	0.000	0.000

Analysis Esignature History

Esig Approval Id	User Id	Esignature Date	Comment
2734022	DMOORE	16-APR-2014 14:16	

AMWTP
Advanced Mixed Waste Treatment Project

AMWTP
RTR Analysis Report

Date: 12-Sep-2014
Time: 13:32

Batch Id RTR14-00086 **Container Id** 10356098 **Analysis Id** 0000096639

Container Type C drum, 83 Gallon **Analysis Status** Pass

RTR Date 16-APR-2014 14:45 **Gross Weight** 171.990 Lbs **Net Weight** 29.990 Lbs

Equipment Z-213-106 **Waste Matrix Code** S5490 **IDC** SD-177 Pre-1980 INL-Exhumed SDA

Recording Id 2RTR14-00058 **Procedure Id** INST-OI-12 **Revision** Heterogeneous Debris

Is Test Pattern Resolution Ok? Yes **Start Side** A **Replicate** 53 **Approval Level** SPM

Audio Visual Ok? Yes **Operator** No **OIO** No

Result Comment DMOORE

Remaining waste appears to be cardboard, paper, filter media, and rags. .
AK does not concur with the recommended IDC UN-00B for container 10356098 because waste is SDA debris. Instead, AK recommends an IDC of SD-177. CHD 04/28/14
Rework: Corrected IDC per AK comment. cjs 04/29/14
AK concurs with the recommended IDC, SD-177, for container 10356098. No AKR or NCR is necessary. CHD 04/30/14

Package

IDC Correct Yes **Recommended IDC** SD-177 **Summary Category** S5000

Idc Change Reason Per AK

Rigid Liner Present? No **LinerType** NO LINER

Liner Punctured? N/A **Sharp Objects?** No

Liner Lid Present? No **Sharp Objects Are Protected?** Yes

Liner Lid Deformed? N/A **Layers Of Confinement** 1

Fill Factor 95

Bag Closure Method Twisted and Taped

Liquids

Liquid Present? No **Internal Container with Liquid** No

Internal Container with Liquid 0 pints **LA Candidate** No

Liquid Between Liner & Drum 0 pints **Containerized Liquid**

Total Liquid Amount 0 pints **Containerized Liquid Amt** 0 pints

Other Liquids 0 pints **Comment**

Prohibited Liquids Present No **Comment**

Contents-Drum or Box

	Value	Comment		Value	Comment
Lead?	Yes, Acceptable	Lead tape, TID	**Mercury Present?**	No	
Wet Cell Batteries?	No		**Explosives?**	No	
Prohibited Compressed Gases?	No		**PCBs Present?**	No	
Aerosol Cans?	No		**PCB Mass (lbs)**	0	
Non-Mixed Hazardous Waste Present?	No		**Sealed Containers Over 4L?**	No	

Non-Radionuclide Pyrophoric Materials Present? No

Waste exhibiting the characteristics of Ignitability, Corrosivity or Reactivity Present? No

Wastes Incompatible with backfill, seal and panel closure materials, container and packaging materials,shipping container or other wastes? No

Impenetrable Dense Objects? No

Waste Material Items

Packaging Materials

Material Item	Quantity	Unit	Unit Wt(lbs)	Item Wt(lbs)
55-GAL DRUM (17c)	1.000	EACH	59.000	59.000

Batch Id RTR14-00086 **Container Id** 10356098 **Analysis Id** 0000096639

Waste Items byWeight

Material Item	Quantity	Unit	Unit Wt(lbs)	Item Wt(lbs)
RAD grates, misc metals	1.000	EACH	2.000	2.000
plastic sheeting, bagging	1.000	EACH	5.000	5.000
respirator mask with cartridges	1.000	EACH	2.250	2.250
lead tape, TID	1.000	EACH	0.250	0.250
Plastic bag for waste	1.000	EACH	0.250	0.250
Metal can	2.000	EACH	0.500	1.000
D-cell Battery	2.000	EACH	0.250	0.500

Waste Items by Volume

Material Item	Quantity	Unit	Unit Wt(lbs)	Item Wt(lbs)

Waste Parameters

Waste Parameter	Remaining Weight %	Actual Weight Lbs
Iron-based Metals/Alloys	0.000	3.000
Aluminum-based Metals/Alloys	0.000	0.338
Other metals	0.000	0.750
Other Inorganic Materials	0.000	0.000
Cellulosics	100.000	18.853
Rubber	0.000	1.800
Plastic (Waste Materials)	0.000	5.250
Inorganic matrix	0.000	0.000
Organic matrix	0.000	0.000
Soils/gravel	0.000	0.000
Steel (packaging materials)	0.000	142.000
Plastic (packaging materials)	0.000	0.000
Cellulosics Packaging	0.000	0.000
MLLW Waste	0.000	0.000

Analysis Esignature History

Esig Approval Id	User Id	Esignature Date	Comment
2745135	CHINKLE	30-APR-2014 05:12	Batch is promoted. chd 4/30/14
2744725	CSIMMONS	29-APR-2014 14:39	
2743937	CHINKLE	28-APR-2014 15:09	This batch is returned for rework. AK does not concur with the recommended IDC change for containers 10514677, 10514676, 10514674, 10514425, 10514419, 10513714, 10490226, 10490092, 10356098, 10355921, 10355920, 10355860, 10353586, 10351625, 10350049, 10350015 and 10229930. CHD 04/28/14
2734056	DMOORE	16-APR-2014 14:45	

Batch Id RTR14-00086 **Container Id** 10479527 **Analysis Id** 0000096641

Container Type C drum, 83 Gallon **Analysis Status** Pass

RTR Date 16-APR-2014 15:40 **Gross Weight** 222.705 Lbs **Net Weight** 78.705 Lbs

Equipment Z-213-106 **Waste Matrix Code** S5490 **IDC** BN-524 Pad 1 Cells 1 and 2 Non-PCB Debris

Recording Id 2RTR14-00058 **Procedure Id** INST-OI-12 **Revision** 53 **Approval Level** SPM

Is Test Pattern Resolution Ok? Yes **Start Side** A **Replicate** No **OIO** No

Audio Visual Ok? Yes **Operator** DMOORE

Result Comment Remaining waste appears to be plastic PVC pipe pieces, tape, sheeting, and bagging.
AK concurs with the recommended IDC, BN-524, for container 10479527. No AKR or NCR is necessary. CHD 04/28/14

Package

IDC Correct Yes **Recommended IDC** BN-524 **Summary Category** S5000

Idc Change Reason Waste appears to be plastic materials, rags, misc metals

Rigid Liner Present? No **LinerType** NO LINER

Liner Punctured? N/A **Sharp Objects?** No

Liner Lid Present? No **Sharp Objects Are Protected?** Yes

Liner Lid Deformed? N/A **Layers Of Confinement** 3

Fill Factor 95

Bag Closure Method Twisted and Taped

Liquids

Liquid Present? No **Internal Container with Liquid** No

Internal Container with Liquid 0 pints **LA Candidate** No

Liquid Between Liner & Drum 0 pints **Containerized Liquid**

Total Liquid Amount 0 pints **Containerized Liquid Amt** 0 pints

Other Liquids 0 pints **Comment**

Prohibited Liquids Present No **Comment**

Contents-Drum or Box

	Value	Comment		Value	Comment
Lead?	No		**Mercury Present?**	No	
Wet Cell Batteries?	No		**Explosives?**	No	
Prohibited Compressed Gases?	No		**PCBs Present?**	No	
Aerosol Cans?	No		**PCB Mass (lbs)**	0	
Non-Mixed Hazardous Waste Present?	No		**Sealed Containers Over 4L?**	No	

Non-Radionuclide Pyrophoric Materials Present? No

Waste exhibiting the characteristics of Ignitability, Corrosivity or Reactivity Present? No

Wastes Incompatible with backfill, seal and panel closure materials, container and packaging materials,shipping container or other wastes? No

Impenetrable Dense Objects? No

Waste Material Items

Packaging Materials

Material Item	Quantity	Unit	Unit Wt(lbs)	Item Wt(lbs)
Drum plastic bag	2.000	EACH	1.000	2.000
55-GAL DRUM (17c)	1.000	EACH	59.000	59.000

Waste Items byWeight

Material Item	Quantity	Unit	Unit Wt(lbs)	Item Wt(lbs)
cardboard, rags	1.000	EACH	6.000	6.000
open 30 gallon drum, crushed cans, misc metals	1.000	EACH	30.000	30.000
Plastic bag for waste	1.000	EACH	0.250	0.250

Waste Items by Volume

Material Item	Quantity	Unit	Unit Wt(lbs)	Item Wt(lbs)
Oil-Dri (Inside 55 gal drum)	38.000	PINTS	0.420	15.960

Batch Id RTR14-00086 **Container Id** 10479527 **Analysis Id** 0000096641

Waste Parameters

Waste Parameter	Remaining Weight %	Actual Weight Lbs
Iron-based Metals/Alloys	0.000	30.000
Aluminum-based Metals/Alloys	0.000	0.000
Other metals	0.000	0.000
Other Inorganic Materials	0.000	15.960
Cellulosics	0.000	6.000
Rubber	0.000	0.000
Plastic (Waste Materials)	100.000	26.745
Inorganic matrix	0.000	0.000
Organic matrix	0.000	0.000
Soils/gravel	0.000	0.000
Steel (packaging materials)	0.000	142.000
Plastic (packaging materials)	0.000	2.000
Cellulosics Packaging	0.000	0.000
MLLW Waste	0.000	0.000

Analysis Esignature History

Esig Approval Id	User Id	Esignature Date	Comment
2743936	CHINKLE	28-APR-2014 15:09	This batch is returned for rework. AK does not concur with the recommended IDC change for containers 10514677, 10514676, 10514674, 10514425, 10514419, 10513714, 10490226, 10490092, 10356098, 10355921, 10355920, 10355860, 10353586, 10351625, 10350049, 10350015 and 10229930. CHD 04/28/14
2734083	DMOORE	16-APR-2014 15:40	

Batch Id RTR14-00086 **Container Id** 10355921 **Analysis Id** 0000096643

Container Type C drum, 83 Gallon **Analysis Status** Pass

RTR Date 16-APR-2014 16:12 **Gross Weight** 218.295 Lbs **Net Weight** 76.295 Lbs

Equipment Z-213-106 **Waste Matrix Code** S5490 **IDC** SD-177 Pre-1980 INL-Exhumed SDA

Recording Id 2RTR14-00058 **Procedure Id** INST-OI-12 **Revision** Heterogeneous Debris

Is Test Pattern Resolution Ok? Yes **Start Side** A **Replicate** 53 **Approval Level** SPM

Audio Visual Ok? Yes **Operator** No **OIO** No

Result Comment DMOORE

Remaining waste appears to be paper, cardboard, and rags.
AK does not concur with the recommended IDC UN-00B for container 10355921 because waste is SDA debris. Instead, AK recommends an IDC of SD-177. CHD 04/28/14
Rework: Corrected IDC per AK comment. cjs 04/29/14
AK concurs with the recommended IDC, SD-177, for container 10355921. No AKR or NCR is necessary. CHD 04/30/14

Package

IDC Correct Yes **Recommended IDC** SD-177 **Summary Category** S5000

Idc Change Reason Per AK

Rigid Liner Present? No **LinerType** NO LINER

Liner Punctured? N/A **Sharp Objects?** No

Liner Lid Present? No **Sharp Objects Are Protected?** Yes

Liner Lid Deformed? N/A **Layers Of Confinement** 0

Fill Factor 80

Bag Closure Method No Bags

Liquids

Liquid Present? Yes **Internal Container with Liquid** Yes

Internal Container with Liquid .09 pints **LA Candidate** No

Liquid Between Liner & Drum 0 pints **Containerized Liquid**

Total Liquid Amount .15 pints **Containerized Liquid Amt** 0 pints

Other Liquids .06 pints **Comment** Liquid is in the middle of 55 gallon drum in a bottle, and near bottom.

Prohibited Liquids Present No **Comment**

Contents-Drum or Box

	Value	Comment		Value	Comment
Lead?	No		**Mercury Present?**	No	
Wet Cell Batteries?	No		**Explosives?**	No	
Prohibited Compressed Gases?	No		**PCBs Present?**	No	
Aerosol Cans?	No		**PCB Mass (lbs)**	0	
Non-Mixed Hazardous Waste Present?	No		**Sealed Containers Over 4L?**	No	

Non-Radionuclide Pyrophoric Materials Present? No

Waste exhibiting the characteristics of Ignitability, Corrosivity or Reactivity Present? No

Wastes Incompatible with backfill, seal and panel closure materials, container and packaging materials,shipping container or other wastes? No

Impenetrable Dense Objects? No

Waste Material Items

Packaging Materials

Material Item	Quantity	Unit	Unit Wt(lbs)	Item Wt(lbs)
55-GAL DRUM (17c)	1.000	EACH	59.000	59.000

Waste Items byWeight

Material Item	Quantity	Unit	Unit Wt(lbs)	Item Wt(lbs)
plastic sheeting, bagging, bottles	1.000	EACH	20.000	20.000
12 inch rings, conduit, cable wire, misc metals	1.000	EACH	6.000	6.000
D-cell Battery	4.000	EACH	0.250	1.000

Batch Id RTR14-00086 **Container Id** 10355921 **Analysis Id** 0000096643

Waste Items by Volume

Material Item	Quantity	Unit	Unit Wt(lbs)	Item Wt(lbs)
Oil-Dri (Inside 55 gal drum)	5.000	PINTS	0.420	2.100
Liquids for Other Inorganics	0.150	PINTS	1.000	0.150

Waste Parameters

Waste Parameter	Remaining Weight %	Actual Weight Lbs
Iron-based Metals/Alloys	0.000	6.000
Aluminum-based Metals/Alloys	0.000	0.000
Other metals	0.000	1.000
Other Inorganic Materials	0.000	2.250
Cellulosics	100.000	47.045
Rubber	0.000	0.000
Plastic (Waste Materials)	0.000	20.000
Inorganic matrix	0.000	0.000
Organic matrix	0.000	0.000
Soils/gravel	0.000	0.000
Steel (packaging materials)	0.000	142.000
Plastic (packaging materials)	0.000	0.000
Cellulosics Packaging	0.000	0.000
MLLW Waste	0.000	0.000

Analysis Esignature History

Esig Approval Id	User Id	Esignature Date	Comment
2745136	CHINKLE	30-APR-2014 05:12	Batch is promoted. chd 4/30/14
2744721	CSIMMONS	29-APR-2014 14:37	
2743938	CHINKLE	28-APR-2014 15:09	This batch is returned for rework. AK does not concur with the recommended IDC change for containers 10514677, 10514676, 10514674, 10514425, 10514419, 10513714, 10490226, 10490092, 10356098, 10355921, 10355920, 10355860, 10353586, 10351625, 10350049, 10350015 and 10229930. CHD 04/28/14
2734108	DMOORE	16-APR-2014 16:12	

Batch Id RTR14-00086 **Container Id** 10350139 **Analysis Id** 0000096650

Container Type C drum, 83 Gallon **Analysis Status** Pass

RTR Date 17-APR-2014 08:55 **Gross Weight** 227.115 Lbs **Net Weight** 83.115 Lbs

Equipment Z-213-106 **Waste Matrix Code** S5490 **IDC** RF-760 RFP Debris

Recording Id 2RTR14-00058 **Procedure Id** INST-OI-12 **Revision** 53 **Approval Level** SPM

Is Test Pattern Resolution Ok? Yes **Start Side** A **Replicate** No **OIO** No

Audio Visual Ok? Yes **Operator** CTIEGS

Result Comment Remaining waste appears to contain glass labware, bottles, vials, beckers.

Package

IDC Correct Yes **Recommended IDC** **Summary Category** S5000

Idc Change Reason

Rigid Liner Present? No **LinerType** NO LINER

Liner Punctured? N/A **Sharp Objects?** No

Liner Lid Present? No **Sharp Objects Are Protected?** Yes

Liner Lid Deformed? N/A **Layers Of Confinement** 2

Fill Factor 85

Bag Closure Method Twisted and Taped

Liquids

Liquid Present? No **Internal Container with Liquid** No

Internal Container with Liquid 0 pints **LA Candidate** No

Liquid Between Liner & Drum 0 pints **Containerized Liquid**

Total Liquid Amount 0 pints **Containerized Liquid Amt** 0 pints

Other Liquids 0 pints **Comment**

Prohibited Liquids Present No **Comment**

Contents-Drum or Box

	Value	Comment		Value	Comment
Lead?	No		**Mercury Present?**	No	
Wet Cell Batteries?	No		**Explosives?**	No	
Prohibited Compressed Gases?	No		**PCBs Present?**	No	
Aerosol Cans?	No		**PCB Mass (lbs)**	0	
Non-Mixed Hazardous Waste Present?	No		**Sealed Containers Over 4L?**	No	

Non-Radionuclide Pyrophoric Materials Present? No

Waste exhibiting the characteristics of Ignitability, Corrosivity or Reactivity Present? No

Wastes Incompatible with backfill, seal and panel closure materials, container and packaging materials,shipping container or other wastes? No

Impenetrable Dense Objects? No

Waste Material Items

Packaging Materials

Material Item	Quantity	Unit	Unit Wt(lbs)	Item Wt(lbs)
Drum plastic bag	2.000	EACH	1.000	2.000
55-GAL DRUM (17c)	1.000	EACH	59.000	59.000

Waste Items byWeight

Material Item	Quantity	Unit	Unit Wt(lbs)	Item Wt(lbs)
Cardboard liner	1.000	EACH	4.000	4.000

Waste Items by Volume

Material Item	Quantity	Unit	Unit Wt(lbs)	Item Wt(lbs)
Oil-Dri (Inside 55 gal drum)	12.000	PINTS	0.420	5.040

Batch Id RTR14-00086 **Container Id** 10350139 **Analysis Id** 0000096650

Waste Parameters

Waste Parameter	Remaining Weight %	Actual Weight Lbs
Iron-based Metals/Alloys	0.000	0.000
Aluminum-based Metals/Alloys	0.000	0.000
Other metals	0.000	0.000
Other Inorganic Materials	100.000	79.115
Cellulosics	0.000	4.000
Rubber	0.000	0.000
Plastic (Waste Materials)	0.000	0.000
Inorganic matrix	0.000	0.000
Organic matrix	0.000	0.000
Soils/gravel	0.000	0.000
Steel (packaging materials)	0.000	142.000
Plastic (packaging materials)	0.000	2.000
Cellulosics Packaging	0.000	0.000
MLLW Waste	0.000	0.000

Analysis Esignature History

Esig Approval Id	User Id	Esignature Date	Comment
2734601	CTIEGS	17-APR-2014 08:55	

Batch Id RTR14-00086 **Container Id** 10353586 **Analysis Id** 0000096652

Container Type C drum, 83 Gallon **Analysis Status** Pass

RTR Date 17-APR-2014 09:19 **Gross Weight** 317.520 Lbs **Net Weight** 174.520 Lbs

Equipment Z-213-106 **Waste Matrix Code** S5490 **IDC** SD-177 Pre-1980 INL-Exhumed SDA

Recording Id 2RTR14-00058 **Procedure Id** INST-OI-12 **Revision** Heterogeneous Debris

Is Test Pattern Resolution Ok? Yes **Start Side** A **Replicate** 53 **Approval Level** SPM

Audio Visual Ok? Yes **Operator** No **OIO** No

Result Comment CTIEGS

Remaining waste appears to contain ful-flo filters.
AK does not concur with the recommended IDC UN-00B for container 10353586 because waste is SDA debris identified by RTR SME as plastic ful-flo filters. Instead, AK recommends an IDC of SD-177. CHD 04/28/14
Rework: Corrected IDC per AK comment. cjs 04/29/14
AK concurs with the recommended IDC, SD-177, for container 10353586. No AKR or NCR is necessary. CHD 04/30/14

Package

IDC Correct Yes **Recommended IDC** SD-177 **Summary Category** S5000

Idc Change Reason Per AK

Rigid Liner Present? No **LinerType** NO LINER

Liner Punctured? N/A **Sharp Objects?** No

Liner Lid Present? No **Sharp Objects Are Protected?** Yes

Liner Lid Deformed? N/A **Layers Of Confinement** 2

Fill Factor 70

Bag Closure Method Twisted and Taped

Liquids

Liquid Present? Yes **Internal Container with Liquid** No

Internal Container with Liquid 0 pints **LA Candidate** No

Liquid Between Liner & Drum 0 pints **Containerized Liquid**

Total Liquid Amount 5.5 pints **Containerized Liquid Amt** 0 pints

Other Liquids 5.5 pints **Comment** liquid in bagging at last chine and bottom of waste in bagging pockets.

Prohibited Liquids Present Yes **Comment** >1% by volume liquid.

Contents-Drum or Box

	Value	Comment
Lead?	Yes, Acceptable	leaded rubber gloves
Wet Cell Batteries?	No	
Prohibited Compressed Gases?	No	
Aerosol Cans?	No	
Non-Mixed Hazardous Waste Present?	No	

	Value	Comment
Mercury Present?	No	
Explosives?	No	
PCBs Present?	No	
PCB Mass (lbs)	0	
Sealed Containers Over 4L?	No	

Non-Radionuclide Pyrophoric Materials Present? No

Waste exhibiting the characteristics of Ignitability, Corrosivity or Reactivity Present? No

Wastes Incompatible with backfill, seal and panel closure materials, container and packaging materials,shipping container or other wastes? No

Impenetrable Dense Objects? Yes - Unacceptable impenetrable area at bottom of waste.

Waste Material Items

Packaging Materials

Material Item	Quantity	Unit	Unit Wt(lbs)	Item Wt(lbs)
Drum plastic bag	1.000	EACH	1.000	1.000
55-GAL DRUM (17c)	1.000	EACH	59.000	59.000

Batch Id RTR14-00086 **Container Id** 10353586 **Analysis Id** 0000096652

Waste Items byWeight

Material Item	Quantity	Unit	Unit Wt(lbs)	Item Wt(lbs)
plastic bagging	1.000	EACH	10.000	10.000
bagging around 55 gal	1.000	EACH	8.000	8.000
Plastic bag for waste	1.000	EACH	0.250	0.250
Leaded rubber glove	2.000	EACH	5.500	11.000

Waste Items by Volume

Material Item	Quantity	Unit	Unit Wt(lbs)	Item Wt(lbs)
Liquids for Other Inorganics	5.500	PINTS	1.000	5.500

Waste Parameters

Waste Parameter	Remaining Weight %	Actual Weight Lbs
Iron-based Metals/Alloys	0.000	0.000
Aluminum-based Metals/Alloys	0.000	0.000
Other metals	0.000	0.000
Other Inorganic Materials	100.000	145.270
Cellulosics	0.000	0.000
Rubber	0.000	11.000
Plastic (Waste Materials)	0.000	18.250
Inorganic matrix	0.000	0.000
Organic matrix	0.000	0.000
Soils/gravel	0.000	0.000
Steel (packaging materials)	0.000	142.000
Plastic (packaging materials)	0.000	1.000
Cellulosics Packaging	0.000	0.000
MLLW Waste	0.000	0.000

Analysis Esignature History

Esig Approval Id	User Id	Esignature Date	Comment
2745139	CHINKLE	30-APR-2014 05:12	Batch is promoted. chd 4/30/14
2744709	CSIMMONS	29-APR-2014 14:31	
2743941	CHINKLE	28-APR-2014 15:09	This batch is returned for rework. AK does not concur with the recommended IDC change for containers 10514677, 10514676, 10514674, 10514425, 10514419, 10513714, 10490226, 10490092, 10356098, 10355921, 10355920, 10355860, 10353586, 10351625, 10350049, 10350015 and 10229930. CHD 04/28/14
2734617	CTIEGS	17-APR-2014 09:19	

Batch Id RTR14-00086 **Container Id** 10355860 **Analysis Id** 0000096654

Container Type C drum, 83 Gallon **Analysis Status** Pass

RTR Date 17-APR-2014 10:13 **Gross Weight** 449.820 Lbs **Net Weight** 366.820 Lbs

Equipment Z-213-106 **Waste Matrix Code** S5490 **IDC** SD-177 Pre-1980 INL-Exhumed SDA

Recording Id 2RTR14-00058 **Procedure Id** INST-OI-12 **Revision** Heterogeneous Debris

Is Test Pattern Resolution Ok? Yes **Start Side** A **Replicate** 53 **Approval Level** SPM

Audio Visual Ok? Yes **Operator** No **OIO** No

Result Comment CTIEGS

Remaining waste appears to contain soil, the 55 gal drum is not functioning as designed.
AK does not concur with the recommended IDC change from UN-00B to UN-00C for container 10355860 because RTR SME review indicates waste is primarily debris. Instead, AK recommends an IDC of SD-177. CHD 04/28/14
Rework: Corrected IDC per AK comment. cjs 04/29/14
AK concurs with the recommended IDC, SD-177, for container 10355860. No AKR or NCR is necessary. CHD 04/30/14
(rework) Disregard operator's description of the waste, Per RTR SME waste is primarily debris in the form of concrete pieces. Entered soil into Waste Parameters, update Remaining Contents of Container. KH 04MAY14

Package

IDC Correct Yes **Recommended IDC** SD-177 **Summary Category** S5000

Idc Change Reason Per AK

Rigid Liner Present? No **LinerType** NO LINER

Liner Punctured? N/A **Sharp Objects?** No

Liner Lid Present? No **Sharp Objects Are Protected?** Yes

Liner Lid Deformed? N/A **Layers Of Confinement** 0

Fill Factor 60

Bag Closure Method No Bags

Liquids

Liquid Present? No **Internal Container with Liquid** No

Internal Container with Liquid 0 pints **LA Candidate** No

Liquid Between Liner & Drum 0 pints **Containerized Liquid**

Total Liquid Amount 0 pints **Containerized Liquid Amt** 0 pints

Other Liquids 0 pints **Comment**

Prohibited Liquids Present No **Comment**

Contents-Drum or Box

	Value	Comment		Value	Comment
Lead?	No		Mercury Present?	No	
Wet Cell Batteries?	No		Explosives?	No	
Prohibited Compressed Gases?	No		PCBs Present?	No	
Aerosol Cans?	No		PCB Mass (lbs)	0	
Non-Mixed Hazardous Waste Present?	No		Sealed Containers Over 4L?	No	

Non-Radionuclide Pyrophoric Materials Present? No

Waste exhibiting the characteristics of Ignitability, Corrosivity or Reactivity Present? No

Wastes Incompatible with backfill, seal and panel closure materials, container and packaging materials,shipping container or other wastes? No

Impenetrable Dense Objects? Yes - Unacceptable impenetrable waste.

Waste Material Items

Packaging Materials

Material Item	Quantity	Unit	Unit Wt(lbs)	Item Wt(lbs)

Waste Items byWeight

Material Item	Quantity	Unit	Unit Wt(lbs)	Item Wt(lbs)
soil	1.000	EACH	100.000	100.000
metal debris from 55 gal drum deteriated	1.000	EACH	50.000	50.000

Batch Id RTR14-00086 **Container Id** 10355860 **Analysis Id** 0000096654

Waste Items by Volume

Material Item	Quantity	Unit	Unit Wt(lbs)	Item Wt(lbs)

Waste Parameters

Waste Parameter	Remaining Weight %	Actual Weight Lbs
Iron-based Metals/Alloys	0.000	50.000
Aluminum-based Metals/Alloys	0.000	0.000
Other metals	0.000	0.000
Other Inorganic Materials	100.000	216.820
Cellulosics	0.000	0.000
Rubber	0.000	0.000
Plastic (Waste Materials)	0.000	0.000
Inorganic matrix	0.000	0.000
Organic matrix	0.000	0.000
Soils/gravel	0.000	100.000
Steel (packaging materials)	0.000	83.000
Plastic (packaging materials)	0.000	0.000
Cellulosics Packaging	0.000	0.000
MLLW Waste	0.000	0.000

Analysis Esignature History

Esig Approval Id	User Id	Esignature Date	Comment
2748052	KHUGHES	04-MAY-2014 10:50	
2745138	CHINKLE	30-APR-2014 05:12	Batch is promoted. chd 4/30/14
2744713	CSIMMONS	29-APR-2014 14:33	
2743940	CHINKLE	28-APR-2014 15:09	This batch is returned for rework. AK does not concur with the recommended IDC change for containers 10514677, 10514676, 10514674, 10514425, 10514419, 10513714, 10490226, 10490092, 10356098, 10355921, 10355920, 10355860, 10353586, 10351625, 10350049, 10350015 and 10229930. CHD 04/28/14
2734633	CTIEGS	17-APR-2014 10:13	

Batch Id RTR14-00086 **Container Id** 10490092 **Analysis Id** 0000096655

Container Type 7A85 85 Gallon Open Head drum, DOT 7A **Analysis Status** Pass

RTR Date 17-APR-2014 10:54 **Gross Weight** 249.165 Lbs **Net Weight** 108.165 Lbs

Equipment Z-213-106 **Waste Matrix Code** S5490 **IDC** RF-760 RFP Debris

Recording Id 2RTR14-00058 **Procedure Id** INST-OI-12 **Revision** 53 **Approval Level** SPM

Is Test Pattern Resolution Ok? Yes **Start Side** A **Replicate** No **OIO** No

Audio Visual Ok? Yes **Operator** CTIEGS

Result Comment Remaining waste appears to contain paper and rags, wood.
AK does not concur with the recommended IDC change from BN-180 to BN-524 for container 10490092 because traveler identified at retrieval indicates RF. Instead, AK recommends an IDC of RF-760. CHD 04/28/14
Rework: Corrected IDC per AK comment. cjs 04/29/14
AK concurs with the recommended IDC, RF-760, for container 10490092. No AKR or NCR is necessary. CHD 04/30/14

Package

IDC Correct Yes **Recommended IDC** RF-760 **Summary Category** S5000

Idc Change Reason Per AK

Rigid Liner Present? No **LinerType** NO LINER

Liner Punctured? N/A **Sharp Objects?** No

Liner Lid Present? No **Sharp Objects Are Protected?** Yes

Liner Lid Deformed? N/A **Layers Of Confinement** 2

Fill Factor 100

Bag Closure Method Twisted and Taped

Liquids

Liquid Present? Yes **Internal Container with Liquid** No

Internal Container with Liquid 0 pints **LA Candidate** No

Liquid Between Liner & Drum 0 pints **Containerized Liquid**

Total Liquid Amount .02 pints **Containerized Liquid Amt** 0 pints

Other Liquids .02 pints **Comment** liquid toward bottom in bagging.

Prohibited Liquids Present No **Comment**

Contents-Drum or Box

	Value	Comment		Value	Comment
Lead?	No		**Mercury Present?**	No	
Wet Cell Batteries?	No		**Explosives?**	No	
Prohibited Compressed Gases?	No		**PCBs Present?**	No	
Aerosol Cans?	No		**PCB Mass (lbs)**	0	
Non-Mixed Hazardous Waste Present?	No		**Sealed Containers Over 4L?**	No	

Non-Radionuclide Pyrophoric Materials Present? No

Waste exhibiting the characteristics of Ignitability, Corrosivity or Reactivity Present? No

Wastes Incompatible with backfill, seal and panel closure materials, container and packaging materials,shipping container or other wastes? No

Impenetrable Dense Objects? No

Waste Material Items

Packaging Materials

Material Item	Quantity	Unit	Unit Wt(lbs)	Item Wt(lbs)
Drum plastic bag	2.000	EACH	1.000	2.000
55-GAL DRUM (17c)	1.000	EACH	59.000	59.000

Waste Items byWeight

Material Item	Quantity	Unit	Unit Wt(lbs)	Item Wt(lbs)
misc metals, metal oil housing, wire, vacuum hose	1.000	EACH	20.000	20.000
Cardboard liner	1.000	EACH	4.000	4.000
Wood Frame HEPA 8 x 8 x 6	1.000	EACH	4.860	4.860
Respirator Cartridges	2.000	EACH	0.250	0.500

Batch Id RTR14-00086 **Container Id** 10490092 **Analysis Id** 0000096655

Waste Items by Volume

Material Item	Quantity	Unit	Unit Wt(lbs)	Item Wt(lbs)
Liquids for Other Inorganics	0.020	PINTS	1.000	0.020

Waste Parameters

Waste Parameter	Remaining Weight %	Actual Weight Lbs
Iron-based Metals/Alloys	0.000	20.000
Aluminum-based Metals/Alloys	0.000	0.836
Other metals	0.000	0.000
Other Inorganic Materials	0.000	0.020
Cellulosics	100.000	87.309
Rubber	0.000	0.000
Plastic (Waste Materials)	0.000	0.000
Inorganic matrix	0.000	0.000
Organic matrix	0.000	0.000
Soils/gravel	0.000	0.000
Steel (packaging materials)	0.000	139.000
Plastic (packaging materials)	0.000	2.000
Cellulosics Packaging	0.000	0.000
MLLW Waste	0.000	0.000

Analysis Esignature History

Esig Approval Id	User Id	Esignature Date	Comment
2745134	CHINKLE	30-APR-2014 05:12	Batch is promoted. chd 4/30/14
2744727	CSIMMONS	29-APR-2014 14:41	
2743935	CHINKLE	28-APR-2014 15:09	This batch is returned for rework. AK does not concur with the recommended IDC change for containers 10514677, 10514676, 10514674, 10514425, 10514419, 10513714, 10490226, 10490092, 10356098, 10355921, 10355920, 10355860, 10353586, 10351625, 10350049, 10350015 and 10229930. CHD 04/28/14
2734665	CTIEGS	17-APR-2014 10:54	

Batch Id RTR14-00086 **Container Id** 10490226 **Analysis Id** 0000096656

Container Type 7A85 85 Gallon Open Head drum, DOT 7A **Analysis Status** Pass

RTR Date 17-APR-2014 11:11 **Gross Weight** 244.755 Lbs **Net Weight** 103.755 Lbs

Equipment Z-213-106 **Waste Matrix Code** S5490 **IDC** RF-760 RFP Debris

Recording Id 2RTR14-00058 **Procedure Id** INST-OI-12 **Revision** 53 **Approval Level** SPM

Is Test Pattern Resolution Ok? Yes **Start Side** A **Replicate** No **OIO** No

Audio Visual Ok? Yes **Operator** CTIEGS

Result Comment Remaining waste appears to contain paper and rags, PPE.
AK does not concur with the recommended IDC change from BN-180 to BN-524 for container 10490226 because traveler identified at retrieval indicates RF. Instead, AK recommends an IDC of RF-760. CHD 04/28/14
Rework: Corrected IDC per AK comment. cjs 04/29/14
AK concurs with the recommended IDC, RF-760, for container 10490226. No AKR or NCR is necessary. CHD 04/30/14

Package

IDC Correct Yes **Recommended IDC** RF-760 **Summary Category** S5000

Idc Change Reason Per AK

Rigid Liner Present? No **LinerType** NO LINER

Liner Punctured? N/A **Sharp Objects?** No

Liner Lid Present? No **Sharp Objects Are Protected?** Yes

Liner Lid Deformed? N/A **Layers Of Confinement** 3

Fill Factor 98

Bag Closure Method Twisted and Taped

Liquids

Liquid Present? No **Internal Container with Liquid** No

Internal Container with Liquid 0 pints **LA Candidate** No

Liquid Between Liner & Drum 0 pints **Containerized Liquid**

Total Liquid Amount 0 pints **Containerized Liquid Amt** 0 pints

Other Liquids 0 pints **Comment**

Prohibited Liquids Present No **Comment**

Contents-Drum or Box

	Value	Comment		Value	Comment
Lead?	Yes, Acceptable	small piece of lead	**Mercury Present?**	No	
Wet Cell Batteries?	No		**Explosives?**	No	
Prohibited Compressed Gases?	No		**PCBs Present?**	No	
Aerosol Cans?	No		**PCB Mass (lbs)**	0	
Non-Mixed Hazardous Waste Present?	No		**Sealed Containers Over 4L?**	No	

Non-Radionuclide Pyrophoric Materials Present? No

Waste exhibiting the characteristics of Ignitability, Corrosivity or Reactivity Present? No

Wastes Incompatible with backfill, seal and panel closure materials, container and packaging materials,shipping container or other wastes? No

Impenetrable Dense Objects? No

Waste Material Items

Packaging Materials

Material Item	Quantity	Unit	Unit Wt(lbs)	Item Wt(lbs)
Drum plastic bag	2.000	EACH	1.000	2.000
55-GAL DRUM (17c)	1.000	EACH	59.000	59.000

Batch Id RTR14-00086 **Container Id** 10490226 **Analysis Id** 0000096656

Waste Items byWeight

Material Item	Quantity	Unit	Unit Wt(lbs)	Item Wt(lbs)
small piece lead	1.000	EACH	0.150	0.150
respirator mask without cartridges	1.000	EACH	3.000	3.000
misc metals, wire steel toes	1.000	EACH	15.000	15.000
Plastic bag for waste	2.000	EACH	0.250	0.500
Respirator Cartridges	4.000	EACH	0.250	1.000

Waste Items bv Volume

Material Item	Quantity	Unit	Unit Wt(lbs)	Item Wt(lbs)
Oil-Dri (Inside 55 gal drum)	16.000	PINTS	0.420	6.720

Waste Parameters

Waste Parameter	Remaining Weight %	Actual Weight Lbs
Iron-based Metals/Alloys	0.000	15.000
Aluminum-based Metals/Alloys	0.000	0.700
Other metals	0.000	0.150
Other Inorganic Materials	0.000	6.720
Cellulosics	100.000	77.685
Rubber	0.000	3.000
Plastic (Waste Materials)	0.000	0.500
Inorganic matrix	0.000	0.000
Organic matrix	0.000	0.000
Soils/gravel	0.000	0.000
Steel (packaging materials)	0.000	139.000
Plastic (packaging materials)	0.000	2.000
Cellulosics Packaging	0.000	0.000
MLLW Waste	0.000	0.000

Analysis Esignature History

Esig Approval Id	User Id	Esignature Date	Comment
2745133	CHINKLE	30-APR-2014 05:12	Batch is promoted. chd 4/30/14
2744734	CSIMMONS	29-APR-2014 14:46	
2743934	CHINKLE	28-APR-2014 15:09	This batch is returned for rework. AK does not concur with the recommended IDC change for containers 10514677, 10514676, 10514674, 10514425, 10514419, 10513714, 10490226, 10490092, 10356098, 10355921, 10355920, 10355860, 10353586, 10351625, 10350049, 10350015 and 10229930. CHD 04/28/14
2734677	CTIEGS	17-APR-2014 11:11	

Batch Id RTR14-00086 **Container Id** 10514425 **Analysis Id** 0000096657

Container Type 7A85 85 Gallon Open Head drum, DOT 7A **Analysis Status** Pass

RTR Date 17-APR-2014 11:30 **Gross Weight** 238.140 **Lbs** **Net Weight** 97.140 **Lbs**

Equipment Z-213-106 **Waste Matrix Code** S5490 **IDC** RF-760 RFP Debris

Recording Id 2RTR14-00058 **Procedure Id** INST-OI-12 **Revision** 53 **Approval Level** SPM

Is Test Pattern Resolution Ok? Yes **Start Side** A **Replicate** No **OIO** No

Audio Visual Ok? Yes **Operator** CTIEGS

Result Comment Remaining waste appears to contain paper and rags, PPE.
AK does not concur with the recommended IDC change from BN-180 to BN-524 for container 10514425 because traveler identified at retrieval indicates RF. Instead, AK recommends an IDC of RF-760. CHD 04/28/14
Rework: Corrected IDC per AK comment. cjs 04/29/14
AK concurs with the recommended IDC, RF-760, for container 10514425. No AKR or NCR is necessary. CHD 04/30/14

Package

IDC Correct Yes **Recommended IDC** RF-760 **Summary Category** S5000

Idc Change Reason Per AK

Rigid Liner Present? No **LinerType** NO LINER

Liner Punctured? N/A **Sharp Objects?** No

Liner Lid Present? No **Sharp Objects Are Protected?** Yes

Liner Lid Deformed? N/A **Layers Of Confinement** 3

Fill Factor 80

Bag Closure Method Twisted and Taped

Liquids

Liquid Present? No **Internal Container with Liquid** No

Internal Container with Liquid 0 pints **LA Candidate** No

Liquid Between Liner & Drum 0 pints **Containerized Liquid**

Total Liquid Amount 0 pints **Containerized Liquid Amt** 0 pints

Other Liquids 0 pints **Comment**

Prohibited Liquids Present No **Comment**

Contents-Drum or Box

	Value	Comment		Value	Comment
Lead?	No		**Mercury Present?**	No	
Wet Cell Batteries?	No		**Explosives?**	No	
Prohibited Compressed Gases?	No		**PCBs Present?**	No	
Aerosol Cans?	No		**PCB Mass (lbs)**	0	
Non-Mixed Hazardous Waste Present?	No		**Sealed Containers Over 4L?**	No	

Non-Radionuclide Pyrophoric Materials Present? No

Waste exhibiting the characteristics of Ignitability, Corrosivity or Reactivity Present? No

Wastes Incompatible with backfill, seal and panel closure materials, container and packaging materials,shipping container or other wastes? No

Impenetrable Dense Objects? No

Waste Material Items

Packaging Materials

Material Item	Quantity	Unit	Unit Wt(lbs)	Item Wt(lbs)
Drum plastic bag	2.000	EACH	1.000	2.000
55-GAL DRUM (17c)	1.000	EACH	59.000	59.000

Waste Items byWeight

Material Item	Quantity	Unit	Unit Wt(lbs)	Item Wt(lbs)
vacuum motor and housing.	1.000	EACH	30.000	30.000
Plastic bag for waste	1.000	EACH	0.250	0.250

Batch Id RTR14-00086 **Container Id** 10514425 **Analysis Id** 0000096657

Waste Items by Volume

Material Item	Quantity	Unit	Unit Wt(lbs)	Item Wt(lbs)
Oil-Dri (Inside 55 gal drum)	10.000	PINTS	0.420	4.200

Waste Parameters

Waste Parameter	Remaining Weight %	Actual Weight Lbs
Iron-based Metals/Alloys	0.000	30.000
Aluminum-based Metals/Alloys	0.000	0.000
Other metals	0.000	0.000
Other Inorganic Materials	0.000	4.200
Cellulosics	100.000	62.690
Rubber	0.000	0.000
Plastic (Waste Materials)	0.000	0.250
Inorganic matrix	0.000	0.000
Organic matrix	0.000	0.000
Soils/gravel	0.000	0.000
Steel (packaging materials)	0.000	139.000
Plastic (packaging materials)	0.000	2.000
Cellulosics Packaging	0.000	0.000
MLLW Waste	0.000	0.000

Analysis Esignature History

Esig Approval Id	User Id	Esignature Date	Comment
2745130	CHINKLE	30-APR-2014 05:12	Batch is promoted. chd 4/30/14
2744755	CSIMMONS	29-APR-2014 14:55	
2743931	CHINKLE	28-APR-2014 15:09	This batch is returned for rework. AK does not concur with the recommended IDC change for containers 10514677, 10514676, 10514674, 10514425, 10514419, 10513714, 10490226, 10490092, 10356098, 10355921, 10355920, 10355860, 10353586, 10351625, 10350049, 10350015 and 10229930. CHD 04/28/14
2734699	CTIEGS	17-APR-2014 11:30	

Batch Id RTR14-00086 **Container Id** 10514676 **Analysis Id** 0000096658

Container Type 7A85 85 Gallon Open Head drum, DOT 7A **Analysis Status** Pass

RTR Date 17-APR-2014 11:53 **Gross Weight** 220.500 Lbs **Net Weight** 79.500 Lbs

Equipment Z-213-106 **Waste Matrix Code** S5490 **IDC** RF-760 RFP Debris

Recording Id 2RTR14-00058 **Procedure Id** INST-OI-12 **Revision** 53 **Approval Level** SPM

Is Test Pattern Resolution Ok? Yes **Start Side** A **Replicate** No **OIO** No

Audio Visual Ok? Yes **Operator** CTIEGS

Result Comment Remaining waste appears to contain plastic sheeting, containers, poly bottles small.
AK does not concur with the recommended IDC change from BN-180 to BN-524 for container 10514676 because traveler identified at retrieval indicates RF. Instead, AK recommends an IDC of RF-760. CHD 04/28/14
Rework: Corrected IDC per AK comment. cjs 04/29/14
AK concurs with the recommended IDC, RF-760, for container 10514676. No AKR or NCR is necessary. CHD 04/30/14

Package

IDC Correct Yes **Recommended IDC** RF-760 **Summary Category** S5000

Idc Change Reason Per AK

Rigid Liner Present? No **LinerType** NO LINER

Liner Punctured? N/A **Sharp Objects?** No

Liner Lid Present? No **Sharp Objects Are Protected?** Yes

Liner Lid Deformed? N/A **Layers Of Confinement** 3

Fill Factor 98

Bag Closure Method Twisted and Taped

Liquids

Liquid Present? Yes **Internal Container with Liquid** Yes

Internal Container with Liquid .02 pints **LA Candidate** No

Liquid Between Liner & Drum 0 pints **Containerized Liquid**

Total Liquid Amount .14 pints **Containerized Liquid Amt** 0 pints

Other Liquids .12 pints **Comment** liquid in small poly bottle toward top of waste, liquid in bagging toward bottom of waste.

Prohibited Liquids Present No **Comment**

Contents-Drum or Box

	Value	Comment		Value	Comment
Lead?	Yes, Acceptable	lead tape	**Mercury Present?**	No	
Wet Cell Batteries?	No		**Explosives?**	No	
Prohibited Compressed Gases?	No		**PCBs Present?**	No	
Aerosol Cans?	No		**PCB Mass (lbs)**	0	
Non-Mixed Hazardous Waste Present?	No		**Sealed Containers Over 4L?**	No	

Non-Radionuclide Pyrophoric Materials Present? No

Waste exhibiting the characteristics of Ignitability, Corrosivity or Reactivity Present? No

Wastes Incompatible with backfill, seal and panel closure materials, container and packaging materials,shipping container or other wastes? No

Impenetrable Dense Objects? No

Waste Material Items

Packaging Materials

Material Item	Quantity	Unit	Unit Wt(lbs)	Item Wt(lbs)
Drum plastic bag	2.000	EACH	1.000	2.000
55-GAL DRUM (17c)	1.000	EACH	59.000	59.000

Waste Items byWeight

Material Item	Quantity	Unit	Unit Wt(lbs)	Item Wt(lbs)
lead tape	1.000	EACH	0.250	0.250
Plastic bag for waste	1.000	EACH	0.250	0.250

Batch Id RTR14-00086 **Container Id** 10514676 **Analysis Id** 0000096658

Waste Items by Volume

Material Item	Quantity	Unit	Unit Wt(lbs)	Item Wt(lbs)
Oil-Dri (Inside 55 gal drum)	6.000	PINTS	0.420	2.520
Liquids for Other Inorganics	0.140	PINTS	1.000	0.140

Waste Parameters

Waste Parameter	Remaining Weight %	Actual Weight Lbs
Iron-based Metals/Alloys	0.000	0.000
Aluminum-based Metals/Alloys	0.000	0.000
Other metals	0.000	0.250
Other Inorganic Materials	0.000	2.660
Cellulosics	0.000	0.000
Rubber	0.000	0.000
Plastic (Waste Materials)	100.000	76.590
Inorganic matrix	0.000	0.000
Organic matrix	0.000	0.000
Soils/gravel	0.000	0.000
Steel (packaging materials)	0.000	139.000
Plastic (packaging materials)	0.000	2.000
Cellulosics Packaging	0.000	0.000
MLLW Waste	0.000	0.000

Analysis Esignature History

Esig Approval Id	User Id	Esignature Date	Comment
2745128	CHINKLE	30-APR-2014 05:12	Batch is promoted. chd 4/30/14
2744759	CSIMMONS	29-APR-2014 14:58	
2743929	CHINKLE	28-APR-2014 15:09	This batch is returned for rework. AK does not concur with the recommended IDC change for containers 10514677, 10514676, 10514674, 10514425, 10514419, 10513714, 10490226, 10490092, 10356098, 10355921, 10355920, 10355860, 10353586, 10351625, 10350049, 10350015 and 10229930. CHD 04/28/14
2734713	CTIEGS	17-APR-2014 11:53	

Batch Id RTR14-00086 **Container Id** 10514419 **Analysis Id** 0000096659

Container Type 7A85 85 Gallon Open Head drum, DOT 7A **Analysis Status** Pass

RTR Date 17-APR-2014 13:01 **Gross Weight** 218.295 **Lbs** **Net Weight** 77.295 **Lbs**

Equipment Z-213-106 **Waste Matrix Code** S5490 **IDC** RF-760 RFP Debris

Recording Id 2RTR14-00058 **Procedure Id** INST-OI-12 **Revision** 53 **Approval Level** SPM

Is Test Pattern Resolution Ok? Yes **Start Side** A **Replicate** No **OIO** No

Audio Visual Ok? Yes **Operator** DMOORE

Result Comment Remaining waste appears to be plastic sheeting, bagging, and tubing.
AK does not concur with the recommended IDC change from BN-180 to BN-524 for container 10514419 because traveler identified at retrieval indicates RF. Instead, AK recommends an IDC of RF-760. CHD 04/28/14
Rework: Corrected IDC per AK comment. cjs 04/29/14
AK concurs with the recommended IDC, RF-760, for container 10514419. No AKR or NCR is necessary. CHD 04/30/14

Package

IDC Correct Yes **Recommended IDC** RF-760 **Summary Category** S5000

Idc Change Reason Per AK

Rigid Liner Present? No **LinerType** NO LINER

Liner Punctured? N/A **Sharp Objects?** No

Liner Lid Present? No **Sharp Objects Are Protected?** Yes

Liner Lid Deformed? N/A **Layers Of Confinement** 3

Fill Factor 95

Bag Closure Method Twisted and Taped

Liquids

Liquid Present? No **Internal Container with Liquid** No

Internal Container with Liquid 0 pints **LA Candidate** No

Liquid Between Liner & Drum 0 pints **Containerized Liquid**

Total Liquid Amount 0 pints **Containerized Liquid Amt** 0 pints

Other Liquids 0 pints **Comment**

Prohibited Liquids Present No **Comment**

Contents-Drum or Box

	Value	Comment		Value	Comment
Lead?	No		**Mercury Present?**	No	
Wet Cell Batteries?	No		**Explosives?**	No	
Prohibited Compressed Gases?	No		**PCBs Present?**	No	
Aerosol Cans?	No		**PCB Mass (lbs)**	0	
Non-Mixed Hazardous Waste Present?	No		**Sealed Containers Over 4L?**	No	

Non-Radionuclide Pyrophoric Materials Present? No

Waste exhibiting the characteristics of Ignitability, Corrosivity or Reactivity Present? No

Wastes Incompatible with backfill, seal and panel closure materials, container and packaging materials,shipping container or other wastes? No

Impenetrable Dense Objects? No

Waste Material Items

Packaging Materials

Material Item	Quantity	Unit	Unit Wt(lbs)	Item Wt(lbs)
Drum plastic bag	2.000	EACH	1.000	2.000
55-GAL DRUM (17c)	1.000	EACH	59.000	59.000

Waste Items byWeight

Material Item	Quantity	Unit	Unit Wt(lbs)	Item Wt(lbs)
paper, rags	1.000	EACH	10.000	10.000
Plastic bag for waste	1.000	EACH	0.250	0.250

Batch Id RTR14-00086 **Container Id** 10514419 **Analysis Id** 0000096659

Waste Items by Volume

Material Item	Quantity	Unit	Unit Wt(lbs)	Item Wt(lbs)
Oil-Dri (Inside 55 gal drum)	30.000	PINTS	0.420	12.600

Waste Parameters

Waste Parameter	Remaining Weight %	Actual Weight Lbs
Iron-based Metals/Alloys	0.000	0.000
Aluminum-based Metals/Alloys	0.000	0.000
Other metals	0.000	0.000
Other Inorganic Materials	0.000	12.600
Cellulosics	0.000	10.000
Rubber	0.000	0.000
Plastic (Waste Materials)	100.000	54.695
Inorganic matrix	0.000	0.000
Organic matrix	0.000	0.000
Soils/gravel	0.000	0.000
Steel (packaging materials)	0.000	139.000
Plastic (packaging materials)	0.000	2.000
Cellulosics Packaging	0.000	0.000
MLLW Waste	0.000	0.000

Analysis Esignature History

Esig Approval Id	User Id	Esignature Date	Comment
2745131	CHINKLE	30-APR-2014 05:12	Batch is promoted. chd 4/30/14
2744749	CSIMMONS	29-APR-2014 14:53	
2743932	CHINKLE	28-APR-2014 15:09	This batch is returned for rework. AK does not concur with the recommended IDC change for containers 10514677, 10514676, 10514674, 10514425, 10514419, 10513714, 10490226, 10490092, 10356098, 10355921, 10355920, 10355860, 10353586, 10351625, 10350049, 10350015 and 10229930. CHD 04/28/14
2734740	DMOORE	17-APR-2014 13:01	

Batch Id RTR14-00086 **Container Id** 10513714 **Analysis Id** 0000096660

Container Type 7A85 85 Gallon Open Head drum, DOT 7A **Analysis Status** Pass

RTR Date 17-APR-2014 13:27 **Gross Weight** 196.245 Lbs **Net Weight** 56.245 Lbs

Equipment Z-213-106 **Waste Matrix Code** S5490 **IDC** RF-760 RFP Debris

Recording Id 2RTR14-00058 **Procedure Id** INST-OI-12 **Revision** 53 **Approval Level** SPM

Is Test Pattern Resolution Ok? Yes **Start Side** A **Replicate** No **OIO** No

Audio Visual Ok? Yes **Operator** DMOORE

Result Comment Remaining waste appears to be paper, cardboard, and rags.
AK does not concur with the recommended IDC change from BN-180 to BN-524 for container 10513714 because traveler identified at retrieval indicates RF. Instead, AK recommends an IDC of RF-760. CHD 04/28/14
Rework: Corrected IDC per AK comment. cjs 04/29/14
AK concurs with the recommended IDC, RF-760, for container 10513714. No AKR or NCR is necessary. CHD 04/30/14

Package

IDC Correct Yes **Recommended IDC** RF-760 **Summary Category** S5000

Idc Change Reason Per AK

Rigid Liner Present? No **LinerType** NO LINER

Liner Punctured? N/A **Sharp Objects?** No

Liner Lid Present? No **Sharp Objects Are Protected?** Yes

Liner Lid Deformed? N/A **Layers Of Confinement** 2

Fill Factor 100

Bag Closure Method Twisted and Taped

Liquids

Liquid Present? No **Internal Container with Liquid** No

Internal Container with Liquid 0 pints **LA Candidate** No

Liquid Between Liner & Drum 0 pints **Containerized Liquid**

Total Liquid Amount 0 pints **Containerized Liquid Amt** 0 pints

Other Liquids 0 pints **Comment**

Prohibited Liquids Present No **Comment**

Contents-Drum or Box

	Value	Comment
Lead?	Yes, Acceptable	small pieces
Wet Cell Batteries?	No	
Prohibited Compressed Gases?	No	
Aerosol Cans?	No	
Non-Mixed Hazardous Waste Present?	No	

	Value	Comment
Mercury Present?	No	
Explosives?	No	
PCBs Present?	No	
PCB Mass (lbs)	0	
Sealed Containers Over 4L?	No	

Non-Radionuclide Pyrophoric Materials Present? No

Waste exhibiting the characteristics of Ignitability, Corrosivity or Reactivity Present? No

Wastes Incompatible with backfill, seal and panel closure materials, container and packaging materials,shipping container or other wastes? No

Impenetrable Dense Objects? No

Waste Material Items

Packaging Materials

Material Item	Quantity	Unit	Unit Wt(lbs)	Item Wt(lbs)
Drum plastic bag	1.000	EACH	1.000	1.000
55-GAL DRUM (17c)	1.000	EACH	59.000	59.000

Waste Items byWeight

Material Item	Quantity	Unit	Unit Wt(lbs)	Item Wt(lbs)
bucket, wire, pipe, electric wire, misc metals	1.000	EACH	6.000	6.000
plastic sheeting, bagging, tubing	1.000	EACH	5.000	5.000
Plastic bag for waste	1.000	EACH	0.250	0.250
D-cell Battery	4.000	EACH	0.250	1.000

Batch Id RTR14-00086 **Container Id** 10513714 **Analysis Id** 0000096660

Waste Items by Volume

Material Item	Quantity	Unit	Unit Wt(lbs)	Item Wt(lbs)
Oil-Dri (Inside 55 gal drum)	10.000	PINTS	0.420	4.200

Waste Parameters

Waste Parameter	Remaining Weight %	Actual Weight Lbs
Iron-based Metals/Alloys	0.000	6.000
Aluminum-based Metals/Alloys	0.000	0.000
Other metals	0.000	1.000
Other Inorganic Materials	0.000	4.200
Cellulosics	100.000	39.795
Rubber	0.000	0.000
Plastic (Waste Materials)	0.000	5.250
Inorganic matrix	0.000	0.000
Organic matrix	0.000	0.000
Soils/gravel	0.000	0.000
Steel (packaging materials)	0.000	139.000
Plastic (packaging materials)	0.000	1.000
Cellulosics Packaging	0.000	0.000
MLLW Waste	0.000	0.000

Analysis Esignature History

Esig Approval Id	User Id	Esignature Date	Comment
2745132	CHINKLE	30-APR-2014 05:12	Batch is promoted. chd 4/30/14
2744744	CSIMMONS	29-APR-2014 14:50	
2743933	CHINKLE	28-APR-2014 15:09	This batch is returned for rework. AK does not concur with the recommended IDC change for containers 10514677, 10514676, 10514674, 10514425, 10514419, 10513714, 10490226, 10490092, 10356098, 10355921, 10355920, 10355860, 10353586, 10351625, 10350049, 10350015 and 10229930. CHD 04/28/14
2734745	DMOORE	17-APR-2014 13:27	

Batch Id RTR14-00086 **Container Id** 10514677 **Analysis Id** 0000096661

Container Type 7A85 85 Gallon Open Head drum, DOT 7A **Analysis Status** Pass

RTR Date 17-APR-2014 13:56 **Gross Weight** 271.215 Lbs **Net Weight** 130.215 Lbs

Equipment Z-213-106 **Waste Matrix Code** S5490 **IDC** RF-760 RFP Debris

Recording Id 2RTR14-00058 **Procedure Id** INST-OI-12 **Revision** 53 **Approval Level** SPM

Is Test Pattern Resolution Ok? Yes **Start Side** A **Replicate** No **OIO** No

Audio Visual Ok? Yes **Operator** DMOORE

Result Comment Remaining waste appears to be paper, and rags.
AK does not concur with the recommended IDC change from BN-180 to BN-524 for container 10514677 because traveler identified at retrieval indicates RF. Instead, AK recommends an IDC of RF-760. CHD 04/28/14
Rework: Corrected IDC per AK comment. cjs 04/29/14
AK concurs with the recommended IDC, RF-760, for container 10514677. No AKR or NCR is necessary. CHD 04/30/14

Package

IDC Correct Yes **Recommended IDC** RF-760 **Summary Category** S5000

Idc Change Reason Per AK

Rigid Liner Present? No **LinerType** NO LINER

Liner Punctured? N/A **Sharp Objects?** No

Liner Lid Present? No **Sharp Objects Are Protected?** Yes

Liner Lid Deformed? N/A **Layers Of Confinement** 3

Fill Factor 100

Bag Closure Method Twisted and Taped

Liquids

Liquid Present? No **Internal Container with Liquid** No

Internal Container with Liquid 0 pints **LA Candidate** No

Liquid Between Liner & Drum 0 pints **Containerized Liquid**

Total Liquid Amount 0 pints **Containerized Liquid Amt** 0 pints

Other Liquids 0 pints **Comment**

Prohibited Liquids Present No **Comment**

Contents-Drum or Box

	Value	Comment		Value	Comment
Lead?	Yes, Acceptable	small pieces, lead tape	**Mercury Present?**	No	
Wet Cell Batteries?	No		**Explosives?**	No	
Prohibited Compressed Gases?	No		**PCBs Present?**	No	
Aerosol Cans?	No		**PCB Mass (lbs)**	0	
Non-Mixed Hazardous Waste Present?	No		**Sealed Containers Over 4L?**	No	

Non-Radionuclide Pyrophoric Materials Present? No

Waste exhibiting the characteristics of Ignitability, Corrosivity or Reactivity Present? No

Wastes Incompatible with backfill, seal and panel closure materials, container and packaging materials,shipping container or other wastes? No

Impenetrable Dense Objects? No

Waste Material Items

Packaging Materials

Material Item	Quantity	Unit	Unit Wt(lbs)	Item Wt(lbs)
Drum plastic bag	2.000	EACH	1.000	2.000
55-GAL DRUM (17c)	1.000	EACH	59.000	59.000

Batch Id RTR14-00086 **Container Id** 10514677 **Analysis Id** 0000096661

Waste Items byWeight

Material Item	Quantity	Unit	Unit Wt(lbs)	Item Wt(lbs)
RAD grates, misc metals	1.000	EACH	2.000	2.000
plastic sheeting, bagging	1.000	EACH	25.000	25.000
lead pieces, lead tape	1.000	EACH	4.000	4.000
Plastic bag for waste	1.000	EACH	0.250	0.250
Metal can	4.000	EACH	0.500	2.000

Waste Items by Volume

Material Item	Quantity	Unit	Unit Wt(lbs)	Item Wt(lbs)
Oil-Dri (Inside 55 gal drum)	12.000	PINTS	0.420	5.040

Waste Parameters

Waste Parameter	Remaining Weight %	Actual Weight Lbs
Iron-based Metals/Alloys	0.000	4.000
Aluminum-based Metals/Alloys	0.000	0.000
Other metals	0.000	4.000
Other Inorganic Materials	0.000	5.040
Cellulosics	100.000	91.925
Rubber	0.000	0.000
Plastic (Waste Materials)	0.000	25.250
Inorganic matrix	0.000	0.000
Organic matrix	0.000	0.000
Soils/gravel	0.000	0.000
Steel (packaging materials)	0.000	139.000
Plastic (packaging materials)	0.000	2.000
Cellulosics Packaging	0.000	0.000
MLLW Waste	0.000	0.000

Analysis Esignature History

Esig Approval Id	User Id	Esignature Date	Comment
2745127	CHINKLE	30-APR-2014 05:12	Batch is promoted. chd 4/30/14
2744763	CSIMMONS	29-APR-2014 14:59	
2743928	CHINKLE	28-APR-2014 15:09	This batch is returned for rework. AK does not concur with the recommended IDC change for containers 10514677, 10514676, 10514674, 10514425, 10514419, 10513714, 10490226, 10490092, 10356098, 10355921, 10355920, 10355860, 10353586, 10351625, 10350049, 10350015 and 10229930. CHD 04/28/14
2734749	DMOORE	17-APR-2014 13:56	

Batch Id RTR14-00086 **Container Id** 10514674 **Analysis Id** 0000096662

Container Type 7A85 85 Gallon Open Head drum, DOT 7A **Analysis Status** Pass

RTR Date 17-APR-2014 14:19 **Gross Weight** 189.630 Lbs **Net Weight** 48.630 Lbs

Equipment Z-213-106 **Waste Matrix Code** S5490 **IDC** RF-760 RFP Debris

Recording Id 2RTR14-00058 **Procedure Id** INST-OI-12 **Revision** 53 **Approval Level** SPM

Is Test Pattern Resolution Ok? Yes **Start Side** A **Replicate** No **OIO** No

Audio Visual Ok? Yes **Operator** DMOORE

Result Comment Remaining waste appears to be wood, cardboard containers, cardboard rolls, flat cardboard, paper, Flo Flu filter, and rags.
AK does not concur with the recommended IDC change from BN-180 to BN-524 for container 10514674 because traveler identified at retrieval indicates RF. Instead, AK recommends an IDC of RF-760. CHD 04/28/14
Rework: Corrected IDC per AK comment. cjs 04/29/14
AK concurs with the recommended IDC, RF-760, for container 10514674. No AKR or NCR is necessary. CHD 04/30/14

Package

IDC Correct Yes **Recommended IDC** RF-760 **Summary Category** S5000

Idc Change Reason Per AK

Rigid Liner Present? No **LinerType** NO LINER

Liner Punctured? N/A **Sharp Objects?** No

Liner Lid Present? No **Sharp Objects Are Protected?** Yes

Liner Lid Deformed? N/A **Layers Of Confinement** 3

Fill Factor 100

Bag Closure Method Twisted and Taped

Liquids

Liquid Present? No **Internal Container with Liquid** No

Internal Container with Liquid 0 pints **LA Candidate** No

Liquid Between Liner & Drum 0 pints **Containerized Liquid**

Total Liquid Amount 0 pints **Containerized Liquid Amt** 0 pints

Other Liquids 0 pints **Comment**

Prohibited Liquids Present No **Comment**

Contents-Drum or Box

	Value	Comment		Value	Comment
Lead?	No		**Mercury Present?**	No	
Wet Cell Batteries?	No		**Explosives?**	No	
Prohibited Compressed Gases?	No		**PCBs Present?**	No	
Aerosol Cans?	No		**PCB Mass (lbs)**	0	
Non-Mixed Hazardous Waste Present?	No		**Sealed Containers Over 4L?**	No	

Non-Radionuclide Pyrophoric Materials Present? No

Waste exhibiting the characteristics of Ignitability, Corrosivity or Reactivity Present? No

Wastes Incompatible with backfill, seal and panel closure materials, container and packaging materials,shipping container or other wastes? No

Impenetrable Dense Objects? No

Waste Material Items

Packaging Materials

Material Item	Quantity	Unit	Unit Wt(lbs)	Item Wt(lbs)
Drum plastic bag	2.000	EACH	1.000	2.000
55-GAL DRUM (17c)	1.000	EACH	59.000	59.000

Waste Items byWeight

Material Item	Quantity	Unit	Unit Wt(lbs)	Item Wt(lbs)
round belt	1.000	EACH	0.500	0.500
plastic bagging, sheeting	1.000	EACH	5.000	5.000
wire, misc metals	1.000	EACH	2.000	2.000
Plastic bag for waste	1.000	EACH	0.250	0.250

Batch Id RTR14-00086 **Container Id** 10514674 **Analysis Id** 0000096662

Waste Items by Volume

Material Item	Quantity	Unit	Unit Wt(lbs)	Item Wt(lbs)
Oil-Dri (Inside 55 gal drum)	6.000	PINTS	0.420	2.520

Waste Parameters

Waste Parameter	Remaining Weight %	Actual Weight Lbs
Iron-based Metals/Alloys	0.000	2.000
Aluminum-based Metals/Alloys	0.000	0.000
Other metals	0.000	0.000
Other Inorganic Materials	0.000	2.520
Cellulosics	100.000	38.360
Rubber	0.000	0.500
Plastic (Waste Materials)	0.000	5.250
Inorganic matrix	0.000	0.000
Organic matrix	0.000	0.000
Soils/gravel	0.000	0.000
Steel (packaging materials)	0.000	139.000
Plastic (packaging materials)	0.000	2.000
Cellulosics Packaging	0.000	0.000
MLLW Waste	0.000	0.000

Analysis Esignature History

Esig Approval Id	User Id	Esignature Date	Comment
2745129	CHINKLE	30-APR-2014 05:12	Batch is promoted. chd 4/30/14
2744757	CSIMMONS	29-APR-2014 14:56	
2743930	CHINKLE	28-APR-2014 15:09	This batch is returned for rework. AK does not concur with the recommended IDC change for containers 10514677, 10514676, 10514674, 10514425, 10514419, 10513714, 10490226, 10490092, 10356098, 10355921, 10355920, 10355860, 10353586, 10351625, 10350049, 10350015 and 10229930. CHD 04/28/14
2734758	DMOORE	17-APR-2014 14:19	

Batch Id RTR14-00086 **Container Id** 10405601 **Analysis Id** 0000096665

Container Type C drum, 83 Gallon **Analysis Status** Pass

RTR Date 17-APR-2014 15:27 **Gross Weight** 262.395 Lbs **Net Weight** 118.395 Lbs

Equipment Z-213-106 **Waste Matrix Code** S5300 **IDC** RF-330 Paper and Rags-Dry

Recording Id 2RTR14-00058 **Procedure Id** INST-OI-12 **Revision** 53 **Approval Level** SPM

Is Test Pattern Resolution Ok? Yes **Start Side** A **Replicate** No **OIO** No

Audio Visual Ok? Yes **Operator** DMOORE

Result Comment Remaining waste appears to be paper, rags, flo flu filter, and PPE.

Package

IDC Correct Yes **Recommended IDC** **Summary Category** S5000

Idc Change Reason

Rigid Liner Present? No **LinerType** NO LINER

Liner Punctured? N/A **Sharp Objects?** No

Liner Lid Present? No **Sharp Objects Are Protected?** Yes

Liner Lid Deformed? N/A **Layers Of Confinement** 2

Fill Factor 95

Bag Closure Method Twisted and Taped

Liquids

Liquid Present? No **Internal Container with Liquid** No

Internal Container with Liquid 0 pints **LA Candidate** No

Liquid Between Liner & Drum 0 pints **Containerized Liquid**

Total Liquid Amount 0 pints **Containerized Liquid Amt** 0 pints

Other Liquids 0 pints **Comment**

Prohibited Liquids Present No **Comment**

Contents-Drum or Box

	Value	Comment		Value	Comment
Lead?	Yes, Acceptable	TID	**Mercury Present?**	No	
Wet Cell Batteries?	No		**Explosives?**	No	
Prohibited Compressed Gases?	No		**PCBs Present?**	No	
Aerosol Cans?	No		**PCB Mass (lbs)**	0	
Non-Mixed Hazardous Waste Present?	No		**Sealed Containers Over 4L?**	No	

Non-Radionuclide Pyrophoric Materials Present? No

Waste exhibiting the characteristics of Ignitability, Corrosivity or Reactivity Present? No

Wastes Incompatible with backfill, seal and panel closure materials, container and packaging materials,shipping container or other wastes? No

Impenetrable Dense Objects? Yes - Unacceptable 12 inch by 9 inch oblong object at bottom

Waste Material Items

Packaging Materials

Material Item	Quantity	Unit	Unit Wt(lbs)	Item Wt(lbs)
Drum plastic bag	2.000	EACH	1.000	2.000
55-GAL DRUM (17c)	1.000	EACH	59.000	59.000

Waste Items byWeight

Material Item	Quantity	Unit	Unit Wt(lbs)	Item Wt(lbs)
plastic sheeting, bagging, tubing	1.000	EACH	30.000	30.000
respirator mask	1.000	EACH	2.000	2.000
lead TID	1.000	EACH	0.200	0.200
wire, pipe pieces, nuts, misc metals	1.000	EACH	3.000	3.000

Waste Items by Volume

Material Item	Quantity	Unit	Unit Wt(lbs)	Item Wt(lbs)
Oil-Dri (Inside 55 gal drum)	10.000	PINTS	0.420	4.200

Batch Id RTR14-00086 **Container Id** 10405601 **Analysis Id** 0000096665

Waste Parameters

Waste Parameter	Remaining Weight %	Actual Weight Lbs
Iron-based Metals/Alloys	0.000	3.000
Aluminum-based Metals/Alloys	0.000	0.000
Other metals	0.000	0.200
Other Inorganic Materials	0.000	4.200
Cellulosics	100.000	78.995
Rubber	0.000	2.000
Plastic (Waste Materials)	0.000	30.000
Inorganic matrix	0.000	0.000
Organic matrix	0.000	0.000
Soils/gravel	0.000	0.000
Steel (packaging materials)	0.000	142.000
Plastic (packaging materials)	0.000	2.000
Cellulosics Packaging	0.000	0.000
MLLW Waste	0.000	0.000

Analysis Esignature History

Esig Approval Id	User Id	Esignature Date	Comment
2734812	DMOORE	17-APR-2014 15:27	

Batch Id RTR14-00086 **Container Id** 10351625 **Analysis Id** 0000096666

Container Type C drum, 83 Gallon **Analysis Status** Pass

RTR Date 17-APR-2014 15:54 **Gross Weight** 213.885 Lbs **Net Weight** 70.885 Lbs

Equipment Z-213-106 **Waste Matrix Code** S5490 **IDC** SD-177 Pre-1980 INL-Exhumed SDA

Recording Id 2RTR14-00058 **Procedure Id** INST-OI-12 **Revision** Heterogeneous Debris

Is Test Pattern Resolution Ok? Yes **Start Side** A **Replicate** 53 **Approval Level** SPM

Audio Visual Ok? Yes **Operator** No **OIO** No

Result Comment DMOORE

Remaining waste appears to be paper, rags, empty cardboard tape rolls, and PPE.
AK does not concur with the recommended IDC change from UN-000 to UN-00B for container 10351625 because waste is SDA debris. Instead, AK recommends an IDC of SD-177. CHD 04/28/14
Rework: Corrected IDC per AK comment. cjs 04/29/14
AK concurs with the recommended IDC, SD-177, for container 10351625. No AKR or NCR is necessary. CHD 04/30/14

Package

IDC Correct Yes **Recommended IDC** SD-177 **Summary Category** S5000

Idc Change Reason Per AK

Rigid Liner Present? No **LinerType** NO LINER

Liner Punctured? N/A **Sharp Objects?** No

Liner Lid Present? No **Sharp Objects Are Protected?** Yes

Liner Lid Deformed? N/A **Layers Of Confinement** 2

Fill Factor 95

Bag Closure Method Twisted and Taped

Liquids

Liquid Present? No **Internal Container with Liquid** No

Internal Container with Liquid 0 pints **LA Candidate** No

Liquid Between Liner & Drum 0 pints **Containerized Liquid**

Total Liquid Amount 0 pints **Containerized Liquid Amt** 0 pints

Other Liquids 0 pints **Comment**

Prohibited Liquids Present No **Comment**

Contents-Drum or Box

	Value	Comment		Value	Comment
Lead?	No		**Mercury Present?**	No	
Wet Cell Batteries?	No		**Explosives?**	No	
Prohibited Compressed Gases?	No		**PCBs Present?**	No	
Aerosol Cans?	No		**PCB Mass (lbs)**	0	
Non-Mixed Hazardous Waste Present?	No		**Sealed Containers Over 4L?**	No	

Non-Radionuclide Pyrophoric Materials Present? No

Waste exhibiting the characteristics of Ignitability, Corrosivity or Reactivity Present? No

Wastes Incompatible with backfill, seal and panel closure materials, container and packaging materials,shipping container or other wastes? No

Impenetrable Dense Objects? No

Waste Material Items

Packaging Materials

Material Item	Quantity	Unit	Unit Wt(lbs)	Item Wt(lbs)
Drum plastic bag	1.000	EACH	1.000	1.000
55-GAL DRUM (17c)	1.000	EACH	59.000	59.000

Waste Items byWeight

Material Item	Quantity	Unit	Unit Wt(lbs)	Item Wt(lbs)
snaps, zippers, misc metals	1.000	EACH	3.000	3.000
plastic sheeting, bagging	1.000	EACH	15.000	15.000
Plastic bag for waste	1.000	EACH	0.250	0.250

Batch Id RTR14-00086 **Container Id** 10351625 **Analysis Id** 0000096666

Waste Items by Volume

Material Item	Quantity	Unit	Unit Wt(lbs)	Item Wt(lbs)
Oil-Dri (Inside 55 gal drum)	25.000	PINTS	0.420	10.500

Waste Parameters

Waste Parameter	Remaining Weight %	Actual Weight Lbs
Iron-based Metals/Alloys	0.000	3.000
Aluminum-based Metals/Alloys	0.000	0.000
Other metals	0.000	0.000
Other Inorganic Materials	0.000	10.500
Cellulosics	100.000	42.135
Rubber	0.000	0.000
Plastic (Waste Materials)	0.000	15.250
Inorganic matrix	0.000	0.000
Organic matrix	0.000	0.000
Soils/gravel	0.000	0.000
Steel (packaging materials)	0.000	142.000
Plastic (packaging materials)	0.000	1.000
Cellulosics Packaging	0.000	0.000
MLLW Waste	0.000	0.000

Analysis Esignature History

Esig Approval Id	User Id	Esignature Date	Comment
2745140	CHINKLE	30-APR-2014 05:12	Batch is promoted. chd 4/30/14
2744707	CSIMMONS	29-APR-2014 14:29	
2743942	CHINKLE	28-APR-2014 15:09	This batch is returned for rework. AK does not concur with the recommended IDC change for containers 10514677, 10514676, 10514674, 10514425, 10514419, 10513714, 10490226, 10490092, 10356098, 10355921, 10355920, 10355860, 10353586, 10351625, 10350049, 10350015 and 10229930. CHD 04/28/14
2734830	DMOORE	17-APR-2014 15:54	

Batch Id RTR14-00086 **Container Id** 10350049 **Analysis Id** 0000096668

Container Type C drum, 83 Gallon **Analysis Status** Pass

RTR Date 17-APR-2014 16:14 **Gross Weight** 213.885 Lbs **Net Weight** 71.885 Lbs

Equipment Z-213-106 **Waste Matrix Code** S3900 **IDC** SD-176 Pre-1980 INL-Exhumed SDA

Recording Id 2RTR14-00058 **Procedure Id** INST-OI-12 **Revision** Homogeneous Solids

Is Test Pattern Resolution Ok? Yes **Start Side** A **Replicate** 53 **Approval Level** SPM

Audio Visual Ok? Yes **Operator** No **OIO** No

Result Comment DMOORE

Waste appears to be two fiber packs. Oil Dri between drums.
AK does not concur with the recommended IDC UN-00B for container 10350049 because RTR-SME indicates no waste in fiber packs. Instead, per S. Carpenter, AK recommends an IDC of SD-176 for the oil-dri. CHD 04/28/14
Rework: Corrected IDC per AK comment. cjs 04/29/14
AK concurs with the recommended IDC, SD-176, for container 10350049. No AKR or NCR is necessary. CHD 04/30/14
(rework) Disregard operator's description of the waste, Per RTR SME, waste is primarily Oil-Dri between the 55 gallon drum and the 83 gallon drum. Updated Remaining Contents of Container, removed Oil-Dri from Waste Parameters. KH 04MAY14

Package

IDC Correct Yes **Recommended IDC** SD-176 **Summary Category** S3000

Idc Change Reason Per AK

Rigid Liner Present? No **LinerType** NO LINER

Liner Punctured? N/A **Sharp Objects?** No

Liner Lid Present? No **Sharp Objects Are Protected?** Yes

Liner Lid Deformed? N/A **Layers Of Confinement** 2

Fill Factor 65

Bag Closure Method Twisted and Taped

Liquids

Liquid Present? No **Internal Container with Liquid** No

Internal Container with Liquid 0 pints **LA Candidate** No

Liquid Between Liner & Drum 0 pints **Containerized Liquid**

Total Liquid Amount 0 pints **Containerized Liquid Amt** 0 pints

Other Liquids 0 pints **Comment**

Prohibited Liquids Present No **Comment**

Contents-Drum or Box

	Value	Comment		Value	Comment
Lead?	No		**Mercury Present?**	No	
Wet Cell Batteries?	No		**Explosives?**	No	
Prohibited Compressed Gases?	No		**PCBs Present?**	No	
Aerosol Cans?	No		**PCB Mass (lbs)**	0	
Non-Mixed Hazardous Waste Present?	No		**Sealed Containers Over 4L?**	No	

Non-Radionuclide Pyrophoric Materials Present? No

Waste exhibiting the characteristics of Ignitability, Corrosivity or Reactivity Present? No

Wastes Incompatible with backfill, seal and panel closure materials, container and packaging materials,shipping container or other wastes? No

Impenetrable Dense Objects? No

Waste Material Items

Packaging Materials

Material Item	Quantity	Unit	Unit Wt(lbs)	Item Wt(lbs)
55-GAL DRUM (17c)	1.000	EACH	59.000	59.000

Batch Id RTR14-00086 **Container Id** 10350049 **Analysis Id** 0000096668

Waste Items byWeight

Material Item	Quantity	Unit	Unit Wt(lbs)	Item Wt(lbs)
other plastic bagging around 55 gallon drum	1.000	EACH	8.000	8.000
metal rings around packs	1.000	EACH	4.000	4.000
Fiber pack	2.000	EACH	6.000	12.000
Plastic bag for waste	4.000	EACH	0.250	1.000

Waste Items bv Volume

Material Item	Quantity	Unit	Unit Wt(lbs)	Item Wt(lbs)

Waste Parameters

Waste Parameter	Remaining Weight %	Actual Weight Lbs
Iron-based Metals/Alloys	0.000	4.000
Aluminum-based Metals/Alloys	0.000	0.000
Other metals	0.000	0.000
Other Inorganic Materials	100.000	46.885
Cellulosics	0.000	12.000
Rubber	0.000	0.000
Plastic (Waste Materials)	0.000	9.000
Inorganic matrix	0.000	0.000
Organic matrix	0.000	0.000
Soils/gravel	0.000	0.000
Steel (packaging materials)	0.000	142.000
Plastic (packaging materials)	0.000	0.000
Cellulosics Packaging	0.000	0.000
MLLW Waste	0.000	0.000

Analysis Esignature History

Esig Approval Id	User Id	Esignature Date	Comment
2748053	KHUGHES	04-MAY-2014 10:53	
2745141	CHINKLE	30-APR-2014 05:12	Batch is promoted. chd 4/30/14
2744704	CSIMMONS	29-APR-2014 14:28	
2743943	CHINKLE	28-APR-2014 15:09	This batch is returned for rework. AK does not concur with the recommended IDC change for containers 10514677, 10514676, 10514674, 10514425, 10514419, 10513714, 10490226, 10490092, 10356098, 10355921, 10355920, 10355860, 10353586, 10351625, 10350049, 10350015 and 10229930. CHD 04/28/14
2734845	DMOORE	17-APR-2014 16:14	

-----End of RTR Analysis Report-----

AMWTP
Advanced Mixed Waste Treatment Project

AMWTP

Checklist Report

Date: 12-Sep-2014
Time: 13:36

Batch Id RTR14-00086 **Open Date** 16-APR-14 **Close Date** 17-APR-14

Reviewer JAY SIMONSON **Approval Level** Independent Technical Reviewer
Approval Date 04-MAY-14 **Review Iteration** 1

Question Text	Answer	Requirement	Comment
1. Is the Batch Data Report (BDR) and Quality Assurance (QA) documentation complete with the following: o Real-Time Radiography (RTR) Batch Coversheet o Table of Contents (manual review only) o RTR Analysis reports o Replicate Scan o Replicate Comparison o Independent Observation o ITR checklist (Form-1412, manual review only) o Form-1491, Batch Data Report Supplemental Comment Form (manual review only) o Associated NCRs (referenced in Waste Tracking System [WTS]) o Audio/Video Recording References?	Yes		
2. Are there 20 containers or less in the batch?	Yes		
3. Was the image quality indicator (IQI) satisfactory?	Yes		
4. Does every container in the batch reference an audio/video recording?	Yes		
5. Is there a completed radiography data analysis for each container in the batch?	Yes		
6. Was each RTR Operator qualified at the time of the radiography event?	Yes		
7. Was the data generated in a technically correct manner using the correct revision of INST-OI-12, Real-Time Radiography Operations (Drum)?	Yes		
8. Was the correct procedure and revision documented on all analysis reports?	Yes		
9. Has the E-signature History review been performed?	Yes		
10. Does the RTR operator confirm that the physical form matched the waste stream description and waste matrix code?	Yes		See individual drum Result Comments.
11. Does the packaging weight plus the net weight equal the gross weight of the container in the estimated waste material parameters?	Yes		
12. Were all entries into the waste material items section assigned to the correct waste material parameters?	Yes		
13. Has the description of rigid liners and layers of confinement been properly documented, as applicable?	Yes		
14. Was the presence or absence of prohibited items properly documented?	Yes		
15. If prohibited items were identified, have appropriate nonconformance reports (NCRs) been generated?	Yes		See NCR report.
16. Were the containers examined between October and April in compliance with the preheat requirements?	Yes		
17. Were all proper units and significant figures used for all reported volumes/weights?	Yes		
18. Was there a valid replicate scan performed (at least one container per day, or once per testing batch,	Yes		On 16-Apr-2014 a qualified operator performed the Replicate analysis for batch RTR14-00086 on

Batch Id RTR14-00086 **Open Date** 16-APR-14 **Close Date** 17-APR-14

Reviewer JAY SIMONSON **Approval Level** Independent Technical Reviewer

Approval Date 04-MAY-14 **Review Iteration** 1

Question Text	Answer	Requirement	Comment
whichever is less frequent)? o Record the container number, the replicate observation date in the comment section of this checklist. o Record any issues or concerns in the batch comment section.			container 10350015. There were differences in the Fill Factor and the Waste Items by Weight between the Original analysis and the Replicate analysis. Original Operator entered 70% Fill Factor, but the Replicate Operator entered 90%. These differences do not affect the original disposition of the drum or the DQOs. I agree with the Original Operator. No rework will be performed on the Replicate analysis. The difference in the Waste Matrix Code between the Original and Replicate on the Replicate Comparison report is due to the final IDC determination by AK and is not considered to be a significant difference.
19. Was there a valid Operator Independent Observation (OIO) (not the replicate) performed (at least one container per day, or once per testing batch, whichever is less frequent)? o Record the container number and the OIO date in the comment section of this checklist. o Record any issues or concerns in the batch comment section.	Yes		On 16-Apr-2014 a qualified operator performed the OIO analysis for batch RTR14--00086 on container 10355920. There were differences in The Fill Factor and the Waste Items by Weight between the Original analysis and the OIO analysis. These differences do not affect the original disposition of the drum or the DQOs. I agree with the Original Operator. No rework will be performed on the OIO analysis. Original Operator called the waste Plastic (Waste Materials) but the OIO Operator called the waste Cellulosics. This is not considered a significant difference since both waste parameters are allowed in IDC SD-177.
20. Were any significant differences identified that would affect the original disposition of the replicate and OIO, or affect data quality objectives (DQOs)? If so, ensure an NCR was generated and WTS flagged.	No		
21. Were the RTR quality assurance objectives (QAOs) met? o Precision o Accuracy o Completeness o Comparability	Yes		
22. Were any NCRs generated for containers containing prohibited items, or any non-conforming conditions that failed to meet DQOs or QAOs? o If so, include the NCRs, as appropriate, in the BDR.	Yes		See NCR report.
23. Were the rework requirements clearly identified in WTS or on the BDR?	Yes		See batch comments.

Batch Id RTR14-00086 **Open Date** 16-APR-14 **Close Date** 17-APR-14

Reviewer JAY SIMONSON **Approval Level** Independent Technical Reviewer

Approval Date 04-MAY-14 **Review Iteration** 2

Question Text	Answer	Requirement	Comment
1. Is the Batch Data Report (BDR) and Quality Assurance (QA) documentation complete with the following: o Real-Time Radiography (RTR) Batch Coversheet o Table of Contents (manual review only) o RTR Analysis reports o Replicate Scan o Replicate Comparison o Independent Observation o ITR checklist (Form-1412, manual review only) o Form-1491, Batch Data Report Supplemental Comment Form (manual review only) o Associated NCRs (referenced in Waste Tracking System [WTS]) o Audio/Video Recording References?	Yes		
2. Are there 20 containers or less in the batch?	Yes		
3. Was the image quality indicator (IQI) satisfactory?	Yes		
4. Does every container in the batch reference an audio/video recording?	Yes		
5. Is there a completed radiography data analysis for each container in the batch?	Yes		
6. Was each RTR Operator qualified at the time of the radiography event?	Yes		
7. Was the data generated in a technically correct manner using the correct revision of INST-OI-12, Real-Time Radiography Operations (Drum)?	Yes		
8. Was the correct procedure and revision documented on all analysis reports?	Yes		
9. Has the E-signature History review been performed?	Yes		
10. Does the RTR operator confirm that the physical form matched the waste stream description and waste matrix code?	Yes		See individual drum Result Comments.
11. Does the packaging weight plus the net weight equal the gross weight of the container in the estimated waste material parameters?	Yes		
12. Were all entries into the waste material items section assigned to the correct waste material parameters?	Yes		
13. Has the description of rigid liners and layers of confinement been properly documented, as applicable?	Yes		
14. Was the presence or absence of prohibited items properly documented?	Yes		
15. If prohibited items were identified, have appropriate nonconformance reports (NCRs) been generated?	Yes		See NCR report.
16. Were the containers examined between October and April in compliance with the preheat requirements?	Yes		
17. Were all proper units and significant figures used for all reported volumes/weights?	Yes		
18. Was there a valid replicate scan performed (at least one container per day, or once per testing batch,	Yes		On 16-Apr-2014 a qualified operator performed the Replicate analysis for batch RTR14-00086 on

Batch Id RTR14-00086 **Open Date** 16-APR-14 **Close Date** 17-APR-14

Reviewer JAY SIMONSON **Approval Level** Independent Technical Reviewer

Approval Date 04-MAY-14 **Review Iteration** 2

Question Text	Answer	Requirement	Comment
whichever is less frequent)? o Record the container number, the replicate observation date in the comment section of this checklist. o Record any issues or concerns in the batch comment section.			container 10350015. There were differences in the Fill Factor and the Waste Items by Weight between the Original analysis and the Replicate analysis. Original Operator entered 70% Fill Factor, but the Replicate Operator entered 90%. These differences do not affect the original disposition of the drum or the DQOs. I agree with the Original Operator. No rework will be performed on the Replicate analysis. The difference in the Waste Matrix Code between the Original and Replicate on the Replicate Comparison report is due to the final IDC determination by AK and is not considered to be a significant difference.
19. Was there a valid Operator Independent Observation (OIO) (not the replicate) performed (at least one container per day, or once per testing batch, whichever is less frequent)? o Record the container number and the OIO date in the comment section of this checklist. o Record any issues or concerns in the batch comment section.	Yes		On 16-Apr-2014 a qualified operator performed the OIO analysis for batch RTR14--00086 on container 10355920. There were differences in The Fill Factor and the Waste Items by Weight between the Original analysis and the OIO analysis. These differences do not affect the original disposition of the drum or the DQOs. I agree with the Original Operator. No rework will be performed on the OIO analysis. Original Operator called the waste Plastic (Waste Materials) but the OIO Operator called the waste Cellulosics. This is not considered a significant difference since both waste parameters are allowed in IDC SD-177.
20. Were any significant differences identified that would affect the original disposition of the replicate and OIO, or affect data quality objectives (DQOs)? If so, ensure an NCR was generated and WTS flagged.	No		
21. Were the RTR quality assurance objectives (QAOs) met? o Precision o Accuracy o Completeness o Comparability	Yes		
22. Were any NCRs generated for containers containing prohibited items, or any non-conforming conditions that failed to meet DQOs or QAOs? o If so, include the NCRs, as appropriate, in the BDR.	Yes		See NCR report.
23. Were the rework requirements clearly identified in WTS or on the BDR?	Yes		See batch comments.

Batch Id RTR14-00086 **Open Date** 16-APR-14 **Close Date** 17-APR-14

Reviewer DAVE MARQUARDT **Approval Level** SPM Data Validation

Approval Date 07-MAY-14 **Review Iteration** 1

Question Text	Answer	Requirement	Comment
(1) Has the batch received a Data Generation Level Independent Technical Review?	Yes	MP-TRUW-8.2, C3-10b(1)	
(2) Is the Independent Technical Review checklist complete?	Yes	MP-TRUW-8.2, C3-10b(1)	
(3) When identified, were polychlorinated biphenyls (PCBs), mercury, lead, or other hazardous contaminants consistent with the waste stream acceptable knowledge (AK) Summary Report(s) and/or AK documentation?	Yes	MP-TRUW-8.2, C4-3	
(4) Are any ignitable, corrosive, or reactive wastes identified in this waste?	No	MP-TRUW-8.2, C4-3	
(5) Are the packaging configurations identified on the real-time radiography (RTR) consistent with the waste stream AK Summary Report(s) and/or AK documentation?	Yes	MP-TRUW-8.2, C4-3	
(6) Do the containers in this batch contain typical waste items consistent with waste stream AK Summary Report(s) and/or AK documentation?	Yes	MP-TRUW-8.2, C4-3	
(7) Are the Waste Matrix Codes (WMCs) and physical form descriptions consistent with AK?	Yes	MP-TRUW-8.2, C4-3	
(8) Have all AK discrepancies been resolved and have all AK Resolution checklists been approved? Reference all waste stream AK documentation used in review of this data package.	N/A	MP-TRUW-8.2, C4-3	No discrepancies. RPT-TRUW-05. RPT-TRUW-06. RPT-TRUW-12. RPT-TRUW-56.
(9) Have all applicable Quality Assurance Objectives (QAOs) been met, including precision, accuracy, completeness, and comparability, by using the appropriate acceptance criteria for each as specified in MP-TRUW-8.2, Quality Assurance Project Plan Section C3-4? Precision ¿ Verified prior to use by tuning precisely enough to demonstrate compliance with QAOs through viewing an image test pattern, as evidenced by a satisfactory Image Quality Indicator (IQI). ¿ Have discrepancies, if any, between radiography operators been reconciled? Accuracy ¿ Use of a target to tune the image for maximum sharpness as evidenced by a satisfactory IQI and by requiring operators to successfully identify 100% of the required items in a training container during initial and subsequent qualifications. Completeness ¿ An audio/videotape (or equivalent media) of the radiography examination and a validated radiography data form will be obtained for 100% of the retrievably stored waste container in the program for all waste containers subject to radiography. Comparability ¿ Use of standardized radiography procedures and operator qualifications.	Yes	MP-TRUW-8.2, C3-4a	
(10) Do the waste container contents match the WMC, waste stream description and identify the absence of prohibited items?	Yes	MP-TRUW-8.2, C1-3 and B3-11	

Batch Id RTR14-00086 **Open Date** 16-APR-14 **Close Date** 17-APR-14

Reviewer DAVE MARQUARDT **Approval Level** SPM Data Validation
Approval Date 07-MAY-14 **Review Iteration** 1

Question Text	Answer	Requirement	Comment
(11) If residual liquids exist in the container, is an estimate of quantity given?	Yes	MP-TRUW-8.2, C1-3	
(12) Do the individual container reports contain the (a) IDC, (b) Waste Matrix Code, (c) audio/video recording reference, (d) gross container weight, (e) waste material parameter weights, and (f) signature and date of examination?	Yes	MP-TRUW-8.2, C1-3 and C3-11a	
(13) Have the IDC, WMC, and/or waste stream for all containers in the batch remained the same as originally assigned by the historical designation? If not, note the container number in the comment field and notify the Acceptable Knowledge Expert (AKE) if NCR does not exist on the WMC and IDC change.	No	MP-TRUW-8.2, C1-3 and C3-4a	All drums except 10405601 came to RTR with no historical information or were an unknown IDC. No AKR's were generated.
(14) Was a replicate scan performed by an independent operator on at least one container per day or once per testing batch, whichever is less frequent, by a qualified radiography operator that was not involved in the original scan of the waste container?	Yes	MP-TRUW-8.2, B1-3, C3-4a, and C3-10b(1)	
(15) Has an independent observation of one scan (not the replicate) been performed by a qualified operator that was not involved in the original scan of the waste container, at a rate of once per day or once per batch, whichever is less frequent? Record date of observation and any issues or concerns in the comment section.	Yes	MP-TRUW-8.2, C1-3 and C3-4a	On 16-Apr-2014 a qualified operator performed the OIO analysis for batch RTR14--00086 on container 10355920. No issues.
(16) Did personnel having current qualifications perform all RTR examinations?	Yes	MP-TRUW-8.1, Appendix F	
(17) Verify the correct procedure and revision number were used for all containers in this batch.	Yes	MP-TRUW-8.2, C3-4a	
(18) Verify the audio and video checks were performed and are satisfactory.	Yes	MP-TRUW-8.2, C3-4a	
(19) Verify that there are 20 or fewer containers in the batch.	Yes	MP-TRUW-8.2, C1-3	
(20) Does the data for all containers within this batch meet the review, validation, and verification requirements? · Are proper units (e.g. Liters or pounds) and significant figure used? · Is the BDR complete (all pages identified in the BDR and numbered accordingly)? - RTR Batch Coversheet - Table of Contents (manual review only) - RTR Analysis reports - Replicate Scan - Replicate Comparison - Independent Observation - Form-1412, ITR checklist - Associated NCRs - Form, 1491, Batch Data Report Supplemental Comment Form, as applicable - Audio/Video Recording References	Yes	MP-TRUW-8.2, C3 10b(2)	
(21) Review all NCR(s) (open and closed). Can the batch be approved?	Yes	MP-TRUW-8.2, C3-13	
(22) Is all data associated with this BDR acceptable for signature release?	Yes	MP-TRUW-8.2, C3 10b(2)	

Batch Id RTR14-00086 **Open Date** 16-APR-14 **Close Date** 17-APR-14

Esignature History

Esig Approval ID	User ID	Esig Date	Approval Level	Comments
2750244	DMARQUARDT	07-MAY-14	SPM	Reviewed and validated. Approve.
2748067	JSIMONSON	04-MAY-14	ITR	Promoted to SPM.
2748046	JSIMONSON	04-MAY-14	ITR	Demoted to Operations for rework.

AMWTP
Advanced Mixed Waste Treatment Project

AMWTP

Non-Conformance Report

Date: 12-Sep-2014

Time: 13:37

*****Batch NCR(s)*****

Batch Type	RTR	Batch ID	RTR14-00086		
Trackwise Number		**Status**		**Opened Date**	**Closed Date**

*****Container NCR(s)*****

Container ID *or related Batch ID*	Trackwise Number	Status	Opened Date	Closed Date
10229930	85220	OPEN	16-APR-14	
10229930	85223	OPEN	17-APR-14	
10353586	85226	OPEN	17-APR-14	
10353586	85228	OPEN	17-APR-14	
10355860	85231	CLOSED	17-APR-14	28-JUL-14
10405601	85241	CLOSED	17-APR-14	30-JUN-14

*****End of Non-Conformance Report*****

AMWTP

Advanced Mixed Waste Treatment Project

AMWTP

RTR Replicate Comparison Report

Date: 12-Sep-2014

Time: 13:38

RTR Batch Id: RTR14-00086 **Container Id:** 10350015 **Equipment Id:** Z-213-106

Container type Description: **drum, 83 Gallon** Gen-IDC: **SD-177** Gross Weight(Lbs): **202.86**

	Original Analysis		Replicate Analysis	
Analysis Id / Date:	0000096634	16-APR-2014 12:15	0000096638	16-APR-2014 14:16
Procedure /Revision:	INST-OI-12	53	INST-OI-12	53
Recording Media Id:	2RTR14-00058		2RTR14-00058	
Starting Position:	A		A	
Is Test Pattern Resolution Ok?	Y		Y	
Audio Visual Ok?	Y		Y	
Personnel Name:	CRAIG SIMMONS		DIANNA MOORE	
IDC Ok? / Recommended IDC:	Y	SD-177	Y	
IDC Change Reason:	Per AK			
Summary Category / Waste matrix Code:	S5000	S5490	S5000	S5900
Packaging				
Rigid Liner Present?	N		N	
Liner Type Code:	NO LINER		NO LINER	
Liner Punctured:	NA		NA	
Liner Lid Deformed:	NA		NA	
Layers Of Confinement:	3		3	
Sharp Objects?	N		N	
Sharp Objects Protected?	Y		Y	
Fill Factor(%):	70		90	
Bag Closure Method:	Twisted and Taped		Twisted and Taped	
Liner Lid Present?:	N		N	
Liquids: (Volume in Pints)				
Liquid Present?	N		N	
Internal Container with Liquid?	0		0	
Containerized Liquid	N		N	
Other Liquids:	0		0	
Internal Container with Liquid Amt:	0		0	
Liquid Between Liner and Drum:	0		0	
Containerized Liquid:	0		0	
Total Liquid Amount:	0		0	
LA Candidate?	N		N	
Prohibited Liquids Present?	N		N	

Contents:	Y/N	Comments	Y/N	Comments
Sealed Containers over 4L?	N		N	
Lead Present?	N		N	
Explosives Present?	N		N	
Mercury Present?	N		N	
Wet Cell Batteries Detected?	N		N	

AMWTP

Advanced Mixed Waste Treatment Project

AMWTP

RTR Replicate Comparison Report

Date: 12-Sep-2014

Time: 13:38

RTR Batch Id: RTR14-00086 **Container Id:** 10350015 **Equipment Id:** Z-213-106

	Original Analysis	Replicate Analysis
Prohibited Compressed Gas Present	N	N
PCBs Present?	N	N
PCB Mass (lbs)	0	0
Non-Radionuclide Pyrophoric Materials Present?	N	N
Waste exhibiting the characteristics of ignitability, Corrosivity or reactivity Present?	N	N
Non-Mixed Hazardous Waste Present	N	N
Waste Incompatibles with backfill, Seal and panel closure materials, container and packaging material, shipping container or other wastes?	N	N
Impenetrable Dense Objects?	N	N
Result Comment:	Contents of this drum is primarily plastic bagging and PPE. AK does not concur with the recommended IDC UN-00B for container 10350015 because waste is SDA debris. Instead, AK recommends an IDC of SD-177. CHD 04/28/14 Rework: Corrected IDC per AK comment. cjs 04/29/14 AK concurs with the recommended IDC, SD-177, for container 10350015. No AKR or NCR is necessary. CHD 04/30/14	Remaining waste appears to be plastic sheeting, bagging, and poly bottle.

E-signature

Esig Approval ID	User ID	Signature Date	Comment
2746656	JSIMONSON	02-MAY-14	The difference in the Waste Matrix Code between the Original and Replicate on the Replicate Comparison report is due to the final IDC determination by AK an is not considered to be a significant difference. ITR Replicate Comparison complete.

-----End of RTR Replicate Comparison Report-----

AMWTP
Advanced Mixed Waste Treatment Project

AMWTP

RTR OIO Comparison Report

Date: 12-Sep-2014

Time: 13:38

RTR Batch Id: RTR14-00086 **Container Id:** 10355920 **Equipment Id:** Z-213-106

Container type Description: **drum, 83 Gallon** Gen-IDC: **SD-177** Gross Weight(Lbs): **183.015**

	Original Analysis		OIO Analysis	
Analysis Id / Date:	0000096632	16-APR-2014 11:56	0000096637	16-APR-2014 13:43
Procedure /Revision:	INST-OI-12	53	INST-OI-12	53
Recording Media Id:	2RTR14-00058		2RTR14-00058	
Starting Position:	A		A	
Is Test Pattern Resolution Ok?	Y		Y	
Audio Visual Ok?	Y		Y	
Personnel Name:	CRAIG SIMMONS		DIANNA MOORE	
IDC Ok? / Recommended IDC:	Y	SD-177	Y	
IDC Change Reason:	Per AK			
Summary Category / Waste matrix Code:	S5000	S5490	S5000	S5900
Packaging				
Rigid Liner Present?	N		N	
Liner Type Code:	NO LINER		NO LINER	
Liner Punctured:	NA		NA	
Liner Lid Deformed:	NA		NA	
Layers Of Confinement:	2		2	
Sharp Objects?	N		N	
Sharp Objects Protected?	Y		Y	
Fill Factor(%):	90		95	
Bag Closure Method:	Twisted and Taped		Twisted and Taped	
Liner Lid Present?:	N		N	
Liquids: (Volume in Pints)				
Liquid Present?	N		N	
Internal Container with Liquid?	0		0	
Containerized Liquid	N		N	
Other Liquids:	0		0	
Internal Container with Liquid Amt:	0		0	
Liquid Between Liner and Drum:	0		0	
Containerized Liquid:	0		0	
Total Liquid Amount:	0		0	
LA Candidate?	N		N	
Prohibited Liquids Present?	N		N	

Contents:	Y/N	Comments	Y/N	Comments
Sealed Containers over 4L?	N		N	
Lead Present?	N		N	
Explosives Present?	N		N	
Mercury Present?	N		N	
Wet Cell Batteries Detected?	N		N	

RTR Batch Id: RTR14-00086 **Container Id: 10355920** **Equipment Id: Z-213-106**

	Original Analysis	OIO Analysis
Prohibited Compressed Gas Present	N	N
PCBs Present?	N	N
PCB Mass (lbs)	0	0
Non-Radionuclide Pyrophoric Materials Present?	N	N
Waste exhibiting the characteristics of ignitability, Corrosivity or reactivity Present?	N	N
Non-Mixed Hazardous Waste Present	N	N
Waste Incompatibles with backfill, Seal and panel closure materials, container and packaging material, shipping container or other wastes?	N	N
Impenetrable Dense Objects?	N	N
Result Comment:	Contents of this drum is primarily plastic bagging. AK does not concur with the recommended IDC UN-00B for container 10355920 because waste is SDA debris. Instead, AK recommends an IDC of SD-177. CHD 04/28/14 Rework: Corrected IDC per AK comment. cjs 04/29/14 AK concurs with the recommended IDC, SD-177, for container 10355920. No AKR or NCR is necessary. CHD 04/30/14	Remainng waste appears to be paper, rags, and PPE.

----------E-signature----------

Esig Approval ID	User ID	Signature Date	Comment

-----End of RTR OIO Comparison Report-----

AMWTP
Advanced Mixed Waste Treatment Project

NON-CONFORMANCE REPORT

WIPP DATA - RTR

NCR #: 85226

Title: RTR Characterization	
Originator: Tiegs, Cindy	**Date Opened:** 04/17/14
Responsible Dept: Plant Manager	**Batch #:** RTR14-00086
Container ID: 10353586	**Tag Applied:** Yes
Characterization Problem:	
Originator Sign By: Cindy Tiegs	**Originator Sign Date:** 04/17/14
Production Comments: Approx 5.50 pints liquid in bagging through out the waste.	**Approved Remediation:**
Performed By:	**Performed Date:**
Waste Programs Evaluation/Verification:	
SPM Verification Complete By:	**SPM Verification Complete Date:**
MLLW/LLW Verification Complete By:	**MLLW/LLW Verification Complete Date:**
QA Closure Comments:	
QA Add'l Action Reqd By:	**QA Add'l Action Reqd Date:**
QA Verification Complete By:	**QA Verification Comp Date:**

AMWTP
Advanced Mixed Waste Treatment Project

NON-CONFORMANCE REPORT

WIPP DATA - RTR

NCR #: 85228

Title: RTR Characterization	
Originator: Tiegs, Cindy	**Date Opened:** 04/17/14
Responsible Dept: Plant Manager	**Batch #:** RTR14-00086
Container ID: 10353586	**Tag Applied:** Yes
Characterization Problem:	
Originator Sign By: Cindy Tiegs	**Originator Sign Date:** 04/17/14
Production Comments: impenetrable waste at bottom of drum.	**Approved Remediation:**
Performed By:	**Performed Date:**
Waste Programs Evaluation/Verification:	
SPM Verification Complete By:	**SPM Verification Complete Date:**
MLLW/LLW Verification Complete By:	**MLLW/LLW Verification Complete Date:**
QA Closure Comments:	
QA Add'l Action Reqd By:	**QA Add'l Action Reqd Date:**
QA Verification Complete By:	**QA Verification Comp Date:**

AMWTP

Advanced Mixed Waste Treatment Project

AMWTP

Batch Report Coversheet

Date: 12-Sep-2014

Time: 13:46

GEN2

Batch Type VE Boxline

Batch Id VEB13-00526

Batch Status AP

Test Facility Idaho AMWTP

Equipment Id VE DiD RPCK VE Drum Repackaging Into Drums

Batch Report No. VEB13-00526

Open Date 22-DEC-13 19:42:29

Close Date 22-DEC-13 19:42:47

Container Id	IDC	Analysis Id	Date Examined	QC Type	Analysis Status	Operator
10507242	BN-516	0000313728	22-DEC-13 19:42:30	Original	P	JENNY CUMMINS

INFORMATION ONLY

**********Batch Comments**********

Written By	Date	Comment
JCUMMINS	22-DEC-13 19:42:48	Esigned.
LJWALKER	24-DEC-13 06:53:46	Initial Review
LJWALKER	24-DEC-13 07:24:39	Review Complete
CROJAS	21-JAN-14 09:30:24	Validation Complete. Promote Batch

**********Batch E-Signature History**********

Approval ID	User ID	Signature Date	Comment
2670782	JCUMMINS	22-DEC-2013 19:42:48	
2670949	LJWALKER	24-DEC-2013 07:24:39	Review Complete
2677691	CROJAS	21-JAN-2014 09:30:24	Validation Complete. Promote Batch

***** End of Batch Report Coversheet Report *****

AMWTP
Advanced Mixed Waste Treatment Project

AMWTP

VE Boxline and Repackaging Report

Date: 12-Sep-2014
Time: 13:47

Batch Id VEB13-00526 **Container Id** 10507242 **Analysis Id** 0000313728

VE Date 22-DEC-13 19:42:30 **Analysis Status** Pass
Gen-IDC Code BN-516 WMF-676 Inorganic Homogeneous Solids **VE Weight** 57.33 lbs
Closure Date 22-DEC-13 19:42:30 **Procedure Id** INST-FOI-17 **Net Weight** 31.33 lbs
Container Type 55 **Revision** 27
Operator 1 JENNY CUMMINS **Waste Matrix** S3900 **Summary Category Group** S3000
Operator 2 JARED LANDON **Equipment ID** VE DiD RPCK

General

Rigid Liner Present? No **Liner Type** NO LINER **Closure Method** No Bags
Liner Punctured? Yes **Layers Of Confinement** 0 **Fill Factor** 10 % **Liner Lid Present** No

Liquids

Liquids Present? No **Comment**

Liquid Between Liner and Drum 0 pints
Containerized Liquid pints
Internal Container with Liquid 0 pints
Other Liquids 0 pints
Total Liquid Amount 0 pints

Internal Container with Liquid No

Prohibited Liquids Present No

Containerized Liquid

Contents

Sharp Objects? No **Are Sharp Objects Protected?** Yes

	Value	*Comment*
Prohibited Compressed Gas Present?	No	
Explosives Present?	No	
Pyrophorics Present?	No	
Mercury Present?	No	
PCBs Present?	No	
PCB Mass (lbs)	0	
Wet Cell Batteries Present?	No	
Corrosives,Ignitables or Reactives Present?	No	
Beryllium Contaminates Present?	No	
Hazardous-Only Waste Present?	No	
Is Waste Incompatible with backfill, packaging materials, or shipping container materials?	No	
Sealed Containers Over 4L?	No	

IDC Verification

Is IDC correct? No **Recommended IDC** BN-516 WMF-676 Inorganic Homogeneous Solids
IDC Change Reason Per HWD-071511-01
Visual Exam Comment The remaining waste by weight percent is 100% other inorganic matrix consisting of supercompator glovebox

Batch Id VEB13-00526 **Container Id** 10507242 **Analysis Id** 0000313728

scrappings. During the sump cycle #1480 Bettis waste was compacted.

---Source Container---

Is there a source container? No

Source Container ID	Location	IDC

---IDC CODES---

Current Container IDC Code: BN-516 **Recommended IDC Code:** BN-516

--- Waste Material Items---

---Packaging Materials---

Material Item	Quantity	Unit	Unit Wt	Item Wt(lbs)

---Waste Items by Weight---

Material Item	Quantity	Unit	Unit Wt	Item Wt(lbs)
15 ml Glove	2.000	EACH	0.400	0.800

---Waste Items by Volume---

Material Item	Quantity	Unit	Unit Wt	Item Wt(lbs)
Plastic	1.000	PINTS	0.937	0.940

---Waste Parameters---

Waste Parameter	Remaining Weight %	Actual Weight Lbs
Iron-based Metals/Alloys	0.000	0.000
Aluminum-based Metals/Alloys	0.000	0.000
Other metals	0.000	0.000
Other Inorganic Materials	0.000	0.000
Cellulosics	0.000	0.000
Rubber	0.000	0.800
Plastic (Waste Materials)	0.000	0.940
Inorganic matrix	100.000	29.590
Organic matrix	0.000	0.000
Soils/gravel	0.000	0.000
Steel (packaging materials)	0.000	26.000
Plastic (packaging materials)	0.000	0.000
Cellulosics Packaging	0.000	0.000

---Esignature History---

Esig Approval Id	User Id	E-signature Date	Comment
2670780	JCUMMINS	22-DEC-13 19:42:31	
2670781	JLANDON	22-DEC-13 19:42:35	

------End of VE Boxline Report------

AMWTP
Advanced Mixed Waste Treatment Project

AMWTP
Checklist Report

Date: 12-Sep-2014
Time: 13:47

Batch Id VEB13-00526 **Open Date** 22-DEC-13 **Close Date** 22-DEC-13

Reviewer L.J. WALKER **Approval Level** Independent Technical Reviewer
Approval Date 24-DEC-13 **Review Iteration** 1

Question Text	Answer	Requirement	Comment
1. Is the QA documentation for the Batch Data Reports complete and includes data reports and QC results? o VE Batch Coversheet o Table of Contents (manual review only) o VE Analysis Reports o Analytical Balance Calibration Check Sheet (Form-1215), if applicable (manual review only) o ITR Checklist (Form-1415, manual review only) o Batch Data Report Supplemental Comment Form (Form-1491, manual review only) o Associated NCRs (referenced in WTS) o Audio/Video Recording References, if applicable	Yes		
2. Are there 20 containers or less in the batch?	Yes		
3. Was each VE Operator qualified at the time of the VE event?	Yes		
4. Was a VE data form completed for each container in the batch?	Yes		
Was the data generated in a technically correct manner using the correct revision of INST-OI-34, Non-facility Visual Examination or INST-FOI-17, Facility Visual Examination Operations, as applicable.	Yes		
6. Was the correct revision of the procedure documented on each analysis report?	Yes		
7. Was the E-signature History review performed?	Yes		
8. Was guidance from VEE documented, as applicable?	N/A		
9. Does every drum reported in the batch have a valid audio/video recording (as applicable)?	N/A		
10. Does the physical form match the waste stream description, waste matrix code and IDC?	Yes		
11. Did the VE event result in an IDC/Waste Matrix Code change? If so, was an NCR initiated?	No		
12. Were the waste material parameters documented correctly?	Yes		
13. Was the presence or absence of prohibited items properly identified? o If prohibited items were identified, were NCRs initiated?	Yes		
14. Has the description of rigid liners and layers of confinement been properly documented?	Yes		
15. Was the drum age criteria (DAC) entered correctly and completely? o Closure Method(s) o Liner Puncture Status o Layers of Confinement o Closure Date o Packaging Configuration o Type and number of filters, as applicable o Liner hole presence and diameter, as applicable	Yes		
16. Have filters been installed or removed from drum as recorded in WTS, as applicable?	N/A		

Batch Id VEB13-00526 **Open Date** 22-DEC-13 **Close Date** 22-DEC-13

Reviewer L.J. WALKER **Approval Level** Independent Technical Reviewer

Approval Date 24-DEC-13 **Review Iteration** 1

Question Text	Answer	Requirement	Comment
17. Hand calculations and unit conversions are correct? o Does the packaging weight plus the net weight equal the gross weight of the drum in the estimated waste material parameters, and for the unit conversions that are entered by volume or weight?	Yes		
18. Were all units and significant figures used correct for all reported volumes/weights?	Yes		
19. Has the data been reviewed for transcription errors as appropriate?	Yes		
20. Were the Visual Examination QAOs met? o Precision o Accuracy o Completeness o Comparability	Yes		
21. Is each data form signed by qualified VE Operators, as applicable per the appropriate procedure being used?	Yes		
22. Was the audio/video check satisfactory, as applicable?	N/A		
23. Was the scale or balance check weight event satisfactory, as applicable?	N/A		
24. Are the QC weight checks within the tolerance of the scale or balance, as applicable?	N/A		
25. Were any NCRs generated for drums containing prohibited items or any nonconforming conditions that failed to meet DQOs or QAOs? o Include the NCRs as appropriate, in the Batch Data Report.	No		
26. Were the rework requirements clearly identified in WTS or on the BDR?	N/A		

Batch Id VEB13-00526 **Open Date** 22-DEC-13 **Close Date** 22-DEC-13

Reviewer CESAR ROJAS **Approval Level** SPM Data Validation

Approval Date 21-JAN-14 **Review Iteration** 1

Question Text	Answer	Requirement	Comment
(1) Has the batch received a Data Generation Level Independent Technical Review?	Yes	MP-TRUW-8.2, C3-10b(1)	
(2) Are the batch data review checklists complete?	Yes	MP-TRUW-8.2, C3-10b(1)	
(3) When identified, were PCBs, mercury, lead, or other hazardous contaminants consistent with the waste stream AK Summary Report(s) and/or AK documentation?	N/A	MP-TRUW-8.2, C4-3	None identified.
(4) Are any ignitable, corrosive, or reactive wastes identified?	No	MP-TRUW-8.2, C4-3	
(5) Are the packaging configurations identified on the VE consistent with the waste stream AK Summary Report(s) and/or AK documentation?	Yes	MP-TRUW-8.2, C4-3	
(6) Do the drums in this batch contain typical waste items consistent with waste stream AK Summary Report(s) and/or AK documentation?	Yes	MP-TRUW-8.2, C4-3	
(7) Are the Waste Matrix Codes and physical form descriptions consistent with AK?	Yes	MP-TRUW-8.2, C4-3	
(8) Have all AK discrepancies been resolved and have all AK Resolution checklists been approved? Reference all waste stream AK documentation used in review of this data package.	N/A	MP-TRUW-8.2, C4-3	No discrepancies identified. Reference: AMWTP-RPT-TRUW-05, AMWTP-RPT-TRUW-06, and AMWTP-RPT-TRUW-83
(9) Does the batch report identify the correct implementing procedure number and revision number used for this testing method?	Yes	MP-TRUW-8.2, C3-4 and Table C3-11	
(10) Have the Waste Matrix Code (WMC) and IDC for all drums in the batch remained the same as originally assigned by the historical designation? NOTE: If not, note the drum number in the comment field and notify the Acceptable Knowledge Expert (AKE) if an NCR does not exist for the WMC and IDC change.	Yes	MP-TRUW-8.2, C-3c and C1-4	
(11) Does the physical form of the waste match the WMC, waste stream description, and identify the absence of prohibited items?	Yes	MP-TRUW-8.2, C-3c and C1-4	
(12) If observable liquids exist in the drum, is an estimate of quantity given?	N/A	MP-TRUW-8.2, C-3c and C1-4	No residual liquids exist.
(13) Precision: Have all discrepancies been reconciled between the operator and the ITR with regard to identification of WMC, liquids in excess of TSDF-WAC limits, and compressed gases?	Yes	MP-TRUW-8.2 C3-4b	
(14) Accuracy: Have all operators passed a comprehensive examination and demonstrated satisfactory performance in the presence of the VE expert during initial and subsequent qualifications?	Yes	MP-TRUW-8.2 C3-4b	
(15) Completeness: Has a validated VE data form been obtained for 100% of the waste containers subject to VE?	Yes	MP-TRUW-8.2 C3-4b	
(16) Comparability: Has the comparability of VE data from different operators been enhanced by use of standardized VE procedures and operator qualifications?	Yes	MP-TRUW-8.2 C3-4b	
(17) Does the data for all containers within this batch meet the review, validation, and verification requirements?	Yes	MP-TRUW-8.2, C3-10b and Table C3-11	

Batch Id VEB13-00526 **Open Date** 22-DEC-13 **Close Date** 22-DEC-13

Reviewer CESAR ROJAS **Approval Level** SPM Data Validation

Approval Date 21-JAN-14 **Review Iteration** 1

Question Text	Answer	Requirement	Comment
· Are proper units (e.g. Liters or pounds) and significant figure used? · Is the BDR complete (all pages identified in the BDR and numbered according)? - VE Batch Coversheet - Table of Contents (manual review only) - VE Analysis Reports - Analytical Balance Calibration Checklist (if applicable) - ITR Checklist (Form-1415) - Associated NCRs - Audio/Video Recordings (if applicable)			
(18) Do the drum reports contain the (a) Batch Data Report number and date, (b) waste container number (c)WMC, (d) implementing procedure and revision, (e) audio/video recording reference, (f) audio and video QC checks were performed and satisfactory, (g) verification that the physical form matches the waste stream description and WMC, (h) absence of prohibited items, (i) gross container weight, (j) waste material parameter weights, and (k) signature and date of examination (signatures of both operators when applicable)?	Yes	MP-TRUW-8.2, C1-4 and Table C3-11	Audio video record is not required for this type of Batch.
(19) Is the description of container contents detailed enough to provide verification of estimated weights for the waste matrix parameters identified?	Yes	MP-TRUW-8.2, C1-4 and Table C3-11	
(20) Is there a valid second weight check for every 10 items?	N/A	MP-TRUW-8.2, C1-4	Not required for VEB.
(21) Verification of two operator signatures when doing VE?	Yes	MP-TRUW-8.2, C-3d(1) and Table C3-11	
(22) Are there 20 or fewer containers in the batch?	Yes	MP-TRUW-8.2, C1-3 and C3-10	
(23) Review all NCRs (open and closed). Can the batch be approved?	Yes	MP-TRUW-8.2, C3-13	Open NCR # 82958
(24) All data associated with this BDR is acceptable for signature release?	Yes	MP-TRUW-8.2, C3-10b and C3-10b(1)	

Batch Id VEB13-00526 **Open Date** 22-DEC-13 **Close Date** 22-DEC-13

Esignature History

Esig Approval ID	User ID	Esig Date	Approval Level	Comments
2677691	CROJAS	21-JAN-14	SPM	Validation Complete. Promote Batch
2670949	LJWALKER	24-DEC-13	ITR	Review Complete

AMWTP
Advanced Mixed Waste Treatment Project

AMWTP

Non-Conformance Report

Date: 12-Sep-2014

Time: 13:48

*****Batch NCR(s)*****

Batch Type	VEB	Batch ID	VEB13-00526		
Trackwise Number		**Status**		**Opened Date**	**Closed Date**

*****Container NCR(s)*****

Container ID *or related Batch ID*	Trackwise Number	Status	Opened Date	Closed Date
10507242	82958	OPEN	22-DEC-13	

*****End of Non-Conformance Report*****

DIVIDER

PAGE

AMWTP
Advanced Mixed Waste Treatment Project

AMWTP

Batch Report Coversheet

Date: 12-Sep-2014

Time: 13:50

Batch Type VE Boxline
Batch Report No. VEB14-00003
Batch Id VEB14-00003
Open Date 10-JAN-14 15:55:04
Close Date 10-JAN-14 15:56:51
Batch Status AP
Test Facility Idaho AMWTP
Equipment Id VE DiD RPCK VE Drum Repackaging Into Drums

Container Id	IDC	Analysis Id	Date Examined	QC Type	Analysis Status	Operator
10507230	BN-508	0000313796	10-JAN-14 15:56:32	Original	P	DAVID KRINER
10507236	BN-508	0000313797	10-JAN-14 15:55:05	Original	P	DAVID KRINER
10507230	BN-508	0000313887	19-JAN-14 05:36:12	Supplemental	NR	DAVID KRINER

INFORMATION ONLY

**********Batch Comments**********

Written By	Date	Comment
DHASKETT	10-JAN-14 15:56:55	Esigned.
LJWALKER	12-JAN-14 11:40:50	Initial Review
LJWALKER	12-JAN-14 12:01:18	Container 10507230 identifies Sharps as present but the waste parameters give no indication of Sharp materials. Please correct accordingly.
LJWALKER	12-JAN-14 12:01:18	Demote to Ops
VWATERS	20-JAN-14 07:46:45	closed promote vbw 01/20/13
LJWALKER	20-JAN-14 07:59:40	Promote
LJWALKER	20-JAN-14 07:59:40	Rework complete and Sat.
RWALKER	23-JAN-14 08:17:07	SPM validation complete. Promote batch.

**********RTR/VE Update (RVU) Comments**********

Written By	Date	Comment

**********Batch E-Signature History**********

Approval ID	User ID	Signature Date	Comment
2673710	DHASKETT	10-JAN-2014 15:56:55	
2674089	LJWALKER	12-JAN-2014 12:01:18	Demote to Ops
2677226	VWATERS	20-JAN-2014 07:46:45	closed promote vbw 01/20/13
2677252	LJWALKER	20-JAN-2014 07:59:40	Promote
2678729	RWALKER	23-JAN-2014 08:17:07	SPM validation complete. Promote batch.

**********RTR/VE Update (RVU) E-Signature History**********

Approval ID	User ID	Signature Date	Comment

***** End of Batch Report Coversheet Report *****

AMWTP
Advanced Mixed Waste Treatment Project

AMWTP

VE Boxline and Repackaging Report

Date: 12-Sep-2014

Time: 13:50

Batch Id VEB14-00003 **Container Id** 10507230 **Analysis Id** 0000313796

VE Date 10-JAN-14 15:56:32 **Analysis Status** Pass

Gen-IDC Code BN-508 AMWTP Newly Generated Debris **VE Weight** 41.90 lbs

Closure Date 10-JAN-14 15:56:32 **Procedure Id** INST-FOI-17 **Net Weight** 15.90 lbs

Container Type 55 **Revision** 27

Operator 1 DAVID KRINER **Waste Matrix** S5490 **Summary Category Group** S5000

Operator 2 SARA FELLOWS **Equipment ID** VE DiD RPCK

General

Rigid Liner Present? No **Liner Type** NO LINER **Closure Method** No Bags

Liner Punctured? Yes **Layers Of Confinement** 0 **Fill Factor** 50 % **Liner Lid Present** No

Liquids

Liquids Present? No **Comment**

Liquid Between Liner and Drum 0 pints **Other Liquids** 0 pints

Containerized Liquid pints **Total Liquid Amount** 0 pints

Internal Container with Liquid 0 pints

Internal Container with Liquid No

Prohibited Liquids Present No

Containerized Liquid

Contents

Sharp Objects? No **Are Sharp Objects Protected?** Yes

	Value	*Comment*
Prohibited Compressed Gas Present?	No	
Explosives Present?	No	
Pyrophorics Present?	No	
Mercury Present?	No	
PCBs Present?	No	
PCB Mass (lbs)	0	
Wet Cell Batteries Present?	No	
Corrosives,Ignitables or Reactives Present?	No	
Beryllium Contaminates Present?	No	
Hazardous-Only Waste Present?	No	
Is Waste Incompatible with backfill, packaging materials, or shipping container materials?	No	
Sealed Containers Over 4L?	No	

IDC Verification

Is IDC correct? Yes **Recommended IDC** -

IDC Change Reason

Batch Id VEB14-00003 **Container Id** 10507230 **Analysis Id** 0000313796

Visual Exam Comment Remaning waste by weight percent is 100% plastic consiting bubble suite, tape and bags. This waste came from 335 entry. DH 01-10-14 Correction made to the sharps from YES to NO. DLK 1-19-14

---Source Container---

Is there a source container? No

Source Container ID	Location	IDC

---IDC CODES---

Current Container IDC Code: BN-508 **Recommended IDC Code:** -

--- Waste Material Items---

---Packaging Materials---

Material Item	Quantity	Unit	Unit Wt	Item Wt(lbs)

---Waste Items by Weight---

Material Item	Quantity	Unit	Unit Wt	Item Wt(lbs)

---Waste Items by Volume---

Material Item	Quantity	Unit	Unit Wt	Item Wt(lbs)

---Waste Parameters---

Waste Parameter	Remaining Weight %	Actual Weight Lbs
Iron-based Metals/Alloys	0.000	0.000
Aluminum-based Metals/Alloys	0.000	0.000
Other metals	0.000	0.000
Other Inorganic Materials	0.000	0.000
Cellulosics	0.000	0.000
Rubber	0.000	0.000
Plastic (Waste Materials)	100.000	15.895
Inorganic matrix	0.000	0.000
Organic matrix	0.000	0.000
Soils/gravel	0.000	0.000
Steel (packaging materials)	0.000	26.000
Plastic (packaging materials)	0.000	0.000
Cellulosics Packaging	0.000	0.000

---Esignature History---

Esig Approval Id	User Id	E-signature Date	Comment
2673708	DHASKETT	10-JAN-14 15:56:32	
2673709	DKRINER	10-JAN-14 15:56:37	
2677197	DKRINER	19-JAN-14 23:57:53	
2677198	SFELLOWS	19-JAN-14 23:57:56	

VE Boxline and Repackaging Report

Batch Id VEB14-00003 **Container Id** 10507236 **Analysis Id** 0000313797

VE Date 10-JAN-14 15:55:05 **Analysis Status** Pass

Gen-IDC Code BN-508 AMWTP Newly Generated Debris **VE Weight** 114.66 lbs

Closure Date 10-JAN-14 15:55:05 **Procedure Id** INST-FOI-17 **Net Weight** 88.66 lbs

Container Type 55 **Revision** 27

Operator 1 DAVID KRINER **Waste Matrix** S5490 **Summary Category Group** S5000

Operator 2 DENNIS HASKETT **Equipment ID** VE DiD RPCK

General

Rigid Liner Present? No **Liner Type** NO LINER **Closure Method** No Bags

Liner Punctured? Yes **Layers Of Confinement** 0 **Fill Factor** 80 % **Liner Lid Present** No

Liquids

Liquids Present? No **Comment**

Liquid Between Liner and Drum 0 pints **Other Liquids** 0 pints

Containerized Liquid pints **Total Liquid Amount** 0 pints

Internal Container with Liquid 0 pints

Internal Container with Liquid No

Prohibited Liquids Present No

Containerized Liquid

Contents

Sharp Objects? Yes **Are Sharp Objects Protected?** No

	Value	*Comment*
Prohibited Compressed Gas Present?	No	
Explosives Present?	No	
Pyrophorics Present?	No	
Mercury Present?	No	
PCBs Present?	No	
PCB Mass (lbs)	0	
Wet Cell Batteries Present?	No	
Corrosives,Ignitables or Reactives Present?	No	
Beryllium Contaminates Present?	No	
Hazardous-Only Waste Present?	No	
Is Waste Incompatible with backfill, packaging materials, or shipping container materials?	No	
Sealed Containers Over 4L?	No	

IDC Verification

Is IDC correct? Yes **Recommended IDC** -

IDC Change Reason

AMWTP
Advanced Mixed Waste Treatment Project

AMWTP

VE Boxline and Repackaging Report

Date: 12-Sep-2014

Time: 13:50

Batch Id VEB14-00003 **Container Id** 10507236 **Analysis Id** 0000313797

Visual Exam Comment Remaining waste by weight precent is 100% plastic. Consisting of bubble suit, tape, and bags. This waste came from 335 entry. DLK 1-10-14

---Source Container---

Is there a source container? No

Source Container ID	Location	IDC

---IDC CODES---

Current Container IDC Code: BN-508 **Recommended IDC Code:** -

---Waste Material Items---

---Packaging Materials---

Material Item	Quantity	Unit	Unit Wt	Item Wt(lbs)

---Waste Items by Weight---

Material Item	Quantity	Unit	Unit Wt	Item Wt(lbs)

---Waste Items by Volume---

Material Item	Quantity	Unit	Unit Wt	Item Wt(lbs)
Paper	1.000	PINTS	0.969	0.970
Rubber	8.000	PINTS	1.554	12.430
Iron	8.000	PINTS	7.807	62.460

---Waste Parameters---

Waste Parameter	Remaining Weight %	Actual Weight Lbs
Iron-based Metals/Alloys	0.000	62.460
Aluminum-based Metals/Alloys	0.000	0.000
Other metals	0.000	0.000
Other Inorganic Materials	0.000	0.000
Cellulosics	0.000	0.970
Rubber	0.000	12.430
Plastic (Waste Materials)	100.000	12.800
Inorganic matrix	0.000	0.000
Organic matrix	0.000	0.000
Soils/gravel	0.000	0.000
Steel (packaging materials)	0.000	26.000
Plastic (packaging materials)	0.000	0.000
Cellulosics Packaging	0.000	0.000

---Esignature History---

Esig Approval Id	User Id	E-signature Date	Comment
2673706	DKRINER	10-JAN-14 15:55:06	
2673707	DHASKETT	10-JAN-14 15:55:08	

------End of VE Boxline Report------

AMWTP
Advanced Mixed Waste Treatment Project

AMWTP

Checklist Report

Date: 12-Sep-2014

Time: 13:51

Batch Id VEB14-00003 **Open Date** 10-JAN-14 **Close Date** 10-JAN-14

Reviewer L.J. WALKER **Approval Level** Independent Technical Reviewer

Approval Date 12-JAN-14 **Review Iteration** 1

Question Text	Answer	Requirement	Comment
1. Is the QA documentation for the Batch Data Reports complete and includes data reports and QC results? o VE Batch Coversheet o Table of Contents (manual review only) o VE Analysis Reports o Analytical Balance Calibration Check Sheet (Form-1215), if applicable (manual review only) o ITR Checklist (Form-1415, manual review only) o Batch Data Report Supplemental Comment Form (Form-1491, manual review only) o Associated NCRs (referenced in WTS) o Audio/Video Recording References, if applicable	Yes		
2. Are there 20 containers or less in the batch?	Yes		
3. Was each VE Operator qualified at the time of the VE event?	Yes		
4. Was a VE data form completed for each container in the batch?	Yes		
Was the data generated in a technically correct manner using the correct revision of INST-OI-34, Non-facility Visual Examination or INST-FOI-17, Facility Visual Examination Operations, as applicable.	Yes		
6. Was the correct revision of the procedure documented on each analysis report?	Yes		
7. Was the E-signature History review performed?	Yes		
8. Was guidance from VEE documented, as applicable?	N/A		
9. Does every drum reported in the batch have a valid audio/video recording (as applicable)?	N/A		
10. Does the physical form match the waste stream description, waste matrix code and IDC?	Yes		
11. Did the VE event result in an IDC/Waste Matrix Code change? If so, was an NCR initiated?	No		
12. Were the waste material parameters documented correctly?	Yes		
13. Was the presence or absence of prohibited items properly identified? o If prohibited items were identified, were NCRs initiated?	Yes		
14. Has the description of rigid liners and layers of confinement been properly documented?	Yes		
15. Was the drum age criteria (DAC) entered correctly and completely? o Closure Method(s) o Liner Puncture Status o Layers of Confinement o Closure Date o Packaging Configuration o Type and number of filters, as applicable o Liner hole presence and diameter, as applicable	Yes		
16. Have filters been installed or removed from drum as recorded in WTS, as applicable?	N/A		

Batch Id VEB14-00003 **Open Date** 10-JAN-14 **Close Date** 10-JAN-14

Reviewer L.J. WALKER **Approval Level** Independent Technical Reviewer

Approval Date 12-JAN-14 **Review Iteration** 1

Question Text	Answer	Requirement	Comment
17. Hand calculations and unit conversions are correct? o Does the packaging weight plus the net weight equal the gross weight of the drum in the estimated waste material parameters, and for the unit conversions that are entered by volume or weight?	Yes		
18. Were all units and significant figures used correct for all reported volumes/weights?	Yes		
19. Has the data been reviewed for transcription errors as appropriate?	Yes		
20. Were the Visual Examination QAOs met? o Precision o Accuracy o Completeness o Comparability	Yes		
21. Is each data form signed by qualified VE Operators, as applicable per the appropriate procedure being used?	Yes		
22. Was the audio/video check satisfactory, as applicable?	N/A		
23. Was the scale or balance check weight event satisfactory, as applicable?	N/A		
24. Are the QC weight checks within the tolerance of the scale or balance, as applicable?	N/A		
25. Were any NCRs generated for drums containing prohibited items or any nonconforming conditions that failed to meet DQOs or QAOs? o Include the NCRs as appropriate, in the Batch Data Report.	No		
26. Were the rework requirements clearly identified in WTS or on the BDR?	Yes		See Batch Comments

Batch Id VEB14-00003 **Open Date** 10-JAN-14 **Close Date** 10-JAN-14

Reviewer L.J. WALKER **Approval Level** Independent Technical Reviewer

Approval Date 20-JAN-14 **Review Iteration** 2

Question Text	Answer	Requirement	Comment
1. Is the QA documentation for the Batch Data Reports complete and includes data reports and QC results? o VE Batch Coversheet o Table of Contents (manual review only) o VE Analysis Reports o Analytical Balance Calibration Check Sheet (Form-1215), if applicable (manual review only) o ITR Checklist (Form-1415, manual review only) o Batch Data Report Supplemental Comment Form (Form-1491, manual review only) o Associated NCRs (referenced in WTS) o Audio/Video Recording References, if applicable	Yes		
2. Are there 20 containers or less in the batch?	Yes		
3. Was each VE Operator qualified at the time of the VE event?	Yes		
4. Was a VE data form completed for each container in the batch?	Yes		
Was the data generated in a technically correct manner using the correct revision of INST-OI-34, Non-facility Visual Examination or INST-FOI-17, Facility Visual Examination Operations, as applicable.	Yes		
6. Was the correct revision of the procedure documented on each analysis report?	Yes		
7. Was the E-signature History review performed?	Yes		
8. Was guidance from VEE documented, as applicable?	N/A		
9. Does every drum reported in the batch have a valid audio/video recording (as applicable)?	N/A		
10. Does the physical form match the waste stream description, waste matrix code and IDC?	Yes		
11. Did the VE event result in an IDC/Waste Matrix Code change? If so, was an NCR initiated?	No		
12. Were the waste material parameters documented correctly?	Yes		
13. Was the presence or absence of prohibited items properly identified? o If prohibited items were identified, were NCRs initiated?	Yes		
14. Has the description of rigid liners and layers of confinement been properly documented?	Yes		
15. Was the drum age criteria (DAC) entered correctly and completely? o Closure Method(s) o Liner Puncture Status o Layers of Confinement o Closure Date o Packaging Configuration o Type and number of filters, as applicable o Liner hole presence and diameter, as applicable	Yes		
16. Have filters been installed or removed from drum as recorded in WTS, as applicable?	N/A		

Batch Id VEB14-00003 **Open Date** 10-JAN-14 **Close Date** 10-JAN-14

Reviewer L.J. WALKER **Approval Level** Independent Technical Reviewer

Approval Date 20-JAN-14 **Review Iteration** 2

Question Text	Answer	Requirement	Comment
17. Hand calculations and unit conversions are correct? o Does the packaging weight plus the net weight equal the gross weight of the drum in the estimated waste material parameters, and for the unit conversions that are entered by volume or weight?	Yes		
18. Were all units and significant figures used correct for all reported volumes/weights?	Yes		
19. Has the data been reviewed for transcription errors as appropriate?	Yes		
20. Were the Visual Examination QAOs met? o Precision o Accuracy o Completeness o Comparability	Yes		
21. Is each data form signed by qualified VE Operators, as applicable per the appropriate procedure being used?	Yes		
22. Was the audio/video check satisfactory, as applicable?	N/A		
23. Was the scale or balance check weight event satisfactory, as applicable?	N/A		
24. Are the QC weight checks within the tolerance of the scale or balance, as applicable?	N/A		
25. Were any NCRs generated for drums containing prohibited items or any nonconforming conditions that failed to meet DQOs or QAOs? o Include the NCRs as appropriate, in the Batch Data Report.	No		
26. Were the rework requirements clearly identified in WTS or on the BDR?	Yes		See Batch Comments

Batch Id VEB14-00003 **Open Date** 10-JAN-14 **Close Date** 10-JAN-14

Reviewer REED WALKER **Approval Level** SPM Data Validation

Approval Date 23-JAN-14 **Review Iteration** 1

Question Text	Answer	Requirement	Comment
(1) Has the batch received a Data Generation Level Independent Technical Review?	Yes	MP-TRUW-8.2, C3-10b(1)	
(2) Are the batch data review checklists complete?	Yes	MP-TRUW-8.2, C3-10b(1)	
(3) When identified, were PCBs, mercury, lead, or other hazardous contaminants consistent with the waste stream AK Summary Report(s) and/or AK documentation?	N/A	MP-TRUW-8.2, C4-3	None were identified.
(4) Are any ignitable, corrosive, or reactive wastes identified?	No	MP-TRUW-8.2, C4-3	
(5) Are the packaging configurations identified on the VE consistent with the waste stream AK Summary Report(s) and/or AK documentation?	Yes	MP-TRUW-8.2, C4-3	
(6) Do the drums in this batch contain typical waste items consistent with waste stream AK Summary Report(s) and/or AK documentation?	Yes	MP-TRUW-8.2, C4-3	
(7) Are the Waste Matrix Codes and physical form descriptions consistent with AK?	Yes	MP-TRUW-8.2, C4-3	
(8) Have all AK discrepancies been resolved and have all AK Resolution checklists been approved? Reference all waste stream AK documentation used in review of this data package.	N/A	MP-TRUW-8.2, C4-3	No discrepancies identified.
(9) Does the batch report identify the correct implementing procedure number and revision number used for this testing method?	Yes	MP-TRUW-8.2, C3-4 and Table C3-11	
(10) Have the Waste Matrix Code (WMC) and IDC for all drums in the batch remained the same as originally assigned by the historical designation? NOTE: If not, note the drum number in the comment field and notify the Acceptable Knowledge Expert (AKE) if an NCR does not exist for the WMC and IDC change.	Yes	MP-TRUW-8.2, C-3c and C1-4	
(11) Does the physical form of the waste match the WMC, waste stream description, and identify the absence of prohibited items?	Yes	MP-TRUW-8.2, C-3c and C1-4	
(12) If observable liquids exist in the drum, is an estimate of quantity given?	N/A	MP-TRUW-8.2, C-3c and C1-4	No liquids identified.
(13) Precision: Have all discrepancies been reconciled between the operator and the ITR with regard to identification of WMC, liquids in excess of TSDF-WAC limits, and compressed gases?	Yes	MP-TRUW-8.2 C3-4b	
(14) Accuracy: Have all operators passed a comprehensive examination and demonstrated satisfactory performance in the presence of the VE expert during initial and subsequent qualifications?	Yes	MP-TRUW-8.2 C3-4b	
(15) Completeness: Has a validated VE data form been obtained for 100% of the waste containers subject to VE?	Yes	MP-TRUW-8.2 C3-4b	
(16) Comparability: Has the comparability of VE data from different operators been enhanced by use of standardized VE procedures and operator qualifications?	Yes	MP-TRUW-8.2 C3-4b	
(17) Does the data for all containers within this batch meet the review, validation, and verification requirements?	Yes	MP-TRUW-8.2, C3-10b and Table C3-11	

Batch Id VEB14-00003 **Open Date** 10-JAN-14 **Close Date** 10-JAN-14

Reviewer REED WALKER **Approval Level** SPM Data Validation

Approval Date 23-JAN-14 **Review Iteration** 1

Question Text	Answer	Requirement	Comment
· Are proper units (e.g. Liters or pounds) and significant figure used? · Is the BDR complete (all pages identified in the BDR and numbered according)? - VE Batch Coversheet - Table of Contents (manual review only) - VE Analysis Reports - Analytical Balance Calibration Checklist (if applicable) - ITR Checklist (Form-1415) - Associated NCRs - Audio/Video Recordings (if applicable)			
(18) Do the drum reports contain the (a) Batch Data Report number and date, (b) waste container number (c)WMC, (d) implementing procedure and revision, (e) audio/video recording reference, (f) audio and video QC checks were performed and satisfactory, (g) verification that the physical form matches the waste stream description and WMC, (h) absence of prohibited items, (i) gross container weight, (j) waste material parameter weights, and (k) signature and date of examination (signatures of both operators when applicable)?	Yes	MP-TRUW-8.2, C1-4 and Table C3-11	
(19) Is the description of container contents detailed enough to provide verification of estimated weights for the waste matrix parameters identified?	Yes	MP-TRUW-8.2, C1-4 and Table C3-11	
(20) Is there a valid second weight check for every 10 items?	N/A	MP-TRUW-8.2, C1-4	Not required for this batch.
(21) Verification of two operator signatures when doing VE?	Yes	MP-TRUW-8.2, C-3d(1) and Table C3-11	
(22) Are there 20 or fewer containers in the batch?	Yes	MP-TRUW-8.2, C1-3 and C3-10	
(23) Review all NCRs (open and closed). Can the batch be approved?	Yes	MP-TRUW-8.2, C3-13	No NCRs.
(24) All data associated with this BDR is acceptable for signature release?	Yes	MP-TRUW-8.2, C3-10b and C3-10b(1)	

Batch Id VEB14-00003

Open Date 10-JAN-14

Close Date 10-JAN-14

Esignature History

Esig Approval ID	User ID	Esig Date	Approval Level	Comments
2678729	RWALKER	23-JAN-14	SPM	SPM validation complete. Promote batch.
2677252	LJWALKER	20-JAN-14	ITR	Promote
2674089	LJWALKER	12-JAN-14	ITR	Demote to Ops

AMWTP
Advanced Mixed Waste Treatment Project

AMWTP

Non-Conformance Report

Date: 12-Sep-2014

Time: 13:52

*****Batch NCR(s)*****

Batch Type	VEB	Batch ID	VEB14-00003		
Trackwise Number		Status		Opened Date	Closed Date

*****Container NCR(s)*****

Container ID *or related Batch ID*	Trackwise Number	Status	Opened Date	Closed Date

*****End of Non-Conformance Report*****

AMWTP

Advanced Mixed Waste Treatment Project

AMWTP

RTR/VE Update Analysis Report

Date: 12-Sep-2014

Time: 13:52

Affected Batch VEB14-00003 **Container Id** 10507230 **Analysis Id** 0000313887 **Analysis Status** Non Reportable

VE Date 19-JAN-14 05:36:12
Procedure Id INST-FOI-17
Gross Weight 41.90 lbs.
Gen-IDC Id BN-508 AMWTP Newly Generated Debris
Proc Rev 27
Net Weight 15.90 lbs.
Waste Matrix S5490
Summary Category Group S5000
Equipment ID VE NGW C FAC
Container Type 55
Affected Analysis ID 0000313796
Operator 1 DAVID KRINER
Operator 2 JUSTIN BURTON

General

Rigid Liner Present? No **Liner Punctured?** Yes **Liner Hole Size:** 20" in. **Liner Type** NO LINER
Liner Lid Present No **Fill Factor** 50 %

Liquids

Liquids Present? No **Comment**
Liquid Between Liner and Drum 0 pints
Internal Container with Liquid 0 pints
Containerized Liquid pints
Other Liquids 0 pints
Total Liquid Amount 0 pints

Prohibited Liquids Present No

Internal Container with Liquid No

Containerized Liquid

Affected Batch VEB14-00003 **Container Id** 10507230 **Analysis Id** 0000313887

Contents

Sharp Objects? No **Are Sharp Objects Protected?** Yes

	Value	Comment
Prohibited Compressed Gas Present?	No	
Aerosol Cans Present?	No	
Explosives Present?	No	
Pyrophorics Present?	No	
Mercury Present?	No	
PCBs Present?	No	
PCB Mass (lbs)	0	
Wet Cell Batteries Present?	No	
Corrosives, Ignitables or Reactives Present?	No	
Beryllium Contaminates Present?	No	
Hazardous-Only Waste Present?	No	
Is Waste Incompatible with backfill, packaging	No	
Sealed Containers Over 4 liters?	No	

IDC Verification

Is IDC correct? Yes **Recommended IDC**

IDC Change Reason

Visual Exam Comment {Remaning waste by weight percent is 100% plastic consiting bubble suite, tape and bags. This waste came from 335 entry. DH 01-10-14 - VE comment from VE batch VEB14-00003} This rework was to say no sharps in this drum. DLK 1-19-14

Closure

Closure Date 10-JAN-14 15:56:32 **Closure Method** No Bags

Layers Of Confinement 0 **Overpack Required?** No

New Steel Lid? No

IDC CODES

Current Container IDC Code: BN-508 **Recommended IDC Code:**

Waste Material Items

AMWTP
Advanced Mixed Waste Treatment Project

AMWTP

RTR/VE Update Analysis Report

Date: 12-Sep-2014

Time: 13:52

Affected Batch VEB14-00003 **Container Id** 10507230 **Analysis Id** 0000313887

---Packaging Materials---

Material Item	Quantity	Unit	Unit Wt	Item Wt(lbs)

---Waste Items by Weight---

Material Item	Quantity	Unit	Unit Wt	Item Wt(lbs)

---Waste Items by Volume---

Material Item	Quantity	Unit	Unit Wt	Item Wt(lbs)

---Waste Parameters---

Waste Parameter	Remaining Weight %	Actual Weight Lbs
Iron-based Metals/Alloys	0.000	0.000
Aluminum-based Metals/Alloys	0.000	0.000
Other metals	0.000	0.000
Other Inorganic Materials	0.000	0.000
Cellulosics	0.000	0.000
Rubber	0.000	0.000
Plastic (Waste Materials)	100.000	15.895
Inorganic matrix	0.000	0.000
Organic matrix	0.000	0.000
Soils/gravel	0.000	0.000
Steel (packaging materials)	0.000	26.000
Plastic (packaging materials)	0.000	0.000
Cellulosics Packaging	0.000	0.000

---Container Filters---

WDS Filter Code	Event	Event Date	Entered By	Remove	Other Filter Model	Exclude

---E-Signature History---

Esig Approval Id	User ID	E-signature Date	Comment
2676987	DKRINER	19-JAN-14 05:36:15	
2676988	JBURTON	19-JAN-14 05:36:17	

---End of RTR/VE Update Analysis Report---

DIVIDER

PAGE

AMWTP
Advanced Mixed Waste Treatment Project

AMWTP

Batch Report Coversheet

Date: 12-Sep-2014

Time: 13:57

Batch Type VE Boxline
Batch Report No. VEB14-00162
Batch Id VEB14-00162
Open Date 17-MAY-14 16:20:17
Close Date 18-MAY-14 14:49:28
Batch Status AP
Test Facility Idaho AMWTP
Equipment Id VE BiD RPCK VE Box Repackaging Into Drums

Container Id	IDC	Analysis Id	Date Examined	QC Type	Analysis Status	Operator
10521096	BN-508	0000318503	17-MAY-14 16:20:17	Original	P	BRIAN HAWKE
10520991	BN-508	0000318506	17-MAY-14 16:35:16	Original	P	BRIAN HAWKE
10521081	BN-508	0000318509	17-MAY-14 17:01:58	Original	P	BRIAN HAWKE
10521048	BN-508	0000318510	17-MAY-14 17:29:39	Original	P	BRIAN HAWKE
10521086	BN-508	0000318511	17-MAY-14 17:42:34	Original	P	BRIAN HAWKE
10520769	BN-508	0000318512	17-MAY-14 17:54:54	Original	P	BRIAN HAWKE
10521084	BN-508	0000318513	18-MAY-14 07:53:45	Original	P	AARON FENN
10521002	BN-508	0000318514	18-MAY-14 08:29:28	Original	P	AARON FENN
10521009	BN-508	0000318515	18-MAY-14 08:57:08	Original	P	AARON FENN
10521006	BN-508	0000318516	18-MAY-14 09:31:27	Original	P	AARON FENN
10520997	BN-508	0000318517	18-MAY-14 09:47:34	Original	P	AARON FENN
10521038	BN-508	0000318518	18-MAY-14 10:05:06	Original	P	AARON FENN
10521007	BN-508	0000318519	18-MAY-14 10:42:44	Original	P	AARON FENN
10521040	BN-508	0000318520	18-MAY-14 11:01:45	Original	P	AARON FENN
10520996	BN-508	0000318523	18-MAY-14 12:14:27	Original	P	SHANE HIGH
10521107	BN-508	0000318528	18-MAY-14 13:53:04	Original	P	SHANE HIGH
10521093	BN-508	0000318529	18-MAY-14 14:10:38	Original	P	SHANE HIGH
10520994	BN-508	0000318530	18-MAY-14 14:25:27	Original	P	SHANE HIGH
10521100	BN-508	0000318531	18-MAY-14 14:36:09	Original	P	SHANE HIGH
10521046	BN-508	0000318533	18-MAY-14 14:48:28	Original	P	SHANE HIGH

INFORMATION ONLY

**********Batch Comments**********

Written By	Date	Comment
RGRISE	25-JUN-14 15:50:51	Initial validation performed electronically per MP-TRUW-8.8
RGRISE	25-JUN-14 15:50:51	Promote batch to SPM level.
RWALKER	26-JUN-14 10:03:18	Demoted batch back to the ITR level for the correct revision of the ITR checklist.
LJWALKER	26-JUN-14 12:05:25	Promote to update Checklist to Rev 37
RWALKER	26-JUN-14 12:27:34	SPM validation complete. Promote batch.

**********Batch E-Signature History**********

Approval ID	User ID	Signature Date	Comment
2781685	RGRISE	25-JUN-2014 15:50:51	Promote batch to SPM level.
2782080	RWALKER	26-JUN-2014 10:03:19	Demoted batch back to the ITR level for the correct revision of the ITR checklist.
2782195	LJWALKER	26-JUN-2014 12:05:25	Promote to update Checklist to Rev 37
2782197	RWALKER	26-JUN-2014 12:27:34	SPM validation complete. Promote batch.

***** End of Batch Report Coversheet Report *****

AMWTP
Advanced Mixed Waste Treatment Project

AMWTP

VE Boxline and Repackaging Report

Date: 12-Sep-2014
Time: 13:58

Batch Id VEB14-00162 **Container Id** 10521096 **Analysis Id** 0000318503

VE Date 17-MAY-14 16:20:17 **Analysis Status** Pass
Gen-IDC Code BN-508 AMWTP Newly Generated Debris **VE Weight** 110.25 lbs
Closure Date 17-MAY-14 16:20:17 **Procedure Id** INST-FOI-17 **Net Weight** 84.25 lbs
Container Type 55 **Revision** 27
Operator 1 BRIAN HAWKE **Waste Matrix** S5490 **Summary Category Group** S5000
Operator 2 JOHN CUNNINGHAM **Equipment ID** VE BiD RPCK

General

Rigid Liner Present? No **Liner Type** NO LINER **Closure Method** No Bags
Liner Punctured? Yes **Layers Of Confinement** 0 **Fill Factor** 76 % **Liner Lid Present** No

Liquids

Liquids Present? No **Comment**

Liquid Between Liner and Drum 0 pints **Other Liquids** 0 pints
Containerized Liquid pints **Total Liquid Amount** 0 pints
Internal Container with Liquid 0 pints

Internal Container with Liquid No

Prohibited Liquids Present No

Containerized Liquid

Contents

Sharp Objects? Yes **Are Sharp Objects Protected?** No

	Value	*Comment*
Prohibited Compressed Gas Present?	No	
Explosives Present?	No	
Pyrophorics Present?	No	
Mercury Present?	No	
PCBs Present?	No	
PCB Mass (lbs)	0	
Wet Cell Batteries Present?	No	
Corrosives,Ignitables or Reactives Present?	No	
Beryllium Contaminates Present?	No	
Hazardous-Only Waste Present?	No	
Is Waste Incompatible with backfill, packaging materials, or shipping container materials?	No	
Sealed Containers Over 4L?	No	

IDC Verification

Is IDC correct? Yes **Recommended IDC** -

IDC Change Reason

Batch Id VEB14-00162 **Container Id** 10521096 **Analysis Id** 0000318503

Visual Exam Comment The remaining waste by weight percent is iron based alloys consisting of scrap metal.

---Source Container---

Is there a source container? Yes

Source Container ID	Location	IDC
10315893	destroyed @ 676- BXI/16	SD-177

---IDC CODES---

Current Container IDC Code: BN-508 **Recommended IDC Code:** -

--- Waste Material Items---

---Packaging Materials---

Material Item	Quantity	Unit	Unit Wt	Item Wt(lbs)

---Waste Items by Weight---

Material Item	Quantity	Unit	Unit Wt	Item Wt(lbs)

---Waste Items by Volume---

Material Item	Quantity	Unit	Unit Wt	Item Wt(lbs)
Oil-Dri (Inside 55 gal drum)	4.000	PINTS	0.420	1.680
Paper	1.000	PINTS	0.969	0.970
Rubber	1.000	PINTS	1.554	1.550
Wood	2.000	PINTS	0.702	1.400
Plastic	1.000	PINTS	0.937	0.940

---Waste Parameters---

Waste Parameter	Remaining Weight %	Actual Weight Lbs
Iron-based Metals/Alloys	100.000	77.710
Aluminum-based Metals/Alloys	0.000	0.000
Other metals	0.000	0.000
Other Inorganic Materials	0.000	1.680
Cellulosics	0.000	2.370
Rubber	0.000	1.550
Plastic (Waste Materials)	0.000	0.940
Inorganic matrix	0.000	0.000
Organic matrix	0.000	0.000
Soils/gravel	0.000	0.000
Steel (packaging materials)	0.000	26.000
Plastic (packaging materials)	0.000	0.000
Cellulosics Packaging	0.000	0.000
MLLW Waste	0.000	0.000

---Esignature History---

Esig Approval Id	User Id	E-signature Date	Comment
2757837	BHAWKE	17-MAY-14 16:20:17	
2757838	JCUNNINGHAM	17-MAY-14 16:20:18	

Batch Id VEB14-00162 **Container Id** 10520991 **Analysis Id** 0000318506

VE Date 17-MAY-14 16:35:16 **Analysis Status** Pass

Gen-IDC Code BN-508 AMWTP Newly Generated Debris **VE Weight** 147.74 lbs

Closure Date 17-MAY-14 16:35:16 **Procedure Id** INST-FOI-17 **Net Weight** 121.74 lbs

Container Type 55 **Revision** 27

Operator 1 BRIAN HAWKE **Waste Matrix** S5490 **Summary Category Group** S5000

Operator 2 JOHN CUNNINGHAM **Equipment ID** VE BiD RPCK

---General---

Rigid Liner Present? No **Liner Type** NO LINER **Closure Method** No Bags

Liner Punctured? Yes **Layers Of Confinement** 0 **Fill Factor** 75 % **Liner Lid Present** No

---Liquids---

Liquids Present? No **Comment**

Liquid Between Liner and Drum 0 pints **Other Liquids** 0 pints

Containerized Liquid pints **Total Liquid Amount** 0 pints

Internal Container with Liquid 0 pints

Internal Container with Liquid No

Prohibited Liquids Present No

Containerized Liquid

---Contents---

Sharp Objects? Yes **Are Sharp Objects Protected?** No

	Value	*Comment*
Prohibited Compressed Gas Present?	No	
Explosives Present?	No	
Pyrophorics Present?	No	
Mercury Present?	No	
PCBs Present?	No	
PCB Mass (lbs)	0	
Wet Cell Batteries Present?	No	
Corrosives,Ignitables or Reactives Present?	No	
Beryllium Contaminates Present?	No	
Hazardous-Only Waste Present?	No	
Is Waste Incompatible with backfill, packaging materials, or shipping container materials?	No	
Sealed Containers Over 4L?	No	

---IDC Verification---

Is IDC correct? Yes **Recommended IDC** -

IDC Change Reason

Batch Id VEB14-00162 **Container Id** 10520991 **Analysis Id** 0000318506

Visual Exam Comment The remaining waste by weight percent is iron based alloys consisting of scrap metal.

---*Source Container*---

Is there a source container? Yes

Source Container ID	Location	IDC
10315893	destroyed @ 676- BXI/16	SD-177

---*IDC CODES*---

Current Container IDC Code: BN-508 **Recommended IDC Code:** -

---*Waste Material Items*---

---*Packaging Materials*---

Material Item	Quantity	Unit	Unit Wt	Item Wt(lbs)

---*Waste Items by Weight*---

Material Item	Quantity	Unit	Unit Wt	Item Wt(lbs)

---*Waste Items by Volume*---

Material Item	Quantity	Unit	Unit Wt	Item Wt(lbs)
Oil-Dri (Inside 55 gal drum)	2.000	PINTS	0.420	0.840
Paper	2.000	PINTS	0.969	1.940
Plastic	3.000	PINTS	0.937	2.810

---*Waste Parameters*---

Waste Parameter	Remaining Weight %	Actual Weight Lbs
Iron-based Metals/Alloys	100.000	116.145
Aluminum-based Metals/Alloys	0.000	0.000
Other metals	0.000	0.000
Other Inorganic Materials	0.000	0.840
Cellulosics	0.000	1.940
Rubber	0.000	0.000
Plastic (Waste Materials)	0.000	2.810
Inorganic matrix	0.000	0.000
Organic matrix	0.000	0.000
Soils/gravel	0.000	0.000
Steel (packaging materials)	0.000	26.000
Plastic (packaging materials)	0.000	0.000
Cellulosics Packaging	0.000	0.000
MLLW Waste	0.000	0.000

---*Esignature History*---

Esig Approval Id	User Id	E-signature Date	Comment
2757852	BHAWKE	17-MAY-14 16:35:16	
2757853	JCUNNINGHAM	17-MAY-14 16:35:20	

Batch Id VEB14-00162 **Container Id** 10521081 **Analysis Id** 0000318509

VE Date 17-MAY-14 17:01:58 **Analysis Status** Pass

Gen-IDC Code BN-508 AMWTP Newly Generated Debris **VE Weight** 132.30 lbs

Closure Date 17-MAY-14 17:01:58 **Procedure Id** INST-FOI-17 **Net Weight** 106.30 lbs

Container Type 55 **Revision** 27

Operator 1 BRIAN HAWKE **Waste Matrix** S5490 **Summary Category Group** S5000

Operator 2 JOHN CUNNINGHAM **Equipment ID** VE BiD RPCK

---General---

Rigid Liner Present? No **Liner Type** NO LINER **Closure Method** No Bags

Liner Punctured? Yes **Layers Of Confinement** 0 **Fill Factor** 72 % **Liner Lid Present** No

---Liquids---

Liquids Present? No **Comment**

Liquid Between Liner and Drum 0 pints **Other Liquids** 0 pints

Containerized Liquid pints **Total Liquid Amount** 0 pints

Internal Container with Liquid 0 pints

Internal Container with Liquid No

Prohibited Liquids Present No

Containerized Liquid

---Contents---

Sharp Objects? Yes **Are Sharp Objects Protected?** No

	Value	*Comment*
Prohibited Compressed Gas Present?	No	
Explosives Present?	No	
Pyrophorics Present?	No	
Mercury Present?	No	
PCBs Present?	No	
PCB Mass (lbs)	0	
Wet Cell Batteries Present?	No	
Corrosives,Ignitables or Reactives Present?	No	
Beryllium Contaminates Present?	No	
Hazardous-Only Waste Present?	No	
Is Waste Incompatible with backfill, packaging materials, or shipping container materials?	No	
Sealed Containers Over 4L?	No	

---IDC Verification---

Is IDC correct? Yes **Recommended IDC** -

IDC Change Reason

Batch Id VEB14-00162 **Container Id** 10521081 **Analysis Id** 0000318509

Visual Exam Comment The remaining waste by weight percent is iron based alloys consisting of scrap metal.

Source Container

Is there a source container? Yes

Source Container ID	Location	IDC
10315893	destroyed @ 676- BXI/16	SD-177

IDC CODES

Current Container IDC Code: BN-508 **Recommended IDC Code:** -

Waste Material Items

Packaging Materials

Material Item	Quantity	Unit	Unit Wt	Item Wt(lbs)

Waste Items by Weight

Material Item	Quantity	Unit	Unit Wt	Item Wt(lbs)

Waste Items by Volume

Material Item	Quantity	Unit	Unit Wt	Item Wt(lbs)
Oil-Dri (Inside 55 gal drum)	3.000	PINTS	0.420	1.260
Paper	1.000	PINTS	0.969	0.970
Plastic	1.000	PINTS	0.937	0.940

Waste Parameters

Waste Parameter	Remaining Weight %	Actual Weight Lbs
Iron-based Metals/Alloys	100.000	103.130
Aluminum-based Metals/Alloys	0.000	0.000
Other metals	0.000	0.000
Other Inorganic Materials	0.000	1.260
Cellulosics	0.000	0.970
Rubber	0.000	0.000
Plastic (Waste Materials)	0.000	0.940
Inorganic matrix	0.000	0.000
Organic matrix	0.000	0.000
Soils/gravel	0.000	0.000
Steel (packaging materials)	0.000	26.000
Plastic (packaging materials)	0.000	0.000
Cellulosics Packaging	0.000	0.000
MLLW Waste	0.000	0.000

Esignature History

Esig Approval Id	User Id	E-signature Date	Comment
2757870	BHAWKE	17-MAY-14 17:01:58	
2757871	JCUNNINGHAM	17-MAY-14 17:02:00	

Batch Id VEB14-00162 **Container Id** 10521048 **Analysis Id** 0000318510

VE Date 17-MAY-14 17:29:39 **Analysis Status** Pass

Gen-IDC Code BN-508 AMWTP Newly Generated Debris **VE Weight** 171.99 lbs

Closure Date 17-MAY-14 17:29:39 **Procedure Id** INST-FOI-17 **Net Weight** 145.99 lbs

Container Type 55 **Revision** 27

Operator 1 BRIAN HAWKE **Waste Matrix** S5490 **Summary Category Group** S5000

Operator 2 JOHN CUNNINGHAM **Equipment ID** VE BiD RPCK

---General---

Rigid Liner Present? No **Liner Type** NO LINER **Closure Method** No Bags

Liner Punctured? Yes **Layers Of Confinement** 0 **Fill Factor** 72 % **Liner Lid Present** No

---Liquids---

Liquids Present? No **Comment**

Liquid Between Liner and Drum 0 pints **Other Liquids** 0 pints

Containerized Liquid pints **Total Liquid Amount** 0 pints

Internal Container with Liquid 0 pints

Internal Container with Liquid No

Prohibited Liquids Present No

Containerized Liquid

---Contents---

Sharp Objects? Yes **Are Sharp Objects Protected?** No

	Value	*Comment*
Prohibited Compressed Gas Present?	No	
Explosives Present?	No	
Pyrophorics Present?	No	
Mercury Present?	No	
PCBs Present?	No	
PCB Mass (lbs)	0	
Wet Cell Batteries Present?	No	
Corrosives,Ignitables or Reactives Present?	No	
Beryllium Contaminates Present?	No	
Hazardous-Only Waste Present?	No	
Is Waste Incompatible with backfill, packaging materials, or shipping container materials?	No	
Sealed Containers Over 4L?	No	

---IDC Verification---

Is IDC correct? Yes **Recommended IDC** -

IDC Change Reason

Batch Id VEB14-00162 **Container Id** 10521048 **Analysis Id** 0000318510

Visual Exam Comment The remaining waste by weight percent is iron based alloys consisting of scrap metal.

---Source Container---

Is there a source container? Yes

Source Container ID	Location	IDC
10315893	destroyed @ 676- BXI/16	SD-177

---IDC CODES---

Current Container IDC Code: BN-508 **Recommended IDC Code:** -

--- Waste Material Items---

---Packaging Materials---

Material Item	Quantity	Unit	Unit Wt	Item Wt(lbs)

---Waste Items by Weight---

Material Item	Quantity	Unit	Unit Wt	Item Wt(lbs)

---Waste Items by Volume---

Material Item	Quantity	Unit	Unit Wt	Item Wt(lbs)
Oil-Dri (Inside 55 gal drum)	4.000	PINTS	0.420	1.680
Paper	1.000	PINTS	0.969	0.970
Plastic	1.000	PINTS	0.937	0.940

---Waste Parameters---

Waste Parameter	Remaining Weight %	Actual Weight Lbs
Iron-based Metals/Alloys	100.000	142.400
Aluminum-based Metals/Alloys	0.000	0.000
Other metals	0.000	0.000
Other Inorganic Materials	0.000	1.680
Cellulosics	0.000	0.970
Rubber	0.000	0.000
Plastic (Waste Materials)	0.000	0.940
Inorganic matrix	0.000	0.000
Organic matrix	0.000	0.000
Soils/gravel	0.000	0.000
Steel (packaging materials)	0.000	26.000
Plastic (packaging materials)	0.000	0.000
Cellulosics Packaging	0.000	0.000
MLLW Waste	0.000	0.000

---Esignature History---

Esig Approval Id	User Id	E-signature Date	Comment
2757874	BHAWKE	17-MAY-14 17:29:40	
2757875	JCUNNINGHAM	17-MAY-14 17:29:45	

Batch Id VEB14-00162 Container Id 10521086 Analysis Id 0000318511

VE Date 17-MAY-14 17:42:34 Analysis Status Pass

Gen-IDC Code BN-508 AMWTP Newly Generated Debris VE Weight 88.20 lbs

Closure Date 17-MAY-14 17:42:34 Procedure Id INST-FOI-17 Net Weight 62.20 lbs

Container Type 55 Revision 27

Operator 1 BRIAN HAWKE Waste Matrix S5490 Summary Category Group S5000

Operator 2 JOHN CUNNINGHAM Equipment ID VE BiD RPCK

---General---

Rigid Liner Present? No Liner Type NO LINER Closure Method No Bags

Liner Punctured? Yes Layers Of Confinement 0 Fill Factor 75 % Liner Lid Present No

---Liquids---

Liquids Present? No Comment

Liquid Between Liner and Drum 0 pints Other Liquids 0 pints

Containerized Liquid pints Total Liquid Amount 0 pints

Internal Container with Liquid 0 pints

Internal Container with Liquid No

Prohibited Liquids Present No

Containerized Liquid

---Contents---

Sharp Objects? Yes Are Sharp Objects Protected? No

	Value	Comment
Prohibited Compressed Gas Present?	No	
Explosives Present?	No	
Pyrophorics Present?	No	
Mercury Present?	No	
PCBs Present?	No	
PCB Mass (lbs)	0	
Wet Cell Batteries Present?	No	
Corrosives,Ignitables or Reactives Present?	No	
Beryllium Contaminates Present?	No	
Hazardous-Only Waste Present?	No	
Is Waste Incompatible with backfill, packaging materials, or shipping container materials?	No	
Sealed Containers Over 4L?	No	

---IDC Verification---

Is IDC correct? Yes Recommended IDC -

IDC Change Reason

AMWTP
Advanced Mixed Waste Treatment Project

AMWTP

VE Boxline and Repackaging Report

Date: 12-Sep-2014

Time: 13:58

Batch Id VEB14-00162 **Container Id** 10520769 **Analysis Id** 0000318512

VE Date 17-MAY-14 17:54:54 **Analysis Status** Pass

Gen-IDC Code BN-508 AMWTP Newly Generated Debris **VE Weight** 158.76 lbs

Closure Date 17-MAY-14 17:54:54 **Procedure Id** INST-FOI-17 **Net Weight** 132.76 lbs

Container Type 55 **Revision** 27

Operator 1 BRIAN HAWKE **Waste Matrix** S5490 **Summary Category Group** S5000

Operator 2 JOHN CUNNINGHAM **Equipment ID** VE BiD RPCK

General

Rigid Liner Present? No **Liner Type** NO LINER **Closure Method** No Bags

Liner Punctured? Yes **Layers Of Confinement** 0 **Fill Factor** 75 % **Liner Lid Present** No

Liquids

Liquids Present? No **Comment**

Liquid Between Liner and Drum 0 pints **Other Liquids** 0 pints

Containerized Liquid pints **Total Liquid Amount** 0 pints

Internal Container with Liquid 0 pints

Internal Container with Liquid No

Prohibited Liquids Present No

Containerized Liquid

Contents

Sharp Objects? Yes **Are Sharp Objects Protected?** No

	Value	*Comment*
Prohibited Compressed Gas Present?	No	
Explosives Present?	No	
Pyrophorics Present?	No	
Mercury Present?	No	
PCBs Present?	No	
PCB Mass (lbs)	0	
Wet Cell Batteries Present?	No	
Corrosives,Ignitables or Reactives Present?	No	
Beryllium Contaminates Present?	No	
Hazardous-Only Waste Present?	No	
Is Waste Incompatible with backfill, packaging materials, or shipping container materials?	No	
Sealed Containers Over 4L?	No	

IDC Verification

Is IDC correct? Yes **Recommended IDC** -

IDC Change Reason

Batch Id VEB14-00162 Container Id 10520769 Analysis Id 0000318512

Visual Exam Comment The remaining waste by weight percent is iron based alloys consisting of scrap metal.

---Source Container---

Is there a source container? Yes

Source Container ID	Location	IDC
10315893	destroyed @ 676- BXI/16	SD-177

---IDC CODES---

Current Container IDC Code: BN-508 **Recommended IDC Code:** -

--- Waste Material Items---

---Packaging Materials---

Material Item	Quantity	Unit	Unit Wt	Item Wt(lbs)

---Waste Items by Weight---

Material Item	Quantity	Unit	Unit Wt	Item Wt(lbs)

---Waste Items by Volume---

Material Item	Quantity	Unit	Unit Wt	Item Wt(lbs)
Oil-Dri (Inside 55 gal drum)	7.000	PINTS	0.420	2.940
Paper	1.000	PINTS	0.969	0.970
Plastic	1.000	PINTS	0.937	0.940

---Waste Parameters---

Waste Parameter	Remaining Weight %	Actual Weight Lbs
Iron-based Metals/Alloys	100.000	127.910
Aluminum-based Metals/Alloys	0.000	0.000
Other metals	0.000	0.000
Other Inorganic Materials	0.000	2.940
Cellulosics	0.000	0.970
Rubber	0.000	0.000
Plastic (Waste Materials)	0.000	0.940
Inorganic matrix	0.000	0.000
Organic matrix	0.000	0.000
Soils/gravel	0.000	0.000
Steel (packaging materials)	0.000	26.000
Plastic (packaging materials)	0.000	0.000
Cellulosics Packaging	0.000	0.000
MLLW Waste	0.000	0.000

---Esignature History---

Esig Approval Id	User Id	E-signature Date	Comment
2757889	BHAWKE	17-MAY-14 17:54:54	
2757890	JCUNNINGHAM	17-MAY-14 17:54:55	

Batch Id VEB14-00162 **Container Id** 10521084 **Analysis Id** 0000318513

VE Date 18-MAY-14 07:53:45 **Analysis Status** Pass

Gen-IDC Code BN-508 AMWTP Newly Generated Debris **VE Weight** 41.90 lbs

Closure Date 18-MAY-14 07:53:45 **Procedure Id** INST-FOI-17 **Net Weight** 15.90 lbs

Container Type 55 **Revision** 27

Operator 1 AARON FENN **Waste Matrix** S5490 **Summary Category Group** S5000

Operator 2 SHANE HIGH **Equipment ID** VE BiD RPCK

General

Rigid Liner Present? No **Liner Type** NO LINER **Closure Method** No Bags

Liner Punctured? Yes **Layers Of Confinement** 0 **Fill Factor** 70 % **Liner Lid Present** No

Liquids

Liquids Present? No **Comment**

Liquid Between Liner and Drum 0 pints **Other Liquids** 0 pints

Containerized Liquid pints **Total Liquid Amount** 0 pints

Internal Container with Liquid 0 pints

Internal Container with Liquid No

Prohibited Liquids Present No

Containerized Liquid

Contents

Sharp Objects? No **Are Sharp Objects Protected?** Yes

	Value	*Comment*
Prohibited Compressed Gas Present?	No	
Explosives Present?	No	
Pyrophorics Present?	No	
Mercury Present?	No	
PCBs Present?	No	
PCB Mass (lbs)	0	
Wet Cell Batteries Present?	No	
Corrosives,Ignitables or Reactives Present?	No	
Beryllium Contaminates Present?	No	
Hazardous-Only Waste Present?	No	
Is Waste Incompatible with backfill, packaging materials, or shipping container materials?	No	
Sealed Containers Over 4L?	No	

IDC Verification

Is IDC correct? Yes **Recommended IDC** -

IDC Change Reason

Batch Id VEB14-00162 Container Id 10521084 Analysis Id 0000318513

Visual Exam Comment Waste is Plastic consisting of plastic sheeting and tape.

---Source Container---

Is there a source container? Yes

Source Container ID	Location	IDC
10516863	destroyed @ 676- SHD/1	RF-760

---IDC CODES---

Current Container IDC Code: BN-508 **Recommended IDC Code:** -

--- Waste Material Items---

---Packaging Materials---

Material Item	Quantity	Unit	Unit Wt	Item Wt(lbs)

---Waste Items by Weight---

Material Item	Quantity	Unit	Unit Wt	Item Wt(lbs)

---Waste Items by Volume---

Material Item	Quantity	Unit	Unit Wt	Item Wt(lbs)

---Waste Parameters---

Waste Parameter	Remaining Weight %	Actual Weight Lbs
Iron-based Metals/Alloys	0.000	0.000
Aluminum-based Metals/Alloys	0.000	0.000
Other metals	0.000	0.000
Other Inorganic Materials	0.000	0.000
Cellulosics	0.000	0.000
Rubber	0.000	0.000
Plastic (Waste Materials)	100.000	15.895
Inorganic matrix	0.000	0.000
Organic matrix	0.000	0.000
Soils/gravel	0.000	0.000
Steel (packaging materials)	0.000	26.000
Plastic (packaging materials)	0.000	0.000
Cellulosics Packaging	0.000	0.000
MLLW Waste	0.000	0.000

---Esignature History---

Esig Approval Id	User Id	E-signature Date	Comment
2757922	AFENN	18-MAY-14 07:53:45	
2757923	SHIGH	18-MAY-14 07:53:47	

Batch Id VEB14-00162 Container Id 10521002 Analysis Id 0000318514

VE Date 18-MAY-14 08:29:28 Analysis Status Pass
Gen-IDC Code BN-508 AMWTP Newly Generated Debris VE Weight 72.77 lbs
Closure Date 18-MAY-14 08:29:28 Procedure Id INST-FOI-17 Net Weight 46.77 lbs
Container Type 55 Revision 27
Operator 1 AARON FENN Waste Matrix S5490 Summary Category Group S5000
Operator 2 SHANE HIGH Equipment ID VE BiD RPCK

---General---

Rigid Liner Present? No Liner Type NO LINER Closure Method No Bags
Liner Punctured? Yes Layers Of Confinement 0 Fill Factor 72 % Liner Lid Present No

---Liquids---

Liquids Present? No Comment

Liquid Between Liner and Drum 0 pints Other Liquids 0 pints
Containerized Liquid pints Total Liquid Amount 0 pints
Internal Container with Liquid 0 pints

Internal Container with Liquid No

Prohibited Liquids Present No

Containerized Liquid

---Contents---

Sharp Objects? No Are Sharp Objects Protected? Yes

	Value	Comment
Prohibited Compressed Gas Present?	No	
Explosives Present?	No	
Pyrophorics Present?	No	
Mercury Present?	No	
PCBs Present?	No	
PCB Mass (lbs)	0	
Wet Cell Batteries Present?	No	
Corrosives,Ignitables or Reactives Present?	No	
Beryllium Contaminates Present?	No	
Hazardous-Only Waste Present?	No	
Is Waste Incompatible with backfill, packaging materials, or shipping container materials?	No	
Sealed Containers Over 4L?	No	

---IDC Verification---

Is IDC correct? Yes Recommended IDC -

IDC Change Reason

Batch Id VEB14-00162 **Container Id** 10521002 **Analysis Id** 0000318514

Visual Exam Comment Waste is Plastic consisting of plastic sheeting and tape.

---Source Container---

Is there a source container? Yes

Source Container ID	Location	IDC
10516863	destroyed @ 676- SHD/1	RF-760

---IDC CODES---

Current Container IDC Code: BN-508 **Recommended IDC Code:** -

--- Waste Material Items---

---Packaging Materials---

Material Item	Quantity	Unit	Unit Wt	Item Wt(lbs)

---Waste Items by Weight---

Material Item	Quantity	Unit	Unit Wt	Item Wt(lbs)

---Waste Items by Volume---

Material Item	Quantity	Unit	Unit Wt	Item Wt(lbs)
Wood	2.000	PINTS	0.702	1.400

---Waste Parameters---

Waste Parameter	Remaining Weight %	Actual Weight Lbs
Iron-based Metals/Alloys	0.000	0.000
Aluminum-based Metals/Alloys	0.000	0.000
Other metals	0.000	0.000
Other Inorganic Materials	0.000	0.000
Cellulosics	0.000	1.400
Rubber	0.000	0.000
Plastic (Waste Materials)	100.000	45.365
Inorganic matrix	0.000	0.000
Organic matrix	0.000	0.000
Soils/gravel	0.000	0.000
Steel (packaging materials)	0.000	26.000
Plastic (packaging materials)	0.000	0.000
Cellulosics Packaging	0.000	0.000
MLLW Waste	0.000	0.000

---Esignature History---

Esig Approval Id	User Id	E-signature Date	Comment
2757925	AFENN	18-MAY-14 08:29:29	
2757926	SHIGH	18-MAY-14 08:29:33	

Batch Id VEB14-00162 **Container Id** 10521009 **Analysis Id** 0000318515

VE Date 18-MAY-14 08:57:08 **Analysis Status** Pass

Gen-IDC Code BN-508 AMWTP Newly Generated Debris **VE Weight** 77.18 lbs

Closure Date 18-MAY-14 08:57:08 **Procedure Id** INST-FOI-17 **Net Weight** 51.18 lbs

Container Type 55 **Revision** 27

Operator 1 AARON FENN **Waste Matrix** S5490 **Summary Category Group** S5000

Operator 2 SHANE HIGH **Equipment ID** VE BiD RPCK

---General---

Rigid Liner Present? No **Liner Type** NO LINER **Closure Method** No Bags

Liner Punctured? Yes **Layers Of Confinement** 0 **Fill Factor** 70 % **Liner Lid Present** No

---Liquids---

Liquids Present? No **Comment**

Liquid Between Liner and Drum 0 pints **Other Liquids** 0 pints

Containerized Liquid pints **Total Liquid Amount** 0 pints

Internal Container with Liquid 0 pints

Internal Container with Liquid No

Prohibited Liquids Present No

Containerized Liquid

---Contents---

Sharp Objects? No **Are Sharp Objects Protected?** Yes

	Value	*Comment*
Prohibited Compressed Gas Present?	No	
Explosives Present?	No	
Pyrophorics Present?	No	
Mercury Present?	No	
PCBs Present?	No	
PCB Mass (lbs)	0	
Wet Cell Batteries Present?	No	
Corrosives,Ignitables or Reactives Present?	No	
Beryllium Contaminates Present?	No	
Hazardous-Only Waste Present?	No	
Is Waste Incompatible with backfill, packaging materials, or shipping container materials?	No	
Sealed Containers Over 4L?	No	

---IDC Verification---

Is IDC correct? Yes **Recommended IDC** -

IDC Change Reason

Batch Id VEB14-00162 Container Id 10521009 Analysis Id 0000318515

Visual Exam Comment Waste is cellulosics consisting of wood debris.

---Source Container---

Is there a source container? Yes

Source Container ID	Location	IDC
10516863	destroyed @ 676- SHD/1	RF-760

---IDC CODES---

Current Container IDC Code: BN-508 **Recommended IDC Code:** -

--- Waste Material Items---

---Packaging Materials---

Material Item	Quantity	Unit	Unit Wt	Item Wt(lbs)

---Waste Items by Weight---

Material Item	Quantity	Unit	Unit Wt	Item Wt(lbs)

---Waste Items by Volume---

Material Item	Quantity	Unit	Unit Wt	Item Wt(lbs)

---Waste Parameters---

Waste Parameter	Remaining Weight %	Actual Weight Lbs
Iron-based Metals/Alloys	0.000	0.000
Aluminum-based Metals/Alloys	0.000	0.000
Other metals	0.000	0.000
Other Inorganic Materials	0.000	0.000
Cellulosics	100.000	51.175
Rubber	0.000	0.000
Plastic (Waste Materials)	0.000	0.000
Inorganic matrix	0.000	0.000
Organic matrix	0.000	0.000
Soils/gravel	0.000	0.000
Steel (packaging materials)	0.000	26.000
Plastic (packaging materials)	0.000	0.000
Cellulosics Packaging	0.000	0.000
MLLW Waste	0.000	0.000

---Esignature History---

Esig Approval Id	User Id	E-signature Date	Comment
2757932	AFENN	18-MAY-14 08:57:08	
2757933	SHIGH	18-MAY-14 08:57:10	

Batch Id VEB14-00162 Container Id 10521006 Analysis Id 0000318516

VE Date 18-MAY-14 09:31:27 Analysis Status Pass

Gen-IDC Code BN-508 AMWTP Newly Generated Debris VE Weight 92.61 lbs

Closure Date 18-MAY-14 09:31:27 Procedure Id INST-FOI-17 Net Weight 66.61 lbs

Container Type 55 Revision 27

Operator 1 AARON FENN Waste Matrix S5490 Summary Category Group S5000

Operator 2 SHANE HIGH Equipment ID VE BiD RPCK

---General---

Rigid Liner Present? No Liner Type NO LINER Closure Method No Bags

Liner Punctured? Yes Layers Of Confinement 0 Fill Factor 75 % Liner Lid Present No

---Liquids---

Liquids Present? No Comment

Liquid Between Liner and Drum 0 pints Other Liquids 0 pints

Containerized Liquid pints Total Liquid Amount 0 pints

Internal Container with Liquid 0 pints

Internal Container with Liquid No

Prohibited Liquids Present No

Containerized Liquid

---Contents---

Sharp Objects? No Are Sharp Objects Protected? Yes

	Value	Comment
Prohibited Compressed Gas Present?	No	
Explosives Present?	No	
Pyrophorics Present?	No	
Mercury Present?	No	
PCBs Present?	No	
PCB Mass (lbs)	0	
Wet Cell Batteries Present?	No	
Corrosives,Ignitables or Reactives Present?	No	
Beryllium Contaminates Present?	No	
Hazardous-Only Waste Present?	No	
Is Waste Incompatible with backfill, packaging materials, or shipping container materials?	No	
Sealed Containers Over 4L?	No	

---IDC Verification---

Is IDC correct? Yes Recommended IDC -

IDC Change Reason

Batch Id VEB14-00162 Container Id 10521006 Analysis Id 0000318516

Visual Exam Comment Waste is cellulosics consisting of wood debris.

---Source Container---

Is there a source container? Yes

Source Container ID	Location	IDC
10516863	destroyed @ 676- SHD/1	RF-760

---IDC CODES---

Current Container IDC Code: BN-508 **Recommended IDC Code:** -

--- Waste Material Items---

---Packaging Materials---

Material Item	Quantity	Unit	Unit Wt	Item Wt(lbs)

---Waste Items by Weight---

Material Item	Quantity	Unit	Unit Wt	Item Wt(lbs)

---Waste Items by Volume---

Material Item	Quantity	Unit	Unit Wt	Item Wt(lbs)

---Waste Parameters---

Waste Parameter	Remaining Weight %	Actual Weight Lbs
Iron-based Metals/Alloys	0.000	0.000
Aluminum-based Metals/Alloys	0.000	0.000
Other metals	0.000	0.000
Other Inorganic Materials	0.000	0.000
Cellulosics	100.000	66.610
Rubber	0.000	0.000
Plastic (Waste Materials)	0.000	0.000
Inorganic matrix	0.000	0.000
Organic matrix	0.000	0.000
Soils/gravel	0.000	0.000
Steel (packaging materials)	0.000	26.000
Plastic (packaging materials)	0.000	0.000
Cellulosics Packaging	0.000	0.000
MLLW Waste	0.000	0.000

---Esignature History---

Esig Approval Id	User Id	E-signature Date	Comment
2757943	AFENN	18-MAY-14 09:31:28	
2757944	SHIGH	18-MAY-14 09:31:29	

Batch Id VEB14-00162 Container Id 10520997 Analysis Id 0000318517

VE Date 18-MAY-14 09:47:34 Analysis Status Pass

Gen-IDC Code BN-508 AMWTP Newly Generated Debris VE Weight 83.79 lbs

Closure Date 18-MAY-14 09:47:34 Procedure Id INST-FOI-17 Net Weight 57.79 lbs

Container Type 55 Revision 27

Operator 1 AARON FENN Waste Matrix S5490 Summary Category Group S5000

Operator 2 SHANE HIGH Equipment ID VE BiD RPCK

---General---

Rigid Liner Present? No Liner Type NO LINER Closure Method No Bags

Liner Punctured? Yes Layers Of Confinement 0 Fill Factor 70 % Liner Lid Present No

---Liquids---

Liquids Present? No Comment

Liquid Between Liner and Drum 0 pints Other Liquids 0 pints

Containerized Liquid pints Total Liquid Amount 0 pints

Internal Container with Liquid 0 pints

Internal Container with Liquid No

Prohibited Liquids Present No

Containerized Liquid

---Contents---

Sharp Objects? No Are Sharp Objects Protected? Yes

	Value	Comment
Prohibited Compressed Gas Present?	No	
Explosives Present?	No	
Pyrophorics Present?	No	
Mercury Present?	No	
PCBs Present?	No	
PCB Mass (lbs)	0	
Wet Cell Batteries Present?	No	
Corrosives,Ignitables or Reactives Present?	No	
Beryllium Contaminates Present?	No	
Hazardous-Only Waste Present?	No	
Is Waste Incompatible with backfill, packaging materials, or shipping container materials?	No	
Sealed Containers Over 4L?	No	

---IDC Verification---

Is IDC correct? Yes Recommended IDC -

IDC Change Reason

Batch Id VEB14-00162 **Container Id** 10520997 **Analysis Id** 0000318517

Visual Exam Comment Waste is cellulosics consisting of wood debris.

---Source Container---

Is there a source container? Yes

Source Container ID	Location	IDC
10516863	destroyed @ 676- SHD/1	RF-760

---IDC CODES---

Current Container IDC Code: BN-508 **Recommended IDC Code:** -

--- Waste Material Items---

---Packaging Materials---

Material Item	Quantity	Unit	Unit Wt	Item Wt(lbs)

---Waste Items by Weight---

Material Item	Quantity	Unit	Unit Wt	Item Wt(lbs)

---Waste Items by Volume---

Material Item	Quantity	Unit	Unit Wt	Item Wt(lbs)

---Waste Parameters---

Waste Parameter	Remaining Weight %	Actual Weight Lbs
Iron-based Metals/Alloys	0.000	0.000
Aluminum-based Metals/Alloys	0.000	0.000
Other metals	0.000	0.000
Other Inorganic Materials	0.000	0.000
Cellulosics	100.000	57.790
Rubber	0.000	0.000
Plastic (Waste Materials)	0.000	0.000
Inorganic matrix	0.000	0.000
Organic matrix	0.000	0.000
Soils/gravel	0.000	0.000
Steel (packaging materials)	0.000	26.000
Plastic (packaging materials)	0.000	0.000
Cellulosics Packaging	0.000	0.000
MLLW Waste	0.000	0.000

---Esignature History---

Esig Approval Id	User Id	E-signature Date	Comment
2757945	AFENN	18-MAY-14 09:47:35	
2757946	SHIGH	18-MAY-14 09:47:37	

Batch Id VEB14-00162 Container Id 10521038 Analysis Id 0000318518

VE Date 18-MAY-14 10:05:06 Analysis Status Pass

Gen-IDC Code BN-508 AMWTP Newly Generated Debris VE Weight 74.97 lbs

Closure Date 18-MAY-14 10:05:06 Procedure Id INST-FOI-17 Net Weight 48.97 lbs

Container Type 55 Revision 27

Operator 1 AARON FENN Waste Matrix S5490 Summary Category Group S5000

Operator 2 SHANE HIGH Equipment ID VE BiD RPCK

---General---

Rigid Liner Present? No Liner Type NO LINER Closure Method No Bags

Liner Punctured? Yes Layers Of Confinement 0 Fill Factor 70 % Liner Lid Present No

---Liquids---

Liquids Present? No Comment

Liquid Between Liner and Drum 0 pints Other Liquids 0 pints

Containerized Liquid pints Total Liquid Amount 0 pints

Internal Container with Liquid 0 pints

Internal Container with Liquid No

Prohibited Liquids Present No

Containerized Liquid

---Contents---

Sharp Objects? No Are Sharp Objects Protected? Yes

	Value	Comment
Prohibited Compressed Gas Present?	No	
Explosives Present?	No	
Pyrophorics Present?	No	
Mercury Present?	No	
PCBs Present?	No	
PCB Mass (lbs)	0	
Wet Cell Batteries Present?	No	
Corrosives,Ignitables or Reactives Present?	No	
Beryllium Contaminates Present?	No	
Hazardous-Only Waste Present?	No	
Is Waste Incompatible with backfill, packaging materials, or shipping container materials?	No	
Sealed Containers Over 4L?	No	

---IDC Verification---

Is IDC correct? Yes Recommended IDC -

IDC Change Reason

Batch Id VEB14-00162 **Container Id** 10521038 **Analysis Id** 0000318518

Visual Exam Comment Waste is cellulosics consisting of wood debris.

---Source Container---

Is there a source container? Yes

Source Container ID	Location	IDC
10516863	destroyed @ 676- SHD/1	RF-760

---IDC CODES---

Current Container IDC Code: BN-508 **Recommended IDC Code:** -

--- Waste Material Items---

---Packaging Materials---

Material Item	Quantity	Unit	Unit Wt	Item Wt(lbs)

---Waste Items by Weight---

Material Item	Quantity	Unit	Unit Wt	Item Wt(lbs)

---Waste Items by Volume---

Material Item	Quantity	Unit	Unit Wt	Item Wt(lbs)

---Waste Parameters---

Waste Parameter	Remaining Weight %	Actual Weight Lbs
Iron-based Metals/Alloys	0.000	0.000
Aluminum-based Metals/Alloys	0.000	0.000
Other metals	0.000	0.000
Other Inorganic Materials	0.000	0.000
Cellulosics	100.000	48.970
Rubber	0.000	0.000
Plastic (Waste Materials)	0.000	0.000
Inorganic matrix	0.000	0.000
Organic matrix	0.000	0.000
Soils/gravel	0.000	0.000
Steel (packaging materials)	0.000	26.000
Plastic (packaging materials)	0.000	0.000
Cellulosics Packaging	0.000	0.000
MLLW Waste	0.000	0.000

---Esignature History---

Esig Approval Id	User Id	E-signature Date	Comment
2757950	AFENN	18-MAY-14 10:05:06	
2757951	SHIGH	18-MAY-14 10:05:09	

Batch Id VEB14-00162 Container Id 10521007 Analysis Id 0000318519

VE Date 18-MAY-14 10:42:44 Analysis Status Pass

Gen-IDC Code BN-508 AMWTP Newly Generated Debris VE Weight 72.77 lbs

Closure Date 18-MAY-14 10:42:44 Procedure Id INST-FOI-17 Net Weight 46.77 lbs

Container Type 55 Revision 27

Operator 1 AARON FENN Waste Matrix S5490 Summary Category Group S5000

Operator 2 SHANE HIGH Equipment ID VE BiD RPCK

---General---

Rigid Liner Present? No Liner Type NO LINER Closure Method No Bags

Liner Punctured? Yes Layers Of Confinement 0 Fill Factor 65 % Liner Lid Present No

---Liquids---

Liquids Present? No Comment

Liquid Between Liner and Drum 0 pints Other Liquids 0 pints

Containerized Liquid pints Total Liquid Amount 0 pints

Internal Container with Liquid 0 pints

Internal Container with Liquid No

Prohibited Liquids Present No

Containerized Liquid

---Contents---

Sharp Objects? Yes Are Sharp Objects Protected? No

	Value	Comment
Prohibited Compressed Gas Present?	No	
Explosives Present?	No	
Pyrophorics Present?	No	
Mercury Present?	No	
PCBs Present?	No	
PCB Mass (lbs)	0	
Wet Cell Batteries Present?	No	
Corrosives,Ignitables or Reactives Present?	No	
Beryllium Contaminates Present?	No	
Hazardous-Only Waste Present?	No	
Is Waste Incompatible with backfill, packaging materials, or shipping container materials?	No	
Sealed Containers Over 4L?	No	

---IDC Verification---

Is IDC correct? Yes Recommended IDC -

IDC Change Reason

Batch Id VEB14-00162 Container Id 10521007 Analysis Id 0000318519

Visual Exam Comment Waste is cellulosics consisting of wood debris.

---Source Container---

Is there a source container? Yes

Source Container ID	Location	IDC
10516863	destroyed @ 676- SHD/1	RF-760

---IDC CODES---

Current Container IDC Code: BN-508 Recommended IDC Code: -

--- Waste Material Items---

---Packaging Materials---

Material Item	Quantity	Unit	Unit Wt	Item Wt(lbs)

---Waste Items by Weight---

Material Item	Quantity	Unit	Unit Wt	Item Wt(lbs)

---Waste Items by Volume---

Material Item	Quantity	Unit	Unit Wt	Item Wt(lbs)
Iron	0.250	PINTS	7.807	1.950

---Waste Parameters---

Waste Parameter	Remaining Weight %	Actual Weight Lbs
Iron-based Metals/Alloys	0.000	1.950
Aluminum-based Metals/Alloys	0.000	0.000
Other metals	0.000	0.000
Other Inorganic Materials	0.000	0.000
Cellulosics	100.000	44.815
Rubber	0.000	0.000
Plastic (Waste Materials)	0.000	0.000
Inorganic matrix	0.000	0.000
Organic matrix	0.000	0.000
Soils/gravel	0.000	0.000
Steel (packaging materials)	0.000	26.000
Plastic (packaging materials)	0.000	0.000
Cellulosics Packaging	0.000	0.000
MLLW Waste	0.000	0.000

---Esignature History---

Esig Approval Id	User Id	E-signature Date	Comment
2757962	AFENN	18-MAY-14 10:42:45	
2757963	SHIGH	18-MAY-14 10:42:48	

Batch Id VEB14-00162 Container Id 10521040 Analysis Id 0000318520

VE Date 18-MAY-14 11:01:45 Analysis Status Pass

Gen-IDC Code BN-508 AMWTP Newly Generated Debris VE Weight 63.95 lbs

Closure Date 18-MAY-14 11:01:45 Procedure Id INST-FOI-17 Net Weight 37.95 lbs

Container Type 55 Revision 27

Operator 1 AARON FENN Waste Matrix S5490 Summary Category Group S5000

Operator 2 SHANE HIGH Equipment ID VE BiD RPCK

General

Rigid Liner Present? No Liner Type NO LINER Closure Method No Bags

Liner Punctured? Yes Layers Of Confinement 0 Fill Factor 70 % Liner Lid Present No

Liquids

Liquids Present? No Comment

Liquid Between Liner and Drum 0 pints Other Liquids 0 pints

Containerized Liquid pints Total Liquid Amount 0 pints

Internal Container with Liquid 0 pints

Internal Container with Liquid No

Prohibited Liquids Present No

Containerized Liquid

Contents

Sharp Objects? Yes Are Sharp Objects Protected? No

	Value	*Comment*
Prohibited Compressed Gas Present?	No	
Explosives Present?	No	
Pyrophorics Present?	No	
Mercury Present?	No	
PCBs Present?	No	
PCB Mass (lbs)	0	
Wet Cell Batteries Present?	No	
Corrosives,Ignitables or Reactives Present?	No	
Beryllium Contaminates Present?	No	
Hazardous-Only Waste Present?	No	
Is Waste Incompatible with backfill, packaging materials, or shipping container materials?	No	
Sealed Containers Over 4L?	No	

IDC Verification

Is IDC correct? Yes Recommended IDC -

IDC Change Reason

Batch Id VEB14-00162 Container Id 10521040 Analysis Id 0000318520

Visual Exam Comment Waste is cellulosics consisting of wood debris.

---Source Container---

Is there a source container? Yes

Source Container ID	Location	IDC
10516863	destroyed @ 676- SHD/1	RF-760

---IDC CODES---

Current Container IDC Code: BN-508 Recommended IDC Code: -

--- Waste Material Items---

---Packaging Materials---

Material Item	Quantity	Unit	Unit Wt	Item Wt(lbs)

---Waste Items by Weight---

Material Item	Quantity	Unit	Unit Wt	Item Wt(lbs)

---Waste Items by Volume---

Material Item	Quantity	Unit	Unit Wt	Item Wt(lbs)
Iron	0.250	PINTS	7.807	1.950

---Waste Parameters---

Waste Parameter	Remaining Weight %	Actual Weight Lbs
Iron-based Metals/Alloys	0.000	1.950
Aluminum-based Metals/Alloys	0.000	0.000
Other metals	0.000	0.000
Other Inorganic Materials	0.000	0.000
Cellulosics	100.000	35.995
Rubber	0.000	0.000
Plastic (Waste Materials)	0.000	0.000
Inorganic matrix	0.000	0.000
Organic matrix	0.000	0.000
Soils/gravel	0.000	0.000
Steel (packaging materials)	0.000	26.000
Plastic (packaging materials)	0.000	0.000
Cellulosics Packaging	0.000	0.000
MLLW Waste	0.000	0.000

---Esignature History---

Esig Approval Id	User Id	E-signature Date	Comment
2757966	AFENN	18-MAY-14 11:01:46	
2757967	SHIGH	18-MAY-14 11:01:48	

Batch Id VEB14-00162 Container Id 10520996 Analysis Id 0000318523

VE Date 18-MAY-14 12:14:27 Analysis Status Pass

Gen-IDC Code BN-508 AMWTP Newly Generated Debris VE Weight 94.82 lbs

Closure Date 18-MAY-14 12:14:27 Procedure Id INST-FOI-17 Net Weight 68.82 lbs

Container Type 55 Revision 27

Operator 1 SHANE HIGH Waste Matrix S5490 Summary Category Group S5000

Operator 2 AARON FENN Equipment ID VE BiD RPCK

---General---

Rigid Liner Present? No Liner Type NO LINER Closure Method No Bags

Liner Punctured? Yes Layers Of Confinement 0 Fill Factor 70 % Liner Lid Present No

---Liquids---

Liquids Present? No Comment

Liquid Between Liner and Drum 0 pints Other Liquids 0 pints

Containerized Liquid pints Total Liquid Amount 0 pints

Internal Container with Liquid 0 pints

Internal Container with Liquid No

Prohibited Liquids Present No

Containerized Liquid

---Contents---

Sharp Objects? No Are Sharp Objects Protected? Yes

	Value	Comment
Prohibited Compressed Gas Present?	No	
Explosives Present?	No	
Pyrophorics Present?	No	
Mercury Present?	No	
PCBs Present?	No	
PCB Mass (lbs)	0	
Wet Cell Batteries Present?	No	
Corrosives,Ignitables or Reactives Present?	No	
Beryllium Contaminates Present?	No	
Hazardous-Only Waste Present?	No	
Is Waste Incompatible with backfill, packaging materials, or shipping container materials?	No	
Sealed Containers Over 4L?	No	

---IDC Verification---

Is IDC correct? Yes Recommended IDC -

IDC Change Reason

Batch Id VEB14-00162 Container Id 10520996 Analysis Id 0000318523

Visual Exam Comment Waste is cellulosics consisting of wood debris.

---Source Container---

Is there a source container? Yes

Source Container ID	Location	IDC
10516863	destroyed @ 676- SHD/1	RF-760

---IDC CODES---

Current Container IDC Code: BN-508 Recommended IDC Code: -

--- Waste Material Items---

---Packaging Materials---

Material Item	Quantity	Unit	Unit Wt	Item Wt(lbs)

---Waste Items by Weight---

Material Item	Quantity	Unit	Unit Wt	Item Wt(lbs)

---Waste Items by Volume---

Material Item	Quantity	Unit	Unit Wt	Item Wt(lbs)

---Waste Parameters---

Waste Parameter	Remaining Weight %	Actual Weight Lbs
Iron-based Metals/Alloys	0.000	0.000
Aluminum-based Metals/Alloys	0.000	0.000
Other metals	0.000	0.000
Other Inorganic Materials	0.000	0.000
Cellulosics	100.000	68.815
Rubber	0.000	0.000
Plastic (Waste Materials)	0.000	0.000
Inorganic matrix	0.000	0.000
Organic matrix	0.000	0.000
Soils/gravel	0.000	0.000
Steel (packaging materials)	0.000	26.000
Plastic (packaging materials)	0.000	0.000
Cellulosics Packaging	0.000	0.000
MLLW Waste	0.000	0.000

---Esignature History---

Esig Approval Id	User Id	E-signature Date	Comment
2757985	SHIGH	18-MAY-14 12:14:27	
2757986	AFENN	18-MAY-14 12:14:29	

Batch Id VEB14-00162 | Container Id 10521107 | Analysis Id 0000318528

VE Date 18-MAY-14 13:53:04 | Analysis Status Pass

Gen-IDC Code BN-508 AMWTP Newly Generated Debris | VE Weight 110.25 lbs

Closure Date 18-MAY-14 13:53:04 | Procedure Id INST-FOI-17 | Net Weight 84.25 lbs

Container Type 55 | Revision 27

Operator 1 SHANE HIGH | Waste Matrix S5490 | Summary Category Group S5000

Operator 2 AARON FENN | Equipment ID VE BiD RPCK

---General---

Rigid Liner Present? No | Liner Type NO LINER | Closure Method No Bags

Liner Punctured? Yes | Layers Of Confinement 0 | Fill Factor 65 % | Liner Lid Present No

---Liquids---

Liquids Present? No | Comment

Liquid Between Liner and Drum 0 pints | Other Liquids 0 pints

Containerized Liquid pints | Total Liquid Amount 0 pints

Internal Container with Liquid 0 pints

Internal Container with Liquid No

Prohibited Liquids Present No

Containerized Liquid

---Contents---

Sharp Objects? Yes | Are Sharp Objects Protected? No

	Value	Comment
Prohibited Compressed Gas Present?	No	
Explosives Present?	No	
Pyrophorics Present?	No	
Mercury Present?	No	
PCBs Present?	No	
PCB Mass (lbs)	0	
Wet Cell Batteries Present?	No	
Corrosives,Ignitables or Reactives Present?	No	
Beryllium Contaminates Present?	No	
Hazardous-Only Waste Present?	No	
Is Waste Incompatible with backfill, packaging materials, or shipping container materials?	No	
Sealed Containers Over 4L?	No	

---IDC Verification---

Is IDC correct? Yes | Recommended IDC -

IDC Change Reason

Batch Id VEB14-00162 Container Id 10521107 Analysis Id 0000318528

Visual Exam Comment Waste is Iron based metals consisting of scrap metal.

---Source Container---

Is there a source container? Yes

Source Container ID	Location	IDC
10516863	destroyed @ 676- SHD/1	RF-760

---IDC CODES---

Current Container IDC Code: BN-508 Recommended IDC Code: -

--- Waste Material Items---

---Packaging Materials---

Material Item	Quantity	Unit	Unit Wt	Item Wt(lbs)

---Waste Items by Weight---

Material Item	Quantity	Unit	Unit Wt	Item Wt(lbs)

---Waste Items by Volume---

Material Item	Quantity	Unit	Unit Wt	Item Wt(lbs)
Plastic	1.000	PINTS	0.937	0.940

---Waste Parameters---

Waste Parameter	Remaining Weight %	Actual Weight Lbs
Iron-based Metals/Alloys	100.000	83.310
Aluminum-based Metals/Alloys	0.000	0.000
Other metals	0.000	0.000
Other Inorganic Materials	0.000	0.000
Cellulosics	0.000	0.000
Rubber	0.000	0.000
Plastic (Waste Materials)	0.000	0.940
Inorganic matrix	0.000	0.000
Organic matrix	0.000	0.000
Soils/gravel	0.000	0.000
Steel (packaging materials)	0.000	26.000
Plastic (packaging materials)	0.000	0.000
Cellulosics Packaging	0.000	0.000
MLLW Waste	0.000	0.000

---Esignature History---

Esig Approval Id	User Id	E-signature Date	Comment
2758019	SHIGH	18-MAY-14 13:53:04	
2758020	AFENN	18-MAY-14 13:53:06	

Batch Id VEB14-00162 Container Id 10521093 Analysis Id 0000318529

VE Date 18-MAY-14 14:10:38 Analysis Status Pass

Gen-IDC Code BN-508 AMWTP Newly Generated Debris VE Weight 194.04 lbs

Closure Date 18-MAY-14 14:10:38 Procedure Id INST-FOI-17 Net Weight 168.04 lbs

Container Type 55 Revision 27

Operator 1 SHANE HIGH Waste Matrix S5490 Summary Category Group S5000

Operator 2 AARON FENN Equipment ID VE BiD RPCK

---General---

Rigid Liner Present? No Liner Type NO LINER Closure Method No Bags

Liner Punctured? Yes Layers Of Confinement 0 Fill Factor 65 % Liner Lid Present No

---Liquids---

Liquids Present? No Comment

Liquid Between Liner and Drum 0 pints Other Liquids 0 pints

Containerized Liquid pints Total Liquid Amount 0 pints

Internal Container with Liquid 0 pints

Internal Container with Liquid No

Prohibited Liquids Present No

Containerized Liquid

---Contents---

Sharp Objects? Yes Are Sharp Objects Protected? No

	Value	Comment
Prohibited Compressed Gas Present?	No	
Explosives Present?	No	
Pyrophorics Present?	No	
Mercury Present?	No	
PCBs Present?	No	
PCB Mass (lbs)	0	
Wet Cell Batteries Present?	No	
Corrosives,Ignitables or Reactives Present?	No	
Beryllium Contaminates Present?	No	
Hazardous-Only Waste Present?	No	
Is Waste Incompatible with backfill, packaging materials, or shipping container materials?	No	
Sealed Containers Over 4L?	No	

---IDC Verification---

Is IDC correct? Yes Recommended IDC -

IDC Change Reason

Batch Id VEB14-00162 Container Id 10521093 Analysis Id 0000318529

Visual Exam Comment Waste is Iron based metals consisting of scrap metal.

---Source Container---

Is there a source container? Yes

Source Container ID	Location	IDC
10516863	destroyed @ 676- SHD/1	RF-760

---IDC CODES---

Current Container IDC Code: BN-508 Recommended IDC Code: -

--- Waste Material Items---

---Packaging Materials---

Material Item	Quantity	Unit	Unit Wt	Item Wt(lbs)

---Waste Items by Weight---

Material Item	Quantity	Unit	Unit Wt	Item Wt(lbs)

---Waste Items by Volume---

Material Item	Quantity	Unit	Unit Wt	Item Wt(lbs)
Wood	2.000	PINTS	0.702	1.400
Plastic	2.000	PINTS	0.937	1.870

---Waste Parameters---

Waste Parameter	Remaining Weight %	Actual Weight Lbs
Iron-based Metals/Alloys	100.000	164.770
Aluminum-based Metals/Alloys	0.000	0.000
Other metals	0.000	0.000
Other Inorganic Materials	0.000	0.000
Cellulosics	0.000	1.400
Rubber	0.000	0.000
Plastic (Waste Materials)	0.000	1.870
Inorganic matrix	0.000	0.000
Organic matrix	0.000	0.000
Soils/gravel	0.000	0.000
Steel (packaging materials)	0.000	26.000
Plastic (packaging materials)	0.000	0.000
Cellulosics Packaging	0.000	0.000
MLLW Waste	0.000	0.000

---Esignature History---

Esig Approval Id	User Id	E-signature Date	Comment
2758023	SHIGH	18-MAY-14 14:10:38	
2758024	AFENN	18-MAY-14 14:10:40	

AMWTP
Advanced Mixed Waste Treatment Project

AMWTP

VE Boxline and Repackaging Report

Date: 12-Sep-2014

Time: 13:58

Batch Id VEB14-00162 | Container Id 10520994 | Analysis Id 0000318530

VE Date 18-MAY-14 14:25:27 | Analysis Status Pass

Gen-IDC Code BN-508 AMWTP Newly Generated Debris | VE Weight 86.00 lbs

Closure Date 18-MAY-14 14:25:27 | Procedure Id INST-FOI-17 | Net Weight 60.00 lbs

Container Type 55 | Revision 27

Operator 1 SHANE HIGH | Waste Matrix S5490 | Summary Category Group S5000

Operator 2 AARON FENN | Equipment ID VE BiD RPCK

General

Rigid Liner Present? No | Liner Type NO LINER | Closure Method No Bags

Liner Punctured? Yes | Layers Of Confinement 0 | Fill Factor 60 % | Liner Lid Present No

Liquids

Liquids Present? No | Comment

Liquid Between Liner and Drum 0 pints

Containerized Liquid pints

Internal Container with Liquid 0 pints

Other Liquids 0 pints

Total Liquid Amount 0 pints

Internal Container with Liquid No

Prohibited Liquids Present No

Containerized Liquid

Contents

Sharp Objects? Yes | Are Sharp Objects Protected? No

	Value	Comment
Prohibited Compressed Gas Present?	No	
Explosives Present?	No	
Pyrophorics Present?	No	
Mercury Present?	No	
PCBs Present?	No	
PCB Mass (lbs)	0	
Wet Cell Batteries Present?	No	
Corrosives,Ignitables or Reactives Present?	No	
Beryllium Contaminates Present?	No	
Hazardous-Only Waste Present?	No	
Is Waste Incompatible with backfill, packaging materials, or shipping container materials?	No	
Sealed Containers Over 4L?	No	

IDC Verification

Is IDC correct? Yes | Recommended IDC -

IDC Change Reason

Batch Id VEB14-00162 Container Id 10520994 Analysis Id 0000318530

Visual Exam Comment Waste is Iron based metals consisting of scrap metal.

---Source Container---

Is there a source container? Yes

Source Container ID	Location	IDC
10516863	destroyed @ 676- SHD/1	RF-760

---IDC CODES---

Current Container IDC Code: BN-508 Recommended IDC Code: -

--- Waste Material Items---

---Packaging Materials---

Material Item	Quantity	Unit	Unit Wt	Item Wt(lbs)

---Waste Items by Weight---

Material Item	Quantity	Unit	Unit Wt	Item Wt(lbs)

---Waste Items by Volume---

Material Item	Quantity	Unit	Unit Wt	Item Wt(lbs)
Wood	4.000	PINTS	0.702	2.810
Plastic	3.000	PINTS	0.937	2.810

---Waste Parameters---

Waste Parameter	Remaining Weight %	Actual Weight Lbs
Iron-based Metals/Alloys	100.000	54.375
Aluminum-based Metals/Alloys	0.000	0.000
Other metals	0.000	0.000
Other Inorganic Materials	0.000	0.000
Cellulosics	0.000	2.810
Rubber	0.000	0.000
Plastic (Waste Materials)	0.000	2.810
Inorganic matrix	0.000	0.000
Organic matrix	0.000	0.000
Soils/gravel	0.000	0.000
Steel (packaging materials)	0.000	26.000
Plastic (packaging materials)	0.000	0.000
Cellulosics Packaging	0.000	0.000
MLLW Waste	0.000	0.000

---Esignature History---

Esig Approval Id	User Id	E-signature Date	Comment
2758037	SHIGH	18-MAY-14 14:25:28	
2758038	AFENN	18-MAY-14 14:25:31	

AMWTP

VE Boxline and Repackaging Report

Date: 12-Sep-2014

Time: 13:58

Batch Id VEB14-00162 | Container Id 10521100 | Analysis Id 0000318531

VE Date 18-MAY-14 14:36:09 | Analysis Status Pass

Gen-IDC Code BN-508 AMWTP Newly Generated Debris | VE Weight 90.41 lbs

Closure Date 18-MAY-14 14:36:09 | Procedure Id INST-FOI-17 | Net Weight 64.41 lbs

Container Type 55 | Revision 27

Operator 1 SHANE HIGH | Waste Matrix S5490 | Summary Category Group S5000

Operator 2 AARON FENN | Equipment ID VE BiD RPCK

General

Rigid Liner Present? No | Liner Type NO LINER | Closure Method No Bags

Liner Punctured? Yes | Layers Of Confinement 0 | Fill Factor 65 % | Liner Lid Present No

Liquids

Liquids Present? No | Comment

Liquid Between Liner and Drum 0 pints

Containerized Liquid pints

Internal Container with Liquid 0 pints

Other Liquids 0 pints

Total Liquid Amount 0 pints

Internal Container with Liquid No

Prohibited Liquids Present No

Containerized Liquid

Contents

Sharp Objects? Yes | Are Sharp Objects Protected? No

	Value	Comment
Prohibited Compressed Gas Present?	No	
Explosives Present?	No	
Pyrophorics Present?	No	
Mercury Present?	No	
PCBs Present?	No	
PCB Mass (lbs)	0	
Wet Cell Batteries Present?	No	
Corrosives,Ignitables or Reactives Present?	No	
Beryllium Contaminates Present?	No	
Hazardous-Only Waste Present?	No	
Is Waste Incompatible with backfill, packaging materials, or shipping container materials?	No	
Sealed Containers Over 4L?	No	

IDC Verification

Is IDC correct? Yes | Recommended IDC -

IDC Change Reason

Batch Id VEB14-00162 Container Id 10521100 Analysis Id 0000318531

Visual Exam Comment Waste is Iron based metals consisting of scrap metal.

---Source Container---

Is there a source container? Yes

Source Container ID	Location	IDC
10516863	destroyed @ 676- SHD/1	RF-760

---IDC CODES---

Current Container IDC Code: BN-508 Recommended IDC Code: -

--- Waste Material Items---

---Packaging Materials---

Material Item	Quantity	Unit	Unit Wt	Item Wt(lbs)

---Waste Items by Weight---

Material Item	Quantity	Unit	Unit Wt	Item Wt(lbs)

---Waste Items by Volume---

Material Item	Quantity	Unit	Unit Wt	Item Wt(lbs)
Plastic	5.000	PINTS	0.937	4.690

---Waste Parameters---

Waste Parameter	Remaining Weight %	Actual Weight Lbs
Iron-based Metals/Alloys	100.000	59.715
Aluminum-based Metals/Alloys	0.000	0.000
Other metals	0.000	0.000
Other Inorganic Materials	0.000	0.000
Cellulosics	0.000	0.000
Rubber	0.000	0.000
Plastic (Waste Materials)	0.000	4.690
Inorganic matrix	0.000	0.000
Organic matrix	0.000	0.000
Soils/gravel	0.000	0.000
Steel (packaging materials)	0.000	26.000
Plastic (packaging materials)	0.000	0.000
Cellulosics Packaging	0.000	0.000
MLLW Waste	0.000	0.000

---Esignature History---

Esig Approval Id	User Id	E-signature Date	Comment
2758040	SHIGH	18-MAY-14 14:36:09	
2758041	AFENN	18-MAY-14 14:36:12	

Batch Id VEB14-00162 Container Id 10521046 Analysis Id 0000318533

VE Date 18-MAY-14 14:48:28 Analysis Status Pass

Gen-IDC Code BN-508 AMWTP Newly Generated Debris

Closure Date 18-MAY-14 14:48:28

Container Type 55

Operator 1 SHANE HIGH

Operator 2 AARON FENN

Procedure Id INST-FOI-17

Revision 27

Waste Matrix S5490

Equipment ID VE BiD RPCK

VE Weight 108.05 lbs

Net Weight 82.05 lbs

Summary Category Group S5000

---General---

Rigid Liner Present? No Liner Type NO LINER Closure Method No Bags

Liner Punctured? Yes Layers Of Confinement 0 Fill Factor 65 % Liner Lid Present No

---Liquids---

Liquids Present? No Comment

Liquid Between Liner and Drum 0 pints

Containerized Liquid pints

Internal Container with Liquid 0 pints

Other Liquids 0 pints

Total Liquid Amount 0 pints

Internal Container with Liquid No

Prohibited Liquids Present No

Containerized Liquid

---Contents---

Sharp Objects? Yes Are Sharp Objects Protected? No

	Value	Comment
Prohibited Compressed Gas Present?	No	
Explosives Present?	No	
Pyrophorics Present?	No	
Mercury Present?	No	
PCBs Present?	No	
PCB Mass (lbs)	0	
Wet Cell Batteries Present?	No	
Corrosives,Ignitables or Reactives Present?	No	
Beryllium Contaminates Present?	No	
Hazardous-Only Waste Present?	No	
Is Waste Incompatible with backfill, packaging materials, or shipping container materials?	No	
Sealed Containers Over 4L?	No	

---IDC Verification---

Is IDC correct? Yes Recommended IDC -

IDC Change Reason

Batch Id VEB14-00162 Container Id 10521046 Analysis Id 0000318533

Visual Exam Comment Waste is Iron based metals consisting of scrap metal.

---Source Container---

Is there a source container? Yes

Source Container ID	Location	IDC
10516863	destroyed @ 676- SHD/1	RF-760

---IDC CODES---

Current Container IDC Code: BN-508 Recommended IDC Code: -

--- Waste Material Items---

---Packaging Materials---

Material Item	Quantity	Unit	Unit Wt	Item Wt(lbs)

---Waste Items by Weight---

Material Item	Quantity	Unit	Unit Wt	Item Wt(lbs)

---Waste Items by Volume---

Material Item	Quantity	Unit	Unit Wt	Item Wt(lbs)
Fire Brick	1.000	PINTS	3.123	3.120
Plastic	3.000	PINTS	0.937	2.810

---Waste Parameters---

Waste Parameter	Remaining Weight %	Actual Weight Lbs
Iron-based Metals/Alloys	100.000	76.115
Aluminum-based Metals/Alloys	0.000	0.000
Other metals	0.000	0.000
Other Inorganic Materials	0.000	3.120
Cellulosics	0.000	0.000
Rubber	0.000	0.000
Plastic (Waste Materials)	0.000	2.810
Inorganic matrix	0.000	0.000
Organic matrix	0.000	0.000
Soils/gravel	0.000	0.000
Steel (packaging materials)	0.000	26.000
Plastic (packaging materials)	0.000	0.000
Cellulosics Packaging	0.000	0.000
MLLW Waste	0.000	0.000

---Esignature History---

Esig Approval Id	User Id	E-signature Date	Comment
2758045	SHIGH	18-MAY-14 14:48:28	
2758046	AFENN	18-MAY-14 14:48:30	

------End of VE Boxline Report------

Batch Id VEB14-00162 Open Date 17-MAY-14 Close Date 18-MAY-14

Reviewer RONALD GRISE Approval Level Independent Technical Reviewer

Approval Date 25-JUN-14 Review Iteration 1

Question Text	Answer	Requirement	Comment
1. Is the QA documentation for the Batch Data Reports complete and includes data reports and QC results? o VE Batch Coversheet o Table of Contents (manual review only) o VE Analysis Reports o Analytical Balance Calibration Check Sheet (Form-1215), if applicable (manual review only) o ITR Checklist (Form-1415, manual review only) o Batch Data Report Supplemental Comment Form (Form-1491, manual review only) o Associated NCRs (referenced in WTS) o Audio/Video Recording References, if applicable	Yes		
2. Are there 20 containers or less in the batch?	Yes		
3. Was each VE Operator qualified at the time of the VE event?	Yes		
4. Was a VE data form completed for each container in the batch?	Yes		
Was the data generated in a technically correct manner using the correct revision of INST-OI-34, Non-facility Visual Examination or INST-FOI-17, Facility Visual Examination Operations, as applicable.	Yes		
6. Was the correct revision of the procedure documented on each analysis report?	Yes		
7. Was the E-signature History review performed?	Yes		
8. Was guidance from VEE documented, as applicable?	N/A		
9. Does every drum reported in the batch have a valid audio/video recording (as applicable)?	N/A		
10. Does the physical form match the waste stream description, waste matrix code and IDC?	Yes		
11. Did the VE event result in an IDC/Waste Matrix Code change? If so, was an NCR initiated?	No		
12. Were the waste material parameters documented correctly?	Yes		
13. Was the presence or absence of prohibited items properly identified? o If prohibited items were identified, were NCRs initiated?	Yes		
14. Has the description of rigid liners and layers of confinement been properly documented?	Yes		
15. Was the drum age criteria (DAC) entered correctly and completely? o Closure Method(s) o Liner Puncture Status o Layers of Confinement o Closure Date o Packaging Configuration o Type and number of filters, as applicable o Liner hole presence and diameter, as applicable	Yes		
16. Have filters been installed or removed from drum as recorded in WTS, as applicable?	N/A		

Batch Id VEB14-00162 Open Date 17-MAY-14 Close Date 18-MAY-14

Reviewer RONALD GRISE Approval Level Independent Technical Reviewer

Approval Date 25-JUN-14 Review Iteration 1

Question Text	Answer	Requirement	Comment
17. Hand calculations and unit conversions are correct? o Does the packaging weight plus the net weight equal the gross weight of the drum in the estimated waste material parameters, and for the unit conversions that are entered by volume or weight?	Yes		
18. Were all units and significant figures used correct for all reported volumes/weights?	Yes		
19. Has the data been reviewed for transcription errors as appropriate?	Yes		
20. Were the Visual Examination QAOs met? o Precision o Accuracy o Completeness o Comparability	Yes		
21. Is each data form signed by qualified VE Operators, as applicable per the appropriate procedure being used?	Yes		
22. Was the audio/video check satisfactory, as applicable?	N/A		
23. Was the scale or balance check weight event satisfactory, as applicable?	N/A		
24. Are the QC weight checks within the tolerance of the scale or balance, as applicable?	N/A		
25. Were any NCRs generated for drums containing prohibited items or any nonconforming conditions that failed to meet DQOs or QAOs? o Include the NCRs as appropriate, in the Batch Data Report.	No		
26. Were the rework requirements clearly identified in WTS or on the BDR?	N/A		

Batch Id VEB14-00162 **Open Date** 17-MAY-14 **Close Date** 18-MAY-14

Reviewer L.J. WALKER **Approval Level** Independent Technical Reviewer

Approval Date 26-JUN-14 **Review Iteration** 2

Question Text	Answer	Requirement	Comment
1. Is the QA documentation for the Batch Data Reports complete and includes data reports and QC results? o VE Batch Coversheet o Table of Contents (manual review only) o VE Analysis Reports o Analytical Balance Calibration Check Sheet (Form-1215), if applicable (manual review only) o ITR Checklist (Form-1415, manual review only) o Batch Data Report Supplemental Comment Form (Form-1491, manual review only) o Associated NCRs (referenced in WTS) o Audio/Video Recording References, if applicable	Yes		
2. Are there 20 containers or less in the batch?	Yes		
3. Was each VE Operator qualified at the time of the VE event?	Yes		
4. Was a VE data form completed for each container in the batch?	Yes		
Was the data generated in a technically correct manner using the correct revision of INST-OI-34, Non-facility Visual Examination or INST-FOI-17, Facility Visual Examination Operations, as applicable.	Yes		
6. Was the correct revision of the procedure documented on each analysis report?	Yes		
7. Was the E-signature History review performed?	Yes		
8. Was guidance from VEE documented, as applicable?	N/A		
9. Does every drum reported in the batch have a valid audio/video recording (as applicable)?	N/A		
10. Does the physical form match the waste stream description, waste matrix code and IDC?	Yes		
11. Did the VE event result in an IDC/Waste Matrix Code change? If so, was an NCR initiated?	No		
12. Were the waste material parameters documented correctly?	Yes		
13. Was the presence or absence of prohibited items properly identified? o If prohibited items were identified, were NCRs initiated?	Yes		
14. Has the description of rigid liners and layers of confinement been properly documented?	Yes		
15. Was the drum age criteria (DAC) entered correctly and completely? o Closure Method(s) o Liner Puncture Status o Layers of Confinement o Closure Date o Packaging Configuration o Type and number of filters, as applicable o Liner hole presence and diameter, as applicable	Yes		
16. Have filters been installed or removed from drum as recorded in WTS, as applicable?	N/A		

Batch Id VEB14-00162 Open Date 17-MAY-14 Close Date 18-MAY-14

Reviewer L.J. WALKER Approval Level Independent Technical Reviewer

Approval Date 26-JUN-14 Review Iteration 2

Question Text	Answer	Requirement	Comment
17. Hand calculations and unit conversions are correct? o Does the packaging weight plus the net weight equal the gross weight of the drum in the estimated waste material parameters, and for the unit conversions that are entered by volume or weight?	Yes		
18. Were all units and significant figures used correct for all reported volumes/weights?	Yes		
19. Has the data been reviewed for transcription errors as appropriate?	Yes		
20. Were the Visual Examination QAOs met? o Precision o Accuracy o Completeness o Comparability	Yes		
21. Is each data form signed by qualified VE Operators, as applicable per the appropriate procedure being used?	Yes		
22. Was the audio/video check satisfactory, as applicable?	N/A		
23. Was the scale or balance check weight event satisfactory, as applicable?	N/A		
24. Are the QC weight checks within the tolerance of the scale or balance, as applicable?	N/A		
25. Were any NCRs generated for drums containing prohibited items or any nonconforming conditions that failed to meet DQOs or QAOs? o Include the NCRs as appropriate, in the Batch Data Report.	No		
26. Were the rework requirements clearly identified in WTS or on the BDR?	N/A		

Batch Id VEB14-00162 Open Date 17-MAY-14 Close Date 18-MAY-14

Reviewer REED WALKER Approval Level SPM Data Validation

Approval Date 26-JUN-14 Review Iteration 1

Question Text	Answer	Requirement	Comment
(1) Has the batch received a Data Generation Level Independent Technical Review?	Yes	MP-TRUW-8.2, C3-10b(1)	
(2) Are the batch data review checklists complete?	No	MP-TRUW-8.2, C3-10b(1)	See batch comments.
(3) When identified, were PCBs, mercury, lead, or other hazardous contaminants consistent with the waste stream AK Summary Report(s) and/or AK documentation?	N/A	MP-TRUW-8.2, C4-3	None were identified.
(4) Are any ignitable, corrosive, or reactive wastes identified?	No	MP-TRUW-8.2, C4-3	
(5) Are the packaging configurations identified on the VE consistent with the waste stream AK Summary Report(s) and/or AK documentation?	Yes	MP-TRUW-8.2, C4-3	
(6) Do the drums in this batch contain typical waste items consistent with waste stream AK Summary Report(s) and/or AK documentation?	Yes	MP-TRUW-8.2, C4-3	
(7) Are the Waste Matrix Codes and physical form descriptions consistent with AK?	Yes	MP-TRUW-8.2, C4-3	
(8) Have all AK discrepancies been resolved and have all AK Resolution checklists been approved? Reference all waste stream AK documentation used in review of this data package.	N/A	MP-TRUW-8.2, C4-3	No discrepancies identified.
(9) Does the batch report identify the correct implementing procedure number and revision number used for this testing method?	Yes	MP-TRUW-8.2, C3-4 and Table C3-11	
(10) Have the Waste Matrix Code (WMC) and IDC for all drums in the batch remained the same as originally assigned by the historical designation? NOTE: If not, note the drum number in the comment field and notify the Acceptable Knowledge Expert (AKE) if an NCR does not exist for the WMC and IDC change.	Yes	MP-TRUW-8.2, C-3c and C1-4	
(11) Does the physical form of the waste match the WMC, waste stream description, and identify the absence of prohibited items?	Yes	MP-TRUW-8.2, C-3c and C1-4	
(12) If observable liquids exist in the drum, is an estimate of quantity given?	N/A	MP-TRUW-8.2, C-3c and C1-4	No liquids identified.
(13) Precision: Have all discrepancies been reconciled between the operator and the ITR with regard to identification of WMC, liquids in excess of TSDF-WAC limits, and compressed gases?	Yes	MP-TRUW-8.2 C3-4b	
(14) Accuracy: Have all operators passed a comprehensive examination and demonstrated satisfactory performance in the presence of the VE expert during initial and subsequent qualifications?	Yes	MP-TRUW-8.2 C3-4b	
(15) Completeness: Has a validated VE data form been obtained for 100% of the waste containers subject to VE?	Yes	MP-TRUW-8.2 C3-4b	
(16) Comparability: Has the comparability of VE data from different operators been enhanced by use of standardized VE procedures and operator qualifications?	Yes	MP-TRUW-8.2 C3-4b	
(17) Does the data for all containers within this batch meet the review, validation, and verification requirements?	Yes	MP-TRUW-8.2, C3-10b and Table C3-11	

Batch Id VEB14-00162 Open Date 17-MAY-14 Close Date 18-MAY-14

Reviewer REED WALKER Approval Level SPM Data Validation

Approval Date 26-JUN-14 Review Iteration 1

Question Text	Answer	Requirement	Comment
· Are proper units (e.g. Liters or pounds) and significant figure used? · Is the BDR complete (all pages identified in the BDR and numbered according)? - VE Batch Coversheet - Table of Contents (manual review only) - VE Analysis Reports - Analytical Balance Calibration Checklist (if applicable) - ITR Checklist (Form-1415) - Associated NCRs - Audio/Video Recordings (if applicable)			
(18) Do the drum reports contain the (a) Batch Data Report number and date, (b) waste container number (c)WMC, (d) implementing procedure and revision, (e) audio/video recording reference, (f) audio and video QC checks were performed and satisfactory, (g) verification that the physical form matches the waste stream description and WMC, (h) absence of prohibited items, (i) gross container weight, (j) waste material parameter weights, and (k) signature and date of examination (signatures of both operators when applicable)?	Yes	MP-TRUW-8.2, C1-4 and Table C3-11	
(19) Is the description of container contents detailed enough to provide verification of estimated weights for the waste matrix parameters identified?	Yes	MP-TRUW-8.2, C1-4 and Table C3-11	
(20) Is there a valid second weight check for every 10 items?	N/A	MP-TRUW-8.2, C1-4	Not required for this batch.
(21) Verification of two operator signatures when doing VE?	Yes	MP-TRUW-8.2, C-3d(1) and Table C3-11	
(22) Are there 20 or fewer containers in the batch?	Yes	MP-TRUW-8.2, C1-3 and C3-10	
(23) Review all NCRs (open and closed). Can the batch be approved?	Yes	MP-TRUW-8.2, C3-13	No NCRs.
(24) All data associated with this BDR is acceptable for signature release?	No	MP-TRUW-8.2, C3-10b and C3-10b(1)	See batch comments.

Batch Id VEB14-00162 Open Date 17-MAY-14 Close Date 18-MAY-14

Reviewer REED WALKER Approval Level SPM Data Validation

Approval Date 26-JUN-14 Review Iteration 2

Question Text	Answer	Requirement	Comment
(1) Has the batch received a Data Generation Level Independent Technical Review?	Yes	MP-TRUW-8.2, C3-10b(1)	
(2) Are the batch data review checklists complete?	Yes	MP-TRUW-8.2, C3-10b(1)	
(3) When identified, were PCBs, mercury, lead, or other hazardous contaminants consistent with the waste stream AK Summary Report(s) and/or AK documentation?	N/A	MP-TRUW-8.2, C4-3	None were identified.
(4) Are any ignitable, corrosive, or reactive wastes identified?	No	MP-TRUW-8.2, C4-3	
(5) Are the packaging configurations identified on the VE consistent with the waste stream AK Summary Report(s) and/or AK documentation?	Yes	MP-TRUW-8.2, C4-3	
(6) Do the drums in this batch contain typical waste items consistent with waste stream AK Summary Report(s) and/or AK documentation?	Yes	MP-TRUW-8.2, C4-3	
(7) Are the Waste Matrix Codes and physical form descriptions consistent with AK?	Yes	MP-TRUW-8.2, C4-3	
(8) Have all AK discrepancies been resolved and have all AK Resolution checklists been approved? Reference all waste stream AK documentation used in review of this data package.	N/A	MP-TRUW-8.2, C4-3	No discrepancies identified.
(9) Does the batch report identify the correct implementing procedure number and revision number used for this testing method?	Yes	MP-TRUW-8.2, C3-4 and Table C3-11	
(10) Have the Waste Matrix Code (WMC) and IDC for all drums in the batch remained the same as originally assigned by the historical designation? NOTE: If not, note the drum number in the comment field and notify the Acceptable Knowledge Expert (AKE) if an NCR does not exist for the WMC and IDC change.	Yes	MP-TRUW-8.2, C-3c and C1-4	
(11) Does the physical form of the waste match the WMC, waste stream description, and identify the absence of prohibited items?	Yes	MP-TRUW-8.2, C-3c and C1-4	
(12) If observable liquids exist in the drum, is an estimate of quantity given?	N/A	MP-TRUW-8.2, C-3c and C1-4	No liquids identified.
(13) Precision: Have all discrepancies been reconciled between the operator and the ITR with regard to identification of WMC, liquids in excess of TSDF-WAC limits, and compressed gases?	Yes	MP-TRUW-8.2 C3-4b	
(14) Accuracy: Have all operators passed a comprehensive examination and demonstrated satisfactory performance in the presence of the VE expert during initial and subsequent qualifications?	Yes	MP-TRUW-8.2 C3-4b	
(15) Completeness: Has a validated VE data form been obtained for 100% of the waste containers subject to VE?	Yes	MP-TRUW-8.2 C3-4b	
(16) Comparability: Has the comparability of VE data from different operators been enhanced by use of standardized VE procedures and operator qualifications?	Yes	MP-TRUW-8.2 C3-4b	
(17) Does the data for all containers within this batch meet the review, validation, and verification requirements?	Yes	MP-TRUW-8.2, C3-10b and Table C3-11	

Batch Id VEB14-00162 Open Date 17-MAY-14 Close Date 18-MAY-14

Reviewer REED WALKER Approval Level SPM Data Validation

Approval Date 26-JUN-14 Review Iteration 2

Question Text	Answer	Requirement	Comment
· Are proper units (e.g. Liters or pounds) and significant figure used? · Is the BDR complete (all pages identified in the BDR and numbered according)? - VE Batch Coversheet - Table of Contents (manual review only) - VE Analysis Reports - Analytical Balance Calibration Checklist (if applicable) - ITR Checklist (Form-1415) - Associated NCRs - Audio/Video Recordings (if applicable)			
(18) Do the drum reports contain the (a) Batch Data Report number and date, (b) waste container number (c)WMC, (d) implementing procedure and revision, (e) audio/video recording reference, (f) audio and video QC checks were performed and satisfactory, (g) verification that the physical form matches the waste stream description and WMC, (h) absence of prohibited items, (i) gross container weight, (j) waste material parameter weights, and (k) signature and date of examination (signatures of both operators when applicable)?	Yes	MP-TRUW-8.2, C1-4 and Table C3-11	
(19) Is the description of container contents detailed enough to provide verification of estimated weights for the waste matrix parameters identified?	Yes	MP-TRUW-8.2, C1-4 and Table C3-11	
(20) Is there a valid second weight check for every 10 items?	N/A	MP-TRUW-8.2, C1-4	Not required for this batch.
(21) Verification of two operator signatures when doing VE?	Yes	MP-TRUW-8.2, C-3d(1) and Table C3-11	
(22) Are there 20 or fewer containers in the batch?	Yes	MP-TRUW-8.2, C1-3 and C3-10	
(23) Review all NCRs (open and closed). Can the batch be approved?	Yes	MP-TRUW-8.2, C3-13	No NCRs.
(24) All data associated with this BDR is acceptable for signature release?	Yes	MP-TRUW-8.2, C3-10b and C3-10b(1)	

Batch Id VEB14-00162 Open Date 17-MAY-14 Close Date 18-MAY-14

Esignature History

Esig Approval ID	User ID	Esig Date	Approval Level	Comments
2782197	RWALKER	26-JUN-14	SPM	SPM validation complete. Promote batch.
2782195	LJWALKER	26-JUN-14	ITR	Promote to update Checklist to Rev 37
2782080	RWALKER	26-JUN-14	SPM	Demoted batch back to the ITR level for the correct revision of the ITR checklist.
2781685	RGRISE	25-JUN-14	ITR	Promote batch to SPM level.

AMWTP
Advanced Mixed Waste Treatment Project

AMWTP

Non-Conformance Report

Date: 12-Sep-2014

Time: 14:02

*****Batch NCR(s)*****

Batch Type	VEB	Batch ID	VEB14-00162		
Trackwise Number		Status		Opened Date	Closed Date

*****Container NCR(s)*****

Container ID *or related Batch ID*	Trackwise Number	Status	Opened Date	Closed Date

*****End of Non-Conformance Report*****

DIVIDER

PAGE

AMWTP
Advanced Mixed Waste Treatment Project

AMWTP

Batch Report Coversheet

Date: 12-Sep-2014

Time: 14:32

Batch Type VE Boxline
Batch Report No. VEB14-00254
Batch Id VEB14-00254
Open Date 25-AUG-14 03:41:04
Close Date 25-AUG-14 21:56:15
Batch Status AP
Test Facility Idaho AMWTP
Equipment Id VE BiD RPCK VE Box Repackaging Into Drums

Container Id	IDC	Analysis Id	Date Examined	QC Type	Analysis Status	Operator
10527579	BN-508	0000321401	25-AUG-14 03:41:04	Original	P	MICHAEL BECK
10527571	BN-508	0000321402	25-AUG-14 04:00:51	Original	P	MICHAEL BECK
10527580	BN-508	0000321406	25-AUG-14 04:49:59	Original	P	MICHAEL BECK
10527600	BN-508	0000321407	25-AUG-14 05:26:01	Original	P	MICHAEL BECK
10527955	BN-508	0000321408	25-AUG-14 07:56:30	Original	P	GUY MATLOCK
10527919	BN-508	0000321409	25-AUG-14 09:02:03	Original	P	GUY MATLOCK
10527940	BN-508	0000321410	25-AUG-14 09:45:36	Original	P	GUY MATLOCK
10527923	BN-508	0000321411	25-AUG-14 10:16:57	Original	P	GUY MATLOCK
10527935	BN-508	0000321414	25-AUG-14 10:41:57	Original	P	GUY MATLOCK
10527926	BN-508	0000321418	25-AUG-14 11:03:31	Original	P	ROBERT PURCELL
10527785	BN-508	0000321419	25-AUG-14 11:28:52	Original	P	ROBERT PURCELL
10527922	BN-508	0000321420	25-AUG-14 12:40:33	Original	P	ROBERT PURCELL
10527933	BN-508	0000321421	25-AUG-14 13:03:00	Original	P	ROBERT PURCELL
10527927	BN-508	0000321422	25-AUG-14 13:24:22	Original	P	ROBERT PURCELL
10527782	BN-508	0000321427	25-AUG-14 14:06:39	Original	P	ROBERT PURCELL
10527918	BN-508	0000321429	25-AUG-14 14:53:52	Original	P	GUY MATLOCK
10527956	BN-508	0000321433	25-AUG-14 15:23:20	Original	P	GUY MATLOCK
10527925	BN-508	0000321434	25-AUG-14 16:13:02	Original	P	GUY MATLOCK
10527943	BN-508	0000321440	25-AUG-14 16:48:17	Original	P	GUY MATLOCK
10527946	BN-508	0000321443	25-AUG-14 21:55:15	Original	P	HOWARD SHELL

INFORMATION ONLY

**********Batch Comments**********

Written By	Date	Comment
RGRISE	26-AUG-14 07:51:49	Initial validation performed electronically per MP-TRUW-8.8
RGRISE	26-AUG-14 07:51:49	Promote batch to SPM level.
RWALKER	26-AUG-14 12:18:31	SPM validation complete. Promote batch.

AMWTP

Batch Report Coversheet

Date: 12-Sep-2014

Time: 14:32

**********Batch E-Signature History**********

Approval ID	User ID	Signature Date	Comment
2819936	RGRISE	26-AUG-2014 07:51:50	Promote batch to SPM level.
2822550	RWALKER	26-AUG-2014 12:18:32	SPM validation complete. Promote batch.

***** End of Batch Report Coversheet Report *****

AMWTP
Advanced Mixed Waste Treatment Project

AMWTP

VE Boxline and Repackaging Report

Date: 12-Sep-2014

Time: 14:32

Batch Id VEB14-00254 **Container Id** 10527579 **Analysis Id** 0000321401

VE Date 25-AUG-14 03:41:04 **Analysis Status** Pass

Gen-IDC Code BN-508 AMWTP Newly Generated Debris **VE Weight** 143.33 lbs

Closure Date 25-AUG-14 03:41:04 **Procedure Id** INST-FOI-17 **Net Weight** 117.33 lbs

Container Type 55 **Revision** 27

Operator 1 MICHAEL BECK **Waste Matrix** S5490 **Summary Category Group** S5000

Operator 2 KEN DOWNS **Equipment ID** VE BiD RPCK

General

Rigid Liner Present? No **Liner Type** NO LINER **Closure Method** No Bags

Liner Punctured? Yes **Layers Of Confinement** 0 **Fill Factor** 75 % **Liner Lid Present** No

Liquids

Liquids Present? No **Comment**

Liquid Between Liner and Drum 0 pints **Other Liquids** 0 pints

Containerized Liquid pints **Total Liquid Amount** 0 pints

Internal Container with Liquid 0 pints

Internal Container with Liquid No

Prohibited Liquids Present No

Containerized Liquid

Contents

Sharp Objects? Yes **Are Sharp Objects Protected?** No

	Value	*Comment*
Prohibited Compressed Gas Present?	No	
Explosives Present?	No	
Pyrophorics Present?	No	
Mercury Present?	No	
PCBs Present?	No	
PCB Mass (lbs)	0	
Wet Cell Batteries Present?	No	
Corrosives,Ignitables or Reactives Present?	No	
Beryllium Contaminates Present?	No	
Hazardous-Only Waste Present?	No	
Is Waste Incompatible with backfill, packaging materials, or shipping container materials?	No	
Sealed Containers Over 4L?	No	

IDC Verification

Is IDC correct? Yes **Recommended IDC** -

IDC Change Reason

Batch Id VEB14-00254 **Container Id** 10527579 **Analysis Id** 0000321401

Visual Exam Comment Remaining waste by weight percent is Iron Based Metal / Alloy consisting of scrap metal.

---Source Container---

Is there a source container? Yes

Source Container ID	Location	IDC
10526886	destroyed @ 676- BXI/9	BN-519

---IDC CODES---

Current Container IDC Code: BN-508 **Recommended IDC Code:** -

--- Waste Material Items---

---Packaging Materials---

Material Item	Quantity	Unit	Unit Wt	Item Wt(lbs)

---Waste Items by Weight---

Material Item	Quantity	Unit	Unit Wt	Item Wt(lbs)

---Waste Items by Volume---

Material Item	Quantity	Unit	Unit Wt	Item Wt(lbs)
Oil-Dri (Inside 55 gal drum)	4.000	PINTS	0.420	1.680
Glass	2.000	PINTS	2.082	4.160
Plastic	10.000	PINTS	0.937	9.370

---Waste Parameters---

Waste Parameter	Remaining Weight %	Actual Weight Lbs
Iron-based Metals/Alloys	100.000	102.115
Aluminum-based Metals/Alloys	0.000	0.000
Other metals	0.000	0.000
Other Inorganic Materials	0.000	5.840
Cellulosics	0.000	0.000
Rubber	0.000	0.000
Plastic (Waste Materials)	0.000	9.370
Inorganic matrix	0.000	0.000
Organic matrix	0.000	0.000
Soils/gravel	0.000	0.000
Steel (packaging materials)	0.000	26.000
Plastic (packaging materials)	0.000	0.000
Cellulosics Packaging	0.000	0.000
MLLW Waste	0.000	0.000

---Esignature History---

Esig Approval Id	User Id	E-signature Date	Comment
2819178	MBECK1	25-AUG-14 03:41:05	
2819179	KDOWNS	25-AUG-14 03:41:07	

Batch Id VEB14-00254 **Container Id** 10527571 **Analysis Id** 0000321402

VE Date 25-AUG-14 04:00:51 **Analysis Status** Pass

Gen-IDC Code BN-508 AMWTP Newly Generated Debris **VE Weight** 174.20 lbs

Closure Date 25-AUG-14 04:00:51 **Procedure Id** INST-FOI-17 **Net Weight** 148.20 lbs

Container Type 55 **Revision** 27

Operator 1 MICHAEL BECK **Waste Matrix** S5490 **Summary Category Group** S5000

Operator 2 KEN DOWNS **Equipment ID** VE BiD RPCK

General

Rigid Liner Present? No **Liner Type** NO LINER **Closure Method** No Bags

Liner Punctured? Yes **Layers Of Confinement** 0 **Fill Factor** 70 % **Liner Lid Present** No

Liquids

Liquids Present? No **Comment**

Liquid Between Liner and Drum 0 pints **Other Liquids** 0 pints

Containerized Liquid pints **Total Liquid Amount** 0 pints

Internal Container with Liquid 0 pints

Internal Container with Liquid No

Prohibited Liquids Present No

Containerized Liquid

Contents

Sharp Objects? Yes **Are Sharp Objects Protected?** No

	Value	*Comment*
Prohibited Compressed Gas Present?	No	
Explosives Present?	No	
Pyrophorics Present?	No	
Mercury Present?	No	
PCBs Present?	No	
PCB Mass (lbs)	0	
Wet Cell Batteries Present?	No	
Corrosives,Ignitables or Reactives Present?	No	
Beryllium Contaminates Present?	No	
Hazardous-Only Waste Present?	No	
Is Waste Incompatible with backfill, packaging materials, or shipping container materials?	No	
Sealed Containers Over 4L?	No	

IDC Verification

Is IDC correct? Yes **Recommended IDC** -

IDC Change Reason

Batch Id VEB14-00254 **Container Id** 10527571 **Analysis Id** 0000321402

Visual Exam Comment Remaining waste by weight percent is Iron Based Metal / Alloy consisting of scrap metal.

---Source Container---

Is there a source container? Yes

Source Container ID	Location	IDC
10526886	destroyed @ 676- BXI/9	BN-519

---IDC CODES---

Current Container IDC Code: BN-508 **Recommended IDC Code:** -

--- Waste Material Items---

---Packaging Materials---

Material Item	Quantity	Unit	Unit Wt	Item Wt(lbs)

---Waste Items by Weight---

Material Item	Quantity	Unit	Unit Wt	Item Wt(lbs)

---Waste Items by Volume---

Material Item	Quantity	Unit	Unit Wt	Item Wt(lbs)
Oil-Dri (Inside 55 gal drum)	20.000	PINTS	0.420	8.400
Glass	4.000	PINTS	2.082	8.330
Plastic	2.000	PINTS	0.937	1.870

---Waste Parameters---

Waste Parameter	Remaining Weight %	Actual Weight Lbs
Iron-based Metals/Alloys	100.000	129.595
Aluminum-based Metals/Alloys	0.000	0.000
Other metals	0.000	0.000
Other Inorganic Materials	0.000	16.730
Cellulosics	0.000	0.000
Rubber	0.000	0.000
Plastic (Waste Materials)	0.000	1.870
Inorganic matrix	0.000	0.000
Organic matrix	0.000	0.000
Soils/gravel	0.000	0.000
Steel (packaging materials)	0.000	26.000
Plastic (packaging materials)	0.000	0.000
Cellulosics Packaging	0.000	0.000
MLLW Waste	0.000	0.000

---Esignature History---

Esig Approval Id	User Id	E-signature Date	Comment
2819192	MBECK1	25-AUG-14 04:00:52	
2819193	KDOWNS	25-AUG-14 04:00:54	

Batch Id VEB14-00254 **Container Id** 10527580 **Analysis Id** 0000321406

VE Date 25-AUG-14 04:49:59 **Analysis Status** Pass

Gen-IDC Code BN-508 AMWTP Newly Generated Debris **VE Weight** 130.10 lbs

Closure Date 25-AUG-14 04:49:59 **Procedure Id** INST-FOI-17 **Net Weight** 104.10 lbs

Container Type 55 **Revision** 27

Operator 1 MICHAEL BECK **Waste Matrix** S5490 **Summary Category Group** S5000

Operator 2 KEN DOWNS **Equipment ID** VE BiD RPCK

---General---

Rigid Liner Present? No **Liner Type** NO LINER **Closure Method** No Bags

Liner Punctured? Yes **Layers Of Confinement** 0 **Fill Factor** 70 % **Liner Lid Present** No

---Liquids---

Liquids Present? No **Comment**

Liquid Between Liner and Drum 0 pints **Other Liquids** 0 pints

Containerized Liquid pints **Total Liquid Amount** 0 pints

Internal Container with Liquid 0 pints

Internal Container with Liquid No

Prohibited Liquids Present No

Containerized Liquid

---Contents---

Sharp Objects? Yes **Are Sharp Objects Protected?** No

	Value	*Comment*
Prohibited Compressed Gas Present?	No	
Explosives Present?	No	
Pyrophorics Present?	No	
Mercury Present?	No	
PCBs Present?	No	
PCB Mass (lbs)	0	
Wet Cell Batteries Present?	No	
Corrosives,Ignitables or Reactives Present?	No	
Beryllium Contaminates Present?	No	
Hazardous-Only Waste Present?	No	
Is Waste Incompatible with backfill, packaging materials, or shipping container materials?	No	
Sealed Containers Over 4L?	No	

---IDC Verification---

Is IDC correct? Yes **Recommended IDC** -

IDC Change Reason

Batch Id VEB14-00254 **Container Id** 10527580 **Analysis Id** 0000321406

Visual Exam Comment Remaining waste by weight percent is Iron Based Metal / Alloy consisting of scrap metal.

---Source Container---

Is there a source container? Yes

Source Container ID	Location	IDC
10526886	destroyed @ 676- BXI/9	BN-519

---IDC CODES---

Current Container IDC Code: BN-508 **Recommended IDC Code:** -

--- Waste Material Items---

---Packaging Materials---

Material Item	Quantity	Unit	Unit Wt	Item Wt(lbs)

---Waste Items by Weight---

Material Item	Quantity	Unit	Unit Wt	Item Wt(lbs)

---Waste Items by Volume---

Material Item	Quantity	Unit	Unit Wt	Item Wt(lbs)
Paper	4.000	PINTS	0.969	3.880
Plastic	6.000	PINTS	0.937	5.620

---Waste Parameters---

Waste Parameter	Remaining Weight %	Actual Weight Lbs
Iron-based Metals/Alloys	100.000	94.595
Aluminum-based Metals/Alloys	0.000	0.000
Other metals	0.000	0.000
Other Inorganic Materials	0.000	0.000
Cellulosics	0.000	3.880
Rubber	0.000	0.000
Plastic (Waste Materials)	0.000	5.620
Inorganic matrix	0.000	0.000
Organic matrix	0.000	0.000
Soils/gravel	0.000	0.000
Steel (packaging materials)	0.000	26.000
Plastic (packaging materials)	0.000	0.000
Cellulosics Packaging	0.000	0.000
MLLW Waste	0.000	0.000

---Esignature History---

Esig Approval Id	User Id	E-signature Date	Comment
2819218	MBECK1	25-AUG-14 04:49:59	
2819219	KDOWNS	25-AUG-14 04:50:03	

Batch Id VEB14-00254 **Container Id** 10527600 **Analysis Id** 0000321407

VE Date 25-AUG-14 05:26:01 **Analysis Status** Pass

Gen-IDC Code BN-508 AMWTP Newly Generated Debris **VE Weight** 136.71 lbs

Closure Date 25-AUG-14 05:26:01 **Procedure Id** INST-FOI-17 **Net Weight** 110.71 lbs

Container Type 55 **Revision** 27

Operator 1 MICHAEL BECK **Waste Matrix** S5490 **Summary Category Group** S5000

Operator 2 KEN DOWNS **Equipment ID** VE BiD RPCK

---General---

Rigid Liner Present? No **Liner Type** NO LINER **Closure Method** No Bags

Liner Punctured? Yes **Layers Of Confinement** 0 **Fill Factor** 70 % **Liner Lid Present** No

---Liquids---

Liquids Present? No **Comment**

Liquid Between Liner and Drum 0 pints **Other Liquids** 0 pints

Containerized Liquid pints **Total Liquid Amount** 0 pints

Internal Container with Liquid 0 pints

Internal Container with Liquid No

Prohibited Liquids Present No

Containerized Liquid

---Contents---

Sharp Objects? Yes **Are Sharp Objects Protected?** No

	Value	*Comment*
Prohibited Compressed Gas Present?	No	
Explosives Present?	No	
Pyrophorics Present?	No	
Mercury Present?	No	
PCBs Present?	No	
PCB Mass (lbs)	0	
Wet Cell Batteries Present?	No	
Corrosives,Ignitables or Reactives Present?	No	
Beryllium Contaminates Present?	No	
Hazardous-Only Waste Present?	No	
Is Waste Incompatible with backfill, packaging materials, or shipping container materials?	No	
Sealed Containers Over 4L?	No	

---IDC Verification---

Is IDC correct? Yes **Recommended IDC** -

IDC Change Reason

Batch Id VEB14-00254 **Container Id** 10527600 **Analysis Id** 0000321407

Visual Exam Comment Remaining waste by weight percent is Iron Based Metal / Alloy consisting of scrap metal.

---Source Container---

Is there a source container? Yes

Source Container ID	Location	IDC
10526886	destroyed @ 676- BXI/9	BN-519

---IDC CODES---

Current Container IDC Code: BN-508 **Recommended IDC Code:** -

--- Waste Material Items---

---Packaging Materials---

Material Item	Quantity	Unit	Unit Wt	Item Wt(lbs)

---Waste Items by Weight---

Material Item	Quantity	Unit	Unit Wt	Item Wt(lbs)

---Waste Items by Volume---

Material Item	Quantity	Unit	Unit Wt	Item Wt(lbs)
Oil-Dri (Inside 55 gal drum)	4.000	PINTS	0.420	1.680
Plastic	8.000	PINTS	0.937	7.500

---Waste Parameters---

Waste Parameter	Remaining Weight %	Actual Weight Lbs
Iron-based Metals/Alloys	100.000	101.530
Aluminum-based Metals/Alloys	0.000	0.000
Other metals	0.000	0.000
Other Inorganic Materials	0.000	1.680
Cellulosics	0.000	0.000
Rubber	0.000	0.000
Plastic (Waste Materials)	0.000	7.500
Inorganic matrix	0.000	0.000
Organic matrix	0.000	0.000
Soils/gravel	0.000	0.000
Steel (packaging materials)	0.000	26.000
Plastic (packaging materials)	0.000	0.000
Cellulosics Packaging	0.000	0.000
MLLW Waste	0.000	0.000

---Esignature History---

Esig Approval Id	User Id	E-signature Date	Comment
2819237	MBECK1	25-AUG-14 05:26:01	
2819238	KDOWNS	25-AUG-14 05:26:03	

Batch Id VEB14-00254 **Container Id** 10527955 **Analysis Id** 0000321408

VE Date 25-AUG-14 07:56:30 **Analysis Status** Pass

Gen-IDC Code BN-508 AMWTP Newly Generated Debris

VE Weight 114.66 lbs

Closure Date 25-AUG-14 07:56:30 **Procedure Id** INST-FOI-17 **Net Weight** 88.66 lbs

Container Type 55 **Revision** 27

Operator 1 GUY MATLOCK **Waste Matrix** S5490 **Summary Category Group** S5000

Operator 2 ANTHONY CAIN **Equipment ID** VE BiD RPCK

---General---

Rigid Liner Present? No **Liner Type** NO LINER **Closure Method** No Bags

Liner Punctured? Yes **Layers Of Confinement** 0 **Fill Factor** 65 % **Liner Lid Present** No

---Liquids---

Liquids Present? No **Comment**

Liquid Between Liner and Drum 0 pints

Containerized Liquid pints

Internal Container with Liquid 0 pints

Other Liquids 0 pints

Total Liquid Amount 0 pints

Internal Container with Liquid No

Prohibited Liquids Present No

Containerized Liquid

---Contents---

Sharp Objects? Yes **Are Sharp Objects Protected?** No

	Value	*Comment*
Prohibited Compressed Gas Present?	No	
Explosives Present?	No	
Pyrophorics Present?	No	
Mercury Present?	No	
PCBs Present?	No	
PCB Mass (lbs)	0	
Wet Cell Batteries Present?	No	
Corrosives,Ignitables or Reactives Present?	No	
Beryllium Contaminates Present?	No	
Hazardous-Only Waste Present?	No	
Is Waste Incompatible with backfill, packaging materials, or shipping container materials?	No	
Sealed Containers Over 4L?	No	

---IDC Verification---

Is IDC correct? Yes **Recommended IDC** -

IDC Change Reason

Batch Id VEB14-00254 **Container Id** 10527955 **Analysis Id** 0000321408

Visual Exam Comment The remaining waste by weight percent is Iron Based Metals/Alloys consisting of scrap metal

---Source Container---

Is there a source container? Yes

Source Container ID	Location	IDC
10526884	destroyed @ 676- BXI/9	BN-519

---IDC CODES---

Current Container IDC Code: BN-508 **Recommended IDC Code:** -

---Waste Material Items---

---Packaging Materials---

Material Item	Quantity	Unit	Unit Wt	Item Wt(lbs)

---Waste Items by Weight---

Material Item	Quantity	Unit	Unit Wt	Item Wt(lbs)

---Waste Items by Volume---

Material Item	Quantity	Unit	Unit Wt	Item Wt(lbs)
Oil-Dri (Inside 55 gal drum)	7.000	PINTS	0.420	2.940
Wood	10.000	PINTS	0.702	7.020
Plastic	3.000	PINTS	0.937	2.810

---Waste Parameters---

Waste Parameter	Remaining Weight %	Actual Weight Lbs
Iron-based Metals/Alloys	100.000	75.890
Aluminum-based Metals/Alloys	0.000	0.000
Other metals	0.000	0.000
Other Inorganic Materials	0.000	2.940
Cellulosics	0.000	7.020
Rubber	0.000	0.000
Plastic (Waste Materials)	0.000	2.810
Inorganic matrix	0.000	0.000
Organic matrix	0.000	0.000
Soils/gravel	0.000	0.000
Steel (packaging materials)	0.000	26.000
Plastic (packaging materials)	0.000	0.000
Cellulosics Packaging	0.000	0.000
MLLW Waste	0.000	0.000

---Esignature History---

Esig Approval Id	User Id	E-signature Date	Comment
2819347	GMATLOCK	25-AUG-14 07:56:31	
2819348	TCAIN	25-AUG-14 07:56:35	

Batch Id VEB14-00254 **Container Id** 10527919 **Analysis Id** 0000321409

VE Date 25-AUG-14 09:02:03 **Analysis Status** Pass

Gen-IDC Code BN-508 AMWTP Newly Generated Debris **VE Weight** 141.12 lbs

Closure Date 25-AUG-14 09:02:03 **Procedure Id** INST-FOI-17 **Net Weight** 115.12 lbs

Container Type 55 **Revision** 27

Operator 1 GUY MATLOCK **Waste Matrix** S5490 **Summary Category Group** S5000

Operator 2 ANTHONY CAIN **Equipment ID** VE BiD RPCK

---General---

Rigid Liner Present? No **Liner Type** NO LINER **Closure Method** No Bags

Liner Punctured? Yes **Layers Of Confinement** 0 **Fill Factor** 65 % **Liner Lid Present** No

---Liquids---

Liquids Present? No **Comment**

Liquid Between Liner and Drum 0 pints **Other Liquids** 0 pints

Containerized Liquid pints **Total Liquid Amount** 0 pints

Internal Container with Liquid 0 pints

Internal Container with Liquid No

Prohibited Liquids Present No

Containerized Liquid

---Contents---

Sharp Objects? Yes **Are Sharp Objects Protected?** No

	Value	*Comment*
Prohibited Compressed Gas Present?	No	
Explosives Present?	No	
Pyrophorics Present?	No	
Mercury Present?	No	
PCBs Present?	No	
PCB Mass (lbs)	0	
Wet Cell Batteries Present?	No	
Corrosives,Ignitables or Reactives Present?	No	
Beryllium Contaminates Present?	No	
Hazardous-Only Waste Present?	No	
Is Waste Incompatible with backfill, packaging materials, or shipping container materials?	No	
Sealed Containers Over 4L?	No	

---IDC Verification---

Is IDC correct? Yes **Recommended IDC** -

IDC Change Reason

Batch Id VEB14-00254 **Container Id** 10527919 **Analysis Id** 0000321409

Visual Exam Comment The remaining waste by weight percent is Iron Based Metals/Alloys consisting of scrap metal

---Source Container---

Is there a source container? Yes

Source Container ID	Location	IDC
10526884	destroyed @ 676- BXI/9	BN-519

---IDC CODES---

Current Container IDC Code: BN-508 **Recommended IDC Code:** -

--- Waste Material Items---

---Packaging Materials---

Material Item	Quantity	Unit	Unit Wt	Item Wt(lbs)

---Waste Items by Weight---

Material Item	Quantity	Unit	Unit Wt	Item Wt(lbs)

---Waste Items by Volume---

Material Item	Quantity	Unit	Unit Wt	Item Wt(lbs)
Plastic	15.000	PINTS	0.937	14.060
Debris Sweepings	8.000	PINTS	1.000	8.000

---Waste Parameters---

Waste Parameter	Remaining Weight %	Actual Weight Lbs
Iron-based Metals/Alloys	100.000	93.060
Aluminum-based Metals/Alloys	0.000	0.000
Other metals	0.000	0.000
Other Inorganic Materials	0.000	8.000
Cellulosics	0.000	0.000
Rubber	0.000	0.000
Plastic (Waste Materials)	0.000	14.060
Inorganic matrix	0.000	0.000
Organic matrix	0.000	0.000
Soils/gravel	0.000	0.000
Steel (packaging materials)	0.000	26.000
Plastic (packaging materials)	0.000	0.000
Cellulosics Packaging	0.000	0.000
MLLW Waste	0.000	0.000

---Esignature History---

Esig Approval Id	User Id	E-signature Date	Comment
2819370	GMATLOCK	25-AUG-14 09:02:03	
2819371	TCAIN	25-AUG-14 09:02:05	

Batch Id VEB14-00254 **Container Id** 10527940 **Analysis Id** 0000321410

VE Date 25-AUG-14 09:45:36 **Analysis Status** Pass

Gen-IDC Code BN-508 AMWTP Newly Generated Debris **VE Weight** 136.71 lbs

Closure Date 25-AUG-14 09:45:36 **Procedure Id** INST-FOI-17 **Net Weight** 110.71 lbs

Container Type 55 **Revision** 27

Operator 1 GUY MATLOCK **Waste Matrix** S5490 **Summary Category Group** S5000

Operator 2 ANTHONY CAIN **Equipment ID** VE BiD RPCK

General

Rigid Liner Present? No **Liner Type** NO LINER **Closure Method** No Bags

Liner Punctured? Yes **Layers Of Confinement** 0 **Fill Factor** 70 % **Liner Lid Present** No

Liquids

Liquids Present? No **Comment**

Liquid Between Liner and Drum 0 pints **Other Liquids** 0 pints

Containerized Liquid pints **Total Liquid Amount** 0 pints

Internal Container with Liquid 0 pints

Internal Container with Liquid No

Prohibited Liquids Present No

Containerized Liquid

Contents

Sharp Objects? Yes **Are Sharp Objects Protected?** No

	Value	*Comment*
Prohibited Compressed Gas Present?	No	
Explosives Present?	No	
Pyrophorics Present?	No	
Mercury Present?	No	
PCBs Present?	No	
PCB Mass (lbs)	0	
Wet Cell Batteries Present?	No	
Corrosives,Ignitables or Reactives Present?	No	
Beryllium Contaminates Present?	No	
Hazardous-Only Waste Present?	No	
Is Waste Incompatible with backfill, packaging materials, or shipping container materials?	No	
Sealed Containers Over 4L?	No	

IDC Verification

Is IDC correct? Yes **Recommended IDC** -

IDC Change Reason

Batch Id VEB14-00254 **Container Id** 10527940 **Analysis Id** 0000321410

Visual Exam Comment The remaining waste by weight percent is Iron Based Metals/Alloys consisting of scrap metal

---Source Container---

Is there a source container? Yes

Source Container ID	Location	IDC
10526884	destroyed @ 676- BXI/9	BN-519

---IDC CODES---

Current Container IDC Code: BN-508 **Recommended IDC Code:** -

--- Waste Material Items---

---Packaging Materials---

Material Item	Quantity	Unit	Unit Wt	Item Wt(lbs)

---Waste Items by Weight---

Material Item	Quantity	Unit	Unit Wt	Item Wt(lbs)

---Waste Items by Volume---

Material Item	Quantity	Unit	Unit Wt	Item Wt(lbs)
Rubber	3.000	PINTS	1.554	4.660
Plastic	12.000	PINTS	0.937	11.240
Debris Sweepings	10.000	PINTS	1.000	10.000

---Waste Parameters---

Waste Parameter	Remaining Weight %	Actual Weight Lbs
Iron-based Metals/Alloys	100.000	84.810
Aluminum-based Metals/Alloys	0.000	0.000
Other metals	0.000	0.000
Other Inorganic Materials	0.000	10.000
Cellulosics	0.000	0.000
Rubber	0.000	4.660
Plastic (Waste Materials)	0.000	11.240
Inorganic matrix	0.000	0.000
Organic matrix	0.000	0.000
Soils/gravel	0.000	0.000
Steel (packaging materials)	0.000	26.000
Plastic (packaging materials)	0.000	0.000
Cellulosics Packaging	0.000	0.000
MLLW Waste	0.000	0.000

---Esignature History---

Esig Approval Id	User Id	E-signature Date	Comment
2819379	GMATLOCK	25-AUG-14 09:45:36	
2819380	TCAIN	25-AUG-14 09:45:40	

Batch Id VEB14-00254 **Container Id** 10527923 **Analysis Id** 0000321411

VE Date 25-AUG-14 10:16:57 **Analysis Status** Pass

Gen-IDC Code BN-508 AMWTP Newly Generated Debris **VE Weight** 194.04 lbs

Closure Date 25-AUG-14 10:16:57 **Procedure Id** INST-FOI-17 **Net Weight** 168.04 lbs

Container Type 55 **Revision** 27

Operator 1 GUY MATLOCK **Waste Matrix** S5490 **Summary Category Group** S5000

Operator 2 ANTHONY CAIN **Equipment ID** VE BiD RPCK

---General---

Rigid Liner Present? No **Liner Type** NO LINER **Closure Method** No Bags

Liner Punctured? Yes **Layers Of Confinement** 0 **Fill Factor** 65 % **Liner Lid Present** No

---Liquids---

Liquids Present? No **Comment**

Liquid Between Liner and Drum 0 pints **Other Liquids** 0 pints

Containerized Liquid pints **Total Liquid Amount** 0 pints

Internal Container with Liquid 0 pints

Internal Container with Liquid No

Prohibited Liquids Present No

Containerized Liquid

---Contents---

Sharp Objects? Yes **Are Sharp Objects Protected?** No

	Value	*Comment*
Prohibited Compressed Gas Present?	No	
Explosives Present?	No	
Pyrophorics Present?	No	
Mercury Present?	No	
PCBs Present?	No	
PCB Mass (lbs)	0	
Wet Cell Batteries Present?	No	
Corrosives,Ignitables or Reactives Present?	No	
Beryllium Contaminates Present?	No	
Hazardous-Only Waste Present?	No	
Is Waste Incompatible with backfill, packaging materials, or shipping container materials?	No	
Sealed Containers Over 4L?	No	

---IDC Verification---

Is IDC correct? Yes **Recommended IDC** -

IDC Change Reason

Batch Id VEB14-00254 **Container Id** 10527923 **Analysis Id** 0000321411

Visual Exam Comment The remaining waste by weight percent is Iron Based Metals/Alloys consisting of scrap metal

---Source Container---

Is there a source container? Yes

Source Container ID	Location	IDC
10526884	destroyed @ 676- BXI/9	BN-519

---IDC CODES---

Current Container IDC Code: BN-508 **Recommended IDC Code:** -

---Waste Material Items---

---Packaging Materials---

Material Item	Quantity	Unit	Unit Wt	Item Wt(lbs)

---Waste Items by Weight---

Material Item	Quantity	Unit	Unit Wt	Item Wt(lbs)

---Waste Items by Volume---

Material Item	Quantity	Unit	Unit Wt	Item Wt(lbs)
Paper	15.000	PINTS	0.969	14.540
Rubber	3.000	PINTS	1.554	4.660
Plastic	8.000	PINTS	0.937	7.500
Debris Sweepings	12.000	PINTS	1.000	12.000

---Waste Parameters---

Waste Parameter	Remaining Weight %	Actual Weight Lbs
Iron-based Metals/Alloys	100.000	129.340
Aluminum-based Metals/Alloys	0.000	0.000
Other metals	0.000	0.000
Other Inorganic Materials	0.000	12.000
Cellulosics	0.000	14.540
Rubber	0.000	4.660
Plastic (Waste Materials)	0.000	7.500
Inorganic matrix	0.000	0.000
Organic matrix	0.000	0.000
Soils/gravel	0.000	0.000
Steel (packaging materials)	0.000	26.000
Plastic (packaging materials)	0.000	0.000
Cellulosics Packaging	0.000	0.000
MLLW Waste	0.000	0.000

---Esignature History---

Esig Approval Id	User Id	E-signature Date	Comment
2819387	GMATLOCK	25-AUG-14 10:16:57	
2819388	TCAIN	25-AUG-14 10:16:59	

Batch Id VEB14-00254 **Container Id** 10527935 **Analysis Id** 0000321414

VE Date 25-AUG-14 10:41:57 **Analysis Status** Pass

Gen-IDC Code BN-508 AMWTP Newly Generated Debris

VE Weight 130.10 lbs

Closure Date 25-AUG-14 10:41:57 **Procedure Id** INST-FOI-17 **Net Weight** 104.10 lbs

Container Type 55 **Revision** 27

Operator 1 GUY MATLOCK **Waste Matrix** S5490 **Summary Category Group** S5000

Operator 2 ANTHONY CAIN **Equipment ID** VE BiD RPCK

General

Rigid Liner Present? No **Liner Type** NO LINER **Closure Method** No Bags

Liner Punctured? Yes **Layers Of Confinement** 0 **Fill Factor** 60 % **Liner Lid Present** No

Liquids

Liquids Present? No **Comment**

Liquid Between Liner and Drum 0 pints

Containerized Liquid pints

Internal Container with Liquid 0 pints

Other Liquids 0 pints

Total Liquid Amount 0 pints

Internal Container with Liquid No

Prohibited Liquids Present No

Containerized Liquid

Contents

Sharp Objects? Yes **Are Sharp Objects Protected?** No

	Value	*Comment*
Prohibited Compressed Gas Present?	No	
Explosives Present?	No	
Pyrophorics Present?	No	
Mercury Present?	No	
PCBs Present?	No	
PCB Mass (lbs)	0	
Wet Cell Batteries Present?	No	
Corrosives,Ignitables or Reactives Present?	No	
Beryllium Contaminates Present?	No	
Hazardous-Only Waste Present?	No	
Is Waste Incompatible with backfill, packaging materials, or shipping container materials?	No	
Sealed Containers Over 4L?	No	

IDC Verification

Is IDC correct? Yes **Recommended IDC** -

IDC Change Reason

Batch Id VEB14-00254 **Container Id** 10527935 **Analysis Id** 0000321414

Visual Exam Comment The remaining waste by weight percent is Iron Based Metals/Alloys consisting of scrap metal

---Source Container---

Is there a source container? Yes

Source Container ID	Location	IDC
10526884	destroyed @ 676- BXJ/9	BN-519

---IDC CODES---

Current Container IDC Code: BN-508 **Recommended IDC Code:** -

--- Waste Material Items---

---Packaging Materials---

Material Item	Quantity	Unit	Unit Wt	Item Wt(lbs)

---Waste Items by Weight---

Material Item	Quantity	Unit	Unit Wt	Item Wt(lbs)

---Waste Items by Volume---

Material Item	Quantity	Unit	Unit Wt	Item Wt(lbs)
Paper	4.000	PINTS	0.969	3.880
Wood	10.000	PINTS	0.702	7.020
Plastic	10.000	PINTS	0.937	9.370
Debris Sweepings	4.000	PINTS	1.000	4.000

---Waste Parameters---

Waste Parameter	Remaining Weight %	Actual Weight Lbs
Iron-based Metals/Alloys	100.000	79.825
Aluminum-based Metals/Alloys	0.000	0.000
Other metals	0.000	0.000
Other Inorganic Materials	0.000	4.000
Cellulosics	0.000	10.900
Rubber	0.000	0.000
Plastic (Waste Materials)	0.000	9.370
Inorganic matrix	0.000	0.000
Organic matrix	0.000	0.000
Soils/gravel	0.000	0.000
Steel (packaging materials)	0.000	26.000
Plastic (packaging materials)	0.000	0.000
Cellulosics Packaging	0.000	0.000
MLLW Waste	0.000	0.000

---Esignature History---

Esig Approval Id	User Id	E-signature Date	Comment
2819396	GMATLOCK	25-AUG-14 10:41:57	
2819397	TCAIN	25-AUG-14 10:42:00	

Batch Id VEB14-00254 **Container Id** 10527926 **Analysis Id** 0000321418

VE Date 25-AUG-14 11:03:31 **Analysis Status** Pass

Gen-IDC Code BN-508 AMWTP Newly Generated Debris

VE Weight 86.00 lbs

Closure Date 25-AUG-14 11:03:31 **Procedure Id** INST-FOI-17 **Net Weight** 60.00 lbs

Container Type 55 **Revision** 27

Operator 1 ROBERT PURCELL **Waste Matrix** S5490 **Summary Category Group** S5000

Operator 2 REX BUSH **Equipment ID** VE BiD RPCK

---General---

Rigid Liner Present? No **Liner Type** NO LINER **Closure Method** No Bags

Liner Punctured? Yes **Layers Of Confinement** 0 **Fill Factor** 55 % **Liner Lid Present** No

---Liquids---

Liquids Present? No **Comment**

Liquid Between Liner and Drum 0 pints **Other Liquids** 0 pints

Containerized Liquid pints **Total Liquid Amount** 0 pints

Internal Container with Liquid 0 pints

Internal Container with Liquid No

Prohibited Liquids Present No

Containerized Liquid

---Contents---

Sharp Objects? Yes **Are Sharp Objects Protected?** No

	Value	*Comment*
Prohibited Compressed Gas Present?	No	
Explosives Present?	No	
Pyrophorics Present?	No	
Mercury Present?	No	
PCBs Present?	No	
PCB Mass (lbs)	0	
Wet Cell Batteries Present?	No	
Corrosives,Ignitables or Reactives Present?	No	
Beryllium Contaminates Present?	No	
Hazardous-Only Waste Present?	No	
Is Waste Incompatible with backfill, packaging materials, or shipping container materials?	No	
Sealed Containers Over 4L?	No	

---IDC Verification---

Is IDC correct? Yes **Recommended IDC** -

IDC Change Reason

Batch Id VEB14-00254 **Container Id** 10527926 **Analysis Id** 0000321418

Visual Exam Comment The remaining waste by weight percent is Iron Based Metals/Alloys consisting of scrap metal

---Source Container---

Is there a source container? Yes

Source Container ID	Location	IDC
10526884	destroyed @ 676- BXI/9	BN-519

---IDC CODES---

Current Container IDC Code: BN-508 **Recommended IDC Code:** -

--- Waste Material Items---

---Packaging Materials---

Material Item	Quantity	Unit	Unit Wt	Item Wt(lbs)

---Waste Items by Weight---

Material Item	Quantity	Unit	Unit Wt	Item Wt(lbs)

---Waste Items by Volume---

Material Item	Quantity	Unit	Unit Wt	Item Wt(lbs)
Plastic	2.000	PINTS	0.937	1.870

---Waste Parameters---

Waste Parameter	Remaining Weight %	Actual Weight Lbs
Iron-based Metals/Alloys	100.000	58.125
Aluminum-based Metals/Alloys	0.000	0.000
Other metals	0.000	0.000
Other Inorganic Materials	0.000	0.000
Cellulosics	0.000	0.000
Rubber	0.000	0.000
Plastic (Waste Materials)	0.000	1.870
Inorganic matrix	0.000	0.000
Organic matrix	0.000	0.000
Soils/gravel	0.000	0.000
Steel (packaging materials)	0.000	26.000
Plastic (packaging materials)	0.000	0.000
Cellulosics Packaging	0.000	0.000
MLLW Waste	0.000	0.000

---Esignature History---

Esig Approval Id	User Id	E-signature Date	Comment
2819414	RPURCELL	25-AUG-14 11:03:32	
2819416	RBUSH1	25-AUG-14 11:03:33	

Batch Id VEB14-00254 **Container Id** 10527785 **Analysis Id** 0000321419

VE Date 25-AUG-14 11:28:52 **Analysis Status** Pass

Gen-IDC Code BN-508 AMWTP Newly Generated Debris

Closure Date 25-AUG-14 11:28:52

Container Type 55

Operator 1 ROBERT PURCELL

Operator 2 REX BUSH

Procedure Id INST-FOI-17

Revision 27

Waste Matrix S5490

Equipment ID VE BiD RPCK

VE Weight 94.82 lbs

Net Weight 68.82 lbs

Summary Category Group S5000

General

Rigid Liner Present? No **Liner Type** NO LINER **Closure Method** No Bags

Liner Punctured? Yes **Layers Of Confinement** 0 **Fill Factor** 60 % **Liner Lid Present** No

Liquids

Liquids Present? No **Comment**

Liquid Between Liner and Drum 0 pints

Containerized Liquid pints

Internal Container with Liquid 0 pints

Other Liquids 0 pints

Total Liquid Amount 0 pints

Internal Container with Liquid No

Prohibited Liquids Present No

Containerized Liquid

Contents

Sharp Objects? Yes **Are Sharp Objects Protected?** No

	Value	*Comment*
Prohibited Compressed Gas Present?	No	
Explosives Present?	No	
Pyrophorics Present?	No	
Mercury Present?	No	
PCBs Present?	No	
PCB Mass (lbs)	0	
Wet Cell Batteries Present?	No	
Corrosives,Ignitables or Reactives Present?	No	
Beryllium Contaminates Present?	No	
Hazardous-Only Waste Present?	No	
Is Waste Incompatible with backfill, packaging materials, or shipping container materials?	No	
Sealed Containers Over 4L?	No	

IDC Verification

Is IDC correct? Yes **Recommended IDC** -

IDC Change Reason

Batch Id VEB14-00254 **Container Id** 10527785 **Analysis Id** 0000321419

Visual Exam Comment The remaining waste by weight percent is Iron Based Metals/Alloys consisting of scrap metal.

---Source Container---

Is there a source container? Yes

Source Container ID	Location	IDC
10526884	destroyed @ 676- BXI/9	BN-519

---IDC CODES---

Current Container IDC Code: BN-508 **Recommended IDC Code:** -

--- Waste Material Items---

---Packaging Materials---

Material Item	Quantity	Unit	Unit Wt	Item Wt(lbs)

---Waste Items by Weight---

Material Item	Quantity	Unit	Unit Wt	Item Wt(lbs)

---Waste Items by Volume---

Material Item	Quantity	Unit	Unit Wt	Item Wt(lbs)
Wood	2.000	PINTS	0.702	1.400
Plastic	3.000	PINTS	0.937	2.810

---Waste Parameters---

Waste Parameter	Remaining Weight %	Actual Weight Lbs
Iron-based Metals/Alloys	100.000	64.605
Aluminum-based Metals/Alloys	0.000	0.000
Other metals	0.000	0.000
Other Inorganic Materials	0.000	0.000
Cellulosics	0.000	1.400
Rubber	0.000	0.000
Plastic (Waste Materials)	0.000	2.810
Inorganic matrix	0.000	0.000
Organic matrix	0.000	0.000
Soils/gravel	0.000	0.000
Steel (packaging materials)	0.000	26.000
Plastic (packaging materials)	0.000	0.000
Cellulosics Packaging	0.000	0.000
MLLW Waste	0.000	0.000

---Esignature History---

Esig Approval Id	User Id	E-signature Date	Comment
2819455	RPURCELL	25-AUG-14 11:28:52	
2819456	RBUSH1	25-AUG-14 11:28:55	

Batch Id VEB14-00254 **Container Id** 10527922 **Analysis Id** 0000321420

VE Date 25-AUG-14 12:40:33 **Analysis Status** Pass

Gen-IDC Code BN-508 AMWTP Newly Generated Debris

VE Weight 123.48 lbs

Closure Date 25-AUG-14 12:40:33 **Procedure Id** INST-FOI-17 **Net Weight** 97.48 lbs

Container Type 55 **Revision** 27

Operator 1 ROBERT PURCELL **Waste Matrix** S5490 **Summary Category Group** S5000

Operator 2 REX BUSH **Equipment ID** VE BiD RPCK

---General---

Rigid Liner Present? No **Liner Type** NO LINER **Closure Method** No Bags

Liner Punctured? Yes **Layers Of Confinement** 0 **Fill Factor** 68 % **Liner Lid Present** No

---Liquids---

Liquids Present? No **Comment**

Liquid Between Liner and Drum 0 pints

Containerized Liquid pints

Internal Container with Liquid 0 pints

Other Liquids 0 pints

Total Liquid Amount 0 pints

Internal Container with Liquid No

Prohibited Liquids Present No

Containerized Liquid

---Contents---

Sharp Objects? Yes **Are Sharp Objects Protected?** No

	Value	*Comment*
Prohibited Compressed Gas Present?	No	
Explosives Present?	No	
Pyrophorics Present?	No	
Mercury Present?	No	
PCBs Present?	No	
PCB Mass (lbs)	0	
Wet Cell Batteries Present?	No	
Corrosives,Ignitables or Reactives Present?	No	
Beryllium Contaminates Present?	No	
Hazardous-Only Waste Present?	No	
Is Waste Incompatible with backfill, packaging materials, or shipping container materials?	No	
Sealed Containers Over 4L?	No	

---IDC Verification---

Is IDC correct? Yes **Recommended IDC** -

IDC Change Reason

Batch Id VEB14-00254 **Container Id** 10527922 **Analysis Id** 0000321420

Visual Exam Comment The remaining waste by weight percent is Iron Based Metals/Alloys consisting of scrap metal.

---Source Container---

Is there a source container? Yes

Source Container ID	Location	IDC
10526884	destroyed @ 676- BXI/9	BN-519

---IDC CODES---

Current Container IDC Code: BN-508 **Recommended IDC Code:** -

--- Waste Material Items---

---Packaging Materials---

Material Item	Quantity	Unit	Unit Wt	Item Wt(lbs)

---Waste Items by Weight---

Material Item	Quantity	Unit	Unit Wt	Item Wt(lbs)

---Waste Items by Volume---

Material Item	Quantity	Unit	Unit Wt	Item Wt(lbs)
Wood	4.000	PINTS	0.702	2.810
Plastic	2.000	PINTS	0.937	1.870

---Waste Parameters---

Waste Parameter	Remaining Weight %	Actual Weight Lbs
Iron-based Metals/Alloys	100.000	92.800
Aluminum-based Metals/Alloys	0.000	0.000
Other metals	0.000	0.000
Other Inorganic Materials	0.000	0.000
Cellulosics	0.000	2.810
Rubber	0.000	0.000
Plastic (Waste Materials)	0.000	1.870
Inorganic matrix	0.000	0.000
Organic matrix	0.000	0.000
Soils/gravel	0.000	0.000
Steel (packaging materials)	0.000	26.000
Plastic (packaging materials)	0.000	0.000
Cellulosics Packaging	0.000	0.000
MLLW Waste	0.000	0.000

---Esignature History---

Esig Approval Id	User Id	E-signature Date	Comment
2819495	RPURCELL	25-AUG-14 12:40:33	
2819496	RBUSH1	25-AUG-14 12:40:36	

Batch Id VEB14-00254 **Container Id** 10527933 **Analysis Id** 0000321421

VE Date 25-AUG-14 13:03:00 **Analysis Status** Pass

Gen-IDC Code BN-508 AMWTP Newly Generated Debris

VE Weight 123.48 lbs

Closure Date 25-AUG-14 13:03:00 **Procedure Id** INST-FOI-17 **Net Weight** 97.48 lbs

Container Type 55 **Revision** 27

Operator 1 ROBERT PURCELL **Waste Matrix** S5490 **Summary Category Group** S5000

Operator 2 REX BUSH **Equipment ID** VE BiD RPCK

---General---

Rigid Liner Present? No **Liner Type** NO LINER **Closure Method** No Bags

Liner Punctured? Yes **Layers Of Confinement** 0 **Fill Factor** 60 % **Liner Lid Present** No

---Liquids---

Liquids Present? No **Comment**

Liquid Between Liner and Drum 0 pints

Containerized Liquid pints

Internal Container with Liquid 0 pints

Other Liquids 0 pints

Total Liquid Amount 0 pints

Internal Container with Liquid No

Prohibited Liquids Present No

Containerized Liquid

---Contents---

Sharp Objects? Yes **Are Sharp Objects Protected?** No

	Value	*Comment*
Prohibited Compressed Gas Present?	No	
Explosives Present?	No	
Pyrophorics Present?	No	
Mercury Present?	No	
PCBs Present?	No	
PCB Mass (lbs)	0	
Wet Cell Batteries Present?	No	
Corrosives,Ignitables or Reactives Present?	No	
Beryllium Contaminates Present?	No	
Hazardous-Only Waste Present?	No	
Is Waste Incompatible with backfill, packaging materials, or shipping container materials?	No	
Sealed Containers Over 4L?	No	

---IDC Verification---

Is IDC correct? Yes **Recommended IDC** -

IDC Change Reason

Batch Id VEB14-00254 **Container Id** 10527933 **Analysis Id** 0000321421

Visual Exam Comment The remaining waste by weight percent is Iron Based Metals/Alloys consisting of scrap metal.

---Source Container---

Is there a source container? Yes

Source Container ID	Location	IDC
10526884	destroyed @ 676- BXI/9	BN-519

---IDC CODES---

Current Container IDC Code: BN-508 **Recommended IDC Code:** -

--- Waste Material Items---

---Packaging Materials---

Material Item	Quantity	Unit	Unit Wt	Item Wt(lbs)

---Waste Items by Weight---

Material Item	Quantity	Unit	Unit Wt	Item Wt(lbs)

---Waste Items by Volume---

Material Item	Quantity	Unit	Unit Wt	Item Wt(lbs)
Wood	2.000	PINTS	0.702	1.400
Plastic	1.000	PINTS	0.937	0.940

---Waste Parameters---

Waste Parameter	Remaining Weight %	Actual Weight Lbs
Iron-based Metals/Alloys	100.000	95.140
Aluminum-based Metals/Alloys	0.000	0.000
Other metals	0.000	0.000
Other Inorganic Materials	0.000	0.000
Cellulosics	0.000	1.400
Rubber	0.000	0.000
Plastic (Waste Materials)	0.000	0.940
Inorganic matrix	0.000	0.000
Organic matrix	0.000	0.000
Soils/gravel	0.000	0.000
Steel (packaging materials)	0.000	26.000
Plastic (packaging materials)	0.000	0.000
Cellulosics Packaging	0.000	0.000
MLLW Waste	0.000	0.000

---Esignature History---

Esig Approval Id	User Id	E-signature Date	Comment
2819505	RPURCELL	25-AUG-14 13:03:01	
2819506	RBUSH1	25-AUG-14 13:03:03	

Batch Id VEB14-00254 **Container Id** 10527927 **Analysis Id** 0000321422

VE Date 25-AUG-14 13:24:22 **Analysis Status** Pass

Gen-IDC Code BN-508 AMWTP Newly Generated Debris

Closure Date 25-AUG-14 13:24:22

Container Type 55

Operator 1 ROBERT PURCELL

Operator 2 REX BUSH

Procedure Id INST-FOI-17

Revision 27

Waste Matrix S5490

Equipment ID VE BiD RPCK

VE Weight 99.23 lbs

Net Weight 73.23 lbs

Summary Category Group S5000

General

Rigid Liner Present? No **Liner Type** NO LINER **Closure Method** No Bags

Liner Punctured? Yes **Layers Of Confinement** 0 **Fill Factor** 60 % **Liner Lid Present** No

Liquids

Liquids Present? No **Comment**

Liquid Between Liner and Drum 0 pints

Containerized Liquid pints

Internal Container with Liquid 0 pints

Other Liquids 0 pints

Total Liquid Amount 0 pints

Internal Container with Liquid No

Prohibited Liquids Present No

Containerized Liquid

Contents

Sharp Objects? Yes **Are Sharp Objects Protected?** No

	Value	*Comment*
Prohibited Compressed Gas Present?	No	
Explosives Present?	No	
Pyrophorics Present?	No	
Mercury Present?	No	
PCBs Present?	No	
PCB Mass (lbs)	0	
Wet Cell Batteries Present?	No	
Corrosives,Ignitables or Reactives Present?	No	
Beryllium Contaminates Present?	No	
Hazardous-Only Waste Present?	No	
Is Waste Incompatible with backfill, packaging materials, or shipping container materials?	No	
Sealed Containers Over 4L?	No	

IDC Verification

Is IDC correct? Yes **Recommended IDC** -

IDC Change Reason

Batch Id VEB14-00254 **Container Id** 10527927 **Analysis Id** 0000321422

Visual Exam Comment The remaining waste by weight percent is Iron Based Metals/Alloys consisting of scrap metal.

---Source Container---

Is there a source container? Yes

Source Container ID	Location	IDC
10526884	destroyed @ 676- BXI/9	BN-519

---IDC CODES---

Current Container IDC Code: BN-508 **Recommended IDC Code:** -

--- Waste Material Items---

---Packaging Materials---

Material Item	Quantity	Unit	Unit Wt	Item Wt(lbs)

---Waste Items by Weight---

Material Item	Quantity	Unit	Unit Wt	Item Wt(lbs)

---Waste Items by Volume---

Material Item	Quantity	Unit	Unit Wt	Item Wt(lbs)
Paper	1.000	PINTS	0.969	0.970
Wood	1.000	PINTS	0.702	0.700
Plastic	1.000	PINTS	0.937	0.940

---Waste Parameters---

Waste Parameter	Remaining Weight %	Actual Weight Lbs
Iron-based Metals/Alloys	100.000	70.615
Aluminum-based Metals/Alloys	0.000	0.000
Other metals	0.000	0.000
Other Inorganic Materials	0.000	0.000
Cellulosics	0.000	1.670
Rubber	0.000	0.000
Plastic (Waste Materials)	0.000	0.940
Inorganic matrix	0.000	0.000
Organic matrix	0.000	0.000
Soils/gravel	0.000	0.000
Steel (packaging materials)	0.000	26.000
Plastic (packaging materials)	0.000	0.000
Cellulosics Packaging	0.000	0.000
MLLW Waste	0.000	0.000

---Esignature History---

Esig Approval Id	User Id	E-signature Date	Comment
2819523	RPURCELL	25-AUG-14 13:24:23	
2819524	RBUSH1	25-AUG-14 13:24:25	

Batch Id VEB14-00254 **Container Id** 10527782 **Analysis Id** 0000321427

VE Date 25-AUG-14 14:06:39 **Analysis Status** Pass

Gen-IDC Code BN-508 AMWTP Newly Generated Debris **VE Weight** 132.30 lbs

Closure Date 25-AUG-14 14:06:39 **Procedure Id** INST-FOI-17 **Net Weight** 106.30 lbs

Container Type 55 **Revision** 27

Operator 1 ROBERT PURCELL **Waste Matrix** S5490 **Summary Category Group** S5000

Operator 2 REX BUSH **Equipment ID** VE BiD RPCK

---General---

Rigid Liner Present? No **Liner Type** NO LINER **Closure Method** No Bags

Liner Punctured? Yes **Layers Of Confinement** 0 **Fill Factor** 75 % **Liner Lid Present** No

---Liquids---

Liquids Present? No **Comment**

Liquid Between Liner and Drum 0 pints **Other Liquids** 0 pints

Containerized Liquid pints **Total Liquid Amount** 0 pints

Internal Container with Liquid 0 pints

Internal Container with Liquid No

Prohibited Liquids Present No

Containerized Liquid

---Contents---

Sharp Objects? Yes **Are Sharp Objects Protected?** No

	Value	*Comment*
Prohibited Compressed Gas Present?	No	
Explosives Present?	No	
Pyrophorics Present?	No	
Mercury Present?	No	
PCBs Present?	No	
PCB Mass (lbs)	0	
Wet Cell Batteries Present?	No	
Corrosives,Ignitables or Reactives Present?	No	
Beryllium Contaminates Present?	No	
Hazardous-Only Waste Present?	No	
Is Waste Incompatible with backfill, packaging materials, or shipping container materials?	No	
Sealed Containers Over 4L?	No	

---IDC Verification---

Is IDC correct? Yes **Recommended IDC** -

IDC Change Reason

Batch Id VEB14-00254 **Container Id** 10527782 **Analysis Id** 0000321427

Visual Exam Comment The remaining waste by weight percent is Cellulosics consisting of wood debris and cardboard.

---Source Container---

Is there a source container? Yes

Source Container ID	Location	IDC
10526884	destroyed @ 676- BXI/9	BN-519

---IDC CODES---

Current Container IDC Code: BN-508 **Recommended IDC Code:** -

--- Waste Material Items---

---Packaging Materials---

Material Item	Quantity	Unit	Unit Wt	Item Wt(lbs)

---Waste Items by Weight---

Material Item	Quantity	Unit	Unit Wt	Item Wt(lbs)

---Waste Items by Volume---

Material Item	Quantity	Unit	Unit Wt	Item Wt(lbs)
Oil-Dri (Inside 55 gal drum)	6.000	PINTS	0.420	2.520
Iron	1.000	PINTS	7.807	7.810
Plastic	1.000	PINTS	0.937	0.940

---Waste Parameters---

Waste Parameter	Remaining Weight %	Actual Weight Lbs
Iron-based Metals/Alloys	0.000	7.810
Aluminum-based Metals/Alloys	0.000	0.000
Other metals	0.000	0.000
Other Inorganic Materials	0.000	2.520
Cellulosics	100.000	95.030
Rubber	0.000	0.000
Plastic (Waste Materials)	0.000	0.940
Inorganic matrix	0.000	0.000
Organic matrix	0.000	0.000
Soils/gravel	0.000	0.000
Steel (packaging materials)	0.000	26.000
Plastic (packaging materials)	0.000	0.000
Cellulosics Packaging	0.000	0.000
MLLW Waste	0.000	0.000

---Esignature History---

Esig Approval Id	User Id	E-signature Date	Comment
2819553	RPURCELL	25-AUG-14 14:06:40	
2819554	RBUSH1	25-AUG-14 14:06:42	

Batch Id VEB14-00254 **Container Id** 10527918 **Analysis Id** 0000321429

VE Date 25-AUG-14 14:53:52 **Analysis Status** Pass

Gen-IDC Code BN-508 AMWTP Newly Generated Debris **VE Weight** 105.84 lbs

Closure Date 25-AUG-14 14:53:52 **Procedure Id** INST-FOI-17 **Net Weight** 79.84 lbs

Container Type 55 **Revision** 27

Operator 1 GUY MATLOCK **Waste Matrix** S5490 **Summary Category Group** S5000

Operator 2 REX BUSH **Equipment ID** VE BiD RPCK

---General---

Rigid Liner Present? No **Liner Type** NO LINER **Closure Method** No Bags

Liner Punctured? Yes **Layers Of Confinement** 0 **Fill Factor** 65 % **Liner Lid Present** No

---Liquids---

Liquids Present? No **Comment**

Liquid Between Liner and Drum 0 pints **Other Liquids** 0 pints

Containerized Liquid pints **Total Liquid Amount** 0 pints

Internal Container with Liquid 0 pints

Internal Container with Liquid No

Prohibited Liquids Present No

Containerized Liquid

---Contents---

Sharp Objects? Yes **Are Sharp Objects Protected?** No

	Value	*Comment*
Prohibited Compressed Gas Present?	No	
Explosives Present?	No	
Pyrophorics Present?	No	
Mercury Present?	No	
PCBs Present?	No	
PCB Mass (lbs)	0	
Wet Cell Batteries Present?	No	
Corrosives,Ignitables or Reactives Present?	No	
Beryllium Contaminates Present?	No	
Hazardous-Only Waste Present?	No	
Is Waste Incompatible with backfill, packaging materials, or shipping container materials?	No	
Sealed Containers Over 4L?	No	

---IDC Verification---

Is IDC correct? Yes **Recommended IDC** -

IDC Change Reason

Batch Id VEB14-00254 **Container Id** 10527918 **Analysis Id** 0000321429

Visual Exam Comment The remaining waste by weight percent is Cellulosics consisting of wood debris

---Source Container---

Is there a source container? Yes

Source Container ID	Location	IDC
10526884	destroyed @ 676- BXI/9	BN-519

---IDC CODES---

Current Container IDC Code: BN-508 **Recommended IDC Code:** -

--- Waste Material Items---

---Packaging Materials---

Material Item	Quantity	Unit	Unit Wt	Item Wt(lbs)

---Waste Items by Weight---

Material Item	Quantity	Unit	Unit Wt	Item Wt(lbs)

---Waste Items by Volume---

Material Item	Quantity	Unit	Unit Wt	Item Wt(lbs)
Iron	1.000	PINTS	7.807	7.810
Plastic	1.000	PINTS	0.937	0.940
Debris Sweepings	8.000	PINTS	1.000	8.000

---Waste Parameters---

Waste Parameter	Remaining Weight %	Actual Weight Lbs
Iron-based Metals/Alloys	0.000	7.810
Aluminum-based Metals/Alloys	0.000	0.000
Other metals	0.000	0.000
Other Inorganic Materials	0.000	8.000
Cellulosics	100.000	63.090
Rubber	0.000	0.000
Plastic (Waste Materials)	0.000	0.940
Inorganic matrix	0.000	0.000
Organic matrix	0.000	0.000
Soils/gravel	0.000	0.000
Steel (packaging materials)	0.000	26.000
Plastic (packaging materials)	0.000	0.000
Cellulosics Packaging	0.000	0.000
MLLW Waste	0.000	0.000

---Esignature History---

Esig Approval Id	User Id	E-signature Date	Comment
2819594	GMATLOCK	25-AUG-14 14:53:53	
2819595	RBUSH1	25-AUG-14 14:53:56	

AMWTP
Advanced Mixed Waste Treatment Project

AMWTP

VE Boxline and Repackaging Report

Date: 12-Sep-2014
Time: 14:33

Batch Id VEB14-00254 **Container Id** 10527925 **Analysis Id** 0000321434

VE Date 25-AUG-14 16:13:02 **Analysis Status** Pass
Gen-IDC Code BN-508 AMWTP Newly Generated Debris **VE Weight** 134.51 lbs
Closure Date 25-AUG-14 16:13:02 **Procedure Id** INST-FOI-17 **Net Weight** 108.51 lbs
Container Type 55 **Revision** 27
Operator 1 GUY MATLOCK **Waste Matrix** S5490 **Summary Category Group** S5000
Operator 2 ROBERT PURCELL **Equipment ID** VE BiD RPCK

General

Rigid Liner Present? No **Liner Type** NO LINER **Closure Method** No Bags
Liner Punctured? Yes **Layers Of Confinement** 0 **Fill Factor** 60 % **Liner Lid Present** No

Liquids

Liquids Present? No **Comment**

Liquid Between Liner and Drum 0 pints
Containerized Liquid pints
Internal Container with Liquid 0 pints
Other Liquids 0 pints
Total Liquid Amount 0 pints

Internal Container with Liquid No

Prohibited Liquids Present No

Containerized Liquid

Contents

Sharp Objects? Yes **Are Sharp Objects Protected?** No

	Value	*Comment*
Prohibited Compressed Gas Present?	No	
Explosives Present?	No	
Pyrophorics Present?	No	
Mercury Present?	No	
PCBs Present?	No	
PCB Mass (lbs)	0	
Wet Cell Batteries Present?	No	
Corrosives,Ignitables or Reactives Present?	No	
Beryllium Contaminates Present?	No	
Hazardous-Only Waste Present?	No	
Is Waste Incompatible with backfill, packaging materials, or shipping container materials?	No	
Sealed Containers Over 4L?	No	

IDC Verification

Is IDC correct? Yes **Recommended IDC** -
IDC Change Reason

Batch Id VEB14-00254 **Container Id** 10527925 **Analysis Id** 0000321434

Visual Exam Comment The remaining waste by weight percent is Iron Based Metals/Alloys consisting of scrap metal

---Source Container---

Is there a source container? Yes

Source Container ID	Location	IDC
10526884	destroyed @ 676- BXI/9	BN-519

---IDC CODES---

Current Container IDC Code: BN-508 **Recommended IDC Code:** -

---Waste Material Items---

---Packaging Materials---

Material Item	Quantity	Unit	Unit Wt	Item Wt(lbs)

---Waste Items by Weight---

Material Item	Quantity	Unit	Unit Wt	Item Wt(lbs)

---Waste Items by Volume---

Material Item	Quantity	Unit	Unit Wt	Item Wt(lbs)
Paper	9.000	PINTS	0.969	8.720
Rubber	4.000	PINTS	1.554	6.220
Cardboard	2.000	PINTS	0.833	1.670
Plastic	5.000	PINTS	0.937	4.690
Debris Sweepings	6.000	PINTS	1.000	6.000

---Waste Parameters---

Waste Parameter	Remaining Weight %	Actual Weight Lbs
Iron-based Metals/Alloys	100.000	81.205
Aluminum-based Metals/Alloys	0.000	0.000
Other metals	0.000	0.000
Other Inorganic Materials	0.000	6.000
Cellulosics	0.000	10.390
Rubber	0.000	6.220
Plastic (Waste Materials)	0.000	4.690
Inorganic matrix	0.000	0.000
Organic matrix	0.000	0.000
Soils/gravel	0.000	0.000
Steel (packaging materials)	0.000	26.000
Plastic (packaging materials)	0.000	0.000
Cellulosics Packaging	0.000	0.000
MLLW Waste	0.000	0.000

---Esignature History---

Esig Approval Id	User Id	E-signature Date	Comment
2819681	GMATLOCK	25-AUG-14 16:13:02	
2819682	RPURCELL	25-AUG-14 16:13:04	

AMWTP
Advanced Mixed Waste Treatment Project

AMWTP

VE Boxline and Repackaging Report

Date: 12-Sep-2014
Time: 14:33

Batch Id VEB14-00254 **Container Id** 10527943 **Analysis Id** 0000321440

VE Date 25-AUG-14 16:48:17 **Analysis Status** Pass
Gen-IDC Code BN-508 AMWTP Newly Generated Debris
VE Weight 116.87 lbs
Closure Date 25-AUG-14 16:48:17 **Procedure Id** INST-FOI-17 **Net Weight** 90.87 lbs
Container Type 55 **Revision** 27
Operator 1 GUY MATLOCK **Waste Matrix** S5490 **Summary Category Group** S5000
Operator 2 ROBERT PURCELL **Equipment ID** VE BiD RPCK

General

Rigid Liner Present? No **Liner Type** NO LINER **Closure Method** No Bags
Liner Punctured? Yes **Layers Of Confinement** 0 **Fill Factor** 55 % **Liner Lid Present** No

Liquids

Liquids Present? No **Comment**

Liquid Between Liner and Drum 0 pints
Containerized Liquid pints
Internal Container with Liquid 0 pints
Other Liquids 0 pints
Total Liquid Amount 0 pints

Internal Container with Liquid No

Prohibited Liquids Present No

Containerized Liquid

Contents

Sharp Objects? Yes **Are Sharp Objects Protected?** No

	Value	*Comment*
Prohibited Compressed Gas Present?	No	
Explosives Present?	No	
Pyrophorics Present?	No	
Mercury Present?	No	
PCBs Present?	No	
PCB Mass (lbs)	0	
Wet Cell Batteries Present?	No	
Corrosives,Ignitables or Reactives Present?	No	
Beryllium Contaminates Present?	No	
Hazardous-Only Waste Present?	No	
Is Waste Incompatible with backfill, packaging materials, or shipping container materials?	No	
Sealed Containers Over 4L?	No	

IDC Verification

Is IDC correct? Yes **Recommended IDC** -
IDC Change Reason

Batch Id VEB14-00254 **Container Id** 10527943 **Analysis Id** 0000321440

Visual Exam Comment The remaining waste by weight percent is Rubber/ Cellulosics consisting of rubber gloves, paper and cardboard

---Source Container---

Is there a source container? Yes

Source Container ID	Location	IDC
10526884	destroyed @ 676- BXI/9	BN-519

---IDC CODES---

Current Container IDC Code: BN-508 **Recommended IDC Code:** -

--- Waste Material Items---

---Packaging Materials---

Material Item	Quantity	Unit	Unit Wt	Item Wt(lbs)

---Waste Items by Weight---

Material Item	Quantity	Unit	Unit Wt	Item Wt(lbs)

---Waste Items by Volume---

Material Item	Quantity	Unit	Unit Wt	Item Wt(lbs)
Iron	1.000	PINTS	7.807	7.810
Plastic	7.000	PINTS	0.937	6.560
Debris Sweepings	3.000	PINTS	1.000	3.000

---Waste Parameters---

Waste Parameter	Remaining Weight %	Actual Weight Lbs
Iron-based Metals/Alloys	0.000	7.810
Aluminum-based Metals/Alloys	0.000	0.000
Other metals	0.000	0.000
Other Inorganic Materials	0.000	3.000
Cellulosics	40.000	29.398
Rubber	60.000	44.097
Plastic (Waste Materials)	0.000	6.560
Inorganic matrix	0.000	0.000
Organic matrix	0.000	0.000
Soils/gravel	0.000	0.000
Steel (packaging materials)	0.000	26.000
Plastic (packaging materials)	0.000	0.000
Cellulosics Packaging	0.000	0.000
MLLW Waste	0.000	0.000

---Esignature History---

Esig Approval Id	User Id	E-signature Date	Comment
2819711	GMATLOCK	25-AUG-14 16:48:17	
2819712	RPURCELL	25-AUG-14 16:48:19	

Batch Id VEB14-00254 **Container Id** 10527946 **Analysis Id** 0000321443

VE Date 25-AUG-14 21:55:15 **Analysis Status** Pass

Gen-IDC Code BN-508 AMWTP Newly Generated Debris **VE Weight** 86.00 lbs

Closure Date 25-AUG-14 21:55:15 **Procedure Id** INST-FOI-17 **Net Weight** 60.00 lbs

Container Type 55 **Revision** 27

Operator 1 HOWARD SHELL **Waste Matrix** S5490 **Summary Category Group** S5000

Operator 2 JEFFREY K BAILEY **Equipment ID** VE BiD RPCK

---General---

Rigid Liner Present? No **Liner Type** NO LINER **Closure Method** No Bags

Liner Punctured? Yes **Layers Of Confinement** 0 **Fill Factor** 70 % **Liner Lid Present** No

---Liquids---

Liquids Present? No **Comment**

Liquid Between Liner and Drum 0 pints **Other Liquids** 0 pints

Containerized Liquid pints **Total Liquid Amount** 0 pints

Internal Container with Liquid 0 pints

Internal Container with Liquid No

Prohibited Liquids Present No

Containerized Liquid

---Contents---

Sharp Objects? Yes **Are Sharp Objects Protected?** No

	Value	*Comment*
Prohibited Compressed Gas Present?	No	
Explosives Present?	No	
Pyrophorics Present?	No	
Mercury Present?	No	
PCBs Present?	No	
PCB Mass (lbs)	0	
Wet Cell Batteries Present?	No	
Corrosives,Ignitables or Reactives Present?	No	
Beryllium Contaminates Present?	No	
Hazardous-Only Waste Present?	No	
Is Waste Incompatible with backfill, packaging materials, or shipping container materials?	No	
Sealed Containers Over 4L?	No	

---IDC Verification---

Is IDC correct? Yes **Recommended IDC** -

IDC Change Reason

Batch Id VEB14-00254 **Container Id** 10527946 **Analysis Id** 0000321443

Visual Exam Comment The remaining waste by weight percent is Iron Based Metal Alloy consisting of scrap metal.

---Source Container---

Is there a source container? Yes

Source Container ID	Location	IDC
10526884	destroyed @ 676- BXJ/9	BN-519

---IDC CODES---

Current Container IDC Code: BN-508 **Recommended IDC Code:** -

--- Waste Material Items---

---Packaging Materials---

Material Item	Quantity	Unit	Unit Wt	Item Wt(lbs)

---Waste Items by Weight---

Material Item	Quantity	Unit	Unit Wt	Item Wt(lbs)

---Waste Items by Volume---

Material Item	Quantity	Unit	Unit Wt	Item Wt(lbs)
Rubber	1.000	PINTS	1.554	1.550
Cardboard	1.000	PINTS	0.833	0.830
Plastic	3.000	PINTS	0.937	2.810

---Waste Parameters---

Waste Parameter	Remaining Weight %	Actual Weight Lbs
Iron-based Metals/Alloys	100.000	54.805
Aluminum-based Metals/Alloys	0.000	0.000
Other metals	0.000	0.000
Other Inorganic Materials	0.000	0.000
Cellulosics	0.000	0.830
Rubber	0.000	1.550
Plastic (Waste Materials)	0.000	2.810
Inorganic matrix	0.000	0.000
Organic matrix	0.000	0.000
Soils/gravel	0.000	0.000
Steel (packaging materials)	0.000	26.000
Plastic (packaging materials)	0.000	0.000
Cellulosics Packaging	0.000	0.000
MLLW Waste	0.000	0.000

---Esignature History---

Esig Approval Id	User Id	E-signature Date	Comment
2819757	HSHELL	25-AUG-14 21:55:15	
2819758	JBAILEY	25-AUG-14 21:55:17	

------End of VE Boxline Report------

AMWTP
Advanced Mixed Waste Treatment Project

AMWTP

Checklist Report

Date: 12-Sep-2014
Time: 14:36

Batch Id VEB14-00254 **Open Date** 25-AUG-14 **Close Date** 25-AUG-14

Reviewer RONALD GRISE **Approval Level** Independent Technical Reviewer
Approval Date 26-AUG-14 **Review Iteration** 1

Question Text	Answer	Requirement	Comment
1. Is the QA documentation for the Batch Data Reports complete and includes data reports and QC results? o VE Batch Coversheet o Table of Contents (manual review only) o VE Analysis Reports o Analytical Balance Calibration Check Sheet (Form-1215), if applicable (manual review only) o ITR Checklist (Form-1415, manual review only) o Batch Data Report Supplemental Comment Form (Form-1491, manual review only) o Associated NCRs (referenced in WTS) o Audio/Video Recording References, if applicable	Yes		
2. Are there 20 containers or less in the batch?	Yes		
3. Was each VE Operator qualified at the time of the VE event?	Yes		
4. Was a VE data form completed for each container in the batch?	Yes		
Was the data generated in a technically correct manner using the correct revision of INST-OI-34, Non-facility Visual Examination or INST-FOI-17, Facility Visual Examination Operations, as applicable.	Yes		
6. Was the correct revision of the procedure documented on each analysis report?	Yes		
7. Was the E-signature History review performed?	Yes		
8. Was guidance from VEE documented, as applicable?	N/A		
9. Does every drum reported in the batch have a valid audio/video recording (as applicable)?	N/A		
10. Does the physical form match the waste stream description, waste matrix code and IDC?	Yes		
11. Did the VE event result in an IDC/Waste Matrix Code change? If so, was an NCR initiated?	No		
12. Were the waste material parameters documented correctly?	Yes		
13. Was the presence or absence of prohibited items properly identified? o If prohibited items were identified, were NCRs initiated?	Yes		
14. Has the description of rigid liners and layers of confinement been properly documented?	Yes		
15. Was the drum age criteria (DAC) entered correctly and completely? o Closure Method(s) o Liner Puncture Status o Layers of Confinement o Closure Date o Packaging Configuration o Type and number of filters, as applicable o Liner hole presence and diameter, as applicable	Yes		
16. Have filters been installed or removed from drum as recorded in WTS, as applicable?	N/A		

Batch Id VEB14-00254 **Open Date** 25-AUG-14 **Close Date** 25-AUG-14

Reviewer RONALD GRISE **Approval Level** Independent Technical Reviewer

Approval Date 26-AUG-14 **Review Iteration** 1

Question Text	Answer	Requirement	Comment
17. Hand calculations and unit conversions are correct? o Does the packaging weight plus the net weight equal the gross weight of the drum in the estimated waste material parameters, and for the unit conversions that are entered by volume or weight?	Yes		
18. Were all units and significant figures used correct for all reported volumes/weights?	Yes		
19. Has the data been reviewed for transcription errors as appropriate?	Yes		
20. Were the Visual Examination QAOs met? o Precision o Accuracy o Completeness o Comparability	Yes		
21. Is each data form signed by qualified VE Operators, as applicable per the appropriate procedure being used?	Yes		
22. Was the audio/video check satisfactory, as applicable?	N/A		
23. Was the scale or balance check weight event satisfactory, as applicable?	N/A		
24. Are the QC weight checks within the tolerance of the scale or balance, as applicable?	N/A		
25. Were any NCRs generated for drums containing prohibited items or any nonconforming conditions that failed to meet DQOs or QAOs? o Include the NCRs as appropriate, in the Batch Data Report.	No		
26. Were the rework requirements clearly identified in WTS or on the BDR?	N/A		

Batch Id VEB14-00254 **Open Date** 25-AUG-14 **Close Date** 25-AUG-14

Reviewer REED WALKER **Approval Level** SPM Data Validation

Approval Date 26-AUG-14 **Review Iteration** 1

Question Text	Answer	Requirement	Comment
(1) Has the batch received a Data Generation Level Independent Technical Review?	Yes	MP-TRUW-8.2, C3-10b(1)	
(2) Are the batch data review checklists complete?	Yes	MP-TRUW-8.2, C3-10b(1)	
(3) When identified, were PCBs, mercury, lead, or other hazardous contaminants consistent with the waste stream AK Summary Report(s) and/or AK documentation?	N/A	MP-TRUW-8.2, C4-3	None were identified.
(4) Are any ignitable, corrosive, or reactive wastes identified?	No	MP-TRUW-8.2, C4-3	
(5) Are the packaging configurations identified on the VE consistent with the waste stream AK Summary Report(s) and/or AK documentation?	Yes	MP-TRUW-8.2, C4-3	
(6) Do the drums in this batch contain typical waste items consistent with waste stream AK Summary Report(s) and/or AK documentation?	Yes	MP-TRUW-8.2, C4-3	
(7) Are the Waste Matrix Codes and physical form descriptions consistent with AK?	Yes	MP-TRUW-8.2, C4-3	
(8) Have all AK discrepancies been resolved and have all AK Resolution checklists been approved? Reference all waste stream AK documentation used in review of this data package.	N/A	MP-TRUW-8.2, C4-3	No discrepancies identified.
(9) Does the batch report identify the correct implementing procedure number and revision number used for this testing method?	Yes	MP-TRUW-8.2, C3-4 and Table C3-11	
(10) Have the Waste Matrix Code (WMC) and IDC for all drums in the batch remained the same as originally assigned by the historical designation? NOTE: If not, note the drum number in the comment field and notify the Acceptable Knowledge Expert (AKE) if an NCR does not exist for the WMC and IDC change.	Yes	MP-TRUW-8.2, C-3c and C1-4	
(11) Does the physical form of the waste match the WMC, waste stream description, and identify the absence of prohibited items?	Yes	MP-TRUW-8.2, C-3c and C1-4	
(12) If observable liquids exist in the drum, is an estimate of quantity given?	N/A	MP-TRUW-8.2, C-3c and C1-4	No liquids identified.
(13) Precision: Have all discrepancies been reconciled between the operator and the ITR with regard to identification of WMC, liquids in excess of TSDF-WAC limits, and compressed gases?	Yes	MP-TRUW-8.2 C3-4b	
(14) Accuracy: Have all operators passed a comprehensive examination and demonstrated satisfactory performance in the presence of the VE expert during initial and subsequent qualifications?	Yes	MP-TRUW-8.2 C3-4b	
(15) Completeness: Has a validated VE data form been obtained for 100% of the waste containers subject to VE?	Yes	MP-TRUW-8.2 C3-4b	
(16) Comparability: Has the comparability of VE data from different operators been enhanced by use of standardized VE procedures and operator qualifications?	Yes	MP-TRUW-8.2 C3-4b	
(17) Does the data for all containers within this batch meet the review, validation, and verification requirements?	Yes	MP-TRUW-8.2, C3-10b and Table C3-11	

Batch Id VEB14-00254 **Open Date** 25-AUG-14 **Close Date** 25-AUG-14

Reviewer REED WALKER **Approval Level** SPM Data Validation

Approval Date 26-AUG-14 **Review Iteration** 1

Question Text	Answer	Requirement	Comment
· Are proper units (e.g. Liters or pounds) and significant figure used? · Is the BDR complete (all pages identified in the BDR and numbered according)? - VE Batch Coversheet - Table of Contents (manual review only) - VE Analysis Reports - Analytical Balance Calibration Checklist (if applicable) - ITR Checklist (Form-1415) - Associated NCRs - Audio/Video Recordings (if applicable)			
(18) Do the drum reports contain the (a) Batch Data Report number and date, (b) waste container number (c)WMC, (d) implementing procedure and revision, (e) audio/video recording reference, (f) audio and video QC checks were performed and satisfactory, (g) verification that the physical form matches the waste stream description and WMC, (h) absence of prohibited items, (i) gross container weight, (j) waste material parameter weights, and (k) signature and date of examination (signatures of both operators when applicable)?	Yes	MP-TRUW-8.2, C1-4 and Table C3-11	
(19) Is the description of container contents detailed enough to provide verification of estimated weights for the waste matrix parameters identified?	Yes	MP-TRUW-8.2, C1-4 and Table C3-11	
(20) Is there a valid second weight check for every 10 items?	N/A	MP-TRUW-8.2, C1-4	Not required for this batch.
(21) Verification of two operator signatures when doing VE?	Yes	MP-TRUW-8.2, C-3d(1) and Table C3-11	
(22) Are there 20 or fewer containers in the batch?	Yes	MP-TRUW-8.2, C1-3 and C3-10	
(23) Review all NCRs (open and closed). Can the batch be approved?	Yes	MP-TRUW-8.2, C3-13	No NCRs.
(24) All data associated with this BDR is acceptable for signature release?	Yes	MP-TRUW-8.2, C3-10b and C3-10b(1)	

Batch Id VEB14-00254 **Open Date** 25-AUG-14 **Close Date** 25-AUG-14

Esignature History

Esig Approval ID	User ID	Esig Date	Approval Level	Comments
2822550	RWALKER	26-AUG-14	SPM	SPM validation complete. Promote batch.
2819936	RGRISE	26-AUG-14	ITR	Promote batch to SPM level.

AMWTP
Advanced Mixed Waste Treatment Project

AMWTP

Non-Conformance Report

Date: 12-Sep-2014

Time: 14:37

*****Batch NCR(s)*****

Batch Type	VEB	Batch ID	VEB14-00254		
Trackwise Number		**Status**		**Opened Date**	**Closed Date**

*****Container NCR(s)*****

Container ID *or related Batch ID*	Trackwise Number	Status	Opened Date	Closed Date

*****End of Non-Conformance Report*****

DIVIDER

PAGE

AMWTP
Advanced Mixed Waste Treatment Project

AMWTP

Batch Report Coversheet

Date: 02-Oct-2014

Time: 06:52

Batch Type Visual Exam Newly Generated Waste Closure
Batch Report No. VNC14-00022
Batch Id VNC14-00022
Open Date 09-JUN-14 16:30:12
Close Date 09-JUN-14 16:30:21
Batch Status AP
Test Facility Idaho AMWTP

Container Id	IDC	Analysis Id	Date Examined	QC Type	Analysis Status	Operator
10523495	BN-508	0000319560	09-JUN-14 16:30:12	Original	P	ROSS J GUNNING

INFORMATION ONLY

**********Batch Comments**********

Written By	Date	Comment
RGUNNING	09-JUN-14 16:30:22	Esigned.
MSORENSON	30-SEP-14 09:56:00	This VNC was validated electroically per MP-TRUW-8.8.
MSORENSON	30-SEP-14 09:56:00	NCR 88614 was initiated and SDCR 3130 implemented to update the data on VNP 10523505.
MSORENSON	30-SEP-14 10:10:36	Promote to SPM.
RWALKER	30-SEP-14 15:48:18	The ITR answered question #16 on the ITR checklist as N/A and it should be Yes. Also demoting checklist to ITR to populate the correct revision of the ITR checklist.
RWALKER	30-SEP-14 15:48:18	Demoted batch back to ITR level for rework.
MSORENSON	30-SEP-14 15:54:58	Updated ITR checklist question # 16 to Yes. Promote to SPM.
RWALKER	01-OCT-14 08:40:37	SPM validation complete. Promote batch.

**********Batch E-Signature History**********

Approval ID	User ID	Signature Date	Comment
2773600	RGUNNING	09-JUN-2014 16:30:22	
2849617	MSORENSON	30-SEP-2014 10:10:36	Promote to SPM.
2850388	RWALKER	30-SEP-2014 15:48:18	Demoted batch back to ITR level for rework.
2850394	MSORENSON	30-SEP-2014 15:54:58	Updated ITR checklist question # 16 to Yes. Promote to SPM.
2850863	RWALKER	01-OCT-2014 08:40:37	SPM validation complete. Promote batch.

***** End of Batch Report Coversheet Report *****

AMWTP
Advanced Mixed Waste Treatment Project

AMWTP

VE Newly Generated Waste Closure Report

Date: 02-Oct-2014

Time: 06:53

Batch Id VNC14-00022 **Container Id** 10523495 **Analysis Id** 0000319560

Analysis Status Pass **Testing Facility** Idaho AMWTP

SAA Location 633, SG **VE Date** 09-JUN-2014 16:30 **IDC** BN-508

Equipment Id FAC-VNC

Procedure Id INST-FOI-17 **Revision** 27 **VE Weight in Lbs.** 61.74 **Net Weight in Lbs.** 2.74

Container Type 425

Operator 1 ROSS J GUNNING **Operator 2** JARED LANDON

General

Rigid Liner Present? No **Liner Punctured?** Yes **Liner Type** NO LINER

Layers Of Confinement 2 **Fill Factor (In %)** 50 **Liner Lid Present** No

Liquids

Liquids Present? No **Comment**

Liquid Between Liner and Drum 0 pints **Other Liquids** 0 pints

Containerized Liquid 0 pints **Total Liquid** 0 pints

Internal Container with Liquid 0 pints

Internal Container with Liquid No

Prohibited Liquids Present No

Containerized Liquid No

Contents

Sharp Objects? No **Are Sharp Objects Protected?** Yes

	Value	*Comment*
Prohibited Compressed Gas Present?	No	
Mercury Present?	No	
Beryllium Contaminants Present?	No	
Explosives Present?	No	
PCBs Present?	No	
PCB Mass (lbs)	0	
Pyrophorics Present?	No	
Corrosives,Ignitables or Reactives Present?	No	
Wet Cell Batteries Present?	No	
Hazardous Only Waste Present?	No	
Is Waste Incompatible with backfill, packaging materials, or shipping container materials?	No	
Sealed Containers Over 4L?	No	

AMWTP
Advanced Mixed Waste Treatment Project

AMWTP

VE Newly Generated Waste Closure Report

Date: 02-Oct-2014
Time: 06:53

Batch Id VNC14-00022 **Container Id** 10523495 **Analysis Id** 0000319560

Waste Summary

Package ID	Material Item	Qty	Unit	Unit Wt	Est. Item Wt Lbs
10523495	Container tare weight	1.00	Each	59.00	59.00
10523505		1.00	Each	2.74	2.74
	Estimated Total Weight--->				61.74

Waste Parameters

Waste Parameter	Weight Lbs
Iron-based Metals/Alloys	0.08
Other Inorganic Materials	0.00
Soils/gravel	0.00
Organic matrix	0.00
Plastic (packaging materials)	0.00
MLLW Waste	0.00
Plastic (Waste Materials)	0.74
Inorganic matrix	0.00
Other metals	0.00
Cellulosics	1.92
Rubber	0.00
Aluminum-based Metals/Alloys	0.00
Steel (packaging materials)	59.00
Cellulosics Packaging	0.00
Total Weight--->	61.74

IDC Verification

Is IDC correct? Yes **Recommended IDC**

IDC Change Reason

Closure Method Twisted and Taped **Waste Matrix Code** S5490

Closure Date 09-JUN-14 16:30:12

Pack. Material Tare Wt. lbs 59

Waste Material Items

Packaging Materials

Material Item	Quantity	Unit	Unit Wt	Item Wt(lbs)

Waste Items by Weight

Material Item	Quantity	Unit	Unit Wt	Item Wt(lbs)

Waste Items by Volume

Material Item	Quantity	Unit	Unit Wt	Item Wt(lbs)

Waste Parameters

Waste Parameter	Remaining Weight %	Actual Weight Lbs
Iron-based Metals/Alloys	0.000	0.000
Aluminum-based Metals/Alloys	0.000	0.000
Other metals	0.000	0.000
Other Inorganic Materials	0.000	0.000
Cellulosics	100.000	0.000
Rubber	0.000	0.000
Plastic (Waste Materials)	0.000	0.000
Inorganic matrix	0.000	0.000
Organic matrix	0.000	0.000
Soils/gravel	0.000	0.000
Steel (packaging materials)	0.000	59.000
Plastic (packaging materials)	0.000	0.000
Cellulosics Packaging	0.000	0.000
MLLW Waste	0.000	0.000
Total--->	100.00	59.00

Container Filters

WDS Filter Code	Event	Event Date	Entered By	Remove	Other Filter Model	Exclude

Batch Id VNC14-00022 **Container Id** 10523495 **Analysis Id** 0000319560

Visual Exam Comment Remaing waste by weight percent is cellulosics consisting of blotter paper. Waste is from a pre filter change out. RJG 06/09/14

NF19SD	OTHER	09-Jun-2014	RGUNNING	N

Filter Comment

E-Signature History

Esig Approval I	User	Esig Date	Comment
2773599	JLANDON	09-JUN-2014 16:30:15	
2773598	RGUNNING	09-JUN-2014 16:30:13	

------End of VE Newly Generated Waste Closure Report-----

AMWTP
Advanced Mixed Waste Treatment Project

AMWTP

VE Newly Generated Waste Package Report

Date: 02-Oct-2014

Time: 06:53

Batch Id VNC14-00022

Analysis ID 0000319554 **Package ID** 10523505 **SAA Container ID** 10523495

VE Date 09-JUN-2014 16:16 **Package Wt.** 2.74 Lbs **Waste Activity** Other (describe)

Operator 1 ROSS J GUNNING **Equipment Id** FAC-VNC **Procedure Id** INST-FOI-17

Operator 2 JARED LANDON **Revision** 27

General

Closure Method Twisted and Taped **IDC** BN-508 **IDC Desc** AMWTP Newly Generated Debris

Visual Exam Comment Remaing waste by weight percent is cellulosics consisting of blotter paper. Waste is from a pre filter change out. RJG 06/09/14

Liquids

Liquids Present? No **Comment**

Liquid Between Liner and Drum 0 pints

Internal Container with Liquid 0 pints

Containerized Liquid pints

Other Liquids 0 pints

Total Liquid 0 pints

Internal Container with Liquid No

Prohibited Liquids Present No

Containerized Liquid

Contents

Sharp Objects? No **Are Sharp Objects Protected?** Yes

	Value	Comment
Prohibited Compressed Gas Present?	No	
Mercury Present?	No	
Explosives Present?	No	
PCBs Present?	No	
PCB Mass (lbs)	0	
Pyrophorics Present?	No	
Corrosives,Ignitables or Reactives Present?	No	
Wet Cell Batteries Present?	No	
Beryllium Contaminants Present?	No	
Hazardous Only Waste Present?	No	
Is Waste Incompatible with backfill, packaging materials, or shipping container materials?	No	
Sealed Containers Over 4L?	No	

Source Container

Is there a Source Container? No

Source Container ID	Location	IDC

AMWTP
Advanced Mixed Waste Treatment Project

AMWTP

VE Newly Generated Waste Package Report

Date: 02-Oct-2014

Time: 06:53

Batch Id VNC14-00022

Analysis ID 0000319554 **Package ID** 10523505

Waste Material Items

Packaging Materials

Material Item	Quantity	Unit	Unit Wt	Item Wt(lbs)

Waste Items by Weight

Material Item	Quantity	Unit	Unit Wt	Item Wt(lbs)
Plastic bag for waste	2.000	EACH	0.250	0.500
Flanders Prefilter	1.000	EACH	1.580	1.580

Waste Items by Volume

Material Item	Quantity	Unit	Unit Wt	Item Wt(lbs)

Waste Parameters

Waste Parameter	Remaining Weight %	Actual Weight Lbs
Iron-based Metals/Alloys	0.000	0.079
Aluminum-based Metals/Alloys	0.000	0.000
Other metals	0.000	0.000
Other Inorganic Materials	0.000	0.000
Cellulosics	100.000	1.924
Rubber	0.000	0.000
Plastic (Waste Materials)	0.000	0.737
Inorganic matrix	0.000	0.000
Organic matrix	0.000	0.000
Soils/gravel	0.000	0.000
Steel (packaging materials)	0.000	0.000
Plastic (packaging materials)	0.000	0.000
Cellulosics Packaging	0.000	0.000
MLLW Waste	0.000	0.000
Total Weight ---->		2.740

ESignature

Esig Id	User Id	Date	Comment
2773583	JLANDON	09-JUN-2014 16:16:40	
2773582	RGUNNING	09-JUN-2014 16:16:38	

------End of VE Newly Generated Waste Package Report-----

AMWTP
Advanced Mixed Waste Treatment Project

AMWTP
Checklist Report

Date: 02-Oct-2014
Time: 06:54

Batch Id VNC14-00022 **Open Date** 09-JUN-14 **Close Date** 09-JUN-14

Reviewer MARK SORENSON **Approval Level** Independent Technical Reviewer
Approval Date 30-SEP-14 **Review Iteration** 1

Question Text	Answer	Requirement	Comment
1. Is the QA documentation for the Batch Data Reports complete and includes data reports and QC results? o VE Batch Coversheet o Table of Contents (manual review only) o VE Analysis Reports o Analytical Balance Calibration Check Sheet (Form-1215), if applicable (manual review only) o ITR Checklist (Form-1415, manual review only) o Batch Data Report Supplemental Comment Form (Form-1491, manual review only) o Associated NCRs (referenced in WTS) o Audio/Video Recording References, if applicable	Yes		
2. Are there 20 containers or less in the batch?	Yes		
3. Was each VE Operator qualified at the time of the VE event?	Yes		
4. Was a VE data form completed for each container in the batch?	Yes		
Was the data generated in a technically correct manner using the correct revision of INST-OI-34, Non-facility Visual Examination or INST-FOI-17, Facility Visual Examination Operations, as applicable.	Yes		
6. Was the correct revision of the procedure documented on each analysis report?	Yes		
7. Was the E-signature History review performed?	Yes		
8. Was guidance from VEE documented, as applicable?	N/A		
9. Does every drum reported in the batch have a valid audio/video recording (as applicable)?	N/A		
10. Does the physical form match the waste stream description, waste matrix code and IDC?	Yes		
11. Did the VE event result in an IDC/Waste Matrix Code change? If so, was an NCR initiated?	No		
12. Were the waste material parameters documented correctly?	Yes		
13. Was the presence or absence of prohibited items properly identified? o If prohibited items were identified, were NCRs initiated?	Yes		
14. Has the description of rigid liners and layers of confinement been properly documented?	Yes		
15. Was the drum age criteria (DAC) entered correctly and completely? o Closure Method(s) o Liner Puncture Status o Layers of Confinement o Closure Date o Packaging Configuration o Type and number of filters, as applicable o Liner hole presence and diameter, as applicable	Yes		
16. Have filters been installed or removed from drum as recorded in WTS, as applicable?	N/A		
17. Hand calculations and unit conversions are correct? o Does the packaging weight plus the net weight equal the gross weight of the drum in the estimated waste material parameters, and for the unit conversions that are entered by volume or weight?	Yes		
18. Were all units and significant figures used correct for all reported volumes/weights?	Yes		

Batch Id VNC14-00022 **Open Date** 09-JUN-14 **Close Date** 09-JUN-14

Reviewer MARK SORENSON **Approval Level** Independent Technical Reviewer

Approval Date 30-SEP-14 **Review Iteration** 1

Question Text	Answer	Requirement	Comment
19. Has the data been reviewed for transcription errors as appropriate?	Yes		
20. Were the Visual Examination QAOs met? o Precision o Accuracy o Completeness o Comparability	Yes		
21. Is each data form signed by qualified VE Operators, as applicable per the appropriate procedure being used?	Yes		
22. Was the audio/video check satisfactory, as applicable?	N/A		
23. Was the scale or balance check weight event satisfactory, as applicable?	N/A		
24. Are the QC weight checks within the tolerance of the scale or balance, as applicable?	N/A		
25. Were any NCRs generated for drums containing prohibited items or any nonconforming conditions that failed to meet DQOs or QAOs? o Include the NCRs as appropriate, in the Batch Data Report.	No		
26. Were the rework requirements clearly identified in WTS or on the BDR?	N/A		No rework identified.

Batch Id VNC14-00022 **Open Date** 09-JUN-14 **Close Date** 09-JUN-14

Reviewer MARK SORENSON **Approval Level** Independent Technical Reviewer

Approval Date 30-SEP-14 **Review Iteration** 2

Question Text	Answer	Requirement	Comment
1. Is the QA documentation for the Batch Data Reports complete and includes data reports and QC results? o VE Batch Coversheet o Table of Contents (manual review only) o VE Analysis Reports o Analytical Balance Calibration Check Sheet (Form-1215), if applicable (manual review only) o ITR Checklist (Form-1415, manual review only) o Batch Data Report Supplemental Comment Form (Form-1491, manual review only) o Associated NCRs (referenced in WTS) o Audio/Video Recording References, if applicable	Yes		
2. Are there 20 containers or less in the batch?	Yes		
3. Was each VE Operator qualified at the time of the VE event?	Yes		
4. Was a VE data form completed for each container in the batch?	Yes		
Was the data generated in a technically correct manner using the correct revision of INST-OI-34, Non-facility Visual Examination or INST-FOI-17, Facility Visual Examination Operations, as applicable.	Yes		
6. Was the correct revision of the procedure documented on each analysis report?	Yes		
7. Was the E-signature History review performed?	Yes		
8. Was guidance from VEE documented, as applicable?	N/A		
9. Does every drum reported in the batch have a valid audio/video recording (as applicable)?	N/A		
10. Does the physical form match the waste stream description, waste matrix code and IDC?	Yes		
11. Did the VE event result in an IDC/Waste Matrix Code change? If so, was an NCR initiated?	No		
12. Were the waste material parameters documented correctly?	Yes		
13. Was the presence or absence of prohibited items properly identified? o If prohibited items were identified, were NCRs initiated?	Yes		
14. Has the description of rigid liners and layers of confinement been properly documented?	Yes		
15. Was the drum age criteria (DAC) entered correctly and completely? o Closure Method(s) o Liner Puncture Status o Layers of Confinement o Closure Date o Packaging Configuration o Type and number of filters, as applicable o Liner hole presence and diameter, as applicable	Yes		
16. Have filters been installed or removed from drum as recorded in WTS, as applicable?	Yes		
17. Hand calculations and unit conversions are correct? o Does the packaging weight plus the net weight equal the gross weight of the drum in the estimated waste material parameters, and for the unit conversions that are entered by volume or weight?	Yes		
18. Were all units and significant figures used correct for all reported volumes/weights?	Yes		

Batch Id VNC14-00022 **Open Date** 09-JUN-14 **Close Date** 09-JUN-14

Reviewer MARK SORENSON **Approval Level** Independent Technical Reviewer

Approval Date 30-SEP-14 **Review Iteration** 2

Question Text	Answer	Requirement	Comment
19. Has the data been reviewed for transcription errors as appropriate?	Yes		
20. Were the Visual Examination QAOs met? o Precision o Accuracy o Completeness o Comparability	Yes		
21. Is each data form signed by qualified VE Operators, as applicable per the appropriate procedure being used?	Yes		
22. Was the audio/video check satisfactory, as applicable?	N/A		
23. Was the scale or balance check weight event satisfactory, as applicable?	N/A		
24. Are the QC weight checks within the tolerance of the scale or balance, as applicable?	N/A		
25. Were any NCRs generated for drums containing prohibited items or any nonconforming conditions that failed to meet DQOs or QAOs? o Include the NCRs as appropriate, in the Batch Data Report.	No		
26. Were the rework requirements clearly identified in WTS or on the BDR?	N/A		No rework identified.

Batch Id VNC14-00022 **Open Date** 09-JUN-14 **Close Date** 09-JUN-14

Reviewer REED WALKER **Approval Level** SPM Data Validation

Approval Date 30-SEP-14 **Review Iteration** 1

Question Text	Answer	Requirement	Comment
(1) Has the batch received a Data Generation Level Independent Technical Review?	Yes	MP-TRUW-8.2, C3-10b(1)	
(2) Are the batch data review checklists complete?	No	MP-TRUW-8.2, C3-10b(1)	See batch comments.
(3) When identified, were PCBs, mercury, lead, or other hazardous contaminants consistent with the waste stream AK Summary Report(s) and/or AK documentation?	N/A	MP-TRUW-8.2, C4-3	
(4) Are any ignitable, corrosive, or reactive wastes identified?	No	MP-TRUW-8.2, C4-3	
(5) Are the packaging configurations identified on the VE consistent with the waste stream AK Summary Report(s) and/or AK documentation?	Yes	MP-TRUW-8.2, C4-3	
(6) Do the drums in this batch contain typical waste items consistent with waste stream AK Summary Report(s) and/or AK documentation?	Yes	MP-TRUW-8.2, C4-3	
(7) Are the Waste Matrix Codes and physical form descriptions consistent with AK?	Yes	MP-TRUW-8.2, C4-3	
(8) Have all AK discrepancies been resolved and have all AK Resolution checklists been approved? Reference all waste stream AK documentation used in review of this data package.	N/A	MP-TRUW-8.2, C4-3	No discrepancies identified.
(9) Does the batch report identify the correct implementing procedure number and revision number used for this testing method?	Yes	MP-TRUW-8.2, C3-4 and Table C3-11	
(10) Have the Waste Matrix Code (WMC) and IDC for all drums in the batch remained the same as originally assigned by the historical designation? NOTE: If not, note the drum number in the comment field and notify the Acceptable Knowledge Expert (AKE) if an NCR does not exist for the WMC and IDC change.	Yes	MP-TRUW-8.2, C-3c and C1-4	
(11) Does the physical form of the waste match the WMC, waste stream description, and identify the absence of prohibited items?	Yes	MP-TRUW-8.2, C-3c and C1-4	
(12) If observable liquids exist in the drum, is an estimate of quantity given?	N/A	MP-TRUW-8.2, C-3c and C1-4	No liquids identified.
(13) Precision: Have all discrepancies been reconciled between the operator and the ITR with regard to identification of WMC, liquids in excess of TSDF-WAC limits, and compressed gases?	Yes	MP-TRUW-8.2 C3-4b	
(14) Accuracy: Have all operators passed a comprehensive examination and demonstrated satisfactory performance in the presence of the VE expert during initial and subsequent qualifications?	Yes	MP-TRUW-8.2 C3-4b	
(15) Completeness: Has a validated VE data form been obtained for 100% of the waste containers subject to VE?	Yes	MP-TRUW-8.2 C3-4b	
(16) Comparability: Has the comparability of VE data from different operators been enhanced by use of standardized VE procedures and operator qualifications?	Yes	MP-TRUW-8.2 C3-4b	
(17) Does the data for all containers within this batch meet the review, validation, and verification requirements? · Are proper units (e.g. Liters or pounds) and significant figure used? · Is the BDR complete (all pages identified in the BDR and numbered according)? - VE Batch Coversheet - Table of Contents (manual review only) - VE Analysis Reports - Analytical Balance Calibration Checklist (if applicable) - ITR Checklist (Form-1415) - Associated NCRs	Yes	MP-TRUW-8.2, C3-10b and Table C3-11	

Batch Id VNC14-00022 **Open Date** 09-JUN-14 **Close Date** 09-JUN-14

Reviewer REED WALKER **Approval Level** SPM Data Validation
Approval Date 30-SEP-14 **Review Iteration** 1

Question Text	Answer	Requirement	Comment
- Audio/Video Recordings (if applicable)			
(18) Do the drum reports contain the (a) Batch Data Report number and date, (b) waste container number (c)WMC, (d) implementing procedure and revision, (e) audio/video recording reference, (f) audio and video QC checks were performed and satisfactory, (g) verification that the physical form matches the waste stream description and WMC, (h) absence of prohibited items, (i) gross container weight, (j) waste material parameter weights, and (k) signature and date of examination (signatures of both operators when applicable)?	Yes	MP-TRUW-8.2, C1-4 and Table C3-11	
(19) Is the description of container contents detailed enough to provide verification of estimated weights for the waste matrix parameters identified?	Yes	MP-TRUW-8.2, C1-4 and Table C3-11	
(20) Is there a valid second weight check for every 10 items?	N/A	MP-TRUW-8.2, C1-4	Not required for this batch.
(21) Verification of two operator signatures when doing VE?	Yes	MP-TRUW-8.2, C-3d(1) and Table C3-11	
(22) Are there 20 or fewer containers in the batch?	Yes	MP-TRUW-8.2, C1-3 and C3-10	
(23) Review all NCRs (open and closed). Can the batch be approved?	Yes	MP-TRUW-8.2, C3-13	
(24) All data associated with this BDR is acceptable for signature release?	No	MP-TRUW-8.2, C3-10b and C3-10b(1)	See batch comments.

Batch Id VNC14-00022 **Open Date** 09-JUN-14 **Close Date** 09-JUN-14

Reviewer REED WALKER **Approval Level** SPM Data Validation
Approval Date 01-OCT-14 **Review Iteration** 2

Question Text	Answer	Requirement	Comment
(1) Has the batch received a Data Generation Level Independent Technical Review?	Yes	MP-TRUW-8.2, C3-10b(1)	
(2) Are the batch data review checklists complete?	Yes	MP-TRUW-8.2, C3-10b(1)	
(3) When identified, were PCBs, mercury, lead, or other hazardous contaminants consistent with the waste stream AK Summary Report(s) and/or AK documentation?	N/A	MP-TRUW-8.2, C4-3	None were identified.
(4) Are any ignitable, corrosive, or reactive wastes identified?	No	MP-TRUW-8.2, C4-3	
(5) Are the packaging configurations identified on the VE consistent with the waste stream AK Summary Report(s) and/or AK documentation?	Yes	MP-TRUW-8.2, C4-3	
(6) Do the drums in this batch contain typical waste items consistent with waste stream AK Summary Report(s) and/or AK documentation?	Yes	MP-TRUW-8.2, C4-3	
(7) Are the Waste Matrix Codes and physical form descriptions consistent with AK?	Yes	MP-TRUW-8.2, C4-3	
(8) Have all AK discrepancies been resolved and have all AK Resolution checklists been approved? Reference all waste stream AK documentation used in review of this data package.	N/A	MP-TRUW-8.2, C4-3	No discrepancies identified.
(9) Does the batch report identify the correct implementing procedure number and revision number used for this testing method?	Yes	MP-TRUW-8.2, C3-4 and Table C3-11	
(10) Have the Waste Matrix Code (WMC) and IDC for all drums in the batch remained the same as originally assigned by the historical designation? NOTE: If not, note the drum number in the comment field and notify the Acceptable Knowledge Expert (AKE) if an NCR does not exist for the WMC and IDC change.	Yes	MP-TRUW-8.2, C-3c and C1-4	
(11) Does the physical form of the waste match the WMC, waste stream description, and identify the absence of prohibited items?	Yes	MP-TRUW-8.2, C-3c and C1-4	
(12) If observable liquids exist in the drum, is an estimate of quantity given?	N/A	MP-TRUW-8.2, C-3c and C1-4	No liquids identified.
(13) Precision: Have all discrepancies been reconciled between the operator and the ITR with regard to identification of WMC, liquids in excess of TSDF-WAC limits, and compressed gases?	Yes	MP-TRUW-8.2 C3-4b	
(14) Accuracy: Have all operators passed a comprehensive examination and demonstrated satisfactory performance in the presence of the VE expert during initial and subsequent qualifications?	Yes	MP-TRUW-8.2 C3-4b	
(15) Completeness: Has a validated VE data form been obtained for 100% of the waste containers subject to VE?	Yes	MP-TRUW-8.2 C3-4b	
(16) Comparability: Has the comparability of VE data from different operators been enhanced by use of standardized VE procedures and operator qualifications?	Yes	MP-TRUW-8.2 C3-4b	
(17) Does the data for all containers within this batch meet the review, validation, and verification requirements? · Are proper units (e.g. Liters or pounds) and significant figure used? · Is the BDR complete (all pages identified in the BDR and numbered according)? - VE Batch Coversheet - Table of Contents (manual review only) - VE Analysis Reports - Analytical Balance Calibration Checklist (if applicable) - ITR Checklist (Form-1415)	Yes	MP-TRUW-8.2, C3-10b and Table C3-11	

Batch Id VNC14-00022 **Open Date** 09-JUN-14 **Close Date** 09-JUN-14

Reviewer REED WALKER **Approval Level** SPM Data Validation

Approval Date 01-OCT-14 **Review Iteration** 2

Question Text	Answer	Requirement	Comment
- Associated NCRs - Audio/Video Recordings (if applicable)			
(18) Do the drum reports contain the (a) Batch Data Report number and date, (b) waste container number (c)WMC, (d) implementing procedure and revision, (e) audio/video recording reference, (f) audio and video QC checks were performed and satisfactory, (g) verification that the physical form matches the waste stream description and WMC, (h) absence of prohibited items, (i) gross container weight, (j) waste material parameter weights, and (k) signature and date of examination (signatures of both operators when applicable)?	Yes	MP-TRUW-8.2, C1-4 and Table C3-11	
(19) Is the description of container contents detailed enough to provide verification of estimated weights for the waste matrix parameters identified?	Yes	MP-TRUW-8.2, C1-4 and Table C3-11	
(20) Is there a valid second weight check for every 10 items?	N/A	MP-TRUW-8.2, C1-4	Not required for this batch.
(21) Verification of two operator signatures when doing VE?	Yes	MP-TRUW-8.2, C-3d(1) and Table C3-11	
(22) Are there 20 or fewer containers in the batch?	Yes	MP-TRUW-8.2, C1-3 and C3-10	
(23) Review all NCRs (open and closed). Can the batch be approved?	Yes	MP-TRUW-8.2, C3-13	
(24) All data associated with this BDR is acceptable for signature release?	Yes	MP-TRUW-8.2, C3-10b and C3-10b(1)	

Batch Id VNC14-00022 **Open Date** 09-JUN-14 **Close Date** 09-JUN-14

Esignature History

Esig Approval ID	User ID	Esig Date	Approval Level	Comments
2850863	RWALKER	01-OCT-14	SPM	SPM validation complete. Promote batch.
2850394	MSORENSON	30-SEP-14	ITR	Updated ITR checklist question # 16 to Yes. Promote to SPM.
2850388	RWALKER	30-SEP-14	SPM	Demoted batch back to ITR level for rework.
2849617	MSORENSON	30-SEP-14	ITR	Promote to SPM.

AMWTP
Advanced Mixed Waste Treatment Project

AMWTP

Non-Conformance Report

Date: 02-Oct-2014

Time: 06:55

*****Batch NCR(s)*****

Batch Type	VNC	Batch ID	VNC14-00022		
Trackwise Number		**Status**		**Opened Date**	**Closed Date**

*****Container NCR(s)*****

Container ID *or related Batch ID*	Trackwise Number	Status	Opened Date	Closed Date
10523495	88614	CLOSED	16-SEP-14	01-OCT-14

*****End of Non-Conformance Report*****

B-2012-0203
RECORD
JMC 10/02/12

GEN3

AMWTP
Advanced Mixed Waste Treatment Project

AK Source Document Review Summary

Form-1068, Rev. 4
Effective: 01/08/09

Implementing Document: MP-TRUW-8.13

1. Source Document Tracking Number: P609A	**2. Revision:** 7

3. Category

- [x] Published Documentation
- [ ] Unpublished Documentation
- [ ] Correspondence
- [ ] Discrepancy

4. Title/Description Information: BN004 Special Setups Waste Stream Profile Package, December 28, 2005; Change Notice #1, February 15, 2007; Change Notice #2, April 2, 2008; and Change Notice #3, August 5, 2010.

Document Number: N/A

Revision: N/A

Author: AMWTP
CBFO

Date: 12/28/05

5. AK Element	6. Generator Or Waste Type(s)	7. Location in Source Doc.	8. AK Information Summary:
WM3, WM4, WM5, WM6, WM7	RF	all	The WSPF package addresses all of the Waste Management Program (WM) elements by providing either a summary of the information or by identifying references to the documents (e.g. AK baseline and certification procedures) that contain the information; however, only the WM elements that are actually addressed in the package are identified on the Form-1068.
WS1, WS2, WS3, WS4, WS5, WS6, WS7, WS8	RF-004, RF-744, RF-802	AK Summary	AK summary addresses all of the waste stream elements.

9. Document Summary:

INFORMATION ONLY

Characterization information for the waste stream BN004 (special setups generated at Rocky Flats) submitted to and approved by CBFO. This package includes the following documentation:

- CBFO Approval letter of CN #3 for WSPF BN004, 8/5/10
- Change Notice # 3 for WSPF BN004, 7/27/10
- CBFO Approval letter of CN #2 for WSPF BN004, 4/2/08
- Change Notice # 2 for WSPF BN004, 3/27/08
- CBFO Approval letter of CN #1 for WSPF BN004, 2/15/07
- Change Notice # 1 for WSPF BN004, 2/12/07
- CBFO Approval letter for WSP BN004, 12/28/05
- Waste Stream Profile Form-1195, DQO Form-1597, and CIS Form-1598 for BN004, Rev. 0, 12/28/05
- Acceptable Knowledge Summary, RPT-TRUW-59, Rev. 4, 06/27/12
- Waste Stream Profile Form HWN Assignment Worksheet Form-1187 for BN004, 3/30/06
- TRU Waste Management AK Documentation Checklist Form-1067 for BN004, 9/16/10
- LDR Notification – IDCs RF-004, RF-744 and RF-802, Waste Stream BN004
- AMWTP transmittal letter WSP BN004, SPC-087-2005, 12/21/05

Revision 2 reorganized profile package to only contain the latest version of the above documents.
Revision 3 updated record to include Change Notice #1 and revised AK Summary Report (RPT-TRUW-59).
Revision 4 updated record to include revised Form-1067.
Revision 5 updated record to include Change Notice #2 and revised AK Summary Report (RPT-TRUW-59).
Revision 6 updated record to include Change Notice #3 and revised AK Summary Report (RPT-TRUW-59).
Revision 7 updated record to include revised AK Summary Report (RPT-TRUW-59, Rev. 4).

The above documents address all of the Waste Management Program (WM) elements by providing either a summary of the information or by identifying a reference to the document(s) that contain the information. Therefore, the WM elements identified above are for those elements that are actually addressed in the package.

Previous versions are archived in EDMS.

10. Source Document Data Limitations (if any):

None

		Julie Collins		10/2/2012
11.	AK Expert:	Print	Sign	Date

P609A R7

Department of Energy
Carlsbad Field Office
P. O. Box 3090
Carlsbad, New Mexico 88221

AUG - 5

Mr. James Cooper, Acting Deputy Manager
U.S. Department of Energy
Idaho Clean-Up Project
Idaho Operations Office (NE-ID)
1955 Fremont Avenue
Idaho Falls, ID 83401-1222

Subject: Review of Update for the WIPP Operating Record (Change Notice #3) Special Setups Waste (BN004, Rev. 0)

Dear Mr. Cooper:

The Carlsbad Field Office (CBFO) has reviewed the Change Notice Number 3 for Special Setups Waste (BN004, Rev. 0) and concluded that the Change Notice is complete and the waste stream determinations were made in accordance with the applicable procedures and guidance.

The CBFO therefore approves the Change Notice as submitted. Using the methods approved by the Advanced Mixed Waste Treatment Project (AMWTP), AMWTP may enter the data into the certification and shipping modules of the WIPP Waste Information System.

If you have questions on this matter, please contact me at (575) 234-7372.

Sincerely,

Donald C. Gadbury, Director
Office of the National TRU Program

cc:

G. Basabilvazo, CBFO	*ED
C. Gadbury, CBFO	ED
S. McCauslin, CBFO	ED
D. Miehls, CBFO	ED
M. Navarrete, CBFO	ED
K. Watson, CBFO	ED
P. Gilbert, LANL	ED
S. Lott, LANL	ED
G. Lyshik, LANL	ED
CBFO, M&RC	

*ED denotes electronic distribution

CBFO:NTP:NC:GS:10-1468:UFC 5900.00

Update for WIPP Operating Record (Change Notice #3)

Special Setups Waste (BN004, Rev. 0)

Please add the following information to the WIPP Operating Record for Waste Stream Profile Form (WSPF) BN004, Revision 0. This waste stream is Special Setups Waste and was approved by DOE/CBFO on December 28, 2005. Change Notice #1 was approved on February 15, 2007 and Change Notice #2 was approved on April 2, 2008.

This WSPF is being revised. The WSPF Form-1195 and AK Summary components are bolded. The updates are:

1. **WSPF Form-1195, Date of audit report approval by NMED**

   Revise NMED audit dates to include 7/2/2004, 1/9/2009 and 1/8/2010

2. **WSPF Form-1195, Title, version, number, and date of documents use for WAP Certification**

   Update the following procedures:

   Certification Plan for INL Transuranic Waste, MP-TRUW-8.1, Rev. 19, 6/30/2010

   Quality Assurance Project Plan, MP-TRUW-8.2, Rev. 13, 6/30/2010

   CCP Transuranic Authorized Methods For Payload Control (CCP CH-TRAMPAC), CCP-PO-003, Rev. 11, 6/4/2009

3. **WSPF Form-1195, Waste Stream Information, WIPP ID**

   Add IN-BN004

4. **WSPF Form-1195, Waste Stream Information, Description from the WTWBIR**

   Change description to:

   See Section 1.2.10 of AK Summary

5. **WSPF Form-1195, Waste Stream Information, Number of Drums**

   Change Number of Drums to 2,302 (55 gallon drums)

Update for WIPP Operating Record (Change Notice #3)

Special Setups Waste (BN004, Rev. 0)

6. **AK Summary for Special Setups Waste (BN004) (RPT-TRUW-59), Acronyms**

Add the following acronyms:

ATWIR	Annual Transuranic Waste Inventory Report
CH-TRAMPAC	Contact Handled Transuranic Waste Authorized Methods for Payload Control
CFR	Code of Federal Regulations
DOE	Department of Energy
EDMS	Electronic Document Management System
HF	hydrofluoric acid
nCi/g	nanocuries per gram
ppm	parts per million
PRQL	program required quantitation limit
RFETS	Rocky Flats Environmental Technology Site
SDA	Subsurface Disposal Area
TSA-RE	Transuranic Storage Area-Retrieval Enclosure
UCL_{90}	90% upper confidence limit
VE	Visual Examination
VOCs	Volatile Organic Compounds
WTS	Waste Tracking System

Also spell out the above acronyms in their first use in the AK Summary, as required.

7. **AK Summary for Special Setups Waste (BN004) (RPT-TRUW-59), Section 1.2.3, Waste Stream Volume**

Replace first line with the following:

2,302 55-gallon containers (480 m^3) – current volume [3]

8. **AK Summary for Special Setups Waste (BN004) (RPT-TRUW-59), Section 1.2.4, Generation Dates**

Change first sentence as follows:

AMWTP stored containers of Rocky Flats Special Setups waste generated from 1968 to 1988. [66]

9. **AK Summary for Special Setups Waste (BN004) (RPT-TRUW-59), Section 1.2.6, Transuranic Waste Baseline Inventory Report (TWBIR) Information**

Change title to:

Waste Isolation Pilot Plant (WIPP) Waste Stream ID

Update for WIPP Operating Record (Change Notice #3)

Special Setups Waste (BN004, Rev. 0)

Change Section 1.2.6 as follows:

Annual Transuranic Waste Inventory Report (ATWIR) Waste Stream ID: IN-BN004 [formerly identified as Transuranic Waste Baseline Inventory Report (TWBIR) Waste Stream ID: IN-W157] [5, 67]

10. **AK Summary for Special Setups Waste (BN004) (RPT-TRUW-59), Section 1.2.10, Description from the TWBIR**

Change title to:

Descriptions from the TWBIR and ATWIR

Replace Section 1.2.10 as follows:

TWBIR waste stream description:

This waste, generated at RF, consists of liquids absorbed on a cement mixture. The liquid wastes were not compatible with aqueous treatment processes and are handled separately due to their plutonium complexing nature. [5]

ATWIR waste stream description:

IN-BN004 (Special Setups) waste was generated from a waste treatment process (predominately laboratory waste) generated in support of plutonium operations at RFETS. Resins and electrochemical milling sludges were also solidified with the liquid waste. This waste stream is comprised of solidified waste assigned IDC ID-RF-004 and ID-RF-802. Special Setups consists of waste >50% by volume inorganic solidified waste. Specifically, small quantities of liquids solidified in large quantities of cement. [a (67)]

a. The description in the Annual Transuranic Waste Inventory Report (ATWIR) will be revised in the next annual update to add IDC RF 744 and revise the waste stream description to "IN-BN004 (Special Setups) waste was generated from treating wastes (predominately laboratory waste) generated in support of plutonium operations at Rocky Flats. Resins and electrochemical milling sludges were also solidified with the liquid waste. This waste stream is comprised of solidified waste assigned IDC ID-RF-004, ID-RF-744 and ID-RF-802."

11. **AK Summary for Special Setups Waste (BN004) (RPT-TRUW-59), Section 1.3.1, Description**

Replace third sentence of first paragraph as follows:

This waste stream is comprised of solidified waste assigned Item Description Codes (IDCs) RF 004, RF 744, and RF 802.

Update for WIPP Operating Record (Change Notice #3)

Special Setups Waste (BN004, Rev. 0)

Replace Table 1-1 as follows:

IDC	WMC	Description
RF 004	S3150	Special Setups Waste – Building 774
RF 744	S3150	Pits 11 and 12 Special Setups
RF 802	S3150	Solidified Laboratory Waste – Building 774

Change second sentence in second paragraph as follows:

A mixture of Portland cement and insulation cement (magnesia cement) was placed in a lined 55-gallon drum and identified with container prefix 744.

Insert following as 3rd paragraph:

Pits 11 and 12 Special Setups (RF 744). RF 744 was assigned by AMWTP to Special Setups containers retrieved from Subsurface Disposal Area (SDA) Pits 11 and 12 and identified with container prefix 744. The process and inputs were the same as waste containers identified as RF 004. The retrieved waste containers were originally generated prior to 1972, shipped to INL and buried in Pits 11 and 12. The waste containers were subsequently retrieved from the pits prior to 1979 and placed in the Transuranic Storage Area-Retrieval Enclosure (TSA-RE).[3]

12. **AK Summary for Special Setups Waste (BN004) (RPT-TRUW-59), Section 1.5, Prohibited Items**

Revise first paragraph as follows:

The following items are prohibited at the WIPP in accordance with Section B-1c of MP-TRUW-8.2, Quality Assurance Project Plan, and Section 3 of MP-TRUW-8.1, Certification Plan for INL Transuranic Waste. [9, 63]

Add the following as the last bullet:

- Sealed containers greater than four liters.

Add the following sentence to the end of the last paragraph:

Non-hazardous solidification agents Aquaset®, Aquaset II-G®, and Micro-Cel® E may be added to the waste by AMWTP to treat liquid in excess of WIPP-WAC limits. [64, 65]

13. **AK Summary for Special Setups Waste (BN004) (RPT-TRUW-59), Section 1.6.2, Hazardous Determination**

Add the following as the third sentence under Ignitability:

Furthermore non-hazardous absorbents (i.e., cement, vermiculite, and Oil-Dri®) were added during packaging for purposes of absorbing liquids. Containers identified with liquid in excess of WIPP-WAC limits may be treated using non-hazardous solidification agents (e.g., Aquaset®, Aquaset II-G®, or Micro-Cel® E) to render the waste acceptable prior to shipment. [64, 65]

Replace the third sentence under Corrosivity with the following:

Furthermore, absorbents (i.e., cement, vermiculite, and Oil-Dri®) were added during packaging for purposes of absorbing liquids. [7, 18, 19, 20, 21] Containers identified with liquid in excess of WIPP-WAC limits may be treated using non-hazardous solidification agents to render the waste acceptable prior to shipment (e.g., Aquaset®, Aquaset II-G®,or Micro-Cel® E). [64, 65]

Add the following sentence under Reactivity, before the last sentence:

Containers identified with compressed gases or aerosol cans will have the prohibited items treated/removed prior to shipment. Containers with liquid in excess of WIPP-WAC limits may be treated with non-hazardous solidification agents to render the waste acceptable prior to shipment (e.g., Aquaset®, Aquaset II-G®, or Micro-Cel® E). [64, 65]

14. AK Summary for Special Setups Waste (BN004) (RPT-TRUW-59), Section 1.7, Radionuclides

Delete reference 3 from first sentence.

15. AK Summary for Special Setups Waste (BN004) (RPT-TRUW-59), Section 2.1, Waste Packaging

Add the following paragraph to the end of Section 2.1:

Some of the 55-gallon drums may be overpacked into 83- or 85-gallon drums. Either four 55-gallon drums or two 83- or 85-gallon drums, with either the drum lid filters or the drum lids removed, may be direct loaded into an SWB equipped with approved filters.

16. AK Summary for Special Setups Waste (BN004) (RPT-TRUW-59), Section 3, References

Revise the Note as follows:

AMWTP documents such as procedures, AK reports, and operating instructions, are cited without revision numbers or dates. The most recent revisions of these documents are available through the AMWTP Electronic Document Management System. Previous revisions are available on EDMS.

Update for WIPP Operating Record (Change Notice #3)

Special Setups Waste (BN004, Rev. 0)

Revise references as follows:

7. DOE/WIPP-02-3122, Transuranic Waste Acceptance Criteria for the Waste Isolation Pilot Plant, Rev. 6.5, June 30, 2010

61. CCP-PO-003, CCP Transuranic Authorized Methods For Payload Control (CCP CH-TRAMPAC), Central Characterization Project, Rev 11, June 4, 2009

Replace the following references:

3. NDK-001-10, Memo to file, Estimation of Number of Drums for BN004 Waste Stream, July 5, 2010 [C876A]

9. MP-TRUW-8.1, Certification Plan for INL Transuranic Waste

52. INST-OI-34, Non-Facility Visual Examination Operations [P387A]

Add the following references:

64. Material Safety Data Sheets, Aquaset® (sodium montmorillonite)and Aquaset II-G® (sepiolite), Fluid Tech, January 1, 2005 and November 1, 2008 [P881S]

65. Material Safety Data Sheet, Micro-Cel®E, Celite Corporation, January 17, 2007 [P808S]

66. RCM-001-10, Memo to file, Earliest Pack Date for Rocky Flats Waste Retrieved from Pits 11 and 12, July 5, 2010 [C875S]

67. DOE/TRU-2008-3425, Annual Transuranic Waste Inventory Report – 2009 [P838A]

Reason/Justification for the Changes

Item 1. WSPF Form-1195, the audit report approval dates were updated to reflect all audit dates.

Item 2. WSPF Form-1195, the documents used for WAP certification were revised to reflect the most recent revisions.

Items 3, 4, 9, and 10. WSPF Form-1195, TWBIR information was updated to reflect the WIPP ID and description from the most recent annual update of the TWBIR.

Items 5 and 7. WSPF Form-1195 and AK Summary Report Section 1.2.3, Volume was changed to waste stream due to the addition of Special Setups containers retrieved from the SDA Pits 11 and12 and identified with container prefix 744. The retrieved waste containers were originally generated prior to 1972, shipped to INL and buried in Pits 11 and 12. The waste containers were subsequently retrieved from the pits prior to 1979 and placed in the TSA-RE. The Special Setups waste containers retrieved from Pits 11 and 12

were generated from the same process as the waste containers already included in BN004. Therefore, there is no impact on the EPA hazardous waste numbers assigned to waste stream BN004.

Item 6. AK Summary Report Acronym and Abbreviation list was updated to reflect all acronyms and abbreviations used in the report. The text of the AK Summary was also updated to spell out the first use of each acronym.

Item 8. AK Summary Report Section 1.2.4 was changed to reflect an earlier waste generation date due to the addition of the Special Setups waste containers retrieved from Pits 11 and 12.

Item 11. AK Summary Report Section 1.3.1, Section revised to include a description of Special Setups waste containers retrieved from Pits 11 and 12 and assigned RF-744.

Item 12. AK Summary Report Section 1.5, Prohibited Items was changed to address all prohibited WIPP waste in accordance with MP-TRUW-8.1, Certification Plan for INL Transuranic Waste and MP-TRUW-8.2, Quality Assurance Project Plan. The last paragraph was modified to clarify disposition of containers identified as containing prohibited liquid with non-hazardous absorbents.

Item 13. AK Summary Report Section 1.6.2, Language under Ignitability, Corrosivity and Reactivity was changed to support the recent WIPP Permit Modification concerning prohibited liquids.

Item 14. AK Summary Report Section 1.7, Reference 3 no longer applies.

Item 15. AK Summary Report Section 2.1 was changed to add a paragraph describing potential direct loading of containers into SWBs.

Item 16. AK Summary Section 3, References, was changed to update the note to reflect current practices of Document Control and to identify references that support the information revised or updated in the AK Summary.

Update for the WIPP Operating Record (BN004) certification:
I hereby certify that I have reviewed this Update for WIPP Operating Record, and it is complete and accurate to the best of my knowledge. I understand that this information will be made available to regulatory agencies and that there are significant penalties for submitting false information, including the possibility of fines and imprisonment for knowing violations.

Signature of Site Project Manager	Printed Name and Title	Date
	Eric P. Schweinsberg, SPM	7/27/10

Washington
TRU Solutions LLC

WRES:08:143
UFC:5822.00

April 2, 2008

Mr. Richard Provencher, Deputy Manager
U.S. Department of Energy
Idaho Clean-up Project
Idaho Operations Office (NE.ID)
1955 Fremont Avenue
Idaho Falls, ID 83401-1222

Subject: UPDATE FOR WIPP OPERATING RECORD (CHANGE NOTICE #2) SPECIAL SETUPS WASTE (BN004, REV. 0)

Dear Mr. Provencher:

Washington TRU Solutions LLC, on behalf of the Permittees, has approved the Change Notice Number 2 for Advanced Mixed Waste Treatment Project (AMWTP) Waste Stream Profile Form (WSPF) BN004, Rev. 0, Special Setups Waste. We have concluded that the WSPF is complete and that the waste stream determination was made in accordance with applicable procedures and guidance.

We therefore approve the Change Notice as submitted. Using the methods approved at AMWTP, AMWTP may enter the data into the certification and shipping modules of the WIPP Waste Information System.

If you have any questions on this matter, please contact me at (505) 234-7545.

Sincerely,

W. M. Wierzbicki, Manager
Regulatory Compliance

KSG:ks

Enclosure

P.O. Box 2078 • Carlsbad, New Mexico USA 88221-2078
Phone: (575) 234-7200 • Fax: (575) 234-7083

Update for WIPP Operating Record (Change Notice # 2)

Special Setups Waste (BN004, Rev. 0)

Please add the following information to the WIPP Operating Record for Waste Stream Profile Form (WSPF) BN004, Revision 0. This waste stream is Special Setups Waste and was approved by DOE/CBFO on December 28, 2005. Change Notice #1 was approved on February 15, 2007.

This WSPF is being revised. The WSPF Form-1195 and AK Summary components are bolded. The updates are:

1. **WSPF Form-1195, Date of audit report approval by NMED**

   Add additional audit approval date January 18, 2008.

2. **WSPF Form-1195, Title, version, number, and date of documents use for WAP Certification**

   Update the following procedures:

   Certification Plan for INL Transuranic Waste, MP-TRUW-8.1, Rev. 14, 12/27/07.

   Quality Assurance Project Plan, MP-TRUW-8.2, Rev. 10, 10/25/07.

   Delete the following procedure:

   Contact-Handled Transuranic Waste Authorized Methods for Payload Control, MP-TRUW-8.3, Rev. 6, 07/01/06

   Add the following procedure:

   CCP Transuranic Authorized Methods For Payload Control (CCP CH-TRAMPAC), CCP-PO-003, Rev. 10, 11/16/06.

3. **AK Summary, Special Setups Waste (RPT-TRUW-59), Report Number**

   Revise report number from AMWTP-RPT-TRUW-59 to RPT-TRUW-59.

4. **AK Summary, Special Setups waste (RPT-TRUW-59), Section 1.2.6, Transuranic Waste Baseline Inventory Report (TWBIR) Information**

   Revise the TWBIR number to IN-W157.144

5. **AK Summary, Special Setups waste (RPT-TRUW-59), Section 1.3.1, Description**

   Revise the TWBIR number in Table 1-1 to IN-W157.144

Update for WIPP Operating Record (Change Notice # 2)

Special Setups Waste (BN004, Rev. 0)

6. **AK Summary, Special Setups waste (RPT-TRUW-59), Section 1.5, Prohibited Items**

Add the following bullets to the first paragraph:

- Waste that has ever been managed as high-level waste and waste from tanks specified in Table B-8 of MP-TRUW-8.2, Quality Assurance Plan, unless specifically approved through a Class 3 permit modification. (63)

- Any waste container from a waste stream (or waste stream lot) that has not undergone either radiographic or visual examination of a statistically representative subpopulation of the waste stream in each shipment, as describe in Attachment B7 of MP-TRUW-8.2, Quality Assurance Project Plan. (63)

Revise the first paragraph after the bullets to read:

The absence of prohibited items is determined and documented through acceptable knowledge (AK) and characterization activities. Real-time radiography (RTR) or visual examination (VE) is performed on each container in this waste stream to verify the absence of prohibited items. (51, 52) Containers that are identified as containing prohibited items during RTR or Visual Examination (VE) are treated or rejected, as appropriate. Drums containing prohibited items will not be shipped to WIPP.

7. **AK Summary, Special Setups Waste (RPT-TRUW-59), Section 2.2, Flammability Considerations**

Revise last sentence as follows:

Payloads containing flammable VOCs are managed in accordance with CCP-PO-003, CCP Transuranic Authorized Methods for Payload Control (CCP CH-TRAMPAC). (61)

8. **AK Summary, Special Setups Waste (RPT-TRUW-59), Section 3, References**

Revise the following references:

5. DOE/TRU-2006-3344, Transuranic Waste Baseline Inventory Report 2004, U. S. Department of Energy

7. DOE/WIPP-02-3122, Transuranic Waste Acceptance Criteria for the Waste Isolation Pilot Plant, October 29, 2007

Add the following references:

60. Interim Guidance on Ensuring that Waste Qualifies for Disposal at the Waste Isolation Pilot Plant [P203A]

61. CCP-PO-003, CCP Transuranic Authorized Methods For Payload Control (CCP CH-TRAMPAC), Central Characterization Project, Rev. 10, November 16, 2006

Update for WIPP Operating Record (Change Notice # 2)

Special Setups Waste (BN004, Rev. 0)

62. RPT-TRUW-05, Waste Matrix Code Reference Manual [P399A]

63. MP-TRUW-8.2, Quality Assurance Project Plan (QAPjP)

Reason/Justification for the Changes

The audit report approval dates were updated to reflect the most recent approval date.

The documents used for WAP certification were revised to reflect the most recent revisions and to identify new TRAMPAC procedure required to support change in shipping contractor at AMWTP.

The AK Summary report number was changed to reflect changes in document control protocols.

AK Summary Section 1.2.6, Transuranic Waste Baseline Inventory Report (TWBIR) Information, was changed to update the TWBIR number to reflect the current TWBIR.

AK Summary, Special Setups waste (RPT-TRUW-59), Section 1.3.1, Description, was changed to update the TWBIR number to reflect the current TWBIR.

AK Summary Section 1.5, Prohibited Items, was changed to add two prohibited items to reflect the requirements of the updated Quality Assurance Project Plan, MP-TRUW-8.2, Section B-1c and to incorporate a variety of approved treatment methods.

AK Summary Section 2.2, Flammability Consideration, was updated to reflect new TRAMPAC procedure.

AK Summary Section 3, References, was updated to identify references that support the information revised or updated in the AK Summary.

Update for the WIPP Operating Record (BN004) certification:
I hereby certify that I have reviewed this Update for WIPP Operating Record, and it is complete and accurate to the best of my knowledge. I understand that this information will be made available to regulatory agencies and that there are significant penalties for submitting false information, including the possibility of fines and imprisonment for knowing violations.

Signature of Site Project Manager	Printed Name and Title	Date
	Eric P. Schweinsberg, SPM	3/27/08

Washington
TRU Solutions LLC

WRES:07:032
UFC:5822.00

February 15, 2007

Mr. Richard Provencher, Deputy Manager
U.S. Department of Energy
Idaho Clean-up Project
Idaho Operations Office (NE.ID)
1955 Fremont Avenue
Idaho Falls, ID 83401-1222

Subject: UPDATE FOR WIPP OPERATING RECORD (CHANGE NOTICE #1) SPECIAL SETUPS WASTE (BN004, REV. 0)

Dear Mr. Provencher:

Washington TRU Solutions, on behalf of the Permittees, has approved the Change Notice Number 1 for Advanced Mixed Waste Treatment Project (AMWTP) Waste Stream Profile Form (WSPF) BN004, Rev. 0, Special Setups Waste. We have concluded that the WSPF is complete and that the waste stream determination was made in accordance with applicable procedures and guidance.

We therefore approve the Change Notice as submitted. Using the methods approved at AMWTP, AMWTP may enter the data into the certification and shipping modules of the WIPP Waste Information System.

If you have any questions on this matter, please contact me at (505) 234-7545.

Sincerely,

W. M. Wierzbicki, Manager
Regulatory Compliance

WMW:ks

Enclosure

P.O. Box 2078 • Carlsbad, New Mexico USA 88221-2078
Phone: (505) 234-7200 • Fax: (505) 234-7083

Update for WIPP Operating Record (Change Notice # 1)

Special Setups Waste (BN004, Rev. 0)

Please add the following information to the WIPP Operating Record for Waste Stream Profile Form (WSPF) BN004, Revision, 0. This waste stream is Special Setups Waste and was approved by DOE/CBFO on December 28, 2005.

This WSPF is being revised. The WSPF Form-1195 and AK Summary components are bolded. The updates are:

1. **WSPF Form-1195, Date of audit report approval by NMED**

   Delete audit approval dates 7/03/04 and 10/25/05 and add additional audit approval dates 4/1/05, 12/9/05, and 1/23/07.

2. **WSPF Form-1195, Title, version, number, and date of documents use for WAP Certification**

   Update the following procedures:

   Certification Plan for INL Transuranic Waste, MP-TRUW-8.1, Rev. 12, 1/24/07

   MP-TRUW-8.3, Contact-Handled Transuranic Waste Authorized Methods for Payload Control, Rev. 6, 7/01/06

   MP-TRUW-8.2, Quality Assurance Project Plan, Rev. 8, 1/24/07

3. **WSPF Form-1195, Required Waste Stream Information, new item entitled Waste material parameter weight estimates per unit of waste**

   Add the new item: See Section 1.4.5, Table 1-3 of the AK summary. This is listed as Item 5 in the Change Notice.

4. **AK Summary, Special Setups Waste (AMWTP-RPT-TRUW-59), TABLES**

   Revise Table of Contents per the following:

   Delete Table 1-3 Estimated percentage of various materials in BN004

   Change Table 1-4 Waste material parameters for Special Setups waste (BN004) to Table 1-3 Estimated waste material parameter weights per unit of waste for Special Setups waste (BN004)

5. **AK Summary, Special Setups waste (AMWTP-RPT-TRUW-59), Section 1.4, Process Description**

   Section 1.4.4, Material Inputs; delete last paragraph and delete Table 1-3

   Delete Section 1.4.5 and Table 1-4.

Update for WIPP Operating Record (Change Notice # 1)

Special Setups Waste (BN004, Rev. 0)

Add Section 1.4.5 Waste Material Parameters:

1.4.5 Waste Material Parameters

To estimate the waste material parameter (WMP) weight percentages for BN004, waste material parameter data from 100% of the completed RTR and VE of Special Setups waste drums were obtained from the AMWTP Waste Tracking System (WTS) database on October 11, 2006. This represents 49% of the estimated number of drums for this waste stream. The Special Setups waste was generated at RF from 1971 through 1988. Drums evaluated to estimate the WMP weights per unit of waste were generated from 1972 through 1988. Approximately 3% of the waste was generated prior to 1972. AK indicates that the waste generated in 1971 is similar to the wastes that have undergone RTR and VE. Therefore, the WTS data is representative of the waste stream. WTS is AMWTP's comprehensive, DOE-audited waste tracking database in which all waste containers are tracked cradle-to-grave and all related characterization data are stored. A statistical analysis of the RTR and VE data was performed to estimate WMP weights (by percent) for Special Setups waste, excluding packaging, in accordance with the requirements of MP-TRUW-8.13, Collection, Review, and Management of Acceptable Knowledge Documentation, and are summarized in Table 1-3. [50, 57, 58, 59]

Table 1-3. Estimated waste material parameter weights per unit of waste for Special Setups waste (BN004).

Waste Material Parameters	Weight per Unit Waste by Percent
Iron-based Metals/Alloys	<1
Aluminum-based Metals/Alloys	<1
Inorganic matrix	99
Other Inorganic Materials	<1
Cellulosics	<1
Plastics (waste materials)	<1
Rubber	<1

Although individual drums in this waste stream may contain other homogenous solid waste and debris materials, the waste stream as a whole will be greater than 50%, by volume, inorganic solidified homogeneous solids [2, 50]

6. **AK Summary, Special Setups Waste (AMWTP-RPT-TRUW-59), Section 2, Shipping Considerations**

Section 2.2 Flammability Considerations, change to read as follows:

The payload containers in the waste stream must comply with the Contact-Handled Transuranic Waste Authorized Methods for Payload Control (CH-TRAMPAC) requirements. As specified in the CH-TRAMPAC, a determination of compliance with

the flammable gas limits will be performed for volatile organic compounds (VOCs), hydrogen, and methane. Headspace gas sampling and analysis is performed when required by the WAP and/or CH-TRAMPAC. At a minimum, the headspace gas analytical results are evaluated to determine the total concentration of flammable VOCs present in the waste. Payload containers, including those with headspace gas results exceeding 500 ppm flammable VOCs, are evaluated for compliance with applicable CH-TRAMPAC requirements prior to shipment. Payloads containing flammable gases are managed in accordance with MP-TRUW-8.3, Contact-Handled Transuranic Waste Authorized Methods for Payload Control (CH-TRAMPAC).

7. **AK Summary, Special Setups Waste (AMWTP-RPT-TRUW-59), Section 3, References**

Update reference number 50 to Memorandum to File from Tim Venneman, "Waste Material Parameter Weight Calculations and Supporting Data to Determine Waste Material Parameter Weight per Unit of Waste." TV-001-07, January 19, 2007. (C534A)

Add the following as reference number 57: MP-TRUW-8.13, Collection, Review and Management of Acceptable Knowledge Documentation, Rev. 15, January 2007.

Add the following as reference number 58: BBWI-Generated Drum Data, including Data from the Transuranic Waste Management Information System (TWMIS). (U127A)

Add the following as reference number 59: AMWTP-RPT-TRUW-56, Acceptable Knowledge Document for INL Stored Transuranic Waste – Rocky Flats Plant, Rev. 0, August 2006. (P469A)

Reason/Justification for the Change

The NMED audit report approval dates were revised and updated to reflect the approval dates for audits conducted subsequent to the WSPF submittal and to delete the approval dates for non-S3000 audits or recertification (i.e., 7/2/04 was the approval date for the HSG system and 10/25/05 is a recertification date for S3000).

Documents used for WAP certification were revised to reflect the most recent revisions.

New item entitled waste material parameter weight estimates per unit of waste was added to WSPF Form 1195 as required by MP-TRUW-8.2, Quality Assurance Project Plan, Section B3-12b.

Table of Contents for the AK Summary was revised to accommodate changes required by the revised WIPP Hazardous Waste Facility Permit requirements as described in MP-TRUW-8.2, Quality Assurance Project Plan, Section B3-12b.

Table 1-3 and last paragraph were deleted from Section 1.4.4 of the AK Summary because cellulosic, plastic, and rubber information was incorporated into Section 1.4.5, Waste Material Parameters.

Update for WIPP Operating Record (Change Notice # 1)

Special Setups Waste (BN004, Rev. 0)

Waste material parameter weight estimates per unit of waste and method for determining those estimates have been incorporated into Section 1.4.5 and Table 1-3 of the AK Summary to meet the revised WIPP Hazardous Waste Facility Permit requirements as described in MP-TRUW-8.2, Quality Assurance Project Plan, Section B3-12b.

Flammability consideration was changed to clarify the method used for determining flammability as described in MP-TRUW-8.2, Quality Assurance Project Plan, Section B3-11a.

Special Setups Waste (BN004) AK Summary reference list was updated to identify references that support the information revised or updated in the AK Summary.

Update for the WIPP Operating Record (BN004) certification:
I hereby certify that I have reviewed this Update for WIPP Operating Record, and it is complete and accurate to the best of my knowledge. I understand that this information will be made available to regulatory agencies and that there are significant penalties for submitting false information, including the possibility of fines and imprisonment for knowing violations.

Signature of Site Project Manager	Printed Name and Title	Date
Eric P. Schweinsberg	Eric P Schweinsberg, SPM	2/12/07

Washington
TRU Solutions LLC

WRES:05:183
UFC:5822.00

December 28, 2005

Mr. Richard Provencher, Deputy Manager
U.S. Department of Energy
Idaho Clean-up Project
Idaho Operations Office (NE.ID)
1955 Fremont Avenue
Idaho Falls, ID 83401-1222

Subject: TRANSMITTAL OF APPROVED ADVANCED MIXED WASTE TREATMENT PROJECT WASTE STREAM PROFILE FORM NUMBER BN004, SPECIAL SETUPS WASTE

Dear Mr. Provencher:

Washington TRU Solutions LLC, on behalf of the Permittees, has evaluated the Advanced Mixed Waste Treatment Project (AMWTP) Waste Stream Profile Form (WSPF) BN004, Special Setups Waste. We have concluded that the WSPF is complete and that the waste stream determination was made in accordance with applicable procedures and guidance.

The Permittees therefore approve the WSPF as submitted. Using the methods approved at AMWTP, the AMWTP may enter the data into the certification and shipping modules of the WIPP Waste Information System.

If you have any questions, please contact me at (505) 234-7545 or (505) 706-0055.

Sincerely,

D. T. Bignell, Manager
Regulatory Compliance

DTB:rdr

P.O. Box 2078 • Carlsbad, New Mexico USA 88221-2078
Phone: (505) 234-7200 • Fax: (505) 234-7083

cc: F. Marcinowski, DOE HQ *ED
A. Holland, CBFO ED
R. McCallister, CBFO ED
M. Navarrete, CBFO ED
K. Watson, CBFO ED
G. Girard, DOE-ID ED
J. Ziemianski, DOE-ID ED
B. Edgerton, DOE-ID ED
T. Jenkins, DOE-ID ED
C. Maggart, DOE-ID ED
J. Medema, DOE-ID ED
J. Wells, DOE-ID ED
E. Schweinsberg, BNG ED
S. Carpenter, AMWTP ED
R. Chatfield, WTS ED
D. Hofer, WTS ED
G. Johnson, WTS ED
D Kump, WTS ED
D. Speed, WTS ED
D. Standiford, WTS ED
M. Strum, WTS ED
R. Chavez, WRES ED
R. Kehrman, WRES ED
R. Reeves, WRES ED
V. Waldram, LANL ED
P. Gilbert, LANL ED
CBFO M&RC

*ED denotes Electronic Distribution

AMWTP Advanced Mixed Waste Treatment Project	Waste Stream Profile Form HWN Assignment Worksheet	AMWTP Form-1195 Rev. 2 Effective Date: 11/30/04 MP-TRUW-8.14 Page 1 of 4

WASTE STREAM PROFILE FORM

Waste Stream Profile Number: BN004, Rev. 0

Generator site name: Advanced Mixed Waste Treatment Project

Technical contact: Eric Schweinsberg

Generator site EPA ID: ID4890008952

Technical contact phone number: (208) 557-6425

Date of Audit report approval by NMED: 12/23/03, 7/03/04, 10/25/05

Title, version number, and date of documents used for WAP certification:

Certification Plan for INEEL Contact-Handled (CH-TRU) Transuranic Waste, MP-TRUW-8.1, Rev. 9, 6/15/05
Contact-Handled Transuranic Waste Authorized Methods for Payload Control (CH-TRAMPAC), MP-TRUW-8.3, Rev. 4, 7/13/05
Quality Assurance Project Plan (QAPjP), MP-TRUW-8.2, Rev. 5, 6/15/05

Did your facility generate this waste? ☐Yes ☒No If no, provide the name and EPA ID of the original generator:
Rocky Flats Environmental Technology Site, CO7890010526

Waste Stream Information[1]

WIPP ID: IN-W157

Summary Category Group: S3000

Waste Matrix Code Group: Solidified Inorganics

Waste Stream Name: Special Setups Waste

Description from the WTWBIR: This waste, generated at Rocky Flats Plant, consists of liquids absorbed on a cement mixture. The liquid wastes were not compatible with the aqueous treatment processes and were handled separately due to their plutonium complexing nature.

Defense TRU Waste: (Ref. 1) ☒Yes ☐No Check One: ☒CH ☐RH

Number of SWBs: 0 Number of Drums: 2,102 (55 gallon drums) Number of Canisters: 0

Batch Data report numbers supporting this waste stream characterization: See Characterization Information Summary, Table 5

List applicable EPA Hazardous Waste Codes:[2] D006, D007, D008, D011, D029, F001, F002, F005, F006, F007 and F009

Applicable TRUCON Content Codes: ID111/ID211

Acceptable Knowledge Information[1]

[For the following, enter supporting documentation used (i.e., references and dates)]

Required Program Information

Map of site: See Reference List, No. 1, Section 3, Figure 3-1; No. 2

Facility mission description: See Reference List No. 1, Section 3.1, and No. 3

Description of operations that generate waste: See Reference List, No. 1 Sections 24, and No. 9

Waste identification/categorization schemes: See Reference List, No. 4

Types and quantities of waste generated: See Reference List, No. 1 Section 24, Nos. 3, 5, and 6

Correlation of waste streams generated from the same building and process, as appropriate: See Reference List, No. 1

Waste certification procedures: See Reference List, Nos. 7 and No. 8

Required Waste Stream Information

Area(s) and building(s) from which the waste stream was generated: See Reference List, Nos. 1 Section 24 and 9

Waste stream volume and time period of generation: See Reference List, No.s. 1 Section 24 and 9

Waste generating process description for each building: See Reference List, Nos. 1 Section 24 and 9

Process flow diagrams: See Reference List, No. 9 Section 1.4.2 for list of references for the process flow diagrams

Material inputs or other information identifying chemical/radionuclide content and physical waste form: See Reference List, No. 9

Which Defense Activity generated the waste: (check one)

- ☒ Weapons activities including defense inertial confinement fusion
- ☐ Naval Reactors development
- ☐ Verification and control technology
- ☐ Defense research and development
- ☐ Defense nuclear waste and material by products management
- ☐ Defense nuclear material production
- ☐ Defense nuclear waste and materials security and safeguards and security investigations

Supplemental Documentation See Reference List, No. 1

Process design documents: See Reference List, No. 1
Standard operating procedures: See Reference List, No. 1
Safety Analysis Reports: See Reference List, No. 1
Waste packaging logs: See Reference List, No. 1
Test plans/research project reports: See Reference List, No. 1
Site databases: See Reference List, No. 1
Information from site personnel: See Reference List, No. 1
Standard industry documents: See Reference List, No. 1
Previous analytical data: See Reference List, No. 1
Material safety data sheets: See Reference List, No. 1
Sampling and analysis data from comparable/surrogate Waste: See Reference List, No. 1
Laboratory notebooks: See Reference List, No. 1

Sampling and Analysis Information

For the following, when applicable, enter procedure title(s), number(s) and date(s))

Radiography: See Reference List, No. 10
Visual Examination: See Reference List, No. 11

Headspace Gas Analysis

VOCs: See Reference List, Nos. 12 and 21
Flammable: See Reference List, Nos. 12 and 21
Other gases (specify): N/A

Homogeneous Solids/Soils/Gravel Sample Analysis *(See Reference List for Dates)*

Total metals: See Reference List, Nos. 13, 14, 15, and 20
PCBs: N/A
VOCs: See Reference List, Nos. 16 and 20
Nonhalogenated VOCs: See Reference List, Nos. 17 and 20
Semi-VOCs: See Reference List, Nos. 18, 19 and 20
Other (specify): N/A

Waste Stream Profile Form Certification:

I hereby certify that I have reviewed the information in this Waste Stream Profile Form, and it is complete and accurate to the best of my knowledge. I understand that this information will be made available to regulatory agencies and that there are significant penalties for submitting false information, including the possibility of fines and imprisonment for knowing violations.

RS Eckenbaum for EPS per telefax 12/28/05 — Eric P Schweitzberg — 12/28/05

Signature of Site Project Manager — Printed Name and Title — Date

NOTE: (1) Use back of sheet or continuation sheets, if required.
(2) If radiography, visual examination, headspace gas analysis, and/or homogeneous solids/soils/gravel sample analysis were used to determine EPA Hazardous Waste Codes, attach signed Characterization Information Summary documenting this determination.

Waste Stream Profile Continuation Sheet

Reference List

1. Acceptable Knowledge Document for INEEL Stored Transuranic Waste – Rocky Flats Plant Waste, INEL-96/0280, Rev. 3, February 28, 2003. (P368A)
2. Site Plan of the Advanced Mixed Waste Treatment Facility, DWG-5232-52-0101, Rev. 0, April 1999.
3. AMWTP TRU Waste Management Acceptable Knowledge Elements, AMWTP-RPT-TRUW-06, Rev. 4, August 2005.
4. AMWTP Waste Stream Designations, AMWTP-RPT-TRUW-12, Rev. 5, November 2005.
5. Estimated Earthen and Geofabric Covered TRU Waste Inventory in the TSA at Radioactive Waste Management Complex (RWMC), RWMC EDF-837, August 1995.
6. Container Inventory Report for WMF-629 thru WMF-633 (TRIPS query), December 2002.
7. Certification Plan for INEEL Contact-Handled Transuranic Waste, MP-TRUW-8.1, Rev. 9, June 2005.
8. Advanced Mixed Waste Treatment Project TRU Waste Certification, MP-TRUW-8.5, Rev. 16, December 2005.
9. Acceptable Knowledge Summary for Special Setups Waste, AMWTP-RPT-TRUW-59, Rev. 0, December 2005.
10. Real Time Radiography Operations, INST-OI-12, Rev. 23, August 2005.
11. Visual Examination Operating Procedures and Data Reporting, INST-OI-34, Rev. 12, October 2005.
12. Drum Vent/Headspace Gas Sample Operations, INST-OI-13, Rev. 20, March 2005.
13. Microwave Assisted Digestion of Homogeneous Solids, Soil and Gravel, INEEL Analytical Laboratories Department, Analytical Chemistry Methods Manual, ACMM-8909, Rev. 9, January 2005
14. Determination of Mercury by CVAA for TRU Waste Characterization, INEEL Analytical Laboratories Department, Analytical Chemistry Methods Manual, ACNMM-2810, Rev. 3, January 2005
15. Determination of Metals by ICP-AES for TRU Waste Characterization, INEEL Analytical Laboratories Department, Analytical Chemistry Methods Manual, ACNMM-2901, Rev. 3, January 2005
16. Volatile Organic Compounds by Gas Chromatography/Mass Spectrometry, INEEL Analytical Laboratories Department, Analytical Chemistry Methods Manual, ACNMM-9260, Rev. 14, December 2005
17. Determination of Nonhalogenated Volatile Organics by Gas Chromatography, INEEL Analytical Laboratories Department, Analytical Chemistry Methods Manual, ACNMM-9441, Rev. 11, December 2004
18. Semi-Volatile Organic Compounds by Gas Chromatography/Mass Spectrometry, INEEL Analytical Laboratories Department, Analytical Chemistry Methods Manual, ACNMM-9270, Rev. 8, January 2005

Waste Stream Profile Continuation Sheet

19. Sample Preparation for Semi-Volatile Organic Compounds and Polychlorinated Biphenyls, INEEL Analytical Laboratories Department, Analytical Chemistry Methods Manual, ACNMM-9500, Rev. 11, December 2004

20. RCRA Statistical Sampling, MP-TRUW-8.25, Rev. 11, October 2005.

21. HGAS Sampling and Analysis Operations, INST-OI-43, Rev. 12, September 2005.

22. Waste Isolation Pilot Plant Hazardous Waste Facility Permit, New Mexico Environment Department, NM4890139088-TSDF, October 2005.

23. Contact-Handled Transuranic Waste Acceptance Criteria for the Waste Isolation Pilot Plant, U. S. Department of Energy, Carlsbad Field Office, Waste Isolation Pilot Plant, DOE/WIPP 02-3122, Rev. 3, April 2005.

24. AMWTP Memorandum, Sampling Plan for BN004 – Lot 1-SPC-069-2005, October 2005.

25. Drum Coring Operations, INST-OI-16, Rev. 20, October 2005.

Characterization Information Summary

Introduction

Advanced Mixed Waste Treatment Project (AMWTP) has compiled Acceptable Knowledge (AK) information for waste stream BN004 as required by the Waste Isolation Pilot Plant (WIPP) Waste Analysis Plan (WAP) and the Contact-Handled Transuranic Waste Acceptance Criteria (CH-WAC).[22, 23] In addition, AMWTP has conducted confirmatory testing and analysis using real time radiography (RTR) or visual examination (VE), headspace gas sampling and analysis, solid sampling and analysis, and radioassay.

This Characterization Information Summary (CIS) presents the analytical data from five containers for the total solids analysis and 18 other containers for headspace gas analysis. The headspace analytical data associated with the five containers that were solid sampled were not included in the headspace gas analysis. These data meet the necessary requirements for confirmatory characterization. Headspace gas analysis from the 18 containers is presented in Tables 1A and 1B. Solid sampling data from five containers is summarized in Tables 2, 3A, 3B, 4A, and 4B. Table 5 lists the correlation of container numbers to characterization data packages. Table 6 presents the RTR/VE summary of prohibited items and AK confirmation. Table 7 presents the correlation between the container number, the headspace gas sample number, and the solid sample numbers.

Solid sampling was performed on randomly selected containers obtained from BN004–Lot 1, Special Setups Waste from the Rocky Flats Plant. BN004–Lot 1 consists of 870 drums of mixed-transuranic waste.

Data Results

The data in this CIS are obtained from the required ("n") samples from solid sampling and analysis. The data is used to determine the mean concentrations and the 90% upper confidence level (UCL_{90}) for toxicity characteristic compounds and to assign and/or confirm hazardous waste numbers (HWNs) for the BN004 waste stream.

The statistical evaluation of the analytical data collected for BN004-Lot 1 is presented in Tables 1A, 2A, 3A, and 4A. Table 5 lists the correlation of container number to solids analysis data packages.

HWNs assigned by AK are applied to the waste stream even if headspace gas analytical results and solid sampling analytical results for the assigned compounds are not above the program required quantitation limit (PRQL). There were no solids sampling UCL_{90} results above the PRQLs for toxicity characteristic metals. The solid sampling results and HSG sampling results for VOCs reflected the UCL_{90} for methanol above the PRQL. However, the waste stream was determined not to be ignitable; therefore, the D001 and F003 HWNs were not applied. There were no other VOC analytes with UCL_{90} values above the PRQL for either the HSG or solid sampling results. AK data indicate that there are no semi-volatile organic compounds (SVOCs)

Characterization Information Summary

present in the waste, and there were no solid sampling results above the PRQL for SVOCs. The HWN assignment for this waste stream includes:

- Toxicity characteristic metals – D006 (cadmium), D007 (chromium), D008 (lead), and D011 (silver)
- Toxicity characteristic organics – D029 (1,1-dichloroethylene)
- Listed codes for organics – F001 and F002 (1,1,1- trichloroethane, trichloroethylene, tetrachloroethylene, and 1,1,2-trichloro-1,2,2-trifluoroethane), F001 (carbon tetrachloride), F002 (methylene chloride), F005 (benzene, methyl ethyl ketone and toluene)
- Listed codes from electroplating operations – F006, F007, and F009 (spent cyanide electroplating wastes)

Solid sampling results and headspace gas results confirm AK. No additional EPA HWNs are required. One constituent (ethanol, CAS No. 64-17-05) was detected as VOC tentatively identified compounds (TICs) in over 25 percent of the headspace confirmatory samples collected; however, this constituent is not listed in 40 CFR 261, Appendix VIII and thus will not be added as a target analyte for this waste stream.

AMWTP Advanced Mixed Waste Treatment Project	**Reconciliation with Data Quality Objectives**	AMWTP Form-1597 Rev. 0 MP-TRUW-8.11 Effective Date: 12/06/04 Page 1 of 1

I certify by signature (below) that sufficient data have been collected to determine the following program-required waste parameters:

WSPF# BN004-Lot 1 Reconciliation

Data Quality Objective	Yes	No	N/A	Comment
1. Have all containers in the lot been assigned an appropriate Waste Matrix Code?	✓			
2. Have waste material parameter weights been established for each container in the lot?	✓			
3. Does each container of waste contain TRU radioactive waste?	✓			
4. Have mean concentrations, UCL_{90} values for the mean concentration, standard deviations, and the number of samples collected for each VOC in the headspace gas of waste containers in the waste stream lot been evaluated against the constituent hazardous waste number assignments?	✓			
5. Has the potential flammability of TRU waste headspace gases been evaluated for the lot?	✓			Containers will be evaluated on an individual basis using headspace gas analysis and WWIS.
6. Have mean concentrations, UCL_{90} for the mean concentrations, standard deviations, and number of samples collected for VOCs, SVOCs, and metals in the waste stream (if applicable) lot been evaluated against the constituent hazardous waste number assignments?	✓			
7. Does the waste stream exhibit a toxicity characteristic (TC) under 40 CFR Part 261, Subpart C?	✓			
8. Can the waste stream be classified as hazardous or nonhazardous at the 90-percent confidence level?	✓			
9. Have a sufficient number of waste containers been visually examined (as a QC check on radiography) to determine with a reasonable level of certainty that the UCL_{90} for the miscertification rate is less than 14 percent for the summary category group?	✓			
10. Was an appropriate packaging configuration and Drum Age Criteria (DAC) applied and documented in the headspace gas sampling documentation and was the drum age criteria met prior to sampling?	✓			
11. Have all TICs been appropriately identified and reported in accordance with the requirements of Section B3-1 for the lot?	✓			
12. Have the overall completeness, comparability, and representativeness QAOs been met for each of the analytical and testing procedures as specified in Sections B3-2 through B3-9 for the lot?	✓			
13. Have the PRQLs for all analyses been met for the lot?	✓			

12/28/05

Signature of Site Project Manager (for EPS per telecon)

Eric P Schweinsberg
Printed Name

12/28/05
Date

AMWTP Advanced Mixed Waste Treatment Project	**Characterization Information Summary Report**	AMWTP Form-1598 Rev. 0 MP-TRUW-8.14 Effective Date: 11/30/04 Page 1 of 17

WSPF Number: BN004, Rev. 0, (Lot 1)

SQAO [signature] Date: 12/28/05

SQAO signature indicates that the information presented in this package is consistent with analytical batch reports.

SPM [signature] for EPS Date: 12/28/05

SPM signature indicates concurrence with all information presented in this report.

telecon

Characterization Description:

Drum selection and quantity of drums for Totals Analysis, Reduced Headspace Gas Sampling, and/or Newly Generated Soils/Gravel have been evaluated and meet the requirements established in MP-TRUW-8.25, *RCRA Statistical Sampling*.[20]

Y ☒ N☐ NA ☐

L.T. Eschenbaum for EPS per telecon — 12/28/05

SPM Signature — Date

For "N" or "NA" provide rationale.

Table 1A. Headspace Gas Summary Data. BN004-Lot 1

ANALYTE	Number of Samples	# of Samples above MDL [a]	Trans-formation Used [c]	Maxi-mum (ppmv)	Mean (ppmv)	Standard Deviation (ppmv)	Upper 90 % confidence limit (ppmv)	Trans-formed PRQL	PRQL (ppmv)	EPA Code
1,1-Dichloroethane [c]	18	2	Natural log	2.14	0.35	0.81	0.60	2.30	10	N/A
1,1-Dichloroethylene [c]	18	4	Natural log	2.48	0.87	0.68	1.08	2.30	10	D029 [d]
1,1,1-Trichloroethane [c]	18	9	Natural log	4.14	1.65	1.53	2.13	2.30	10	F001, F002 [d]
1,1,2-Trichloro-1,2,2-trifluoroethane	18	0	None	2.35	1.72	0.46	[b]	-	10	F001, F002 [d]
1,1,2,2-Tetrachloroethane	18	0	None	2.35	1.18	0.85	[b]	-	10	N/A
1,2-Dichloroethane	18	0	None	2.35	1.35	0.73	[b]	-	10	N/A
1,2,4-Trimethylbenzene [f]	18	0	None	2.35	1.18	0.85	[b]	-	10	N/A
1,3,5-Trimethylbenzene [f]	18	0	None	2.30	1.20	0.80	[b]	-	10	N/A
Acetone	18	0	None	25.50	12.83	9.22	[b]	-	100	N/A
Benzene	18	2	None	5.00	1.57	1.29	1.97	-	10	F005 [d]
Bromoform	18	0	None	2.00	1.10	0.65	[b]	-	10	N/A
Butanol	18	0	None	27.50	24.83	1.94	[b]	-	100	N/A
Carbon disulfide [f]	18	0	None	2.50	1.70	0.58	[b]	-	10	N/A
Carbon tetrachloride [c]	18	1	Natural log	2.83	0.42	0.75	0.66	2.30	10	F001 [d]
Chlorobenzene	18	0	None	2.10	1.17	0.68	[b]	-	10	N/A
Chloroform	18	0	None	2.30	1.20	0.80	[b]	-	10	N/A
Chloromethane [g]	18	0	None	2.60	1.70	0.65	[b]	-	10	N/A
cis-1,2-Dichloroethylene	18	0	None	2.25	1.25	0.73	[b]	-	10	N/A
Cyclohexane [f]	18	1	None	3.50	1.29	0.94	1.59	-	10	N/A
Ethyl benzene [c]	18	2	Natural log	7.44	0.92	2.42	1.68	2.30	10	N/A
Ethyl ether	18	0	None	2.30	1.60	0.51	[b]	-	10	N/A
M&p-Xylene [c]	18	2	Natural log	8.46	0.91	2.78	1.78	2.30	10	N/A
Methanol [c]	18	17	Natural log	9.47	7.50	1.59	8.00	4.61	100	N/A [h]
Methyl ethyl ketone	18	0	None	24.50	13.50	8.00	[b]	-	100	F005 [d]
Methyl isobutyl ketone	18	0	None	19.50	16.50	2.18	[b]	-	100	N/A
Methylene chloride	18	0	None	2.30	1.30	0.73	[b]	-	10	F002 [d]
o-Xylene [c]	18	2	Natural log	7.00	0.85	2.19	1.54	2.30	10	N/A
Tetrachloroethylene	18	0	None	1.85	1.05	0.58	[b]	-	10	F001, F002 [d]
Toluene [c]	18	8	Natural log	3.40	0.87	1.02	1.19	2.30	10	F005 [d]
trans-1,2-Dichloroethylene	18	0	None	2.25	1.22	0.75	[b]	-	10	N/A
Trichloroethylene [c]	18	6	Natural log	2.20	0.57	0.68	0.78	2.30	10	F001, F002 [d]

a. When a measurement is reported as below detection, one-half the analysis method detection limit (MDL) is used. Note that the MDL for a given analyte may vary from sample to sample.

b. The mean and standard deviation presented are the mean and standard deviation of the MDL after dividing by 2. All measurements are below detection; therefore, the upper 90% confidence limit is not calculated.

c. The maximum, mean, standard deviation, UCL_{90}, and PRQL are presented as transformed values

d. The HWNs for these constituents are assigned based on AK. HWNs assigned by AK are applied to the waste stream even if headspace gas analytical results for the assigned compounds are not above the PRQL.

e. The Shapiro-Wilk test for normality was applied to data prior to determination of the maximum, mean, SD, UCL_{95}, and PRQL.[20]

f. Cyclohexane (CAS No. 110-82-7), 1,2,4-trimethylbenzene (CAS No. 95-63-6), 1,3,5-trimethylbenzene (CAS No. 108-67-8) and carbon disulfide (CAS No. 75-15-0) are not target analytes for this waste stream but will be reported because they have been added as target compounds on the Agilent system at the AMWTP [reference Section 2.2 of the AK Summary for Non-special Source Metal Debris Waste (BN296)].[9]

g. Chloromethane (CAS No. 74-87-3) is not a target analyte for this waste stream but will be reported because it has been added as a target compound for other waste streams at AMWTP.

h. Although the UCL_{95} level is above the PRQL for methanol, the waste is not ignitable; therefore, no HWN was applied.

Did the Data verify the Acceptable Knowledge? Yes X No_____

If no, describe the basis for assigning the EPA Hazardous Waste Code.

Statistics performed by: _____ Date: 12/28/05

Signature

Table 1B. Headspace Gas Summary Data – tentatively identified compounds. BN004-Lot 1

Tentatively Identified Compound	Maximum Observed Estimated Concentrations (ppmv)	# Samples Containing TIC	# Containers in Lot	% Detected	# Containers in Waste Stream to Date	% Detected
Ethanol[a]	53	5	18	27.8%	18	27.8%

a. The CAS No. for ethanol is 64-17-05. This is not a 40 CFR 261, Appendix VIII, listed analyte.

Did the data verify the Acceptable Knowledge? YES: X NO: _____

If no, describe the basis for assigning the EPA Hazardous Waste Code. N/A

Verification of % Detected Calculation: L Bakenka Date: 12/28/05
Signature

Table 2. Metals Summary Data. BN004-Lot 1

ANALYTE	# Samples	# Samples above MDL [a, h]	Trans-formation Used [g]	Maximum (mg/kg)	Mean (mg/kg)	SD (mg/kg)	UCL_{90} (mg/kg)	Trans-formed PRQL	PRQL [d] (mg/kg)	EPA Code [g]
Arsenic	5	5	None	6.00	4.92	1.00	5.61	–	100	N/A
Barium	5	5	None	260	230	33.9	253	–	2000	N/A
Cadmium [b]	5	5	Natural log	-0.073	-0.463	0.265	-0.281	3.00	20	D006 [c]
Chromium [b]	5	5	Natural log	4.22	3.43	0.470	3.75	4.61	100	D007 [c]
Lead	5	5	None	36.0	17.9	12.5	26.5	–	100	D008 [c]
Mercury	5	0	None	0.005	0.005	0.000	[i]	–	4	N/A
Selenium	5	3	None	0.980	0.564	0.283	0.758	–	20	N/A
Silver [b]	5	3	Natural log	2.64	0.080	2.02	1.46	4.61	100	D011 [f]
Antimony [b]	5	5	Natural log	0.182	-0.060	0.178	0.062	4.61	100	N/A [f]
Beryllium [b]	5	4	Natural log	0.095	-1.19	1.18	-0.384	4.61	100	N/A [f]
Nickel	5	5	None	28.0	22.6	5.32	26.2	–	100	N/A [f]
Thallium	5	2	None	1.90	0.959	0.655	1.41	–	100	N/A [f]
Vanadium [b]	5	5	Natural log	4.79	4.08	0.412	4.36	4.61	100	N/A [f]
Zinc	5	5	None	130	84.8	39.7	112	–	100	N/A [f]

a. When a measurement is reported as below detection, one-half the analysis MDL is used. Note that the MDL for a given analyte may vary from sample to sample.
b. The maximum, mean, standard deviation (SD), UCL_{90}, and PRQL are presented as transformed values.
c. These HWNs, assigned by AK, are applied to the waste stream even though analytical results for the assigned compounds are not above the PRQL.
d. To determine whether a HWN should be added, the UCL_{90} is compared against the appropriate limit. For toxicity characteristic constituents that do not have a PRQL in the permit, the TC limit (mg/L) multiplied by 20 is used to calculate the RTL. RTLs correspond to the analyte PRQL for analytes that are not characteristic hazardous waste constituents.
e. The Shapiro-Wilk test for normality was applied to data prior to determination of the maximum, mean, SD, UCL_{90}, and PRQL.
f. There are no associated toxicity characteristic HWNs with these analytes.
g. Spent stripping, cleaning, and plating operations in which cyanides and chromium were used are included in this waste stream; therefore, EPA HWNs F006, F007 and F009 are applied based on AK.
h. Distribution testing is not performed on 2 or fewer applicable samples; therefore, a normal distribution is assumed.
i. All measurement are below detection; therefore, the UCL_{90} will not be calculated.

Did the data verify the Acceptable Knowledge? Yes X No

If no, describe the basis for assigning the EPA Hazardous Waste Code: N/A

Statistics performed by: Tamara L. Sellers Date: 12/28/05
Signature

Table 3A. Total VOC Summary Data. BN004-Lot 1

ANALYTE	# Samples	# Samples above MDL [a, f]	Trans-formation Used [e]	Maxi-mum (mg/kg)	Mean (mg/kg)	SD (mg/kg)	UCL_{90} (mg/kg)	Trans-formed PRQL	PRQL [c] (mg/kg)	EPA Code
1,1-Dichloroethylene	5	0	None	0.185	0.178	0.007	[b]	-	10	D029 [d]
Trans-1,2-dichloroethylene	5	0	None	0.095	0.088	0.004	[b]	-	10	N/A
1,1,1-Trichloroethane	5	0	None	0.095	0.088	0.004	[b]	-	10	F001/F002 [d]
1,1,2,2-Tetrachloroethane	5	0	None	0.185	0.178	0.007	[b]	-	10	N/A
1,1,2-Trichloro-1,2,2-trifluoroethane	5	0	None	0.095	0.088	0.004	[b]	-	10	F001/F002 [d]
1,1,2-Trichloroethane	5	0	None	0.095	0.088	0.004	[b]	-	10	N/A
1,2-Dichloroethane	5	0	None	0.185	0.178	0.007	[b]	-	10	N/A
Acetone	5	0	None	1.75	1.68	0.087	[b]	-	100	N/A
Benzene	5	0	None	0.185	0.178	0.007	[b]	-	10	F005 [d]
Bromoform	5	0	None	0.095	0.088	0.004	[b]	-	10	N/A
Butanol	5	0	None	1.75	1.68	0.087	[b]	-	100	N/A
Carbon disulfide	5	0	None	0.095	0.088	0.004	[b]	-	10	N/A
Carbon tetrachloride	5	0	None	0.095	0.088	0.004	[b]	-	10	F001 [d]
Chlorobenzene	5	0	None	0.095	0.088	0.004	[b]	-	10	N/A
Chloroform	5	0	None	0.095	0.088	0.004	[b]	-	10	N/A
Ethyl benzene	5	0	None	0.095	0.088	0.004	[b]	-	10	N/A
Ethyl ether	5	0	None	1.75	1.68	0.087	[b]	-	100	N/A
Isobutanol	5	0	None	1.15	1.11	0.048	[b]	-	100	N/A
Methanol	5	5	None	6700	3161	2690	5005	-	100	N/A [g]
Methyl ethyl ketone	5	0	None	1.75	1.68	0.087	[b]	-	100	F005 [d]
Methylene chloride	5	0	None	0.185	0.178	0.007	[b]	-	10	F002 [d]
Pyridine	5	0	None	1.75	1.68	0.087	[b]	-	100	N/A
o-Xylene	5	0	None	0.095	0.088	0.004	[b]	-	10	N/A
m&p-Xylene	5	0	None	0.185	0.178	0.007	[b]	-	10	N/A
Tetrachloroethylene	5	0	None	0.185	0.178	0.007	[b]	-	10	F001/F002 [d]
Toluene	5	0	None	0.095	0.088	0.004	[b]	-	10	F005 [d]
Trichloroethylene	5	0	None	0.095	0.088	0.004	[b]	-	10	F001/F002 [d]
Trichlorofluoromethane	5	0	None	0.095	0.088	0.004	[b]	-	10	N/A
Vinyl chloride	5	0	None	0.185	0.178	0.007	[b]	-	4	N/A

a. When a measurement is reported as below detection, one-half the analysis MDL is used. Note that the MDL for a given analyte may vary from sample to sample.
b. All measurement are below detection; therefore, the UCL_{90} will not be calculated.
c. To determine whether a HWN should be added, the UCL_{90} is compared against the appropriate limit. For toxicity characteristic (TC) wastes, the TC limit expressed as the RTL is used if compounds do not have a PRQL in the permit. For listed wastes, the PRQL is used.
d. These HWNs, assigned by AK, are applied to the waste stream even though analytical results for the assigned compounds are not above the PRQL.
e. The Shapiro-Wilk test for normality was applied to data prior to determination of the maximum, mean, SD, UCL_{90}, and PRQL.
f. Distribution testing is not performed on 2 or fewer applicable samples; therefore, a normal distribution is assumed.
g. Although the UCL_{90} was above the PRQL, the waste is not ignitable; therefore, HWN F003 was not applied.

Did the data verify the Acceptable Knowledge? Yes X No

If no, describe the basis for assigning the EPA Hazardous Waste Codes: N/A

Statistics performed by: Tamara D Sbeus Date: 12/28/05
Signature

Table 3B. Total VOC Summary Data – tentatively identified compounds, BN004-Lot 1.

Tentatively Identified Compound	Maximum Observed Estimated Concentrations (ppmv)	# Samples Containing TIC	# Containers in Lot	% Detected	# Containers in Waste Stream to Date	% Detected
None	N/A	N/A	N/A	N/A	N/A	N/A

Did the data verify the Acceptable Knowledge? Yes X No_____

If no, describe the basis for assigning the EPA Hazardous Waste Codes: N/A

Verification of % Detected Calculation N/A Date: _____
Signature

AMWTP Advanced Mixed Waste Treatment Project

Characterization Information Summary Report

Table 4A. Total SVOC Summary Data. BN004-Lot 1.

Analyte	# Samples	# Samples Above MDL [a, c]	Trans-formation Used [d]	Maxi-mum (mg/kg)	Mean (mg/kg)	SD (mg/kg)	UCL_{90} (mg/kg)	Trans-formed PRQL	PRQL (mg/kg)	EPA code
1,2-Dichlorobenzene (o-Dichlorobenzene)	5	0	None	0.100	0.100	0.000	[b]	-	40	N/A
1,4-Dichlorobenzene (p-Dichlorobenzene)	5	0	None	0.100	0.100	0.000	[b]	-	40	N/A
2,4-Dinitrophenol	5	0	None	0.200	0.200	0.000	[b]	-	40	N/A
2,4-Dinitrotoluene	5	0	None	0.100	0.100	0.000	[b]	-	2.6	N/A
bis(2-Ethylhexyl)phthalate [e]	5	0	None	0.200	0.200	0.000	[b]	-	40	N/A
Fluoranthene [f]	5	0	None	0.100	0.100	0.000	[b]	-	40	N/A
Hexachlorobenzene	5	0	None	0.100	0.100	0.000	[b]	-	2.6	N/A
Hexachloroethane	5	0	None	0.100	0.100	0.000	[b]	-	40	N/A
2-Methylphenol (o-Cresol)	5	0	None	0.100	0.100	0.000	[b]	-	40	N/A
3- & 4-Methylphenol (m- & p-Cresol)	5	0	None	0.200	0.200	0.000	[b]	-	40	N/A
Nitrobenzene	5	0	None	0.100	0.100	0.000	[b]	-	40	N/A
Pentachlorophenol	5	0	None	0.100	0.100	0.000	[b]	-	40	N/A
Phenol [g]	5	0	None	0.355	0.151	0.114	[b]	-	40	N/A

a. When a measurement is reported as below detection, one-half the analysis MDL is used. Note that the MDL for a given analyte may vary from sample to sample.

b. All measurement are below detection; therefore, the UCL_{90} will not be calculated.

c. Distribution testing is not performed on 2 or fewer applicable samples; therefore, a normal distribution is assumed.

d. The Shapiro-Wilk test for normality was applied to data prior to determination of the maximum, mean, SD, UCL_{90}, and PRQL.

e. Bis(2-Ethylhexyl) phthalate was detected as a TIC in BNINW216-Lot 1 in over 25% of the samples analyzed and was added to the target analyte list as required by the WAP. Bis(2-Ethylhexyl) phthalate is not a target analyte for the BN004 waste stream, but the data will be reported for this analyte. The CAS # for bis(2-Ethylhexyl) phthalate is 117-81-7.

f. Fluoranthene was detected as a TIC in BNINW216-Lot 1 in over 25% of the samples analyzed and was added to the target analyte list as required by the WAP. Fluoranthene is not a target analyte for the BN004 waste stream, but the data will be reported for this analyte. The CAS # for fluoranthene is 206-44-0.

g. Phenol was detected as a TIC in BNINW218-Lot 2 in over 25% of the samples analyzed and was added to the laboratory target analyte list as required by the WAP. Phenol is not a target analyte for the BN004 waste stream, but the data will be reported for this analyte. The CAS # for phenol is 108-95-2.

Did the data verify the Acceptable Knowledge? Yes X No_____

If no, describe the basis for assigning the EPA Hazardous Waste Code: N/A

Statistics performed by: Tamara E Sblues Date: 12/28/05
Signature

Table 4B. Total SVOC Summary Data – tentatively identified compounds. BN004-Lot 1.

Tentatively Identified Compound	Maximum Observed Estimated Concentrations (ppmv)	# Samples Containing TIC	# Containers in Lot	% Detected	# Containers in Waste Stream to Date	% Detected
None	N/A	N/A	N/A	N/A	N/A	N/A

Did the data verify the Acceptable Knowledge? Yes X No

If no, describe the basis for assigning the EPA Hazardous Waste Code: N/A

Verification of % Detected Calculation N/A Date:

Signature

Table 5. Correlation of Container Identification Numbers to Data Package. BN004-Lot 1.

Container Number	Headspace Gas Data Package	RTR Data Package	RA Data Package	Visual Examination Data Package	Solid Sampling Data Package	Solid Analysis Data Packages
10001234	HS105_00151	RTR03-00072	ASY03-00348	N/A	N/A	N/A
10001239	HS105_00151	RTR03-00072	ASY03-00347	N/A	N/A	N/A
10001240	HS105_00151	RTR03-00072	ASY03-00347	N/A	N/A	N/A
10001318	HS105_00151	RTR03-00073	ASY03-00347	N/A	N/A	N/A
10001331	HS105_00151	RTR03-00073	ASY03-00347	N/A	N/A	N/A
10001355	HS105_00151 [a]	RTR03-00043	ASY03-00353	N/A	SSC05-00321	ALD05035S ALD05041V ALD05029N ALD05042M
10001387	HS205_00322 [a]	RTR03-00041	ASY03-00264	N/A	SSC05-00321	ALD05035S ALD05041V ALD05029N ALD05042M
10016677	HS105_00151	RTR04-00221	ASY04-00480	N/A	N/A	N/A
10016686	HS105_00151	RTR04-00226	ASY04-00483	N/A	N/A	N/A
10016706	HS505_00050	RTR04-00228	ASY04-00494	N/A	N/A	N/A
10016711	HS105_00151	RTR04-00182	ASY04-00414	N/A	N/A	N/A
10016719	HS105_00151	RTR04-00184	ASY04-00414	N/A	N/A	N/A
10016722	HS105_00151	RTR04-00184	ASY04-00415	N/A	N/A	N/A
10016825	HS505_00045	RTR04-00198	ASY04-00469	N/A	N/A	N/A
10016828	HS505_00045	RTR04-00197	ASY04-00461	N/A	N/A	N/A
10016843	HS505_00050	RTR04-00200	ASY04-00463	N/A	N/A	N/A
10016860	HS505_00050	RTR04-00201	ASY04-00463	N/A	N/A	N/A
10017109	HS505_00050	RTR04-00218	ASY04-00473	N/A	N/A	N/A
10017168	HS105_00151	RTR04-00219	ASY04-00474	N/A	N/A	N/A
10017169	HS205_00322 [a]	RTR04-00219	ASY04-00474	N/A	SSC05-00321	ALD05035S ALD05041V ALD05029N ALD05042M
10017184	HS105_00151	RTR04-00214	ASY04-00480	N/A	N/A	N/A
10019885	HS205_00322 [a]	RTR04-00322	ASY04-00690	N/A	SSC05-00321	ALD05035S ALD05041V ALD05029N ALD05042M
10048273	HS105_00151 [a]	RTR05-04066	ASY05-04785	N/A	SSC05-00321	ALD05035S ALD05041V ALD05029N ALD05042M

NOTE: *For headspace gas sampling data packages, the HSG prefix represents use of the DVS system and the HS prefix represents use of the HGAS system.*

a. Headspace gas data from cored drums were not included in the statistics for headspace gas results. These containers are not included in the BN004 reconciliation Lot 1.

Table 6. RTR/VE Summary of Prohibited Items and AK Confirmation. BN004-Lot 1 [a]

Container Number	RTR Prohibited Items	Visual Examination Prohibited Items [c]	AK Confirmation [b]
10001234	None	N/A	Complete
10001239	None	N/A	Complete
10001240	None	N/A	Complete
10001318	None	N/A	Complete
10001331	None	N/A	Complete
10001355	None	N/A	Complete
10001387	None	N/A	Complete
10016677	None	N/A	Complete
10016686	None	N/A	Complete
10016706	None	N/A	Complete
10016711	None	N/A	Complete
10016719	None	N/A	Complete
10016722	None	N/A	Complete
10016825	None	N/A	Complete
10016828	None	N/A	Complete
10016843	None	N/A	Complete
10016860	None	N/A	Complete
10017109	None	N/A	Complete
10017168	None	N/A	Complete
10017169	None	N/A	Complete
10017184	None	N/A	Complete
10019885	None	N/A	Complete
10048273	None	N/A	Complete

Notes:

a. See Table 5 for the associated RTR and visual examination data packages. None of the listed containers contains prohibited items as defined by Section B-1c of the Advanced Mixed Waste Treatment Project Quality Assurance Project Plan (QAPjP), MP-TRUW-8.2. The absence of prohibited items is determined and documented through acceptable knowledge and confirmation activities. Radiography or visual examination is performed on each container in this waste stream as a confirmation activity.

b. Acceptable Knowledge confirmations for RTR and visual examinations are conducted by an Acceptable Knowledge Expert on every drum by completing a checklist for each RTR and visual batch. This checklist can be accessed through the batches listed in Table 5.

c. None of these drums have a VE in lieu of RTR examination. N/A indicates that containers have been selected for visual examination by AMWTP.

Table 7. Sample Identification Number Cross Correlation Table. BN004-Lot 1

Container Number	Headspace Gas Sample Number	Solid Sample Number(s)
10001234	HS105_00151B-12	N/A
10001239	HS105_00151B-16	N/A
10001240	HS105_00151B-15	N/A
10001318	HS105_00151B-21	N/A
10001331	HS105_00151B-10	N/A
10001355	HS105_00151B-14 [a]	10066793, 10066794, 10066797
10001387	HS205_00322B-04 [a]	10066183, 10066184, 10066187
10016677	HS105_00151B-03	N/A
10016686	HS105_00151B-05	N/A
10016706	HS505_00050C-16	N/A
10016711	HS105_00151B-18	N/A
10016719	HS105_00151B-06	N/A
10016722	HS105_00151B-07	N/A
10016825	HS505_00045B-20	N/A
10016828	HS505_00045B-21	N/A
10016843	HS505_00050C-10	N/A
10016860	HS505_00050C-18	N/A
10017109	HS505_00050C-11	N/A
10017168	HS105_00151B-08	N/A
10017169	HS205_00322B-03 [a]	10066273, 10066274, 10066277
10017184	HS105_00151B-20	N/A
10019885	HS205_00322B-01 [a]	10066424, 10066425, 10066428
10048273	HS105_00151B-13 [a]	10066701, 10066702, 10066705

a. Headspace gas data from cored drums were not included in the statistics for headspace gas results. These containers are not included in the BN004 reconciliation Lot 1.

Attachment A
Evaluation of Required Number of Samples BN004-Lot 1

ANALYTE	Number of Samples	Number of Samples above MDL [a, b]	Trans-formation Used	Maxi-mum (mg/kg)	Mean (mg/kg)	Standard Deviation (mg/kg)	Upper 90% confidence limit (mg/kg)	Trans-formed PRQL	PRQL [b] (mg/kg)	Required number of samples [c,e,g]	Comments
Arsenic	5	5	None	6.00	4.92	1.00	5.61	-	100	5	Code not required to be applied [i]
Barium	5	5	None	260	230	33.9	253	-	2000	5	Code not required to be applied [i]
Cadmium [f]	5	5	Natural log	-0.073	-0.463	0.265	-0.281	3.00	20	5	Code D006 applied per AK
Chromium [f]	5	5	Natural log	4.22	3.43	0.470	3.75	4.61	100	5	Code D007 applied per AK
Lead	5	5	None	36.0	17.9	12.5	26.5	-	100	5	Code D008 applied per AK
Mercury	5	0	None	0.005	0.005	0.000	-	-	4	-	No samples above MDL
Selenium	5	3	None	0.980	0.564	0.283	0.758	-	20	5	Code not required to be applied [i]
Silver [f]	5	3	Natural log	2.64	0.080	2.02	1.46	4.61	100	5	Code D011 applied per AK
Antimony [f]	5	5	Natural log	0.182	-0.060	0.178	0.062	4.61	100	5	No associated hazardous waste code [d]
Beryllium [f]	5	4	Natural log	0.095	-1.19	1.18	-0.384	4.61	100	5	Code not required to be applied [i]
Nickel	5	5	None	28.0	22.6	5.32	26.2	-	100	5	No associated hazardous waste code [d]
Thallium	5	2	None	1.90	0.959	0.655	1.41	-	100	5	No associated hazardous waste code [d]
Vanadium [f]	5	5	Natural log	4.79	4.08	0.412	4.36	4.61	100	5	No associated hazardous waste code [d]
Zinc	5	5	None	130	84.8	39.7	112	-	100	17	No associated hazardous waste code [d]
1,1-Dichloroethene (1,1-Dichloroethylene)	5	0	None	0.185	0.178	0.007	-	-	10	-	Code D029 applied per AK
trans-1,2-Dichloroethene (trans-1,2-Dichloroethylene)	5	0	None	0.095	0.088	0.004	-	-	10	-	No samples above MDL
1,1,1-Trichloroethane	5	0	None	0.095	0.088	0.004	-	-	10	-	Codes F001/F002 applied per AK
1,1,2,2-Tetrachloroethane	5	0	None	0.185	0.178	0.007	-	-	10	-	No samples above MDL
1,1,2-Trichloro-1,2,2-trifluoroethane	5	0	None	0.095	0.088	0.004	-	-	10	-	Code F001/F002 applied per AK

ANALYTE	Number of Samples	Number of Samples above MDL [a, b]	Trans-formation Used	Maxi-mum (mg/kg)	Mean (mg/kg)	Standard Deviation (mg/kg)	Upper 90% confidence limit (mg/kg)	Trans-formed PRQL	PRQL [b] (mg/kg)	Required number of samples [c,e,g]	Comments
1,1,2-Trichloroethane	5	0	None	0.095	0.088	0.004	-	-	10	-	No samples above MDL
1,2-Dichloroethane	5	0	None	0.185	0.178	0.007	-	-	10	-	No samples above MDL
Acetone	5	0	None	1.75	1.68	0.087	-	-	100	-	No samples above MDL
Benzene	5	0	None	0.185	0.178	0.007	-	-	10	-	Code F005 applied per AK
Bromoform	5	0	None	0.095	0.088	0.004	-	-	10	-	No samples above MDL
Butanol	5	0	None	1.75	1.68	0.087	-	-	100	-	No samples above MDL
Carbon disulfide	5	0	None	0.095	0.088	0.004	-	-	10	-	No samples above MDL
Carbon tetrachloride	5	0	None	0.095	0.088	0.004	-	-	10	-	Code F001 applied per AK
Chlorobenzene	5	0	None	0.095	0.088	0.004	-	-	10	-	No samples above MDL
Chloroform	5	0	None	0.095	0.088	0.004	-	-	10	-	No samples above MDL
Ethyl benzene	5	0	None	0.095	0.088	0.004	-	-	10	-	No samples above MDL
Ethyl ether	5	0	None	1.75	1.68	0.087	-	-	100	-	No samples above MDL
Isobutanol	5	0	None	1.15	1.11	0.048	-	-	100	-	No samples above MDL
Methanol	5	5	None	6700	3161	2690	5005	-	100	5	Code not required to be applied [j]
Methyl ethyl ketone	5	0	None	1.75	1.68	0.087	-	-	100	-	Code F005 applied per AK
Methylene chloride	5	0	None	0.185	0.178	0.007	-	-	10	-	Code F002 applied per AK
Pyridine	5	0	None	1.75	1.68	0.087	-	-	100	-	No samples above MDL
o-Xylene	5	0	None	0.095	0.088	0.004	-	-	10	-	No samples above MDL
m&p-Xylene	5	0	None	0.185	0.178	0.007	-	-	10	-	No samples above MDL
Tetrachloroethene (Tetrachloroethylene)	5	0	None	0.185	0.178	0.007	-	-	10	-	Codes F001/F002 applied per AK
Toluene	5	0	None	0.095	0.088	0.004	-	-	10	-	Code F005 applied per AK
Trichloroethene (Trichloroethylene)	5	0	None	0.095	0.088	0.004	-	-	10	-	Codes F001/F002 applied per AK
Trichlorofluoromethane	5	0	None	0.095	0.088	0.004	-	-	10	-	No samples above MDL

ANALYTE	Number of Samples	Number of Samples above MDL [a, b]	Trans-formation Used	Maxi-mum (mg/kg)	Mean (mg/kg)	Standard Deviation (mg/kg)	Upper 90% confidence limit (mg/kg)	Trans-formed PRQL	PRQL [b] (mg/kg)	Required number of samples [c,e,g]	Comments
Vinyl chloride	5	0	None	0.185	0.178	0.007	-	-	4	-	No samples above MDL
1,2-Dichlorobenzene (o-Dichlorobenzene)	5	0	None	0.100	0.100	0.000	-	-	40	-	No samples above MDL
1,4-Dichlorobenzene (p-Dichlorobenzene)	5	0	None	0.100	0.100	0.000	-	-	40	-	No samples above MDL
2,4-Dinitrophenol	5	0	None	0.200	0.200	0.000	-	-	40	-	No samples above MDL
2,4-Dinitrotoluene	5	0	None	0.100	0.100	0.000	-	-	2.6	-	No samples above MDL
bis(2-Ethylhexyl) phthalate	5	0	None	0.200	0.200	0.000	-	-	40	-	No samples above MDL
Fluoranthene	5	0	None	0.100	0.100	0.000	-	-	40	-	No samples above MDL
Hexachlorobenzene	5	0	None	0.100	0.100	0.000	-	-	2.6	-	No samples above MDL
Hexachloroethane	5	0	None	0.100	0.100	0.000	-	-	40	-	No samples above MDL
2-Methylphenol (o-Cresol)	5	0	None	0.100	0.100	0.000	-	-	40	-	No samples above MDL
3- & 4-Methylphenol (m- & p-Cresol)	5	0	None	0.20	0.200	0.00	-	-	40	-	No samples above MDL
Nitrobenzene	5	0	None	0.100	0.100	0.000	-	-	40	-	No samples above MDL
Pentachlorophenol	5	0	None	0.100	0.100	0.000	-	-	40	-	No samples above MDL
Phenol	5	0	None	0.355	0.151	0.114	-	-	40	-	No samples above MDL

a. The mean and standard deviation presented are the mean and standard deviation of the method detection limits (after dividing by 2). If all measurements are below detection, the UCL_{95} will not be calculated.

b. For analytes that have both an RTL and a PRQL, the PRQL is used to calculate the required number of samples.

c. The required number "n" of samples pertains only to toxicity characteristic or listed waste analytes and only to those analytes where the associated EPA HWN is not assigned (i.e., it only applies to those cases where a site intends to establish that the constituent is below the regulatory threshold and the associated EPA HWN does not apply).

d. If there is no hazardous waste code associated with an analyte, then that analyte will not be used to define the number of required samples.

e. If there are no samples above the MDL for a given analyte, then that analyte will not be used to define the number of required samples.

f. If a transformation is applied to the distribution to improve normality prior to calculating the mean and variance, then this same transformation is applied to the PRQL / RTL for that analyte.

g. If the calculated sample size is less than 5, then the number of required samples is set to the *program-defined minimum* of 5.

h. Distribution testing is not performed on 2 or fewer applicable samples; therefore, a normal distribution is assumed.

i. The HWN for characteristic or listed hazardous waste is not assigned based on AK, and the UCL_{95} is below the RTL or PRQL.

j. Although the UCL_{95} is above the PRQL for methanol, the waste is not ignitable; therefore, HWN F003 was not applied.

AMWTP
Advanced Mixed Waste Treatment Project

RPT-TRUW-59, Rev. 4

Acceptable Knowledge Summary for Special Setups Waste (BN004)

Advanced Mixed Waste Treatment Project

(Signature on file. See DCR-11340.)
Susan Peterman
TRU Programs Manager

06/27/12
Date

CONTENTS

ACRONYMS AND ABBREVIATIONS iv

1.0 WASTE STREAM DESCRIPTION 1

1.1 Waste Stream Number 1

1.2 Basic Waste Stream Information 1

1.3 Waste Stream Description 3

1.4 Process Description 4

1.5 Prohibited Items 7

1.6 Resource Conservation and Recovery Act Determination 8

1.7 Radionuclides 12

2.0 SHIPPING CONSIDERATIONS 12

2.1 Waste Packaging 12

2.2 Flammability Consideration 13

3.0 REFERENCES 14

TABLES

Table 1-1. Physical waste form description for special setups waste. 3

Table 1-2. Wastes treated in the solidification process..... 5

Table 1-3. Estimated waste material parameter weights per unit of waste for Special Setups Waste (BN004). 7

ACRONYMS AND ABBREVIATIONS

AK	acceptable knowledge
AMWTP	Advanced Mixed Waste Treatment Project
ATWIR	Annual Transuranic Waste Inventory Report
CCP	Central Characterization Project
CFR	Code of Federal Regulations
CH-TRAMPAC	Contact Handled Transuranic Waste Authorized Methods for Payload Control
CH-TRUCON	CH-TRU Waste Content Codes
DOE	Department of Energy
ECM	Electrochemical Milling
EDL	economic discard limit
EDMS	Electronic Document Management System
EDTA	Ethylenediaminetetraacetic acid
EPA	Environmental Protection Agency
HF	hydrofluoric acid
HSG	headspace gas
HWN	hazardous waste number
IDC	item description code
INEEL	Idaho National Engineering and Environmental Laboratory (now INL)
INEL	Idaho National Engineering Laboratory (now INL)
INL	Idaho National Laboratory
nCi/g	nanocuries per gram
NDA	non-destructive assay
PCB	polychlorinated biphenyl
ppm	parts per million
PRQL	program required quantitation limit
RF	Rocky Flats
RFETS	Rocky Flats Environmental Technology Site
RTR	real-time radiography
SDA	Subsurface Disposal Area
TSA-RE	Transuranic Storage Area-Retrieval Enclosure
TWBIR	Transuranic Waste Baseline Inventory Report
UCL_{90}	90% upper confidence limit
VE	Visual Examination
VOCs	Volatile Organic Compounds

WAC	Waste Acceptance Criteria
WAP	Waste Analysis Plan (Attachment B of the WIPP Hazardous Waste Permit)
WIPP	Waste Isolation Pilot Plant
WMP	Waste material parameter
WMC	Waste Matrix Code
WTS	Waste Tracking System

1.0 WASTE STREAM DESCRIPTION

1.1 Waste Stream Number

BN004[1]

1.2 Basic Waste Stream Information

1.2.1 Waste Stream Name

Special Setups Waste[1]

1.2.2 Point of Generation

Rocky Flats (RF) Plant, Building 774[2]

1.2.3 Waste Stream Volume

2,302 55-gallon containers (480 m^3) – current volume[3]

The estimated percentages of transuranic (TRU) activity for special setups waste are 70% greater than 100 nanocuries per gram (nCi/g) and 30% less than 100 nCi/g.

Advanced Mixed Waste Treatment Project (AMWTP) will employ payload management practices in accordance with the Waste Acceptance Criteria (WAC) for waste stream BN004.[7]

1.2.4 Generation Dates

AMWTP stored containers of RF special setups waste generated from 1968 to 1988.[66] Waste stored at AMWTP with generation dates (i.e., pack date) later than 1988 are the result of repackaging (e.g., waste characterization activities).

1.2.5 TRUCON Codes

ID111/ID211[1, 4]

1.2.6 Waste Isolation Pilot Plant (WIPP) Waste Stream ID

Annual Transuranic Waste Inventory Report (ATWIR) Waste Stream ID: IN-BN004 (formerly identified as WIPP Identification Number Transuranic Waste Baseline Inventory Report [TWBIR] Waste Stream ID: IN-W157.144)[5, 67]

1.2.7 Summary Category Group

S3000 Homogenous Solids[1, 6]

1.2.8 Waste Matrix Code Group

Solidified Inorganics

1.2.9 Waste Matrix Codes

S3150 –Solidified Homogeneous Solids

Special setups waste consists of >50% by volume solidified waste form. Specifically, small quantities of liquids were solidified in large quantities of cement as special setups waste. Small quantities of absorbents (Oil-Dri® or vermiculite) were also added. This waste is at least 50% (by volume) inorganic solids and is classified as a homogeneous waste.(36)

1.2.10 Descriptions from the TWBIR and ATWIR

TWBIR waste stream description:

This waste, generated at RF, consists of liquids absorbed on a cement mixture. The liquid wastes were not compatible with aqueous treatment processes and are handled separately due to their plutonium complexing nature.(5)

ATWIR waste stream description:

IN-BN004 (Special Setups) waste was generated from a waste treatment process (predominately laboratory waste) generated in support of plutonium operations at the Rocky Flats Environmental Technology Site (RFETS). Resins and electrochemical milling (ECM) sludges were also solidified with the liquid waste. This waste stream is comprised of solidified waste assigned item description code (IDC) ID-RF-004 and ID-RF-802. Special setups consists of waste >50% by volume inorganic solidified waste. Specifically, small quantities of liquids solidified in large quantities of cement.[a] (67)

1.2.11 Defense Determination

The special setups wastes (BN004) generated at RF and shipped to the Idaho National Laboratory (INL) were generated exclusively through defense program activities. Liquid wastes that were subsequently solidified as special setups waste addressed by this summary were generated from defense related activities (e.g., weapons production and plutonium recovery activities) or from one of the four activities identified in the 1997 Department of Energy (DOE) Carlsbad Area Office (CAO) memorandum(10) as non-defense waste that was inadvertently mixed in the past and from which the non-defense portion cannot be segregated.

---

a. The description in the ATWIR will be revised in the next annual update to add IDC RF 744 and revise the waste stream description to "IN-BN004 (Special Setups) waste was generated from treating wastes (predominately laboratory waste) generated in support of plutonium operations at Rocky Flats. Resins and electrochemical milling sludges were also solidified with the liquid waste. This waste stream is comprised of solidified waste assigned IDC ID-RF-004, ID-RF-744 and ID-RF-802."

In accordance with interim guidance, defense wastes are identified as those wastes generated during work involving only defense activities or during work in which defense and non-defense wastes were inadvertently mixed in the past and from which the non defense portion cannot be segregated. The TRU wastes shipped to the INL covered by the BN004 waste stream profile (WSP) meet this definition.[60]

1.3 Waste Stream Description

1.3.1 Description

Special setups waste was generated from a waste treatment process that solidified process waste (predominantly laboratory liquid waste) generated in support of plutonium operations at RF. Resins and ECM sludges were also solidified with the liquid waste. This waste stream is comprised of solidified waste assigned IDCs RF 004, RF 744, and RF 802. The waste was generated in Building 774. The Special Setups waste is similar in material, physical form, and hazardous constituents and is a single waste stream. The TWBIR number, IDC, waste matrix code (WMC), and waste descriptions for the special setups waste stream are presented in Table 1-1.

Table 1-1. Physical waste form description for special setups waste.

IDC	WMC	Description
RF 004	S3150	Special Setups Waste
RF 744	S3150	Pits 11 and 12 Special Setups
RF 802	S3150	Solidified Laboratory Waste

Special Setups Waste – Building 774 (RF 004). This waste consists of liquids primarily from laboratory operations throughout the plant site that were neutralized, if required, and solidified in Building 774. A mixture of Portland cement and insulation cement (magnesia cement) was placed in a lined 55-gallon drum and identified with container prefix 744. The liquid was neutralized, if required, and then added to the cement mixture. Some drums may contain polyethylene bottles (<4 liters) of solidified waste.[19, 21]

Pits 11 and 12 Special Setups (RF 744). RF 744 was assigned by AMWTP to special setups containers retrieved from Subsurface Disposal Area (SDA) Pits 11 and 12 and identified with container prefix 744. The process and inputs were the same as waste containers identified as RF 004. The retrieved waste containers were originally generated prior to 1972, shipped to INL and buried in Pits 11 and 12. The waste containers were subsequently retrieved from the pits prior to 1979 and placed in the Transuranic Storage Area-Retrieval Enclosure (TSA-RE).[3]

Solidified Laboratory Waste – Building 774 (RF 802). RF 802 replaced RF 004 in approximately 1986.[43] RF changed the IDC, but the process and inputs remained the same.[11]

1.4 Process Description

1.4.1 Areas of Operation

The waste was generated in Building 774 by solidifying waste generated from various locations at RF.[13, 16, 23, 24, 40]

1.4.2 Process Flow Diagrams

The process flow diagram for the solidification of liquid waste as special setups waste is provided in the archived RF information, Waste Stream Residue Identification and Characterization (WSRIC) Building 774.[30]

1.4.3 Waste Generating Processes

The special setups waste treatment process solidified process waste (predominantly laboratory liquid waste that was not compatible with the primary aqueous waste treatment system). The liquids include complexing agents (e.g., Versene [ethylene diaminetetraacetic acid], tetraphosphoric acid, tributyl phosphate, citrate, oxalic acid, sodium lignosulfonate, and americium oxalate), strong acids, and strong bases. The special setups waste treatment process also solidified solids such as ECM sludges or resins. These wastes were generated primarily from the analytical laboratories, research and development laboratories, and maintenance shops located in Buildings 122, 123, 126, 371, 444, 559, 705, 707, 750, 771, 777, 779, 865, 881, 883, 886, and 991.[2, 4, 12, 14, 16, 21, 30, 31, 34, 39, 42, 44]

If the liquids generated in the analytical laboratories in Buildings 371, 559, and 771 contained plutonium above the economic discard limit (EDL), the liquids were sent to Building 771 for recovery prior to the transfer of the liquid waste to Building 774 for solidification.[27]

The bulk of the waste was packaged in small containers (typically plastic bottles) or in drums at the point of origin and transferred to Building 774; however, some of the liquid waste was received by pipeline transfers from Building 771. A setup logbook was used in Building 774 to record the types of waste and generation source. The date of treatment, generation location, waste description, and treatment process were entered in the logbook.[39, 48] The bulk of the liquid waste treated in the special setups process was laboratory waste, acids, and bases; however, other liquids (e.g., coolants, oils) were also solidified in Building 774. Therefore, individual containers in this waste stream may have limited amounts of organics (less than 10 liters). Containers of 50% or greater solidified organic waste are not included in this waste stream.

1.4.3.1 Neutralization and Solidification

In Building 774, the packaged waste received in plastic bottles was placed into a glovebox. Any acid waste was transferred from the glovebox into Tank T-7 located adjacent to the glovebox and neutralized with sodium hydroxide. After sodium hydroxide was added to

Tank T-7, pH paper was used to ensure the acid waste had been neutralized. Basic liquid wastes were not neutralized prior to solidification.[28, 48]

A mixture of approximately 250–300 pounds of Portland Type I/II cement and 100-150 pounds of insulation cement (magnesia cement) was placed in a lined 55-gallon drum, and the drum was placed on a drum roller to ensure mixing of the contents. The drum was then attached to the glovebox.[29, 48] Approximately 80–100 liters of the basic or neutralized liquid waste was added to the cement mixture.[21, 29, 48] The cement mixture in the drum chemically reacted with the waste solution to form a solid monolith.[28, 48] Periodically, polyethylene bottles (<4 liters) were filled with the cement mixture, sent to the small quantity waste generators on the plant site for addition of the liquid waste, and returned to Building 774 where they were packaged into drums.[21]

1.4.4 Material Inputs

Material inputs for special setups waste are presented in Table 1-2 (based on the type of waste) and include liquid wastes from laboratories, production, maintenance, and research and development activities. The special setups waste treatment process was used to solidify liquid wastes containing complexing agents that made the liquid incompatible or would interfere with the primary aqueous liquid waste treatment processes.

Table 1-2. Wastes treated in the solidification process.

Type of Waste	Compound
Laboratory Wastes	Aqueous wastes generated from sampling various waste streams including those that contain listed solvents (acetone, benzene, carbon tetrachloride, methanol, methylene chloride, methyl ethyl ketone, tetrachloroethylene, 1,1,1-trichloroethane, 1,1,2-trichloro-1,2,2-trifluoroethane, trichloroethylene, toluene, and xylene), toxicity characteristic metals (cadmium, chromium, lead, and silver), and electroplating wastes (cyanide bath rinse solutions that contained cadmium, chromium, nickel, and silver). Spent laboratory standards, including the above constituents and 1,1-dichloroethylene.
Acids/bases	Boric, chromic, hydrochloric, hydrofluoric, nitric, perchloric, phosphoric, tetraphosphoric, sodium hydroxide, sulfamic, sulfuric, oxalic, and tartaric.[2]

Type of Waste	Compound
Commercial products	Ox-out (a water solution of nitric acid and ammonium bifluoride);[33, 45] Versene (a trade name ethylenediaminetetraacetic acid [EDTA] product),[21, 54] Kepro developer (contains 1,1,1-trichloroethane),[33, 55] Metex solution (a trade name for a series of inorganic and organic acids or salts)[35] and Turco solutions (a trade name for a series of cleaners with various combinations of acids, complexing agents, and surfactants).[33, 53]
Complexing agents	Sodium lignosulfonate, tributyl phosphate, tetraphosphoric acid, citrate, oxalic acid, americium oxalate, and EDTA
ECM electrolyte	A mixture of chromic, sulfuric, and phosphoric acids[56]
Radionuclides	^{133}Ba, ^{55}Fe ^{237}Np, ^{239}Pu, ^{90}Sr, and tritium (sources)
Resins	Spent anion and cation resins
Other chemicals	Dicesium hexachloroplutonate, cyanide, acrylonitrile (vinyl cyanide), thiocyanate, and sodium sulfide solutions

1.4.5 Waste Material Parameters

To estimate the waste material parameter (WMP) weight percentages for BN004, WMP data from 100% of the completed real-time radiography (RTR) and visual examination (VE) of special setups waste drums were obtained from the AMWTP Waste Tracking System (WTS) database on October 11, 2006. This represents 49% of the estimated number of drums for this waste stream. The special setups waste was generated at RF from 1971 through 1988. Drums evaluated to estimate the WMP weights per unit of waste were generated from 1972 through 1988. Approximately 3% of the waste was generated prior to 1972. AK indicates that the waste generated in 1971 is similar to the wastes that have undergone RTR and VE. Therefore, the WTS data is representative of the waste stream. WTS is AMWTPs comprehensive, DOE-audited waste tracking database in which all waste containers are tracked cradle-to-grave and all related characterization data are stored. A statistical analysis of the RTR and VE data was performed to estimate WMP weights (by percent) for special setups waste, excluding packaging, in accordance with the requirements of MP-TRUW-8.13, Collection, Review, and Management of Acceptable Knowledge Documentation, and are summarized in Table 1-3.[50, 57–59]

Table 1-3. Estimated waste material parameter weights per unit of waste for Special Setups Waste (BN004).

Potential Waste Material Parameters	Unit Weight by Percent
Iron-based Metals/Alloys	<1
Aluminum-based Metals/Alloys	<1
Inorganic matrix	99
Other Inorganic Materials	<1
Cellulosics	<1
Plastics (waste materials)	<1
Rubber	<1

Although individual drums in this waste stream may contain other homogenous solid waste and debris materials, the waste stream as a whole will be greater than 50%, by volume, inorganic solidified homogeneous solids.[2, 50]

1.5 Prohibited Items

The following items are prohibited at the WIPP in accordance with Section B-1c of MP-TRUW-8.2, Quality Assurance Project Plan, and Section 3 of MP-TRUW-8.1, Certification Plan for INL Transuranic Waste.[9, 63]

- Liquid waste and prohibited observable liquids
- Non-radionuclide pyrophoric materials
- Hazardous wastes not occurring as co-contaminants with TRU mixed wastes
- Wastes incompatible with backfill, seal and panel closure materials, container and packaging materials, shipping container materials, or other wastes
- Wastes containing explosives or compressed gases
- Wastes with polychlorinated biphenyls (PCBs) not authorized under an U.S. Environmental Protection Agency (EPA) PCB waste disposal authorization
- Wastes exhibiting the characteristic of ignitability, corrosivity, or reactivity (hazardous waste numbers [HWNs] D001, D002, or D003)
- Waste that has ever been managed as high-level waste and waste from tanks specified in Table B-8 of MP-TRUW-8.2 unless specifically approved through a Class 3 permit modification.[63]

- Any waste container from a waste stream (or waste stream lot) that has not undergone either radiographic or VE of a statistically representative subpopulation of the waste stream in each shipment, as describe in Attachment B7 of MP-TRUW-8.2.[63]

- Sealed containers greater than four liters.

The absence of prohibited items is determined and documented through acceptable knowledge (AK) and characterization activities. Real-time radiography or VE is performed on each container in this waste stream to verify the absence of prohibited items.[51, 52] Containers that are identified as containing prohibited items during RTR or VE are treated or rejected, as appropriate. Drums containing prohibited items will not be shipped to WIPP. Non-hazardous solidification agents Aquaset®, Aquaset II-G®, and Micro Cel® E may be added to the waste by AMWTP to treat liquid in excess of WIPP WAC limits.[64, 65]

1.6 Resource Conservation and Recovery Act Determination

1.6.1 EPA Hazardous Waste Numbers

Special setups waste is characterized as mixed-TRU waste. Toxicity characteristic HWNs applied to the waste are D006, D007, D008, D011, and D029. Listed HWNs applied to this waste stream are F001, F002, F005, F006, F007, and F009.

1.6.2 Hazardous Determination

The hazardous waste determination for special setups waste is described in the following subsections.

1.6.2.1 Characteristic Waste

1.6.2.1.1 Ignitability

The materials in this waste stream do not meet the 40 Code of Federal Regulations (CFR) 261.21 definition of ignitability. The materials in this waste stream are not liquid waste. Furthermore, non hazardous absorbents (i.e., cement, vermiculite, and Oil-Dri®) were added during packaging for purposes of absorbing liquids. Containers identified with liquid in excess of WIPP WAC limits may be treated using non-hazardous solidification agents (e.g., Aquaset®, Aquaset II-G®, or Micro Cel® E) to render the waste acceptable prior to shipment.[64, 65] The materials are not liquid and are not capable of causing fire through friction, absorption of moisture, or spontaneous chemical change. These materials are not compressed gases, and the containers do not contain compressed gases. These materials are not Department of Transportation (DOT) oxidizers as defined in 49 CFR 173. Feed solutions contained small amounts of oxidizers such as oxalic acid or nitric acid; however, the waste solutions were neutralized and solidified, and the final form does not meet the definition of an oxidizer.[16-21] Therefore, this waste stream does not exhibit the characteristic of ignitability (D001).

1.6.2.1.2 Corrosivity

The materials in this waste do not meet the definition of corrosivity as defined in 40 CFR 261.22. This waste is not a liquid. Furthermore, absorbents (i.e., cement, vermiculite, and Oil-Dri®) were added during packaging for purposes of absorbing liquids.[7, 18–21] Containers identified with liquid in excess of WIPP WAC limits may be treated using non-hazardous solidification agents to render the waste acceptable prior to shipment (e.g., Aquaset®, Aquaset II-G®, or Micro-Cel® E).[64, 65] Therefore, the corrosive characteristic (D002) does not apply to this waste stream.

1.6.2.1.3 Reactivity

The materials in this waste stream do not meet the 40 CFR 261.23 definition of reactivity. The materials are stable and will not undergo violent chemical change. The materials will not react violently with water, form potentially explosive mixtures with water, or generate toxic gases, vapors, or fumes when mixed with water. The materials are not capable of detonation or explosive reaction. The materials are neither forbidden explosives nor Division 1.1, 1.2, or 1.3 (Class A or B) explosives as defined in 49 CFR 173, nor do the drums contain explosive materials.[16–21] On five occasions, small volumes of cyanide, acrylonitrile (vinyl cyanide), thiocyanate, and sodium sulfide solution were included in the liquid waste prior to solidification and are included in this waste stream.[39] However, if exposed to pH conditions between 2 and 12.5, they will not generate toxic gases, vapors, or fumes in a quantity sufficient to present a danger to human health or the environment because the chemicals have been stabilized in a solidified monolith. Containers identified with compressed gases or aerosol cans will have the prohibited items treated/removed prior to shipment. Containers with liquid in excess of WIPP WAC limits may be treated with non-hazardous solidification agents to render the waste acceptable prior to shipment (e.g., Aquaset®, Aquaset II-G®, or Micro-Cel® E).[64, 65] The materials in this waste stream are, therefore, not reactive wastes (D003).

1.6.2.1.4 Toxicity

The toxicity characteristic contaminants fall into one of two categories: metals and organics. Organic compounds include halogenated and non-halogenated solvents, pesticides, herbicides, and other toxic organic compounds.

AK documentation indicated the presence of toxicity characteristic metals cadmium (D006), chromium (D007), lead (D008), and silver (D011) because these constituents are present in the liquid wastes from the analytical laboratories and research and development operations.[1, 2, 41] Even though these contaminants were not detected in solid sampling and analysis at concentrations above their associated program required quantitation limit (PRQL) values, the waste stream is conservatively assigned EPA HWNs D006, D007, D008, and D011.

1,1 Dichloroethylene (D029) was detected in the headspace gas (HSG) sampling results. No use for 1,1-dichloroethylene was identified within the RF AK (except as a laboratory calibration standard); however, this constituent was detected in HSG sampling and analysis conducted previously at INL. Even though the calculated 90% upper confidence limit (UCL_{90})

value is below the PRQL value, EPA HWN D029 is conservatively assigned to the special setups waste.

The special setups waste includes analytical waste generated from the sampling of waste streams containing listed solvents including benzene, carbon tetrachloride, tetrachloroethylene, and trichloroethylene that were used as solvents in many operations on the plant site.[32] Because special setups wastes are characterized as listed hazardous wastes, the toxicity EPA HWNs for these constituents are not applied to this waste stream.

1.6.2.2 Listed Waste

1.6.2.2.1 F-Listed Hazardous Waste Numbers

The materials in this waste stream are listed hazardous wastes because they were mixed with or derived from waste listed in 40 CFR 261, Subpart D as hazardous waste from non-specific sources (40 CFR 261.31).

EPA HWN F001, F002, and F005 are assigned to the special setups waste for spent solvents including carbon tetrachloride (F001); tetrachloroethylene, 1,1,1-trichloroethane, 1,1,2-trichloro-1,2,2-trifluoroethane, trichloroethylene (F001, F002); methylene chloride (F002); and benzene, methyl ethyl ketone, and toluene (F005). EPA HWNs F006, F007 and F009 listed HWNs are assigned to the special setups waste because it may be contaminated with spent electroplating wastes. The special setups waste includes analytical waste generated from sampling and analyzing listed waste.

Carbon tetrachloride, tetrachloroethylene, trichloroethylene, 1,1,1-trichloroethane, and 1,1,2-trichloro-1,2,2-trifluoroethane were identified in AK documents as solvents commonly used in cleaning, degreasing, production, laboratory, and maintenance operations. Benzene, methylene chloride, and toluene were used as solvents in laboratory operations. In addition, 1,1,1-trichloroethane, trichloroethylene, and paint thinner (methyl ethyl ketone and toluene) were used for cleaning, and methylene chloride was used for paint removal.[2] Waste streams with these listed constituents were sampled and analyzed by the RF laboratories, and the waste generated from the laboratories is included in this waste stream. In addition, small amounts (4–8 liters) of organic solvents may have been added to the waste on occasion. Spent solvent wastes included electropolishing solution (containing 2-ethoxyethanol from metallography laboratories) and scintillation cocktail (containing toluene from tritium analysis).[39] Therefore, EPA HWNs F001, F002, and F005 are assigned to this waste stream.

Acetone, methanol, and xylene (non-chlorinated solvents) were also used as solvents in laboratory and production operations. Waste streams with these listed constituents were sampled and analyzed by the RF laboratories, and the waste generated from the laboratories is included in this waste stream. Methanol was detected in the HSG and solid samples at levels above the PRQL, but special setups waste is not a liquid waste. If a waste no longer exhibits the characteristic of ignitability, the F003 HWN can be removed [40 CFR 261.3(9)(1)]. Because the waste is not ignitable, the EPA HWN F003 is not assigned to this waste stream.

EPA HWNs F006, F007, and F009 are assigned because laboratories could have sampled and analyzed treated aqueous wastes from Buildings 374 and 774 treatment facilities. The treated aqueous waste from Buildings 374 and 774 include aqueous waste from electroplating operations (e.g., cyanide bath rinse solutions that contained cadmium, chromium, nickel, and silver) and the waste generated from the laboratories is included in this BN004 waste stream.[23, 27]

AK indicates that 1,1,1-trichloroethane, carbon tetrachloride, trichloroethylene, ethyl benzene, methanol, and xylene were detected above the PRQL based on HSG and solid sampling conducted previously at INL.[22] Confirmatory solid and HSG sampling and analysis did confirm the presence of listed solvent constituents; however, the concentrations are below the associated PRQLs (except for methanol). No additional EPA HWNs are required; therefore, EPA HWNs F001, F002, F005, F006, F007, and F009 are assigned to this waste stream.

1.6.2.2.2 P-, U-, and K-Listed Hazardous Waste Numbers

Although hydrofluoric acid (HF) was identified as a chemical used (for its intended purpose) during plutonium processing at RF, only spent HF sources could have been sent to special setups process. Based on this information, the U134 HWN does not apply to this waste stream.

Based on a review of AK, it was determined that the special setups waste will contain less than one percent beryllium by weight. If beryllium is present, it is a contaminant of the process and not an unused commercial chemical product, an off-specification species, a container residue, or a spill residue thereof. Therefore, the P-listed waste code for beryllium, as defined in 40 CFR 261.33, is not assigned to the waste.

The materials in this waste stream are not discarded commercial chemical products, off specification species, container residues, or spills thereof (40 CFR 261.33). The materials in this waste stream are not P- or U-listed hazardous waste.

The materials in this waste are not hazardous waste from specific sources since they were not generated from any processes listed in 40 CFR 261.32. The materials in this waste stream are, therefore, not K-listed hazardous waste.

1.6.2.3 Toxic Substances Control Act Regulated Contaminants

Polychlorinated biphenyls are not expected to be present in the special setups waste stream in concentrations greater than 50 parts per million (ppm). If any containers are identified during RTR/VE as containing PCB items (e.g., light ballasts) greater than 50 ppm, the drums containing the PCB items will be managed and shipped in accordance with the WIPP WAC.[9, 38]

1.6.2.4 Other Special Setups Waste Streams

RF107.07 was reviewed as being pertinent to this waste stream (BN004).[13] A more specific WMC (S3150) was assigned to BN004 by INL; whereas the general WMC (S3190) was assigned to RF107.07 by RFETS for these solidified inorganic waste streams. INL identified the

same WMC S3150 that was identified for IDC 004 in TWBIR. Listed waste EPA HWNs F001, F002, F005, F006, F007, and F009 were assigned to both waste streams; however, EPA HWNs D006, D007, D008, and D011, assigned to BN004 based on AK were retained although the UCL_{90} values were below the PRQL values.[2] EPA HWN D029 was conservatively assigned to BN004 because 1,1-dichloroethylene was detected in HSG sampling and analysis conducted previously at INL.[2]

RF107.07 assigned the additional EPA HWNs P030, P098, P099, P106, U003, U103, and U108, which are associated with RF waste generated after January 1995.[13, 16] None of the post-January 1995 waste is included in this waste stream.

1.7 Radionuclides

The WIPP-tracked radionuclides of concern for special setups waste are ^{238}Pu, ^{239}Pu, ^{240}Pu, ^{242}Pu, ^{233}U, ^{234}U, ^{238}U, and ^{241}Am.[8, 15, 28, 37] The remaining WIPP-tracked radionuclides, ^{137}Cs and ^{90}Sr, are expected to be present in measurable quantities in special setups waste because sources were disposed of in special setups.[47] In addition, tritium, plutonium, americium, depleted uranium, enriched uranium, ^{233}U, ^{55}Fe, ^{237}Np, ^{133}Ba, ^{60}Co, ^{228}Th, and Cm (no isotope specified)[2, 39, 46] were introduced into the solidification process in liquids received or as sources from various buildings.[2]

The ratios of the two most prevalent radionuclides in the container are compared to confirm existing AK data in compliance with WAC requirements.[7] The two most prevalent radionuclides anticipated in the special setups waste drums are ^{239}Pu and ^{240}Pu.[8]

2.0 SHIPPING CONSIDERATIONS

2.1 Waste Packaging

Special setups waste was contained in an O-ring bag inside a prepared 55-gallon drum attached to the glovebox.[18, 20] Approximately 10 to 15 pounds of Portland cement were added on top of the special setups waste before the O-ring bag was sealed. The special setups waste may also be contained in polyethylene bottles (<4 liters) inside the lined 55-gallon drum.[21]

Depending on waste packaging requirements at the time, several combinations of bags and liners were used to prepare 55-gallon drums for shipment. From 1970 to 1972, waste drums were lined with a polyethylene drum bag. Three to five pounds of Portland cement were placed in the bottom of the drum and in the drum bag. Use of the 90 mil rigid polyethylene liner began in 1972.[21] The rigid liner was placed in each drum and lined with a polyethylene round bottom drum liner.[19, 21, 25, 26] Three to five pounds of Portland cement were placed in the bottom of the rigid liner and in the round bottom liner. When a drum was full, the drum liners were twisted and taped closed, the lid was secured with a bolted ring, and a tamper-indicating device was attached to the drum.[19, 21]

After drums were inspected, one to two quarts of absorbent material (Oil-Dri®) was placed on the top of the outer, sealed polyethylene drum bag. This procedure changed in February 1982

when vermiculite was used to fill the space between the outer, sealed polyethylene drum bag and the top of the 90-mil rigid liner. Any combination of plastic bags that does not exceed five layers of confinement (of which no more than three are inner bags) is acceptable for shipment to WIPP.[62]

Although the procedure changed in 1982 and required vermiculite to be used, strict adherence to the procedure was not followed based on observations from RTR and/or VE. As a result the type, amount, and expected time-frame of absorbent use will vary. The quantity of vermiculite varied from 3-12 pounds according to the amount of waste contained in each drum.[21, 62]

Some of the 55-gallon drums may be overpacked into 83- or 85-gallon drums. Either four 55-gallon drums or two 83- or 85-gallon drums, with either the drum lid filters or the drum lids removed, may be direct loaded into an Standard Waste Box (SWB) equipped with approved filters.

2.2 Flammability Consideration

The payload containers in the waste stream must comply with the Contact Handled Transuranic Authorized Methods for Payload Control (CH-TRAMPAC) requirements. As specified in the CH-TRAMPAC, a determination of compliance with the flammable gas limits will be performed for volatile organic compounds (VOCs), hydrogen, and methane. Headspace gas sampling and analysis is performed when required by the Waste Analysis Plan (WAP) and/or CH TRAMPAC. At a minimum, the HSG analytical results are evaluated to determine the total concentration of flammable VOCs present in the waste. Payload containers, including those with HSG results exceeding 500 ppm flammable VOCs, are evaluated for compliance with applicable CH-TRAMPAC requirements prior to shipment. Payloads containing flammable gases are managed in accordance with CCP-PO-003, CCP Transuranic Authorized Methods for Payload Control (CCP CH-TRAMPAC).[61]

3.0 REFERENCES

NOTE: *AMWTP documents such as procedures, AK reports, and operating instructions, are cited without revision numbers or dates. The most recent revisions of these documents are available through the AMWTP Electronic Document Management System (EDMS). Previous revisions are available on EDMS.*

1. RPT-TRUW-12, AMWTP Waste Stream Designations [P393A]

2. INEL-96/0280, Acceptable Knowledge Document for INEEL Stored Transuranic Waste – Rocky Flats Plant Waste, Rev. 3, February 28, 2003 [P368A]

3. NDK-001-10, Memo to file, Estimation of Number of Drums for BN004 Waste Stream, July 5, 2010 [C876A]

4. DOE/WIPP-01-3194, CH-TRU Waste Content Codes (CH-TRUCON)

5. DOE/TRU-2006-3344, Transuranic Waste Baseline Inventory Report, U.S. Department of Energy [P746A]

6. DOE/LLW-217, DOE Waste Treatability Group Guidance, 1995 [P670A]

7. DOE/WIPP-02-3122, Transuranic Waste Acceptance Criteria for the Waste Isolation Pilot Plant, Rev. 6.5, June 30, 2010

8. RPT-TRUW-07, Determination of Radioisotopic Content in TRU Waste Based on Acceptable Knowledge [P398A]

9. MP-TRUW-8.1, Certification Plan for INL Transuranic Waste

10. Memorandum from DOE CAO to J. M. Roberson, RFFO, and J. M. Wilcynski, INEEL, Identification of Defense Waste Streams Generated at Rocky Flats Environmental Technology Site (RFETS), May 20, 1997 [C191A]

11. Correspondence from G. F. Jaskot to Distribution, Certification Waste Documentation, May 9, 1986 [C008A]

12. Record of Conversation of Maurie Maas, March 19, 2003 [C073A]

13. RMRS-WIPP-98-100, Section 7.29, RFETS Acceptable Knowledge TRU/TRM Waste Stream Summaries, TRM Solidified Inorganic Waste (F001, F002, F005, F006, F007, F009, P030, P098, P099, P106, U003, U103, U108), Profile No. RF107.07 [P494A]

14. Telecon between Al Morgan (retired) of Rocky Flats and Jeff Harrison, Building 776 Size Reduction Area, February 27, 1997 [C175A]

15. Interview of Al Morgan, March 19, 1997 [C184A]

16. Backlog Waste Reassessment Baseline Book, Waste Form 60, Solidified Lab Waste [P495A]

17. PSD87-059, EG&G Sampling Program Results FY1987 [P013A]

18. EGG WM 6503, TRU Waste Sampling Program: Volume I Waste Characterization [P015A]

19. INEL-95/0281, Idaho National Engineering Laboratory Code Assessment of the Rocky Flats Transuranic Waste, August 10, 2006 [P016A]

20. PSD86-061, EG&G Drum Sampling Program Results FY1986 [P021A]

21. WM-F1-82-021, Content Code Assessments for INEL Contact-Handled Stored Transuranic Wastes [P024A]

22. INEL-95/0397, Summary of Transuranic Waste Characterization Programs at the INEL (1979-Present) [P033A]

23. Backlog Waste Reassessment Baseline Book [P052A]

24. Tasks 3 & 4 Final Draft Report, Reconstruction of Historical Rocky Flats Operations and Identification of Release Points [P053A]

25. WO-4034-C, Packaging Wastes for Shipment Offsite (U) [P063A]

26. WO 4034-F, Waste Packaging Requirements [P064A]

27. Waste Stream Identification and Characterization [P067A]

28. Operational Safety Analysis (OSA), Waste Receipt and Processing No. 774.001 [P070A]

29. A-008-LWTO, Process Qualification Report for Miscellaneous Waste Handling and Solidification (Bottlebox) Building 774 [P073A]

30. Waste Stream and Residue Identification and Characterization Building 774. Version 3.2 [P077A]

31. Waste Stream and Residue Identification and Characterization Building 776. Version 3.2 [P078A]

32. ISSN 0738-0232, RCRA Land Disposal Restrictions: A Guide to Compliance, The Hazardous Waste Consultant. Vol. 12, Issue 6, 1995 Edition [P080A]

33. Materials Hazards Manual [P091A]

34. Waste Stream Residue Identification and Characterization Building 559, Version 5.0 [P107A]

35. Material Safety Data Sheet for Metex Chemicals [P119A]

36. INEL 95/029, RWMC-EDF-805, Matrix Parameter Category Groups (MPCG) Engineering Design File [P141A]

37. EDF-RWMC-840, Document SWEPP NDA Compliance Development, Bechtel BWXT Idaho, LLC [P240A]

38. Comparison of Real Time Radiography (RTR) and Visual Examination Results of the Stored Waste Examination Pilot Plant Certified Waste Sampling Program. EDF 2710 and the associated RTR-VE Database CD, December 11, 2002 [P321A]

39. Building 774 Set Up Log Book [U043A]

40. A History of the Rocky Flats Plutonium/Actinide Recovery Plant 1952 to 1991, Draft October 30, 1991 [U047A]

41. Toxicity Characteristic Leaching Procedure Test Results of Cemented Surrogate Analytical Laboratory Solution Waste—Part 2 [U054A]

42. Drum Prefix Numbers and Corresponding Material Balance Areas [U059A]

43. Inventory values as generated by TRIPS Change Request (TCR) 1821, May 22, 2001 [U092A]

44. Draft Characterization Report: Characterization of Rocky Flats Plant Special Setups Sludge Waste (IDCs 004, 802) [U107A]

45. Material Safety Data Sheet for OX-Out 536, ChemClean Corporation [P129A]

46. EDF-3374, Radioassay Data Collected During 3100 Cubic Meter Project [P322A]

47. Cs-137/Sr-90 expected only in RF-IDC 004 and 480 wastes, February 28, 2005 [AKR 05 208]

48. WO-4021-C, Miscellaneous Aqueous Waste Handling and Solidification [P496A]

49. Not used

50. Memorandum to file, Waste Material Parameter Weight Calculations and Supporting Data to Determine Waste Material Parameter Weight per Unit of Waste, January 19, 2007 [C534A]

51. INST-OI-12, Real Time Radiography Operations (Drums)[P407A]

52. INST-OI-34, Non-Facility Visual Examination Operations [P387A]

53. Material Safety Data Sheet for Turco, Turco Products various [P605A]

54. Material Safety Data Sheet for Versene, Dow Chemical [P606A]

55. Material Safety Information for Kepro, Kepro Circuit System various [P607A]

56. RFP-1985, The Heats of Solution of Beryllium in Chemical Milling Solutions, James D. Navratil and Franklin L. Oetting [P608A]

57. MP-TRUW-8.13, Collection, Review and Management of Acceptable Knowledge Documentation [P418A]

58. BBWI-Generated Drum Data, including Data from the Transuranic Waste Management Information System (TWMIS) [U127A]

59. RPT-TRUW-56, Acceptable Knowledge Document for INL Stored Transuranic Waste – Rocky Flats Plant [P649A]

60. Interim Guidance on Ensuring that Waste Qualifies for Disposal at the Waste Isolation Pilot Plant [P203A]

61. CCP-PO-003, CCP Transuranic Authorized Methods For Payload Control (CCP CH TRAMPAC), Central Characterization Project, Rev. 11, June 4, 2009

62. RPT-TRUW-05, Waste Matrix Code Reference Manual [P399A]

63. MP-TRUW-8.2, Quality Assurance Project Plan

64. Material Safety Data Sheets, Aquaset® (sodium montmorillonite) and Aquaset II-G® (sepiolite) Fluid Tech, January 1, 2005 and November 1, 2008 [P881S]

65. Material Safety Data Sheet, Micro-Cel®E, Celite Corporation, January 17, 2007 [P808S]

66. RCM-001-10, Memo to file, Earliest Pack Date for Rocky Flats Waste Retrieved from Pits 11 and 12, July 5, 2010 [C875S]

67. DOE/TRU-20098-3425, Annual Transuranic Waste Inventory Report -2009 [P838A]

AMWTP Advanced Mixed Waste Treatment Project	Waste Stream Profile Form HWN Assignment Worksheet	AMWTP Form 1187 Effective Date: 07/17/02, Rev. 1 MP-TRUW-8.13 Page 1 of 1

WSPF Number: BN004 (RF004, RF802)

AK Source Document / Rev. Number: AMWTP-RPT-TRUW-59, Rev.0

hwn	(1) AK ASSIGNED	(2) STORAGE	(3) RECONC.	(4) DELETE RECONC.	(5) ITEMS/ CONST.	(6) FINAL	(7) PERMIT-TED
F001	X					X	✔
F002	X					X	✔
F003							✔
F004							✔
F005	X					X	✔
F006	X					X	✔
F007	X					X	✔
F009	X					X	✔
D004							✔
D005							✔
D006	X					X	✔
D007	X					X	✔
D008	X					X	✔
D009							✔
D010							✔
D011	X					X	✔
D022							✔
D029	X					X	✔
D032							✔

AK Expert: Vivian Sendelweck Vivian Sendelweck Date: 3/30/06
Print/Sign

Site Project Manager: R A Eschenbaum Date: 3/30/06
Print/Sign
RA ESCHENBAUM

Waste Stream or Waste Type Description: Special Setups

Waste Stream or IDC Number: BN004

AK Information	AK#<1>	Source Document Reference Number
Generator site TRU waste stream (WS) - specific information		
Information identifying the building(s) and/or area (s) from which TRU waste was or is generated.	WS1	C001A, C073A, C184A, C522A, C618A, C822S, C842S, D061A, P001A, P012A, P014A, P016A, P024A, P052A, P067A, P1031A, P127A, P319A, P368A, P435S, P442A, P443A, P494A, P495A, P496A, P608A, P609A, P621A, P649A, P667A, P671S, P717A, P733S, P741A, P744A, P746A, P755A, P759S, P847A, P888A, P953A, U043A, U059A, U069A, U119A, U215A, U223A
Waste stream volume and time period of generation.	WS2	C499A, C507A, C522A, C534A, C535A, C543S, C620A, C842S, C855A, C856A, C861A, C875S, C876A, D032A, D061A, P024A, P090A, P1031A, P127A, P198A, P318A, P319A, P364A, P365A, P368A, P400A, P442A, P443A, P567A, P609A, P621A, P649A, P671S, P743A, P744A, P746A, P755A, P758A, P759S, P826A, P838A, P847A, P888A, U043A, U059A, U069A, U122A, U127A, U215A, U223A, U235S
Waste generating process description for each building, including processes with U134 waste generation, if applicable and process flow diagrams. See instructions if process flow diagrams are not available.	WS3	C008A, C010A, C014A, C175A, P001A, P012A, P014A, P015A, P016A, P024A, P052A, P067A, P070A, P073A, P078A, P107A, P319A, P368A, P435S, P442A, P443A, P494A, P496A, P608A, P609A, P621A, P649A, P667A, P671S, P717A, P743A, P744A, P746A, P758A, P759S, P888A, U043A, U119A
Material inputs or other information identifying chemical content, and event or process that may have modified the chemical properties after generation. Include data for newly generated waste obtained through VE and/or radiography, information demonstrating neutralization of U134 waste and chemical composition that could affect the isotopic distribution.	WS4	C063A, C065A, C085A, C245A, C546S, D061A, D070A, D076A, P016A, P024A, P033A, P052A, P053A, P070A, P091A, P107A, P119A, P164A, P207A, P307A, P310A, P319A, P365A, P368A, P393A, P401A, P409A, P435S, P442A, P443A, P494A, P495A, P496A, P605A, P606A, P607A, P608A, P609A, P621A, P649A, P667A, P717A, P744A, P759S, P808S, P888A, U043A, U054A, U107A, U119A

Implementing Document: MP-TRUW-8.13

AK Information	AK#<1>	Source Document Reference Number
Generator site TRU waste stream (WS) - specific information		
Material inputs or other information identifying physical waste form, and event or process that may have modified the physical properties after generation. Include data obtained through RTR or VE of newly generated waste and physical composition that could affect the isotopic distribution.	WS5	C313A, C315A, C316A, C460A, C499A, C504A, C534A, C546S, C566S, C620A, C840S, C841S, C842S, D061A, P001A, P012A, P014A, P015A, P016A, P021A, P024A, P039A, P043A, P052A, P063A, P064A, P070A, P073A, P090A, P141A, P207A, P319A, P365A, P368A, P372A, P393A, P399A, P435S, P442A, P443A, P465A, P494A, P495A, P496A, P567A, P605A, P606A, P607A, P608A, P609A, P621A, P649A, P667A, P670A, P717A, P741A, P744A, P746A, P755A, P758A, P759S, P838A, P847A, P881S, P888A, U119A, U223A, U230A
EPA hazardous waste constituents in the waste stream and Hazardous Waste Numbers assigned.	WS6	C065A, C079A, C085A, C245A, C313A, C566S, C607A, C840S, C841S, D001A, D011A, D064A, D070A, D076A, D077A, P012A, P013A, P015A, P016A, P052A, P053A, P080A, P207A, P307A, P310A, P365A, P368A, P393A, P435S, P442A, P443A, P494A, P495A, P605A, P606A, P607A, P609A, P649A, P667A, P668S, P717A, P733S, P743A, P744A, P756A, P838A, U046A, U054A, U059A, U060A, U082A, U107A
Specification of the isotopic ratios for the 10 WIPP-tracked radionuclides (241Am, 238PU, 239 Pu, 240 PU, 242Pu, 233U, 234U, 238 U, 90 Sr, and 137Cs) and the radionuclides comprising 95% of the hazard.	WS7	C002A, C130A, C222A, C281A, C285A, C459A, C506A, C551A, C552S, C566S, C840S, C841S, D051A, P024A, P090A, P198A, P227A, P240A, P307A, P322A, P368A, P398A, P435S, P442A, P443A, P494A, P609A, P611A, P621A, P649A, P743A, P744A, P745A, P755A, P759S, P838A, P888A, U043A, U235S
Documentation identifying the presence of prohibited items listed in Section B-1c of the WIPP-WAP.	WS8	C073A, C321A, C511A, C516A, C842S, D070A, P001A, P012A, P013A, P015A, P016A, P021A, P024A, P063A, P358A, P368A, P372A, P399A, P442A, P443A, P465A, P609A, P649A, P667A, P733S, P741A, P744A, P888A, U215A, U223A
<1> The AK#'s are to be used in the Acceptable Knowledge Source Document Summary to aid in the identification of program and waste stream-specific elements within a given document.		

All required AK information has been compiled and tracking numbers assigned.

AK Expert: Nancy Kirk / Nancy Kirk Date: 9/16/10
Print/Sign Date

Site Project Manager: Steve Carpenter Date: 9/16/10
Print/Sign

LDR NOTIFICATION- IDCs RF004 RF802 RF744

WASTE STREAM BN004

The mixed waste identified on manifest number _____ and bearing the EPA hazardous waste numbers D006, D007, D008, D011, D029, F001, F002, F005, F006, F007, and F009 are designated as transuranic (TRU) mixed waste and have been exempted from the land disposal prohibitions of 40 CFR 268 by the Land Withdrawal Act Amendments (Public Law 104-201). This amendment exempts WIPP waste from treatment standards promulgated pursuant to section 3004(m) of the Solid Waste Disposal Act [42 U.S. C. 6924(m)] and are not subjected to the Land Disposal Prohibitions in section 3004(d), (e), (f), and (g) of the Solid Waste Disposal Act. This waste is not prohibited for land disposal.

Container Identification numbers	Hazardous waste number(s)	Land Disposal Prohibition effective date
	D006	May 26, 2000
	D007	May 26, 2000
	D008	May 26, 2000
	D011	May 26, 2000
	D029	December 19, 1996
	F001	Nov 8, 1986
	F002	Nov 8, 1986
	F005	Nov 8, 1986
	F006	July 8, 1989
	F007	July 8, 1989
	F009	July 8, 1989

AMWTP
Advanced Mixed Waste Treatment Project

Bechtel BWXT Idaho, LLC

December 21, 2005

CCN 05-1550

Mr. Dale Bignell
Washington Regulatory and Environmental Services
4021 National Parks Highway
Carlsbad, NM 88220

Subject: Contract No. DE-AC07-99ID13727- Waste Stream Profile, BN004 - SPC-087-2005

Dear Mr. Bignell:

Attached is Waste Stream Profile (WSPF), BN004, Special Setups Waste, and AMWTP-RPT-TRUW-59, *Acceptable Knowledge Summary for Special Setups Waste (BN004)*, for your review and approval. We have evaluated and reviewed the profile, and believe it is compliant with the WAP.

If you have any questions feel free to call me at (208) 557-6323 or Eric P. Schweinsberg (208) 557-6425.

Sincerely,

Steve Carpenter
Acceptable Knowledge/ Alternate Site Project Manager
Bechtel BWXT Idaho, LLC
Advanced Mixed Waste Treatment Project

SPC:cc

cc: Rod Arbon, BBWI
Steve Carpenter, BBWI
Rick Chavez, WRES
Joan Connolly, BBWI
Elvin Dumas, BBWI
Guy Girard, DOE-ID
Tally Jenkins, DOE-ID
Ron Reeves, WRES
Frank Russo, BBWI
Jerry Wells, DOE-ID
Ed Ziemianski, DOE-ID
WIPP Site Documents

DIVIDER

PAGE

RECORD
P2002AR1
B-2014-0243
SONEIL
09/11/2014

1. Source Document Tracking Number: P2002A	2. Revision: 1

3. Category

- [x] Published Documentation
- [ ] Unpublished Documentation
- [ ] Correspondence
- [ ] Discrepancy

4. Title/Description Information: BN510.3 Waste Stream Profile Package for Supercompactor Debris Waste

Document Number: BN510.3
Revision: 0
Author: AMWTP
Date: 02/05/2014

5. AK Element	6. Generator Or Waste Type(s)	7. Location in Source Doc.	8. AK Information Summary:
WM1, WM2, WM3, WM4, WM5, WM6, WM7, WM8	BN	All	BN510.3 WSPF for supercompacted debris waste
WS1, WS2, WS3, WS4, WS5, WS6, WS7, WS8	BN-508, BN-550	All	BN510.3 WSPF for supercompacted debris waste

9. Document Summary:

This is the waste stream profile package for BN510.3 which includes the following:

1. CBFO Approval Letter for CN#1, dated 02/05/14
2. CBFO DRR CN#1, dated 01/28/14
3. CN#1 BN510.3, dated 01/27/14
4. BN510.3 CN#1 Transmittal email, dated 12/19/13
5. CBFO Approval Letter BN510.3, dated 11/27/13
6. CBFO DRR BN510.3, dated 11/20/13
7. WSPF BN510.3 (Forms-1195, 1597, 1598), dated 11/18/13
8. RPT-TRUW-83 R8, dated 01/28/14
9. BN510.3 Form-1067, dated 08/21/14
10. BN510.3 Form 1777, not dated
11. BN510.3 Form-1187, not dated
12. BN510.3 Transmittal email, dated 10/23/13

This revision replaces revision 0 and includes the most recent revision of RPT-TRUW-83 as well as information about Change Notice #1.

INFORMATION ONLY

10. Source Document Data Limitations (if any):

None identified at this time.

	Randall C. Morris		9/9/2014
11. AK Expert:	Print	Sign	Date

Department of Energy
Carlsbad Field Office
P. O. Box 3090
Carlsbad, New Mexico 88221

FEB 5 2014

Mr. John E. Kieling, Chief
Hazardous Waste Bureau
New Mexico Environment Department
2905 Rodeo Park Drive East, Building 1
Santa Fe, New Mexico 87505-6303

Subject: Review of Advanced Mixed Waste Treatment Project Waste Stream Profile Form Number BN510.3, *Supercompacted Debris Waste*

Dear Mr. Kieling:

The Department of Energy, Carlsbad Field Office has approved the Waste Stream Profile Form (WSPF) Number BN510.3, *Supercompacted Debris Waste* for the Advanced Mixed Waste Treatment Project.

Enclosed is a copy of the WSPF as required by Section C-5a of the Waste Isolation Pilot Plant, Hazardous Waste Facility Permit, No. NM4890139088-TSDF.

I certify under penalty of law that this document and all attachments were prepared under my direction or supervision according to a system designed to assure that qualified personnel properly gather and evaluate the information submitted. Based on my inquiry of the person or persons who manage the system, or those persons directly responsible for gathering the information, the information submitted is, to the best of my knowledge and belief, true, accurate, and complete. I am aware that there are significant penalties for submitting false information, including the possibility of fine and imprisonment for knowing violations.

If you have questions, please contact Mr. J. R. Stroble, Director of the Office of the National TRU Program, at (575) 234-7313.

Sincerely,

RC Bryson for
Jose R. Franco, Manager
Carlsbad Field Office

Enclosure

cc: w/enclosure
S. Holmes, NMED *ED
T. Kliphuis, NMED ED
R. Maestas, NMED ED
C. Smith, NMED ED
C. Walker,TechLaw ED
WIPP Operating Record ED
CBFO M&RC
*ED denotes electronic distribution

CBFO:NTP:JRS:PG:14-1824:UFC 5900.00

ATTACHMENT 1
Page 1 of 1

CARLSBAD FIELD OFFICE

SITE: AMWTP

DOCUMENT TITLE: Update for the WIPP Operating Record (Change Notice No. 1) Supercompacted Debris Waste (BN510.3)

DOCUMENT NUMBER AND REVISION: BN510.3

TYPE OF REVIEW: Technical

ASSIGNED REVIEWER: CBFO NTP

FORWARD RESPONSE TO: Site.Documents@wipp.ws

#	PAGE	SECTION	COMMENT (Cite Rqmt, if applicable)	RESPONSE	ACC	REJ
1.			No comments			
2.						
3.						
4.						
5.						

COMMENT RESOLUTION APPROVED:

Norma Castañeda
NTP Signature

January 28, 2014
Date

N/A
QA Signature, if applicable

Date

Update for WIPP Operating Record (Change Notice #1)

Supercompacted Debris Waste (BN510.3)

Please add the following information to the WIPP Operating Record for Waste Stream Profile Form (WSPF) BN510.3. This waste stream is Supercompacted Debris Waste and was approved by DOE/CBFO on November 27, 2013.

The WSPF components are bolded. The updates are:

1. **WSPF Form-1195, Waste Stream Information**

Change number of drums from "9,000 100 gallon drums" to "9,025 100 gallon drums."

2. **WSPF Form-1195, Required Waste Stream Information**

Add new reference number 26 to:

"Material inputs or other information identifying chemical/radionuclide content and physical waste form."

3. **WSPF Form-1195, Additional Acceptable Knowledge Documentation**

Add reference number 26 to:

"Material safety data sheets."

4. **WSPF Form-1195, Reference List**

Change reference number 1 to read:

"RPT-TRUW-83, Acceptable Knowledge Summary for Supercompacted Debris Waste, Rev. 7, December 3, 2013."

Add new reference number 26 to the list of references as follows:

"RPT-TRUW-93, Acceptable Knowledge Document for Los Alamos National Laboratory, Rev. 1, August 1, 2013."

5. **AK Summary, Supercompacted Debris Waste (RPT-TRUW-83)**

Replace Revision 7 with the attached Revision 8. See revised document.

Reason/Justification for Changes

Item 1.

Updated WSPF Form-1195, Waste Stream Information, due to LANL debris waste inclusion as feedstock. This is a waste stream volume increase.

Item 2.

Revised WSPF Form 1195, Required Waste Stream Information, to include new reference 26 for: "Material inputs or other information identifying chemical/radionuclide content and physical waste form."

Update for WIPP Operating Record (Change Notice #1)

Supercompacted Debris Waste (BN510.3)

Item 3.

Revised WSPF Form 1195, Supplemental Documentation, to include new LANL reference (i.e., 26) to line item for "Material Safety Data Sheets."

Item 4.

Updated reference list to include most current revision for reference 1 and to add reference 26.

Item 5.

The AK Summary was revised to include relevant information for the addition of the LANL waste as feedstock to the supercompactor and to update references.

Update for the WIPP Operating Record (BN510.3) certification

The changes submitted in this change notice do not affect the waste stream designation, assignment of EPA hazardous waste numbers, or the waste matrix code assigned to the previously approved BN510.3 waste stream profile form.

I hereby certify that I have reviewed this Update for WIPP Operating Record, and it is complete and accurate to the best of my knowledge. I understand that this information will be made available to regulatory agencies and that there are significant penalties for submitting false information, including the possibility of fines and imprisonment for knowing violations.

Signature of TRU Programs Manager	George Byram, TRU Programs Manager Printed Name and Title	1/27/14 Date

From:	Tedford, Gina
To:	Morris, Randall C.
Subject:	FW: For Approval RPT-TRUW-83 Rev 8 Acceptable Knowledge Summary For Supercompacted Debris Waste
Date:	Monday, September 08, 2014 4:18:18 PM
Attachments:	Change Notice No. 1 Submittal Scanned and signed version 12-19-13 (2).pdf RPT-TRUW-83_R8C.pdf RPT-TRUW-83_R8C-Redline.pdf

---

From: Blattner, Delisa
Sent: Thursday, December 19, 2013 11:04 AM
To: Site Documents - DOE
Cc: Records Management-Document Control; 'marcus.pinzel@wipp.ws'; Schweinsberg, Eric; Roberts, Benjamine B; Wells, Jerry L; Jenkins, Talley W Jr; Byram, George; Tedford, Gina; pinzel.marcu@wipp.ws; guillermo.koreen@wipp.ws; chaves.rick@wipp.ws; Carpenter, Steve; Document Services
Subject: For Approval RPT-TRUW-83 Rev 8 Acceptable Knowledge Summary For Supercompacted Debris Waste

Greetings:

Please find attached the Change Notice to Waste Stream Profile Form (Supercompacted Debris BN-510.3) and RPT-TRUW-83 which has been discussed on the weekly conference call. Included is a red-lined version for your convenience in review and approval.

If you have any immediate questions please contact Steve Carpenter at 208-680-1127.

Thank you
Delisa
AMWTP Doc.Services

Department of Energy
Carlsbad Field Office
P. O. Box 3090
Carlsbad, New Mexico 88221

NOV 27 2013

Mr. John E. Kieling, Chief
Hazardous Waste Bureau
New Mexico Environment Department
2905 Rodeo Park Drive East, Building 1
Santa Fe, New Mexico 87505-6303

Subject: Review of Advanced Mixed Waste Treatment Project Waste Stream Profile Form Number BN510.3, *Supercompacted Debris Waste*

Dear Mr. Kieling:

The Department of Energy, Carlsbad Field Office has approved the Waste Stream Profile Form (WSPF) Number BN510.3, *Supercompacted Debris Waste* for the Advanced Mixed Waste Treatment Project.

Enclosed is a copy of the WSPF as required by Section C-5a of the Waste Isolation Pilot Plant, Hazardous Waste Facility Permit, No. NM4890139088-TSDF.

I certify under penalty of law that this document and all attachments were prepared under my direction or supervision according to a system designed to assure that qualified personnel properly gather and evaluate the information submitted. Based on my inquiry of the person or persons who manage the system, or those persons directly responsible for gathering the information, the information submitted is, to the best of my knowledge and belief, true, accurate, and complete. I am aware that there are significant penalties for submitting false information, including the possibility of fine and imprisonment for knowing violations.

If you have questions, please contact Mr. J. R. Stroble, Director of the Office of the National TRU Program, at (575) 234-7313.

Sincerely,

Jose R. Franco, Manager
Carlsbad Field Office

Enclosure

cc: w/enclosure
S. Holmes, NMED *ED
T. Kliphuis, NMED ED
C. Smith, NMED ED
R. Maestas, NMED ED
C. Walker, TechLaw ED
CBFO M&RC
*ED denotes electronic distribution

CBFO:NTP:JRS:GL:13-0788:UFC 5900.00

ATTACHMENT 1
Page 1 of 1

CARLSBAD FIELD OFFICE

SITE: AMWTP

DOCUMENT TITLE: Waste Stream Profile Form for the Supercompacted Debris Waste

DOCUMENT NUMBER AND REVISION: BN510.3

TYPE OF REVIEW: Technical

ASSIGNED REVIEWER: CBFO NTP

FORWARD RESPONSE TO: Site.Documents@wipp.ws

#	PAGE	SECTION	COMMENT (Cite Rqmt, if applicable)	RESPONSE	ACC	REJ
1.			No comments.			
2.						
3.						
4.						
5.						
6.						

COMMENT RESOLUTION APPROVED:

NTP Signature — Date: 11/20/2013

N/A
QA Signature, if applicable — Date

AMWTP Advanced Mixed Waste Treatment Project	**Waste Stream Profile Form**	Form-1195 Rev. 5 Effective: 03/02/11 Page 1 of 3

Implementing Document: MP-TRUW-8.14

Waste Stream Profile Number: BN510.3
Generator site name: Advanced Mixed Waste Treatment Project
Technical contact: Eric Schweinsberg
Generator site EPA ID: ID4890008952
Technical contact phone number: (208)557-6425
Date(s) of audit report approval by NMED: 4/29/05 (Revised 5/3/05), 6/16/06, 1/18/08, 1/9/09, 1/8/10, 1/25/11, 5/1/12, 9/10/13
Title, version number, and date of documents used for WAP certification:
Certification Plan for INL Transuranic Waste, MP-TRUW-8.1, Rev. 24, June 10, 2013.
Quality Assurance Project Plan, MP-TRUW-8.2, Rev. 17, June 11, 2013
CCP Transuranic Authorized Methods For Payload Control (CCP CH-TRAMPAC), CCP-PO-003, Rev. 13, 7/31/2013

Did your facility generate this waste? ☒ Yes ☐ No If no, provide the name and EPA ID of the original generator:

Waste Stream Information
WIPP ID: IN-BN510.3[3] Summary Category Group: S5000
Waste Matrix Code Group: Heterogeneous Debris Waste Waste Stream Name: Supercompacted Debris Waste
Description from the ATWIR: BN510.3 is a newly generated debris waste stream generated from supercompacted 55-gallon containers of debris waste.[3]

Defense TRU Waste: ☒ Yes ☐ No Check One: ☒ CH ☐ RH
Number of SWBs 92 Number of Drums 9,000 100 gallon drums Number of Canisters 0
Batch Data report numbers supporting this waste stream characterization: See Characterization Summary Report
List applicable EPA Hazardous Waste Numbers:[2] D004, D005, D006, D007, D008, D009, D010, D011, D022, D027, D028, D029, D030, D032, D033, D034, D037, D043, F001, F002, F004, F005, F006, F007, and F009
Applicable TRUCON Content Codes: ID121

Acceptable Knowledge Information[1]
(For the following, enter the supporting documentation used [i.e., references and dates])

Required Program Information
Map of site: Reference Nos.2 and 3
Facility mission description: Reference No.11
Description of operations that generate waste: References Nos.1 and 3
Waste identification/categorization schemes: Reference Nos.1, 3, 4, 5 and 6
Types and quantities of waste generated: Reference No. 1
Correlation of waste streams generated from the same building and process, as appropriate: Reference Nos. 1 and 3
Waste certification procedures: Reference Nos.7 and 21

Required Waste Stream Information
Area(s) and building(s) from which the waste stream was generated: Reference Nos. 1 and 3
Waste stream volume and time period of generation: Reference No. 1
Waste generating process description for each building: Reference Nos.1 and 3
Documentation regarding how site has historically managed the waste: Reference No. 1 and 3
Process flow diagrams: Reference Nos. 1 and 3
Material inputs or other information identifying chemical/radionuclide content and physical waste form: Ref. Nos. 1, 3, 4, 5, 6, 16, 17, 18, 19, 20, 22, and 24
Waste Material Parameter Weight Estimates per unit of waste Reference No. 1

Which Defense Activity generated the waste: (check one)

- ☒ Weapons activities including defense inertial confinement fusion [4]
- ☐ Verification and control technology
- ☐ Defense nuclear waste and material by products management
- ☐ Defense nuclear waste and materials security and safeguards and security investigations
- ☐ Naval Reactors development
- ☐ Defense research and development
- ☐ Defense nuclear material production

Additional Acceptable Knowledge Documentation

Process design documents:	N/A
Standard operating procedures:	Reference Nos. 1, 3, 13, and 25
Safety Analysis Reports:	Reference No. 14
Waste packaging records:	N/A
Test plans/research project reports:	N/A
Site databases:	Reference No 15
Information from site personnel:	N/A
Standard industry documents:	N/A
Analytical data relevant to the waste stream:	N/A
Material safety data sheets:	Reference Nos. 1, 16, 17, 18, 19, 20, 22, and 24
Sampling and analysis data from comparable/surrogate waste streams:	N/A
Laboratory notebooks:	N/A

Characterization Information [2]

For the following, when applicable, enter procedure title(s), number(s) and date(s)

Radiography:	Reference Nos: 8 and 23
Visual Examination:	Reference Nos. 9 and 10

Waste Stream Profile Form Certification:

I hereby certify that I have reviewed the information in this Waste Stream Profile Form, and it is complete and accurate to the best of my knowledge. I understand that this information will be made available to regulatory agencies and that there are significant penalties for submitting false information, including the possibility of fines and imprisonment for knowing violations.

Signature of Site Project Manager	Eric Schweinsberg Printed Name	November 18th, 2013 Date

NOTE: (1) Use back of sheet or continuation sheets, if required.

(2) If radiography, visual examination were used to determine EPA Hazardous Waste Codes, attach a signed Characterization Information Summary documenting this determination.

(3) This waste stream is currently not identified in the ATWIR. The ATWIR will be updated at the time of the next data call to include the following: BN510.3 waste stream is a newly generated debris waste stream generated from supercompacted 55-gallon containers of debris waste.

(4) The debris waste identified as feedstock to the AMWTP Supercompactor originated from various defense-related sources that include: verification and control technology, weapons activities including defense inertial confinement fusion, defense nuclear waste and material by products management, defense nuclear waste and materials security and safeguards and security investigations, Naval reactors development, defense research and development and defense nuclear material production. Currently the largest contributing debris feedstock is associated with debris wastes generated from defense-related weapons activities associated with one or more of eight U.S. Department of Energy (DOE) sites.

Reference List:

1. RPT-TRUW-83, Acceptable Knowledge Summary for Supercompacted Debris Waste, Rev. 6, September 10, 2013
2. DWG-5232-52-0101, Site Plan of the Advanced Mixed Waste Treatment Facility, Rev. 0, April 1999
3. RPT -TRUW-06, Acceptable Knowledge Document for AMWTP Waste, Rev. 15, October 23, 2013
4. RPT-TRUW-12, AMWTP Waste Stream Designations, Rev. 21, October 7, 2013
5. RPT-TRUW-05, Waste Matrix Code Reference Manual, Rev. 33, October 31, 2013
6. RPT-TRUW-07, Determination of Radioisotopic Content in TRU Waste Based on Acceptable Knowledge, Rev. 19, November 5, 2013
7. MP-TRUW-8.5, TRU Waste Certification, Rev. 29, June 11, 2013
8. INST-OI-12, Real-Time Radiography Examinations (Certification Scans), Rev. 52, August 13, 2013
9. INST-OI-34, Non-Facility Visual Examination Operations, Rev. 28, September 3, 2013
10. INST-FOI-17, Facility Visual Examination Operations, Rev. 27, September 3, 2013
11. RPT-PEP-01, Project Execution Plan, Rev 6, October 03, 2012
12. MP-TRUW-8.2, Quality Assurance Project Plan, Rev. 17, June 11, 2013
13. INST-FOI-20, Supercompactor and Post-Compaction Operations, Rev. 40, September 30, 2013
14. RPT-DSA-02, Documented Safety Analysis, Rev. 9, August 23, 2012
15. BBWI-Generated Drum Data, including Data from the Transuranic Waste Management Information System (TWMIS)
16. RPT-TRUW-30, Acceptable Knowledge Summary for Supercompacted Debris Waste (BN510), Rev. 7, July 02, 2012
17. RPT-TRUW-56, Acceptable Knowledge Document for INL Stored Transuranic Waste-Rocky Flats Plant, Rev. 5, May 09, 2012
18. RPT-TRUW-04, Acceptable Knowledge Document for the Battelle Columbus Laboratories, Building JN-4 Plutonium Laboratory, Rev. 6, June 25, 2012
19. RPT-TRUW-13, Acceptable Knowledge Document for INL Stored Transuranic Waste-Mound Plant Waste, Rev. 7, July 05, 2012
20. RPT-TRUW-79, Acceptable Knowledge Document for Materials and Fuels Complex Waste, Rev 3, September 30, 2013
21. MP-TRUW-8.1, Certification Plan for INL Transuranic Waste, Rev. 24, June 10, 2013
22. RPT-TRUW-89, Acceptable Knowledge Baseline for Argonne National Laboratory-East Waste, Rev 1, March 20, 2013
23. INST-OI-14, Drum Assay Operations, Rev 34, October 28, 2012
24. RPT-TRUW-91, Acceptable Knowledge Document for Pre-1980 INL-Exhumed SDA Waste, Rev. 1, August 1, 2013
25. MP-TRUW-8.13, Collection, Review, and Management of Acceptable Knowledge Documentation, Rev. 25, August 13, 2013.

AMWTP Advanced Mixed Waste Treatment Project	**Reconciliation with Data Quality Objectives**	Form-1597 Rev. 7 Effective: 06/12/13 Page 1 of 2

Implementing Document: MP-TRUW-8.11

I certify by signature below that data of sufficient type, quality, and quantity are collected to meet WAP DQOs.

WSPF No.: **BN510.3**

Data Quality Objective	Yes	No	N/A	Comment
1. Have all containers in the lot been assigned the correct Waste Matrix Code?	☒	☐	☐	
2. Have waste material parameter weights been established for each container in the lot?	☒	☐	☐	
3. Does each waste container of waste contain transuranic (TRU) radioactive waste?	☒	☐	☐	
4. Does the waste stream exhibit a toxicity characteristic (TC) under 40 CFR Part 261, Subpart C?	☒	☐	☐	
5. Does the waste stream contain listed waste found in 20.4.1.200 NMAC incorporating 40 CFR, Part 261, Subpart D?	☒	☐	☐	
6. Can the waste stream be classified as hazardous or nonhazardous?	☒	☐	☐	The waste is classified as a mixed waste.
7. Have the overall completeness, comparability, and representativeness quality assurance objectives (QAOs) been met for each of the testing procedures as specified in MP-TRUW-8.2, Sections C3-2 and C3-3, for the lot?	☒	☐	☐	
8. Was an Open nonconformance report (NCR) search performed for all containers/pucks/source containers on the final list for the waste stream profile/reconciliation lot?	☒	☐	☐	

WSPF No.: BN510.3

Data Quality Objective	Yes	No	N/A	Comment
9. Was an Open NCR search performed for all batches in the final list for the waste stream profile/reconciliation lot?	☒	☐	☐	
10. Were all batches identified in the waste stream profile form (WSPF) or reconciliation lot complete through site project manager (SPM) signature release? List any batches identified as not complete through validation.	☒	☐	☐	
11. Were any open NCRs found that are applicable to the waste stream profile/reconciliation lot? List NCR, container, and batch.	☐	☒	☐	
12. Is there an approved AK Sufficiency Determination for this waste stream?	☐	☒	☐	The AMWTP has not sought an AK sufficiency determination for this waste stream.

Site Project Manager: Eric Schweinsberg (Printed name) Eric Schweinsberg (Signature) Nov. 18th 2013 (Date)

2nd Site Project Manager: George Byram (Printed name) George Byram (Signature) 11/18/13 (Date)

WSPF Number: BN510.3 **Lot Number:** 1

Characterization Information Summary
Introduction

Advanced Mixed Waste Treatment Project (AMWTP) has compiled Acceptable Knowledge (AK) information for waste stream BN510.3 Supercompacted Debris Waste as required by MP-TRUW-8.1, Certification Plan for INL Transuranic waste and MP-TRUW-8.2, Quality Assurance Project Plan, (QAPjP). In addition, AMWTP has conducted characterization using Acceptable Knowledge (AK), Real Time Radiography (RTR)/Visual Examination (VE) and Non-Destructive Radioassay (NDA/RA).

Justification for Selection of RTR and/or VE as an appropriate method for characterizing the waste

The box line waste is characterized using VE and the direct feed waste is characterized by RTR or VE. VE is the appropriate method for characterizing box line waste because it can be accomplished and recorded per the QAPjP (MP-TRUW-8.2) during sorting, size reduction, and repackaging into 55 gallon drums. Radiography is the appropriate method for the direct feed line because it can be readily accomplished per the QAPjP (MP-TRUW-8.2) on direct feed drums. Where dense or otherwise impenetrable objects and/or lead shielding that may create a condition or configuration where examination using radiography will not yield acceptable DQOs, only VE is appropriate. The selected containers in the initial lot have undergone the appropriate RTR/VE and NDA characterization techniques in addition to characterization by AK. The physical form was confirmed to match the AK physical form description for the applicable IDC prior to compaction and all containers have been assigned to the correct waste matrix code.

Table 1 presents the correlation of Container Identification Numbers to Data Packages. Table 2 presents the RTR/VE summary of prohibited items for each container in the lot.

The Site Project Manager (SPM) signature certifies that through AK, testing and/or analysis that the waste included in this waste stream is not corrosive, ignitable, reactive, or incompatible with the WIPP Treatment, Storage, and Disposal Facility (TSDF) and does not contain prohibited items (See RPT-TRUW-83 for more information).

HWNs are assigned based on AK. The HWN assignment for this waste stream includes:

- Toxicity characteristic metals – D004 through D011
- Toxicity characteristic organics – D022, D027, D028, D029, D030, D032, D033, D034, D037 and D043
- F-Listed HWNs include: F001, F002, F004, F005, F006, F007 and F009

SPM

Printed Name: Eric Schweinsberg Signature: Eric Schweinsberg Date: November 18th 2013

2nd SPM

Printed Name: George Byram Signature: George Byram Date: 11/18/13

SPM signature indicates that the information presented in this package is consistent with batch data reports and indicates concurrence with all information presented in this report.

WSPF Number: BN510.3 **Lot Number:** 1

Characterization Information Summary

Characterization Description:

Containers listed below were characterized by RTR (INST-OI-12, Real-Time Radiography Examinations [Certification Scans]) and NDA (INST-OI- 14, Drum Assay Operations).

Table 1. Correlation of Container Identification Numbers to Data Package.

Container No.	RTR Data Package	RA Data Package	VE Data Package
10295803	RTR11-00419	ASY11-02566	N/A
10309125	RTR11-00371	ASY11-02567	N/A
10314331	RTR11-00426	ASY11-02580	N/A
10316836	RTR11-00267	ASY11-01600	N/A
10343019	RTR11-00428	ASY12-01931	N/A
10314966	RTR13-00001	ASY13-00023	N/A
10320665	RTR11-00265	ASY11-01599	N/A
10322386	RTR11-00265	ASY11-01584	N/A
10344289	RTR11-00289	ASY11-01764	N/A
10306575	RTR12-00170	ASY12-04138	N/A

WSPF Number: BN510.3 **Lot Number:** 1

Table 2. RTR/VE Summary of Prohibited Items.

Container No.	RTR Prohibited Items	VE Prohibited Items
10295803	None	None
10309125	None	None
10314331	None	None
10316836	None	None
10343019	None	None
10314966	None	None
10320665	None	None
10322386	None	None
10344289	None	None
10306575	None	None

Acceptable Knowledge Summary for Supercompacted Debris Waste

Advanced Mixed Waste Treatment Project

Approval:

(Signature on file. See DCR-13010.)

01/28/14
Date

REVISION LOG

Revision Number	Date Approved	Pages Affected	Description of Revision
0	09/10/2010	All	DCR-9081. Initial issue.
1	01/12/11	Various	DCR-9747. References modified to accommodate reference changes within AK baseline document for Hanford waste. Revised to incorporate WIPP WAP permit renewal changes. Editorial corrections
2	01/31/12	Various	DCR-10508. Added changes approved by CBFO in Change Notice 1 to BN510.1 waste stream profile. Incorporated BLUESHEET-077.
3	09/17/12	5, A1, A2	DCR-11583. Added changes approved by CBFO in Change Notice 2 to BN510.1 waste stream profile.
4	02/07/13	Various	DCR-12077. Added changes approved by CBFO in Change Notice 3 to BN510.1 waste stream profile. Periodic review.
5	03/18/13	Various	DCR-12123. Changes made to address NWP and CBFO DRR comments.
6	09/09/13	All	DCR-12229. Entire document revised. Changed to update the document to reflect addition of MFC waste, to incorporate both BN510.1 and BN510.2 into same document, and to incorporate new WIPP permit requirements.
7	11/27/13	All	DCR-12760. Document changed to reflect the addition of SDA debris waste as Supercompactor feedstock. The new WSP is designated as BN510.3.
8	01/28/14	All	DCR-13010. Update document to include LANL debris waste as feedstock to the Supercompactor.

CONTENTS

1.0 WASTE STREAM DESCRIPTION 1
1.1 Waste Stream Number 1
1.2 Basic Waste Stream Information 1
1.3 Waste Stream Description 8
1.4 Process Description 9
1.5 AK Sufficiency Determination 18
1.6 Prohibited Items 19
1.7 Resource Conservation and Recovery Act Determination 20
1.8 Radionuclides 34
2.0 SHIPPING CONSIDERATIONS 36
2.1 Waste Packaging 36
2.2 Flammability Consideration 36
3.0 REFERENCES 36
Appendix A – Approved Feedstock Debris Waste by Original Generator and IDC A1

FIGURES

Figure 1. Flow diagram illustrating the generation and processing of AMWTP supercompacted debris waste..... 11

Figure 2. Document hierarchy and information flow for AK..... 17

TABLES

Table 1. Physical waste form description for BN510.3..... 9

Table 2. Waste material parameters for BN510.3..... 18

Table 3. HWN assignment by generator site for BN510.3..... 22

Table 4. Predominant radionuclides expected in debris wastes by generator site..... 35

ACRONYMS

AE	Argonne National Laboratory-East (generator site prefix)
AFCI	Advanced Fuel Cycle Initiative
AK	acceptable knowledge
AL/CL	Analytical Laboratory/Casting Laboratory
AMWTF	Advanced Mixed Waste Treatment Facility
AMWTP	Advanced Mixed Waste Treatment Project
ANL-E	Argonne National Laboratory-East
ANL-W	Argonne National Laboratory-West
ATWIR	Annual Transuranic Waste Inventory Report
AW	Materials and Fuels Complex (generator site prefix)
BC	Battelle Columbus (generator site prefix)
BN	AMWTP (generator site prefix)
CBFO	Carlsbad Field Office
CCP	Central Characterization Project
CH	contact-handled
CH-TRAMPAC	Contact-Handled Transuranic Waste Authorized Methods for Payload Control
CWS	Chemical Warfare Service
D&D	decommissioning and dismantling
DOD	U.S. Department of Defense
DOE	U.S. Department of Energy
DOHE	Drum Opening Hood Enclosure
DOS	drum opening station
DOT	U.S. Department of Transportation
DRS	Drum Repacking System
DU	depleted uranium
DWHE	Drummed Waste Handling Enclosure
DWPG	drummed waste packaging glovebox
EBR-II	Experimental Breeder Reactor II
EDMS	electronic document management system
EMOP	eight-drum metal overpack pallet
EPA	U.S. Environmental Protection Agency
EU	enriched uranium
EWR	early waste retrieval
FMF	Fuel Manufacturing Facility
HEPA	high efficiency particulate air
HENC	High-Efficiency Passive Neutron Counter
HLW	high-level waste
HRA	Hot Repair Area
HSG	headspace gas
HWMA	Hazardous Waste Management Act
HWN	hazardous waste number

IDC	item description code
IDR	initial drum retrieval
INL	Idaho National Laboratory
LA	Los Alamos National Laboratory (generator site prefix)
LANL	Los Alamos National Laboratory
LLD	lower limit of detection
LLNL	Lawrence Livermore National Laboratory
LSA	low specific activity
MD	Mound Plant (generator site prefix)
MEK	methyl ethyl ketone
MFC	Materials and Fuels Complex
MPFPD	Mixed Plutonium Finishing Plant Debris
NBL	New Brunswick Laboratory
NDA	non-destructive assay
NRF	Naval Reactors Facility
NWPA	Nuclear Waste Policy Act
PCB	polychlorinated biphenyl
PFP	plutonium finishing plant
PK	process knowledge
PMC	plutonium-molybdenum cermet
POS	Plant Optimization System
PPE	personal protective equipment
PPO	pressed plutonium oxide
R&D	research and development
RCRA	Resource Conservation and Recovery Act
RF	Rocky Flats Plant (generator site prefix)
RH	remote-handled
RL	Richland, Washington Hanford Site (generator site prefix)
RLMPFPCD	Richland Mixed Plutonium Finishing Plant Comprehensive Debris
RTG	radioisotopic thermoelectric generators
RTR	real-time radiography
RWMC	Radioactive Waste Management Complex
SCW	special-case waste
SD	pre-1980 INL-Exhumed SDA Waste (generator site prefix)
SDA	Subsurface Disposal Area
SDOP	six-drum overpack box
SMOP	six-drum metal overpack pallet
SNF	spent nuclear fuel
SWB	standard waste box

TRU	transuranic
TRUCON	TRU waste content codes
TSA-RE	Transuranic Storage Area-Retrieval Enclosure
TSCA	Toxic Substance Control Act
VE	visual examination
VOC	volatile organic compound
WAC	Waste Acceptance Criteria
WCA	Waste Characterization Area
WETP	WIPP experimental test program
WG Pu	weapons-grade plutonium
WIPP	Waste Isolation Pilot Plant
WMC	Waste Matrix Code
WMP	waste material parameter

Advanced Mixed Waste Treatment Project

Acceptable Knowledge Summary for Supercompacted Debris Waste

1.0 WASTE STREAM DESCRIPTION

1.1 Waste Stream Number

BN510.3.

1.2 Basic Waste Stream Information

1.2.1 Waste Stream Name

Supercompacted Debris Waste

1.2.2 Point of Generation

Advanced Mixed Waste Treatment Facility (AMWTF), Building WMF-676

1.2.3 Waste Stream Volume

Projected Volumes:

9,025 100-gallon drums (3,420 m^3) [88]

92 standard waste boxes (SWBs) (295 m^3) [78]

Fifty percent of the debris waste feedstock is estimated to contain greater than 100 nanocuries per gram (nCi/g) transuranic (TRU) alpha activity and 50% contains less than 100 nCi/g TRU alpha activity. [13]

1.2.4 Generation Dates and Rate of Generation

August 2013 – December 2018

The average generation rate for BN510.3 is currently estimated at 200 product drums (76 m^3) per month. [79]

1.2.5 TRUCON Codes

ID121 [2]

1.2.6 Waste Isolation Pilot Plant Waste Stream ID

Waste Stream ID: IN-BN510.3

1.2.7 Summary Category Group

S5000 – Debris Waste [3]

1.2.8 Waste Matrix Code Group

Heterogeneous Debris Waste

1.2.9 Waste Matrix Code

The BN510.3 waste stream is assigned the Waste Matrix Code (WMC) S5490 – Unknown/Other Heterogeneous Debris Category.

The unknown/other-heterogeneous WMC includes waste that is consistent with the definition for the Heterogeneous Debris (S5400), but does not meet the criteria for assignment into the S5410, S5420, S5440, S5450, or S5460 specific-detailed categories.(3) The waste stream consists of supercompacted debris waste.

1.2.10 Description from the Annual Transuranic Waste Inventory Report

The Annual Transuranic Waste Inventory Report (ATWIR) will be updated at the time of the next data call to include the following: BN510.3 waste stream is a newly generated debris waste stream generated from supercompacted 55-gallon containers of debris waste. (28)

1.2.11 Defense and WIPP Land Withdrawal Act Determination for AMWTP Waste

The BN510.3 supercompacted debris waste stream generated at the Advanced Mixed Waste Treatment Project (AMWTP) is a result of compaction of heterogeneous debris waste generated at the AMWTP (BN), Argonne National Laboratory-East (AE), Battelle Columbus (BC), Los Alamos National Laboratory (LA), Materials and Fuels Complex (AW), Mound (MD), Rocky Flats (RF), and the pre-1980 INL-exhumed Subsurface Disposal Area (SDA) waste (SD).[a] The debris waste identified as feedstock to the AMWTP Supercompactor originated from various defense-related sources that include: verification and control technology, weapons activities including defense inertial confinement fusion, defense nuclear waste and material by-products management, defense nuclear waste and materials security and safeguards and security investigations, naval reactors development, defense research and development, and defense nuclear materials production.

a. Hanford debris waste (previously identified with the generator prefix "RL") is no longer processed within the Supercompactor.

1.2.11.1 Defense Evaluation

The DOE/WIPP-02-3122, Transuranic Waste Acceptance Criteria for the Waste Isolation Pilot Plant (WIPP-WAC), requires generator sites to use acceptable knowledge (AK) to determine if the TRU waste streams to be disposed at WIPP meet the definition of TRU "defense" waste. Based on guidance from the U.S. Department of Energy (DOE), a TRU waste is eligible for disposal at WIPP if it has been generated, in whole or by part, by one or more of the activities listed in Section 42 U.S.C. 10101(3) of the Nuclear Waste Policy Act (NWPA) of 1982. The term "atomic energy defense activity" means any activity of the Secretary (of the U.S. Department of Energy) performed in whole or in part in carrying out any of the following functions: [11, 23, 24, 46]

- Naval reactors development
- Weapons activities, including defense inertial confinement fusion
- Verification and control technology
- Defense nuclear materials production
- Defense nuclear waste and materials by-products management
- Defense nuclear waste and materials security and safeguards and security investigations
- Defense research and development.

The BN510.3 supercompacted debris waste is comprised of heterogeneous debris wastes that were the result of one or more previously noted defense related activities at the following DOE sites:

- Rocky Flats
  - The TRU debris wastes generated at RF and shipped to the Idaho National Laboratory (INL) were generated through defense program activities, or commingled with non-defense program waste that cannot be segregated. Furthermore, there is no historical record or evidence of spent nuclear fuel (SNF) or high-level waste (HLW) ever having been handled at the RF facility. [6, 18]
- Mound
  - The majority of the MD debris waste was generated during defense-related operations conducted at the MD for a variety of customers, including Lawrence Livermore National Laboratory, Hanford, Oak Ridge National Laboratory, and the Space Program. Plutonium-238 heat sources were designed and developed for spacecraft, generators, and satellites used directly by the U.S. Department of Defense (DOD) or in support of DOD missions. One of the major space programs supported by MD was the

Space Nuclear Auxiliary Power System, which was sponsored by the DOD. Operations at the facility included processing and recovering plutonium, developing reactor fuels, conducting reactor fuel waste studies, and recovery of tritium and other isotopes for both DOD and domestic or private entities. The radioisotopic content (e.g., plutonium and other TRU isotopes of interest) of the MD debris waste is the result of commingling of wastes from both defense-related and domestic activities. Furthermore, there is no historical record or evidence of SNF or HLW ever having been shipped to the INL from the MD facility. [7, 19]

- Battelle Columbus
  - Debris waste feedstock shipped from BC to the INL was generated during decommissioning and dismantling (D&D) of the JN-3 (Research Reactor Building) and other facilities. Defense-related operations were conducted at BC in support of Army, Navy, and Air Force programs. These operations included weapons-related activities and defense research into plutonium materials properties and development, plutonium metallurgy, actinide joining, and weapons production and assembly. Processing of test shot samples, development of ^{238}Pu heat sources for spacecraft for DOD, and some specialized work for Los Alamos were conducted in the JN-4 Plutonium Laboratory. In addition, there is no historical record or evidence of SNF or HLW ever having being shipped to the INL from the BC facility. [8, 20, 21, 22]
- Argonne National Laboratories–East
  - AE is a multidisciplinary research laboratory that performs work in basic and applied science in the areas of engineering, energy technology, chemistry, physics, materials, biomedicine, and environmental studies. AE has been instrumental in the development of nuclear reactors and associated systems, materials, fuel elements, and components for use in both civilian and defense programs. This work included key participation in the development of essentially all the domestic nuclear reactor systems in use today for isotope production, power generation, and naval submarine propulsion, as well as experimental or proposed applications for weapons destruction, defense waste management, defense security and safeguards, and space propulsion. The New Brunswick Laboratory (NBL), located on the AE campus, serves as the technical extension of the U.S. DOE Office of Safeguards and Security in the areas of nuclear material control and accountability, safeguards, and nonproliferation.[52, 61]
    - Commingling of waste occurred at AE because waste was often generated in small volumes (i.e., less than 55 gallons) and numerous waste items were placed together in the same container either at the generator level and/or during repackaging. AE waste generators routinely commingled waste with no segregation of defense from non-defense waste. In addition, waste materials generated during the ongoing destructive examination of materials from

different programs and contamination from fuel cutting/grinding/polishing activities also occurred within the hot cell examination area. (52, 61)

- AE contact-handled (CH) wastes do not contain intact irradiated fuel pin test specimens and do not contain test residues, test materials, and the resultant test fragments from the fuel pin test specimens (including irradiated pin fragments and dispersed particulates [fines and dust]).(52) These wastes were managed as remote-handled (RH) waste. While AE performs research and experiments on fuel-bearing specimens, it does not possess or manage spent fuel elements. The research laboratory operations were not production operations involving the separation or reprocessing of constituent elements from reactor fuel and the CH waste does not include the high level fission products. These types of wastes were managed separately as RH waste. The CH debris waste is not SNF or HLW. (52, 61)

- Materials and Fuels Complex

  - The atomic energy defense activities that apply to the TRU wastes generated by the Materials and Fuels Complex (MFC) are naval reactors development, defense nuclear materials productions, and defense research and development (R&D). Defense-related research activities include continuing development of advanced reactor concepts, fuel cycle process development, as well as development of homeland security research, decontamination and decommissioning technologies, and reactor and fuel cycle safety. MFC has engaged in the same or similar waste-generating activities throughout its operation. Specific examples of defense related activities include the following:(58, 62)

    - Analysis of plutonium for gallium content
    - Laboratory services for Knolls Atomic Power Laboratory and Argonne National Laboratory–East (ANL-E)
    - Analytical support for the Naval Reactors Facility (NRF) was conducted from June 2000 to October 2004
    - Lawrence Livermore National Laboratory (LLNL) plutonium oxide disk fabrication
    - Experimental Breeder Reactor (EBR)-II fuel and experiments analysis.

    Based on the AK review of the MFC process knowledge (PK) documentation and communication with MFC personnel relating to waste-generating processes, the CH-TRU wastes generated at the MFC in the Analytical Laboratory/Casting Laboratory (AL/CL), Fuel Manufacturing Facility (FMF), and Hot Repair Area/Waste Characterization Area (HRA/WCA) were classified as defense-related wastes. All of the sampled waste that was repackaged in the HRA/WCA was

generated from defense sites, principally Rocky Flats, and, because of the use of shared facilities throughout MFC, may have been inherently commingled with non-defense waste in the HRA/WCA. CH-TRU waste generated at MFC in the FMF (B704), AL/CL (B752), and HRA/WCA (B785) and shipped to the AMWTP is generated from a variety of defense and non-defense related activities associated with processing of radioisotopes in development of nuclear fuel, spent fuel disposition technology, liquid metal technology, nuclear waste stabilization, and new storage technologies for spent fuel and highly radioactive materials. In addition, TRU debris waste is generated within gloveboxes from laboratory support for waste and nuclear material characterization via sample preparation and analyses. Debris waste generated within these gloveboxes is inherently commingled at the point of generation. Only defense related waste and commingled defense/non-defense CH-TRU waste are accepted at the AMWTP for subsequent disposal at WIPP. Defense and non-defense wastes are not intentionally mixed within TRU debris waste shipped to AMWTP. Non-defense related waste that is not inherently commingled with defense-related waste at the point of generation is not shipped to AMWTP. (58, 62)

Processing of intact spent fuel is not conducted in the AL/CL, FMF, or HRA/WCA. While MFC analytical operations may have provided support for analysis of irradiated sample fuel material and/or may have contained fuel waste materials that could be classified as waste incidental to reprocessing, the analytical waste received from MFC does not meet the classification of waste that are incidental to reprocessing. In addition, the MFC analytical waste does not consist of intact fuel elements. Historically, all HLW generated at MFC has been segregated, packaged in appropriately shielded containers, and stored in an onsite HLW storage facility. The Argonne National Laboratory-West (ANL-W)/MFC waste received at the AMWTP is not SNF or HLW and is classified as defense-related waste. (58, 62)

- Subsurface Disposal Area (Pre-1980)
  - From 1954 until 1970, the INL SDA received and disposed of a variety of radioactive waste (including TRU wastes) from multiple sources. The wastes disposed of into the SDA were both defense and non-defense waste. Defense-related wastes initially disposed of within INL Radioactive Waste Management Complex (RWMC) SDA Pits and Trenches were from process and defense-related activities such as: verification and control technology, weapons activities including defense inertial confinement fusion, defense nuclear waste and material by-products management, defense nuclear waste and materials security and safeguards and security investigations, Naval reactors development, defense research and development and defense nuclear materials production. Examples of non-defense waste disposed into the INL RWMC SDA include: civilian reactor wastes, medical wastes, United States Geological Service waste, Colorado School of Mines waste, and wastes from various universities. (72)

- The debris waste associated with the SDA was generated as a result of pre-1980 exhumations within specific INL pits and trenches. During the mid to late 1970s, the INL conducted two SDA exhumations that resulted in the generation of TRU waste and subsequent transportation to the Transuranic Storage Area-Retrieval Enclosure (TSA-RE). The Early Waste Retrieval (EWR) Project from 1976 through 1978 associated with Pits 1 and 2, Trenches 1, 5, 7, 8, 9, and 10. Of the four pre-1980 ER investigations, only two resulted in waste being exhumed and transferred to the TSA-RE. The two INL SDA exhumations that contributed waste to the TSA-RE were associated with the INL Initial Drum Retrieval (IDR) Project, and the INL EWR Project. There is no supporting AK retrieval evidence that indicates unused cyanide wastes were generated and placed in the AMWTP inventory as a result of IDR or EWR retrieval investigations.[72] Segregation practices of defense and non-defense related waste was not employed during the 1970 exhumations.

- Due to the condition of some of the exhumed containers and management practices employed during the retrieval operations, the contents of INL exhumed repackaged waste within the TSA RE are assumed to be a composite of the INL SDA waste contributors. While certain TRU waste items may not have been generated directly from defense activities; based on the activities described above and the inability to separate civilian waste from defense waste, the waste is eligible for disposal at WIPP as a commingled defense waste stream generated "in part" by the atomic energy defense activities.[72, 76]

- The debris waste generated during the pre-1980 exhumation activities are not classified as SNF or HLW. SNF and HLW are not candidates for supercompaction. If found, SNF and HLW will be segregated and managed separately until final disposition determinations are conducted.[72]

- Los Alamos National Laboratory

  - The waste received from LANL for purposes of processing within the AMWTP Supercompactor is generated from defense nuclear materials production, defense nuclear waste and materials by-products management, and/or defense research and development activities. In accordance with interim guidance, defense wastes also include those wastes generated during work involving only defense activities, or during work in which defense and non-defense wastes were mixed in the past and from which the non-defense portion cannot be segregated.[82, 83] Debris waste received from LANL has been generated directly from defense activities and/or is based on the activities described above and the inability to separate civilian waste from defense waste. In addition, the waste is not SNF or HLW. As such, the waste is eligible for disposal at WIPP as a defense waste stream.[23, 24, 82, 83]

- Advanced Mixed Waste Treatment Facility
  - The waste generated at the AMWTF (WMF-676) is the result of contact with defense-related TRU debris waste during treatment, characterization, maintenance, repackaging, and management.(5)

In accordance with interim guidance, defense wastes include those wastes generated during work involving only defense activities, or during work in which defense and non-defense wastes were inadvertently mixed in the past and from which the non-defense portion cannot be segregated. Based on the AMWTP's AK documentation for the Supercompactor feedstock waste, the BN510.3 waste stream is defense-related waste.(5, 6, 7, 8, 18, 23, 24, 36, 46, 61, 62, 63, 72, 74, 76, 83, 84, 85, 87, 89, 90)

1.2.11.2 Land Withdrawal Act Evaluation

Public Law 102-579, WIPP Land Withdrawal Act, prohibits the disposal of SNF and HLW as defined by the NWPA at WIPP. According to the NWPA, SNF is defined as "fuel that has been withdrawn from a nuclear reactor following irradiation, the constituent elements of which have not been separated by reprocessing." (46, 63)

In addition, the DOE Radioactive Waste Management Manual expands on this definition to clarify that test specimens of fissionable material irradiated for research and development only, and not production of power or plutonium, may be classified as waste, and managed in accordance with the requirements of this Order (i.e., DOE O 435.1, Radioactive Waste Management) when it is technically infeasible, cost prohibitive, or would increase worker exposure to separate the remaining test specimens from other contaminated material.(41)

High-level waste is defined by the NWPA as "the highly radioactive material resulting from the reprocessing of SNF, including liquid waste produced directly in reprocessing and any solid material derived from such liquid waste that contains fission products in sufficient concentrations, and other highly radioactive material that the Commission, consistent with existing law, determines by rule requires permanent isolation." (46)

Based on the AMWTP's AK documentation for the Supercompactor feedstock wastes, the BN510.3 waste stream does not meet the definition of HLW or SNF. (5, 6, 7, 8, 61, 62, 72, 73, 74, 76, 83, 84, 85, 87, 89, 90)

1.3 Waste Stream Description

1.3.1 BN510.3 Supercompacted Debris Waste

The BN510.3 newly generated debris waste stream is generated from supercompaction of 55-gallon containers of debris waste. The Waste Stream Profile Form for BN510.3 was developed due to the addition of SD feedstock debris waste and the addition of the D033 (hexachlorobutadiene) hazardous waste number that was not assigned to the BN510.2 waste

stream.[58] The addition of LA wastes to the Supercompactor has been approved by the U.S. Environmental Protection Agency (EPA) through the EPA Tier process and does not result in any additional HWNs.[89] Generation of the BN510.2 waste stream has been discontinued as a result of Carlsbad Field Office approval of the BN510.3 waste stream and subsequent processing of SD debris waste into the Supercompactor.[90]

The supercompacted debris waste (i.e., BN510.3) has a common physical form that contains similar hazardous constituents and is generated from a single process or activity (Table 1).

A list of approved feedstock debris (by generator and item description code [IDC]) is presented in Appendix A, Approved Feedstock Debris Waste by Original Generator and IDC.[90]

Table 1. Physical waste form description for BN510.3.

ATWIR Number	IDC	Waste Matrix Code (WMC)	Description
IN-BN510.3	BN-550	S5490	Debris waste from multiple debris waste feedstock sources that have been supercompacted into pucks and packaged into 100-gallon drums.[a]

a. A list of debris waste feedstock IDCs is presented in Appendix A of this report.

The BN510.3 waste stream consists of various combustible and noncombustible debris materials that originated from AE, AW, BC, LA, MD, RF, and SD, as well as AMWTP self-generated non-polychlorinated biphenyl (PCB) debris waste within WMF-676.[5, 6, 7, 8, 52, 53, 58, 66, 72, 82, 90]

The BN510.3 supercompacted debris waste includes heterogeneous debris such as: paper and rags; gloves; wipes; asbestos; personal protective equipment (PPE); plastic and rubber items; filters; leaded gloves, aprons, bricks, and sheeting; metal with and without lead or cadmium; floor tiles, piping, sheet rock, insulation, and glass; raschig rings; crucibles; fire brick; wood; Plexiglas®; Benelex®; pieces of equipment and tools; lab waste; D&D waste; resins; graphite; grit; aerosol cans; asphalt and concrete packaged in 55-gallon drums, supercompacted, and packaged into 100-gallon product drums. Supercompacted debris may contain small amounts of non-debris waste such as absorbed liquids, soil, dirt, sand, absorbent, or homogeneous solids. Non-debris waste will be less than 50% by volume in each 55-gallon drum of compacted debris.[5, 6, 7, 8, 52, 58, 72, 84, 85]

1.4 Process Description

See waste generation process description in Section 1.4.3.

1.4.1 Areas of Operation

The BN510.3 waste stream is generated by supercompaction of debris waste feedstock at the AMWTF in Building WMF-676. [9, 29, 54, 55, 68, 70]

1.4.2 Process Flow Diagram

Figure 1 presents a flow diagram illustrating the generation and processing of AMWTP supercompacted debris waste.

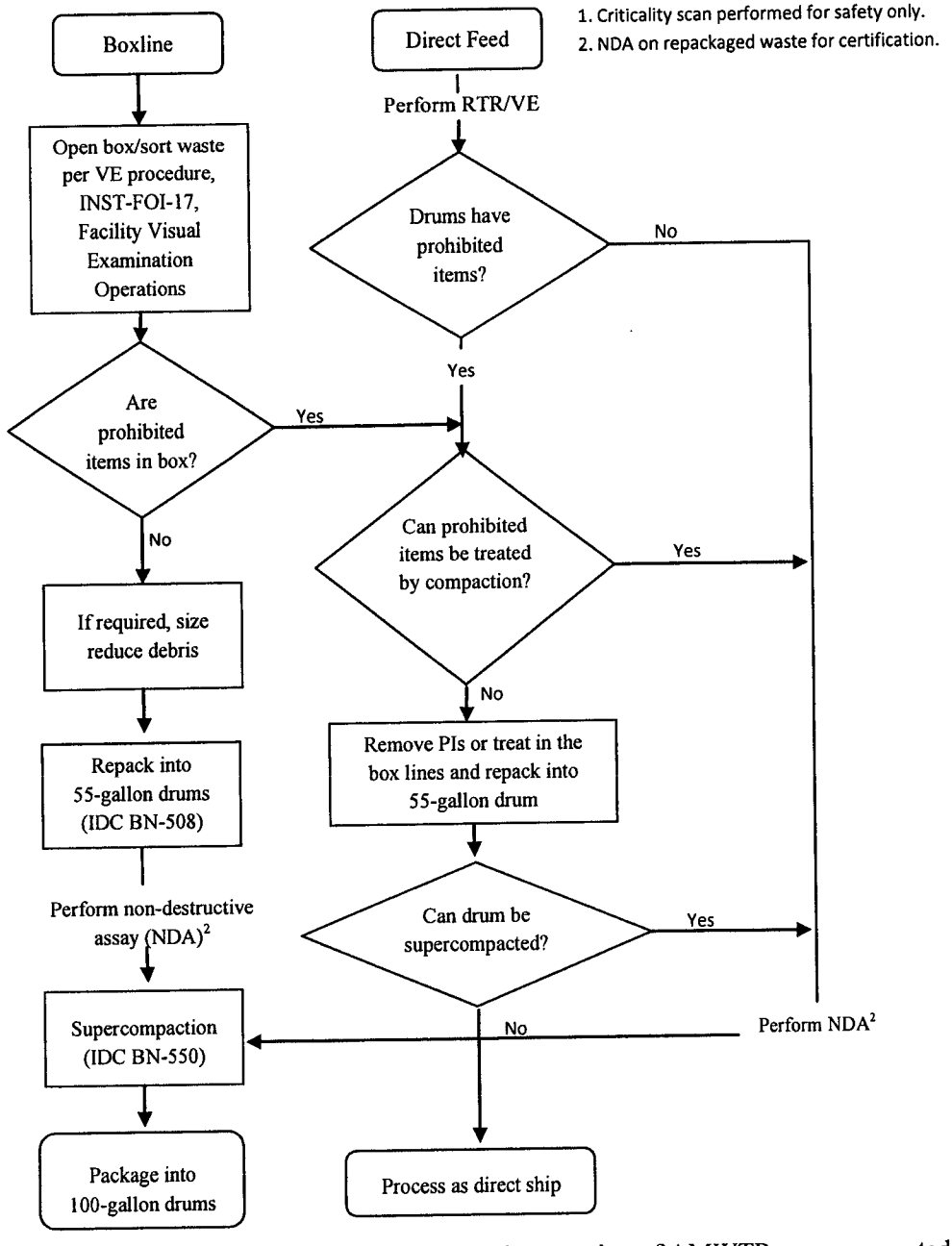

Figure 1. Flow diagram illustrating the generation and processing of AMWTP supercompacted debris waste.

1.4.3 Waste Generating Process

1.4.3.1 BN510.3 Supercompaction Process

The AMWTP waste generation process is supercompaction of individual 55-gallon drums of debris waste feedstock into pucks (the final waste form). Debris waste feedstock contained in 55-gallon drums is characterized and validated through radioassay and real-time radiography (RTR)/visual examination (VE) to verify contents and then sent directly to the Supercompactor for processing. [10, 31, 32, 33, 34]

Debris waste feedstock containers (e.g., 55- or 85-gallon drums) may be introduced into WMF-676 for container and waste management. Waste container preparation, handling, and repackaging are conducted in the WMF-676 Drum Repack System (DRS). The DRS consists of the drummed waste handling enclosure (DWHE), the drum opening hood enclosure (DOHE), which includes the drum opening station (DOS) and the drummed waste packaging glovebox (DWPG), and the special-case waste (SCW) glovebox.[75] Boxes of waste, including overpack boxes, undergo assay and are introduced into a box line for sorting and repackaging into 55-gallon drums. [67] The overpack boxes with uncharacterized drums undergo RTR to confirm the waste is >50% debris in each drum. [10, 31, 57] The drum contents are then visually examined in the box line trough to confirm the waste is approved feed stock.[9] The legacy retrieved boxed wastes undergo RTR to confirm the waste form is approved feed stock. Certified VE is performed on the waste processed in the box line as IDC BN-508. Prohibited items that can be treated may be treated in the box line or sent to the special-case waste (SCW) glovebox. If applicable, after treating, sorting, and/or removal of prohibited item(s), the waste is repackaged into 55-gallon drums as IDC BN-508. [9, 10, 46] No campaigning of approved feedstock type or generator site debris waste feedstock occurs during the supercompaction process. Cleanouts of the box line(s) occur for periodic housekeeping or potential PCB cleanups or to prevent cross-contamination. [9, 53, 54, 55] Repackaged waste drums and direct feed drums (not requiring repack) are fed into the Supercompactor.

The Supercompactor is a glovebox with a 2,000-ton capacity compactor. The Supercompactor size-reduces 55-gallon waste drums to roughly one-fifth their normal size. The supercompacted drums (pucks) are then packaged into 100-gallon containers (puck drums).

The debris waste feedstock is introduced into the Supercompactor as any of the following:

- Direct feed (in original 55-gallon drums from the generator site)
- From the WMF-676 DRS (e.g., DWPG) where containerized waste can be un-overpacked, treated, sorted, or repackaged
- From the waste treatment box line(s) where boxed waste is treated, sorted, size-reduced, and repackaged into 55-gallon drums.

The boxed waste includes multi-drum overpacks (six-drum overpack boxes [SDOPs], eight-drum metal overpack pallets [EMOPs], and six-drum metal overpack pallets [SMOPs]) containing up to eight 55- or six 85-gallon drums). An SDOP is a six-drum overpack wood box, an EMOP is an eight 55-gallon drum metal pallet, and an SMOP is a six 85-gallon drum metal pallet. The multi-drum overpacks are of two types: [10, 31, 56, 57]

(1) The first type is packaged with characterized debris drums for processing in AMWTF. These contain drums with IDCs confirmed by RTR or VE to be approved feedstock debris waste.

(2) The second type is packaged with drums that are not characterized but are labeled with historical AK information that indicates approved feedstock debris waste.

Legacy retrieved boxes from the generators include Sandia steel boxes, bins, fiberglass reinforced plywood boxes, and cake boxes.

After compaction, the drum pucks are loaded into the final 100-gallon drums (IDC BN-550) for shipment to WIPP. [9] No additional chemicals or waste constituents are added to the supercompacted debris waste as a result of this process.

Debris waste generated during WMF-676 maintenance, hot maintenance cell size reduction, repackaging, and VE is also included in the Supercompactor feedstock. This facility-generated waste is visually examined. AMWTP does not add additional hazardous chemicals or waste constituents to the supercompacted debris waste as a result of this process. [10, 29, 54, 55, 56, 68]

The plant optimization system (POS) is used to optimize processing drums through the Supercompactor to produce 100-gallon drums (containing compacted drum pucks) to meet the WIPP Waste Acceptance Criteria (WAC). [4, 9, 26]

1.4.4 Material Inputs

The BN510.3 supercompacted debris waste includes heterogeneous debris such as paper and rags; gloves; wipes; asbestos; PPE; plastic and rubber items; filters; leaded gloves, aprons, bricks, and sheeting; metal with and without lead or cadmium; floor tiles; piping; sheet rock; insulation; glass; raschig rings; crucibles; fire brick; wood; Plexiglas®; Benelex®; pieces of equipment and tools; lab waste; D&D waste; resins; graphite; grit; aerosol cans; asphalt and concrete from multiple DOE sites (i.e., AE, AW, BC, BN, LA, MD, RF and SD) that are approved Supercompactor feedstock. [6, 7, 8, 28, 52, 58, 72, 82, 84, 85, 86, 87, 90, 91] Graphite may be part of the feedstock but does not make up >1% by weight of the feedstock in this waste stream. Supercompacted debris may contain small amounts of non-debris waste such as absorbed liquids, soil, dirt, sand, absorbent, or homogeneous solids. Non-debris waste will be less than 50% by volume in each 55-gallon drum of compacted debris.

The AMWTP retrievably-stored feedstock debris waste was generated at the AE, AW, BC, LA, MD, RF, and SD. The feedstock debris waste was generated during plutonium pit production; depleted uranium component fabrication; enriched uranium processing; support operations including radionuclide recovery, waste treatment, maintenance, laboratory analysis, and machining of non-nuclear weapon components; R&D; special order work; fabrication of ^{238}Pu heat sources and manufacture of radioisotopic thermoelectric generators; D&D activities; and materials development. (6, 7, 8, 52, 58, 72, 82, 90)

The BN debris waste feedstock is generated as a result of AMWTP waste facility maintenance operations, treatment (i.e., supercompaction, absorption of prohibited liquids, and removal of prohibited items), characterization, and general container management activities. (5)

The waste contributions into the BN510.3 waste stream originated at the following DOE facilities operations: (5)

- RF
  - Plutonium metal and plutonium-containing materials manufacture, recovery, and treatment (6)
  - Plutonium production support operations including maintenance, laboratory activities, and R&D (6)
  - Non-routine events including renovations, spills, fires, and decommissioning (6)
  - Construction, demolition, and D&D operations. (6)
- MD
  - D&D of the Mound Plant Facility (7)
  - Pressed plutonium oxide (PPO) sphere and plutonium-molybdenum cermet (PMC) production (7)
  - Plutonium and other isotopic recovery (7)
  - Plutonium manufacture support such as laboratory activities and R&D (7)
  - Facility maintenance. (7)
- BC
  - Research into the metallurgical and ceramic properties of plutonium and its alloys (8)
  - Plutonium processing (8)
  - Development of nuclear fuels (8)
  - D&D of the BC facilities. (8)

- AE
  - Support activities associated with the development and testing of various breeder reactor systems [52]
  - Laboratory operations associated with R&D/DOE waste management and supporting the examining/evaluating of nuclear fuel [52]
  - Repackaging activities [52]
  - Decontamination and decommissioning activities [52]
  - General plant operations including waste management and maintenance. [52]
- AW
  - Recovery of actinides such as plutonium and other radionuclides and characterization of nuclear materials [58]
  - Experimental fabrication of fuel rods, rodlets, slugs, and blankets [59]
  - Transmutation of actinides experiments in support of DOE programs (e.g., Advanced Fuel Cycle Initiative [AFCI], naval reactor, Generation IV Nuclear Reactor, and Space Nuclear Programs) using the recovered plutonium and other actinides [58]
  - Maintenance and decontamination of related equipment and gloveboxes [59]
  - Characterization of WIPP candidate CH-TRU waste (non-radionuclide processing), i.e., headspace gas sampling, visual examination, coring and sample collection. [59]
- SD
  - Pre-1980 INL SDA exhumations. [72]
- LA
  - Defense nuclear materials production [82]
  - Defense nuclear waste and materials by-products management [82]
  - Defense research and development. [82]
- BN
  - Characterization activities [5]
  - Repackaging activities [5]
  - Waste treatment activities including size reduction of large items, supercompaction, absorption of prohibited liquids, and removal of prohibited items [5]

- Facility operations including waste management and maintenance. (5)

The feedstock debris waste received and stored at the AMWTP is packaged in 55- or 85-gallon drums and a variety of boxes, bins, and crates. These boxes, bins, and crates are constructed of metal, plywood, or fiberglass-reinforced plywood and processed in the box lines. Drums of waste may also be packaged in overpack boxes for feedstock to the box lines for processing.

The types of feedstock debris waste containers are as follows:

- Direct feed 55-gallon drums identified by generator (AE, AW, BC, BN, MD, RF, and SD) assigned IDCs
- Boxed debris waste from AE, AW, BC, BN, LA, MD, RF, and SD that is processed in the box line. (75)

The direct feed 55-gallon feedstock debris waste containers retain their generator assigned IDCs until compaction. (1)

1.4.4.1 Supporting AK Documents

The AK document for AMWTP waste, RPT-TRUW-06, Acceptable Knowledge Document for AMWTP Waste, (5) was compiled to provide AK for the AMWTP newly-generated wastes in accordance with MP-TRUW-8.13, Collection, Review, and Management of Acceptable Knowledge Documentation. (12) RPT-TRUW-56, Acceptable Knowledge Document for INL Stored Transuranic Waste – Rocky Flats Plant; RPT-TRUW-13, Acceptable Knowledge Document for INL Stored Waste–Mound Plant Waste; RPT-TRUW-04, Acceptable Knowledge Document for the Battelle Columbus Laboratories Building JN-4 Plutonium Laboratory; RPT-TRUW-89, Acceptable Knowledge Document for Argonne National Laboratory-East Waste; RPT-TRUW-79, Acceptable Knowledge Document for Materials and Fuels Complex Waste; and RPT-TRUW-82, Acceptable Knowledge Document for Hanford Debris Waste Shipped to AMWTP;[b] RPT-TRUW-91, Acceptable Knowledge Document for Pre-1980 INL-Exhumed SDA Waste; and RPT-TRUW-93, Acceptable Knowledge Document for Los Alamos National Laboratory are the AMWTP AK documents for the RF, MD, BC, AE, AW, RL, SD, and LA facilities, respectively. (6, 7, 8, 28, 52, 58, 72, 82, 90)

The flow of the AMWTP AK documentation is presented in Figure 2.

b. RPT-TRUW-82 is cited solely for contribution to the F-listed HWN assignment.

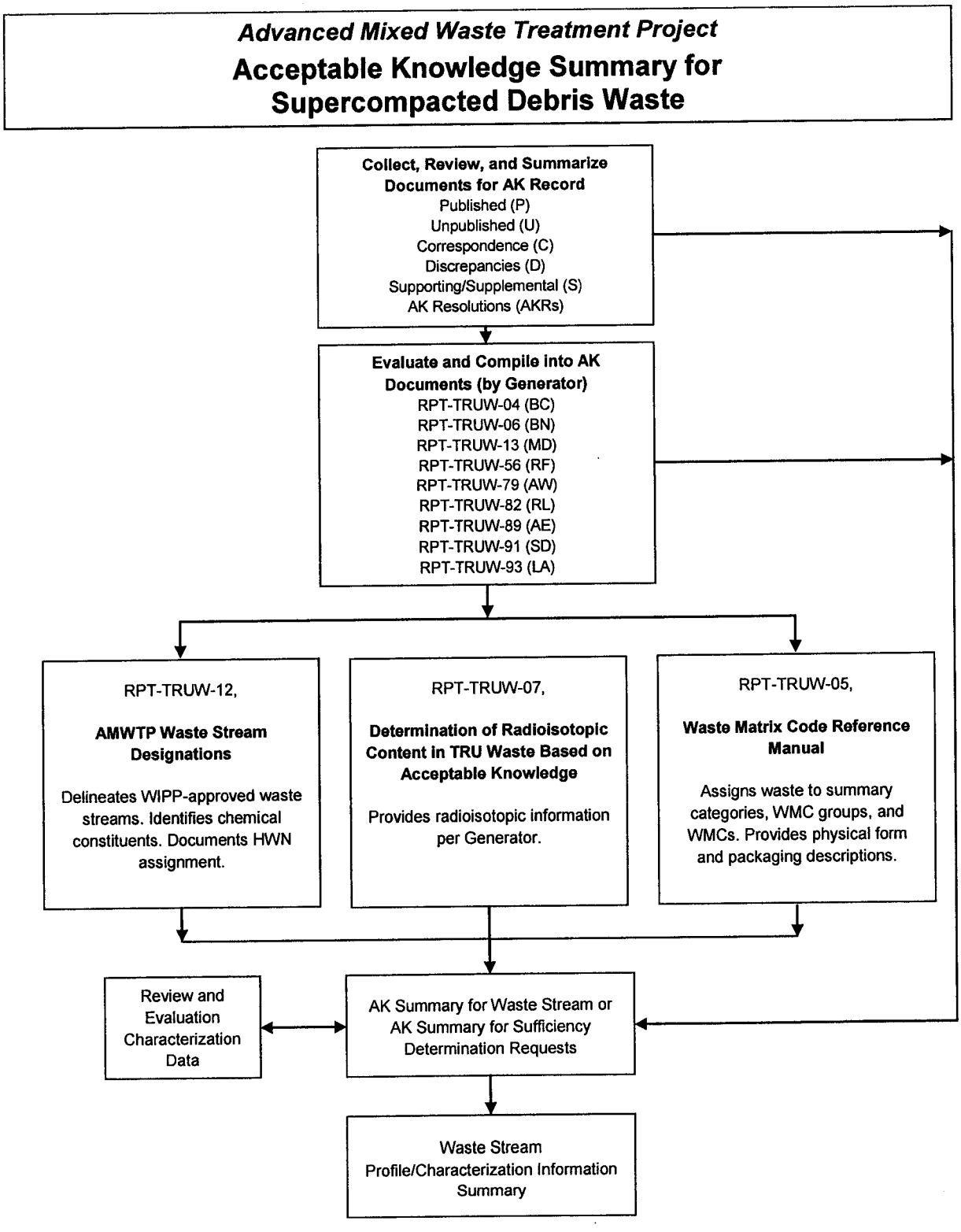

Figure 2. Document hierarchy and information flow for AK.

1.4.5 Waste Material Parameters

1.4.5.1 BN510.3 Supercompacted Debris Waste

The estimated waste material parameter (WMP) weight percentages for the BN510.3 waste stream are based on the VE data for BN510.1 100-gallon product drums generated from July 2, 2010, through September 9, 2013. WMP data for 9,137 containers with completed RTR/VE data from the BN510.1 waste stream were obtained from the AMWTP Waste Tracking System database for containers. The WMP weight parameters based on BN510.1 data are representative of the BN510.3 waste stream. The estimated WMP weights (by percent) for the BN510.3 waste stream were calculated in accordance with the requirements of MP-TRUW-8.13. The WMPs for BN510.3 are summarized in Table 2. [12, 45, 90, 92]

Table 2. Waste material parameters for BN510.3. [45, 90, 92] c

Waste Material Parameters	Estimated Percent WMP Weight/Unit Waste
Iron-based Metals/Alloys	74
Aluminum-based Metals/Alloys	<1
Other Metals	1
Other Inorganic Materials	2
Cellulosics	15
Rubber	1
Plastics (waste materials)	7
Inorganic Matrix	<1
Organic Matrix	<1
Soils/Gravel	<1

1.5 AK Sufficiency Determination

No AK sufficiency determinations apply to this waste stream.

c. No significant changes to the WMPs are expected as a result of adding LANL debris waste to the Supercompactor.[92]

1.6 Prohibited Items

The following items are prohibited in waste containers shipped to WIPP as documented in MP-TRUW-8.1, Certification Plan for INL Transuranic Waste, and MP-TRUW-8.2, Quality Assurance Project Plan. [4, 26]

- Liquid waste and prohibited observable liquids
- Sealed containers greater than 4 liters
- Non-radionuclide pyrophoric materials
- Hazardous wastes not occurring as co-contaminants with TRU mixed wastes
- Wastes incompatible with backfill, seal and panel closure materials, container and packaging materials, shipping container materials, or other wastes
- Wastes containing explosives or compressed gases
- Wastes with PCBs not authorized under an EPA PCB waste disposal authorization
- Wastes exhibiting the characteristic of ignitability, corrosivity, or reactivity (hazardous waste numbers [HWNs] D001, D002, or D003)
- Waste that has ever been managed as high-level waste and waste from tanks specified in Table C-5 (MP-TRUW-8.2, Section C-1c), unless specifically approved through as WIPP RCRA Permit Modification
- High-level waste and SNF as identified in the WIPP Land Withdrawal Act (and as defined in the Nuclear Waste Policy Act of 1982). [46, 63]
- Any waste container from a waste stream which has not undergone either radiographic or visual examination of statistically representative subpopulation of the waste stream.

Supercompaction is the treatment for unprotected sharp objects and sealed containers greater than 4 liters that do not contain prohibited liquids. Because there are no layers of confinement following supercompaction, it is also the treatment for excess layers of confinement.

Feedstock debris wastes that are identified as containing prohibited items during RTR or by VE during box line processing of wastes are treated in the box line, treated by supercompaction, have the prohibited item(s) removed, or are rejected, as appropriate.

Box line(s) are used to VE and repackage the boxed debris waste into 55-gallon drums. Debris waste treated, repackaged, or examined in the WMF-676 DRS (e.g., DWPG), and waste from maintenance and cleanup activities, are packaged according to procedures, subjected to RTR/VE, and undergo nondestructive assay. [33] These drums are then supercompacted and the

pucks packaged into a 100-gallon product drum. The final 100-gallon Supercompactor product drums are identified as AMWTP IDC BN-550. [9, 10, 77, 90, 91]

Prohibited items that can be treated to remove the prohibited characteristic are managed as newly-generated waste. Containers with WIPP-prohibited liquids may be treated using the following non-hazardous materials: Aquaset®, Aquaset II-G®, Petroset II® or Petroset IIG®, Micro-Cel® E, PIG®, or SP-400® absorbents or Hg Absorb for mercury to render the waste acceptable prior to shipment. [37, 38, 47, 48, 49, 51, 64] Newly-generated waste is characterized and assigned to an appropriate waste stream. [4, 26] In the event the treatment renders an acceptable debris waste form that can be compacted, it is included in this waste stream as IDC BN-508.

Prohibited items may be treated in the box lines or processed in the SCW glovebox. [9, 10, 26, 29, 54] Nonhazardous pressurized fire extinguishers or other approved pressurized large cylinders may be vented by a controlled release in the box lines. Box line processes may perform absorption of free liquids in accordance with approved methods. SCW treatment includes management of containers with liquids, pressurized containers, collected free liquids, collected residual liquids, and elemental mercury in accordance with approved methods. After treating, sorting, and/or removal of prohibited item(s), the waste is repackaged into 55-gallon drums as IDC BN-508 if greater than 50% debris by volume. [9, 10, 46, 54, 70]

Some prohibited items are approved for treatment by supercompaction. [60] Supercompaction of 55-gallon drums is the treatment for unprotected sharp objects, pressurized aerosol cans that contain a total liquid volume confirmed by RTR of less than or equal to 49 mL, mixed waste containers with an observable liquid volume confirmed by RTR of not greater than 5% by volume of the waste container, and sealed containers greater than 4 liters. [31, 43, 59, 60, 65, 71] Because there are no layers of confinement following supercompaction, it is also the treatment for excess layers of confinement. [9, 10, 26, 64, 65]

Drums of direct feedstock debris waste identified during RTR/VE as containing PCB items are segregated or sent to DWPG or SCW for item removal. [1, 16, 29, 30, 54] PCB items identified in boxed debris are removed during box line operations. PCB-contaminated waste identified during box line processing is cleaned up in accordance with applicable AMWTP procedures. [53] PCB items removed from feedstock debris waste drums and boxes or generated during the box line PCB cleanup operation are packaged as newly-generated waste and are not authorized as part of this waste stream.

None of the supercompacted debris 100-gallon product drums (BN-550) shipped to WIPP will contain prohibited items.

1.7 Resource Conservation and Recovery Act Determination

The BN510.3 waste is (and has been) subject to the State of Idaho Hazardous Waste Management Act (HWMA)/Resource Conservation and Recovery Act (RCRA) requirements (e.g., 40 CFR 264, Standards for Owners and Operators of Hazardous Waste Treatment, Storage, and Disposal Facilities, and 40 CFR 265, Interim Status Standards for Owners and Operators of

Hazardous Waste Treatment, Storage, and Disposal Facilities) and is currently being managed under the AMWTP RCRA-permitting requirements until it is shipped offsite. [43, 44]

1.7.1 BN510.3 Supercompacted Debris Waste

1.7.1.1 EPA Hazardous Waste Numbers

The BN510.3 supercompacted debris waste is characterized as mixed TRU waste. The HWNs assigned to this waste stream include HWNs associated with the feedstock debris waste as originally compiled in AMWTP AK documents. [5, 6, 7, 8, 28,30, 52, 58, 72, 77, 82, 84, 85, 87, 90, 91]

Toxicity characteristic HWNs applied to the repackaged debris waste are:[1, 5, 6, 7, 8, 28, 30, 52, 58, 72, 77, 82, 84, 85, 87, 90, 91]

D004 (arsenic), D005 (barium), D006 (cadmium), D007 (chromium), D008 (lead), D009 (mercury), D010 (selenium), D011 (silver), D022 (chloroform), D027 (1,4 dichlorobenzene), D028 (1,2-dichloroethane), D029 (1,1 dichloroethylene), D030 (2,4 dinitrotoluene), D032 (hexachlorobenzene), D033 (hexachlorobutadiene), D034 (hexachloroethane), D037 (pentachlorophenol), and D043 (vinyl chloride).

Listed HWNs applied to this waste stream are: [1, 5, 6, 7, 8, 28, 30, 52, 58, 72, 77, 82, 84, 85, 87, 90, 91]

F001: 1,1,1-trichloroethane, 1,1,2-trichloro-1,2,2-trifluoroethane, 1,1,2,2-tetrachloro-1,2 difluoroethane, carbon tetrachloride, methylene chloride, tetrachloroethylene, trichloroethylene, and, trichlorofluoromethane

F002: 1,1,1-trichloroethane, 1,1,2-trichloro-1,2,2-trifluoroethane, 1,1,2-trichloroethane, 1,2-dichlorobenzene, chlorobenzene, methylene chloride, tetrachloroethylene, trichloroethylene, and trichlorofluoromethane

F004: cresols, cresylic acid, and nitrobenzene

F005: 2-ethoxyethanol, 2-nitropropane, benzene, carbon disulfide, isobutanol, methyl ethyl ketone (MEK), pyridine, and toluene

F006, F007, and F009: electroplating waste.

The HWNs assigned to the BN510.3 wastes generated in the WMF-676 facility as a result of supercompaction are derived from the compilation of all EPA HWNs assigned to the approved feedstock debris waste from the contributing generator sites (Table 3). The RL waste is no longer processed as feedstock and has been shipped. Table 3 only identifies the F-listed HWNs and constituents based on the RCRA mixture and the derived from rules. [5, 6, 7, 8, 28, 39, 40, 42, 52, 58, 72, 77, 82, 84, 85, 87, 90, 91]

Table 3. HWN assignment by generator site for BN510.3.

Generator Site/Activity	Arsenic	Barium	Cadmium	Chromium	Lead	Mercury	Selenium	Silver	Chloroform	1,4-Dichlorobenzene	1, 2-Dichloroethane	1,1-Dichloroetthylene	2,4-Dinitrotoluene	Hexachlorobenzene	Hexachlorobutadiene	Hexachloroethane	Pentachlorophenol	Vinyl Chloride	Spent Solvents	Spent Solvents	Spent Solvents	Spent Solvents	Electroplating waste
	D004	D005	D006	D007	D008	D009	D010	D011	D022	D027	D028	D029	D030	D032	D033	D034	D037	D043	F001	F002	F004	F005	F006 F007 F009
Rocky Flats (RF) [6]																							
Isotope recovery [b]	•	•	•	•	•	•	•	•															
Laboratory reagents, research	•	•	•	•	•	•	•	•	•													• [a]	
Degreasing, decontamination																			• [a]	• [a]			
Cleaning, spill clean up																						• [a]	
Electroplating																							• [a]
Based on AK/HSG											•	•											
Mound Plant (MD) [7]																							
PPO & PMC production and isotope recovery [b]	•	•	•	•	•	•	•	•															
Cleaning and degreasing																			• [c]	• [c]		• [c]	
Electroplating																							• [c]
Based on AK/HSG									•			•											

Table 3 (continued)

Activity	Arsenic D004	Barium D005	Cadmium D006	Chromium D007	Lead D008	Mercury D009	Selenium D010	Silver D011	Chloroform D022	1,4-Dichlorobenzene D027	1, 2-Dichloroethane D028	1,1-Dichloroetthylene D029	2,4-Dinitrotoluene D030	Hexachlorobenzene D032	Hexachlorobutadiene D033	Hexachloroethane D034	Pentachlorophenol D037	Vinyl Chloride D043	Spent Solvents F001	Spent Solvents F002	Spent Solvents F004	Spent Solvents F005	Electroplating waste F006 F007 F009
Battelle Columbus (BC) [8]																							
Metallurgical research		•	•	•	•	•		•															
Cleaning and degreasing																			• [d]	• [d]		• [d]	
Argonne National Laboratory – East (AE) [52]																							
Laboratory Operations [e]	•	•	•	•	•	•	•	•		•	•	•	•				•			• [e]	• [e]	• [e]	
Research Generated [e]	•	•	•	•	•	•	•	•		•	•	•	•				•			• [e]	• [e]	• [e]	
D&D [e]	•	•	•	•	•	•	•	•		•	•	•	•				•			• [e]	• [e]	• [e]	
Based on AK/HSG [e]	•	•	•	•	•	•	•	•		•	•	•	•				•			• [e]	• [e]	• [e]	

Table 3 (continued)

Activity	Arsenic D004	Barium D005	Cadmium D006	Chromium D007	Lead D008	Mercury D009	Selenium D010	Silver D011	Chloroform D022	1,4-Dichlorobenzene D027	1, 2-Dichloroethane D028	1,1-Dichloroethylene D029	2,4-Dinitrotoluene D030	Hexachlorobenzene D032	Hexachlorobutadiene D033	Hexachloroethane D034	Pentachlorophenol D037	Vinyl Chloride D043	Spent Solvents F001	Spent Solvents F002	Spent Solvents F004	Spent Solvents F005	Electroplating waste F006 F007 F009
Hanford [28, 39, 40, 42]																							
PFP plutonium metal production operations and glovebox activities including maintenance, clean out, D&D and stabilization:																							
• RLMPDT.001 (MPFPD)																							
• RLMPFPCD																			•[f]	•[f]	•[f]	•[f]	
Radiochemistry Processing Laboratory operations and maintenance (RLM325D.001)																			•[f]	•[f]	•[f]	•[f]	
Metallurgy operations, cleanout, and D&D (RLM231ZD.001)																			•[f]	•[f]		•[f]	

Table 3 (continued)

Activity	Arsenic D004	Barium D005	Cadmium D006	Chromium D007	Lead D008	Mercury D009	Selenium D010	Silver D011	Chloroform D022	1,4-Dichlorobenzene D027	1, 2-Dichloroethane D028	1,1-Dichloroetthylene D029	2,4-Dinitrotoluene D030	Hexachlorobenzene D032	Hexachlorobutadiene D033	Hexachloroethane D034	Pentachlorophenol D037	Vinyl Chloride D043	Spent Solvents F001	Spent Solvents F002	Spent Solvents F004	Spent Solvents F005	Electroplating waste F006 F007 F009
Materials and Fuels Complex (AW) [58]																							
Radionuclide Processing CH-TRU Debris Waste	•	•	•	•	•	•	•	•	•										•[g]	•[g]		•[g]	
Ash Stabilization and GGE Debris Waste IDC AW-165	•	•	•	•	•	•	•	•											•[g]	•[g]		•[g]	
HRA/WCA debris IDC AW-164	•	•	•	•	•	•	•	•	•	•	•	•	•	•		•	•	•	•[g]	•[g]	•[g]	•[g]	•[g]
Subsurface Disposal Area (SD) [72]																							
Pre-1980 exhumations	•	•	•	•	•	•	•	•	•	•	•	•	•	•	•	•	•	•	•[h]	•[h]	•[h]	•[h]	•[h]
Los Alamos National Laboratory (LA) [84, 85, 87]																							
LA-007: Mixed Heterogeneous Debris from TA-55	•	•	•	•	•	•	•	•	•										•[i]	•[i]		•[i]	
LA-009: Heterogeneous Debris from the TA-21	•	•	•	•	•	•	•	•	•										•[i]	•[i]		•[i]	
LA-010: Heterogeneous Debris Waste from TA-50	•	•	•	•	•	•	•	•	•	•	•	•	•				•	•	•[i]	•[i]	•[i]	•[i]	•[i]

Table 3 (continued)

Activity	Arsenic D004	Barium D005	Cadmium D006	Chromium D007	Lead D008	Mercury D009	Selenium D010	Silver D011	Chloroform D022	1,4-Dichlorobenzene D027	1, 2-Dichloroethane D028	1,1-Dichloroetthylene D029	2,4-Dinitrotoluene D030	Hexachlorobenzene D032	Hexachlorobutadiene D033	Hexachloroethane D034	Pentachlorophenol D037	Vinyl Chloride D043	Spent Solvents F001	Spent Solvents F002	Spent Solvents F004	Spent Solvents F005	Electroplating waste F006 F007 F009
	AMWTP (BN)																						
Newly generated waste from composited feedstock (i.e., supercompaction operations)	•	•	•	•	•	•	•	•	•	•	•	•	•	•	•	•	•	•	•[j]	•[j]	•[j]	•[j]	•[j]

Table 3 (continued)

NOTES:

a. RF – F001 = 1,1,1-trichloroethane, 1,1,2-trichloro-1,2,2-trifluoroethane, carbon tetrachloride, tetrachloroethylene and trichloroethylene;
F002 = 1,1,1-trichloroethane, 1,1,2-trichloro-1,2,2-trifluoroethane, methylene chloride, tetrachloroethylene, and trichloroethylene; and F005 = 2-ethoxyethanol, benzene, carbon disulfide, methyl ethyl ketone, and toluene; and F006, F007, and F009 are assigned due to electroplating waste contamination.

b. Process used to recover radioisotopes (e.g., plutonium, americium, neptunium) which caused precipitation of metals as well as the radionuclides.

c. MD – F001 = 1,1,1-trichloroethane, 1,1,2-trichloro-1,2,2-trifluoroethane, carbon tetrachloride, and methylene chloride; F002 =1,1,1-trichloroethane, 1,1,2-trichloro-1,2,2-trifluoroethane, and methylene chloride; F005 = benzene, carbon disulfide, MEK, and toluene. F007 and F009 HWNs are assigned due to electroplating waste contamination.

d. BC – F001 = methylene chloride and trichloroethylene; F002 = methylene chloride and trichloroethylene; and F005 = benzene, MEK, and toluene.

e. AE – D019 carbon tetrachloride, assigned to AE waste, is covered under the F001 assigned to the BN510.1 waste stream. F002 = 1,1,1-trichloroethane, 1,1,2-trichloro-1,2,2-trifluoroethane, chlorobenzene, methylene chloride, tetrachloroethylene, and trichloroethylene; F004 = nitrobenzene; F005 = benzene, carbon disulfide, isobutanol, MEK, and toluene. Due to the commingling of AE waste and management based on content codes during the early years of shipment, the applicable AE HWNs/constituents associated with AE heterogeneous debris waste are the same for all activities.

f. RL – F001 = 1,1,1-trichloroethane, 1,1,2-trichloro-1,2,2-trifluoroethane, 1,1,2,2-tetrachloro-1,2-difluoroethane, carbon tetrachloride, methylene chloride, tetrachloroethylene, trichloroethylene, and trichlorofluoromethane; F002 = 1,1,1-trichloroethane, 1,1,2-trichloro-1,2,2-trifluoroethane, 1,2-dichlorobenzene, chlorobenzene, methylene chloride, tetrachloroethylene, trichloroethylene, and trichlorofluoromethane; F004 = cresols and nitrobenzene; and F005 = 2-nitropropane, benzene, carbon disulfide, isobutanol, MEK, pyridine and toluene. Listed HWN constituents identified in footnote [f] are the summation from referenced AK and process knowledge (PK) documents. Currently, Hanford waste is no longer feedstock to the Supercompactor and as such only the listed hazardous waste numbers are applicable.

g. MFC/AW – F001 = 1,1,1-trichloroethane, carbon tetrachloride, methylene chloride, tetrachloroethylene, and trichloroethylene; F002 = 1,2-dichlorobenzene, 1,1,1-trichloroethane, 1,1,2-trichloro-1,2,2-trifluoroethane; 1,1,2-trichloroethane, chlorobenzene, methylene chloride; tetrachloroethylene, trichloroethylene, and trichloromonofluoromethane (trichlorofluoromethane); F004 = cresols and nitrobenzene; F005 = 2-ethoxyethanol, 2-nitropropane, benzene, carbon disulfide, isobutanol, MEK, pyridine and toluene; and F006, F007, and F009 are assigned due to electroplating waste contamination.

h. SD – F001 = carbon tetrachloride, methylene chloride, tetrachloroethylene, 1,1,1-trichloroethane, trichloroethylene, trichlorofluoromethane and 1,1,2-trichloro-1,2,2-trifluorethane; F002 = methylene chloride, tetrachloroethylene, 1,1,1-trichloroethane, trichloroethylene, trichlorofluoromethane and 1,1,2-trichloro-1,2,2-trifluorethane, chlorobenzene, 1,2-dichlorobenzene, 1,1,2-trichloroethane; F004 = cresols and nitrobenzene;
F005 = benzene, carbon disulfide, isobutanol, 2-ethoxyethanol, methyl ethyl ketone, 2-nitropropane, pyridine and toluene; F006, F007 and F009 are assigned due to electroplating waste contamination.

i. LA – F001= 1,1,1-trichloroethane, 1,1,2-trichloro-1,2,2-trifluoroethane, carbon tetrachloride. methylene chloride, tetrachloroethylene, trichloroethylene, and trichlorofluoromethane; F002= 1,1,1-trichloroethane, 1,1,2-trichloro-1,2,2-trifluoroethane, chlorobenzene, methylene chloride, tetrachloroethylene, trichloroethylene, 1,1,2-trichloroethane, 1,2-dichlorobenzene and trichlorofluoromethane; F004= cresols, cresylic acid, and nitrobenzene; F005= Benzene, methyl ethyl ketone (2-butanone), pyridine, toluene, 2-ethoxyethanol, 2-nitropropane, carbon disulfide and isobutanol (isobutyl alcohol); F006, F007, F009= are assigned due to electroplating waste contamination

j. BN (product drum) – F001 = 1,1,1-trichloroethane, 1,1,2-trichloro-1,2,2-trifluoroethane, 1,1,2,2-tetrachloro-1,2-difluoroethane, carbon tetrachloride, methylene chloride, tetrachloroethylene, trichloroethylene and trichlorofluoromethane; F002 =1,1,1-trichloroethane, 1,1,2-trichloro-1,2,2-trifluoroethane; 1,1,2-trichloroethane, 1,2-dichlorobenzene, chlorobenzene, methylene chloride; tetrachloroethylene, trichloroethylene, and trichlorofluoromethane; F004 = cresols, cresylic acid, and nitrobenzene; F005 = 2-ethoxyethanol, 2-nitropropane, benzene, carbon disulfide, isobutanol, MEK, pyridine and toluene; and F006, F007, and F009 are assigned due to electroplating waste contamination.

1.7.2 Hazardous Determination

1.7.2.1 Hazardous Waste Management

The BN510.3 wastes are newly generated. Hazardous waste numbers initially (or historically) assigned to the Supercompactor feedstock wastes are applicable to the BN510.3 waste stream as a result of the RCRA mixture and the derived-from rules. [1]

1.7.2.1.1 Historical Waste Management

The wastes that comprise the BN510.3 waste stream have historically been managed as mixed TRU waste at the AMWTP. [1, 5]

1.7.2.2 Ignitability

The waste materials in this BN510.3 waste stream do not meet the 40 CFR 261.21, Characteristic of Ignitability, definition of ignitability. The resulting supercompacted debris waste is not a liquid waste and is not an ignitable waste. The current State of Idaho RCRA/HWMA Permit allows the AMWTP to process within the Supercompactor aerosol cans with less than or equal to 49 mL and excess liquids that do not exceed a maximum of 5% of the overall container capacity (volume must be confirmed by RTR). [31, 43, 59, 60, 65, 71] To render the waste acceptable at WIPP, containers identified as having ignitable waste properties or containing prohibited liquids will be:

(1) Treated using Aquaset®, Aquaset II-G®, Petroset II®, Petroset IIG®, Micro-Cel® E, PIG®, SP-400®, or Hg Absorb for mercury to make the waste amenable for offsite shipment [37, 38, 47, 48, 49, 51, 64] and/or

(2) Treated by the supercompaction process to remove the excess liquids; [31, 43, 59, 60, 65] or

(3) Undergo removal of the prohibited item(s). [9, 10, 53, 54, 60, 70]

The resulting supercompacted debris waste is not an ignitable waste. The compacted debris waste is not a liquid or a compressed gas and does not contain compressed gases. The waste does not meet the U.S. Department of Transportation definition of an oxidizer as defined in 49 CFR 173, Shippers–General Requirements for Shipments and Packagings. Finally, the waste is not capable of causing fire through friction, absorption of moisture, or spontaneous chemical change. Containers with prohibited liquids will not be shipped to WIPP. [37, 38, 47, 48, 49, 51, 64] Based on the above, this waste stream does not exhibit the characteristic of ignitability (D001).

1.7.2.3 Corrosivity

The materials in this BN510.3 waste stream do not meet the 40 CFR 261.22, Characteristic of Corrosivity, definition of corrosivity. The resulting supercompacted debris waste is not a liquid waste and is not a corrosive waste. The current State of Idaho RCRA/HWMA Permit allows the AMWTP to process within the Supercompactor aerosol cans with less than or equal to 49 mL and excess liquids that do not exceed a maximum of 5% of the overall container capacity, volume confirmed by RTR. [31, 43, 59, 60, 65, 71] To render the waste acceptable at WIPP, containers identified as having corrosive waste properties or containing prohibited liquids will be:

(1) Treated using Aquaset®, Aquaset II-G®, Petroset II®, Petroset IIG®, Micro-Cel® E, PIG®, SP-400® or Hg Absorb for mercury to make the waste amenable for offsite shipment [37, 38, 47, 48, 49, 51, 64]; and/or

(2) Treated by the supercompaction process to remove the excess liquids; [31, 43, 59, 60, 65] or

(3) Undergo removal of the prohibited item(s). [9, 10, 53, 54, 60, 70]

The resulting supercompacted debris waste is not liquid waste and will not contain liquids in excess of WIPP-WAC limits. Containers with WIPP-prohibited liquids will not be shipped. [37, 38, 41, 47, 48, 49, 51, 64] Based on the above, this waste stream does not exhibit the characteristic of corrosivity (D002).

1.7.2.4 Reactivity

The waste materials in this BN510.3 waste stream do not meet the 40 CFR 261.23, Characteristic of Reactivity, definition of reactivity. The resulting supercompacted debris waste is not a liquid waste and is not a reactive waste. The current State of Idaho RCRA/HWMA Permit allows the AMWTP to process within the Supercompactor aerosol cans with less than or equal to 49 mL and excess liquids that do not exceed a maximum of 5% of the overall container capacity, volume confirmed by RTR. [31, 43, 59, 60, 65, 71] To render the waste acceptable at WIPP, containers identified as having reactive waste properties or containing prohibited liquids will be:

(1) Treated using Aquaset®, Aquaset II-G®, Petroset II®, Petroset IIG®, Micro-Cel® E, PIG®, SP-400® or Hg Absorb for mercury to make the waste amenable for offsite shipment [37, 38, 47, 48, 49, 51, 64]; and/or

(2) Treated by the supercompaction process to remove the excess liquids; [31, 43, 60, 65] or

(3) Undergo removal of the prohibited item(s). [9, 10, 53, 54, 60, 70]

In addition, the BN510.3 waste stream is stable and will not undergo violent chemical change, react violently with water, form potentially explosive mixtures with water, or generate toxic gases, vapors, or fumes when mixed with water. The waste does not contain sulfide waste which, when exposed to a pH between 2 and 12.5, can generate toxic gases, vapors, or fumes in a quantity sufficient to present a danger to human health or the environment. The waste is not capable of detonation or explosive reaction if subjected to a strong initiating source if heated under confinement. The waste is not readily capable of detonation or explosive decomposition or reaction at standard temperature and pressure. The materials do not contain explosive material and are not forbidden explosives or Division 1.1, 1.2, or 1.3 (Class A or B) explosives as defined in 49 CFR 173. Although the waste contains wastes that are assigned F006, F007, and F009 listed HWNs that are associated with cyanide electroplating operations, the waste when exposed to a pH between 2 and 12.5 will not generate toxic gases, vapors, or fumes in a quantity sufficient to present a danger to human health or the environment. This waste stream does not exhibit the characteristic of reactivity (D003).

1.7.2.5 BN510.3 RCRA Toxicity, Listed and Toxic Substances Control Act (TSCA) Waste

1.7.2.5.1 Toxicity

The BN510.3 supercompacted debris waste stream contains RCRA toxicity constituents associated with toxicity characteristic metals and organics. [1, 5, 6, 7, 8, 28, 39, 40, 42, 52, 58, 72, 77, 82, 84, 85, 87, 90, 91] See Table 3 for process-related activities associated with the HWNs.

Table 3 identifies the HWNs and constituents associated with this waste stream, based on AK documentation. [82, 84, 85, 87, 90, 91]

The RCRA toxicity characteristic metal HWNs D004 (arsenic), D005 (barium), D006 (cadmium), D007 (chromium), D008 (lead), D009 (mercury), D010 (selenium), and D011 (silver) were associated with AE, AW, BC, BN, LA, MD, RF, and SD feedstock for the BN510.3 waste stream.[1, 5, 6, 7, 8, 30, 52, 58, 72, 77, 82, 84, 85, 87, 90, 91] The HWNs D004, D005, D006, D007, D008, D009, D010, and D011 are assigned to the BN510.3 waste stream. [1]

The HWN D018 (benzene) was associated with LA feedstock to the BN510.3 waste stream.[82] Because F-listed HWN F005 is assigned to the feedstock for this constituent, the D018 HWN is not assigned to the BN510.3 waste stream, but rather is addressed within the F-listed waste section below. [1]

The HWN D019 (carbon tetrachloride) was associated with AE, AW, and LA feedstock to the BN510.3 waste stream. [52, 58, 82, 90] Because F-listed HWN F001 is assigned to the feedstock for this constituent, the D019 HWN is not assigned to the BN510.3 waste stream, but rather is addressed within the F-listed waste section below. [1]

The HWN D021 (chlorobenzene) was associated with LA feedstock to the BN510.3 waste stream. [82] Because F-listed HWN F002 is assigned to the feedstock for this constituent, the

D021 HWN is not assigned to the BN510.3 waste stream, but rather is addressed within the F-listed waste section below. (1)

The HWN D022 (chloroform) was associated with AW, LA, MD, RF, and SD feedstock to the BN510.3 waste stream. (6, 7, 58, 72, 77, 82, 90) The HWN D022 is assigned to the waste stream. (1)

The HWN D026 (cresol) was associated with LA feedstock to the BN510.3 waste stream.(82) Because F-listed HWN F004 is assigned to the feedstock for this constituent, the D026 HWN is not assigned to the BN510.3 waste stream, but rather is addressed within the F-listed waste section below. (1)

The HWNs D027 (1,4-dichlorobenzene); D030 (2,4–dinitrotoluene); and D037 (pentachlorophenol) were associated with AE, AW, LA, and SD feedstock to the BN510.3 waste stream. (52, 58, 72, 77, 82, 90) The HWNs D027, D030, and D037 are assigned to the waste stream. (1)

The HWNs D028 (1,2-dichloroethane) and D029 (1,1-dichloroethylene) were associated with AE, AW, LA, RF, and SD feedstock to the BN510.3 waste stream. (6, 52, 58, 72, 77, 82, 90) The HWNs D028 and D029 are assigned to the waste stream. (1)

The HWNs D032 (hexachlorobenzene) and D034 (hexachloroethane) were associated with AW and SD feedstock to the BN510.3 waste stream. (58, 72, 77, 90) The HWNs D032 and D034 are assigned to the waste stream. (1)

The HWN D033 (hexachlorobutadiene) was associated with SD feedstock to the BN510.3 waste stream. (72, 77, 90) The HWN D033 is assigned to the waste stream. (1)

The HWN D035 (methyl ethyl ketone) was associated with LA feedstock to the BN510.3 waste stream.(82) Because F-listed HWN F005 is assigned to the feedstock for this constituent, the D035 HWN is not assigned to the BN510.3 waste stream, but rather is addressed within the F-listed waste section below. (1)

The HWN D038 (pyridine) was associated with LA feedstock to the BN510.3 waste stream.(82) Because F-listed HWN F005 is assigned to the feedstock for this constituent, the D038 HWN is not assigned to the BN510.3 waste stream, but rather is addressed within the F-listed waste section below. (1)

The HWN D039 (tetrachloroethylene) was associated with AW, MD, SD, and RF feedstock to the BN510.3 waste stream. (6, 7, 58, 72, 77, 90) Because F-listed HWN F001 is assigned to the feedstock for this constituent, the D039 HWN is not assigned to the BN510.3 waste stream, but rather is addressed within the F-listed waste section below. (1)

The HWN D040 (trichloroethylene) was associated with LA feedstock to the BN510.3 waste stream. (82) Because F-listed HWNs F001 and F002 are assigned to the feedstock for this constituent, the D040 HWN is not assigned to the BN510.3 waste stream, but rather is addressed within the F-listed waste section below. (1)

The HWN D043 (vinyl chloride) was associated with AW, LA, and SD feedstock to the BN510.3 waste stream.[58, 72, 77, 82, 90] The HWN D043 is assigned to the waste stream.[1]

1.7.2.5.2 Listed Waste

F-Listed HWNs. The BN510.3 supercompacted debris waste stream contains constituents associated with RCRA-listed waste HWNs. See Table 3 for process-related activities associated with the HWNs.

The BN510.3 debris waste stream is assigned the F-listed HWNs F001, F002, F004, F005, F006, F007, and F009 based on AK documentation. These F-listed HWNs were historically assigned to feedstock to the BN510.3 waste stream.[1, 5, 6, 15, 28, 30, 39, 40, 42, 52, 58, 72, 77, 80, 82]

The HWN F001 (1,1,1- trichloroethane, 1,1,2-trichloro-1,2,2-trifluoroethane, 1,1,2,2-tetrachloro-1,2-difluoroethane, carbon tetrachloride, methylene chloride, tetrachloroethylene, trichloroethylene, and trichlorofluoromethane) was associated with previous RL feedstock to the BN510.1 and AW, BC, LA, MD, SD, and RF feedstock to the BN510.3 waste stream.[5, 6, 7, 8, 28, 39, 40, 42, 58, 72, 77, 80, 82, 84, 85, 87, 90, 91] Therefore, the HWN F001 is assigned to the waste stream.[1]

The F002 hazardous waste constituents 1,1,1-trichloroethane; 1,1,2-trichloroethane; 1,1,2-trichloro-1,2,2-trifluoroethane; 1,2-dichlorobenzene; chlorobenzene; methylene chloride; tetrachloroethylene; trichloroethylene, and trichlorofluoromethane were associated with previous RL feedstock to the BN510.1, and AE, AW, BC, LA, MD, RF, and SD feedstock to the BN510.3 waste stream.[5, 6, 7, 8, 28, 39, 40, 42, 52, 58, 72, 77, 80, 82, 84, 85, 87, 90, 91] Therefore, the HWN F002 is assigned to the waste stream.[1]

Non-halogenated F003 solvent constituents (e.g., acetone, cyclohexanone, ethyl benzene, ethyl ether, methanol, methyl isobutyl ketone, n-butyl alcohol, and xylene) are associated with the Supercompactor feedstock debris waste. The BN510.3 waste stream does not exhibit the characteristic of ignitability. Therefore, the HWN F003 is not assigned to the supercompacted debris waste stream.[1]

The HWN F004 (cresols, cresylic acid, and nitrobenzene) was associated with RL feedstock to the BN510.1 waste stream and with the AE, AW, LA, and SD feedstock to the BN510.3 waste stream.[28, 39, 40, 52, 58, 72, 77, 80, 82, 90, 91] Therefore, the HWN F004 is assigned to the waste stream.[1]

The HWN F005 (2-ethoxyethanol, 2-nitropropane, benzene, carbon disulfide, isobutanol, MEK, pyridine, and toluene) was associated with AE, AW, BC, LA, MD, RF, and SD feedstock to the BN510.3 waste stream and RL feedstock to the BN510.1 waste stream.[5, 6, 7, 8, 28, 39, 40, 42, 52, 58, 72, 77, 80, 82, 90, 91] Therefore, the HWN F005 is assigned to the waste stream.[1]

The HWNs F006, F007, and F009 were associated with AW, RF, LA, and SD feedstock, and HWNs F007 and F009 were also associated with MD feedstock to the BN510.3 waste stream. [5, 6, 7, 15, 58, 72, 77, 80, 82, 90, 91] Therefore, the HWNs F006, F007, and F009 are assigned to the waste stream. [1]

P-, U-, and K-Listed HWNs. The BN510.3 supercompacted feedstock debris wastes in this waste stream are not discarded, unused, commercial chemical products, off-specification species, or manufacturing intermediates and do not contain spill residues thereof that would meet the listing of P- or U-listed hazardous waste as identified in 40 CFR 261.33, Discarded Commercial Chemical Products, off-Specification Species, Container Residues, and Spill Residues thereof. In addition, the waste materials in this waste stream were not mixed with, or derived from, the treatment, storage, or disposal of P- or U-listed waste. As a result, P- or U-listed HWNs are not assigned to this waste stream. [1, 5, 6, 7, 8, 28, 30, 39, 40, 42, 52, 58, 72, 77, 80, 82, 84, 85, 87, 90, 91]

Although hydrofluoric acid was identified as a chemical contaminant associated with the feedstock debris waste, only spent forms of hydrofluoric acid would have contaminated the feedstock debris waste. Based on this information, the U134 HWN is not assigned to this waste stream. [1, 5, 6, 7, 8, 28, 30, 39, 40, 42, 52, 58, 72, 77, 80, 82, 84, 85, 87, 90, 91]

Based on a review of AK, it was determined that the BN510.3 waste stream will contain less than one percent beryllium by weight. Beryllium is a contaminant associated with this waste. The source of the beryllium is not associated with a powdered form and is not associated with unused commercial chemical product, an off-specification species, or a container residue, and does not contain a spill residue thereof. The P015 HWN for beryllium powder is not assigned to this waste stream. [1, 5, 6, 7, 8, 28, 30, 39, 40, 42, 52, 72, 77, 80, 82, 84, 85, 87, 90, 91]

The waste materials within this waste stream are not hazardous waste from specific sources listed in 40 CFR 261.32, Hazardous Wastes from Specific Sources, (i.e., K-listed hazardous waste) and they have not been mixed with; derived from the treatment, storage, or disposal of K-listed wastes; and do not contain spill residues thereof. The waste materials in this waste stream are not assigned K-listed HWNs. [1, 5, 6, 7, 8, 28, 39, 40, 42, 52, 58, 72, 77, 80, 82, 84, 85, 87, 90, 91]

1.7.2.5.3 TSCA Waste

Polychlorinated biphenyl items with PCB concentrations equal to or exceeding 50 parts per million are not expected in the BN510.3 waste stream. Drums of PCB-contaminated Rocky Flats organic sludges are expected in the SD boxed debris waste. [6, 7, 8, 28, 30, 39, 42, 52, 72, 77, 80, 82, 84, 85, 87, 90, 91]

Drums of supercompacted feedstock debris waste identified during RTR/VE as containing PCB wastes may be placed into the box lines or may be segregated or sent to DWPG or SCW for item removal. [1, 9, 16, 29, 30, 54] PCB items and drums of PCB wastes identified in boxed debris are removed during box line operations. Potential PCB contaminated waste identified during box line repackaging is subject to AMWTP PCB cleanup requirements. [53]

PCB items removed from approved feedstock debris waste drums and boxes, drums of PCB sludges and/or soils, and potential PCB cleanup wastes are removed from the WMF-676 box lines and packaged as newly-generated waste. PCB items and sludge/soil waste are not authorized as feedstock debris waste.[77, 80, 90, 91]

Asbestos has been identified in some of the approved feedstock debris waste. Any containers identified as containing regulated types or quantities (e.g., greater than 1% of friable asbestos) will be labeled, as required, in accordance with TSCA and Occupational Safety and Health Administration regulations.

1.7.2.5.4 Other Applicable Waste Streams

The AMWTP BN510, BN510.1, and BN510.2 waste streams are pertinent to the BN510.3 waste stream. [30, 77, 80, 90, 91]

The EPA HWNs assigned to the BN510 waste stream included D004 through D011, D022, D028, D029, F001, F002, F005, F006, F007, and F009. [30]

The EPA HWNs assigned to BN510.1 include D004 through D011, D022, D027, D028, D029, D030, D034, D037, D043, F001, F002, F004, F005, F006, F007, and F009. [80, 91]

The EPA HWNs assigned to BN510.2 include D004 through D011, D022, D027, D028, D029, D030, D032, D034, D037, D043, F001, F002, F004, F005, F006, F007, and F009. [77]

The EPA HWNs assigned to BN510.3 include D004 through D011, D022, D027, D028, D029, D030, D032, D033, D034, D037, D043, F001, F002, F004, F005, F006, F007, and F009. [90]

1.8 Radionuclides

The radionuclides of concern for BN510.3 are ^{238}Pu, ^{239}Pu, ^{240}Pu, ^{242}Pu, ^{233}U, ^{234}U, ^{238}U, and ^{241}Am. The remaining WIPP-tracked radionuclides, ^{137}Cs and ^{90}Sr, are not expected to be present in measurable quantities in feedstock debris waste from RF except for IDC RF-480, due to disposal of isotopic sealed source material. Cesium-137 and computed ^{90}Sr are anticipated radionuclides for IDC RF-480 feedstock and may be detected during non-destructive assay (NDA). Cesium-137 and ^{90}Sr were identified as potentially present in AE, MD, BC, LA, SD, and AW debris waste. [6, 7, 8, 13, 50, 52, 58, 72, 82]

At a minimum, the ratios of the two most prevalent radionuclides in the isotopic mix are compared to confirm existing AK data in compliance with CH-WAC requirements. The two most prevalent radionuclides expected in the waste stream are ^{239}Pu and ^{240}Pu. This is based on a review of product drums included in the BN510.1 waste stream; however, the prevalent radioisotopes in some containers of the waste may be a combination of ^{239}Pu and a different second TRU or uranium isotope, due to commingling of wastes.

Table 4 identifies the predominant radionuclides and the principle source of those radionuclides for each of the original generators and for the BN510.3 wastes. [6, 7, 8, 13, 50, 52, 58, 72] For waste containers that have multiple generators and therefore a mixture of weapons grade plutonium (WG Pu), enriched uranium (EU), depleted uranium (DU), heat source isotopes, and fuel grade plutonium, a combination of any two of the common isotopes identified may be detected as the most prevalent. Although the waste stream contains depleted uranium in the feedstock material, the weight of uranium within the overall feedstock material will be less than 1% by weight. Radioassay data are reviewed and assessed by AMWTP NDA personnel as described in the RPT-TRUW-03, Drum Assay Technical Review Report. [14]

The radioisotopic content for each AMWTP supercompacted debris waste 100-gallon product drum will be calculated based on the aggregate of the NDA results for each of the compacted feedstock debris waste drums contained therein. The POS is used to ensure that each payload container does not exceed WAC weight or dose limits and complies with the required TRU activity (greater than 100 nCi/g). The direct feed 55-gallon drums will contain at least one TRU radionuclide greater than the lower limit of detection (LLD). The 100-gallon product drums that contain puck(s) with TRU radionuclides at less than LLD from the box line feed, as determined by 55-gallon drum assay, are assayed using the Super HENC (high energy neutron counter) for final TRU determination.

Table 4. Predominant radionuclides expected in debris wastes by generator site. [6, 7, 8, 13, 50, 52, 58, 72, 82]

Generator Site	Principal Plutonium Source	Predominant Radionuclides by Activity
RF	WG	^{239}Pu, ^{240}Pu
RF	WG, DU, EU	^{239}Pu (^{235}U or ^{238}U)
MD	WG	^{239}Pu, ^{240}Pu
MD	Heat source	^{238}Pu, ^{239}Pu
BC	WG	^{239}Pu, ^{240}Pu
AE	Combination WG Pu, fuels-grade Pu	^{241}Pu, ^{239}Pu
AW	Combination WG Pu, fuels-grade Pu	^{241}Am, ^{241}Pu
SD	Combination WG Pu, heat source Pu, uranium, thorium, fuels-grade Pu, DU, EU	^{241}Am, ^{241}Pu
LA	Combination WG Pu, heat source Pu, fuels-grade Pu, reactor-grade Pu, enriched ^{242}Pu	^{241}Pu, ^{238}Pu
BN	WG (RF waste)	^{239}Pu, ^{240}Pu
BN	Combination WG Pu, heat source Pu	^{238}Pu, ^{239}Pu
BN	Combination WG Pu, heat source Pu, uranium, thorium, fuels-grade Pu	^{239}Pu (^{240} Pu, ^{241}Pu, ^{238}Pu, ^{241}Am, ^{235}U or ^{238}U)

2.0 SHIPPING CONSIDERATIONS

2.1 Waste Packaging

2.1.1 Direct-Load of 100-gallon Supercompacted Debris Waste Containers Into TRUPACTs

The BN510.3 waste stream consists of supercompacted drums of debris waste (pucks) placed directly into 100-gallon product drums. There are no inner packagings or layers of confinement associated with the 100-gallon product drums. There is a filtered lid on the 100-gallon drums. If 100-gallon drums become damaged, they are packaged into SWBs for shipment to WIPP. [9, 17, 70]

2.2 Flammability Consideration

The payload containers in the BN510.3 waste stream must comply with the Contact-Handled Transuranic Waste Authorized Methods for Payload Control (CH-TRAMPAC) requirements. As specified in the CH-TRAMPAC, a determination of compliance with the flammable gas limits will be performed for volatile organic compounds (VOCs), hydrogen, and methane. Headspace gas (HSG) sampling and analysis is performed when required by the WIPP-Waste Acceptance Plan and/or CH-TRAMPAC. At a minimum, the HSG analytical results are evaluated to determine the total concentration of flammable VOCs present in the waste. Payload containers, including those with HSG results exceeding 500 parts per million flammable VOCs, are evaluated for compliance with applicable CH-TRAMPAC requirements prior to shipment. Payloads containing flammable VOCs are managed in accordance with CCP-PO-003, CCP Transuranic Authorized Methods for Payload Control (CCP CH-TRAMPAC). [25]

3.0 REFERENCES

NOTE: *Advanced Mixed Waste Treatment Project documents such as procedures, AK reports, and operating instructions, are cited without revision numbers or dates. The most recent revisions of these documents are available through the AMWTP Electronic Document Management System (EDMS). Previous revisions are available on EDMS.*

1. RPT-TRUW-12, AMWTP Waste Stream Designations, current revision

2. DOE/WIPP 01-3194, CH-TRU Waste Content Codes (CH-TRUCON)

3. DOE/LLW-217, DOE Waste Treatability Group Guidance, 1995 [P670A]

4. MP-TRUW-8.1, Certification Plan for INL Transuranic Waste, current revision

5. RPT-TRUW-06, Acceptable Knowledge Document for AMWTP Waste, current revision

6. RPT-TRUW-56, Acceptable Knowledge Document for INL Stored Transuranic Waste – Rocky Flats Plant, current revision

7. RPT-TRUW-13, Acceptable Knowledge Document for INL Stored Transuranic Waste – Mound Plant Waste, current revision

8. RPT-TRUW-04, Acceptable Knowledge Document for the Battelle Columbus Laboratories Building JN-4 Plutonium Laboratory, current revision

9. INST-FOI-20, Supercompactor and Post-Compaction Operations, current revision

10. INST-FOI-17, Facility Visual Examination Operations, current revision

11. DOE/WIPP-02-3122, Transuranic Waste Acceptance Criteria for the Waste Isolation Pilot Plant [P2003A]

12. MP-TRUW-8.13, Collection, Review, and Management of Acceptable Knowledge Documentation, current revision

13. RPT-TRUW-07, Determination of Radioisotopic Content in TRU Waste Based on Acceptable Knowledge, current revision

14. RPT-TRUW-03, Drum Assay Technical Review Report, current revision

15. Rocky Flats Environmental Technology Site Backlog Waste Reassessment Baseline Book, May 5, 1994-March 5 2001 [P052A]

16. Summary of PCB AK Sources, Wastren, Inc., September 5, 2001. [C207A]

17. INST-OI-24, Packaging Radioactive Waste, current revision

18. Correspondence from DOE Carlsbad Area Office to J.M. Roberson, RFFO, and J.M. Wilcynski, INEEL, Identification of Defense Waste Streams Generated at Rocky Flats Environmental Technology Site (RFETS), May 20, 1997 [C191A]

19. Operable Unit 9 Site Scoping Report: Volume 7 – Waste Management, February 1993 [P380A]

20. Interview of J.B. Williamson, BCL, regarding Historical Operations Conducted in JN-4, September 2000 [C258A]

21. Interview of David Freas, BCL, regarding Historical Operations in Building JN-4, September 2000 [C259A]

22. Interview of William Pardue, BCL, regarding Historical Operations in Building JN-4, October 2000 [C260A]

23. DOE, Interim Guidance on Ensuring that Waste Qualifies for Disposal at the Waste Isolation Pilot Plant, 1997 [P203A]

24. Correspondence from Frank Marcinowski to EM-13 (Stan Wolf, 301-903-7962), Process for TRU Waste Defense Determination, February 2005 [C329A]

25. CCP-PO-003, CCP Transuranic Authorized Methods for Payload Control (CCP CH-TRAMPAC), Central Characterization Project [P672A]

26. MP-TRUW-8.2, Quality Assurance Project Plan, current revision

27. DOE/TRU-13-3425, Annual Transuranic Waste Inventory Report - 2013 [P2023A]

28. RPT-TRUW-82, Acceptable Knowledge Document for Hanford Debris Waste Shipped to AMWTP

29. INST-FOI-23, Special Case Waste Operations, current revision

30. RPT-TRUW-30, Acceptable Knowledge Summary for Supercompacted Debris Waste (BN510) [P439A]

31. INST-OI-12, Real-Time Radiography Examinations (Certification Scans), current revision

32. INST-OI-34, Non-Facility Visual Examination Operations, current revision

33. INST-FOI-01, In-Plant Drum Assay Operations, current revision

34. INST-OI-14, Drum Assay Operations, current revision

35. RPT-TRUW-05, Waste Matrix Code Reference Manual, current revision

36. Correspondence from the EPA to Donald C. Cadbury, National TRU Program CBFO, June 10, 2010 [C869S]

37. Material Safety Data Sheet, Micro-Cel®E, Celite Corporation, January 17, 2007 [P808S]

38. Material Safety Data Sheets, Aquaset® (sodium montmorillonite) and Aquaset II-G® (sepiolite), Fluid Tech, January 1, 2005, and November 11, 2008 [P881S]

39. CCP-PK-RL-101, Central Characterization Project Process Knowledge Summary Report for Hanford Plutonium Finishing Plant Contact-Handled Transuranic Debris Waste, 85-Gallon Overpacked Drums, Waste Stream MPFPDD, Rev. 2, June 4, 2010 [P853A]

40. CCP-PK-RL-102, Central Characterization Project Process Knowledge Summary Report For The Hanford 325 Building Radiochemical Processing Laboratory Contact-Handled Transuranic Debris Waste, 85-Gallon Overpacked Drums, Waste Stream RLM325D.001, Rev. 2, June 4, 2010 [P854A]

41. DOE M 435.1, DOE Radioactive Waste Management Manual [P1183A]

42. CCP-PK-RL-103, Central Characterization Project Process Knowledge Summary Report For Hanford 231-Z building Contact Handled Transuranic Debris Waste, 85-Gallon Overpacked Drums, Waste Stream RLM231ZD.001, Rev. 2, June 4, 2010 [P855A]

43. ID489008952, AMWTP HWMA/RCRA Permit and interim status documents

44. Resource Conservation and Recovery Act, 40 CFR Parts 260 through 280

45. TV-009-13, Memorandum to File, Updated Waste Material Parameter Weight per Unit of Waste Calculations for the BN510.3 Supercompacted Debris Waste Stream, September 30, 2013. [C1325A]

46. Nuclear Waste Policy Act of 1982, 1982 [P757A]

47. Material Safety Data Sheets for Universal PIG® Absorbents (MSD-014) New Pig Corp., October 10, 2011 [P1376S]

48. Material Safety Data Sheets for Oil-Only PIG® Absorbents (MSD-016) New Pig Corp., August 3, 2011 [P1377S]

49. Material Safety Data Sheets for BLUE PIG® Sock Absorbents (MSD-029) New Pig Corp., February 9, 2011 [P1378S]

50. Box 10130773 and NCR# 72914, AMWTP, October 3, 2012 [C1066S]

51. Material Safety Data Sheets for Water Works SP-400 Absorbent (MSDS-1252), Water Works America Inc., August 23, 2012 [P1432S]

52. RPT-TRUW-89, Acceptable Knowledge Document for Argonne National Laboratory-East Waste, current revision

53. RPT-ESH-079, Advanced Mixed Waste Treatment Facility Box Line PCB Management Plan, current revision [P1827A]

54. INST-FOI-28, Cleaning and Packaging of Dust/Debris/Material from 1st Floor Cells in WMF-676, current revision

55. INST-FOI-37, Box Line Quarterly Cleanout, current revision

56. INST-OI-09, Retrieval Inspection Station Operations, current revision

57. MP-TRUW-8.45, Virtual Overpack Process and Planning, current revision

58. RPT-TRUW-79, Acceptable Knowledge Document for Materials and Fuels Complex Waste, current revision

59. EDF-0783, Deflagration Analysis of Aerosol Can Propellant in the Supercompactor Glovebox. [P1829A]

60. INST-TRUW-8.13.1, TRU Programs Site Project Office Process, current revision

61. Advanced Mixed Waste Treatment Project Defense Determination Evaluation for Argonne National Laboratory-East Debris Wastes Proposed for Inclusion into the Supercompactor Feedstock (i.e., BN-508) – TV-003-13 [C1277A]

62. Revised Advanced Mixed Waste Treatment Project Defense Determination Evaluation for Materials and Fuels Complex Debris Wastes Proposed for Inclusion into the Supercompactor Feedstock (i.e., BN-508) – TV-002-13 [C1276A]

63. Public Law 102-579, WIPP Land Withdrawal Act, U.S. Congress, October 1992 [P1674A]

64. Material Safety Data Sheet for Hg Absorb® (MSDS-560) Lab Safety Supply, Inc., May 19, 2001 [P1398S]

65. RPT-82, Supercompactor Liquid Treatment Capabilities, Evaluation and Conclusion [P859S]

66. EPA Docket No. A-98-49: II-A4-169, Waste Characterization Tier 1 Change Report, Addition of Contact-Handled Transuranic Waste to The Advanced Mixed Waste Treatment Project Approved Program: S3000 and S5000 Waste From Argonne National Laboratory-East and S5000 Waste from Idaho National Laboratory Materials And Fuels Complex, U.S. EPA, January 20, 2013 [C1284A]

67. INST-OI-15, Box Assay Operations, current revision [P1857S]

68. INST FOI 32, Size Reduction of Large Items, current revision

69. INST-OI-65, Standard Waste Box Direct Loading, current revision [P1850S]

70. INST-FOI-16, Box line Operations, current revision

71. LST-EC&P-11, AMWTP HWMA/RCRA Permit WMF-676 Waste Management Criteria, current revision

72. RPT-TRUW-91, Acceptable Knowledge Document for Pre-1980 INL-Exhumed SDA Waste, current revision

73. EPA Docket No. A-98-49; II-A4-174, Waste characterization Tier 1 Change Report: Addition Of Contact-Handled Transuranic Waste To The Advanced Mixed Waste Treatment Project Approved Program: Pre-1980 INL-Exhumed Subsurface Disposal Area Summary Category Group S3000 And S5000 Waste, United States Environmental Protection Agency, May 01, 2013. [C1306A]

74. EPA Tier approval letter for RPT-TRUW-91 SDA, United States Environmental Protection Agency, July 9, 2013 [C1307A]

75. INST-FOI-21, Drummed Waste Handling Operations, current revision

76. Defense/Non-Defense and Waste Isolation Pilot Plant Land Withdrawal Act Evaluation for Pre-1980 Idaho National Land Exhumed Subsurface Disposal Area Wastes, AMWTP, July 13, 2013 [C1310A]

77. RPT-TRUW-83, Acceptable Knowledge Summary for Supercompacted Debris Waste, Rev. 6, September 9, 2013 [P1996A]

78. TV-008-13, Memorandum to File, Waste Volume Estimates BN510.3 Supercompacted Debris Waste Stream, September 30, 2013 [C1329S]

79. E-mail correspondence from AMWTP Production Planning (available in EDMS), September 19, 2013 [C1328S]

80. RPT-TRUW-83, Acceptable Knowledge Summary for Supercompacted Debris Waste (BN510.1), Rev. 0, September 10, 2010 [P2010A]

81. CCP-AK-INL-001, Central Characterization Program, Acceptable Knowledge Summary Report for Waste Retrieved from Designated Areas Within the Subsurface Disposal Area at the Idaho National Laboratory

82. RPT-TRUW-93, Acceptable Knowledge Documents for Los Alamos National Laboratory Debris, current revision.

83. TV-010-13, Memo to file, Defense/non-defense and WIPP Land Withdrawal Act Evaluation for Los Alamos National Laboratory (LANL) debris wastes, AMWTP, October 16, 2013.[C1313A]

84. Form-1900, AMWTP Offsite Waste Stream Profile Form for LANL LA-MHD04.001, AMWTP, September 12, 2013. [P1999A]

85. Form-1900, AMWTP Offsite Waste Stream Profile Form for LANL LA-MHD09.001, September 12, 2013. [P2001A]

86. Discrepancy resolution for EDF-0783 and EDF-0768, AMWTP, February 28, 2013. [D109A]

87. Form-1900, AMWTP Offsite Waste Stream Profile Form for LANL LA-MHD01.001, AMWTP, September 12, 2013. [P1998A]

88. JAV-001-13, BN510.3 waste volume estimates for LANL inclusion into the Supercompacted Debris Waste Stream, AMWTP, December 2, 2013.[C1323A]

89. EPA Tier 1 approval letter for LANL debris waste as supercompactor feedstock, EPA, September 16, 2013. [C1327A]

90. RPT-TRUW-83, Acceptable Knowledge Summary for Supercompacted Debris Waste, Rev. 7, December 3, 2013 [P2008A]

91. RPT-TRUW-83, Acceptable Knowledge Summary for Supercompacted Debris Waste (BN510.1), Rev. 0, September 10, 2010, and Rev. 3, February 7, 2013.[P2010A]

92. TV-012-13, Waste material parameter evaluation for inclusion of LANL debris into the BN510.3 Supercompacted Debris Waste Stream, AMWTP, December 2, 2013. [C1334A]

Appendix A – Approved Feedstock Debris Waste by Original Generator and IDC

The following table lists the approved feedstock debris waste by original generator and IDC. (30, 77, 80, 90, 91)

Waste Type	Site	IDC	Description
COMBUSTIBLES	RF	010	Paper and Rags
	RF	020	Wood and Benelex
	RF	030	Plastic
	RF	040	Rubber
	RF	33A	WIPP Experimental Test Program (WETP) Bin Program-Combustibles A (IDCs 335, 336, 337, and 339)
	RF	33B	WETP Bin Program – Combustibles B (IDCs 330, 337, and 339)
	RF	302	Benelex® and Plexiglas®
	RF	330	Paper and Rags-Dry
	RF	336	Paper and Rags-Moist
	RF	337	Plastic, Teflon®, Washables, PVC
	RF	339	Leaded Rubber Gloves and Aprons
	RF	430	Unleached Ion Column Resin
	RF	431	Leached Resin
	RF	460	Washables, Rubber, Plastic
	RF	463	Leaded Rubber Gloves and Aprons
	RF	464	Benelex® and Plexiglas®
	RF	833	Plastics, TRU Mixed
	RF	831	Dry Combustibles
	RF	832	Wet Combustibles
	RF	900	Low Specific Activity (LSA) Paper, Plastics, etc.
	RF	970	Wood

Waste Type	Site	IDC	Description
FILTERS	RF	328	Ful-Flo® Incinerator Filters
	RF	335	Absolute 8 × 8 Filters
	RF	338	Insulation and Chemical Warfare Service (CWS) Filter Media
	RF	360	Insulation
	RF	376	Cemented Insulation and Filter Media
	RF	490	High-Efficiency Particulate Air Filters and CWS Filters
	RF	491	Plenum Prefilters
GRAPHITE	RF	070	Graphite
	RF	300	Graphite Molds
	RF	301	Graphite Cores
	RF	303	Scarfed Graphite Chunks
	RF	310	Graphite Scarfings
	RF	312	Coarse Graphite

Waste Type	Site	IDC	Description
HETEROGENEOUS	AE	100	General Plant Waste
	AE	101	Cut up Gloveboxes
	AE	104	Alpha Hot Cell Waste
	AE	106	Special Source Material
	AE	110	Research Generated Waste
	AE	120	D and D Waste Compactable and Combustible Solids
	AW	150	Laboratory Waste
	AW	160	AL/CL Debris Waste
	AW	161	ACL Glassware, Paper, Poly, and Misc.
	AW	162	ANL-W FMF EFL Zr-U-Pu Fuel Cast
	AW	163	ANL-W ACL Cold-Line Ab. Liq. and Debris
	AW	164	ANL-W HRA/WCA Debris
	AW	165	Ash Stabilization and GGE Debris
	AW	167	MFC CH-TRU Heterogeneous Debris
	BC	201	Noncombustible Solids
	BC	202	Combustible Solids-Paper/Cloth
	BN	508	AMWTP Newly Generated Debris
	BN	510	Supercompacted Debris
	BN	550	Supercompacted Debris (BN510.1)
	LA	007	Mixed Heterogeneous Debris from TA-55
	LA	009	Heterogeneous Debris from the TA-21 DP West Facility
	LA	010	Heterogeneous Debris Waste from TA-50
	MD	801	Rags, Paper, Wood, etc.
	MD	802	Dry Box Gloves and O-Rings
	MD	803	Metal, Equipment, Pipe, Valves, etc.
	MD	804	Plastic, Tygon®, Mani-Boots, etc.
	MD	805	Asbestos Filters
	MD	810	Glass, Flasks, Sample Vials, etc.
	MD	813	Glass Filters and Fiberglass
	MD	814	Graphite Waste
	MD	824	Equipment Boxes, Noncombustible
	MD	825	Equipment Drums, Noncombustible

Waste Type	Site	IDC	Description
	MD	826	Equipment Boxes, Combustible
	MD	827	Equipment Drums, Combustible
	MD	838	<10 nCi/g Non-combustible
	MD	847	LSA <100 nCi/g Combustible
	MD	848	LSA <100 nCi/g Noncombustible
	RF	241	Americium Process Residue
	RF	372	Grit
	RF	374	Blacktop, Concrete, Dirt, and Sand
	RF	750	Pits 11 and 12 Debris
	RF	760	Pad 1 Cells 1 and 2 RF Debris
	RF	950	LSA Metal, Glass, etc.
	RF	960	Concrete, Asphalt, etc.
	SD	177	Pre-1980 INL-Exhumed SDA Heterogeneous Debris

Waste Type	Site	IDC	Description
INORGANIC NON-METAL	RF	060	Glass
	RF	440	Glass
	RF	441	Raschig Rings, Unleached
	RF	442	Raschig Rings, Leached
	RF	44A	WETP Bin Program – Glass (IDCs 440 and 442)
	RF	368	Magnesium Oxide Crucibles
	RF	370	LECO Crucibles
	RF	371	Fire Brick
	RF	377	Coarse Fire Brick
	RF	391	Crucibles and Sand
	RF	392	Sand, Slag, and Crucible
LEAD/CADMIUM METAL	RF	488	Glovebox Parts w/Lead
UNCATEGORIZED METAL	RF	050	Metal Scrap
	RF	48A	WETP Bin Program – Metals (IDCs 480 and 481)
	RF	320	Heavy Non-special Source Metal
	RF	321	Lead
	RF	416	Zinc Magnesium Alloy Metals
	RF	480	Scrap Metal (Non SS)
	RF	481	Leached Metals (Non SS)

Waste Stream or Waste Type Description: Supercompacted Debris

Waste Stream or IDC Number: BN510.3

AK Information	AK#<1>	Source Document Reference Number
Generator site TRU waste stream (WS) - specific information		
Information identifying the building(s) and/or area (s) from which TRU waste was or is generated.	WS1	C018A, C047A, C048A, C053A, C067A, C072A, C074A, C082A, C087A, C1015A, C1025A, C1029A, C102A, C1035A, C1036A, C1041A, C1042A, C1051A, C1052A, C1054S, C1055S, C1073A, C1076A, C1080A, C1081S, C1082A, C1085A, C1087S, C1089A, C1091S, C1093A, C1116S, C1118S, C1120S, C1121S, C1122A, C1125S, C1126S, C1127S, C1128S, C1129S, C1138S, C115A, C1169S, C1215S, C1216S, C1217S, C1218S, C1219S, C1221S, C1235S, C1237S, C1239S, C1240S, C1242S, C1243S, C1265S, C1266S, C1267S, C1268S, C1271S, C1280A, C1281A, C1284A, C1309A, C1317S, C1325A, C1326A, C1347A, C1348S, C1349A, C1361S, C155A, C162A, C170A, C171A, C182A, C184A, C185A, C254A, C289A, C295A, C296A, C299A, C320A, C322A, C344A, C351A, C358A, C375A, C378A, C381A, C385A, C386A, C387A, C388A, C389A, C390A, C391A, C393A, C394A, C395A, C396A, C397A, C398A, C399A, C400A, C401A, C402A, C403A, C405A, C406A, C408A, C409A, C410A, C412A, C413A, C414A, C417A, C418A, C419A, C420A, C421A, C422A, C423A, C424A, C425A, C429A, C430A, C431A, C433A, C434A, C435A, C436A, C437A, C438A, C439A, C443A, C444A, C445A, C446A, C447A, C448A, C449A, C450A, C458A, C461A, C462A, C463A, C464A, C465A, C466A, C467A, C468A, C470A, C472A, C473A, C478A, C486A, C488A, C490A, C491A, C522A, C533A, C557A, C574S, C576S, C579A, C580A, C603A, C618A, C789S, C822S, C842S, C852A, C865A, C869S, D007A, D023A, D029A, D030A, D061A, D094A, D096A, D099S, D100A, D107A, D108S, D109A, P001A, P006A, P012A, P014A, P016A, P024A, P035A, P037A, P038A, P049A, P052A, P058A, P060A, P061A, P062A, P067A, P076A, P079A, P082A, P083A, P090A, P097A, P098A, P1030A, P1031A, P104A, P109A, P113A, P117A, P127A, P1319A, P1320A, P1322A, P1353A, P1365A, P1366A, P1379A, P1380A, P1381A, P1382A, P1384S, P1385S, P1387S, P1388A, P1389A, P1391A, P1392A, P1393A, P1396S, P1403S, P1405A, P1417A, P1418A, P1419A, P1466S, P1472S, P1473A, P1483A, P1489S, P1496S, P1498S, P1501S,

Information identifying the building(s) and/or area (s) from which TRU waste was or is generated.	WS1	P1502S, P1514S, P1537A, P153A, P1540S, P1541S, P1547S, P1548A, P1549A, P1554S, P1557S, P1558S, P1560S, P1561S, P1563S, P1565S, P1570S, P1588S, P1591S, P1635S, P164A, P1655S, P1658S, P1672S, P167A, P1685S, P1704S, P1723S, P1724S, P1725S, P1726S, P1727S, P1742S, P1770A, P1771S, P1775S, P1776S, P1779S, P1781S, P1783S, P1795S, P1797S, P1799S, P1801S, P1802S, P1803S, P1804S, P1806S, P1810S, P1811S, P1812S, P1813S, P1814S, P1815S, P1823A, P1825A, P1826A, P1827A, P1829A, P1830A, P1839A, P1840A, P1841A, P1842A, P1843A, P1847S, P1850S, P1851A, P1852A, P1853A, P1854A, P1855A, P1864A, P1871S, P1984S, P1985S, P1987A, P1988A, P198A, P1996A, P1998A, P1999A, P2001A, P2002A, P2008A, P2010A, P2025A, P2043S, P2044S, P2054S, P2064S, P221A, P222A, P223A, P224A, P225A, P312A, P319A, P328A, P333A, P335A, P336A, P345A, P347A, P350A, P351A, P352A, P357A, P368A, P369A, P370A, P380A, P381A, P385A, P400A, P405A, P414A, P417A, P418A, P423A, P435S, P439A, P442A, P443A, P444A, P448A, P449A, P450A, P451A, P452A, P453A, P454A, P455A, P456A, P460A, P461A, P462A, P463A, P469A, P475A, P477A, P478A, P479A, P480A, P481A, P482A, P484A, P485A, P486A, P487A, P489A, P490A, P491A, P492A, P493A, P498A, P499A, P501A, P503A, P504A, P505A, P506A, P507A, P509A, P510A, P511A, P512A, P516A, P517A, P518A, P519A, P520A, P522A, P523A, P524A, P525A, P526A, P527A, P540A, P544A, P545A, P546A, P550A, P551A, P593A, P594A, P599A, P604A, P610A, P621A, P632A, P633A, P635A, P636A, P637A, P638A, P649A, P658A, P659A, P662A, P667A, P671S, P673A, P679A, P680A, P683S, P689A, P699A, P700S, P703A, P708A, P709A, P710A, P711A, P712A, P715A, P717A, P723S, P728A, P733S, P736A, P741A, P744A, P746A, P751A, P755A, P759S, P816A, P834A, P840A, P842A, P850A, P861A, P888A, P890A, P953A, U013A, U032A, U043A, U047A, U052A, U056A, U059A, U069A, U077A, U126A, U139A, U141A, U145A, U146A, U148A, U151A, U153A, U154A, U155A, U156A, U157A, U158A, U159A, U160A, U161A, U162A, U168A, U169A, U173A, U187A, U190A, U195A, U198A, U202A, U203A, U204A, U207A, U215A, U223A, U224A, U225A, U237S, U313S, U314S, U330S, U333A, U340A, U343S, U346S, U351S, U352S, U353S, U361S, U378S, U381S, U385S, U386S, U391S, U393S, U394S, U416S, U418S, U419S, U420S, U421S, U442A

Waste stream volume and time period of generation.	WS2	C048A, C072A, C1015A, C1023A, C1045A, C1051A, C1054S, C1069A, C1071S, C1081S, C1089A, C1090S, C1118S, C1130A, C1146S, C1161S, C118A, C1196S, C1202S, C1223S, C1225S, C1226S, C1231S, C1235S, C1239S, C1242S, C1243S, C1265S, C1266S, C1267S, C1282S, C1309A, C1323A, C1328S, C1329S, C1330A, C1347A, C1352S, C1354S, C254A, C267A, C289A, C292A, C294A, C295A, C296A, C322A, C348A, C359A, C372A, C375A, C379A, C424A, C461A, C463A, C465A, C467A, C472A, C485A, C499A, C507A, C522A, C526A, C534A, C535A, C543S, C557A, C574S, C576S, C579A, C580A, C603A, C620A, C842S, C850A, C851A, C855A, C856A, C861A, C864S, C865A, C869S, C875S, C946S, D029A, D030A, D040A, D061A, D099S, D107A, P024A, P052A, P061A, P090A, P1030A, P1031A, P1101A, P1109A, P113A, P127A, P1351A, P1365A, P1366A, P1374A, P1379A, P1380A, P1381A, P1382A, P1403S, P1417A, P1473A, P1483A, P1517S, P153A, P1563S, P1565S, P1621S, P164A, P1655S, P1675S, P1677S, P1678S, P1683S, P1686S, P1687S, P1725S, P1726S, P1727S, P1741S, P1742S, P1743S, P1793S, P1797S, P1804S, P1806S, P1819A, P1823A, P1825A, P1826A, P1839A, P1840A, P1841A, P1842A, P1843A, P1847S, P1851A, P1852A, P1853A, P1854A, P1855A, P1864A, P1987A, P1988A, P1996A, P1998A, P1999A, P2000A, P2001A, P2002A, P2008A, P2010A, P2023A, P2025A, P205A, P221A, P222A, P223A, P224A, P225A, P237A, P246A, P318A, P319A, P328A, P333A, P354A, P357A, P364A, P365A, P368A, P380A, P395A, P400A, P417A, P418A, P439A, P442A, P443A, P461A, P462A, P469A, P482A, P486A, P487A, P498A, P499A, P501A, P505A, P506A, P507A, P509A, P511A, P517A, P519A, P522A, P523A, P524A, P567A, P593A, P604A, P610A, P621A, P632A, P633A, P635A, P636A, P637A, P638A, P649A, P656A, P658A, P659A, P662A, P671S, P673A, P680A, P708A, P709A, P710A, P711A, P712A, P715A, P717A, P728A, P743A, P744A, P746A, P751A, P754A, P755A, P758A, P759S, P826A, P838A, P840A, P842A, P850A, P861A, P888A, P890A, U022A, U059A, U069A, U122A, U126A, U127A, U139A, U141A, U142A, U146A, U148A, U154A, U159A, U166A, U187A, U197A, U198A, U202A, U207A, U215A, U218A, U223A, U224A, U225A, U227S, U228S, U229S, U235S, U236S, U237S, U306S, U325S, U330S, U333A, U339S, U343S, U344S, U345S, U351S, U353S, U370S, U374S, U375S, U385S, U386S, U391S, U416S

Waste generating process description for each building, including processes with U134 waste generation, if applicable and process flow diagrams. See instructions if process flow diagrams are not available.	WS3	C005A, C008A, C014A, C018A, C047A, C050A, C053A, C061A, C082A, C087A, C100A, C1029A, C1035A, C1040S, C1041A, C1042A, C1051A, C1080A, C1082A, C1086S, C1087S, C1091S, C1093A, C1118S, C1120S, C1121S, C1122A, C1133S, C1144S, C1147S, C115A, C1160S, C1161S, C1164S, C1165S, C1168S, C1170S, C1180S, C1196S, C1197S, C1202S, C1208S, C1213S, C1217S, C1219S, C1221S, C1230S, C1239S, C1240S, C1244S, C1260S, C1265S, C1266S, C1267S, C1268S, C1269S, C1270S, C1271S, C1280A, C1281A, C1347A, C1348S, C171A, C175A, C180A, C181A, C184A, C185A, C254A, C257A, C258A, C260A, C444A, C458A, C466A, C473A, C481A, C574S, C587A, C852A, D037A, D087S, D096A, D099S, D107A, D109A, P001A, P012A, P014A, P015A, P016A, P024A, P035A, P037A, P038A, P039A, P049A, P052A, P053A, P055A, P056A, P058A, P059A, P060A, P061A, P062A, P067A, P070A, P076A, P078A, P079A, P081A, P082A, P083A, P092A, P096A, P097A, P098A, P1030A, P103A, P104A, P106A, P109A, P110A, P114A, P117A, P124A, P1319A, P1320A, P1322A, P1325A, P1345A, P1346A, P1347A, P1348A, P1349A, P1350A, P1352A, P1365A, P1366A, P1379A, P1380A, P1381A, P1382A, P1388A, P1392A, P1393A, P1396S, P1403S, P1417A, P1418A, P1419A, P1466S, P1472S, P1483A, P1488S, P1489S, P1491S, P1493S, P1494S, P1495S, P1496S, P1500S, P1501S, P1502S, P1505S, P1507S, P1518A, P1528S, P1529S, P1530S, P1532S, P1533S, P1534S, P1535S, P1537A, P1540S, P1541S, P1542S, P1544S, P1547S, P1553S, P1554S, P1555S, P1556S, P1557S, P1559S, P1560S, P1561S, P1563S, P1566S, P1568S, P1581S, P1582S, P1584S, P1586S, P1587S, P1588S, P1590S, P1591S, P1632S, P1634S, P1638S, P1639S, P163A, P1640S, P1641S, P1642S, P1644S, P1647S, P164A, P1656S, P1657S, P1658S, P1671S, P1672S, P1675S, P1677S, P1678S, P1679S, P167A, P1680S, P1682S, P1683S, P1684S, P1686S, P1687S, P1688S, P1689S, P1692S, P1693S, P1694S, P1699S, P1701S, P1704S, P1705S, P1708S, P1710S, P1711S, P1712S, P1715S, P1716S, P1717S, P1723S, P1724S, P1725S, P1726S, P1727S, P1730S, P1735S, P1741S, P1742S, P1743S, P1745S, P1748S, P1751S, P1754S, P1755S, P1756S, P175A, P1762S, P1763S, P1765S, P1766S, P1767S, P1770A, P1772S, P1775S, P1778S, P1780S, P1787S, P1790S, P1792S, P1793S, P1794A, P1796S, P1797S, P1798S, P1799S, P1801S, P1802S, P1804S, P1805S, P1806S, P1811S, P1812S, P1813S, P1814S,

Waste generating process description for each building, including processes with U134 waste generation, if applicable and process flow diagrams. See instructions if process flow diagrams are not available.	WS3	P1815S, P1823A, P1825A, P1826A, P1829A, P1830A, P1839A, P1840A, P1841A, P1842A, P1843A, P1847S, P1849S, P1851A, P1852A, P1853A, P1854A, P1855A, P1864A, P1985S, P1987A, P1988A, P1996A, P1998A, P1999A, P2001A, P2002A, P2008A, P2010A, P2025A, P2043S, P2044S, P205A, P221A, P222A, P223A, P224A, P225A, P282A, P312A, P319A, P335A, P341A, P345A, P347A, P352A, P357A, P368A, P369A, P380A, P400A, P404A, P405A, P414A, P417A, P418A, P423A, P435S, P439A, P442A, P443A, P444A, P448A, P449A, P450A, P451A, P452A, P453A, P454A, P455A, P456A, P460A, P461A, P462A, P463A, P469A, P482A, P483A, P485A, P486A, P487A, P489A, P490A, P491A, P492A, P493A, P504A, P505A, P507A, P511A, P516A, P517A, P518A, P519A, P520A, P522A, P523A, P524A, P526A, P527A, P546A, P558A, P594A, P599A, P604A, P610A, P621A, P632A, P633A, P635A, P636A, P637A, P638A, P649A, P658A, P659A, P662A, P667A, P671S, P673A, P680A, P683S, P689A, P699A, P708A, P715A, P717A, P722A, P723S, P728A, P743A, P744A, P746A, P751A, P758A, P759S, P840A, P842A, P850A, P861A, P888A, P890A, U011A, U015A, U022A, U047A, U052A, U056A, U073A, U077A, U086A, U091A, U126A, U132A, U155A, U156A, U157A, U158A, U168A, U170A, U310A, U330S, U333A, U340A, U343S, U344S, U352S, U361S, U364S, U369S, U370S, U396S, U397S, U398S, U405S, U413S, U442A

Material inputs or other information identifying chemical content, and event or process that may have modified the chemical properties after generation. Include data for newly generated waste obtained through VE and/or radiography, information demonstrating neutralization of U134 waste and chemical composition that could affect the isotopic distribution.	WS4	C027A, C041A, C047A, C050A, C051A, C060A, C063A, C064A, C070A, C072A, C076A, C078A, C081A, C083A, C084A, C086A, C090A, C091A, C093A, C094A, C095A, C096A, C099A, C100A, C101A, C102A, C1033S, C1040S, C1041A, C1042A, C1051A, C105A, C1060S, C107A, C1081S, C1088A, C1090S, C1118S, C1124S, C1133S, C1134A, C1143S, C1144S, C1145S, C1147S, C1149S, C1150S, C1151S, C1152S, C1154S, C1156S, C115A, C1160S, C1163S, C1165S, C1169S, C1175S, C1178S, C1179S, C1188S, C1193S, C1195S, C1197S, C1199S, C119A, C1201S, C1205S, C1207S, C1212S, C1213S, C1214S, C1217S, C1218S, C1219S, C1221S, C1225S, C1230S, C1235S, C1238S, C1239S, C123A, C1242S, C1244S, C1255S, C1256S, C1260S, C1265S, C1266S, C1267S, C1269S, C1270S, C1271S, C1280A, C1309A, C1317S, C1318A, C1319S, C1320S, C1321S, C1325A, C1348S, C155A, C162A, C178A, C179A, C181A, C184A, C186A, C187A, C198A, C205A, C245A, C246A, C251A, C253A, C255A, C257A, C258A, C259A, C260A, C261A, C262A, C263A, C269A, C290A, C297A, C298A, C301A, C305A, C306A, C307A, C308A, C309A, C310A, C322A, C342A, C344A, C349A, C350A, C354A, C356A, C359A, C373A, C375A, C385A, C409A, C419A, C423A, C430A, C443A, C446A, C447A, C449A, C450A, C451A, C452A, C458A, C461A, C463A, C464A, C465A, C466A, C467A, C468A, C470A, C471A, C472A, C473A, C477A, C479A, C480A, C481A, C484A, C486A, C488A, C489A, C490A, C493A, C496A, C503A, C505A, C533A, C546S, C574S, C858S, C861A, C865A, C945A, D035A, D036A, D037A, D041A, D044A, D045A, D047A, D048A, D052A, D053A, D055A, D059A, D061A, D070A, D076A, D087S, D095A, D096A, D099S, D107A, D109A, P002A, P006A, P015A, P016A, P021A, P024A, P033A, P035A, P037A, P038A, P052A, P053A, P056A, P060A, P061A, P062A, P067A, P068A, P076A, P078A, P079A, P081A, P083A, P091A, P092A, P094A, P096A, P098A, P1030A, P106A, P108A, P109A, P1101A, P113A, P114A, P1291S, P1292S, P1293S, P1295S, P1296S, P1297S, P1299S, P1300S, P1301S, P1302S, P1303S, P1304S, P1305S, P1306S, P1307S, P1308S, P1317S, P1318S, P1321A, P1332S, P1345A, P1346A, P1347A, P1348A, P1349A, P1350A, P1352A, P1365A, P1366A, P1376S, P1377S, P1378S, P1379A, P1380A, P1381A, P1382A, P1384S, P1387S, P1388A, P1389A, P1390A, P1391A, P1392A, P1393A, P1403S, P1405A, P1417A, P1418A, P1419A, P1432S, P1461S, P1466S, P1472S, P1473A, P1474S, P1483A, P1489S, P1494S, P1496S,

Material inputs or other information identifying chemical content, and event or process that may have modified the chemical properties after generation. Include data for newly generated waste obtained through VE and/or radiography, information demonstrating neutralization of U134 waste and chemical composition that could affect the isotopic distribution.	WS4	P1501S, P1502S, P1505S, P1506S, P1507S, P1511S, P1512S, P1514S, P1515S, P151A, P1521S, P1528S, P1529S, P1530S, P1531S, P1532S, P1533S, P1534S, P1536S, P1537A, P1538S, P1542S, P1544S, P1545S, P1546S, P1547S, P1548A, P1549A, P1551S, P1553S, P1560S, P1563S, P1566S, P1569S, P1570S, P1571S, P1572S, P1573S, P1574S, P1575S, P1576S, P1577S, P1578S, P1580S, P1581S, P1582S, P1583S, P1585S, P1586S, P1587S, P1590S, P1591S, P1593S, P1594S, P1595S, P1596S, P1631S, P1634S, P163A, P1641S, P1642S, P1644S, P1647S, P1649S, P164A, P1654S, P1655S, P1657S, P1658S, P1666S, P1670S, P1673S, P1676S, P1681S, P1682S, P1688S, P1689S, P1691S, P1692S, P1693S, P1694S, P1699S, P1701S, P1704S, P1705S, P1706S, P1708S, P1709S, P1710S, P1711S, P1712S, P1714S, P1715S, P1716S, P1717S, P1719S, P1723S, P1725S, P1726S, P1727S, P1728S, P1729S, P1730S, P1731S, P1738S, P1742S, P1744S, P1746S, P1747S, P1748S, P1749S, P1751S, P1753S, P1754S, P1755S, P1756S, P1763S, P1765S, P1766S, P1767S, P1768S, P1769S, P1771S, P1775S, P1781S, P1782S, P1788S, P1793S, P1794A, P1797S, P1810S, P1823A, P1825A, P1826A, P1827A, P1828A, P1829A, P1830A, P1831S, P1832S, P1839A, P1840A, P1841A, P1842A, P1843A, P1847S, P1851A, P1852A, P1853A, P1854A, P1855A, P1864A, P1962S, P1984S, P1987A, P1988A, P1996A, P1998A, P1999A, P2001A, P2002A, P2008A, P2010A, P2025A, P2044S, P205A, P2061S, P207A, P214A, P215A, P221A, P222A, P223A, P224A, P225A, P282A, P283A, P284A, P285A, P305A, P306A, P307A, P308A, P310A, P313A, P319A, P324A, P328A, P334A, P335A, P336A, P337A, P341A, P343A, P344A, P345A, P347A, P350A, P351A, P354A, P356A, P357A, P359A, P365A, P368A, P369A, P380A, P393A, P400A, P401A, P403A, P404A, P406A, P409A, P417A, P418A, P423A, P426S, P435S, P439A, P442A, P443A, P444A, P446A, P448A, P449A, P450A, P451A, P452A, P453A, P454A, P455A, P456A, P457A, P458A, P460A, P461A, P462A, P463A, P469A, P475A, P485A, P486A, P487A, P489A, P490A, P491A, P492A, P493A, P497A, P498A, P499A, P501A, P503A, P504A, P505A, P506A, P509A, P512A, P516A, P517A, P518A, P519A, P520A, P521A, P522A, P523A, P524A, P527A, P532A, P534A, P539A, P545A, P546A, P552A, P591A, P592A, P593A, P594A, P599A, P604A, P610A, P621A, P632A, P633A, P635A, P636A, P637A, P638A, P649A, P650A, P655S, P657S, P658A, P659A, P662A, P667A,

Material inputs or other information identifying chemical content, and event or process that may have modified the chemical properties after generation. Include data for newly generated waste obtained through VE and/or radiography, information demonstrating neutralization of U134 waste and chemical composition that could affect the isotopic distribution.	WS4	P673A, P680A, P700S, P708A, P709A, P710A, P711A, P712A, P715A, P717A, P721S, P722A, P726S, P728A, P744A, P751A, P752A, P755A, P759S, P808S, P840A, P842A, P850A, P861A, P867S, P879S, P888A, P890A, P953A, U005A, U013A, U019A, U020A, U022A, U030A, U032A, U043A, U047A, U062A, U086A, U097A, U113A, U126A, U132A, U140A, U141A, U156A, U157A, U159A, U164A, U172A, U185A, U189A, U192A, U195A, U197A, U202A, U204A, U205A, U208A, U218A, U308S, U309S, U310A, U317A, U318A, U319A, U326S, U327S, U328S, U330S, U333A, U343S, U344S, U345S, U353S, U355S, U356S, U357S, U364S, U369S, U370S, U374S, U375S, U381S, U385S, U386S, U389S, U390S, U391S, U392S, U397S, U398S, U401S, U402S, U404S, U405S, U407S, U408S, U409S, U416S, U418S, U419S, U420S, U421S, U442A

Material inputs or other information identifying physical waste form, and event or process that may have modified the physical properties after generation. Include data obtained through RTR or VE of newly generated waste and physical composition that could affect the isotopic distribution.	WS5	C005A, C007A, C015A, C018A, C022A, C051A, C063A, C066A, C089A, C090A, C1015A, C1026A, C1029A, C103A, C1041A, C1045A, C104A, C1051A, C1052A, C1060S, C1065A, C1066S, C1067A, C1077A, C1081S, C1088A, C1090S, C1094S, C1118S, C1123A, C1124S, C1130A, C1131A, C1134A, C1152S, C1154S, C1208S, C120A, C1215S, C1216S, C1217S, C1218S, C1219S, C1227S, C1231S, C1235S, C1242S, C1244S, C1265S, C1266S, C1267S, C1270S, C1271S, C1276A, C1277A, C1278A, C1279A, C1280A, C1284A, C1302A, C1309A, C1317S, C1318A, C1326A, C1331S, C1334A, C1347A, C1348S, C1349A, C1356A, C1361S, C184A, C186A, C187A, C204A, C254A, C255A, C257A, C258A, C280A, C289A, C293A, C294A, C295A, C296A, C298A, C299A, C313A, C315A, C316A, C319A, C323A, C330A, C332A, C335A, C337A, C348A, C349A, C350A, C370A, C373A, C375A, C376A, C378A, C379A, C383A, C409A, C419A, C426A, C429A, C430A, C440A, C446A, C447A, C448A, C449A, C450A, C452A, C457A, C461A, C463A, C464A, C465A, C466A, C467A, C468A, C470A, C472A, C473A, C477A, C478A, C479A, C481A, C485A, C486A, C489A, C490A, C491A, C496A, C499A, C504A, C505A, C515A, C520A, C521A, C526A, C530A, C531A, C533A, C534A, C546S, C550S, C566S, C574S, C620A, C789S, C834A, C840S, C841S, C842S, C849A, C851A, C856A, C861A, C865A, C869S, D022A, D042A, D049A, D061A, D094A, D096A, D099S, D107A, D108S, D109A, P001A, P006A, P008A, P009A, P012A, P014A, P015A, P016A, P017A, P021A, P022A, P024A, P032A, P035A, P037A, P038A, P039A, P043A, P049A, P052A, P053A, P056A, P058A, P060A, P061A, P063A, P064A, P076A, P083A, P090A, P094A, P096A, P097A, P098A, P1030A, P104A, P1089A, P1101A, P1109A, P1137A, P113A, P116A, P117A, P1319A, P1321A, P1339A, P1345A, P1346A, P1347A, P1348A, P1349A, P1350A, P1351A, P1352A, P1364A, P1365A, P1366A, P1374A, P1379A, P1380A, P1381A, P1382A, P1388A, P1390A, P1391A, P1392A, P1393A, P1396S, P1403S, P1417A, P1419A, P141A, P1432S, P1466S, P1473A, P1474S, P1483A, P1488S, P1489S, P1491S, P1493S, P1495S, P1501S, P1506S, P1507S, P1521S, P1528S, P1529S, P1531S, P1532S, P1537A, P1547S, P1548A, P1549A, P154A, P1551S, P1557S, P1558S, P1559S, P1563S, P1566S, P1568S, P1578S, P1579S, P1580S, P1585S, P1586S, P1592S, P1593S, P1594S, P1595S, P1596S, P1634S, P1642S, P1644S, P1647S, P1649S, P1656S, P1657S, P1658S, P1666S, P1670S, P1673S, P1676S, P1681S,

Material inputs or other information identifying physical waste form, and event or process that may have modified the physical properties after generation. Include data obtained through RTR or VE of newly generated waste and physical composition that could affect the isotopic distribution.	WS5	P1704S, P1705S, P1709S, P1710S, P1711S, P1714S, P1715S, P1719S, P1725S, P1726S, P1727S, P1728S, P1729S, P1731S, P1747S, P1748S, P1751S, P1753S, P1755S, P1765S, P1766S, P1767S, P1769S, P1775S, P1779S, P1782S, P1787S, P1788S, P1793S, P1794A, P1796S, P1797S, P1799S, P1801S, P1812S, P1819A, P1823A, P1825A, P1826A, P1828A, P1829A, P1839A, P1840A, P1841A, P1842A, P1843A, P1847S, P1849S, P1850S, P1851A, P1852A, P1853A, P1854A, P1855A, P1864A, P1987A, P1988A, P1996A, P1998A, P1999A, P2001A, P2002A, P2007A, P2008A, P2010A, P2023A, P2025A, P2043S, P2044S, P2045S, P2049S, P2054S, P205A, P2064S, P207A, P211A, P212A, P213A, P214A, P215A, P216A, P221A, P222A, P223A, P224A, P225A, P237A, P282A, P283A, P305A, P306A, P312A, P316A, P319A, P328A, P333A, P334A, P335A, P336A, P342A, P343A, P344A, P345A, P347A, P350A, P351A, P354A, P356A, P357A, P365A, P368A, P370A, P372A, P380A, P381A, P384A, P385A, P393A, P399A, P400A, P417A, P418A, P423A, P435S, P439A, P441A, P442A, P443A, P444A, P448A, P449A, P450A, P451A, P452A, P453A, P454A, P455A, P456A, P460A, P461A, P462A, P463A, P465A, P469A, P475A, P486A, P487A, P489A, P490A, P491A, P492A, P493A, P498A, P499A, P501A, P502A, P503A, P504A, P505A, P506A, P507A, P509A, P510A, P511A, P512A, P516A, P517A, P518A, P519A, P520A, P521A, P522A, P523A, P524A, P525A, P526A, P527A, P532A, P539A, P544A, P545A, P546A, P553A, P556A, P567A, P593A, P594A, P599A, P604A, P610A, P621A, P632A, P633A, P635A, P636A, P637A, P638A, P649A, P650A, P654S, P657S, P658A, P659A, P662A, P667A, P670A, P673A, P680A, P683S, P699A, P700S, P708A, P709A, P710A, P711A, P712A, P715A, P717A, P721S, P722A, P726S, P727A, P728A, P735S, P736A, P741A, P744A, P746A, P751A, P752A, P758A, P759S, P816A, P834A, P838A, P840A, P842A, P847S, P850A, P859S, P861A, P878S, P880S, P881S, P882S, P888A, P890A, U004A, U009A, U022A, U028A, U097A, U113A, U126A, U139A, U141A, U145A, U146A, U153A, U154A, U156A, U157A, U159A, U166A, U175A, U176A, U184A, U187A, U189A, U190A, U191A, U192A, U195A, U197A, U198A, U204A, U205A, U206A, U207A, U208A, U218A, U219S, U220S, U223A, U224A, U225A, U230A, U306S, U312S, U317A, U318A, U319A, U326S, U327S, U328S, U330S, U333A, U339S, U343S, U344S, U345S, U351S, U353S, U361S, U370S, U372S, U374S, U375S, U380S, U381S, U383S, U384S, U385S, U386S, U391S, U393S,

Material inputs or other information identifying physical waste form, and event or process that may have modified the physical properties after	WS5	U397S, U401S, U402S, U404S, U408S, U416S, U418S, U419S, U420S, U421S, U422S, U435S, U442A

EPA hazardous waste constituents in the waste stream and Hazardous Waste Numbers assigned. Documentation regarding how the site has historically managed the waste, including the historical regulatory status of the waste (i.e., TRU mixed versus TRU nonmixed waste).	WS6	C021A, C048A, C060A, C064A, C070A, C076A, C078A, C079A, C081A, C083A, C084A, C091A, C093A, C094A, C095A, C096A, C099A, C101A, C102A, C1042A, C1051A, C1063S, C1065A, C1067A, C107A, C1081S, C1115A, C1134A, C1145S, C1146S, C1147S, C1149S, C1150S, C1154S, C1156S, C1160S, C1163S, C1178S, C117A, C1180S, C1188S, C1192S, C1193S, C1199S, C119A, C1201S, C1203S, C1205S, C1207S, C1214S, C1221S, C1235S, C1238S, C1239S, C123A, C1244S, C1255S, C1266S, C1267S, C1280A, C1317S, C1318A, C1319S, C1320S, C1321S, C1339S, C192A, C199A, C205A, C245A, C253A, C255A, C257A, C258A, C260A, C261A, C262A, C263A, C298A, C299A, C313A, C320A, C354A, C458A, C481A, C493A, C509A, C566S, C574S, C604A, C607A, C840S, C841S, C861A, C865A, C948S, D005A, D008A, D009A, D013A, D014A, D015A, D016A, D017A, D018A, D020A, D024A, D025A, D027A, D035A, D036A, D037A, D041A, D044A, D045A, D047A, D048A, D052A, D053A, D055A, D059A, D064A, D070A, D076A, D077A, D078A, D087S, D095A, D096A, D099S, D107A, D113S, D114A, D115S, D116A, P009A, P012A, P013A, P015A, P016A, P017A, P021A, P022A, P023A, P035A, P038A, P049A, P052A, P053A, P056A, P058A, P060A, P061A, P062A, P067A, P079A, P080A, P094A, P1030A, P1085S, P1086S, P1088S, P108A, P1101A, P1109A, P114A, P1326S, P1339A, P1346A, P1349A, P1350A, P1352A, P1374A, P1379A, P1380A, P1381A, P1382A, P1384S, P1389A, P1405A, P1407S, P1411S, P1412S, P1419A, P1466S, P1472S, P1483A, P1489S, P1494S, P1496S, P1501S, P1502S, P1507S, P151A, P1521S, P1528S, P1531S, P1532S, P1533S, P1535S, P1537A, P1540S, P1541S, P1545S, P1547S, P1548A, P1549A, P1553S, P1558S, P1570S, P1579S, P1586S, P1590S, P1593S, P1594S, P1631S, P1641S, P1644S, P1649S, P1666S, P1670S, P1673S, P1681S, P1714S, P1715S, P1723S, P1731S, P1740S, P1741S, P1742S, P1746S, P1748S, P1754S, P1755S, P1761S, P1765S, P1766S, P1768S, P1775S, P1788S, P1799S, P1810S, P1819A, P1823A, P1825A, P1826A, P1830A, P1839A, P1840A, P1841A, P1842A, P1843A, P1851A, P1852A, P1853A, P1854A, P1855A, P1987A, P1988A, P1996A, P1998A, P1999A, P2001A, P2002A, P2008A, P2010A, P2023A, P2025A, P2044S, P205A, P207A, P211A, P212A, P213A, P214A, P215A, P216A, P221A, P222A, P223A, P224A, P225A, P237A, P239A, P282A, P283A, P284A, P285A, P305A, P306A, P307A, P308A, P310A, P312A, P313A, P316A, P324A, P334A,

EPA hazardous waste constituents in the waste stream and Hazardous Waste Numbers assigned. Documentation regarding how the site has historically managed the waste, including the historical regulatory status of the waste (i.e., TRU mixed versus TRU nonmixed waste).	WS6	P335A, P336A, P337A, P351A, P356A, P357A, P365A, P368A, P380A, P393A, P400A, P417A, P418A, P435S, P439A, P442A, P443A, P444A, P448A, P449A, P450A, P451A, P452A, P453A, P454A, P455A, P456A, P460A, P461A, P462A, P486A, P487A, P489A, P490A, P491A, P492A, P503A, P505A, P506A, P509A, P512A, P517A, P519A, P520A, P527A, P532A, P539A, P592A, P593A, P594A, P599A, P604A, P610A, P632A, P633A, P635A, P636A, P637A, P638A, P649A, P650A, P658A, P659A, P662A, P667A, P673A, P680A, P708A, P709A, P710A, P711A, P715A, P717A, P728A, P729A, P733S, P743A, P744A, P751A, P838A, P840A, P842A, P850A, P859S, P861A, P890A, U005A, U011A, U015A, U020A, U022A, U030A, U046A, U059A, U060A, U062A, U082A, U085A, U086A, U087A, U088A, U089A, U090A, U097A, U102A, U103A, U113A, U142A, U184A, U185A, U190A, U192A, U199A, U205A, U206A, U208A, U218A, U236S, U308S, U309S, U320S, U330S, U333A, U343S, U344S, U355S, U356S, U357S, U374S, U375S, U385S, U386S, U389S, U390S, U391S, U398S, U402S, U407S, U408S, U409S

Specification of the isotopic ratios for the 10 WIPP-tracked radionuclides (241Am, 238PU, 239 Pu, 240 PU, 242Pu, 233U, 234U, 238 U, 90 Sr, and 137Cs) and the radionuclides comprising 95% of the hazard.	WS7	C002A, C072A, C1029A, C1041A, C1056S, C1065A, C1066S, C1067A, C1068S, C1081S, C1087S, C1090S, C1091S, C1094S, C1095S, C1133S, C1140S, C1142S, C1143S, C1144S, C1151S, C1152S, C1157S, C1161S, C1168S, C1169S, C1182S, C1188S, C1195S, C1196S, C1198S, C1200S, C1202S, C1211S, C1215S, C1216S, C1217S, C1218S, C1224S, C1225S, C1226S, C1227S, C1231S, C1232S, C1235S, C1243S, C1251S, C1258S, C1266S, C1280A, C1281A, C1309A, C130A, C134A, C137A, C174A, C180A, C184A, C210A, C221A, C255A, C256A, C281A, C285A, C291A, C338A, C348A, C351A, C354A, C358A, C368A, C370A, C371A, C373A, C378A, C379A, C380A, C381A, C383A, C384A, C385A, C387A, C388A, C389A, C390A, C391A, C393A, C394A, C396A, C400A, C401A, C402A, C404A, C405A, C406A, C408A, C409A, C410A, C412A, C413A, C414A, C416A, C417A, C418A, C419A, C420A, C421A, C422A, C423A, C425A, C426A, C427A, C428A, C429A, C430A, C431A, C432A, C433A, C434A, C435A, C436A, C437A, C438A, C439A, C440A, C441A, C442A, C445A, C446A, C447A, C448A, C449A, C450A, C452A, C453A, C464A, C465A, C466A, C467A, C468A, C469A, C470A, C471A, C472A, C477A, C479A, C485A, C488A, C489A, C490A, C491A, C494A, C505A, C506A, C508A, C517A, C523A, C551A, C552S, C566S, C603A, C604A, C840S, C841S, C865A, D022A, D051A, D099S, D101S, D107A, P016A, P024A, P035A, P038A, P053A, P056A, P061A, P062A, P067A, P076A, P078A, P079A, P081A, P083A, P090A, P092A, P094A, P098A, P1030A, P104A, P1109A, P113A, P115A, P117A, P1339A, P1346A, P1347A, P1349A, P1350A, P1351A, P1374A, P1379A, P1380A, P1381A, P1382A, P1387S, P1389A, P1390A, P1391A, P1392A, P1393A, P1403S, P1405A, P1466S, P1472S, P1483A, P1489S, P1491S, P1500S, P1506S, P1507S, P1521S, P1524S, P1529S, P1530S, P1532S, P1533S, P1534S, P1535S, P1536S, P1537A, P1540S, P1541S, P1542S, P1544S, P1547S, P1553S, P1555S, P1556S, P1557S, P155A, P1561S, P1563S, P1565S, P1566S, P1569S, P156A, P1572S, P1573S, P1574S, P1575S, P1576S, P1577S, P1579S, P1584S, P1585S, P1586S, P1589S, P1590S, P1591S, P1593S, P1594S, P1596S, P1634S, P163A, P1644S, P1647S, P1649S, P164A, P1657S, P1658S, P1666S, P1670S, P1673S, P1691S, P1705S, P1706S, P1708S, P1709S, P1711S, P1715S, P1716S, P1717S, P1719S, P1723S, P1728S, P1729S, P1730S, P1731S, P1735S, P1738S, P1741S, P1744S, P1746S, P1748S, P1753S, P1756S, P1758S, P1761S,

Specification of the isotopic ratios for the 10 WIPP-tracked radionuclides (241Am, 238PU, 239 Pu, 240 PU, 242Pu, 233U, 234U, 238 U, 90 Sr, and 137Cs) and the radionuclides comprising 95% of the hazard.	WS7	P1769S, P1771S, P1772S, P1778S, P1780S, P1788S, P1790S, P1792S, P1793S, P1795S, P1796S, P1804S, P1805S, P1806S, P1810S, P1819A, P1823A, P1825A, P1826A, P1839A, P1840A, P1841A, P1842A, P1843A, P1847S, P1851A, P1852A, P1853A, P1854A, P1855A, P1864A, P189A, P190A, P194A, P195A, P1987A, P1988A, P198A, P1996A, P1998A, P1999A, P2001A, P2002A, P2008A, P2010A, P2023A, P2025A, P221A, P222A, P223A, P224A, P227A, P230A, P231A, P232A, P233A, P234A, P235A, P236A, P240A, P282A, P283A, P294A, P295A, P305A, P306A, P307A, P312A, P319A, P322A, P348A, P349A, P353A, P354A, P355A, P357A, P368A, P380A, P381A, P385A, P398A, P400A, P417A, P418A, P423A, P435S, P439A, P442A, P443A, P448A, P449A, P452A, P453A, P454A, P455A, P456A, P460A, P461A, P462A, P463A, P467A, P469A, P472A, P482A, P486A, P487A, P489A, P490A, P491A, P492A, P493A, P499A, P501A, P502A, P503A, P504A, P505A, P506A, P507A, P509A, P510A, P511A, P512A, P513A, P514A, P517A, P518A, P519A, P520A, P521A, P522A, P523A, P524A, P525A, P526A, P527A, P532A, P539A, P540A, P543A, P544A, P545A, P546A, P547A, P548A, P549A, P550A, P551A, P553A, P554A, P555A, P558A, P593A, P594A, P604A, P610A, P611A, P621A, P622A, P632A, P633A, P635A, P636A, P637A, P638A, P649A, P650A, P658A, P659A, P662A, P673A, P680A, P699A, P703A, P708A, P709A, P710A, P711A, P712A, P715A, P719S, P721S, P728A, P743A, P744A, P745A, P751A, P759S, P834A, P838A, P840A, P842A, P850A, P861A, P888A, P890A, P953A, U022A, U047A, U073A, U126A, U137A, U139A, U141A, U142A, U147A, U153A, U154A, U155A, U156A, U157A, U158A, U159A, U160A, U161A, U162A, U166A, U168A, U169A, U170A, U172A, U173A, U184A, U185A, U187A, U189A, U190A, U192A, U195A, U198A, U199A, U202A, U203A, U205A, U208A, U220S, U235S, U237S, U306S, U310A, U311S, U320S, U330S, U331S, U333A, U336S, U337A, U338S, U339S, U342S, U343S, U344S, U345S, U347S, U351S, U352S, U361S, U370S, U372S, U381S, U383S, U385S, U386S, U388S, U389S, U391S, U396S, U397S, U398S, U400S, U405S, U406S, U412S, U414S, U415S, U416S, U418S, U419S, U420S, U421S, U440A, U442A, U444S

AK Information	AK#<1>	Source Document Reference Number
Generator site TRU waste stream (WS) - specific information		
Documentation identifying the presence of prohibited items listed in Section C-1c of the WIPP-WAP.	WS8	C1029A, C1051A, C1052A, C1070A, C1131A, C1156S, C1276A, C1277A, C1280A, C1281A, C1299S, C1309A, C1310A, C1313A, C1317S, C1318A, C1320S, C1321S, C1331S, C1347A, C1348S, C1349A, C198A, C199A, C214A, C321A, C376A, C392A, C415A, C416A, C466A, C470A, C473A, C511A, C516A, C530A, C531A, C532A, C568S, C574S, C613S, C614S, C615S, C616S, C842S, C861A, D035A, D070A, D087S, D096A, D109A, P001A, P012A, P013A, P014A, P015A, P016A, P017A, P021A, P022A, P024A, P053A, P063A, P1030A, P1101A, P1319A, P1325A, P1351A, P1364A, P1365A, P1366A, P1379A, P1380A, P1381A, P1388A, P1389A, P1403S, P1405A, P1419A, P1466S, P1483A, P1823A, P1825A, P1826A, P1828A, P1829A, P1830A, P1839A, P1840A, P1841A, P1842A, P1843A, P1851A, P1852A, P1853A, P1854A, P1855A, P1987A, P1988A, P1996A, P1998A, P1999A, P2001A, P2002A, P2008A, P2010A, P2025A, P2045S, P2049S, P2050S, P2054S, P215A, P221A, P222A, P223A, P224A, P225A, P237A, P319A, P356A, P357A, P358A, P368A, P370A, P372A, P385A, P399A, P400A, P405A, P412A, P417A, P418A, P439A, P442A, P443A, P461A, P462A, P465A, P486A, P487A, P492A, P525A, P604A, P610A, P632A, P633A, P635A, P636A, P637A, P638A, P649A, P650A, P658A, P659A, P662A, P667A, P673A, P680A, P708A, P709A, P710A, P711A, P712A, P715A, P727A, P728A, P733S, P741A, P744A, P751A, P840A, P842A, P858A, P859S, P861A, P888A, P890A, U113A, U126A, U215A, U223A, U224A, U225A, U236S, U320S, U321A, U330S, U333A, U392S, U435S, U442A

<1> The AK#'s are to be used in the Acceptable Knowledge Source Document Summary to aid in the identification of program and waste stream-specific elements within a given document.

All required AK information has been compiled and tracking numbers assigned.

AK Expert: Randall C. Morris — Print/Sign — Date: 09/11/14 — Date

Site Project Manager: Steve Coyne — Print/Sign — Date: 9/11/14

Waste Stream

Name:	RPT-TRUW-83, ACCEPTABLE KNOWLEDGE SUMMARY FOR SUPERCOMPACTED DEBRIS WASTE	
Number:	BN510.3	

The mixed waste identified on manifest number _____ and bearing the EPA hazardous waste numbers D004 through D011, D022, D027, D028, D029, D030, D032, D034, D037, D043, F001, F002, F004, F005, F006, F007 and F009 are designated as transuranic (TRU) mixed waste and have been exempted from the land disposal prohibitions of 40 CFR 268 by the Land Withdrawal Act Amendments (Public Law 104-201). This amendment exempts WIPP waste from treatment standards promulgated pursuant to section 3004(m) of the Solid Waste Disposal Act [42 U.S. C. 6924(m)] and are not subjected to the Land Disposal Prohibitions in section 3004(d), (e), (f), and (g) of the Solid Waste Disposal Act.

Hazardous waste number(s)[3]	Land Disposal Prohibition effective date[4]
D004	May 26, 2000
D005	May 26, 2000
D006	May 26, 2000
D007	May 26, 2000
D008	May 26, 2000
D009	May 26, 2000
D010	May 26, 2000
D011	May 26, 2000
D022	September 19, 1996
D027	September 19, 1996
D028	September 19, 1996
D029	September 19, 1996
D030	September 19, 1996
D032	September 19, 1996
D033	September 19, 1996
D034	September 19, 1996
D037	September 19, 1996

D043	September 19, 1996
F001	November 8, 1986
F002	November 8, 1996
F004	November 8, 1996
F005	November 8, 1996
F006	July 8, 1989
F007	July 8, 1989
F009	July 8, 1989

AMWTP Advanced Mixed Waste Treatment Project	Waste Stream Profile Form HWN Assignment Worksheet	Form-1187 Rev. 4 Effective: 08/14/13 Page 1 of 1

Implementing Document: MP-TRUW-8.13

WSPF Number: BN510.3

AK Summary Report/Rev. Number: RPT-TRUW-83 Rev.8

HWN	(1) AK ASSIGNED	(2) VE OR RTR TESTING	(3) WSPF	(4) PERMITTED
F001	✔		✔	✔
F002	✔		✔	✔
F003				✔
F004	✔		✔	✔
F005	✔		✔	✔
F006	✔		✔	✔
F007	✔		✔	✔
F009	✔		✔	✔
D004	✔		✔	✔
D005	✔		✔	✔
D006	✔		✔	✔
D007	✔		✔	✔
D008	✔		✔	✔
D009	✔		✔	✔
D010	✔		✔	✔
D011	✔		✔	✔
D022	✔		✔	✔
D027	✔		✔	✔
D028	✔		✔	✔
D029	✔		✔	✔
D030	✔		✔	✔
D032	✔		✔	✔
D033	✔		✔	✔
D034	✔		✔	✔
D037	✔		✔	✔
D043	✔		✔	✔

Carlson, Clydene

From: Blattner, Delisa
Sent: Wednesday, October 23, 2013 8:06 AM
To: Site Documents - DOE
Cc: Records Management-Document Control; 'marcus.pinzel@wipp.ws'; Schweinsberg, Eric; Roberts, Benjamine B; Wells, Jerry L; Jenkins, Talley W Jr; Byram, George; Tedford, Gina; Document Services
Subject: For Approval RPT-TRUW-83 Rev 7B
Attachments: BN510 3 Waste Stream Profile.pdf; DCR-12760 casefile.pdf; RPT-TRUW-83_R7B_with attachments.pdf; RPT-TRUW-83_R7B-redline.pdf

AMWTP has revised the subject document (RPT-TRUW-83) and a draft new WSPF BN-510.3 for the Super-Compacted Debris. Having received DOE-ID's concurrence we are now seeking CBFO review and approval. This new Waste Stream Profile Form (WSPF) is accompanied with the Characterization Information Summary (CIS) and Acceptable Knowledge Summary (AKS). This will be a new profile for the BN-510 waste stream, as we are adding the Subsurface Disposal Area (SDA) waste as feedstock to the Treatment Facility (TF). Please review and provide your review and concurrence.

Attached is DCR-12760 and the updated documents.

Should you have any questions regarding this action, please feel free to contact me.

Thank you,
Delisa Blattner
Document Services
(208)-557-6480

AMWTP
Advanced Mixed Waste Treatment Project

AMWTP SURVEILLANCE REPORT

Surveillance No.: 64529

Title: TRU Programs 1st Quarter Level 1 Data Generation and Validation- VEB Batch Review

Originator: Morse, Angela	**Assigned Actionee:** Robison, Camille
Date Opened: 03/11/14	**Date Due:** 03/28/14
Risk Level: Low	**Responsible Manager:** George Byram
Functional Area: TRU Programs	**Surveilled Organization:** Waste Programs

Surveillance Area: TRU Programs Data Generation and Validation

Scope of Surveillance:

Review a randomly selected AMWTP TRU Program visual examination batch (VEB) data report that has been processed through the SPM level of validation. Evaluate data generation and Level 1 validation process compliance with implementing procedures.

Scheduled By: Angela Morse	**Scheduled Date:** 03/11/14
Rescheduled By:	**Rescheduled Date:**

SURVEILLANCE PLAN

Surveillance Method: Record(s)/Document(s) Review

Source/Requirements Documents:

MP-TRUW-8.8, Level 1 Data Validation Rev. 35

Surveillance Plan:

Review batch data report VEB14-00065 in accordance with MP-TRUW-8.8, Level I Validation. See surveillance checklist for specific criteria examined during course of surveillance.

SURVEILLANCE RESULTS

Surveillance Summary:

Batch VEB14-00065 was selected for Level I Validation review. Each container in the BDR was reviewed per MP-TRUW-8.8 (see surveillance checklist for specific criteria reviewed). This surveillance determined that the Level I Validaion was performed satisfactorily.

CAQ(s) Identified?: No	**CAR or NCR No.** N/A

Conditions Adverse to Quality:

No conditions adverse to quality were observed.

Strengths:

Level I Validation was performed in accordance with the procedure.

Observations/Recommendations:

No observations or recommendations.

Effectiveness Evaluation:

MP-TRUW-8.8, Level I Data Validation, is clear and concise in the requirements an Independent Technical Reviewer is expected/required to adhere to when performing Level I Validation duties. ITRs are following the procedure as written, which ensures that any validation performed is done correctly and all pertinent information is recorded and reported. The procedure is implemented effectively as is evident by no observed conditions adverse to quality and no previously reported issues for the VE process.

Performed By: Camille Robison	**Performed Date:** 03/13/14
Additional Action Complete By:	**Additional Action Complete Date:**

AMWTP
Advanced Mixed Waste Treatment Project

AMWTP SURVEILLANCE REPORT

Surveillance No.: 84629

QA MANAGER SURVEILLANCE REVIEW

1. Are all Conditions Adverse to Quality properly identified?	NA
2. Are all Conditions Adverse to Quality reported on a CAR or NCR?	NA
3. Are follow up actions identified for any Recommendations?	NA

QA Manager Review Comments:

QA 2014 1st Quarter Level 1 data generation and validation surveillance concludes with no findings of conditions adverse to quality. There were no conditions adverse to quality of observations identified as a result of this surveillance.
The randomly selected VEB Batch Data Report demonstrated satisfactory achievement of the QAOs and DQOs required from the TRU Programs QAPjP for characterization using visual examination methods.

Additional Action Required By:	**Additional Action Required Date:**
QA Manager Review/Closed By: Angela Morse	**QA Manager Review/Closed Date:** 03/17/14
QA Manager Cancelled By:	**QA Manager Cancelled Date:**

DIVIDER

PAGE

AMWTP
Advanced Mixed Waste Treatment Project

AMWTP SURVEILLANCE REPORT

INFORMATION ONLY

Surveillance No.: 87996

Title: 2nd Quarter 2014, Level I TRU Programs Data Generation and Validation - VEB

Originator: Sharp, Michelle	**Assigned Actionee:** Garcia, Earl
Date Opened: 08/14/14	**Date Due:** 09/05/14
Risk Level: Low	**Responsible Manager:** George Byram
Functional Area: TRU Waste Certification	**Surveilled Organization:** Waste Programs

Surveillance Area: TRU Programs Data Generation and Validation

Scope of Surveillance:

Perform a quarterly review of a randomly selected Visual Examination Boxline (VEB) batch data report processed through the Site Project Manager (SPM) level to evaluate and ensure that the requirements of MP-TRUW-8.8, Revision 38, *Level I Data Validation*,are being satisfied.

Scheduled By: Earl Garcia	**Scheduled Date:** 08/22/14
Rescheduled By:	**Rescheduled Date:**

SURVEILLANCE PLAN

Surveillance Method: Record(s)/Document(s) Review

Source/Requirements Documents:

MP-TRUW-8.8, Revision 38, *Level I Data Validation*

Surveillance Plan:

Evaluate a randomly selected VEB batch data report to verify the Level I validation process per MP-TRUW-8.8, Rev. 38 is meeting the specified requirements.

SURVEILLANCE RESULTS

Surveillance Summary:

Batch data report VEB14-00168 was randomly selected for Level I Data Validation review to complete this surveillance. The data for each container were reviewed to verify that the requirements in MP-TRUW-8.8, Revision 38 were being satisfied. The accompanying surveillance checklist defines the specific criteria examined for this surveillance. Based on these criteria the all requirements are being performed in accordance with the aforementioned procedure.

CAQ(s) Identified?: No	**CAR or NCR No.** N/A

Conditions Adverse to Quality:

No conditions adverse to quality were discovered

Strengths:

Level I data validation is being completed in a compliant manner.

Observations/Recommendations:

None

Effectiveness Evaluation:

After review, it is apparent that the Level I validation is an effective process and the procedure offers a concise, step by step process, that ensures compliance. Based on this evaluation, it is apparent that the personnel conducting the validation are experienced and well trained, and the results of this sureveillance support that determination.

Performed By: Earl Garcia	**Performed Date:** 08/22/14
Additional Action Complete By:	**Additional Action Complete Date:**

AMWTP
Advanced Mixed Waste Treatment Project

AMWTP SURVEILLANCE REPORT

Surveillance No.: 87995

QA MANAGER SURVEILLANCE REVIEW

1. Are all Conditions Adverse to Quality properly identified?	NA
2. Are all Conditions Adverse to Quality reported on a CAR or NCR?	NA
3. Are follow up actions identified for any Recommendations?	NA

QA Manager Review Comments:

The 2014 2nd Quarter Level 1 data generation and validation surveillance concludes with no findings of conditions adverse to quality or observations. The randomly selected VEB Batch Data Report demonstrated satisfactory achievement of the QAOs and DQOs required from the TRU Programs QAPjP for characterization using visual examination methods.

The 2014 2nd Quarter surveillance was completed in the third quarter of 2014 due to oversight of scheduling surveillance. CAR 88000 was initiated as a result of this issue and corrective actions are complete with closure of this surveillance report. All corrective actions will be documented in CAR 88000 and processed for verification/closure.

Additional Action Required By:	**Additional Action Required Date:**
QA Manager Review/Closed By: Angela Morse	**QA Manager Review/Closed Date:** 09/02/14
QA Manager Cancelled By:	**QA Manager Cancelled Date:**

AMWTP
Advanced Mixed Waste Treatment Project

NONCONFORMANCE REPORT

NCR No.: 74039

PARENT:

Title: Incomplete Visual Examination

Category: WIPP Data	**Affected Item Type:** Container ID
Affected Item: 10466946	
Originator: Skaar, Wesley	**Date Opened:** 12/07/12
Source Type: As Found Condition	**ORPS Reportable:**
Source Type Doc. No.	
ORPS No.:	**ORPS Category:**
Finding #:	
Requirement Violated: FOI-17 Step 4.8.1, 4.8.1.1, and section 4.5; MP-TRUW-8.9, step 3.1.7 Note1; MP-TRUW-8.2, Sec. C1-4	
Shipment No. N/A	**Payload No.** N/A
Equipment ID: VE BiD RPCK	**PO Number:**
Batch No. VEB12-00	
Container ID: 10466946	
Tag Applied:	**No. of Tags:**

Description of Condition:

During boxline operations container 10466946 was generated. The container fell of the conveyor in system 390. An entry was made to upright the contianer and during the entry waste was removed and placed into container 10466934. The Visual examination record for 10466946 was not updated for the removal of the waste.

QA Update: Container 10466934 has been removed from the Container ID field as there is not a compliance issue with this container. This NCR is to resolve the issue associated with the visual examination record for 10466946 which was not updated for removal of the waste. A. Morse 12-11-12

Manager Review By: Wesley Skaar	**Manager Review Date:** 12/07/12
QA Closed-Cancelled By:	**QA Closed-Cancelled Date:**

Note: QA Closed-Cancelled Signature is based on concurrence between Responsible Manager and Quality Assurance

Is Valid: Yes	**WIPP Submittal Req'd?**
Stop Work Order: No	**Is CAR Req'd?** No
HSS-OE Applicable: Yes	**NTS Report Number:**
HSS-OE Reportable: No	**NTS Report Date:**

HSS-OE Regulations

10 CFR 820: No	**10 CFR 830 Subpart A:** Yes
10 CFR 830 Subpart B: No	**10 CFR 835 Rad Protection:** No
10 CFR 851Safety/Health: No	**Quality (Type Material):** WIPP VE Technique (Box)
	Responsible Department: Waste Programs
	Functional Area: TRU Programs
	Disposition Due Date: 01/06/13
QA Mgr Rev Sign By:	**QA Mgr Rev Sign Date:**

AMWTP
Advanced Mixed Waste Treatment Project

NONCONFORMANCE REPORT

NCR No.: 74039

PARENT:

	Date Due:
Disposition:	**Responsible Manager:** Peterman, Susan
	Assigned Actionee: Schweinsberg, Eric
Conditional Use:	**Conditional Use Expiration Date:**
USQ Screen Req'd?	**USQ Screen No.:**
Root Cause Analysis:	
Level A Cause Code:	**Contributing Cause Level A:**
Level B Cause Code:	**Contributing Cause Level B:**
Level C Cause Code:	**Contributing Cause Level C:**
Disposition Description:	
Mgr Disp App By:	**Mgr Disp App Date:**
QA Add'l Disp. Req'd By:	**QA Add'l Disp. Req'd Date:**
Mgr Add'l. Disp App By:	**Mgr Add'l. Disp App Date:**
QA Mgr Rev Disp Sign By:	**QA Mgr Rev Disp Sign Date:**
CAP Complete Comments:	
Action Complete By:	**Action Complete Date:**
QA Add'l Action Req'd By:	**QA Add'l Action Req'd Date:**
Add'l Action Complete By:	**Add'l Action Complete Date:**
QA Verification Complete By:	**QA Verification Comp Date:**

From:	Byram, George
To:	"wipp.notify@wipp.ws"
Cc:	Peterman, Susan M.; Schweinsberg, Eric; "Skaar, Wes"; Morse, Angie ; Fesmire Courtland; LaBruyere, Gary A.; Walker, L J; Grise, Ron; Preston, Dave
Subject:	[NCR] 74039
Date:	Monday, December 17, 2012 12:53:07 PM
Attachments:	NCR 74039.pdf

Attached is NCR 74039 for CBFO notification in accordance with the WIPP Hazardous Waste Permit. Please contact me if you have any questions.

George Byram
TRU Programs
Idaho Treatment Group
208-557-6319
208-521-3390

DIVIDER PAGE

AMWTP
Advanced Mixed Waste Treatment Project

NONCONFORMANCE REPORT

NCR No.: 74582

PARENT:

Title: Data not reported properly.

Category: WIPP Data	**Affected Item Type:** Container ID
Affected Item: 10202073	
Originator: Ryman, Lyle	**Date Opened:** 12/18/12
Source Type: As Found Condition	**ORPS Reportable:**
Source Type Doc. No.	
ORPS No.:	**ORPS Category:**
Finding #:	
Requirement Violated: MP-TRUW-8.9, step 3.1.4: Complete the data review and ensure that the BDR is complete, that data is reportec	
Shipment No. N/A	**Payload No.** N/A
Equipment ID: Z-213-101	**PO Number:**
Batch No. RTR12-00153	
Container ID: 10202073	
Tag Applied:	**No. of Tags:**

Description of Condition:

Results of the project level data validation performed by the SPM determined the data associated with BDR RTR12-00153 was not acceptable for signature release. The SPM noticed the closure date was missing from the Analysis Report for container 10202073 but failed to initiate an NCR in accordance with MP-TRUW-8.9, which states in part "Complete the data review and ensure that the BDR is complete, that data is reported properly, and that proper procedures were followed."
Note: SDCR 2740 has been initiated to revise the analysis report.

Manager Review By: Angela Morse	**Manager Review Date:** 01/02/13
QA Closed-Cancelled By:	**QA Closed-Cancelled Date:**

Note: QA Closed-Cancelled Signature is based on concurrence between Responsible Manager and Quality Assurance

Is Valid: Yes	**WIPP Submittal Req'd?** Yes
Stop Work Order: No	**Is CAR Req'd?** No
HSS-OE Applicable: Yes	**NTS Report Number:**
HSS-OE Reportable: No	**NTS Report Date:**

HSS-OE Regulations

10 CFR 820: No	**10 CFR 830 Subpart A:** Yes
10 CFR 830 Subpart B: No	**10 CFR 835 Rad Protection:** No
10 CFR 851Safety/Health: No	**Quality (Type Material):** WIPP Batch-RTR
	Responsible Department: Waste Programs
	Functional Area: TRU Programs
	Disposition Due Date: 01/23/13
QA Mgr Rev Sign By: Lyle Ryman	**QA Mgr Rev Sign Date:** 01/02/13
	Date Due: 02/28/23

AMWTP
Advanced Mixed Waste Treatment Project

NONCONFORMANCE REPORT

NCR No.: 74582

PARENT:

Disposition: Rework	**Responsible Manager:** Peterman, Susan
	Assigned Actionee:
Conditional Use: No	**Conditional Use Expiration Date:**
USQ Screen Req'd? NO	**USQ Screen No.:**
Root Cause Analysis: No	
Level A Cause Code: A1 - Design/Engineering Problem	**Contributing Cause Level A:**
Level B Cause Code: B5 - Operability of Design/Environment LTA	**Contributing Cause Level B:**
Level C Cause Code: C02 - Physical Environment LTA	**Contributing Cause Level C:**

Disposition Description:

For closure of this NCR the following actions will be required.
1. Demote RTR12-00153 to ITR for rework to resolve the missing closure date associated with this NCR,
2. Generate an SDCR to correct the closure date for container 10202073,
3. Following patch of SDCR, verify closure date is populating in RTR12-00153. GTB 1/7/13

Mgr Disp App By: George Byram	**Mgr Disp App Date:** 01/07/13
QA Add'l Disp. Req'd By: Lyle Ryman	**QA Add'l Disp. Req'd Date:** 01/08/13
Mgr Add'l. Disp App By:	**Mgr Add'l. Disp App Date:**
QA Mgr Rev Disp Sign By:	**QA Mgr Rev Disp Sign Date:**

CAP Complete Comments:

Action Complete By:	**Action Complete Date:**
QA Add'l Action Req'd By:	**QA Add'l Action Req'd Date:**
Add'l Action Complete By:	**Add'l Action Complete Date:**
QA Verification Complete By:	**QA Verification Comp Date:**

Byram, George

From: Byram, George
Sent: Thursday, January 03, 2013 6:32 PM
To: 'wipp.notify@wipp.ws'
Cc: Peterman, Susan M.; Schweinsberg, Eric; 'Skaar, Wes'; Morse, Angie ; Fesmire Courtland; LaBruyere, Gary A.; Burnside, Kenny
Subject: [NCR] 74582
Attachments: NCR 74582.pdf

Attached is NCR 73825 for CBFO notification in accordance with the WIPP Hazardous Waste Permit. Please contact me if you have any questions.

George Byram
TRU Programs
AMWTP Idaho Operations
2008-557-6319
208-521-3390

You are using the Production Database Server

Return to Main Page

This Tailgate has been APPROVED and NO CHANGES may be made to it other than selecting attendees.

Details | Attachments | Class Attendees | Presenters/Dates

Tailgate Number: TGTRU0000104

Tailgate Type: TRU Programs

Approval Manager: STERRL

Approval Date: 3/25/2014 12:00:00 AM

Date of the Tailgate: 3/25/2014

Tailgate Status: Open — If you close the Tailgate you cannot make changes.

Title of the Tailgate: NCR Reportability - CAR 80832

Purpose of the Tailgate: Advise SPMs of Corrective Actions on CAR 80832

Audience of the Tailgate: SPMs currently working in SPO Validation.

Objective of the Tailgate: SPMDs will have an understanding of what occured with CAR 80832, and will know the expectations of the Site Project Office (SPO) regarding reporting NCRs to WIPP, and how it is documented.

Content of the Tailgate: MS Word file dilineating the Corrective Actions.

Justification or deviation from guidelines: N/A

Update Tailgate

SPM Briefing – NCR Report ability

History: CAR 80832 Failure to notify WIPP of NCR within required periodicity.

MP-TRUW-8.2 requires reporting NCRs (Nonconformance to DQOs). The requirement specifically states - for any non-administrative nonconformance related to applicable requirements specified in this QAPjP, which are first identified at the SPM signature release level (i.e., a failure to meet a DQO), AMWTP will submit to CBFO a written notification within seven calendar days of identification and submit an NCR within thirty (30) calendar days of identification of the incident. AMWTP reported three NCRs between October 2012 - September 2013 that did not meet the periodicity requirement of seven days. The NCRs are attached as supporting documentation, as follows:

NCR	Open Date	Transmittal Date
74039	12/7/12	12/17/12
74582	12/18/12	1/3/13
75766	2/13/13	2/21/13

The SPM conducted an Extent of Condition of any other NCRs that may not have been reported, or not reported in a timely manner. The evaluations conducted for the past six months revealed that no other NCRs missed the WAP criteria of seven working days, nor were any additional NCRs not reported as required.

The current process of evaluating NCRs for WIPP report ability was conducted; these actions are currently being taken:

- An SPMD conducts an evaluation of Type 1 NCRs two times/week, on Monday and Thursday. There was a period of time where the SPMD transferred most of their time to AK (~ one year); during this time the evaluations were sporadic.
- These query/evaluations are documented and put on Enterprise (Ent/TRU Programs/CBFO NCR Queries.
- When the SPMD is gone (on PL), the evaluation duty is done by the TRU Program Manager or Alternate SPM.

Further Investigation:
Three NCRs were described in this CAR (as not being reported to WIPP in a timely manner). Upon further review of the three NCRs, two of them did *not* need to be reported, the third one should have been reported, albeit to follow the letter of the law. When we found the one initial issue with NCR 75766 as being reported late, we conducted a search of the previous 11 months and found the other two NCRs that were reported to WIPP past the seven day notification limit. The CAR was written to determine the extent of condition and necessary corrective actions.

Corrective Actions:

1) Conduct a Tailgate Briefing with specified SPMs on what constitutes necessary reporting of NCRs to WIPP in a timely manner. Included in the briefing will be:

a) Section 3-7 of MP-TRUW-8.2 (Nonconformance's): *Management at all levels will foster a "no-fault" attitude to encourage the identification of nonconforming items and processes. Nonconformance's may be detected and identified by anyone performing WIPP-WAP activities.*

The SPM oversees the NCR process and is responsible for identifying and tracking all nonconformance's and reports this information to CBFO. The SPM is also responsible for notifying project personnel of the nonconformance and verifying completion of the corrective action for nonconformances.

Nonconformance to DQOs

For any non-administrative nonconformance related to applicable requirements specified in this QAPjP, which are first identified at the SPM signature release level (i.e., a failure to meet a DQO), AMWTP will submit to CBFO a written notification within seven calendar days of identification and submit an NCR within thirty (30) calendar days of identification of the incident. The AMWTP will issue an NCR and implement corrective actions, which will be resolved prior to shipment.

b) The process of identifying WIPP reportable NCRs and putting them on Enterprise:

- *The SPM (typically Nancy, Eric, Geo or Wes) that reports the NCR to WIPP ensures it is than logged out on Enterprise. [Enterprise/TRU/CBFO Reported NCRs & CARs]*

c) The process of evaluated NCRs (that are not WIPP reportable) being located on Enterprise:

- *When we evaluate an NCR to not be WIPP reportable (when we have been asked by QA or someone questions if an NCR is reportable) we write a response as to why the NCR is not WIPP reportable, and document the response. These also are located on [Ent/TRU/CBFO Reported NCRs] with a specific folder for NCRs not reportable. The evaluation is typically done by the SPM (Eric) and confirmed by discussions with two other SPMs, aka sanity check.*

d) The process of how Type I NCRs with Data Quality Objectives (DQOs) are identified and reviewed by the RTR SME:

- *During the validation process, if there is a instance of not meeting a Data Quality Objective or Quality Assurance Objective, the SME will write a Type I NCR, e.g. Operator 2 disagrees with Operator 1 on liquid amount → SME reviews and makes determination; e.g. ITR fails to write NCR on impenetrable and promotes BDR*

to SPM, a Type I NCR will be written → and reported to WIPP. Note: Anytime we find an issue and have to write an NCR at SPM it is reported to WIPP (typically).

e) The process of monthly evaluations of the Type I NCRs conducted by the SPM:

- *On a monthly basis the SPM (Eric) reviews all the queries that have been done (by Nancy, Geo or Wes) and a 2nd verification check to ensure we're following the process.*

You are using the Production Database Server

Return to Main Page

This Tailgate has been APPROVED and NO CHANGES may be made to it other than selecting attendees.

Details | Attachments | Class Attendees | Presenters/Dates

Scan Employees to Record Attendance

Employee ID	Last Name	First Name	Attend Date	Status Description	Edit	Delete	Training History
000067808	BYRAM	GEORGE	3/25/2014	COMPLETE	Edit	Delete	View
000085557	FETZER	PAMELA	3/25/2014	COMPLETE	Edit	Delete	View
000102910	KIRK	NANCY	3/25/2014	COMPLETE	Edit	Delete	View
000101278	MARQUARDT	DAVID	3/25/2014	COMPLETE	Edit	Delete	View
000103628	ROJAS	CESAR	3/25/2014	COMPLETE	Edit	Delete	View
000086737	**SCHWEINSBERG**	**ERIC**	**3/25/2014**	**COMPLETE**	**Edit**	**Delete**	**View**
000103164	SKAAR	WESLEY	3/25/2014	COMPLETE	Edit	Delete	View
000077582	STYHL	NICHOLAS	3/25/2014	COMPLETE	Edit	Delete	View
000035927	TEDFORD	GINA	3/25/2014	COMPLETE	Edit	Delete	View
000078972	WALKER	REED	3/25/2014	COMPLETE	Edit	Delete	View

Total Employee(s) attending the Tailgate: 10

AMWTP Advanced Mixed Waste Treatment Project

Training Attendance Roster

Form-1316, Rev. 2
Effective Date: 08/04/10

Implementing Document: MP-RTQP-14.11

Course or Tailgate Number	Course Revision #	Course or Tailgate Title	Date Presented
TGTRU0000104	0	NCR Reportability - Failure to notify WIPP	3/25/14

Remarks Given to current SPMs who are assigned to SPO

Type of Training: ☐ Course ☒ Tailgate ☐ Test

Student Roster				Completion Status*
S No.	Print Name (Last, First, MI)	Signature	Date	
77582	Stykl, Nick R	Nick Stykl	3/25/14	
101278	MARQUARDT DAVE J	Dave Marquardt	3-25-14	
35927	Tedford, Gina K	Gina K Tedford	3/25/14	
085557	Fetzer, Pam	Pam Fetzer	3/25/14	
103164	Skaar, Wes A	Wes Skaar	3-25-14	
107808	Bynam, George	George Bynam	3/25/14	
102910	Kirk, Nancy D	Nancy Kirk	3/25/14	
78972	WALKER, REED A	Reed Walker	3/25/14	
103628	ROJAS, CESAR I	Cesar Rojas	3/25/14	

Name of person presenting training or proctoring exam:	Presenter's signature to verify attendance and completion status:	Date	*Show status as:
Eric Schweinsberg	Eric Schweinsberg	3/25/14	C – Completed P - Passed I - Incomplete N – No show F- Failed

DIVIDER

PAGE

AMWTP
Advanced Mixed Waste Treatment Project

NONCONFORMANCE REPORT

NCR No.: 75766

PARENT:

Title: RVU not completed

Category: WIPP Data	**Affected Item Type:** Container ID

Affected Item: 10052397

Originator: Storms, Matthew	**Date Opened:** 02/13/13
Source Type: As Found Condition	**ORPS Reportable:**

Source Type Doc. No.

ORPS No.:	**ORPS Category:**

Finding #:

Requirement Violated: MP-TRUW-8.9

Shipment No.	**Payload No.**
Equipment ID:	**PO Number:**

Batch No.

Container ID:

Tag Applied:	**No. of Tags:**

cription of Condition:

nciliation Lot BN835.84 included container 10052397. Container 10052397 was cored but no RVU suplement was generated to capture the final packaging configuration of the drum. The affected RTR batch is RTR05-04764.

Manager Review By:	**Manager Review Date:**
QA Closed-Cancelled By:	**QA Closed-Cancelled Date:**

Note: QA Closed-Cancelled Signature is based on concurrence between Responsible Manager and Quality Assurance

Is Valid:	**WIPP Submittal Req'd?**
Stop Work Order:	**Is CAR Req'd?**
HSS-OE Applicable:	**NTS Report Number:**
HSS-OE Reportable:	**NTS Report Date:**

HSS-OE Regulations

10 CFR 820:	**10 CFR 830 Subpart A:**
10 CFR 830 Subpart B:	**10 CFR 835 Rad Protection:**
10 CFR 851Safety/Health:	**Quality (Type Material):**
	Responsible Department:
	Functional Area:
	Disposition Due Date:
QA Mgr Rev Sign By:	**QA Mgr Rev Sign Date:**
	Date Due:
Disposition:	**Responsible Manager:**
	Assigned Actionee:

AMWTP
Advanced Mixed Waste Treatment Project

NONCONFORMANCE REPORT

NCR No.: 75766

PARENT:

Conditional Use:	Conditional Use Expiration Date:
USQ Screen Req'd?	USQ Screen No.:
Root Cause Analysis:	
Level A Cause Code:	Contributing Cause Level A:
Level B Cause Code:	Contributing Cause Level B:
Level C Cause Code:	Contributing Cause Level C:
Disposition Description:	
Mgr Disp App By:	Mgr Disp App Date:
QA Add'l Disp. Req'd By:	QA Add'l Disp. Req'd Date:
Mgr Add'l. Disp App By:	Mgr Add'l. Disp App Date:
QA Mgr Rev Disp Sign By:	QA Mgr Rev Disp Sign Date:
CAP Complete Comments:	
Action Complete By:	Action Complete Date:
QA Add'l Action Req'd By:	QA Add'l Action Req'd Date:
Add'l Action Complete By:	Add'l Action Complete Date:
QA Verification Complete By:	QA Verification Comp Date:

From:	Byram, George
To:	"wipp.notify@wipp.ws"
Cc:	Peterman, Susan M.; Schweinsberg, Eric; "Skaar, Wes"; Morse, Angie ; Fesmire Courtland; LaBruyere, Gary A.
Subject:	[NCR] 75801 and 75766
Date:	Thursday, February 21, 2013 2:16:24 PM
Attachments:	NCR 75801.pdf NCR 75766.pdf

Attached are NCRs 75801 and 75766 for CBFO notification in accordance with the WIPP Hazardous Waste Permit. Please contact me if you have any questions.

George Byram
TRU Programs
AMWTP Idaho Operations
2008-557-6319
208-521-3390

DIVIDER

PAGE

AMWTP
Advanced Mixed Waste Treatment Project

NONCONFORMANCE REPORT

NCR No.: 75801

PARENT:

Title: Reconciliation performed even though RVU not completed

Category: WIPP Data	**Affected Item Type:** Container ID
Affected Item: 10117553	
Originator: Byram, George	**Date Opened:** 02/14/13
Source Type: As Found Condition	**ORPS Reportable:**
Source Type Doc. No.	
ORPS No.:	**ORPS Category:**
Finding #:	
Requirement Violated: MP-TRUW-8.11 rev. 24 steps 3.1.1.2 and 3.2.15.1 and MP-TRU-8.5 rev. 28 step 3.2.5	
Shipment No. N/A	**Payload No.** N/A
Equipment ID: N/A	**PO Number:**
Batch No. RTR06-00507	
Container ID: 10117553	**Information Only**
Tag Applied: No	**No. of Tags:**

cription of Condition:

RVU associated with container 10117553 was not validated. The container was reconciled as part of BNINW216.77 and at the time of discovery of the nonconforming condition, the container had been certified with a WDS status of Presub_Cert. GTB 2/14/13

Manager Review By: George Byram	**Manager Review Date:** 02/21/13
QA Closed-Cancelled By:	**QA Closed-Cancelled Date:**

Note: QA Closed-Cancelled Signature is based on concurrence between Responsible Manager and Quality Assurance

Is Valid: Yes	**WIPP Submittal Req'd?** Yes
Stop Work Order: No	**Is CAR Req'd?** No
HSS-OE Applicable: Yes	**NTS Report Number:**
HSS-OE Reportable: No	**NTS Report Date:**

HSS-OE Regulations

10 CFR 820: No	**10 CFR 830 Subpart A:** Yes
10 CFR 830 Subpart B: No	**10 CFR 835 Rad Protection:** No
10 CFR 851Safety/Health: No	**Quality (Type Material):** Other
	Responsible Department: Waste Programs
	Functional Area: Reconciliation
	Disposition Due Date: 03/28/13
QA Mgr Rev Sign By: Lyle Ryman	**QA Mgr Rev Sign Date:** 03/07/13
	Date Due: 06/30/15
Disposition: Rework	**Responsible Manager:** Byram, George

AMWTP
Advanced Mixed Waste Treatment Project

NONCONFORMANCE REPORT

NCR No.: 75801

PARENT:

	Assigned Actionee:
Conditional Use:	**Conditional Use Expiration Date:**
USQ Screen Req'd?	**USQ Screen No.:**
Root Cause Analysis: No	
Level A Cause Code: A3 - Human Performance LTA	**Contributing Cause Level A:**
Level B Cause Code: B1 - Skill Based Error	**Contributing Cause Level B:**
Level C Cause Code: C04 - Infrequently Performed Steps Performed Incorrectly	**Contributing Cause Level C:**

Disposition Description:

Revise reconciliation lot BNINW216.77 and remove container 10117553.

Validate the RVU for container 10117553 through SPM. W Skaar 5/27/14
QA concurs with disposition. Objective evidence for closure of this NCR will be the revised recon lot BNINW216.77 and completed RVU validation through SPM for container 10117553. A. Morse 05-27-2014

Mgr Disp App By: Wesley Skaar	**Mgr Disp App Date:** 05/27/14
QA Add'l Disp. Req'd By:	**QA Add'l Disp. Req'd Date:**
Mgr Add'l. Disp App By:	**Mgr Add'l. Disp App Date:**
QA Mgr Rev Disp Sign By: Angela Morse	**QA Mgr Rev Disp Sign Date:** 05/27/14

CAP Complete Comments:

The correct reconciliation lot container 10117553 needs to be removed from is BNINW216.277 not BNINW216.77.
Container 10117553 has been removed from BNINW216.277 the revised reconciliation lot has been attached it can also be viewed on EDMS.
The RVU for container 10117553 in RTR06-00507 has been validated electronically through SPM level in WTS.
SPM Verification: SPM as verified all actions are complete and objective evidence is provided in supporting documentation to support closure. This NCR can be closed W Skaar 5/28/14

QA Verification/Closure: Verification of actions is complete and confirms approved disposisition is done. Objective evidence includes BNINW216.277, Rev. 2 and completion of RVU for Container 10117553, provided in supporting documentation of this NCR which supports final completion and closure. NCR 75801 is closed with no further actions required. A. Morse 05-29-2014

Action Complete By: Wesley Skaar	**Action Complete Date:** 05/28/14
QA Add'l Action Req'd By:	**QA Add'l Action Req'd Date:**
Add'l Action Complete By:	**Add'l Action Complete Date:**
QA Verification Complete By: Angela Morse	**QA Verification Comp Date:** 05/29/14

Byram, George

From: Byram, George
Sent: Thursday, February 21, 2013 2:16 PM
To: 'wipp.notify@wipp.ws'
Cc: Peterman, Susan M.; Schweinsberg, Eric; 'Skaar, Wes'; Morse, Angie ; Fesmire Courtland; LaBruyere, Gary A.
Subject: [NCR] 75801 and 75766
Attachments: NCR 75801.pdf; NCR 75766.pdf

Attached are NCRs 75801 and 75766 for CBFO notification in accordance with the WIPP Hazardous Waste Permit. Please contact me if you have any questions.

George Byram
TRU Programs
AMWTP Idaho Operations
2008-557-6319
208-521-3390

RECORD
BNINW216.277R2
B-2013-0013
SWALKER
0 2013

Reconciliation with Data Quality Objectives

Implementing Document: MP-TRUW-8.11

I certify by signature (below) that sufficient data have been collected to determine the following Program-required waste parameters:

WSPF No.: BNINW216.277 R2

Data Quality Objective	Yes	No	N/A	Comment
1. Have all containers in the lot been assigned an appropriate Waste Matrix Code?	☒	☐	☐	
2. Have waste material parameter weights been established for each container in the lot?	☒	☐	☐	
3. Does each waste container of waste contain transuranic (TRU) radioactive waste?	☒	☐	☐	
4. Have mean concentrations, 90% Upper Confidence Level (UCL_{90}) values for the mean concentration, standard deviations, and the number of samples collected for each Volatile Organic Compound (VOC) in the headspace gas of waste containers in the waste stream lot been evaluated against the constituent hazardous waste number assignments? (If applicable)	☐	☐	☒	Random solid sampling and analysis is performed in accordance with MP-Truw-8.2. Headspace gas sampling is not required for this waste stream.
5. For solid sampling, have mean concentrations, UCL_{90} values for the mean concentrations, standard deviations, and number of samples collected for VOCs, Semi-Volatile Organic Compounds (SVOCs), and metals in the waste stream lot been evaluated against the constituent hazardous waste number assignments? (if applicable)	☒	☐	☐	
6. Does the waste stream exhibit a toxicity characteristic (TC) under 40 CFR Part 261, Subpart C?	☒	☐	☐	

WSPF No.: BNINW216.277 R2

Data Quality Objective	Yes	No	N/A	Comment
7. Does the waste stream contain listed waste found in 20.4.1.200 NMAC incorporating 40 CFR Part 261, Subpart D?	☒	☐	☐	
8. Can the waste stream be classified as hazardous or nonhazardous at the UCL_{90}?	☒	☐	☐	
9. Was an appropriate packaging configuration and Drum Age Criteria (DAC) applied and documented in the headspace gas sampling documentation and was the drum age criteria met prior to sampling?	☐	☐	☒	Packaging configuration and DAC will be evaluated by CCP prior to headspace gas sampling. Confirmation of the correct packaging configuration and DAC will be performed by CCP prior to entering the headspace gas data into WDS.
10. Have all tentatively identified compounds (TICs) been appropriately identified and reported in accordance with the requirements of MP-TRUW-8.2, Quality Assurance Project Plan, Section C3-1, for the lot?	☐	☐	☒	Reconciliation Lot only. TICs are reported and tracked for the randomly selected containers for the waste stream per MP-TRUW-8.25.
11. Have the overall completeness, comparability, and representativeness quality assurance objectives (QAOs) been met for each of the analytical and testing procedures as specified in MP-TRUW-8.2, Section C3-2 through C3-9, for the lot?	☒	☐	☐	
12. Have the program required quantitation limits (PRQLs) for all analyses been met for the lot?	☒	☐	☐	

WSPF No.: BNINW216.277 R2

Data Quality Objective	Yes	No	N/A	Comment
13. Was an Open nonconformance report (NCR) search performed for all containers/pucks/source containers on the final list for the waste stream profile/reconciliation lot?	☒	☐	☐	
14. Was an Open NCR search performed for all batches in the final list for the waste stream profile/reconciliation lot?	☒	☐	☐	
15. Were all batches identified in the waste stream profile form (WSPF) or reconciliation lot complete through site project manager (SPM) signature release? List any batches identified as not complete through validation.	☒	☐	☐	
16. Were any open NCRs found that are applicable to the waste stream profile/reconciliation lot? List NCR, container, and batch.	☐	☒	☐	There are no open NCRs for any of the containers or batch data reports associated with the lot.
17. Is there an approved AK Sufficiency Determination for this waste stream?	☐	☒	☐	

	Printed name	Signature	Date
Site Project Manager	Wes Skaar	Wes Skaar	2/14/2013
2nd Site Project Manager	George Byram	George Byram	2/14/2013

WSPF Number: BNINW216 Lot Number: 277 R2

SPM

Printed Name: **Wes Skaar** Signature: Wes Skaar Date: **2/14/2013**

2nd SPM

Printed Name: **George Byram** **Signature:** George Byram **Date:** **2/14/2013**

SPM signature indicates that the information presented in this package is consistent with analytical batch reports and indicates concurrence with all information presented in this report.

WSPF Number: BNINW216 Lot Number: 277 R2

Characterization Information Summary

Characterization Description:

Container selection and number of samples for Headspace Gas Sampling of S5000 waste streams and Solids Sampling of S3000/S4000 waste streams have been evaluated and meet the requirements established in MP-TRUW-8.25, Random Selection of Containers for Headspace Gas and Solids Sampling and Analysis.

Y ☒ N ☐ NA ☐

For "N" or "NA," provide rationale.

Reconciliation was performed on validated drum file containers obtained from waste stream BNINW216, Revision 1, First/Second Stage Sludge from the Rocky Flats Environmental Technology Site (RFETS). This Reconciliation Lot BNINW216.277 R2 consists of 55 containers of mixed transuranic waste. Each container file was analyzed and all data were reconciled using MP-TRUW-8.11 and MP-TRUW-8.14 WIPP approved procedures.

The absence of prohibited items is determined and documented through acceptable knowledge and confirmation activities. Radiography or visual examination is performed on each container in this waste stream as a confirmation activity. See Table 5 for the associated RTR and Visual examinations. None of the listed containers contains prohibited items as defined by Section C-1c of the Advanced Mixed Waste Treatment Project Quality Assurance Project Plan (QAPjP), MP-TRUW-8.2. The total metal, VOC, SVOC analytical results and container data are found in the Characterization Information Summary from waste stream BNINW216, Lot 1, Revision 1, Lot 3, Lot 4, Lot 5, Lot 6, Lot 7, Lot 8, Lot 9, lot 10, Lot 11, Lot 12, Lot 13, Lot 14, Lot 15, Lot 17, Lot 18 Lot 19, Lot 20 and/or Lot 21.

The revision was necessary as result of ETR review of containers: 10002806, 10005761, 10007779, 10010204, 10052576 and 10083036.
Revision 2 was necessary to remove container 10117553 to update RVU status in WTS.

WSPF Number: BNINW216 Lot Number: 277 R2

Table 5. Correlation of Container Identification Numbers to Data Package.

Container No.	Headspace Gas Analysis Data Package	RTR Data Package	RA Data Package	VE Data Package	Solid Sampling Data Package	Solid Analysis Data Package
10002806	N/A	RTR03-00073	ASY03-00437	N/A	N/A	N/A
10005761	N/A	RTR03-00081	ASY03-00501	N/A	N/A	N/A
10007779	N/A	RTR04-00002	ASY04-00593	N/A	N/A	N/A
10010204	N/A	RTR04-00028	ASY04-00137	N/A	N/A	N/A
10024428	N/A	RTR05-03624	ASY05-04150	N/A	N/A	N/A
10025253	N/A	RTR11-00043	ASY11-00378	N/A	N/A	N/A
10044194	N/A	RTR05-02204	ASY05-02606	N/A	N/A	N/A
10052576	N/A	RTR05-06363	ASY05-07125	N/A	N/A	N/A
10055490	N/A	RTR06-00436	ASY06-02004	N/A	N/A	N/A
10083036	N/A	RTR06-00146	ASY06-00696	N/A	N/A	N/A
10083055	N/A	RTR06-00213	ASY06-00942	N/A	N/A	N/A
10085537	N/A	RTR06-00313	ASY06-01411	N/A	N/A	N/A
10090931	N/A	RTR06-00337	ASY06-01417	N/A	N/A	N/A
10093609	N/A	RTR06-00264	ASY06-01242	N/A	N/A	N/A
10093633	N/A	RTR06-00264	ASY06-01242	N/A	N/A	N/A
10093635	N/A	RTR06-00268	ASY06-01194	N/A	N/A	N/A
10097599	N/A	RTR06-00292	ASY06-01380	N/A	N/A	N/A
10102464	N/A	RTR06-00308	ASY06-01637	N/A	N/A	N/A
10105298	N/A	RTR06-00364	ASY10-01713	N/A	N/A	N/A
10106227	N/A	RTR06-00357	ASY06-01703	N/A	N/A	N/A
10106725	N/A	RTR06-00389	ASY06-02023	N/A	N/A	N/A
10107499	N/A	RTR06-00342	ASY06-01787	N/A	N/A	N/A
10108327	N/A	RTR06-00466	ASY06-02419	N/A	N/A	N/A
10109301	N/A	RTR06-00445	ASY06-02268	N/A	N/A	N/A
10112379	N/A	RTR07-00062	ASY07-00107	N/A	N/A	N/A
10112526	N/A	RTR06-00452	ASY06-02552	N/A	N/A	N/A
10113402	N/A	RTR06-00472	ASY06-02685	N/A	N/A	N/A
10116497	N/A	RTR06-00488	ASY06-02777	N/A	N/A	N/A
10118284	N/A	RTR06-00592	ASY06-03442	N/A	N/A	N/A
10120649	N/A	RTR06-00463	ASY10-01148	N/A	N/A	N/A
10123037	N/A	RTR06-00560	ASY07-00018	N/A	N/A	N/A
10130595	N/A	RTR07-00382	ASY07-00397	N/A	N/A	N/A
10132059	N/A	RTR06-00584	ASY06-03327	N/A	N/A	N/A
10199951	N/A	RTR08-00051	ASY09-01819	N/A	N/A	N/A
10207335	N/A	RTR08-00143	ASY08-01561	N/A	N/A	N/A
10207673	N/A	RTR08-00143	ASY08-01570	N/A	N/A	N/A
10208865	N/A	RTR08-00143	ASY08-01561	N/A	N/A	N/A
10213479	N/A	RTR08-00141	ASY09-01240	N/A	N/A	N/A
10243851	N/A	RTR12-00097	ASY12-01693	N/A	N/A	N/A

WSPF Number: BNINW216 Lot Number: 277 R2

10356437	N/A	RTR11-00035	ASY11-00275	N/A	N/A	N/A
10359730	N/A	RTR11-00313	ASY11-02321	N/A	N/A	N/A
10359949	N/A	RTR11-00313	ASY11-02321	N/A	N/A	N/A
10365493	N/A	RTR11-00029	ASY11-00223	N/A	N/A	N/A
10366248	N/A	RTR11-00029	ASY11-00232	N/A	N/A	N/A
10375704	N/A	RTR11-00033	ASY11-00256	N/A	N/A	N/A
10383643	N/A	RTR11-00033	ASY11-00259	N/A	N/A	N/A
10387430	N/A	RTR10-00285	ASY10-02631	N/A	N/A	N/A
10387497	N/A	RTR10-00284	ASY10-02630	N/A	N/A	N/A
10388062	N/A	RTR11-00029	ASY11-00223	N/A	N/A	N/A
10389676	N/A	RTR11-00029	ASY11-00223	N/A	N/A	N/A
10389793	N/A	RTR11-00029	ASY11-00223	N/A	N/A	N/A
10390742	N/A	RTR11-00029	ASY11-00258	N/A	N/A	N/A
10391333	N/A	RTR11-00052	ASY11-00387	N/A	N/A	N/A
10392152	N/A	RTR11-00045	ASY11-00324	N/A	N/A	N/A
10415871	N/A	RTR11-00330	ASY11-01975	N/A	N/A	N/A

Note: Footnotes will be added as applicable.

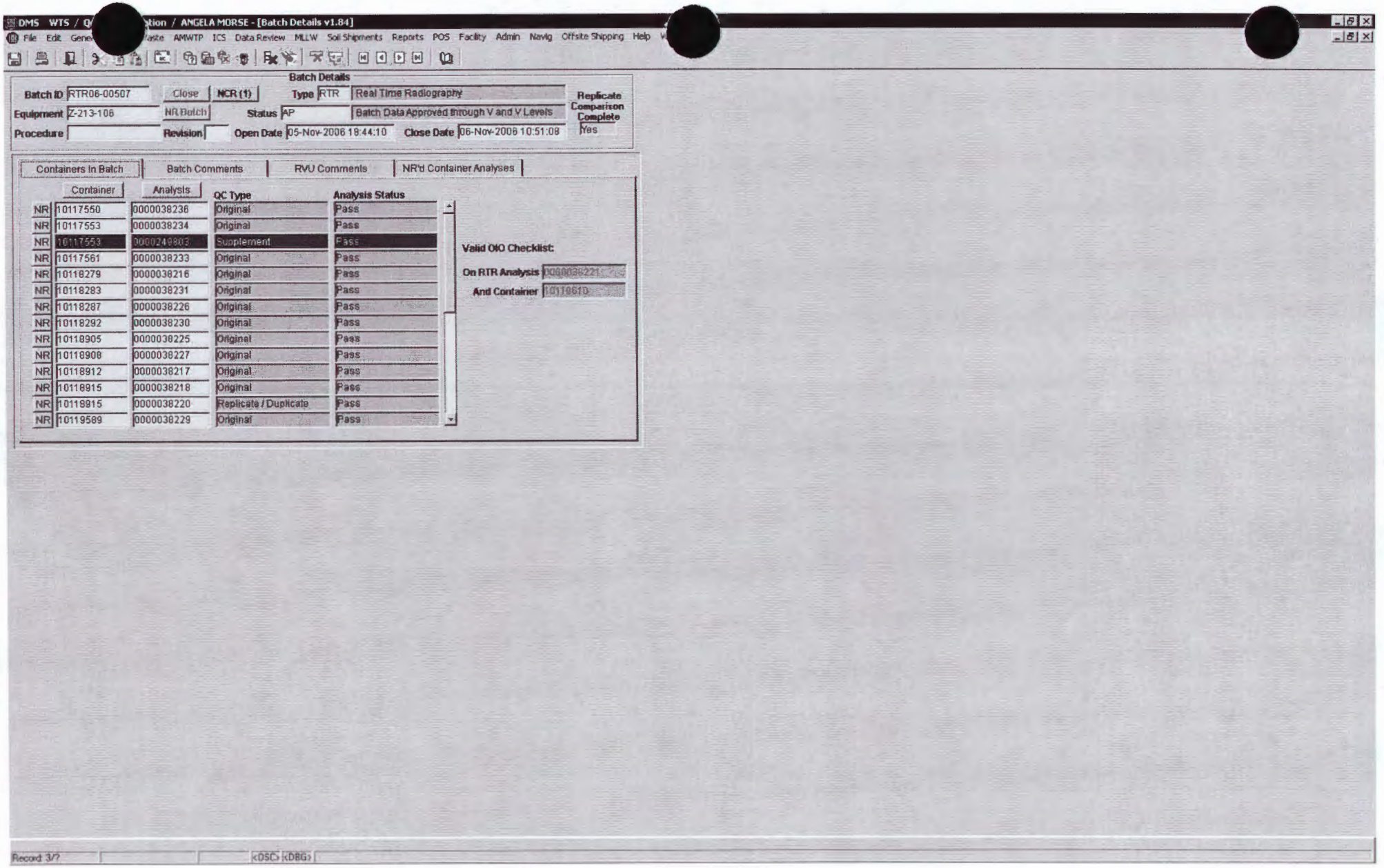
DMS WTS / Q
tion / ANGELA MORSE - [Batch Details v1.84]
File Edit Gene
aste AMWTP ICS Data Review MLLW Soil Shipments Reports POS Facility Admin Navig Offsite Shipping Help
Batch Details
Batch ID RTR06-00507
Close
NCR (1)
Type RTR
Real Time Radiography
Replicate Comparison Complete
Equipment Z-213-106
NR Batch
Status AP
Batch Data Approved through V and V Levels
Yes
Procedure
Revision
Open Date 05-Nov-2006 18:44:10
Close Date 06-Nov-2006 10:51:08
Containers In Batch
Batch Comments
RVU Comments
NR'd Container Analyses
Container
Analysis
QC Type
Analysis Status
NR 10117550 0000038236 Original Pass
NR 10117553 0000038234 Original Pass
NR 10117553 0000249803 Supplement Pass
NR 10117561 0000038233 Original Pass
NR 10118279 0000038216 Original Pass
NR 10118283 0000038231 Original Pass
NR 10118287 0000038226 Original Pass
NR 10118292 0000038230 Original Pass
NR 10118905 0000038225 Original Pass
NR 10118908 0000038227 Original Pass
NR 10118912 0000038217 Original Pass
NR 10118915 0000038218 Original Pass
NR 10118915 0000038220 Replicate / Duplicate Pass
NR 10119589 0000038229 Original Pass
Valid OIO Checklist:
On RTR Analysis
And Container
Record 3/?
<DSC> <DBG>

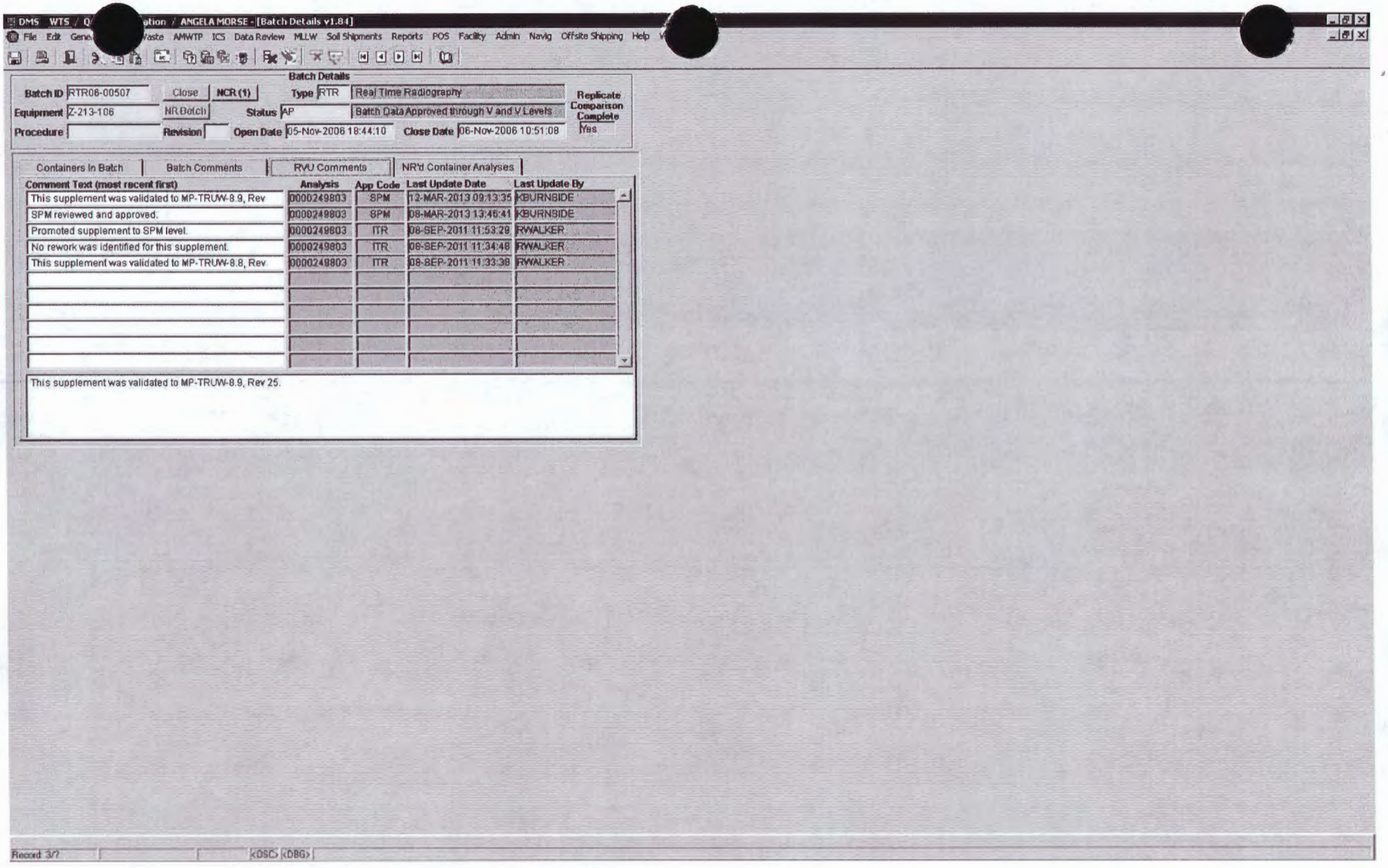
DMS WTS / Q / ANGELA MORSE - [Batch Details v1.84]
File Edit Gene Waste AMWTP ICS Data Review MLLW Soil Shipments Reports POS Facility Admin Navig Offsite Shipping Help
Batch Details
Batch ID RTR06-00507
Close
NCR (1)
Type RTR Real Time Radiography
Replicate Comparison Complete
Equipment Z-213-106
NR Batch
Status AP Batch Data Approved through V and V Levels
Procedure
Revision
Open Date 05-Nov-2006 18:44:10
Close Date 06-Nov-2006 10:51:08
Yes
Containers In Batch
Batch Comments
RVU Comments
NR'd Container Analyses
Comment Text (most recent first)
Analysis
App Code
Last Update Date
Last Update By
This supplement was validated to MP-TRUW-8.9, Rev
0000249803
SPM
12-MAR-2013 09:13:35
KBURNSIDE
SPM reviewed and approved.
0000249803
SPM
08-MAR-2013 13:46:41
KBURNSIDE
Promoted supplement to SPM level.
0000249803
ITR
08-SEP-2011 11:53:29
RWALKER
No rework was identified for this supplement.
0000249803
ITR
08-SEP-2011 11:34:48
RWALKER
This supplement was validated to MP-TRUW-8.8, Rev
0000249803
ITR
08-SEP-2011 11:33:38
RWALKER
This supplement was validated to MP-TRUW-8.9, Rev 25.
Record 3/?
<OSC>
<DBG>

GEN6

AMWTP Advanced Mixed Waste Treatment Project

NON-CONFORMANCE REPORT

WIPP DATA - RTR

NCR #: 81196

Title: RTR Characterization	
Originator: Kuck, Frank	**Date Opened:** 10/10/13
Tag Applied: Yes	**Responsible Dept:** Plant Manager
Container ID: 10272666	**Batch #:** RTR13-00238

Characterization Problem: Sealed Containers >4 Liters

LIQUIDS IDENTIFIED

Observable Liquid shall be less than 1% by Volume of the outermost container. Equal/Greater than 1% Volume?

Internal containers with more than 60 mL or 3% by Volume Observable Liquid is Prohibited. Greater than 60ML/3% Volume?

Containers with Hazardous Waste Number (HWN) U134 assigned shall have no observable liquid. Observable liquid identified?

Originator Sign By: Frank Kuck	**Originator Sign Date:** 10/10/13

Production Comments:

Approved Remediation: Supercompaction.

Large metal cans located throughout the waste.

Performed By: Kenny Burnside	**Performed Date:** 01/23/14

Waste Programs Evaluation/Verification:

SPM Verification: This container has been processed through RTR and Assay characterization. The data has been reviewed and determined to be acceptable for MLLW direct feed supercompaction. SPM has further verified that the task list has been set to a Process Code of SC, and supercompaction is shown as a required task for this container. This NCR is recomended for closure in preparation for supercompaction of this waste. KB 1/23/13

SPM Verification Complete By: Kenny Burnside	**SPM Verification Complete Date:** 01/23/14
MLLW/LLW Verification Complete By:	**MLLW/LLW Verification Complete Date:**

QA Closure Comments:

QA Verification: Verified in WTS the container has been successfully processed through RTR and Assay characterization. The data has been reviewed and determined acceptable for MLLW direct feed supercompaction. Verified that the task list has been set to a Process Code of SC and supercompaction is shown as a required task for this container. No further action is required.
C. Robison 01-23-14

QA Add'l Action Reqd By:	**QA Add'l Action Reqd Date:**
QA Verification Complete By: Camille Robison	**QA Verification Comp Date:** 01/23/14

DIVIDER

PAGE

Use as is

AMWTP
Advanced Mixed Waste Treatment Project

NONCONFORMANCE REPORT

NCR No.: 81217
PARENT:

Title: Failed check drum in assay 102

Category: Other	**Affected Item Type:** Equipment ID
Affected Item: Z-211-102	
Originator: Kearn, Kent	**Date Opened:** 10/11/13
Source Type: As Found Condition	**ORPS Reportable:** No
Source Type Doc. No.	
ORPS No.:	**ORPS Category:**
Finding #:	
Requirement Violated: OI-14 rev 33 4.3	
Shipment No.	**Payload No.**
Equipment ID: Z-211-102	**PO Number:**
Batch No.	
Container ID:	
Tag Applied: Yes	**No. of Tags:** 1

Description of Condition:

Assay 102
AWA Pu240 effective mass [UD: 5.4600E-001+/- 0.016. No value. -3.4623E+001.
sequence number 137876
tag applied to Assay 102 supervisor monitor

Manager Review By: Steve Massey	**Manager Review Date:** 10/11/13
QA Closed-Cancelled By:	**QA Closed-Cancelled Date:**

Note: QA Closed-Cancelled Signature is based on concurrence between Responsible Manager and Quality Assurance

Is Valid: Yes	**WIPP Submittal Req'd?** No
Stop Work Order: No	**Is CAR Req'd?** No
HSS-OE Applicable: No	**NTS Report Number:**
HSS-OE Reportable: No	**NTS Report Date:**

HSS-OE Regulations

10 CFR 820: No	**10 CFR 830 Subpart A:** No
10 CFR 830 Subpart B: No	**10 CFR 835 Rad Protection:** No
10 CFR 851Safety/Health: No	**Quality (Type Material):** Class 1 Equipment - WIPP
Information Only	**Responsible Department:** Plant Manager
	Functional Area: Characterization
	Disposition Due Date: 10/31/13
QA Mgr Rev Sign By: Angela Morse	**QA Mgr Rev Sign Date:** 10/12/13
	Date Due: 10/13/13

AMWTP
Advanced Mixed Waste Treatment Project

NONCONFORMANCE REPORT

NCR No.: 81217

PARENT:

Disposition: Use As Is	**Responsible Manager:** Massey, Steve
	Assigned Actionee:
Conditional Use: No	**Conditional Use Expiration Date:**
USQ Screen Req'd? NO	**USQ Screen No.:**
Root Cause Analysis: No	
Level A Cause Code: A2 - Equipment/Material Problem	**Contributing Cause Level A:**
Level B Cause Code: B1 - Calibration for Instruments LTA	**Contributing Cause Level B:**
Level C Cause Code: C02 - Equipment Outside Acceptance Criteria	**Contributing Cause Level C:**

Disposition Description:

During the performance of the ncs performance check container, the assay machine identified a self revealing failure on the pu-240 effective mass parameter. The machine reported 0 g of pu-240. This failure occurs when the machine doesn't process the neutron data collected. The check drum was assayed a few more times without modification to the machine. One container failed at an investigate level, but all other runs passed within parameters. The machine is operating acceptably and within its limits. The disposition shall be use as is. s/s: S. Turner 10-13-2013 via attached email

QA Comment: Responsible manager provided email for disposition/processing of NCR by QA; see email provided in supporting documentation. A. Morse 10-13-2013

Mgr Disp App By: Angela Morse	**Mgr Disp App Date:** 10/13/13
QA Add'l Disp. Req'd By:	**QA Add'l Disp. Req'd Date:**
Mgr Add'l. Disp App By:	**Mgr Add'l. Disp App Date:**
QA Mgr Rev Disp Sign By: Angela Morse	**QA Mgr Rev Disp Sign Date:** 10/13/13

CAP Complete Comments:

The machine is operating acceptably and within its limits. The disposition shall be use as is. s/s: S. Turner 10-13-2013 via attached email

QA Verification: Disposition has been satisfactorily implemented for use as is condition; no further action required, NCR 81217, is closed. A. Morse 10-13-2013

Action Complete By: Angela Morse	**Action Complete Date:** 10/13/13
QA Add'l Action Req'd By:	**QA Add'l Action Req'd Date:**
Add'l Action Complete By:	**Add'l Action Complete Date:**
QA Verification Complete By: Angela Morse	**QA Verification Comp Date:** 10/13/13

DIVIDER

PAGE

AMWTP
Advanced Mixed Waste Treatment Project

NON-CONFORMANCE REPORT

WIPP DATA - RTR

NCR #: 82907

Title: RTR Characterization	
Originator: Jordan, Shawn	**Date Opened:** 12/16/13
Responsible Dept: Plant Manager	**Batch #:** RTR13-00324
Container ID: 10355574	**Tag Applied:** Yes
Characterization Problem:	
Originator Sign By: Shawn Jordan	**Originator Sign Date:** 12/16/13

Production Comments: **Approved Remediation:** **ARP Remediation**

12.5 pints of liquid between the liner and drum. SJ. 12/16/13
Container is slated to be transferred to WMF-1617 Sludge Repackage Project (SRP) for Treatment/Remediation; Approved Remediation has been changed to "ARP Remediation" KLB 6/11/14

Performed By: Kathy Birch	**Performed Date:** 06/12/14

Waste Programs Evaluation/Verification:

This drum is comprised of CCP sludge waste and is slated for Sludge Repack Processing (SRP) at CWI. The container has been identified in IWTS for SRP, as evidence in the attached file. KLB 6/12/14

SPM Verification Complete By: Kathy Birch	**SPM Verification Complete Date:** 06/12/14
MLLW/LLW Verification Complete By:	**MLLW/LLW Verification Complete Date:**

QA Closure Comments:

QA Verification: Container data identified on IWTS Ship Task SRP14-044 report has been reviewed and verified accurate in WTS for transfer to CWI for Sludge Repack Processing. The container is identified on the attached Ship Task List. No further action required. T. Cook 6/12/14

QA Add'l Action Reqd By:	**QA Add'l Action Reqd Date:**
QA Verification Complete By: Terry Cook	**QA Verification Comp Date:** 06/12/14

Informati

SRP14-044

Ship Task SRP14-044 Waste Transfer to CWI

RWMC-WMF1617

Information Only

Task Definition

Originating Facility		Destination Unit
AMWTP : WMF636 Idaho Treatment Group, LLC. Advanced Mixed Waste Treatment Project TSA Retrieval Bldg (WMF-636) Idaho Falls, ID ☑ **System Controlled as of:** 01-Jan-1950 12:00 AM	**16-Jun-2014** **12:00:00 AM** **Shipment**	**RWMC : WMF1617** CH2M-WG Idaho, LLC. Radioactive Waste Management Complex RWMC-WMF1617 Idaho Falls, ID ☑ **System Controlled as of:** 18-Oct-2012 12:00 AM

Load or Campaign ID: _____

Charge No: _____

Execution

	Name: **Phone:** **FAX:** **E-Mail:**

	Name: **Phone:** **FAX:** **E-Mail:**

Status

Record Status

- ☐ **Active**
- ☑ **Pending**
- ☐ **Cancelled**

Record Status

- ☐ **Locked (user and date):** _____ _____
- ☑ **Unlocked**

Record Status

User: LundholmD

Date: 12-Jun-2014 08:58:07 AM

Containers

Barcode	Unit From	Approved Mat. Profile	Approved Container	Reject	Container	Common Name of Material
10007372	WMF636	☑	☐	☐	0.3142-M3 DM	Rocky Flats inorganic sludge (BNINW216 and BNINW218)
10007575	WMF636	☑	☐	☐	0.3142-M3 DM	Rocky Flats inorganic sludge (BNINW216 and BNINW218)
10008619	WMF636	☑	☐	☐	0.3142-M3 DM	Rocky Flats inorganic sludge (BNINW216 and BNINW218)
10010460	WMF636	☑	☐	☐	0.3142-M3 DM	Rocky Flats inorganic sludge (BNINW216 and BNINW218)
10014999	WMF636	☑	☐	☐	0.3142-M3 DM	Rocky Flats inorganic sludge (BNINW216 and BNINW218)
10017774	WMF636	☑	☐	☐	0.3142-M3 DM	Rocky Flats inorganic sludge (BNINW216 and BNINW218)
10115630	WMF636	☑	☐	☐	0.3142-M3 DM	Rocky Flats inorganic sludge (BNINW216 and BNINW218)

Containers

Barcode	Unit From	Approved Mat. Profile	Approved Container	Reject	Container	Common Name of Material
10131987	WMF636	☑	☐	☐	0.3142-M3 DM	Rocky Flats inorganic sludge (BNINW216 and BNINW218)
10134706	WMF636	☑	☐	☐	0.3142-M3 DM	Rocky Flats inorganic sludge (BNINW216 and BNINW218)
10137203	WMF636	☑	☐	☐	0.3142-M3 DM	Rocky Flats inorganic sludge (BNINW216 and BNINW218)
10137955	WMF636	☑	☐	☐	0.3142-M3 DM	Rocky Flats inorganic sludge (BNINW216 and BNINW218)
10137962	WMF636	☑	☐	☐	0.3142-M3 DM	Rocky Flats inorganic sludge (BNINW216 and BNINW218)
10147147	WMF636	☑	☐	☐	0.3142-M3 DM	Rocky Flats inorganic sludge (BNINW216 and BNINW218)
10151457	WMF636	☑	☐	☐	0.3142-M3 DM	Rocky Flats inorganic sludge (BNINW216 and BNINW218)
10151566	WMF636	☑	☐	☐	0.3142-M3 DM	Rocky Flats inorganic sludge (BNINW216 and BNINW218)
10160074	WMF636	☑	☐	☐	0.3142-M3 DM	Rocky Flats inorganic sludge (BNINW216 and BNINW218)
10162549	WMF636	☑	☐	☐	0.3142-M3 DM	Rocky Flats inorganic sludge (BNINW216 and BNINW218)
10162696	WMF636	☑	☐	☐	0.3142-M3 DM	Rocky Flats inorganic sludge (BNINW216 and BNINW218)
10162806	WMF636	☑	☐	☐	0.3142-M3 DM	Rocky Flats inorganic sludge (BNINW216 and BNINW218)
10166852	WMF636	☑	☐	☐	0.3142-M3 DM	Rocky Flats inorganic sludge (BNINW216 and BNINW218)
10166860	WMF636	☑	☐	☐	0.3142-M3 DM	Rocky Flats inorganic sludge (BNINW216 and BNINW218)
10167828	WMF636	☑	☐	☐	0.3142-M3 DM	Rocky Flats inorganic sludge (BNINW216 and BNINW218)
10167834	WMF636	☑	☐	☐	0.3142-M3 DM	Rocky Flats inorganic sludge (BNINW216 and BNINW218)
10167866	WMF636	☑	☐	☐	0.3142-M3 DM	Rocky Flats inorganic sludge (BNINW216 and BNINW218)
10167922	WMF636	☑	☐	☐	0.3142-M3 DM	Rocky Flats inorganic sludge (BNINW216 and BNINW218)
10170413	WMF636	☑	☐	☐	0.3142-M3 DM	Rocky Flats inorganic sludge (BNINW216 and BNINW218)
10174058	WMF636	☑	☐	☐	0.3142-M3 DM	Rocky Flats inorganic sludge (BNINW216 and BNINW218)
10177862	WMF636	☑	☐	☐	0.3142-M3 DM	Rocky Flats inorganic sludge (BNINW216 and BNINW218)
10177976	WMF636	☑	☐	☐	0.3142-M3 DM	Rocky Flats inorganic sludge (BNINW216 and BNINW218)
10180942	WMF636	☑	☐	☐	0.3142-M3 DM	Rocky Flats inorganic sludge (BNINW216 and BNINW218)
10206149	WMF636	☑	☐	☐	0.3142-M3 DM	Rocky Flats inorganic sludge (BNINW216 and BNINW218)
10295858	WMF636	☑	☐	☐	0.3142-M3 DM	Rocky Flats inorganic sludge (BNINW216 and BNINW218)

Containers

Barcode	Unit From	Approved Mat. Profile	Approved Container	Reject	Container	Common Name of Material
10300832	WMF636	☑	☐	☐	0.3218-M3 DM	Rocky Flats inorganic sludge (BNINW216 and BNINW218)
10311735	WMF636	☑	☐	☐	0.3142-M3 DM	Rocky Flats inorganic sludge (BNINW216 and BNINW218)
10355574	WMF636	☑	☐	☐	0.3218-M3 DM	Rocky Flats inorganic sludge (BNINW216 and BNINW218)
10401451	WMF636	☑	☐	☐	0.3142-M3 DM	Rocky Flats inorganic sludge (BNINW216 and BNINW218)
10447098	WMF636	☑	☐	☐	0.3142-M3 DM	Rocky Flats inorganic sludge (BNINW216 and BNINW218)
10456532	WMF636	☑	☐	☐	0.3142-M3 DM	Rocky Flats inorganic sludge (BNINW216 and BNINW218)
10461691	WMF636	☑	☐	☐	0.3218-M3 DM	Rocky Flats inorganic sludge (BNINW216 and BNINW218)
10466275	WMF636	☑	☐	☐	0.3218-M3 DM	Rocky Flats inorganic sludge (BNINW216 and BNINW218)
10494321	WMF636	☑	☐	☐	0.3218-M3 DM	Rocky Flats inorganic sludge (BNINW216 and BNINW218)

Grid Locations

Barcode	Rej.	Previous Task ID	Previous Grid Location			New Grid Location		
			Grid X	Grid Y	Grid Z	Grid X	Grid Y	Grid Z
10007372	☐							
10007575	☐							
10008619	☐							
10010460	☐							
10014999	☐							
10017774	☐							
10115630	☐							
10131987	☐							
10134706	☐							
10137203	☐							
10137955	☐							
10137962	☐							
10147147	☐							
10151457	☐							
10151566	☐							
10160074	☐							
10162549	☐							
10162696	☐							
10162806	☐							

Grid Locations

Barcode	Rej.	Previous Task ID	Previous Grid Location			New Grid Location		
			Grid X	Grid Y	Grid Z	Grid X	Grid Y	Grid Z
10166852	☐							
10166860	☐							
10167828	☐							
10167834	☐							
10167866	☐							
10167922	☐							
10170413	☐							
10174058	☐							
10177862	☐							
10177976	☐							
10180942	☐							
10206149	☐							
10295858	☐							
10300832	☐							
10311735	☐							
10355574	☐							
10401451	☐							
10447098	☐							
10456532	☐							
10461691	☐							
10466275	☐							
10494321	☐							

Container Count (excluding rejects): 41

General Information (If Applicable)

Shipment is: ☐ Bulk ☐ Containerized

Are containers palletized?: ☐ Yes ☐ No

If yes, give number of pallets: _____ **and size:** _____

DOT Segregation Requirements: _____

Special Handling Required?: ☐ Yes ☐ No

If yes, summarize handling means below, and submit design to receiving organization:

Verification, Review, and Approval (If Applicable)

Are Approvals Required? ☐ Yes ☐ No _____

Signature Date: _____

Certification

Shipment Certifier: ☐ _____

Signature Date: _____

Name: _____
Phone: _____
FAX: _____
E-Mail: _____
Pager: _____

List Approving Organization:

Approvals

WGS Approval: ☐ _____

Signature Date: _____

Name: _____
Phone: _____
FAX: _____
E-Mail: _____
Pager: _____

Packaging and Traffic Approval: ☐ _____

Signature Date: _____

Name: _____
Phone: _____
FAX: _____
E-Mail: _____
Pager: _____

Receiving Facility Approval: ☐ _____

Signature Date: _____

Name: _____
Phone: _____
FAX: _____
E-Mail: _____
Pager: _____

DIVIDER

PAGE

Rework

AMWTP Advanced Mixed Waste Treatment Project

NONCONFORMANCE REPORT

NCR No.: 82950

PARENT:

Title: RTR System X-ray System Error "Undervoltage Anode Generator"

Category: Maintenance	**Affected Item Type:** Other
Affected Item: GE Isovolt 450 Titan X-ray System#1	
Originator: Gilk, Gregory	**Date Opened:** 12/19/13
Source Type: As Found Condition	**ORPS Reportable:** No
Source Type Doc. No.	
ORPS No.:	**ORPS Category:** NA
Finding #:	
Requirement Violated: INST-OI-115	
Shipment No.	**Payload No.**
Equipment ID:	**PO Number:**
Batch No.	
Container ID:	
Tag Applied: Yes	**No. of Tags:** 1

Description of Condition:

Unit taken out of service due to flashover at anode generator HV cable connection. Error # 41, "Overcurrent Anode has Released" at 420 kV, 2 mA during warmup. Second warmup attempt resulted in immediate Error# 126, "Undervoltage Anode Generator" .
The following System# 1 Components shall be repaired in-house.

Anode Generator Replace damaged HV socket
ID No. 2511330
S/N 05 0349-00

X-ray Tube/Cables Replace damaged anode cable.
ID No 420M1/25-55
S/N 12 2436

Manager Review By: Trackwise AdminstratorTrackwise Administrator	**Manager Review Date:** 12/25/1312/26/13
QA Closed-Cancelled By:	**QA Closed-Cancelled Date:**

Note: QA Closed-Cancelled Signature is based on concurrence between Responsible Manager and Quality Assurance

Is Valid: Yes	**WIPP Submittal Req'd?** No
Stop Work Order: No	**Is CAR Req'd?** No
HSS-OE Applicable: Yes	**NTS Report Number:**
HSS-OE Reportable: No	**NTS Report Date:**

HSS-OE Regulations

10 CFR 820: No	**10 CFR 830 Subpart A:** Yes
10 CFR 830 Subpart B: No	**10 CFR 835 Rad Protection:** No
10 CFR 851Safety/Health: No	**Quality (Type Material):** Class 1 Equipment - Non WIPP

formation Only

Responsible Department:
Plant Manager

Functional Area:
Engineering

AMWTP
Advanced Mixed Waste Treatment Project

NONCONFORMANCE REPORT

NCR No.: 82950

PARENT:

	Disposition Due Date: 02/05/14
QA Mgr Rev Sign By: Gary Labruyere	**QA Mgr Rev Sign Date:** 01/15/14
	Date Due: 03/30/14
Disposition: Rework	**Responsible Manager:** Gilk, Gregory
	Assigned Actionee:
Conditional Use: No	**Conditional Use Expiration Date:**
USQ Screen Req'd? NO	**USQ Screen No.:**
Root Cause Analysis: No	
Level A Cause Code: A7 - Other Problem	**Contributing Cause Level A:**
Level B Cause Code: B4 - No Cause is Applicable	**Contributing Cause Level B:**
Level C Cause Code: C01 - No Cause is Known for This Event	**Contributing Cause Level C:**

Disposition Description:

Replace damaged anode socket and anode cable under WO# 480352.
Attach completed RIR for PO#'s 14-625, 14-644 and completed installation WO# 480352 to this NCR

QA concurs with the proposed disposition. MJK 01/28/2014

Mgr Disp App By: Gregory Gilk	**Mgr Disp App Date:** 01/30/14
QA Add'l Disp. Req'd By:	**QA Add'l Disp. Req'd Date:**
Mgr Add'l. Disp App By:	**Mgr Add'l. Disp App Date:**
QA Mgr Rev Disp Sign By: Gary Labruyere	**QA Mgr Rev Disp Sign Date:** 01/30/14

CAP Complete Comments:

Action complete. See attached objective evidence. Please route for closure GJG 10/01/14
QA closure verification. Re-work Complete see attached WO# 479684, 479574 and RIRs for 14-625 and 14-644. G. LaBruyere 10/02/14

Locked @ e Files w/NCR

Action Complete By: Gregory Gilk	**Action Complete Date:** 10/01/14
QA Add'l Action Req'd By:	**QA Add'l Action Req'd Date:**
Add'l Action Complete By:	**Add'l Action Complete Date:**
QA Verification Complete By: Gary Labruyere	**QA Verification Comp Date:** 10/02/14

Information Only

Work Order#: 479684 Asset #: Z-213-106

AMWTP Advanced Mixed Waste Treatment Project

Idaho Treatment Group

Work Order

Record #: 479684

Replace X-ray Generator Socket.

Remove good cable socket from junk generator and install in good generator with failed socket.

Reinstall failed socket into junk generator.

Grease and reinstall x-ray cables.

Work has been evaluated and can be performed as Type 4 work under OE-024

Equipment: Z-213-106 Real Time Radioscopy Unit, VJ Technologies, w/X-ray

Location: WMF634 Characterization

Planner: Doug Hoover **Phone:** 557-6467

Engineer: Greg Gilk **Phone:** 557-0951 **Workgroup:** SYSGRP

Priority: 2 **Target Comp Date:** 1/12/2014 **Reported On:** 1/11/2014

Type: CM-4 **Status:** APPR **Requestor Name:** Greg Gilk

PM #: **PM Attachment(s):** N/A **Requestor Phone:** 557-0951

Job Plan #: **Job Plan Attachment(s):** N/A **M.S.A.:**

Job Completed By: GREG GILK (Name) _____ (Signature) 1/13/14 (Date)

Functional Verification (FV) Required?: Y [ ] N [X] **If Yes, FV Completed Successfully?:** Y [ ] N [ ]

Post-Maintenance Test (PMT) Required?: Y [ ] N [X] **If Yes, PMT Completed Successfully?:** Y [ ] N [ ]

FV/PMT N/A [X] **Justification:** FV WILL BE UNDER WO# 479574

Technician Acceptance: N/A (Name) _____ (Signature) _____ (Date)

TSO/TPC Removed?: Y [ ] N [ ] N/A [X]

Equipment Returned to Service?: Y [ ] N [X] N/A [ ] 0900 (Time)

Operations PSM/SS Concurrence: Steve Massey (Name) _____ (Signature) 01/17/14 (Date)

WG Supervisor Review: _____ (Name) _____ (Signature) Form 1752 Attached: Y [ ] N [X]

Planner Review and MH Updated: Doug Hoover (Name) _____ (Signature) 1-27-14 (Date)

Follow-up WO?: Y [ ] N [X] WO# _____ **MCR Required?:** Y [ ] N [X] MCR# _____

System Engineer/WGS Closure Review is Accomplished by Electronic Signature

DIVIDER

PAGE

AMWTP
Advanced Mixed Waste Treatment Project

NON-CONFORMANCE REPORT

WIPP Data - AK

NCR #: 88128

Title: AK Characterization	
Originator: Hinkle-Daniel, Caralea	**Date Opened:** 08/19/14
Responsible Dept: Waste Programs	**Batch #:** RTR11-00239
Container ID: 10349220	**Tag Applied:** No
Characterization Problem: Inappropriate WMC Assignment	
Originator Sign By: Caralea Hinkle-Daniel	**Originator Sign Date:** 08/19/14

Production Comments: **Approved Remediation:** **AK Evaluation Required**

This container was assigned an IDC of UN-00B. During RTR the container IDC was also assigned as UN-00B, however UN-00B no longer applies to this container. SD-177 was created to replace UN-00B for debris generated as a result of INL SDA exhumations including debris exhumed, generated and/or repackaged during the EWR Project and the IDR Project. To ensure the associated issue is resolved prior to disposition of this waste, IDC change is necessary. For closure of this NCR the IDC must be changed to SD-177. The RTR data associated with this container has been validated and to facilitate this IDC change an RVU will be required. CHD 08/20/14

RVU was generated and is complete. DJM. 8/21/14.

Performed By: David Marquardt	**Performed Date:** 08/21/14

Waste Programs Evaluation/Verification:

SPM Verification Statement: container has had a RVU created to change the IDC from UN-00B to SD-177. SPM has verified the data in WTS and the analysis has been approved at the SPM level. Recommend closure of NCR. DJM. 8/21/14.

SPM Verification Complete By: David Marquardt	**SPM Verification Complete Date:** 08/21/14
MLLW/LLW Verification Complete By:	**MLLW/LLW Verification Complete Date:**

QA Closure Comments:

QA Closure Comment: Verified in WTS that an RVU has been completed for container 10349220 and that WTS now shows container 10349220 as having an IDC of SD-177 as required. No further action is required of this NCR. C. Robison 08-21-14

QA Add'l Action Reqd By:	**QA Add'l Action Reqd Date:**
QA Verification Complete By: Camille Robison	**QA Verification Comp Date:** 08/21/14

Information Only

DIVIDER

PAGE

AMWTP
Advanced Mixed Waste Treatment Project

NONCONFORMANCE REPORT

NCR No.: 88321

PARENT:

Title: BR90 # 10510566 does not meet current waste profile revision.

Category: Other	**Affected Item Type:** Container ID
Affected Item: 10510566	
Originator: Jones, Bart	**Date Opened:** 08/27/14
Source Type: As Found Condition	**ORPS Reportable:**
Source Type Doc. No.	
ORPS No.:	**ORPS Category:**
Finding #:	
Requirement Violated: DOE/NV-325 NNSS WAC	
Shipment No.	**Payload No.**
Equipment ID:	**PO Number:**
Batch No.	
Container ID: 10510566	
Tag Applied: Yes	**No. of Tags:** 1

Information Only

Description of Condition:

BR90 # 10510566 does not meet current waste profile revision, for DOE/NV-325 NNSS WAC.

Recommend cancellation of this NCR as the waste profile has been revised and container now meets the waste profile. Revised profile and approval letter is contained in the supporting documentation file. 09/16/14, Paul Minor WCO
QA comment: Verified the waste profile has been revised by AMWTP (Am-241 concentration is now 2.22E+01) and approved by the NNSA/NFO. This container was determined to meet the requirements of the revised profile. Agree with the recommendation and justification for cancelling this NCR. LR091614

Manager Review By: Shannon FloresTrackwise Adminstrator	**Manager Review Date:** 09/02/1409/16/14
QA Closed-Cancelled By: Lyle Ryman	**QA Closed-Cancelled Date:** 09/16/14

Note: QA Closed-Cancelled Signature is based on concurrence between Responsible Manager and Quality Assurance

Is Valid:	**WIPP Submittal Req'd?**
Stop Work Order:	**Is CAR Req'd?**
HSS-OE Applicable:	**NTS Report Number:**
HSS-OE Reportable:	**NTS Report Date:**

HSS-OE Regulations

10 CFR 820:	**10 CFR 830 Subpart A:**
10 CFR 830 Subpart B:	**10 CFR 835 Rad Protection:**
10 CFR 851Safety/Health:	**Quality (Type Material):**
	Responsible Department:
	Functional Area:
	Disposition Due Date:
QA Mgr Rev Sign By:	**QA Mgr Rev Sign Date:**

AMWTP
Advanced Mixed Waste Treatment Project

NONCONFORMANCE REPORT

NCR No.: 88321

PARENT:

	Date Due:
Disposition:	Responsible Manager:
	Assigned Actionee:
Conditional Use:	Conditional Use Expiration Date:
USQ Screen Req'd?	USQ Screen No.:
Root Cause Analysis:	
Level A Cause Code:	Contributing Cause Level A:
Level B Cause Code:	Contributing Cause Level B:
Level C Cause Code:	Contributing Cause Level C:
Disposition Description:	
Mgr Disp App By:	Mgr Disp App Date:
QA Add'l Disp. Req'd By:	QA Add'l Disp. Req'd Date:
Mgr Add'l. Disp App By:	Mgr Add'l. Disp App Date:
QA Mgr Rev Disp Sign By:	QA Mgr Rev Disp Sign Date:
CAP Complete Comments:	
Action Complete By:	Action Complete Date:
QA Add'l Action Req'd By:	QA Add'l Action Req'd Date:
Add'l Action Complete By:	Add'l Action Complete Date:
QA Verification Complete By:	QA Verification Comp Date:

Waste Characterization Case File:

CH Container Packages:

Container; 10295803 (an 85-gallon overpack container packed with super-compacted waste)

Container; 10018127 (an 85-gallon overpack container)

Container; BN 10493493 (a standard waste box (SWB) directly loaded container) CC 10/20/14

Container; BN 10514268 (a 100-gallon overpack container) CC 10/20/14

Container; 10367054 (a 55-gallon container that will be placed in an overpack) CC 10/20/14

Container; BN10528597 (a 100-gallon overpack container)

QA Container Open NCR Quick Search
as of September 22, 2014

NCR#	Cntr ID	Open Date	Type	Issue	Disposition / Remediation	Resp Mgr	Status
none	10295803	**No Records**					

INFORMATION ONL

Waste Isolation Pilot Plant
Container Data Report

Report Statistics

Report Version:	**2.3**
WDS Instance:	**prd05.wipp.carlsbad.nm.us**
Generated on:	**December 02, 2013 04:24 PM**
Generated by:	**STORMS, MATTHEW**
Total Pages:	**7**

Selection Criteria

Container Number: **10295803**

Container: 10295803
Type: 28 - 85 gal Tall TBO

Current Status

Extended Status: APPROVED CHARZ
Container Status: CHARACTERIZATION DATA APPROVED
Certification Date:

Waste Handling Code: CH
Disposal Date:

Current Location Site: IN
Generator Site: BN
Destination Site ID: WI

Certification Program ID: BN
Shipping Program ID: BN

Neutron Dose Rate (mrem/hr): 1.0
Beta Gamma Dose Rate (mrem/hr): 0.4
Total Dose Rate (mrem/hr): 1.4

FGE (g): 0.0E00
FGE Uncertainty (g): 0.0E00

Gross Weight (kg): 91.02
Gross Weight Uncert (kg): 0.60

Decay Heat (W): 0.0E00
Decay Heat Uncertainty (W): 0.0E00

Certification Data Values

Waste Stream Profile Code: BN510.3
Waste Type Code: MTRU
IDC Code: 177
Waste Matrix Code: S5490
WAC Revision Number: 7.4
Fill Factor (%): 95.00
Waste Stream BIR ID: IN-BN510.3
Waste Stream MWIR ID: IN-BN510.3

TRU Alpha Activity (Ci): 0.0E00
TRU Alpha Activity Uncertainty (Ci): 0.0E00
TRU Alpha Activity Concentration (Ci/g): 0.0E00
PU-239 Equivalent Activity (PE-Ci): 0.0E00
Alpha Surface Contamination (dpm/cm^2): 19.0
Beta/Gamma Surface Contamination (dpm/cm^2): 199.0

Transportation Data Values

Closure Date:
Vent Date:
Process Knowledge? N

TRUCON Code: ID121CD
Shipping Category:
Aspiration Method:

Shipment Purpose: DISPOSAL
Machine Compacted? N
Liner Exists? N
Liner Hole Size(mm):
Liner Lid Present?
Layers of Packaging 2
Aqueous Material? N

Gas Generation Data Values

Measured FGGR (mol/s)	Measured TGRR (mol/s)	Truncated FGGR Test (Y/N)	Truncated FGGR Test Period (days)

Filters

Filter Model Number	Filter Diffusivity (mol/s/ml)	Quantity	Install Date

Container: 10295803
Type: 28 - 85 gal Tall TBO

Current Status

Extended Status: APPROVED CHARZ
Container Status: CHARACTERIZATION DATA APPROVED
Certification Date:
Waste Handling Code: CH
Disposal Date:

PCB Waste? N
PCB Mass (kg):
PCB Concentration (ppm):
PCB Out of Service Date:
Be Present? N
Be <= 1% by weight? Y
Be mass <= 100kg? Y
Separation OK?
Packing Fraction (compaction level): non-compacted

Certification Comments

Radionuclides

Radionuclide	Activity (Ci)	Activity Uncert (Ci)	Mass (g)	Mass Uncert (g)
AM-241	<LLD	<LLD	<LLD	<LLD
CS-137	<LLD	<LLD	<LLD	<LLD
NP-237	<LLD	<LLD	<LLD	<LLD
PU-238	<LLD	<LLD	<LLD	<LLD
PU-239	<LLD	<LLD	<LLD	<LLD
PU-240	<LLD	<LLD	<LLD	<LLD
PU-241	<LLD	<LLD	<LLD	<LLD
PU-242	<LLD	<LLD	<LLD	<LLD
SR-90	<LLD	<LLD	<LLD	<LLD
U-233	<LLD	<LLD	<LLD	<LLD
U-234	<LLD	<LLD	<LLD	<LLD
U-235	<LLD	<LLD	<LLD	<LLD

Container: 10295803
Type: 28 - 85 gal Tall TBO

Current Status
Extended Status: APPROVED CHARZ
Container Status: CHARACTERIZATION DATA APPROVED
Certification Date:
Waste Handling Code: CH
Disposal Date:

Radionuclides

Radionuclide	Activity (Ci)	Activity Uncert (Ci)	Mass (g)	Mass Uncert (g)
U-238	<LLD	<LLD	<LLD	<LLD

Material Parameters

Material Parameter	Description	Weight (kg)
1	IRON BASE METAL ALLOYS	0.45
3	OTHER METAL/ALLOYS	2.27
6	CELLULOSICS	0.91
8	PLASTICS	22.52
13	STEEL CONTAINER MATERIALS	64.41
14	PLASTIC/LINERS CONTAINER MATERIALS	0.45
	Waste Weight:	26.15
	Packaging Weight:	64.86
	Total Material Weight:	91.01

Hazardous Codes

Hazardous Code	Description
D004	ARSENIC
D005	BARIUM
D006	CADMIUM
D007	CHROMIUM
D008	LEAD
D009	MERCURY

Container: 10295803
Type: 28 - 85 gal Tall TBO

Extended Status: APPROVED CHARZ
Container Status: CHARACTERIZATION DATA APPROVED
Certification Date:
Waste Handling Code: CH
Disposal Date:

Hazardous Codes

Hazardous Code	Description
D010	SELENIUM
D011	SILVER
D022	CHLOROFORM
D027	1,4-DICHLOROBENZENE
D028	1,2-DICHLOROETHANE
D029	1,1-DICHLOROETHYLENE
D030	2,4-DINITROTOLUENE
D032	HEXACHLOROBENZENE
D033	HEXACHLOROBUTADIENE
D034	HEXACHLOROETHANE
D037	PENTACHLOROPHENOL
D043	VINYL CHLORIDE
F001	SPENT HALOGENATED SOLVENTS
F002	SPENT HALOGENATED SOLVENTS
F004	SPENT NONHALOGENATED SOLVENTS
F005	SPENT NON-HALOGENATED SOLVENTS
F006	WASTEWATER TREATMENT SLUDGE
F007	SPENT CYANIDE PLATING BATH
F009	SPENT STRIPPING SOLUTION

Assay Methods

Container: 10295803
Type: 28 - 85 gal Tall TBO

Current Status
Extended Status: APPROVED CHARZ
Container Status: CHARACTERIZATION DATA APPROVED
Certification Date:
Waste Handling Code: CH
Disposal Date:

Assay Methods

Labor Code	Assay Method	Description	Assay Date
BN	9DA2	Z-211-103: CANBERRA DRUM ASSAY	10/02/2011

Non-Destructive Examination (NDE)

Labor Code	NDE Method	Description	Examination Date
BN	9RR1	RTR SYSTEM (Z-213-101)	12/11/2011

Edit Limit Check Results
Evaluation Date: 10/24/2013 15:10:55 Overall Status: PASS

Evaluation Code	Status	Return Code	Detailed Description
DI_CHARZ_ALL	PASS		
DI_CHARZ_CHARZ	PASS		
DI_CHARZ_ED	PASS		
WAP_CHARZ	PASS		

TRAMPAC Evaluation Results
Evaluation Date: Overall Status:

Evaluation Code	Status	Return Code	Detailed Description

History

Event Date/Time	Event Description	Reason
10/23/2013 15:52:14	INSERT DATA INTO THE DATABASE	

Container: 10295803
Type: 28 - 85 gal Tall TBO

Current Status

Extended Status: APPROVED CHARZ
Container Status: CHARACTERIZATION DATA APPROVED
Certification Date:

Waste Handling Code: CH
Disposal Date:

History

Event Date/Time	Event Description	Reason
10/24/2013 15:10:56	SUCCESSFUL SUBMISSION FOR CHARZ	
12/02/2013 06:50:27	APPROVED FOR CHARZ	

AMWTP Advanced Mixed Waste Treatment Project	**Container Data Approval**	Form-1936 Rev. 0 Effective: 12/10/09 Page 1 of 1

Implementing Document: MP-TRUW-8.5

Container ID: 10295803

Purpose of Review: Waste Stream Profile BN510.3 Characterization Data

Container Data Entry Review

I hereby attest that I have reviewed the data for this waste container and, based on the comparison with the quality record, I can say to the best of my knowledge that the information prepared for submittal is true, accurate, and complete.

Reviewing Official

Name	Signature	Date
Bonnie McCurdy	Bonnie McCurdy	10/24/13

Container Data Approval

I hereby attest that I have reviewed the data for this waste container and, based on the comparison with the quality record, I can say to the best of my knowledge that the information prepared for submittal is true, accurate, and complete.

Approval Official

Name	Signature	Date
Nancy Kirk	Nancy Kirk	10/24/13

AMWTP
Advanced Mixed Waste Treatment Project

WDS Certification Data Entry Form

Container ID: 10295803 **WIPP Label:** 10295803

DATA DESCRIPTION	WDS ENTRY
Shipper Site ID	BN
Waste Stream Profile	BN510.3
TRUPACT Container Type	28
WAC Revision Number	7.4
Certification Site ID	BN
Waste Handling Code	CH
Waste Stream BIR	IN-BN510.3
MWIR	IN-BN510.3
Generator Site ID	SD
IDC	177
Waste Matrix Code	S5490
TRUCON Code	ID121CD
TRU Alpha Activity (Ci)	.00E+00
TRU Alpha Activity Error (Ci)	.00E+00
TRU Alpha Activity Concentration (nCi/g)	.000
TRU Alpha Activity Concentration Error (nCi/g)	.000
Pu239 Fissile Gram Equivalent (FGE)	.00E+00
Pu239 Fissile Gram Equivalent Error (FGE)	.00E+00
Pu239 Equivalent Activity (PE-Ci)	.00E+00
Decay Heat (W)	.00E+00
Decay Heat Error (W)	.00E+00
Layers of Packaging	2
Fill Factor (%)	95
Liner Exists	N
Liner Hole Diameter (mm)	NA
Liner Lid Present	NA
Process Knowledge Exists	N
PCB Concentration (ppm)	NA
PCB Waste	N
PCB Out of Service Date	N/A
PCB Mass	NA
Total Gas Generation Rate (mol/s)	N/A
Hydrogen/Methane Generation Rate (mol/s)	N/A
Gas Generation Test Completion Date	N/A
Gross Weight (kg)	91.02
Gross Weight Error (kg)	.60
Alpha Surface Contamination (dpm/100 cm2)	19
Beta Gamma Surface Contamination (dpm/100cm2)	199
Neutron Dose Rate (mrem/hr)	1.00
Beta Gamma Dose Rate (mrem/hr)	.40
Aqueous Material	N
Machine Compacted	N
1/2" Separation Criteria Met for Compacted Waste	NA

Beryllium Mass <= 100 kg	NA	Beryllium <= 1% by Weight	NA
		Beryllium Present	N

AMWTP
Advanced Mixed Waste Treatment Project

WDS Certification Data Entry Form

Container ID: 10295803 **WIPP Label:** 10295803

RADIONUCLIDES INFORMATION

Radionuclide	Activity (Ci)	Activity Error (Ci)	Mass (g)	Mass Error (g)
PU-238	.000E+00	.000E+00	.000E+00	.000E+00
PU-239	.000E+00	.000E+00	.000E+00	.000E+00
PU-240	.000E+00	.000E+00	.000E+00	.000E+00
PU-241	.000E+00	.000E+00	.000E+00	.000E+00
PU-242	.000E+00	.000E+00	.000E+00	.000E+00
AM-241	.000E+00	.000E+00	.000E+00	.000E+00
NP-237	.000E+00	.000E+00	.000E+00	.000E+00
U-235	.000E+00	.000E+00	.000E+00	.000E+00
CS-137	.000E+00	.000E+00	.000E+00	.000E+00
U-233	.000E+00	.000E+00	.000E+00	.000E+00
U-238	.000E+00	.000E+00	.000E+00	.000E+00
U-234	.000E+00	.000E+00	.000E+00	.000E+00
SR-90	.000E+00	.000E+00	.000E+00	.000E+00

WASTE MATERIAL PARAMETERS

Waste Material Parameter	Description	Material Weight (Kg)
1	Iron-based Metals/Alloys	.45
2	Aluminum-based Metals/Alloys	.00
3	Other metals	2.27
4	Other Inorganic Materials	.00
5	(EXPIRED)	.00
6	Cellulosics	.91
7	Rubber	.00
8	Plastic (Waste Materials)	22.52
9	Inorganic matrix	.00
10	Organic matrix	.00
11	(EXPIRED)	.00
12	Soils/gravel	.00
13	Steel (packaging materials)	64.41
14	Plastic (packaging materials)	.45
15	Cellulosics Packaging	.00
	Total:	91.01

AMWTP Advanced Mixed Waste Treatment Project

WDS Certification Data Entry Form

Container ID: 10295803 **WIPP Label:** 10295803

ASSAY METHODS

Assay Method	Assay Method Date
9DA2	02-OCT-2011

CHARACTERIZATION METHODS

Characterization Method	Characterization Method Date
9RR1	11-DEC-2011

HAZARDOUS CODES

Hazardous Code(s)								
	D004	D005	D006	D007	D008	D009	D010	D011
	D022	D027	D028	D029	D030	D032	D033	D034
	D037	D043	F001	F002	F004	F005	F006	F007
	F009							

COMMENTS

Comment Type	WIPP Comment
N/A	N/A

ADDITIONAL CERTIFICATION DATA (not Submitted to WDS)

Requirement	Acceptance Criterion	Compliance
Payload Container meets 7A, Type A requirements based on manufacturers specifications.	Payload Container Weight <= the Manufacturers DOT 7A Certified Weight Limit	Y
Unique Container ID, Radioactive and/or Hazard labels	Container Identification/Labeling	Y
Prohibited Liquids	Prohibited	Y
Sealed Containers	No sealed containers > 4 L	Y
Chemical Compatibility	Chemicals allowed by the TRAMPAC	Y
Residual Liquids containing Polychlorinated Biphenyl	Prohibited	Y
Nonradionuclide Pyrophorics	Prohibited	Y
Explosives, Corrosives and Compressed Gases	Prohibited	Y
Non Mixed Hazardous Waste	Prohibited	Y
Sharp/Heavy items blocked or braced	Necessary to provide puncture protection for payload containers	Y
Confinement Layers	Bags closured by approved methods	Y
RCRA Data	Waste Stream Profile Form Approval Date	

AMWTP
Advanced Mixed Waste Treatment Project

WDS Certification Data Entry Form

Container ID: 10295803 **WIPP Label:** 10295803

Container Review Statement

I have reviewed the data for this waste container and it is complete and accurate to the best of my knowledge.

Completed By: _____ 10-23-2013
Signature Date

Container Certification Statement and WDS Data Submittal

I hereby certify that I have reviewed the data for this waste container and that it is complete and accurate to the best of my knowledge. I have determined that it meets the requirements stated in the current revision of the CH-WAC. I understand that this information will be made available to regulatory agencies and that there are significant penalties for submitting false information, including the possibility of fines and imprisonment for knowing violations.

Printed Name Waste Certification Official	Signature	Date

AMWTP Advanced Mixed Waste Treatment Project	**Waste Stream Profile Form**	**Form-1195** **Rev. 5** **Effective: 03/02/11** **Page 1 of 3**

Implementing Document: MP-TRUW-8.14

Waste Stream Profile Number: BN510.3

Generator site name: Advanced Mixed Waste Treatment Project
Technical contact: Eric Schweinsberg

Generator site EPA ID: ID4890008952
Technical contact phone number: (208)557-6425

Date(s) of audit report approval by NMED: 4/29/05 (Revised 5/3/05), 6/16/06, 1/18/08, 1/9/09, 1/8/10, 1/25/11, 5/1/12, 9/10/13

Title, version number, and date of documents used for WAP certification:
Certification Plan for INL Transuranic Waste, MP-TRUW-8.1, Rev. 24, June 10, 2013.
Quality Assurance Project Plan, MP-TRUW-8.2, Rev. 17, June 11, 2013
CCP Transuranic Authorized Methods For Payload Control (CCP CH-TRAMPAC), CCP-PO-003, Rev. 13, 7/31/2013

Did your facility generate this waste? ☒ Yes ☐ No If no, provide the name and EPA ID of the original generator:

Waste Stream Information

WIPP ID: IN-BN510.3[3]
Summary Category Group: S5000

Waste Matrix Code Group: Heterogeneous Debris Waste
Waste Stream Name: Supercompacted Debris Waste

Description from the ATWIR: BN510.3 is a newly generated debris waste stream generated from supercompacted 55-gallon containers of debris waste.[3]

Defense TRU Waste: ☒ Yes ☐ No
Check One: ☒ CH ☐ RH

Number of SWBs: 92
Number of Drums: 9,000 100 gallon drums
Number of Canisters: 0

Batch Data report numbers supporting this waste stream characterization: See Characterization Summary Report

List applicable EPA Hazardous Waste Numbers:[2]: D004, D005, D006, D007, D008, D009, D010, D011, D022, D027, D028, D029, D030, D032, D033, D034, D037, D043, F001, F002, F004, F005, F006, F007, and F009

Applicable TRUCON Content Codes: ID121

Acceptable Knowledge Information [1]

(For the following, enter the supporting documentation used [i.e., references and dates])

Required Program Information

Map of site: Reference Nos.2 and 3
Facility mission description: Reference No.11
Description of operations that generate waste: References Nos.1 and 3

Waste identification/categorization schemes: Reference Nos.1, 3, 4, 5 and 6
Types and quantities of waste generated: Reference No. 1
Correlation of waste streams generated from the same building and process, as appropriate: Reference Nos. 1 and 3

Waste certification procedures: Reference Nos.7 and 21

Required Waste Stream Information

Area(s) and building(s) from which the waste stream was generated: Reference Nos. 1 and 3
Waste stream volume and time period of generation: Reference No. 1
Waste generating process description for each building: Reference Nos.1 and 3
Documentation regarding how site has historically managed the waste: Reference No. 1 and 3
Process flow diagrams: Reference Nos. 1 and 3

Material inputs or other information identifying chemical/radionuclide content and physical waste form: Ref. Nos. 1, 3, 4, 5, 6, 16, 17, 18, 19, 20, 22, and 24
Waste Material Parameter Weight Estimates per unit of waste: Reference No. 1

Which Defense Activity generated the waste: (check one)

- ☒ Weapons activities including defense inertial confinement fusion (4)
- ☐ Verification and control technology
- ☐ Defense nuclear waste and material by products management
- ☐ Defense nuclear waste and materials security and safeguards and security investigations
- ☐ Naval Reactors development
- ☐ Defense research and development
- ☐ Defense nuclear material production

Additional Acceptable Knowledge Documentation

Process design documents:	N/A
Standard operating procedures:	Reference Nos. 1, 3, 13, and 25
Safety Analysis Reports:	Reference No. 14
Waste packaging records:	N/A
Test plans/research project reports:	N/A
Site databases:	Reference No 15
Information from site personnel:	N/A
Standard industry documents:	N/A
Analytical data relevant to the waste stream:	N/A
Material safety data sheets:	Reference Nos. 1, 16, 17, 18, 19, 20, 22, and 24
Sampling and analysis data from comparable/surrogate waste streams:	N/A
Laboratory notebooks:	N/A

Characterization Information (2)

For the following, when applicable, enter procedure title(s), number(s) and date(s)

Radiography:	Reference Nos: 8 and 23
Visual Examination:	Reference Nos. 9 and 10

Waste Stream Profile Form Certification:

I hereby certify that I have reviewed the information in this Waste Stream Profile Form, and it is complete and accurate to the best of my knowledge. I understand that this information will be made available to regulatory agencies and that there are significant penalties for submitting false information, including the possibility of fines and imprisonment for knowing violations.

Eric Schweinsberg — Signature of Site Project Manager

Eric Schweinsberg — Printed Name

November 18th, 2013 — Date

NOTE: (1) Use back of sheet or continuation sheets, if required.

(2) If radiography, visual examination were used to determine EPA Hazardous Waste Codes, attach a signed Characterization Information Summary documenting this determination.

(3) This waste stream is currently not identified in the ATWIR. The ATWIR will be updated at the time of the next data call to include the following: BN510.3 waste stream is a newly generated debris waste stream generated from supercompacted 55-gallon containers of debris waste.

(4) The debris waste identified as feedstock to the AMWTP Supercompactor originated from various defense-related sources that include: verification and control technology, weapons activities including defense inertial confinement fusion, defense nuclear waste and material by products management, defense nuclear waste and materials security and safeguards and security investigations, Naval reactors development, defense research and development and defense nuclear material production. Currently the largest contributing debris feedstock is associated with debris wastes generated from defense-related weapons activities associated with one or more of eight U.S. Department of Energy (DOE) sites.

Reference List:

1. RPT-TRUW-83, Acceptable Knowledge Summary for Supercompacted Debris Waste, Rev. 6, September 10, 2013
2. DWG-5232-52-0101, Site Plan of the Advanced Mixed Waste Treatment Facility, Rev. 0, April 1999
3. RPT -TRUW-06, Acceptable Knowledge Document for AMWTP Waste, Rev. 15, October 23, 2013
4. RPT-TRUW-12, AMWTP Waste Stream Designations, Rev. 21, October 7, 2013
5. RPT-TRUW-05, Waste Matrix Code Reference Manual, Rev. 33, October 31, 2013
6. RPT-TRUW-07, Determination of Radioisotopic Content in TRU Waste Based on Acceptable Knowledge, Rev. 19, November 5, 2013
7. MP·TRUW-8.5, TRU Waste Certification, Rev. 29, June 11, 2013
8. INST-OI-12, Real-Time Radiography Examinations (Certification Scans), Rev. 52, August 13, 2013
9. INST-OI-34, Non-Facility Visual Examination Operations, Rev. 28, September 3, 2013
10. INST-FOI-17, Facility Visual Examination Operations, Rev. 27, September 3, 2013
11. RPT-PEP-01, Project Execution Plan, Rev 6, October 03, 2012
12. MP-TRUW-8.2, Quality Assurance Project Plan, Rev. 17, June 11, 2013
13. INST-FOI-20, Supercompactor and Post-Compaction Operations, Rev. 40, September 30, 2013
14. RPT-DSA-02, Documented Safety Analysis, Rev. 9, August 23, 2012
15. BBWI-Generated Drum Data, including Data from the Transuranic Waste Management Information System (TWMIS)
16. RPT-TRUW-30, Acceptable Knowledge Summary for Supercompacted Debris Waste (BN510), Rev. 7, July 02, 2012
17. RPT-TRUW-56, Acceptable Knowledge Document for INL Stored Transuranic Waste-Rocky Flats Plant, Rev. 5, May 09, 2012
18. RPT-TRUW-04, Acceptable Knowledge Document for the Battelle Columbus Laboratories, Building JN-4 Plutonium Laboratory, Rev. 6, June 25, 2012
19. RPT-TRUW-13, Acceptable Knowledge Document for INL Stored Transuranic Waste-Mound Plant Waste, Rev. 7, July 05, 2012
20. RPT-TRUW-79, Acceptable Knowledge Document for Materials and Fuels Complex Waste, Rev 3, September 30, 2013
21. MP-TRUW-8.1, Certification Plan for INL Transuranic Waste, Rev. 24, June 10, 2013
22. RPT-TRUW-89, Acceptable Knowledge Baseline for Argonne National Laboratory-East Waste, Rev 1, March 20, 2013
23. INST-OI-14, Drum Assay Operations, Rev 34, October 28, 2012
24. RPT-TRUW-91, Acceptable Knowledge Document for Pre-1980 INL-Exhumed SDA Waste, Rev. 1, August 1, 2013
25. MP-TRUW-8.13, Collection, Review, and Management of Acceptable Knowledge Documentation, Rev. 25, August 13, 2013.

I certify by signature below that data of sufficient type, quality, and quantity are collected to meet WAP DQOs.

WSPF No.: BN510.3

Data Quality Objective	Yes	No	N/A	Comment
1. Have all containers in the lot been assigned the correct Waste Matrix Code?	☒	☐	☐	
2. Have waste material parameter weights been established for each container in the lot?	☒	☐	☐	
3. Does each waste container of waste contain transuranic (TRU) radioactive waste?	☒	☐	☐	
4. Does the waste stream exhibit a toxicity characteristic (TC) under 40 CFR Part 261, Subpart C?	☒	☐	☐	
5. Does the waste stream contain listed waste found in 20.4.1.200 NMAC incorporating 40 CFR, Part 261, Subpart D?	☒	☐	☐	
6. Can the waste stream be classified as hazardous or nonhazardous?	☒	☐	☐	The waste is classified as a mixed waste.
7. Have the overall completeness, comparability, and representativeness quality assurance objectives (QAOs) been met for each of the testing procedures as specified in MP-TRUW-8.2, Sections C3-2 and C3-3, for the lot?	☒	☐	☐	
8. Was an Open nonconformance report (NCR) search performed for all containers/pucks/source containers on the final list for the waste stream profile/reconciliation lot?	☒	☐	☐	

WSPF No.: BN510.3

Data Quality Objective	Yes	No	N/A	Comment
9. Was an Open NCR search performed for all batches in the final list for the waste stream profile/reconciliation lot?	☒	☐	☐	
10. Were all batches identified in the waste stream profile form (WSPF) or reconciliation lot complete through site project manager (SPM) signature release? List any batches identified as not complete through validation.	☒	☐	☐	
11. Were any open NCRs found that are applicable to the waste stream profile/reconciliation lot? List NCR, container, and batch.	☐	☒	☐	
12. Is there an approved AK Sufficiency Determination for this waste stream?	☐	☒	☐	The AMWTP has not sought an AK sufficiency determination for this waste stream.

Site Project Manager: Eric Schweinsberg (Printed name) Eric Schweinsberg (Signature) Nov. 18th 2013 (Date)

2nd Site Project Manager: George Byram (Printed name) George Byram (Signature) 11/18/13 (Date)

WSPF Number: BN510.3 **Lot Number:** 1

Characterization Information Summary Introduction

Advanced Mixed Waste Treatment Project (AMWTP) has compiled Acceptable Knowledge (AK) information for waste stream BN510.3 Supercompacted Debris Waste as required by MP-TRUW-8.1, Certification Plan for INL Transuranic waste and MP-TRUW-8.2, Quality Assurance Project Plan, (QAPjP). In addition, AMWTP has conducted characterization using Acceptable Knowledge (AK), Real Time Radiography (RTR)/Visual Examination (VE) and Non-Destructive Radioassay (NDA/RA).

Justification for Selection of RTR and/or VE as an appropriate method for characterizing the waste

The box line waste is characterized using VE and the direct feed waste is characterized by RTR or VE. VE is the appropriate method for characterizing box line waste because it can be accomplished and recorded per the QAPjP (MP-TRUW-8.2) during sorting, size reduction, and repackaging into 55 gallon drums. Radiography is the appropriate method for the direct feed line because it can be readily accomplished per the QAPjP (MP-TRUW-8.2) on direct feed drums. Where dense or otherwise impenetrable objects and/or lead shielding that may create a condition or configuration where examination using radiography will not yield acceptable DQOs, only VE is appropriate. The selected containers in the initial lot have undergone the appropriate RTR/VE and NDA characterization techniques in addition to characterization by AK. The physical form was confirmed to match the AK physical form description for the applicable IDC prior to compaction and all containers have been assigned to the correct waste matrix code.

Table 1 presents the correlation of Container Identification Numbers to Data Packages. Table 2 presents the RTR/VE summary of prohibited items for each container in the lot.

The Site Project Manager (SPM) signature certifies that through AK, testing and/or analysis that the waste included in this waste stream is not corrosive, ignitable, reactive, or incompatible with the WIPP Treatment, Storage, and Disposal Facility (TSDF) and does not contain prohibited items (See RPT-TRUW-83 for more information).

HWNs are assigned based on AK. The HWN assignment for this waste stream includes:

- Toxicity characteristic metals – D004 through D011
- Toxicity characteristic organics – D022, D027, D028, D029, D030, D032, D033, D034, D037 and D043
- F-Listed HWNs include: F001, F002, F004, F005, F006, F007 and F009.

SPM

Printed Name: Eric Schweinsberg Signature: Eric Schweinsberg Date: November 18th 2013

2nd SPM

Printed Name: George Byram Signature: George Byram Date: 11/18/13

SPM signature indicates that the information presented in this package is consistent with batch data reports and indicates concurrence with all information presented in this report.

SPF Number: BN510.3 Lot Number: 1

Characterization Information Summary

Characterization Description:

Containers listed below were characterized by RTR (INST-OI-12, Real-Time Radiography Examinations [Certification Scans]) and NDA (INST-OI- 14, Drum Assay Operations).

Table 1. Correlation of Container Identification Numbers to Data Package.

Container No.	RTR Data Package	RA Data Package	VE Data Package
10295803	RTR11-00419	ASY11-02566	N/A
10309125	RTR11-00371	ASY11-02567	N/A
10314331	RTR11-00426	ASY11-02580	N/A
10316836	RTR11-00267	ASY11-01600	N/A
10343019	RTR11-00428	ASY12-01931	N/A
10314966	RTR13-00001	ASY13-00023	N/A
10320665	RTR11-00265	ASY11-01599	N/A
10322386	RTR11-00265	ASY11-01584	N/A
10344289	RTR11-00289	ASY11-01764	N/A
10306575	RTR12-00170	ASY12-04138	N/A

PF Number: BN510.3 Lot Number: 1

Table 2. RTR/VE Summary of Prohibited Items.

Container No.	RTR Prohibited Items	VE Prohibited Items
10295803	None	None
10309125	None	None
10314331	None	None
10316836	None	None
10343019	None	None
10314966	None	None
10320665	None	None
10322386	None	None
10344289	None	None
10306575	None	None

DIVIDER

PAGE

QA Container Open & Closed NCR Quick Search
as of September 23, 2014

NCR#	Cntr ID	Open Date	Type	Issue	Disposition / Remediation	Resp Mgr	Status
none	10018127	**No Records**					

INFORMATION ONLY

Waste Isolation Pilot Plant
Container Data Report

RECORD
10018127
B-2014-0129
SMCCURDY
03/13/2014

Report Statistics

Report Version:	**2.3**
WDS Instance:	**prd05.wipp.carlsbad.nm.us**
Generated on:	**March 13, 2014 07:34 AM**
Generated by:	**MCCURDY, STORMIE**
Total Pages:	**8**

Selection Criteria

Container Number: **10018127**

Container: 10018127
Type: 28 - 85 gal Tall TBO

Current Status

Extended Status: APPROVED CERT
Container Status: CERTIFICATION DATA APPROVED
Certification Date: 03/06/2014
Waste Handling Code: CH
Disposal Date:

Current Location Site: IN
Generator Site: RF
Destination Site ID: WI

Certification Program ID: BN
Shipping Program ID: BN

Neutron Dose Rate (mrem/hr): 0.5
Beta Gamma Dose Rate (mrem/hr): 2.0
Total Dose Rate (mrem/hr): 2.5

FGE (g): 3.585E01
FGE Uncertainty (g): 9.427E00

Gross Weight (kg): 292.05
Gross Weight Uncert (kg): 0.60

Decay Heat (W): 1.279E-01
Decay Heat Uncertainty (W): 2.164E-02

Certification Data Values

Waste Stream Profile Code: BN004
Waste Type Code: MTRU
IDC Code: 004
Waste Matrix Code: S3150
WAC Revision Number: 7.4
Fill Factor (%): 85.00
Waste Stream BIR ID: IN-BN004
Waste Stream MWIR ID: IN-BN004

TRU Alpha Activity (Ci): 4.064E00
TRU Alpha Activity Uncertainty (Ci): 6.931E-01
TRU Alpha Activity Concentration (Ci/g): 1.863E-05
PU-239 Equivalent Activity (PE-Ci): 4.102E00
Alpha Surface Contamination (dpm/cm^2): 19.0
Beta/Gamma Surface Contamination (dpm/cm^2): 199.0

Transportation Data Values

Closure Date: 11/23/2012
Vent Date: 11/23/2012
Process Knowledge? N

TRUCON Code: ID211AF
Shipping Category: 1001600133
Aspiration Method: N

Shipment Purpose: DISPOSAL
Machine Compacted? N
Liner Exists? Y
Liner Hole Size(mm): 7.62
Liner Lid Present? Y
Layers of Packaging: 2
Aqueous Material? Y

Gas Generation Data Values

Measured FGGR (mol/s)	Measured TGRR (mol/s)	Truncated FGGR Test (Y/N)	Truncated FGGR Test Period (days)

Filters

Filter Model Number	Filter Diffusivity (mol/s/ml)	Quantity	Install Date
NF013	3.7E-06	1	11/23/2012
NF036C	1.9E-06	2	11/23/2012

Container: 10018127
Type: 28 - 85 gal Tall TBO

Current Status

Extended Status: APPROVED CERT
Container Status: CERTIFICATION DATA APPROVED
Certification Date: 03/06/2014
Waste Handling Code: CH
Disposal Date:

PCB Waste? N
PCB Mass (kg):
PCB Concentration (ppm):
PCB Out of Service Date:
Be Present? N
Be <= 1% by weight?
Be mass <= 100kg?
Separation OK?
Packing Fraction (compaction level): non-compacted

Certification Comments

Radionuclides

Radionuclide	Activity (Ci)	Activity Uncert (Ci)	Mass (g)	Mass Uncert (g)
AM-241	1.260E00	3.364E-01	3.630E-01	9.692E-02
CS-137	<LLD	<LLD	<LLD	<LLD
NP-237	6.930E-05	1.864E-05	9.720E-02	2.615E-02
PU-238	1.300E-01	3.471E-02	7.540E-03	2.013E-03
PU-239	2.220E00	5.927E-01	3.530E01	9.425E00
PU-240	4.540E-01	1.212E-01	1.980E00	5.287E-01
PU-241	2.520E00	6.728E-01	2.420E-02	6.461E-03
PU-242	5.600E-05	1.495E-05	1.410E-02	3.765E-03
SR-90	<LLD	<LLD	<LLD	<LLD
U-233	<LLD	<LLD	<LLD	<LLD
U-234	<LLD	<LLD	<LLD	<LLD
U-235	1.510E-06	6.100E-07	6.880E-01	2.780E-01

Container: 10018127
Type: 28 - 85 gal Tall TBO

Current Data

Extended Status: APPROVED CERT
Container Status: CERTIFICATION DATA APPROVED
Certification Date: 03/06/2014
Waste Handling Code: CH
Disposal Date:

Radionuclides

Radionuclide	Activity (Ci)	Activity Uncert (Ci)	Mass (g)	Mass Uncert (g)
U-238	<LLD	<LLD	<LLD	<LLD

Samples

Labor Code	Sample ID	Sample Type Code	Sample Type Description	Sample Date	Layer Sampled
C8	10018127	HGVO-T	HEADSPACE GAS VOC	11/21/2013	0

Unique Samples

CAS Number	Analyte Description	Concentration (ppm)	Analysis Date	Analysis Method	Reporting Flags
100-41-4	ETHYL BENZENE	0.44	11/21/2013	14HG9	U
107-06-2	1,2-DICHLOROETHANE	0.21	11/21/2013	14HG9	U
108-10-1	METHYL ISOBUTYL KETONE	0.69	11/21/2013	14HG9	U
108-67-8	1,3,5-TRIMETHYLBENZENE	0.56	11/21/2013	14HG9	U
108-88-3	TOLUENE	0.63	11/21/2013	14HG9	U
108-90-7	CHLOROBENZENE	0.36	11/21/2013	14HG9	U
108383/106423	M,P-XYLENE	0.26	11/21/2013	14HG9	U
110-82-7	CYCLOHEXANE	6.94	11/21/2013	14HG9	NA
156-59-2	CIS-1,2-DICHLOROETHYLENE	0.14	11/21/2013	14HG9	U
60-29-7	ETHYL ETHER	0.07	11/21/2013	14HG9	U
67-56-1	METHANOL	13.89	11/21/2013	14HG9	NA
67-64-1	ACETONE	0.57	11/21/2013	14HG9	U
71-36-3	BUTANOL	0.47	11/21/2013	14HG9	U
71-43-2	BENZENE	0.1	11/21/2013	14HG9	U

Container: 10018127
Type: 28 - 85 gal Tall TBO

Current Status

Extended Status: APPROVED CERT
Container Status: CERTIFICATION DATA APPROVED
Certification Date: 03/06/2014
Waste Handling Code: CH
Disposal Date:

Samples

Labor Code	Sample ID	Sample Type Code	Sample Type Description	Sample Date	Layer Sampled
C8	10018127	HGVO-T	HEADSPACE GAS VOC	11/21/2013	0

Unique Samples

CAS Number	Analyte Description	Concentration (ppm)	Analysis Date	Analysis Method	Reporting Flags
75-34-3	1,1-DICHLOROETHANE	0.15	11/21/2013	14HG9	U
75-35-4	1,1-DICHLOROETHYLENE	0.47	11/21/2013	14HG9	U
78-93-3	METHYL ETHYL KETONE	0.4	11/21/2013	14HG9	U
95-47-6	O-XYLENE	0.32	11/21/2013	14HG9	U
95-63-6	1,2,4-TRIMETHYLBENZENE	0.62	11/21/2013	14HG9	U

Labor Code	Sample ID	Sample Type Code	Sample Type Description	Sample Date	Layer Sampled
C8	H-10018127	HGHM-T	HEADSPACE GAS HYDROGEN AND METHANE	11/21/2013	0

Unique Samples

CAS Number	Analyte Description	Concentration (ppm)	Analysis Date	Analysis Method	Reporting Flags
1333-74-0	HYDROGEN	83.47	11/21/2013	14HG9	U
74-82-8	METHANE	40.15	11/21/2013	14HG9	U

Material Parameters

Material Parameter	Description	Weight (kg)
9	SOLIDIFIED INORGANIC MATERIAL	218.12
13	STEEL CONTAINER MATERIALS	64.41

Container: 10018127
Type: 28 - 85 gal Tall TBO

Extended Status: APPROVED CERT
Container Status: CERTIFICATION DATA APPROVED
Certification Date: 03/06/2014
Waste Handling Code: CH
Disposal Date:

Material Parameters

Material Parameter	Description	Weight (kg)
14	PLASTIC/LINERS CONTAINER MATERIALS	9.53

Waste Weight:	218.12
Packaging Weight:	73.94
Total Material Weight:	292.06

Hazardous Codes

Hazardous Code	Description
D006	CADMIUM
D007	CHROMIUM
D008	LEAD
D011	SILVER
D029	1,1-DICHLOROETHYLENE
F001	SPENT HALOGENATED SOLVENTS
F002	SPENT HALOGENATED SOLVENTS
F005	SPENT NON-HALOGENATED SOLVENTS
F006	WASTEWATER TREATMENT SLUDGE
F007	SPENT CYANIDE PLATING BATH
F009	SPENT STRIPPING SOLUTION

Assay Methods

Labor Code	Assay Method	Description	Assay Date
BN	9DA2	Z-211-103: CANBERRA DRUM ASSAY	06/09/2008

Container: 10018127
Type: 28 - 85 gal Tall TBO

Current Status
Extended Status: APPROVED CERT
Container Status: CERTIFICATION DATA APPROVED
Certification Date: 03/06/2014
Waste Handling Code: CH
Disposal Date:

Non-Destructive Examination (NDE)

Labor Code	NDE Method	Description	Examination Date
BN	9RR2	RTR SYSTEM (Z-213-106)	05/18/2008

Edit Limit Check Results
Evaluation Date: 03/06/2014 15:28:33 Overall Status: PASS

Evaluation Code	Status	Return Code	Detailed Description
DI_CERT_ALL	PASS		
DI_CERT_BE	PASS		
DI_CERT_CERT	PASS		
DI_CERT_CHARZ	PASS		
DI_CERT_ED	PASS		
DI_CERT_EPA	PASS		
DI_CERT_PCB	PASS		
DI_CERT_PERC	PASS		
DI_CERT_TRAMPAC	PASS		
DSA	PASS		
WAC	PASS		
WAP_CERT	PASS		

TRAMPAC Evaluation Results
Evaluation Date: 03/06/2014 15:28:34 Overall Status: PASS

Evaluation Code	Status	Return Code	Detailed Description
CE_ACT	PASS		
CE_ALL	PASS		
CE_ASP	PASS		
CE_DDH	PASS		

Container: 10018127
Type: 28 - 85 gal Tall TBO

Extended Status: APPROVED CERT
Container Status: CERTIFICATION DATA APPROVED
Certification Date: 03/06/2014
Waste Handling Code: CH
Disposal Date:

TRAMPAC Evaluation Results

Evaluation Date: 03/06/2014 15:28:34 Overall Status: PASS

Evaluation Code	Status
CE_FGE	PASS
CE_FIL	PASS
CE_GVE	PASS
CE_RDR	PASS
CE_TRU	PASS
CE_WGT	PASS

Details

Matrix Depleted Shipping Category:		Compliance Method:	ANALYTICAL
Decay Heat Limit (w):	0.22671146616541354	FGE Limit (g):	200
FGGR (mol/s):	2.1206473432692322E-8	FGGR Limit (mol/s):	3.7593984962406015E-8
Volume Model:		Required Aspiration Time (days):	
Total Headspace VOCs (ppm):	27.29		
Packaging Configuration:	PE_ASSIGNED	DAC Scenario:	
Closure Time (days):		Minimum Closure Time Applied (days):	
Sample-Vent Time (days):	363	Min Sample-Vent Time Applied (days):	21
TFGVC in ICL (mol fr):		MLEL (mol fr):	0.05

History

Event Date/Time	Event Description	Reason
03/06/2014 05:13:48	INSERT DATA INTO THE DATABASE	
03/06/2014 15:28:34	SUCCESSFUL SUBMISSION FOR CERT	
03/06/2014 15:29:13	APPROVED FOR CERT	

AMWTP Advanced Mixed Waste Treatment Project

WDS Certification Data Entry Form

Container ID: 10018127 **WIPP Label:** 10018127

DATA DESCRIPTION	WDS ENTRY
Shipper Site ID	BN
Waste Stream Profile	BN004
WIPP Container Type	28
WAC Revision Number	7.4
Certification Site ID	BN
Waste Handling Code	CH
Waste Stream BIR	IN-BN004
MWIR	IN-BN004
Generator Site ID	RF
IDC	004
Waste Matrix Code	S3150
TRUCON Code	ID211AF
TRU Alpha Activity (Ci)	4.06E+00
TRU Alpha Activity Error (Ci)	6.93E-01
TRU Alpha Activity Concentration (nCi/g)	18633.060
TRU Alpha Activity Concentration Error (nCi/g)	3194.446
Pu239 Fissile Gram Equivalent (FGE)	3.59E+01
Pu239 Fissile Gram Equivalent Error (FGE)	9.43E+00
Pu239 Equivalent Activity (PE-Ci)	4.10E+00
Decay Heat (W)	1.28E-01
Decay Heat Error (W)	2.16E-02
Layers of Packaging	2
Fill Factor (%)	85
Liner Exists	Y
Liner Hole Diameter (mm)	7.62
Liner Lid Present	Y
Process Knowledge Exists	N
PCB Concentration (ppm)	NA
PCB Waste	N
PCB Out of Service Date	N/A
PCB Mass	NA
Total Gas Generation Rate (mol/s)	N/A
Hydrogen/Methane Generation Rate (mol/s)	N/A
Gas Generation Test Completion Date	N/A
Gross Weight (kg)	292.05
Gross Weight Error (kg)	.60
Alpha Surface Contamination (dpm/100 cm2)	19
Beta Gamma Surface Contamination (dpm/100cm2)	199
Neutron Dose Rate (mrem/hr)	.50
Beta Gamma Dose Rate (mrem/hr)	2.00
Aqueous Material	Y
Machine Compacted	N
1/2" Separation Criteria Met for Compacted Waste	NA

Beryllium Mass <= 100 kg	NA	Beryllium <= 1% by Weight	NA
		Beryllium Present	N

AMWTP Advanced Mixed Waste Treatment Project

WDS Certification Data Entry Form

Container ID: 10018127 **WIPP Label:** 10018127

RADIONUCLIDES INFORMATION

Radionuclide	Activity (Ci)	Activity Error (Ci)	Mass (g)	Mass Error (g)
PU-238	1.300E-01	3.471E-02	7.540E-03	2.013E-03
PU-239	2.220E+00	5.927E-01	3.530E+01	9.425E+00
PU-240	4.540E-01	1.212E-01	1.980E+00	5.287E-01
PU-241	2.520E+00	6.728E-01	2.420E-02	6.461E-03
PU-242	5.600E-05	1.495E-05	1.410E-02	3.765E-03
AM-241	1.260E+00	3.364E-01	3.630E-01	9.692E-02
NP-237	6.930E-05	1.864E-05	9.720E-02	2.615E-02
U-235	1.510E-06	6.100E-07	6.880E-01	2.780E-01
CS-137	.000E+00	.000E+00	.000E+00	.000E+00
U-233	.000E+00	.000E+00	.000E+00	.000E+00
U-238	.000E+00	.000E+00	.000E+00	.000E+00
U-234	.000E+00	.000E+00	.000E+00	.000E+00
SR-90	.000E+00	.000E+00	.000E+00	.000E+00

WASTE MATERIAL PARAMETERS

Waste Material Parameter	Description	Material Weight (Kg)
1	Iron-based Metals/Alloys	.00
2	Aluminum-based Metals/Alloys	.00
3	Other metals	.00
4	Other Inorganic Materials	.00
5	(EXPIRED)	.00
6	Cellulosics	.00
7	Rubber	.00
8	Plastic (Waste Materials)	.00
9	Inorganic matrix	218.12
10	Organic matrix	.00
11	(EXPIRED)	.00
12	Soils/gravel	.00
13	Steel (packaging materials)	64.41
14	Plastic (packaging materials)	9.53
15	Cellulosics Packaging	.00
	Total:	292.06

AMWTP Advanced Mixed Waste Treatment Project

WDS Certification Data Entry Form

Container ID: 10018127 **WIPP Label:** 10018127

ASSAY METHODS

Assay Method	Assay Method Date
9DA2	09-JUN-2008

CHARACTERIZATION METHODS

Characterization Method	Characterization Method Date
9RR2	18-MAY-2008

HAZARDOUS CODES

Hazardous Code(s)								
	D006	D007	D008	D011	D029	F001	F002	F005
	F006	F007	F009					

COMMENTS

Comment Type	WIPP Comment
N/A	N/A

ADDITIONAL CERTIFICATION DATA (not Submitted to WDS)

Requirement	Acceptance Criterion	Compliance
Payload Container meets 7A, Type A requirements based on manufacturers specifications.	Payload Container Weight <= the Manufacturers DOT 7A Certified Weight Limit	Y
Unique Container ID, Radioactive and/or Hazard labels	Container Identification/Labeling	Y
Prohibited Liquids	Prohibited	Y
Sealed Containers	No sealed containers > 4 L	Y
Chemical Compatibility	Chemicals allowed by the TRAMPAC	Y
Residual Liquids containing Polychlorinated Biphenyl	Prohibited	Y
Nonradionuclide Pyrophorics	Prohibited	Y
Explosives, Corrosives and Compressed Gases	Prohibited	Y
Non Mixed Hazardous Waste	Prohibited	Y
Sharp/Heavy items blocked or braced	Necessary to provide puncture protection for payload containers	Y
Confinement Layers	Bags closured by approved methods	Y
RCRA Data	Waste Stream Profile Form Approval Date	28-DEC-2005

AMWTP
Advanced Mixed Waste Treatment Project

WDS Certification Data Entry Form

Container ID: 10018127 **WIPP Label:** 10018127

Container Review Statement

I have reviewed the data for this waste container and it is complete and accurate to the best of my knowledge.

Completed By: _____ (Signature) 2/13/14 (Date)

Container Certification Statement and WDS Data Submittal

I hereby certify that I have reviewed the data for this waste container and that it is complete and accurate to the best of my knowledge. I have determined that it meets the requirements stated in the current revision of the CH-WAC. I understand that this information will be made available to regulatory agencies and that there are significant penalties for submitting false information, including the possibility of fines and imprisonment for knowing violations.

Matthew Storms (Printed Name, Waste Certification Official) _____ (Signature) 3-6-2014 (Date)

AMWTP Advanced Mixed Waste Treatment Project

Reconciliation with Data Quality Objectives

Implementing Document: MP-TRUW-8.11

I certify by signature below that data of sufficient type, quality, and quantity are collected to meet WAP DQOs.

WSPF No.: BN004.24 R1

Data Quality Objective	Yes	No	N/A	Comment
1. Have all containers in the lot been assigned the correct Waste Matrix Code?	☒	☐	☐	
2. Have waste material parameter weights been established for each container in the lot?	☒	☐	☐	
3. Does each waste container of waste contain transuranic (TRU) radioactive waste?	☒	☐	☐	
4. Does the waste stream exhibit a toxicity characteristic (TC) under 40 CFR Part 261, Subpart C?	☒	☐	☐	
5. Does the waste stream contain listed waste found in 20.4.1.200 NMAC incorporating 40 CFR, Part 261, Subpart D?	☒	☐	☐	
6. Can the waste stream be classified as hazardous or nonhazardous?	☒	☐	☐	
7. Have the overall completeness, comparability, and representativeness quality assurance objectives (QAOs) been met for each of the testing procedures as specified in MP-TRUW-8.2, Sections C3-2 and C3-3, for the lot?	☒	☐	☐	
8. Was an Open nonconformance report (NCR) search performed for all containers/pucks/source containers on the final list for the waste stream profile/reconciliation lot?	☒	☐	☐	

WSPF No.: BN004.24 R1

Data Quality Objective	Yes	No	N/A	Comment
9. Was an Open NCR search performed for all batches in the final list for the waste stream profile/reconciliation lot?	☒	☐	☐	
10. Were all batches identified in the waste stream profile form (WSPF) or reconciliation lot complete through site project manager (SPM) signature release? List any batches identified as not complete through validation.	☒	☐	☐	
11. Were any open NCRs found that are applicable to the waste stream profile/reconciliation lot? List NCR, container, and batch.	☐	☒	☐	There are no open NCRs for any of the containers or batch data reports associated with the lot.
12. Is there an approved AK Sufficiency Determination for this waste stream?	☐	☒	☐	

Site Project Manager: Sean Caniff (Printed name) — Sean P. Caniff (Signature) — 08/28/2014 (Date)

2nd Site Project Manager: Dave Marquardt (Printed name) — (Signature) — 08/28/2014 (Date)

AMWTP Advanced Mixed Waste Treatment Project	Characterization Information Summary Report	Form-1598 Rev. 9 Effective: 06/12/13 Page 1 of 3

Implementing Document: MP-TRUW-8.14

WSPF Number: BN004 **Lot Number:** 24 R1

SPM

Printed Name: **Sean Caniff** Signature: Sean P. Caniff Date: 08/28/2014

2nd SPM

Printed Name: **Dave Marquardt** Signature: D. M. Marquardt Date: 08/28/2014

SPM signature indicates that the information presented in this package is consistent with batch data reports and indicates concurrence with all information presented in this report.

WSPF Number: BN004 Lot Number: 24 R1

Characterization Information Summary

Characterization Description:

Reconciliation was performed on validated drum file containers obtained from waste stream BN004, Revision 0, Special Setups Waste from the Rocky Flats Environmental Technology Site (RFETS). This Reconciliation Lot BN004.24 consists of 18 containers of mixed transuranic waste. Each drum file was analyzed and all data were reconciled using MP-TRUW-8.11 and MP-TRUW-8.14 WIPP approved procedures.

The absence of prohibited items is determined and documented through acceptable knowledge and confirmation activities. Radiography or visual examination is performed on each container in this waste stream as a confirmation activity. See Table 5 for the associated RTR and Visual examinations. None of the listed containers contains prohibited items as defined by Section C-1c of the Advanced Mixed Waste Treatment Project Quality Assurance Project Plan (QAPjP), MP-TRUW-8.2.

Revision 1 was necessary to remove container 10317845 from this CIS. It was removed due to a high flammable gas generation rate that was observed during Flam Gas testing.

WSPF Number: BN004 Lot Number: 24 R1

Table 1. Correlation of Container Identification Numbers to Data Package.

Container No.	RTR Data Package	RA Data Package	VE Data Package
10016700	RTR10-00122	ASY13-02365	N/A
10018127	RTR08-00093	ASY08-01278	N/A
10018128	RTR08-00093	ASY08-01152	N/A
10023694	RTR11-00171	ASY11-01041	N/A
10023702	RTR10-00229	ASY12-00088	N/A
10023771	RTR12-00181	ASY13-00412	N/A
10023861	RTR08-00117	ASY08-01280	N/A
10023907	RTR12-00178	ASY13-00581	N/A
10024342	RTR12-00180	ASY13-00581	N/A
10043098	RTR10-00279	ASY10-02569	N/A
10072679	RTR05-06385	ASY13-00156	N/A
10074307	RTR11-00151	ASY11-01075	N/A
10097755	RTR11-00019	ASY13-03064	N/A
10163904	RTR10-00194	ASY10-02007	N/A
10174599	RTR10-00227	ASY10-02327	N/A
10177727	RTR12-00180	ASY12-04139	N/A
10457429	RTR12-00148	ASY12-03702	N/A
10503033	RTR13-00230	ASY13-02928	N/A

NOTE: *Footnotes will be added as applicable.*

Storms, Matthew

From: Hernandez, Connie - NWP [Connie.Hernandez@wipp.ws]
Sent: Thursday, March 06, 2014 1:50 PM
To: Poirier, Joe; Bagley, Julia; McCurdy, Stormie; Storms, Matthew; Weyerman, Wade - LANL; Houghton, Joshua - NWP; Valenzuela, Bobbie - NWP; Pyeatt, Brandye - NWP; Kirkes, Creta - NWP; Hensley, Lorraine - NWP
Subject: CCP Flam Gas Completed Drums Lot 1024

The attached list of drums have gone through the CCP CH TRU Waste FGA Certification and WDS Data Entry process for Flammable Gas Sampling and do not have any open CCP NCR's or CAR's and are ready for submittal to WDS.

10016700
10018127
10018128
10023694
10023702
10023771
10023861
10023907
10024342
10043098
10074307
10177716
10177727
10452635
10456550
10486100
[redacted]6911

Thank You.

Connie Hernandez
Central Characterization Project
Nuclear Waste Partnership (NWP) LLC
Contractor for the U.S. Department of Energy
575-234-7209

connie.hernandez@wipp.ws

ENV1-j-1
B-2014-0129
SMCCURDY
03/13/2014

AMWTP
Advanced Mixed Waste Treatment Project

Record Transmittal

Form-1044, Rev. 8
Effective: 11/26/08

Implementing Document: MP-DOCS-18.2

CCN/Box Number: B-2014-0129 Submitter: Stormie McCurdy Phone: 557-6394

Record Media: ☐ Paper ☐ CD/DVD ☐ e-mail files sent to:
☒ Electronic files placed in RM Check-In:
\\Amws0025\enterprise\Records Check-in ☐ Other (List)

Total Number of Pages or Items (if page 2 is used) Submitted (Required): 63

RECORD INFORMATION

If submitting multiple records, generate a box number and enter information on Page 2 of this form.

Record Identification No.: Certified Drum Files

Describe Significant Record Information: (include title/description, approval/completion dates etc., that may be needed for later retrieval)

Certified Drum File's 10000163-BN10512589

Should general viewing of this record on the Home Page be restricted? Yes ☐ (DEFAULT, IF NOT CHECKED, IS NO)

Record Category: (Select one , refer to MP-DOCS-18.2, Appendix B)

☒	Lifetime WIPP	Retention Code:	ENV1-j-1
☐	Nonpermanent WIPP	Retention Code:	ENV1-j-1
☐	Facility Operating Record (FOR)/RCRA	Retention Code:	ENV2-a-1-a
☐	Both FOR/NP WIPP	Retention Code:	ENV2-a-1-a
☐	Vital/Emergency Operating Records	Retention Code:	
☐	Misc Other. Record	Retention Code:	

RECORD VALIDATION

Is this record a QA Record (refer to MP-DOCS-18.2, Appendix A)? ☒ Yes ☐ No IF Yes, Validation is required.

The signature below indicates that the QA record identified above has been reviewed for technical accuracy, legibility, completeness, corrections made appropriately, and is traceable to the work accomplished and/or applicable/traceable to the item or activity to which the record pertains. If individual records have been previously validated and that validation is indicated by stamping, initialing, or signing and dating, then so indicate by writing "SEE RECORDS."

See Records	See Records	See Records
QA Record Validator/Printed Name	Signature	Date

RECORD CUSTODIAN RECEIPT

The signature below indicates that the record identified above has been reviewed for legibility, corrections made appropriately, administrative check for completeness and is ready for submittal to the RMC (no paper/binder clips, sticky notes, separated with colored paper, etc.).

Stormie McCurdy	Stormie McCurdy	03/13/2014
Record Custodian/Printed Name	Signature	Date

RECORD MANAGEMENT CENTER RECEIPT

Signature below indicates the records have been processed and are available on EDMS.

SANDRA ONETL		3-17-14
RMC Specialist/Printed Name	Signature	Date

B-2014-0129

Implementing Document: MP-DOCS-18.2

******DELETE or DISCARD THIS PAGE IF NOT NEEDED******

Record Identification No:	Record Title/Description	Page Count	Approval/Completion Date of Record
10000163	Certified Drum Files	14	3/06/2014
10006854	Certified Drum Files	14	3/06/2014
10016700	Certified Drum Files	13	3/06/2014
10018127 ✓	Certified Drum Files	13	3/06/2014
10018128	Certified Drum Files	13	3/06/2014
10021212	Certified Drum Files	14	3/06/2014
10023694	Certified Drum Files	14	3/06/2014
10023702	Certified Drum Files	13	3/06/2014
10023771	Certified Drum Files	14	3/06/2014
10023861	Certified Drum Files	14	3/06/2014
10023907	Certified Drum Files	13	3/06/2014
10024342	Certified Drum Files	13	3/06/2014
10043098	Certified Drum Files	13	3/06/2014
10072451	Certified Drum Files	14	3/06/2014
10074307	Certified Drum Files	14	3/06/2014
10090150	Certified Drum Files	14	3/06/2014
10113396	Certified Drum Files	14	3/06/2014
10116576	Certified Drum Files	14	3/06/2014
10146992	Certified Drum Files	14	3/06/2014
10177716	Certified Drum Files	14	3/06/2014
10177727	Certified Drum Files	14	3/06/2014
10205078	Certified Drum Files	14	3/06/2014
10218054	Certified Drum Files	14	3/06/2014
10218640	Certified Drum Files	14	3/06/2014
10304010	Certified Drum Files	14	3/06/2014
10325444	Certified Drum Files	14	3/06/2014
10333506	Certified Drum Files	14	3/06/2014
10336163	Certified Drum Files	14	3/06/2014
10339165	Certified Drum Files	14	3/06/2014
10350092	Certified Drum Files	14	3/05/2014
10363811	Certified Drum Files	13	3/06/2014
10367426	Certified Drum Files	14	3/06/2014
10368890	Certified Drum Files	14	3/06/2014

D-2014-0129

Implementing Document: MP-DOCS-18.2

10370189	Certified Drum Files	14	3/06/2014
10391861	Certified Drum Files	14	3/06/2014
10452635	Certified Drum Files	14	3/06/2014
10456550	Certified Drum Files	14	3/06/2014
10471924	Certified Drum Files	14	3/05/2014
10476079	Certified Drum Files	13	3/05/2014
10486100	Certified Drum Files	14	3/06/2014
10486911	Certified Drum Files	14	3/06/2014
BN10316664	Certified Drum Files	14	3/06/2014
BN10390151	Certified Drum Files	14	3/05/2014
BN10469992	Certified Drum Files	12	3/06/2014
BN10473360	Certified Drum Files	12	3/06/2014
BN10473651	Certified Drum Files	12	3/05/2014
BN10476253	Certified Drum Files	12	3/06/2014
BN10488168	Certified Drum Files	13	3/05/2014
BN10492441	Certified Drum Files	12	3/06/2014
BN10511736	Certified Drum Files	12	3/11/2014
BN10511737	Certified Drum Files	12	3/11/2014
BN10511738	Certified Drum Files	13	3/11/2014
BN10511742	Certified Drum Files	12	3/11/2014
BN10512342	Certified Drum Files	13	3/11/2014
BN10512345	Certified Drum Files	13	3/11/2014
BN10512347	Certified Drum Files	12	3/11/2014
BN10512349	Certified Drum Files	12	3/11/2014
BN10512350	Certified Drum Files	13	3/11/2014
BN10512351	Certified Drum Files	13	3/11/2014
BN10512407	Certified Drum Files	13	3/11/2014
BN10512408	Certified Drum Files	12	3/11/2014
BN10512409	Certified Drum Files	13	3/11/2014
BN10512589	Certified Drum Files	12	3/11/2014

DIVIDER

PAGE

QA Container Open & Closed NCR Quick Search
as of September 23, 2014

NCR#	Cntr ID	Open Date	Type	Issue	Disposition / Remediation	Resp Mgr	Status
none	10493493	**No Records**					

Waste Isolation Pilot Plant
Container Data Report

Report Statistics

Report Version:	**2.3**
WDS Instance:	**prd05.wipp.carlsbad.nm.us**
Generated on:	**December 18, 2013 12:35 PM**
Generated by:	**STORMS, MATTHEW**
Total Pages:	**10**

Selection Criteria

Container Number: **BN10493493**

Container: BN10493493
Type: 2 - SWB

Current Status

Extended Status: APPROVED CERT IN PAYLOAD
Container Status: CERTIFICATION DATA APPROVED
Certification Date: 12/17/2013
Waste Handling Code: CH
Disposal Date:

Current Location Site:	IN
Generator Site:	BN
Destination Site ID:	WI
Certification Program ID:	BN
Shipping Program ID:	BN

Neutron Dose Rate (mrem/hr):	2.5
Beta Gamma Dose Rate (mrem/hr):	1.7
Total Dose Rate (mrem/hr):	4.2

FGE (g):	1.584E01
FGE Uncertainty (g):	2.118E00
Gross Weight (kg):	859.87
Gross Weight Uncert (kg):	1.70
Decay Heat (W):	8.139E00
Decay Heat Uncertainty (W):	1.37E00

Shipment Data

Payload ID:	**97468**	Assembly ID:	IN138673	Payload Complete?	Y
Shipment Number:		Send Date:		Receipt Date:	
Shipment Status:					

Certification Data Values

Waste Stream Profile Code:	BN510.2
Waste Type Code:	MTRU
IDC Code:	550
Waste Matrix Code:	S5490
WAC Revision Number:	7.4
Fill Factor (%):	40.00
Waste Stream BIR ID:	IN-BN510.2
Waste Stream MWIR ID:	NA

TRU Alpha Activity (Ci):	2.476E02
TRU Alpha Activity Uncertainty (Ci):	4.165E01
TRU Alpha Activity Concentration (Ci/g):	4.347E-04
PU-239 Equivalent Activity (PE-Ci):	2.253E02
Alpha Surface Contamination (dpm/cm^2):	19.0
Beta/Gamma Surface Contamination (dpm/cm^2):	199.0

Transportation Data Values

Closure Date:	09/11/2013	Shipment Purpose:	DISPOSAL
Vent Date:	09/11/2013	Machine Compacted?	Y
Process Knowledge?	N	Liner Exists?	N
		Liner Hole Size(mm):	
TRUCON Code:	ID121D	Liner Lid Present?	
Shipping Category:	3003400017	Layers of Packaging	0
Aspiration Method:	N	Aqueous Material?	N

Gas Generation Data Values

Measured FGGR (mol/s)	Measured TGRR (mol/s)	Truncated FGGR Test (Y/N)	Truncated FGGR Test Period (days)

Filters

Filter Model Number	Filter Diffusivity (mol/s/ml)	Quantity	Install Date

Container: BN10493493
Type: 2 - SWB

Current Status

Extended Status: APPROVED CERT IN PAYLOAD
Container Status: CERTIFICATION DATA APPROVED
Certification Date: 12/17/2013
Waste Handling Code: CH
Disposal Date:

PCB Waste? N
PCB Mass (kg):
PCB Concentration (ppm):
PCB Out of Service Date:
Be Present? N
Be <= 1% by weight?
Be mass <= 100kg?
Separation OK? Y
Packing Fraction (compaction level): <=70% (partial)

Filters

Filter Model Number	Filter Diffusivity (mol/s/ml)	Quantity	Install Date
NF19SD	1.85E-05	4	09/11/2013

Certification Comments

Radionuclides

Radionuclide	Activity (Ci)	Activity Uncert (Ci)	Mass (g)	Mass Uncert (g)
AM-241	6.157E-01	9.334E-02	1.773E-01	2.687E-02
CS-137	4.364E-08	9.815E-09	4.960E-10	1.120E-10
NP-237	2.896E-05	4.383E-06	4.063E-02	6.148E-03
PU-238	2.458E02	4.165E01	1.423E01	2.412E00
PU-239	8.908E-01	1.321E-01	1.416E01	2.100E00
PU-240	2.959E-01	5.478E-02	1.287E00	2.382E-01
PU-241	1.313E00	9.634E-01	1.263E-02	9.252E-03
PU-242	1.920E-04	4.602E-05	4.838E-02	1.160E-02
SR-90	4.800E-08	5.389E-08	3.480E-10	3.910E-10
U-233	<LLD	<LLD	<LLD	<LLD
U-234	1.552E-05	8.118E-06	2.456E-03	1.285E-03
U-235	3.380E-08	8.822E-09	1.540E-02	4.019E-03

Container: BN10493493
Type: 2 - SWB

Current Status
Extended Status: APPROVED CERT IN PAYLOAD
Container Status: CERTIFICATION DATA APPROVED
Certification Date: 12/17/2013
Waste Handling Code: CH
Disposal Date:

Radionuclides

Radionuclide	Activity (Ci)	Activity Uncert (Ci)	Mass (g)	Mass Uncert (g)
U-238	2.498E-04	4.724E-05	7.347E02	1.389E02

Samples

Labor Code	Sample ID	Sample Type Code	Sample Type Description	Sample Date	Layer Sampled
C8	BN10493493	HGVO-T	HEADSPACE GAS VOC	09/12/2013	0

Unique Samples

CAS Number	Analyte Description	Concentration (ppm)	Analysis Date	Analysis Method	Reporting Flags
100-41-4	ETHYL BENZENE	0.87	09/12/2013	14HG5	U
107-06-2	1,2-DICHLOROETHANE	1.22	09/12/2013	14HG5	U
108-10-1	METHYL ISOBUTYL KETONE	1.88	09/12/2013	14HG5	U
108-67-8	1,3,5-TRIMETHYLBENZENE	1.39	09/12/2013	14HG5	U
108-88-3	TOLUENE	28.75	09/12/2013	14HG5	NA
108-90-7	CHLOROBENZENE	0.85	09/12/2013	14HG5	U
108383/106423	M,P-XYLENE	0.49	09/12/2013	14HG5	U
110-82-7	CYCLOHEXANE	1.79	09/12/2013	14HG5	U
156-59-2	CIS-1,2-DICHLOROETHYLENE	0.2	09/12/2013	14HG5	U
60-29-7	ETHYL ETHER	0.77	09/12/2013	14HG5	U
67-56-1	METHANOL	12.64	09/12/2013	14HG5	U
67-64-1	ACETONE	18.34	09/12/2013	14HG5	NA
71-36-3	BUTANOL	0.89	09/12/2013	14HG5	U
71-43-2	BENZENE	0.41	09/12/2013	14HG5	NA

Container: BN10493493
Type: 2 - SWB

Current Status
Extended Status: APPROVED CERT IN PAYLOAD
Container Status: CERTIFICATION DATA APPROVED
Certification Date: 12/17/2013
Waste Handling Code: CH
Disposal Date:

Samples

Labor Code	Sample ID	Sample Type Code	Sample Type Description	Sample Date	Layer Sampled
C8	BN10493493	HGVO-T	HEADSPACE GAS VOC	09/12/2013	0

Unique Samples

CAS Number	Analyte Description	Concentration (ppm)	Analysis Date	Analysis Method	Reporting Flags
75-34-3	1,1-DICHLOROETHANE	0.94	09/12/2013	14HG5	U
75-35-4	1,1-DICHLOROETHYLENE	1.21	09/12/2013	14HG5	U
78-93-3	METHYL ETHYL KETONE	1.8	09/12/2013	14HG5	U
95-47-6	O-XYLENE	0.72	09/12/2013	14HG5	U
95-63-6	1,2,4-TRIMETHYLBENZENE	1.52	09/12/2013	14HG5	U

Labor Code	Sample ID	Sample Type Code	Sample Type Description	Sample Date	Layer Sampled
C8	H-BN10493493	HGHM-T	HEADSPACE GAS HYDROGEN AND METHANE	09/12/2013	0

Unique Samples

CAS Number	Analyte Description	Concentration (ppm)	Analysis Date	Analysis Method	Reporting Flags
1333-74-0	HYDROGEN	1861.67	09/12/2013	14HG5	NA
74-82-8	METHANE	202.11	09/12/2013	14HG5	U

Material Parameters

Material Parameter	Description	Weight (kg)
1	IRON BASE METAL ALLOYS	378.03
3	OTHER METAL/ALLOYS	0.57

Container: BN10493493
Type: 2 - SWB

Current Status

Extended Status: APPROVED CERT IN PAYLOAD
Container Status: CERTIFICATION DATA APPROVED
Certification Date: 12/17/2013
Waste Handling Code: CH
Disposal Date:

Material Parameters

Material Parameter	Description	Weight (kg)
4	OTHER INORGANIC MATERIALS	0.69
6	CELLULOSICS	92.39
7	RUBBER	1.41
8	PLASTICS	96.48
13	STEEL CONTAINER MATERIALS	290.30
	Waste Weight:	569.57
	Packaging Weight:	290.30
	Total Material Weight:	859.87

Hazardous Codes

Hazardous Code	Description
D004	ARSENIC
D005	BARIUM
D006	CADMIUM
D007	CHROMIUM
D008	LEAD
D009	MERCURY
D010	SELENIUM
D011	SILVER
D022	CHLOROFORM
D027	1,4-DICHLOROBENZENE
D028	1,2-DICHLOROETHANE

Container: BN10493493
Type: 2 - SWB

Extended Status: APPROVED CERT IN PAYLOAD
Container Status: CERTIFICATION DATA APPROVED
Certification Date: 12/17/2013
Waste Handling Code: CH
Disposal Date:

Hazardous Codes

Hazardous Code	Description
D029	1,1-DICHLOROETHYLENE
D030	2,4-DINITROTOLUENE
D032	HEXACHLOROBENZENE
D034	HEXACHLOROETHANE
D037	PENTACHLOROPHENOL
D043	VINYL CHLORIDE
F001	SPENT HALOGENATED SOLVENTS
F002	SPENT HALOGENATED SOLVENTS
F004	SPENT NONHALOGENATED SOLVENTS
F005	SPENT NON-HALOGENATED SOLVENTS
F006	WASTEWATER TREATMENT SLUDGE
F007	SPENT CYANIDE PLATING BATH
F009	SPENT STRIPPING SOLUTION

Assay Methods

Labor Code	Assay Method	Description	Assay Date
BN	9DA1	Z-211-102: CANBERRA DRUM ASSAY	07/07/2007
BN	9DA3	Z-390-100: CANBERRA DAS3	01/17/2012
BN	9DA4	Z-390-101: CANBERRA DAS4	11/29/2011

Non-Destructive Examination (NDE)

Container: BN10493493
Type: 2 - SWB

Current Status
Extended Status: APPROVED CERT IN PAYLOAD
Container Status: CERTIFICATION DATA APPROVED
Certification Date: 12/17/2013
Waste Handling Code: CH
Disposal Date:

Non-Destructive Examination (NDE)

Labor Code	NDE Method	Description	Examination Date
BN	9RR1	RTR SYSTEM (Z-213-101)	07/07/2007
BN	9VE7	BN-VEB: BOX LINE VE (REPACK BOXES TO DRUMS)	01/17/2012

Edit Limit Check Results
Evaluation Date: 12/17/2013 14:00:06 Overall Status: PASS

Evaluation Code	Status	Return Code	Detailed Description
DI_CERT_ALL	PASS		
DI_CERT_BE	PASS		
DI_CERT_CERT	PASS		
DI_CERT_CHARZ	PASS		
DI_CERT_ED	PASS		
DI_CERT_EPA	PASS		
DI_CERT_PCB	PASS		
DI_CERT_PERC	PASS		
DI_CERT_TRAMPAC	PASS		
DSA	PASS		
WAC	PASS		
WAP_CERT	PASS		

TRAMPAC Evaluation Results
Evaluation Date: 12/17/2013 14:00:07 Overall Status: PASS

Evaluation Code	Status	Return Code	Detailed Description
CE_ACT	PASS		
CE_ALL	PASS		

Container: BN10493493
Type: 2 - SWB

Extended Status: APPROVED CERT IN PAYLOAD
Container Status: CERTIFICATION DATA APPROVED
Certification Date: 12/17/2013
Waste Handling Code: CH
Disposal Date:

TRAMPAC Evaluation Results
Evaluation Date: 12/17/2013 14:00:07 Overall Status: PASS

Evaluation Code	Status
CE_ASP	PASS
CE_DDH	PASS
CE_FGE	PASS
CE_FIL	PASS
CE_GVE	PASS
CE_RDR	PASS
CE_TRU	PASS
CE_WGT	PASS

Details

Matrix Depleted Shipping Category:	3001090017	Compliance Method:	MEASUREMENT
Decay Heat Limit (w):	0.834674740484429	FGE Limit (g):	250
FGGR (mol/s):	2.823465824284409E-7	FGGR Limit (mol/s):	2.9411764705882356E-7
Volume Model:	2	Required Aspiration Time (days):	
Total Headspace VOCs (ppm):	76.68		
Packaging Configuration:	PE_ASSIGNED	DAC Scenario:	
Closure Time (days):		Minimum Closure Time Applied (days):	
Sample-Vent Time (days):	1	Min Sample-Vent Time Applied (days):	1
TFGVC in ICL (mol fr):		MLEL (mol fr):	0.05

History

Event Date/Time	Event Description	Reason
11/20/2013 13:15:43	INSERT DATA INTO THE DATABASE	
12/17/2013 14:00:07	SUCCESSFUL SUBMISSION FOR CERT	

Container: BN10493493
Type: 2 - SWB

Current Status

Extended Status: APPROVED CERT IN PAYLOAD
Container Status: CERTIFICATION DATA APPROVED
Certification Date: 12/17/2013
Waste Handling Code: CH
Disposal Date:

History

Event Date/Time	Event Description	Reason
12/17/2013 14:01:26	APPROVED FOR CERT	
12/18/2013 11:14:46	ASSIGNED TO PAYLOAD	

AMWTP
Advanced Mixed Waste Treatment Project

WDS Certification Data Entry Form

Container ID: BN10493493 **WIPP Label:** BN10493493

DATA DESCRIPTION	WDS ENTRY
Shipper Site ID	BN
Waste Stream Profile	BN510.2
WIPP Container Type	2
WAC Revision Number	7.4
Certification Site ID	BN
Waste Handling Code	CH
Waste Stream BIR	IN-BN510.2
MWIR	N/A
Generator Site ID	BN
IDC	550
Waste Matrix Code	S5490
TRUCON Code	ID121D
TRU Alpha Activity (Ci)	2.48E+02
TRU Alpha Activity Error (Ci)	4.17E+01
TRU Alpha Activity Concentration (nCi/g)	434720.108
TRU Alpha Activity Concentration Error (nCi/g)	73464.764
Pu239 Fissile Gram Equivalent (FGE)	1.58E+01
Pu239 Fissile Gram Equivalent Error (FGE)	2.12E+00
Pu239 Equivalent Activity (PE-Ci)	2.25E+02
Decay Heat (W)	8.14E+00
Decay Heat Error (W)	1.37E+00
Layers of Packaging	~~X~~ 0 RS 11-20-13
Fill Factor (%)	40
Liner Exists	N
Liner Hole Diameter (mm)	NA
Liner Lid Present	NA
Process Knowledge Exists	N
PCB Concentration (ppm)	NA
PCB Waste	N
PCB Out of Service Date	N/A
PCB Mass	NA
Total Gas Generation Rate (mol/s)	N/A
Hydrogen/Methane Generation Rate (mol/s)	N/A
Gas Generation Test Completion Date	N/A
Gross Weight (kg)	859.87
Gross Weight Error (kg)	1.70
Alpha Surface Contamination (dpm/100 cm2)	19
Beta Gamma Surface Contamination (dpm/100cm2)	199 RS 11-20-13
Neutron Dose Rate (mrem/hr)	2.5
Beta Gamma Dose Rate (mrem/hr)	1.7
Aqueous Material	N
Machine Compacted	~~N~~ Y RS 11-20-13
1/2" Separation Criteria Met for Compacted Waste	~~NA~~ Y RS 11-20-13

Beryllium Mass <= 100 kg	NA	Beryllium <= 1% by Weight	NA
		Beryllium Present	N

AMWTP Advanced Mixed Waste Treatment Project

WDS Certification Data Entry Form

Container ID: BN10493493 **WIPP Label:** BN10493493

RADIONUCLIDES INFORMATION

Radionuclide	Activity (Ci)	Activity Error (Ci)	Mass (g)	Mass Error (g)
PU-238	2.458E+02	4.165E+01	1.423E+01	2.412E+00
PU-239	8.908E-01	1.321E-01	1.416E+01	2.100E+00
PU-240	2.959E-01	5.478E-02	1.287E+00	2.382E-01
PU-241	1.313E+00	9.634E-01	1.263E-02	9.252E-03
PU-242	1.920E-04	4.602E-05	4.838E-02	1.160E-02
AM-241	6.157E-01	9.334E-02	1.773E-01	2.687E-02
NP-237	2.896E-05	4.383E-06	4.063E-02	6.148E-03
U-235	3.380E-08	8.822E-09	1.540E-02	4.019E-03
CS-137	4.364E-08	9.815E-09	4.960E-10	1.120E-10
U-233	.000E+00	.000E+00	.000E+00	.000E+00
U-238	2.498E-04	4.724E-05	7.347E+02	1.389E+02
U-234	1.552E-05	8.118E-06	2.456E-03	1.285E-03
SR-90	4.800E-08	5.389E-08	3.480E-10	3.910E-10

WASTE MATERIAL PARAMETERS

Waste Material Parameter	Description	Material Weight (Kg)
1	Iron-based Metals/Alloys	378.03
2	Aluminum-based Metals/Alloys	.00
3	Other metals	.57
4	Other Inorganic Materials	.69
5	Vitrified	.00
6	Cellulosics	92.39
7	Rubber	1.41
8	Plastic (Waste Materials)	96.48
9	Inorganic matrix	.00
10	Organic matrix	.00
11	Cement (Solidified)	.00
12	Soils/gravel	.00
13	Steel (packaging materials)	290.30
14	Plastic (packaging materials)	.00
15	Cellulosics Packaging	.00
	Total:	859.87

AMWTP Advanced Mixed Waste Treatment Project

WDS Certification Data Entry Form

Container ID: BN10493493 **WIPP Label:** BN10493493

ASSAY METHODS

Assay Method	Assay Method Date
9DA1	07-JUL-2007
9DA3	17-JAN-2012
9DA4	29-NOV-2011

CHARACTERIZATION METHODS

Characterization Method	Characterization Method Date
9RR1	07-JUL-2007
9VE7	17-JAN-2012

HAZARDOUS CODES

Hazardous Code(s)								
	D004	D005	D006	D007	D008	D009	D010	D011
	D022	D027	D028	D029	D030	D032	D034	D037
	D043	F001	F002	F004	F005	F006	F007	F009

COMMENTS

Comment Type	WIPP Comment
N/A	N/A

AMWTP Advanced Mixed Waste Treatment Project

WDS Certification Data Entry Form

Container ID: BN10493493 **WIPP Label:** BN10493493

ADDITIONAL CERTIFICATION DATA (not Submitted to WDS)

Requirement	Acceptance Criterion	Compliance
Payload Container meets 7A, Type A requirements based on manufacturers specifications.	Payload Container Weight <= the Manufacturers DOT 7A Certified Weight Limit	Y
Unique Container ID, Radioactive and/or Hazard labels	Container Identification/Labeling	Y
Prohibited Liquids	Prohibited	Y
Sealed Containers	No sealed containers > 4 L	Y
Chemical Compatibility	Chemicals allowed by the TRAMPAC	Y
Residual Liquids containing Polychlorinated Biphenyl	Prohibited	Y
Nonradionuclide Pyrophorics	Prohibited	Y
Explosives, Corrosives and Compressed Gases	Prohibited	Y
Non Mixed Hazardous Waste	Prohibited	Y
Sharp/Heavy items blocked or braced	Necessary to provide puncture protection for payload containers	Y
Confinement Layers	Bags closured by approved methods	Y
RCRA Data	Waste Stream Profile Form Approval Date	09-SEP-2013

AMWTP Advanced Mixed Waste Treatment Project

WDS Certification Data Entry Form

Container ID: BN10493493 **WIPP Label:** BN10493493

Container Review Statement

I have reviewed the data for this waste container and it is complete and accurate to the best of my knowledge.

Completed By: _____ (Signature) 11-20-2013 (Date)

Container Certification Statement and WDS Data Submittal

I hereby certify that I have reviewed the data for this waste container and that it is complete and accurate to the best of my knowledge. I have determined that it meets the requirements stated in the current revision of the CH-WAC. I understand that this information will be made available to regulatory agencies and that there are significant penalties for submitting false information, including the possibility of fines and imprisonment for knowing violations.

Stormie McCurdy (Printed Name, Waste Certification Official) _____ (Signature) 12/17/13 (Date)

RECORD
BN510.2.05
B-2013-0426
NKIRK
11/19/2013

AMWTP Advanced Mixed Waste Treatment Project

Reconciliation with Data Quality Objectives

Implementing Document: MP-TRUW-8.11

I certify by signature below that data of sufficient type, quality, and quantity are collected to meet WAP DQOs.

WSPF No.: BN510.2.05

INFORMATION ONL

Data Quality Objective	Yes	No	N/A	Comment
1. Have all containers in the lot been assigned the correct Waste Matrix Code?	☒	☐	☐	
2. Have waste material parameter weights been established for each container in the lot?	☒	☐	☐	
3. Does each waste container of waste contain transuranic (TRU) radioactive waste?	☒	☐	☐	
4. Does the waste stream exhibit a toxicity characteristic (TC) under 40 CFR Part 261, Subpart C?	☒	☐	☐	
5. Does the waste stream contain listed waste found in 20.4.1.200 NMAC incorporating 40 CFR, Part 261, Subpart D?	☒	☐	☐	
6. Can the waste stream be classified as hazardous or nonhazardous?	☒	☐	☐	
7. Have the overall completeness, comparability, and representativeness quality assurance objectives (QAOs) been met for each of the testing procedures as specified in MP-TRUW-8.2, Sections C3-2 and C3-3, for the lot?	☒	☐	☐	
8. Was an Open nonconformance report (NCR) search performed for all containers/pucks/source containers on the final list for the waste stream profile/reconciliation lot?	☒	☐	☐	

WSPF No.: BN510.2.05

Data Quality Objective	Yes	No	N/A	Comment
9. Was an Open NCR search performed for all batches in the final list for the waste stream profile/reconciliation lot?	☒	☐	☐	
10. Were all batches identified in the waste stream profile form (WSPF) or reconciliation lot complete through site project manager (SPM) signature release? List any batches identified as not complete through validation.	☒	☐	☐	
11. Were any open NCRs found that are applicable to the waste stream profile/reconciliation lot? List NCR, container, and batch.	☐	☒	☐	There are no open NCRs for any of the containers or batch data reports associated with the lot.
12. Is there an approved AK Sufficiency Determination for this waste stream?	☐	☒	☐	

Site Project Manager: Nancy Kirk (Printed name) — Nancy Kirk (Signature) — 11/19/13 (Date)

2nd Site Project Manager: Sean Caniff (Printed name) — Sean P. Caniff (Signature) — 11/19/13 (Date)

AMWTP Advanced Mixed Waste Treatment Project	Characterization Information Summary Report	Form-1598 Rev. 9 Effective: 06/12/13 Page 1 of 3

Implementing Document: MP-TRUW-8.14

WSPF Number: BN510.2 **Lot Number:** 05

SPM

Printed Name: Nancy Kirk Signature: Nancy Kirk Date: 11/19/13

2nd SPM

Printed Name: Sean Caniff Signature: Sean P. Caniff Date: 11/19/13

SPM signature indicates that the information presented in this package is consistent with batch data reports and indicates concurrence with all information presented in this report.

Characterization Information Summary

Reconciliation was performed on validated drum file containers obtained from waste stream BN510.2, Revision 0, Supercompacted Debris Waste from the Advanced Mixed Waste Treatment Project. This Reconciliation Lot BN510.2.02 consists of 5 containers of mixed transuranic waste. Each container file was analyzed and all data were reconciled using MP-TRUW-8.11 and MP-TRUW-8.14 WIPP approved procedures.

The absence of prohibited items is determined and documented through acceptable knowledge and confirmation activities. Radiography or visual examination is performed on each container in this waste stream as a confirmation activity. See Table 1 for the associated RTR and Visual examinations. None of the listed containers contains prohibited items as defined by Section C-1c of the Quality Assurance Project Plan, MP-TRUW-8.2.

WSPF Number: BN510.2 **Lot Number:** 05

Table 1. Correlation of Container Identification Numbers to Data Package.

Container No.	RTR Data Package	RA Data Package	VE Data Package
BN10148239	N/A	N/A	N/A
10148203	N/A	ASY07-00981	VEB07-01283
10148210	N/A	ASY07-00981	VEB07-01283
10148215	N/A	ASY07-00972	VEB07-01282
BN10156191	N/A	N/A	N/A
10155964	N/A	ASY07-01673	VEB07-02234
10155996	N/A	ASY07-01675	VEB07-02237
10156003	N/A	ASY07-01675	VEB07-02236
10156054	N/A	ASY07-01675	VEB07-02237
BN10210408	N/A	N/A	N/A
10101046	RTR07-01753	ASY07-02646	N/A
10127095	RTR07-01756	ASY07-02675	N/A
BN10253305	N/A	N/A	N/A
10182260	RTR08-00121	ASY08-01256	N/A
10220010	RTR08-00102	ASY08-01162	N/A
10253207	N/A	ASY08-02056	VEB08-01050
BN10493493	N/A	N/A	N/A
BN10211230	N/A	N/A	N/A
10168818	RTR07-01733	ASY07-02552	N/A
10211069	N/A	ASY08-00354	VEB08-00158
10211070	N/A	ASY08-00354	VEB08-00158
10211129	N/A	ASY08-00355	VEB08-00159
BN10431362	N/A	N/A	N/A
10430077	N/A	ASY11-02674	VEB11-01010
10431257	N/A	ASY12-00173	VEB12-00043
10431386	N/A	ASY12-00173	VEB12-00044
10428000	N/A	ASY11-02431	VEB11-00950

NOTE: *Footnotes will be added as applicable.*

McCurdy, Stormie

From:	Hernandez, Connie - NWP [Connie.Hernandez@wipp.ws]
Sent:	Tuesday, December 17, 2013 1:33 PM
To:	Poirier, Joe; Bagley, Julia; McCurdy, Stormie; Storms, Matthew; Weyerman, Wade - LANL
Cc:	Houghton, Joshua - NWP; Valenzuela, Bobbie - NWP; Pyeatt, Brandye - NWP; Kirkes, Creta - NWP; Hensley, Lorraine - NWP
Subject:	CCP Flam Gas Completed Drums Lot 999

The attached list of drums have gone through the CCP CH TRU Waste FGA Certification and WDS Data Entry process for Flammable Gas Sampling and do not have any open CCP NCR's or CAR's and are ready for submittal to WDS.

BN10493493
BN10493494
BN10493495
BN10493500
BN10493502

Thank You.

Connie Hernandez
Central Characterization Project
Nuclear Waste Partnership (NWP) LLC
Contractor for the U.S. Department of Energy
575-234-7209

connie.hernandez@wipp.ws

RECORD
B-2013-0466
SWALKER
12/23/2013

AMWTP Advanced Mixed Waste Treatment Project

Record Transmittal

Form-1044, Rev. 8
Effective: 11/26/08

Implementing Document: MP-DOCS-18.2

CCN/Box Number: B-2013-0466 Submitter: Stormie McCurdy Phone: 557-6394

Record Media: ☐ Paper ☐ CD/DVD ☐ e-mail files sent to:
☒ Electronic files placed in RM Check-In:
\\Amws0025\enterprise\Records Check-in ☐ Other (List)

Total Number of Pages or Items (if page 2 is used) Submitted (Required): 43

RECORD INFORMATION

If submitting multiple records, generate a box number and enter information on Page 2 of this form.

Record Identification No.: Certified Drum Files

Describe Significant Record Information: (include title/description, approval/completion dates etc., that may be needed for later retrieval)

Certified Drum File's 10314748-BN10493502

Should general viewing of this record on the Home Page be restricted? Yes ☐ (DEFAULT, IF NOT CHECKED, IS NO)

Record Category: (Select one , refer to MP-DOCS-18.2, Appendix B)

☒	Lifetime WIPP	Retention Code:	ENV1-j-1
☐	Nonpermanent WIPP	Retention Code:	ENV1-j-1
☐	Facility Operating Record (FOR)/RCRA	Retention Code:	ENV2-a-1-a
☐	Both FOR/NP WIPP	Retention Code:	ENV2-a-1-a
☐	Vital/Emergency Operating Records	Retention Code:	
☐	Misc Other. Record	Retention Code:	

RECORD VALIDATION

Is this record a QA Record (refer to MP-DOCS-18.2, Appendix A)? ☒ Yes ☐ No IF Yes, Validation is required.

The signature below indicates that the QA record identified above has been reviewed for technical accuracy, legibility, completeness, corrections made appropriately, and is traceable to the work accomplished and/or applicable/traceable to the item or activity to which the record pertains. If individual records have been previously validated and that validation is indicated by stamping, initialing, or signing and dating, then so indicate by writing "SEE RECORDS."

See Records	See Records	See Records
QA Record Validator/Printed Name	Signature	Date

RECORD CUSTODIAN RECEIPT

The signature below indicates that the record identified above has been reviewed for legibility, corrections made appropriately, administrative check for completeness and is ready for submittal to the RMC (no paper/binder clips, sticky notes, separated with colored paper, etc.).

Stormie McCurdy	Stormie McCurdy	12/20/13
Record Custodian/Printed Name	Signature	Date

RECORD MANAGEMENT CENTER RECEIPT

Signature below indicates the records have been processed and are available on EDMS.

S. Walker	Shan Walker	12/23/13
RMC Specialist/Printed Name	Signature	Date

AMWTP Advanced Mixed Waste Treatment Project	Record Transmittal	Form-1044, Rev. 8 Effective: 11/26/08 Page 2 of 3

B-2013-0466 Implementing Document: MP-DOCS-18.2

******DELETE or DISCARD THIS PAGE IF NOT NEEDED******

Record Identification No:	Record Title/Description	Page Count	Approval/Completion Date of Record
10314748	Certified Drum Files	14	12/17/2013
10462219	Certified Drum Files	14	12/17/2013
10463502	Certified Drum Files	14	12/17/2013
10466625	Certified Drum Files	14	12/17/2013
10466630	Certified Drum Files	14	12/17/2013
10470496	Certified Drum Files	14	12/17/2013
10471224	Certified Drum Files	14	12/17/2013
10471415	Certified Drum Files	14	12/17/2013
10471874	Certified Drum Files	14	12/17/2013
10472606	Certified Drum Files	14	12/17/2013
10472617	Certified Drum Files	14	12/17/2013
10472626	Certified Drum Files	14	12/17/2013
10473767	Certified Drum Files	14	12/17/2013
10473861	Certified Drum Files	14	12/17/2013
10474779	Certified Drum Files	14	12/17/2013
10474791	Certified Drum Files	14	12/17/2013
10474804	Certified Drum Files	14	12/17/2013
10479911	Certified Drum Files	14	12/18/2013
10488284	Certified Drum Files	14	12/17/2013
10489401	Certified Drum Files	14	12/17/2013
10498749	Certified Drum Files	14	12/12/2013
10498758	Certified Drum Files	14	12/12/2013
10498760	Certified Drum Files	14	12/12/2013
10498782	Certified Drum Files	14	12/12/2013
10499437	Certified Drum Files	14	12/12/2013
10499438	Certified Drum Files	14	12/12/2013
10499439	Certified Drum Files	14	12/12/2013
10499458	Certified Drum Files	14	12/12/2013
10499459	Certified Drum Files	14	12/12/2013
10499460	Certified Drum Files	14	12/12/2013
10499461	Certified Drum Files	14	12/12/2013
10499543	Certified Drum Files	14	12/12/2013
10499544	Certified Drum Files	14	12/12/2013

33

AMWTP Advanced Mixed Waste Treatment Project	Record Transmittal	Form-1044, Rev. 8 Effective: 11/26/08 Page 3 of 3

B-2013-0466C

Implementing Document: MP-DOCS-18.2

10500797	Certified Drum Files	14	12/12/2013
10500798	Certified Drum Files	14	12/12/2013
10500801	Certified Drum Files	14	12/12/2013
10500807	Certified Drum Files	14	12/12/2013
10500809	Certified Drum Files	14	12/12/2013
BN10493493	Certified Drum Files	16	12/17/2013
BN10493494	Certified Drum Files	14	12/17/2013
BN10493495	Certified Drum Files	14	12/17/2013
BN10493500	Certified Drum Files	14	12/17/2013
BN10493502	Certified Drum Files	14	12/17/2013

43

DIVIDER

PAGE

QA Container Open & Closed NCR Quick Search
as of September 23, 2014

NCR#	Cntr ID	Open Date	Type	Issue	Disposition / Remediation	Resp Mgr	Status
none	10514268	**No Records**					

Report Statistics

Report Version:	**2.3**
WDS Instance:	**prd05.wipp.carlsbad.nm.us**
Generated on:	**May 13, 2014 02:26 PM**
Generated by:	**MCCURDY, STORMIE**
Total Pages:	**9**

Selection Criteria

Container Number: **BN10514268**

Container: BN10514268
Type: 23 - 100 gal

Current Status

Extended Status: APPROVED CERT IN PAYLOAD
Container Status: CERTIFICATION DATA APPROVED
Certification Date: 05/06/2014
Waste Handling Code: CH
Disposal Date:

Current Location Site: IN
Generator Site: BN
Destination Site ID: WI

Certification Program ID: BN
Shipping Program ID: BN

Neutron Dose Rate (mrem/hr): 0.1
Beta Gamma Dose Rate (mrem/hr): 0.1
Total Dose Rate (mrem/hr): 0.2

FGE (g): 5.228E-01
FGE Uncertainty (g): 1.872E-01

Gross Weight (kg): 441.77
Gross Weight Uncert (kg): 1.20

Decay Heat (W): 9.325E-02
Decay Heat Uncertainty (W): 2.355E-02

Shipment Data

Payload ID: **97727**
Assembly ID: IN143290
Payload Complete? Y
Shipment Number:
Send Date:
Receipt Date:
Shipment Status:

Certification Data Values

Waste Stream Profile Code: BN510.3
Waste Type Code: MTRU
IDC Code: 550
Waste Matrix Code: S5490
WAC Revision Number: 7.4
Fill Factor (%): 45.00
Waste Stream BIR ID: IN-BN510.3
Waste Stream MWIR ID: NA

TRU Alpha Activity (Ci): 2.808E00
TRU Alpha Activity Uncertainty (Ci): 7.106E-01
TRU Alpha Activity Concentration (Ci/g): 7.293E-06
PU-239 Equivalent Activity (PE-Ci): 2.564E00
Alpha Surface Contamination (dpm/cm^2): 19.0
Beta/Gamma Surface Contamination (dpm/cm^2): 199.0

Transportation Data Values

Closure Date: 03/20/2014
Vent Date: 03/20/2014
Process Knowledge? N

TRUCON Code: ID121CD
Shipping Category: 3003400035
Aspiration Method: N

Shipment Purpose: DISPOSAL
Machine Compacted? Y
Liner Exists? N
Liner Hole Size(mm):
Liner Lid Present?
Layers of Packaging 0
Aqueous Material? N

Gas Generation Data Values

Measured FGGR (mol/s)	Measured TGRR (mol/s)	Truncated FGGR Test (Y/N)	Truncated FGGR Test Period (days)

Filters

Filter Model Number	Filter Diffusivity (mol/s/ml)	Quantity	Install Date

Container: BN10514268
Type: 23 - 100 gal

Current Status

Extended Status: APPROVED CERT IN PAYLOAD
Container Status: CERTIFICATION DATA APPROVED
Certification Date: 05/06/2014

Waste Handling Code: CH
Disposal Date:

PCB Waste? N
PCB Mass (kg):
PCB Concentration (ppm):
PCB Out of Service Date:
Be Present? N
Be <= 1% by weight?
Be mass <= 100kg?
Separation OK? Y
Packing Fraction (compaction level): <=70% (partial)

Filters

Filter Model Number	Filter Diffusivity (mol/s/ml)	Quantity	Install Date
NF19SD	1.85E-05	1	03/20/2014

Certification Comments

Radionuclides

Radionuclide	Activity (Ci)	Activity Uncert (Ci)	Mass (g)	Mass Uncert (g)
AM-241	1.138E-02	4.431E-03	3.324E-03	1.295E-03
CS-137	2.264E-06	7.061E-07	2.610E-08	8.143E-09
NP-237	5.747E-07	2.196E-07	8.155E-04	3.116E-04
PU-238	2.757E00	7.105E-01	1.613E-01	4.157E-02
PU-239	3.112E-02	1.157E-02	5.025E-01	1.868E-01
PU-240	8.843E-03	3.106E-03	3.896E-02	1.369E-02
PU-241	8.580E-02	7.060E-02	8.336E-04	6.859E-04
PU-242	4.064E-06	1.295E-06	1.030E-03	3.281E-04
SR-90	2.495E-06	2.316E-06	1.812E-08	1.683E-08
U-233	<LLD	<LLD	<LLD	<LLD
U-234	<LLD	<LLD	<LLD	<LLD
U-235	<LLD	<LLD	<LLD	<LLD

Container: BN10514268
Type: 23 - 100 gal

Current Status
Extended Status: APPROVED CERT IN PAYLOAD
Container Status: CERTIFICATION DATA APPROVED
Certification Date: 05/06/2014
Waste Handling Code: CH
Disposal Date:

Radionuclides

Radionuclide	Activity (Ci)	Activity Uncert (Ci)	Mass (g)	Mass Uncert (g)
U-238	<LLD	<LLD	<LLD	<LLD

Samples

Labor Code	Sample ID	Sample Type Code	Sample Type Description	Sample Date	Layer Sampled
C8	BN10514268	HGVO-T	HEADSPACE GAS VOC	04/10/2014	0

Unique Samples

CAS Number	Analyte Description	Concentration (ppm)	Analysis Date	Analysis Method	Reporting Flags
100-41-4	ETHYL BENZENE	0.76	04/10/2014	14HG6	U
107-06-2	1,2-DICHLOROETHANE	0.98	04/10/2014	14HG6	U
108-10-1	METHYL ISOBUTYL KETONE	1.25	04/10/2014	14HG6	U
108-67-8	1,3,5-TRIMETHYLBENZENE	0.61	04/10/2014	14HG6	U
108-88-3	TOLUENE	1.39	04/10/2014	14HG6	U
108-90-7	CHLOROBENZENE	0.67	04/10/2014	14HG6	U
108383/106423	M,P-XYLENE	0.85	04/10/2014	14HG6	NA
110-82-7	CYCLOHEXANE	2.44	04/10/2014	14HG6	U
156-59-2	CIS-1,2-DICHLOROETHYLENE	0.18	04/10/2014	14HG6	U
60-29-7	ETHYL ETHER	0.3	04/10/2014	14HG6	U
67-56-1	METHANOL	5.97	04/10/2014	14HG6	U
67-64-1	ACETONE	3.83	04/10/2014	14HG6	U
71-36-3	BUTANOL	0.66	04/10/2014	14HG6	U
71-43-2	BENZENE	0.42	04/10/2014	14HG6	U

Container: BN10514268
Type: 23 - 100 gal

Current Status
Extended Status: APPROVED CERT IN PAYLOAD
Container Status: CERTIFICATION DATA APPROVED
Certification Date: 05/06/2014
Waste Handling Code: CH
Disposal Date:

Samples

Labor Code	Sample ID	Sample Type Code	Sample Type Description	Sample Date	Layer Sampled
C8	BN10514268	HGVO-T	HEADSPACE GAS VOC	04/10/2014	0

Unique Samples

CAS Number	Analyte Description	Concentration (ppm)	Analysis Date	Analysis Method	Reporting Flags
75-34-3	1,1-DICHLOROETHANE	2.01	04/10/2014	14HG6	U
75-35-4	1,1-DICHLOROETHYLENE	2.0	04/10/2014	14HG6	U
78-93-3	METHYL ETHYL KETONE	2.08	04/10/2014	14HG6	U
95-47-6	O-XYLENE	0.48	04/10/2014	14HG6	NA
95-63-6	1,2,4-TRIMETHYLBENZENE	0.76	04/10/2014	14HG6	U

Labor Code	Sample ID	Sample Type Code	Sample Type Description	Sample Date	Layer Sampled
C8	H-BN10514268	HGHM-T	HEADSPACE GAS HYDROGEN AND METHANE	04/10/2014	0

Unique Samples

CAS Number	Analyte Description	Concentration (ppm)	Analysis Date	Analysis Method	Reporting Flags
1333-74-0	HYDROGEN	179.68	04/10/2014	14HG6	NA
74-82-8	METHANE	176.17	04/10/2014	14HG6	U

Material Parameters

Material Parameter	Description	Weight (kg)
1	IRON BASE METAL ALLOYS	366.99
4	OTHER INORGANIC MATERIALS	1.52

Container: BN10514268
Type: 23 - 100 gal

Current Status

Extended Status: APPROVED CERT IN PAYLOAD
Container Status: CERTIFICATION DATA APPROVED
Certification Date: 05/06/2014
Waste Handling Code: CH
Disposal Date:

Material Parameters

Material Parameter	Description	Weight (kg)
6	CELLULOSICS	1.96
7	RUBBER	1.41
8	PLASTICS	13.20
13	STEEL CONTAINER MATERIALS	56.70
	Waste Weight:	385.08
	Packaging Weight:	56.70
	Total Material Weight:	441.78

Hazardous Codes

Hazardous Code	Description
D004	ARSENIC
D005	BARIUM
D006	CADMIUM
D007	CHROMIUM
D008	LEAD
D009	MERCURY
D010	SELENIUM
D011	SILVER
D022	CHLOROFORM
D027	1,4-DICHLOROBENZENE
D028	1,2-DICHLOROETHANE
D029	1,1-DICHLOROETHYLENE

Container: BN10514268
Type: 23 - 100 gal

Current Status

Extended Status: APPROVED CERT IN PAYLOAD
Container Status: CERTIFICATION DATA APPROVED
Certification Date: 05/06/2014
Waste Handling Code: CH
Disposal Date:

Hazardous Codes

Hazardous Code	Description
D030	2,4-DINITROTOLUENE
D032	HEXACHLOROBENZENE
D033	HEXACHLOROBUTADIENE
D034	HEXACHLOROETHANE
D037	PENTACHLOROPHENOL
D043	VINYL CHLORIDE
F001	SPENT HALOGENATED SOLVENTS
F002	SPENT HALOGENATED SOLVENTS
F004	SPENT NONHALOGENATED SOLVENTS
F005	SPENT NON-HALOGENATED SOLVENTS
F006	WASTEWATER TREATMENT SLUDGE
F007	SPENT CYANIDE PLATING BATH
F009	SPENT STRIPPING SOLUTION

Assay Methods

Labor Code	Assay Method	Description	Assay Date
BN	9DA3	Z-390-100: CANBERRA DAS3	03/19/2014
BN	9DA4	Z-390-101: CANBERRA DAS4	03/13/2014

Non-Destructive Examination (NDE)

Labor Code	NDE Method	Description	Examination Date

Container: BN10514268
Type: 23 - 100 gal

Current Status
Extended Status: APPROVED CERT IN PAYLOAD
Container Status: CERTIFICATION DATA APPROVED
Certification Date: 05/06/2014
Waste Handling Code: CH
Disposal Date:

Non-Destructive Examination (NDE)

Labor Code	NDE Method	Description	Examination Date
BN	9VE7	BN-VEB: BOX LINE VE (REPACK BOXES TO DRUMS)	03/19/2014

Edit Limit Check Results
Evaluation Date: 05/06/2014 09:34:25 Overall Status: PASS

Evaluation Code	Status	Return Code	Detailed Description
DI_CERT_ALL	PASS		
DI_CERT_BE	PASS		
DI_CERT_CERT	PASS		
DI_CERT_CHARZ	PASS		
DI_CERT_ED	PASS		
DI_CERT_EPA	PASS		
DI_CERT_PCB	PASS		
DI_CERT_PERC	PASS		
DI_CERT_TRAMPAC	PASS		
DSA	PASS		
WAC	PASS		
WAP_CERT	PASS		

TRAMPAC Evaluation Results
Evaluation Date: 05/06/2014 09:34:28 Overall Status: PASS

Evaluation Code	Status	Return Code	Detailed Description
CE_ACT	PASS		
CE_ALL	PASS		
CE_ASP	PASS		
CE_DDH	PASS		

Container: BN10514268
Type: 23 - 100 gal

Current Status

Extended Status: APPROVED CERT IN PAYLOAD
Container Status: CERTIFICATION DATA APPROVED
Certification Date: 05/06/2014
Waste Handling Code: CH
Disposal Date:

TRAMPAC Evaluation Results

Evaluation Date: 05/06/2014 09:34:28 Overall Status: PASS

Evaluation Code	Status
CE_FGE	PASS
CE_FIL	PASS
CE_GVE	PASS
CE_RDR	PASS
CE_TRU	PASS
CE_WGT	PASS

Details

Matrix Depleted Shipping Category:	3001090035	Compliance Method:	TCM ANALYTICAL
Decay Heat Limit (w):	0.40541344537815127	FGE Limit (g):	200
FGGR (mol/s):	8.643596500000002E-9	FGGR Limit (mol/s):	1.4285714285714287E-7
Volume Model:		Required Aspiration Time (days):	
Total Headspace VOCs (ppm):	27.64		
Packaging Configuration:	COMMON_PACKAGING 7	DAC Scenario:	3
Closure Time (days):	0	Minimum Closure Time Applied (days):	53
Sample-Vent Time (days):	21	Min Sample-Vent Time Applied (days):	2
TFGVC in ICL (mol fr):		MLEL (mol fr):	0.05

History

Event Date/Time	Event Description	Reason
04/15/2014 15:01:37	INSERT DATA INTO THE DATABASE	
05/06/2014 09:34:28	SUCCESSFUL SUBMISSION FOR CERT	
05/06/2014 09:37:36	APPROVED FOR CERT	
05/07/2014 13:15:21	ASSIGNED TO PAYLOAD	

AMWTP CH-TRU WASTE CERTIFICATION DOCUMENT

Date: 15-Apr-2014
Time: 12:11

Container ID: BN10514268
Generator Site ID/IDC: BN 550 **IDC Description:** Supercompacted Debris

Container Type: 23 100-Gallon Drum
WAC Revision: 7.4
Waste Stream Profile Code: BN510.3
TRUCON: ID121CD
Gross Weight (kg): 441.77
Layers of Packaging: 0

WSPF Approval Date: 27-NOV-2013
Waste Matrix Code: S5490
Gross Weight Error (kg): 1.20
Fill Factor (%): 45

Radionuclide Composition

Isotope	Activity (Ci)	Activity Uncertainty (Ci)	Mass (g)	Mass Uncertainty (g)
AM241	1.1376E-02	4.4315E-03	3.3241E-03	1.2952E-03
CS137	2.2642E-06	7.0607E-07	2.6099E-08	8.1430E-09
NP237	5.7470E-07	2.1960E-07	8.1550E-04	3.1161E-04
PU238	2.7570E+00	7.1045E-01	1.6130E-01	4.1570E-02
PU239	3.1117E-02	1.1565E-02	5.0250E-01	1.8679E-01
PU240	8.8425E-03	3.1064E-03	3.8960E-02	1.3688E-02
PU241	8.5798E-02	7.0597E-02	8.3363E-04	6.8593E-04
PU242	4.0642E-06	1.2946E-06	1.0303E-03	3.2809E-04
SR90	2.4946E-06	2.3159E-06	1.8121E-08	1.6831E-08
U233	<LLD	<LLD	<LLD	<LLD
U234	<LLD	<LLD	<LLD	<LLD
U235	<LLD	<LLD	<LLD	<LLD
U238	<LLD	<LLD	<LLD	<LLD

PU239 Fissile Gram Equivalent (FGE): 5.23E-01
Decay Heat (Watts): 9.33E-02
TRU Alpha Activity (Ci): 2.81E+00
TRU Alpha Activity Conc. (nCi/g): 7.29E+03
PU239 Equiv. Activity (PE-Ci): 2.56E+00
Beta/Gamma Dose Rate (mR/hr): 0.10
Neutron Dose Rate (mR/hr): 0.10
Sealed Containers > 4 Liters: No
Prohibited Liquids: No
Pressurized Containers (compressed gases): No
Beryllium Present: No
Beryllium Mass <= 100 kg: NA
Beryllium <= 1 % by Weight: NA
Machine Compacted: Yes

PU239 Fissile Gram Equivalent Error (FGE): 1.87E-01
Decay Heat Error (Watts): 2.36E-02
TRU Alpha Activity Error (Ci): 7.11E-01
TRU Alpha Activity Conc. Error (nCi/g): 1.85E+03
Alpha Contamination (dpm/cm2): 19
Beta/Gamma Contamination (dpm/cm2): 199
Pyrophoric Materials < 1%: Yes
Chemical Compatibility: Yes
Explosives: No
Corrosives: No
Polychlorinated Biphenyl (PCB) Conc (ppm): NA
PCB Waste: No
PCB Mass (kg): NA
PCB out of Service Date: N/A
Aqueous Material: No
1/2" Separation Criteria Met for Compacted Waste: Yes

WIPP Comments

Comment Type	Comment
Hazardous Waste Codes:	*D004, D005, D006, D007, D008, D009, D010, D011, D022, D027, D028, D029, D030, D032, D033, D034, D037, D043, F001, F002, F004, F005, F006, F007, F009*
Container IDs in the Overpack/Puck Drum:	*10514381, 10514386, 10514451, 10514374*

AMWTP
Advanced Mixed Waste Treatment Project

AMWTP CH-TRU WASTE CERTIFICATION DOCUMENT

Date: 15-Apr-2014
Time: 12:11

Container ID: BN10514268
Generator Site ID/IDC: BN 550 **IDC Description:** Supercompacted Debris

Container Review Statement

I have reviewed the data for this waste Container and it is complete and accurate to the best of my Knowledge.

Completed By: MATTHEW STORMS / 15-APR-2014 12:04:02

Signature Date

Container Certification Statement and WDS Data Submittal

I hereby certify that I have reviewed the data for this waste container and that it is complete and accurate to the best of my knowledge. I have determined that it meets the requirements stated in the current revision of the CH-WAC. I understand this information will be made available to regulatory agencies and that there are significant penalties for submitting false information, including the possibility of fines and imprisonment for known violations.

Stormie McCauley / [signature] / 5/6/14

Printed Name Signature 5/6/14 Date

AMWTP
Advanced Mixed Waste Treatment Project

Reconciliation with Data Quality Objectives

Date: 16-SEP-2014
Time: 10:29:48 AM

Lot Number: BN510.3.0016

	Data Quality Objective	Answer	Comment
1	Have all containers in the lot been assigned the correct Waste Matrix Code?	YES	
2	Have waste material parameter weights been established for each container in the lot?	YES	
3	Does each waste container of waste contain transuranic (TRU) radioactive waste?	YES	
4	Does the waste stream exhibit a toxicity characteristic (TC) under 40 CFR Part 261, Subpart C?	YES	INFORMATION ONLY
5	Does the waste stream contain listed waste found in 20.4.1.200 NMAC incorporating 40 CFR, Part 261, Subpart D?	YES	
6	Can the waste stream be classified as hazardous or nonhazardous?	YES	
7	Have the overall completeness, comparability, and representativeness quality assurance objectives (QAOs) been met for each of the testing procedures as specified in MP-TRUW-8.2, Sections C3-2 and C3-3, for the lot?	YES	
8	Was an Open nonconformance report (NCR) search performed for all containers/pucks/source containers on the final list for the waste stream profile/reconciliation lot?	YES	
9	Was an Open NCR search performed for all batches in the final list for the waste stream profile/reconciliation lot?	YES	
10	Were all batches identified in the waste stream profile form (WSPF) or reconciliation lot complete through site project manager (SPM) signature release? List any batches identified as not complete through validation.	YES	
11	Were any open NCRs found that are applicable to the waste stream profile/reconciliation lot? List NCR, container, and batch.	NO	There are no open NCRs for any of the containers or batch data reports associated with the lot
12	Is there an approved AK Sufficiency Determination for this waste stream?	NO	

Site Project Manager: CESAR ROJAS

Date: 15-APR-14

AMWTP
Advanced Mixed Waste Treatment Project

Reconciliation Narrative Report

Date: 16-SEP-2014
Time: 10:33:58 AM

Lot Number: BN510.3.0016

Narrative Comments

Reconciliation was performed on validated drum file containers obtained from waste stream BN510.3, Revision 0, Supercompacted Debris Waste from the Advanced Mixed Waste Treatment Project. This Reconciliation Lot BN510.3.0016 consists of 25 containers of mixed transuranic waste. Each container file was analyzed and all data were reconciled using MP-TRUW-8.11 and MP-TRUW-8.14 WIPP approved procedures.

The absence of prohibited items is determined and documented through acceptable knowledge and confirmation activities. Radiography or visual examination is performed in each container in this waste stream as a confirmation activity. See Batch Correlation Tab for the associated RTR and Visual examinations. None of the listed containers contains prohibited items as defined by Section C-1c of the Quality Assurance Project Plan, MP-TRUW-8.2.

Site Project Manager: CESAR ROJAS **Date:** 15-APR-14

AMWTP
Advanced Mixed Waste Treatment Project

Reconciliation Batch Correlation Table

Date: 16-SEP-2014
Time: 10:37:42 AM

Lot Number: BN510.3.0016

[redacted]tainer ID	Headspace Gas WAP Batch	RTR Batc	Assay Batch	Visual Examination Batch	Solid Sampling Batch	Solid Analytical Batch
BN10514267	N/A	N/A	N/A	N/A	N/A	N/A
10514285	N/A	N/A	ASY14-00703	VEB14-00082	N/A	N/A
10514375	N/A	N/A	ASY14-00704	VEB14-00082	N/A	N/A
10514452	N/A	N/A	ASY14-00707	VEB14-00086	N/A	N/A
BN10514268	N/A	N/A	N/A	N/A	N/A	N/A
10514374	N/A	N/A	ASY14-00649	VEB14-00082	N/A	N/A
10514381	N/A	N/A	ASY14-00560	VEB14-00082	N/A	N/A
10514386	N/A	N/A	ASY14-00560	VEB14-00082	N/A	N/A
10514451	N/A	N/A	ASY14-00706	VEB14-00086	N/A	N/A
BN10514269	N/A	N/A	N/A	N/A	N/A	N/A
10506802	N/A	N/A	ASY13-03499	VEB13-00519	N/A	N/A
10514399	N/A	N/A	ASY14-00703	VEB14-00086	N/A	N/A
BN10514270	N/A	N/A	N/A	N/A	N/A	N/A
10514379	N/A	N/A	ASY14-00559	VEB14-00082	N/A	N/A
10514382	N/A	N/A	ASY14-00652	VEB14-00082	N/A	N/A
10514395	N/A	N/A	ASY14-00703	VEB14-00086	N/A	N/A
10514458	N/A	N/A	ASY14-00709	VEB14-00086	N/A	N/A
10514459	N/A	N/A	ASY14-00708	VEB14-00086	N/A	N/A
BN10514271	N/A	N/A	N/A	N/A	N/A	N/A
10514396	N/A	N/A	ASY14-00703	VEB14-00086	N/A	N/A
10514403	N/A	N/A	ASY14-00703	VEB14-00082	N/A	N/A
10514404	N/A	N/A	ASY14-00650	VEB14-00085	N/A	N/A
10514455	N/A	N/A	ASY14-00708	VEB14-00087	N/A	N/A
10514464	N/A	N/A	ASY14-00703	VEB14-00086	N/A	N/A
BN10514274	N/A	N/A	N/A	N/A	N/A	N/A
[redacted]514393	N/A	N/A	ASY14-00705	VEB14-00086	N/A	N/A
10514400	N/A	N/A	ASY14-00705	VEB14-00086	N/A	N/A
10514401	N/A	N/A	ASY14-00705	VEB14-00086	N/A	N/A
10514402	N/A	N/A	ASY14-00705	VEB14-00086	N/A	N/A
BN10514275	N/A	N/A	N/A	N/A	N/A	N/A
10514389	N/A	N/A	ASY14-00704	VEB14-00082	N/A	N/A
10514394	N/A	N/A	ASY14-00704	VEB14-00086	N/A	N/A
10514398	N/A	N/A	ASY14-00705	VEB14-00086	N/A	N/A
10514453	N/A	N/A	ASY14-00707	VEB14-00086	N/A	N/A
BN10514276	N/A	N/A	N/A	N/A	N/A	N/A
10511849	N/A	N/A	ASY14-00274	VEB14-00038	N/A	N/A
10514278	N/A	N/A	ASY14-00559	VEB14-00082	N/A	N/A
10514376	N/A	N/A	ASY14-00650	VEB14-00082	N/A	N/A
10514391	N/A	N/A	ASY14-00652	VEB14-00082	N/A	N/A
10514454	N/A	N/A	ASY14-00708	VEB14-00086	N/A	N/A
BN10514514	N/A	N/A	N/A	N/A	N/A	N/A
10514473	N/A	N/A	ASY14-00801	VEB14-00087	N/A	N/A
10514476	N/A	N/A	ASY14-00799	VEB14-00087	N/A	N/A
10514479	N/A	N/A	ASY14-00800	VEB14-00087	N/A	N/A
BN10514516	N/A	N/A	N/A	N/A	N/A	N/A
10514460	N/A	N/A	ASY14-00706	VEB14-00086	N/A	N/A
BN10514521	N/A	N/A	N/A	N/A	N/A	N/A
10513829	N/A	N/A	ASY14-00686	VEB14-00074	N/A	N/A
10514450	N/A	N/A	ASY14-00703	VEB14-00086	N/A	N/A
10514461	N/A	N/A	ASY14-00710	VEB14-00086	N/A	N/A
BN10516727	N/A	N/A	N/A	N/A	N/A	N/A
[redacted]10516202	N/A	N/A	ASY14-00803	VEB14-00089	N/A	N/A
[redacted]516235	N/A	N/A	ASY14-00805	VEB14-00089	N/A	N/A
[redacted]0516242	N/A	N/A	ASY14-00803	VEB14-00089	N/A	N/A

AMWTP
Advanced Mixed Waste Treatment Project

Reconciliation Batch Correlation Table

Date: 16-SEP-2014
Time: 10:37:42 AM

[redacted]tainer ID	Headspace Gas WAP Batch	RTR Batc	Assay Batch	Visual Examination Batch	Solid Sampling Batch	Solid Analytical Batch
BN10516733	N/A	N/A	N/A	N/A	N/A	N/A
10507230	N/A	N/A	ASY14-00040	VEB14-00003	N/A	N/A
10514469	N/A	N/A	ASY14-00800	VEB14-00087	N/A	N/A
10514475	N/A	N/A	ASY14-00800	VEB14-00087	N/A	N/A
BN10516735	N/A	N/A	N/A	N/A	N/A	N/A
10516292	N/A	N/A	ASY14-00805	VEB14-00089	N/A	N/A
10516296	N/A	N/A	ASY14-00805	VEB14-00089	N/A	N/A
10516297	N/A	N/A	ASY14-00805	VEB14-00089	N/A	N/A
10516304	N/A	N/A	ASY14-00808	VEB14-00090	N/A	N/A
BN10516831	N/A	N/A	N/A	N/A	N/A	N/A
10516196	N/A	N/A	ASY14-00809	VEB14-00090	N/A	N/A
10516236	N/A	N/A	ASY14-00805	VEB14-00089	N/A	N/A
10516295	N/A	N/A	ASY14-00805	VEB14-00089	N/A	N/A
10516299	N/A	N/A	ASY14-00803	VEB14-00089	N/A	N/A
10516303	N/A	N/A	ASY14-00803	VEB14-00089	N/A	N/A
BN10516832	N/A	N/A	N/A	N/A	N/A	N/A
10514462	N/A	N/A	ASY14-00805	VEB14-00089	N/A	N/A
10516223	N/A	N/A	ASY14-00805	VEB14-00089	N/A	N/A
10516233	N/A	N/A	ASY14-00808	VEB14-00090	N/A	N/A
10516293	N/A	N/A	ASY14-00806	VEB14-00090	N/A	N/A
10516309	N/A	N/A	ASY14-00803	VEB14-00089	N/A	N/A
BN10516872	N/A	N/A	N/A	N/A	N/A	N/A
10514456	N/A	N/A	ASY14-00800	VEB14-00087	N/A	N/A
10516225	N/A	N/A	ASY14-00813	VEB14-00092	N/A	N/A
10516464	N/A	N/A	ASY14-00817	VEB14-00092	N/A	N/A
[redacted]516480	N/A	N/A	ASY14-00817	VEB14-00093	N/A	N/A
[redacted]10516887	N/A	N/A	N/A	N/A	N/A	N/A
10516204	N/A	N/A	ASY14-00822	VEB14-00094	N/A	N/A
10516244	N/A	N/A	ASY14-00822	VEB14-00094	N/A	N/A
10516446	N/A	N/A	ASY14-00822	VEB14-00093	N/A	N/A
10516447	N/A	N/A	ASY14-00822	VEB14-00094	N/A	N/A
10516471	N/A	N/A	ASY14-00821	VEB14-00093	N/A	N/A
BN10516888	N/A	N/A	N/A	N/A	N/A	N/A
10516193	N/A	N/A	ASY14-00822	VEB14-00094	N/A	N/A
10516198	N/A	N/A	ASY14-00847	VEB14-00094	N/A	N/A
10516229	N/A	N/A	ASY14-00822	VEB14-00094	N/A	N/A
10516407	N/A	N/A	ASY14-00847	VEB14-00095	N/A	N/A
BN10516889	N/A	N/A	N/A	N/A	N/A	N/A
10516402	N/A	N/A	ASY14-00849	VEB14-00096	N/A	N/A
10516409	N/A	N/A	ASY14-00849	VEB14-00095	N/A	N/A
10516424	N/A	N/A	ASY14-00849	VEB14-00096	N/A	N/A
10516434	N/A	N/A	ASY14-00849	VEB14-00096	N/A	N/A
10516478	N/A	N/A	ASY14-00849	VEB14-00096	N/A	N/A
10516525	N/A	N/A	ASY14-00849	VEB14-00095	N/A	N/A
BN10516891	N/A	N/A	N/A	N/A	N/A	N/A
10516401	N/A	N/A	ASY14-00845	VEB14-00094	N/A	N/A
10516404	N/A	N/A	ASY14-00845	VEB14-00095	N/A	N/A
10516448	N/A	N/A	ASY14-00845	VEB14-00094	N/A	N/A
10516482	N/A	N/A	ASY14-00850	VEB14-00095	N/A	N/A
10516562	N/A	N/A	ASY14-00845	VEB14-00095	N/A	N/A
BN10516892	N/A	N/A	N/A	N/A	N/A	N/A
10516195	N/A	N/A	ASY14-00847	VEB14-00094	N/A	N/A
10516425	N/A	N/A	ASY14-00847	VEB14-00095	N/A	N/A
10516456	N/A	N/A	ASY14-00820	VEB14-00093	N/A	N/A
[redacted]516460	N/A	N/A	ASY14-00847	VEB14-00095	N/A	N/A
[redacted]0516468	N/A	N/A	ASY14-00821	VEB14-00094	N/A	N/A
10516561	N/A	N/A	ASY14-00847	VEB14-00095	N/A	N/A

AMWTP
Advanced Mixed Waste Treatment Project

Reconciliation Batch Correlation Table

Date: 16-SEP-2014
Time: 10:37:42 AM

ainer ID	Headspace Gas WAP Batch	RTR Batc	Assay Batch	Visual Examination Batch	Solid Sampling Batch	Solid Analytical Batch
BN10516893	N/A	N/A	N/A	N/A	N/A	N/A
10516224	N/A	N/A	ASY14-00821	VEB14-00094	N/A	N/A
10516231	N/A	N/A	ASY14-00820	VEB14-00094	N/A	N/A
10516232	N/A	N/A	ASY14-00820	VEB14-00094	N/A	N/A
10516420	N/A	N/A	ASY14-00847	VEB14-00095	N/A	N/A
10516465	N/A	N/A	ASY14-00820	VEB14-00094	N/A	N/A
BN10517020	N/A	N/A	N/A	N/A	N/A	N/A
10516212	N/A	N/A	ASY14-00819	VEB14-00094	N/A	N/A
10516437	N/A	N/A	ASY14-00845	VEB14-00095	N/A	N/A
10516443	N/A	N/A	ASY14-00845	VEB14-00094	N/A	N/A
10516564	N/A	N/A	ASY14-00851	VEB14-00096	N/A	N/A
BN10517021	N/A	N/A	N/A	N/A	N/A	N/A
10516238	N/A	N/A	ASY14-00820	VEB14-00094	N/A	N/A
10516427	N/A	N/A	ASY14-00848	VEB14-00095	N/A	N/A
10516429	N/A	N/A	ASY14-00851	VEB14-00096	N/A	N/A
10516444	N/A	N/A	ASY14-00860	VEB14-00096	N/A	N/A
10516474	N/A	N/A	ASY14-00820	VEB14-00093	N/A	N/A
10516559	N/A	N/A	ASY14-00848	VEB14-00095	N/A	N/A

Storms, Matthew

From: Valenzuela, Bobbie - NWP [bobbie.valenzuela@wipp.ws]
Sent: Tuesday, May 06, 2014 7:08 AM
To: Storms, Matthew
Subject: FW: NCR/CAR Check on 26 Miscellaneous Flam Gas Containers
Attachments: NCR_BDR_CONTAINER_CHECK_jonesl(1).xls

I wasn't sure if you got this yesterday. Have a great day!

Thanks,
Bobbie Valenzuela
Central Characterization Project
Nuclear Waste Partnership LLC
Contractor for the U.S. Department of Energy
575-234-7161

From: Jones, Laura - NWP
Sent: Monday, May 05, 2014 3:49 PM
To: Dominguez, Lena - NWP; Pettus, Helen - NWP; Soaterna, Carolina - NWP; Valenzuela, Bobbie - NWP
Cc: Hernandez, Connie - NWP; Ledford, Wayne - NWP; Walker, Mak (Maryann) - NWP; Waldram, Veronica - NWP
Subject: RE: NCR/CAR Check on 26 Miscellaneous Flam Gas Containers

There are no NCR or CAR dispositions that impact the acceptability of these containers, alternate container IDs, and associated BDRs for certification and shipping as listed on the attached. This check was verified independently.

Thanks and Best Regards

Laura R. Jones
Quality Assurance NCR Coordinator
Nuclear Waste Partnership LLC
Contractor for the U.S. Department of Energy
Office: (575) 234-7244
Email: laura.jones@wipp.ws
Fax: (575) 234-7071

INFORMATION ONLY

From: Valenzuela, Bobbie - NWP
Sent: Monday, May 05, 2014 11:36 AM
To: Jones, Laura - NWP; Waldram, Veronica - NWP; Ledford, Wayne - NWP
Cc: Hernandez, Connie - NWP
Subject: NCR/CAR Check on 26 Miscellaneous Flam Gas Containers

Please do an NCR/CAR check on the following 26 Miscellaneous Flam Gas Containers:

10319032	Lot 995
10362842	Lot 992

10498589	Lot 992
10458750	Lot 992
BN10501803	Lot 994
BN10514268	Lot 1043
BN10514269	Lot 1043
BN10514270	Lot 1043
BN10514271	Lot 1043
BN10514274	Lot 1043
BN10514275	Lot 1043
BN10514276	Lot 1043
BN10514514	Lot 1043
BN10514516	Lot 1043
BN10514521	Lot 1043
BN10516727	Lot 1043
BN10516828	Lot 1043
BN10516829	Lot 1043
BN10516830	Lot 1043
BN10516836	Lot 1043
BN10018243	Lot 1044
BN10220597	Lot 1044
10359461	Lot 1044
10235280	Lot 1044
10106829	Lot 1044
10108297	Lot 1044

Thanks,
Bobbie Valenzuela
Central Characterization Project
Nuclear Waste Partnership LLC
Contractor for the U.S. Department of Energy
575-234-7161

AMWTP

Record Transmittal

RECORD
B-2014-0183
SONEIL
05/14/2014

Form-1044, Rev. 8
Effective: 11/26/08

Implementing Document: MP-DOCS-18.2

N/Box Number: B-2014-0183 Submitter: Stormie McCurdy Phone: 557-6394

cord Media: ☐ Paper ☐ CD/DVD ☐ e-mail files sent to:
☒ Electronic files placed in RM Check-In:
\\Amws0025\enterprise\Records Check-in ☐ Other (List)

al Number of Pages or Items (if page 2 is used) Submitted (Required): 60

RECORD INFORMATION

ubmitting multiple records, generate a box number and enter information on Page 2 of this form.

cord Identification No.: Certified Drum Files

scribe Significant Record Information: (include title/description, approval/completion dates etc., that may be needed later retrieval)

Certified Drum File's 10001943 – BN10516877

ould general viewing of this record on the Home Page be restricted? Yes ☐ (DEFAULT, IF NOT CHECKED, IS NO)

cord Category: (Select one , refer to MP-DOCS-18.2, Appendix B)

☒	Lifetime WIPP	Retention Code:	ENV1-j-1
☐	Nonpermanent WIPP	Retention Code:	ENV1-j-1
☐	Facility Operating Record (FOR)/RCRA	Retention Code:	ENV2-a-1-a
☐	Both FOR/NP WIPP	Retention Code:	ENV2-a-1-a
☐	Vital/Emergency Operating Records	Retention Code:	
☐	Misc Other. Record	Retention Code:	

RECORD VALIDATION

his record a QA Record (refer to MP-DOCS-18.2, Appendix A)? ☒ Yes ☐ No IF Yes, Validation is required.

e signature below indicates that the QA record identified above has been reviewed for technical accuracy, legibility, npleteness, corrections made appropriately, and is traceable to the work accomplished and/or applicable/traceable to the n or activity to which the record pertains. If individual records have been previously validated and that validation is indicated stamping, initialing, or signing and dating, then so indicate by writing "SEE RECORDS."

See Records	See Records	See Records
QA Record Validator/Printed Name	Signature	Date

RECORD CUSTODIAN RECEIPT

e signature below indicates that the record identified above has been reviewed for legibility, corrections made appropriately, inistrative check for completeness and is ready for submittal to the RMC (no paper/binder clips, sticky notes, separated n colored paper, etc.)

Stormie McCurdy	Stormie McCurdy	5/13/14
Record Custodian/Printed Name	Signature	Date

RECORD MANAGEMENT CENTER RECEIPT

na below indicates the records have been processed and are available on EDMS

SANDRA ONEIL	Sandra ONeil	5/14/14
RMC Specialist/Printed Name	Signature	Date

AMWTP

Record Transmittal

Form-1044, Rev. 8
Effective: 11/26/08

2014-0183

Implementing Document: MP-DOCS-18.2

******DELETE or DISCARD THIS PAGE IF NOT NEEDED******

cord Identification No:	Record Title/Description	Page Count	Approval/Completion Date of Record
10001943	Certified Drum Files	14	05/01/2014
10001997	Certified Drum Files	14	05/01/2014
10018356	Certified Drum Files	14	05/01/2014
10031287	Certified Drum Files	14	05/01/2014
10041216	Certified Drum Files	14	05/01/2014
10041220	Certified Drum Files	14	05/01/2014
10041916	Certified Drum Files	14	05/01/2014
10041940	Certified Drum Files	14	05/01/2014
10052755	Certified Drum Files	14	05/05/2014
10063174	Certified Drum Files	14	05/01/2014
10084341	Certified Drum Files	14	05/01/2014
10089926	Certified Drum Files	14	05/05/2014
10098674	Certified Drum Files	14	05/01/2014
[redacted]98722	Certified Drum Files	14	05/01/2014
10106829	Certified Drum Files	15	05/06/2014
10120228	Certified Drum Files	14	05/01/2014
10131493	Certified Drum Files	14	05/01/2014
10132007	Certified Drum Files	14	05/01/2014
10145307	Certified Drum Files	14	05/01/2014
10268361	Certified Drum Files	14	05/01/2014
10268432	Certified Drum Files	14	05/01/2014
10268526	Certified Drum Files	14	05/01/2014
10268534	Certified Drum Files	14	05/01/2014
10268545	Certified Drum Files	14	05/01/2014
10350758	Certified Drum Files	14	05/01/2014
10359461	Certified Drum Files	15	05/06/2014
10366684	Certified Drum Files	12	05/01/2014
BN10018243	Certified Drum Files	16	05/06/2014
BN10301780	Certified Drum Files	14	05/05/2014
BN10303895	Certified Drum Files	14	05/05/2014
B[redacted]0305407	Certified Drum Files	14	05/05/2014
BN10308575	Certified Drum Files	14	05/05/2014
BN10308578	Certified Drum Files	14	05/05/2014

2014-0183

Implementing Document: MP-DOCS 18.2

BN10308659	Certified Drum Files	14	05/05/2014
BN10309233	Certified Drum Files	14	05/05/2014
BN10354437	Certified Drum Files	14	05/05/2014
BN10354836	Certified Drum Files	14	05/05/2014
BN10354918	Certified Drum Files	14	05/05/2014
BN10354961	Certified Drum Files	14	05/05/2014
BN10391818	Certified Drum Files	14	05/05/2014
BN10514267	Certified Drum Files	12	05/05/2014
BN10514268	Certified Drum Files	13	05/06/2014
BN10514269	Certified Drum Files	13	05/06/2014
BN10514270	Certified Drum Files	13	05/06/2014
BN10514271	Certified Drum Files	13	05/06/2014
BN10514274	Certified Drum Files	13	05/06/2014
BN10514275	Certified Drum Files	13	05/06/2014
BN1051~~7276~~ 4276	Certified Drum Files	13	05/06/2014
BN10514514	Certified Drum Files	13	05/06/2014
BN10514516	Certified Drum Files	13	05/06/2014
BN10514521	Certified Drum Files	13	05/06/2014
BN10516727	Certified Drum Files	13	05/06/2014
BN10516828	Certified Drum Files	13	05/06/2014
BN10516829	Certified Drum Files	13	05/06/2014
BN10516830	Certified Drum Files	13	05/06/2014
BN10516834	Certified Drum Files	12	05/01/2014
BN10516835	Certified Drum Files	12	05/01/2014
BN10516836	Certified Drum Files	13	05/06/2014
BN10516876	Certified Drum Files	12	05/01/2014
BN10516877	Certified Drum Files	12	05/01/2014

DIVIDER

PAGE

Waste Isolation Pilot Plant
Container Data Report

Report Statistics

Report Version:	**2.3**
WDS Instance:	**prd05.wipp.carlsbad.nm.us**
Generated on:	**October 08, 2014 11:17 AM**
Generated by:	**WINTERBOTTOM, STORMIE**
Total Pages:	**6**

Selection Criteria

Container Number: **10367054**

Container: 10367054
Type: 19 - 55 gal TBO Solid/Vit
Damaged

Current Status
Extended Status: PRESUB CERT
Container Status: PRESUBMITTAL TO CERTIFICATION
Certification Date:
Waste Handling Code: CH
Disposal Date:

Current Location Site: IN
Generator Site: RF
Destination Site ID: WI

Certification Program ID: BN
Shipping Program ID: BN

Neutron Dose Rate (mrem/hr): 0.5
Beta Gamma Dose Rate (mrem/hr): 0.1
Total Dose Rate (mrem/hr): 0.6

FGE (g): 2.279E00
FGE Uncertainty (g): 8.149E-01

Gross Weight (kg): 169.03
Gross Weight Uncert (kg): 0.60

Decay Heat (W): 6.171E-03
Decay Heat Uncertainty (W): 1.631E-03

Certification Data Values

Waste Stream Profile Code: BN222
Waste Type Code: MTRU
IDC Code: 292
Waste Matrix Code: S3150
WAC Revision Number: 7.4
Fill Factor (%): 80.00
Waste Stream BIR ID: IN-BN222
Waste Stream MWIR ID: IN-BN222

TRU Alpha Activity (Ci): 1.991E-01
TRU Alpha Activity Uncertainty (Ci): 5.314E-02
TRU Alpha Activity Concentration (Ci/g): 1.48E-06
PU-239 Equivalent Activity (PE-Ci): 2.037E-01
Alpha Surface Contamination (dpm/cm^2): 19.0
Beta/Gamma Surface Contamination (dpm/cm^2): 199.0

Transportation Data Values

Closure Date:
Vent Date:
Process Knowledge? N

TRUCON Code: ID211M
Shipping Category:
Aspiration Method:

Shipment Purpose: DISPOSAL
Machine Compacted? N
Liner Exists? Y
Liner Hole Size(mm):
Liner Lid Present? N
Layers of Packaging 3
Aqueous Material? Y

Gas Generation Data Values

Measured FGGR (mol/s)	Measured TGRR (mol/s)	Truncated FGGR Test (Y/N)	Truncated FGGR Test Period (days)

Filters

Filter Model Number	Filter Diffusivity (mol/s/ml)	Quantity	Install Date

Container: 10367054
Type: 19 - 55 gal TBO Solid/Vit
Damaged

Current Status

Extended Status: PRESUB CERT
Container Status: PRESUBMITTAL TO CERTIFICATION
Certification Date:

Waste Handling Code: CH
Disposal Date:

PCB Waste?	N
PCB Mass (kg):	
PCB Concentration (ppm):	
PCB Out of Service Date:	
Be Present?	N
Be <= 1% by weight?	Y
Be mass <= 100kg?	Y
Separation OK?	
Packing Fraction (compaction level):	non-compacted

Certification Comments

Radionuclides

Radionuclide	Activity (Ci)	Activity Uncert (Ci)	Mass (g)	Mass Uncert (g)
AM-241	1.990E-02	7.244E-03	5.740E-03	2.089E-03
CS-137	<LLD	<LLD	<LLD	<LLD
NP-237	4.910E-07	6.678E-07	6.880E-04	9.357E-04
PU-238	5.900E-03	3.345E-03	3.410E-04	1.933E-04
PU-239	1.430E-01	5.134E-02	2.270E00	8.149E-01
PU-240	3.030E-02	1.118E-02	1.320E-01	4.871E-02
PU-241	2.600E-01	9.724E-02	2.500E-03	9.350E-04
PU-242	2.150E-06	8.450E-07	5.410E-04	2.126E-04
SR-90	<LLD	<LLD	<LLD	<LLD
U-233	<LLD	<LLD	<LLD	<LLD
U-234	<LLD	<LLD	<LLD	<LLD
U-235	<LLD	<LLD	<LLD	<LLD

Container: 10367054
Type: 19 - 55 gal TBO Solid/Vit Damaged

Current Status
Extended Status: PRESUB CERT
Container Status: PRESUBMITTAL TO CERTIFICATION
Certification Date:
Waste Handling Code: CH
Disposal Date:

Radionuclides

Radionuclide	Activity (Ci)	Activity Uncert (Ci)	Mass (g)	Mass Uncert (g)
U-238	<LLD	<LLD	<LLD	<LLD

Material Parameters

Material Parameter	Description	Weight (kg)
1	IRON BASE METAL ALLOYS	0.34
8	PLASTICS	2.49
9	SOLIDIFIED INORGANIC MATERIAL	131.72
13	STEEL CONTAINER MATERIALS	26.76
14	PLASTIC/LINERS CONTAINER MATERIALS	7.71
	Waste Weight:	134.55
	Packaging Weight:	34.47
	Total Material Weight:	169.02

Hazardous Codes

Hazardous Code	Description
D004	ARSENIC
D005	BARIUM
D006	CADMIUM
D007	CHROMIUM
D008	LEAD
D009	MERCURY
D010	SELENIUM

Container: 10367054
Type: 19 - 55 gal TBO Solid/Vit
Damaged

Current Status
Extended Status: PRESUB CERT
Container Status: PRESUBMITTAL TO CERTIFICATION
Certification Date:
Waste Handling Code: CH
Disposal Date:

Hazardous Codes

Hazardous Code	Description
D011	SILVER
D022	CHLOROFORM
F001	SPENT HALOGENATED SOLVENTS
F002	SPENT HALOGENATED SOLVENTS
F005	SPENT NON-HALOGENATED SOLVENTS
F006	WASTEWATER TREATMENT SLUDGE
F007	SPENT CYANIDE PLATING BATH
F009	SPENT STRIPPING SOLUTION

Assay Methods

Labor Code	Assay Method	Description	Assay Date
BN	9DA2	Z-211-103: CANBERRA DRUM ASSAY	01/02/2011

Non-Destructive Examination (NDE)

Labor Code	NDE Method	Description	Examination Date
BN	9RR2	RTR SYSTEM (Z-213-106)	01/28/2011

Edit Limit Check Results
Evaluation Date: Overall Status:

Evaluation Code	Status	Return Code	Detailed Description

Container: 10367054

Type: 19 - 55 gal TBO Solid/Vit
Damaged

Current Status

Extended Status: PRESUB CERT
Container Status: PRESUBMITTAL TO CERTIFICATION
Certification Date:

Waste Handling Code: CH
Disposal Date:

TRAMPAC Evaluation Results

Evaluation Date:

Overall Status:

Evaluation Code	Status	Return Code	Detailed Description

History

Event Date/Time	Event Description	Reason
10/08/2014 11:13:54	INSERT DATA INTO THE DATABASE	

AMWTP
Advanced Mixed Waste Treatment Project

WDS Certification Data Entry Form

Container ID: 10367054 **WIPP Label:** 10367054

DATA DESCRIPTION	WDS ENTRY
Shipper Site ID	BN
Waste Stream Profile	BN222
WIPP Container Type	19
WAC Revision Number	7.4
Certification Site ID	BN
Waste Handling Code	CH
Waste Stream BIR	IN-BN222
MWIR	IN-BN222
Generator Site ID	RF
IDC	292
Waste Matrix Code	S3150
TRUCON Code	ID211M
TRU Alpha Activity (Ci)	1.99E-01
TRU Alpha Activity Error (Ci)	5.31E-02
TRU Alpha Activity Concentration (nCi/g)	1479.694
TRU Alpha Activity Concentration Error (nCi/g)	395.034
Pu239 Fissile Gram Equivalent (FGE)	2.28E+00
Pu239 Fissile Gram Equivalent Error (FGE)	8.15E-01
Pu239 Equivalent Activity (PE-Ci)	2.04E-01
Decay Heat (W)	6.17E-03
Decay Heat Error (W)	1.63E-03
Layers of Packaging	3
Fill Factor (%)	80
Liner Exists	Y
Liner Hole Diameter (mm)	NA
Liner Lid Present	N
Process Knowledge Exists	N
PCB Concentration (ppm)	NA
PCB Waste	N
PCB Out of Service Date	N/A
PCB Mass	NA
Total Gas Generation Rate (mol/s)	N/A
Hydrogen/Methane Generation Rate (mol/s)	N/A
Gas Generation Test Completion Date	N/A
Gross Weight (kg)	169.03
Gross Weight Error (kg)	.60
Alpha Surface Contamination (dpm/100 cm2)	19
Beta Gamma Surface Contamination (dpm/100cm2)	199
Neutron Dose Rate (mrem/hr)	.50
Beta Gamma Dose Rate (mrem/hr)	.10
Aqueous Material	Y
Machine Compacted	N
1/2" Separation Criteria Met for Compacted Waste	NA

Beryllium Mass <= 100 kg	NA	Beryllium <= 1% by Weight	NA
		Beryllium Present	N

AMWTP
Advanced Mixed Waste Treatment Project

WDS Certification Data Entry Form

Container ID: 10367054 **WIPP Label:** 10367054

RADIONUCLIDES INFORMATION

Radionuclide	Activity (Ci)	Activity Error (Ci)	Mass (g)	Mass Error (g)
PU-238	5.900E-03	3.345E-03	3.410E-04	1.933E-04
PU-239	1.430E-01	5.134E-02	2.270E+00	8.149E-01
PU-240	3.030E-02	1.118E-02	1.320E-01	4.871E-02
PU-241	2.600E-01	9.724E-02	2.500E-03	9.350E-04
PU-242	2.150E-06	8.450E-07	5.410E-04	2.126E-04
AM-241	1.990E-02	7.244E-03	5.740E-03	2.089E-03
NP-237	4.910E-07	6.678E-07	6.880E-04	9.357E-04
U-235	.000E+00	.000E+00	.000E+00	.000E+00
CS-137	.000E+00	.000E+00	.000E+00	.000E+00
U-233	.000E+00	.000E+00	.000E+00	.000E+00
U-238	.000E+00	.000E+00	.000E+00	.000E+00
U-234	.000E+00	.000E+00	.000E+00	.000E+00
SR-90	.000E+00	.000E+00	.000E+00	.000E+00

WASTE MATERIAL PARAMETERS

Waste Material Parameter	Description	Material Weight (Kg)
1	Iron-based Metals/Alloys	.34
2	Aluminum-based Metals/Alloys	.00
3	Other metals	.00
4	Other Inorganic Materials	.00
5	(EXPIRED)	.00
6	Cellulosics	.00
7	Rubber	.00
8	Plastic (Waste Materials)	2.49
9	Inorganic matrix	131.72
10	Organic matrix	.00
11	(EXPIRED)	.00
12	Soils/gravel	.00
13	Steel (packaging materials)	26.76
14	Plastic (packaging materials)	7.71
15	Cellulosics Packaging	.00
16	MLLW Waste	.00
	Total:	169.02

AMWTP
Advanced Mixed Waste Treatment Project

WDS Certification Data Entry Form

Container ID: 10367054 **WIPP Label:** 10367054

ASSAY METHODS

Assay Method	Assay Method Date
9DA2	02-JAN-2011

CHARACTERIZATION METHODS

Characterization Method	Characterization Method Date
9RR2	28-JAN-2011

HAZARDOUS CODES

Hazardous Code(s)								
	D004	D005	D006	D007	D008	D009	D010	D011
	D022	F001	F002	F005	F006	F007	F009	

COMMENTS

Comment Type	WIPP Comment
N/A	N/A

ADDITIONAL CERTIFICATION DATA (not Submitted to WDS)

Requirement	Acceptance Criterion	Compliance
Payload Container meets 7A, Type A requirements based on manufacturers specifications.	Payload Container Weight <= the Manufacturers DOT 7A Certified Weight Limit	Y
Unique Container ID, Radioactive and/or Hazard labels	Container Identification/Labeling	Y
Prohibited Liquids	Prohibited	Y
Sealed Containers	No sealed containers > 4 L	Y
Chemical Compatibility	Chemicals allowed by the TRAMPAC	Y
Residual Liquids containing Polychlorinated Biphenyl	Prohibited	Y
Nonradionuclide Pyrophorics	Prohibited	Y
Explosives, Corrosives and Compressed Gases	Prohibited	Y
Non Mixed Hazardous Waste	Prohibited	Y
Sharp/Heavy items blocked or braced	Necessary to provide puncture protection for payload containers	Y
Confinement Layers	Bags closured by approved methods	Y
RCRA Data	Waste Stream Profile Form Approval Date	29-JAN-2010

AMWTP
Advanced Mixed Waste Treatment Project

WDS Certification Data Entry Form

Container ID: 10367054 **WIPP Label:** 10367054

Container Review Statement

I have reviewed the data for this waste container and it is complete and accurate to the best of my knowledge.

Completed By: _____ (Signature) 10/8/14 (Date)

Container Certification Statement and WDS Data Submittal

I hereby certify that I have reviewed the data for this waste container and that it is complete and accurate to the best of my knowledge. I have determined that it meets the requirements stated in the current revision of the CH-WAC. I understand that this information will be made available to regulatory agencies and that there are significant penalties for submitting false information, including the possibility of fines and imprisonment for knowing violations.

Printed Name Waste Certification Official	Signature	Date

DIVIDER

PAGE

Waste Isolation Pilot Plant
Container Data Report

Report Statistics

Report Version:	**2.3**
WDS Instance:	**prd05.wipp.carlsbad.nm.us**
Generated on:	**October 08, 2014 11:38 AM**
Generated by:	**WINTERBOTTOM, STORMIE**
Total Pages:	**9**

Selection Criteria

Container Number: **BN10528597**

Container: BN10528597
Type: 23 - 100 gal

Current Status
Extended Status: PENDING CERT
Container Status: PENDING CERTIFICATION DATA APPROVAL
Certification Date: 10/08/2014
Waste Handling Code: CH
Disposal Date:

Current Location Site: IN
Generator Site: BN
Destination Site ID: WI

Certification Program ID: BN
Shipping Program ID: BN

Neutron Dose Rate (mrem/hr): 0.1
Beta Gamma Dose Rate (mrem/hr): 0.1
Total Dose Rate (mrem/hr): 0.2

FGE (g): 2.315E00
FGE Uncertainty (g): 2.268E-01

Gross Weight (kg): 333.75
Gross Weight Uncert (kg): 1.34

Decay Heat (W): 1.04E-02
Decay Heat Uncertainty (W): 6.35E-04

Certification Data Values

Waste Stream Profile Code: BN510.3
Waste Type Code: MTRU
IDC Code: 550
Waste Matrix Code: S5490
WAC Revision Number: 7.4
Fill Factor (%): 52.00
Waste Stream BIR ID: IN-BN510.3
Waste Stream MWIR ID: NA

TRU Alpha Activity (Ci): 3.235E-01
TRU Alpha Activity Uncertainty (Ci): 1.977E-02
TRU Alpha Activity Concentration (Ci/g): 1.168E-06
PU-239 Equivalent Activity (PE-Ci): 3.209E-01
Alpha Surface Contamination (dpm/cm^2): 19.0
Beta/Gamma Surface Contamination (dpm/cm^2): 199.0

Transportation Data Values

Closure Date: 09/02/2014
Vent Date: 09/02/2014
Process Knowledge? N

TRUCON Code: ID121CD
Shipping Category: 3003400035
Aspiration Method: N

Shipment Purpose: DISPOSAL
Machine Compacted? Y
Liner Exists? N
Liner Hole Size(mm):
Liner Lid Present?
Layers of Packaging 0
Aqueous Material? N

Gas Generation Data Values

Measured FGGR (mol/s)	Measured TGRR (mol/s)	Truncated FGGR Test (Y/N)	Truncated FGGR Test Period (days)

Filters

Filter Model Number	Filter Diffusivity (mol/s/ml)	Quantity	Install Date
NF19SD	1.85E-05	1	09/02/2014

Container: BN10528597
Type: 23 - 100 gal

Current Status

Extended Status: PENDING CERT
Container Status: PENDING CERTIFICATION DATA APPROVAL
Certification Date: 10/08/2014
Waste Handling Code: CH
Disposal Date:

PCB Waste? N
PCB Mass (kg):
PCB Concentration (ppm):
PCB Out of Service Date:
Be Present? N
Be <= 1% by weight?
Be mass <= 100kg?
Separation OK? Y
Packing Fraction (compaction level): <=70% (partial)

Certification Comments

Radionuclides

Radionuclide	Activity (Ci)	Activity Uncert (Ci)	Mass (g)	Mass Uncert (g)
AM-241	1.087E-01	1.239E-02	3.169E-02	3.613E-03
CS-137	7.200E-06	9.918E-07	8.285E-08	1.141E-08
NP-237	1.139E-05	1.599E-06	1.616E-02	2.268E-03
PU-238	4.916E-02	5.466E-03	2.875E-03	3.196E-04
PU-239	1.396E-01	1.405E-02	2.251E00	2.266E-01
PU-240	2.605E-02	3.172E-03	1.148E-01	1.397E-02
PU-241	9.887E-02	2.783E-02	9.599E-04	2.702E-04
PU-242	2.874E-06	1.161E-06	7.275E-04	2.939E-04
SR-90	7.920E-06	8.463E-06	5.739E-08	6.133E-08
U-233	<LLD	<LLD	<LLD	<LLD
U-234	6.085E-07	3.136E-07	9.782E-05	5.042E-05
U-235	1.965E-07	2.898E-08	9.099E-02	1.342E-02

Container: BN10528597
Type: 23 - 100 gal

Current Status
Extended Status: PENDING CERT
Container Status: PENDING CERTIFICATION DATA APPROVAL
Certification Date: 10/08/2014
Waste Handling Code: CH
Disposal Date:

Radionuclides

Radionuclide	Activity (Ci)	Activity Uncert (Ci)	Mass (g)	Mass Uncert (g)
U-238	<LLD	<LLD	<LLD	<LLD

Samples

Labor Code	Sample ID	Sample Type Code	Sample Type Description	Sample Date	Layer Sampled
C8	BN10528597	HGVO-T	HEADSPACE GAS VOC	09/09/2014	0

Unique Samples

CAS Number	Analyte Description	Concentration (ppm)	Analysis Date	Analysis Method	Reporting Flags
100-41-4	ETHYL BENZENE	5.62	09/09/2014	14HG10	U
107-06-2	1,2-DICHLOROETHANE	5.86	09/09/2014	14HG10	U
108-10-1	METHYL ISOBUTYL KETONE	12.78	09/09/2014	14HG10	U
108-67-8	1,3,5-TRIMETHYLBENZENE	2.46	09/09/2014	14HG10	U
108-88-3	TOLUENE	10.57	09/09/2014	14HG10	U
108-90-7	CHLOROBENZENE	5.62	09/09/2014	14HG10	U
108383/106423	M,P-XYLENE	3.4	09/09/2014	14HG10	U
110-82-7	CYCLOHEXANE	7.3	09/09/2014	14HG10	U
156-59-2	CIS-1,2-DICHLOROETHYLENE	0.65	09/09/2014	14HG10	U
60-29-7	ETHYL ETHER	2.45	09/09/2014	14HG10	U
67-56-1	METHANOL	39.6	09/09/2014	14HG10	U
67-64-1	ACETONE	36.82	09/09/2014	14HG10	U
71-36-3	BUTANOL	4.53	09/09/2014	14HG10	U
71-43-2	BENZENE	1.81	09/09/2014	14HG10	U

Container: BN10528597
Type: 23 - 100 gal

Current Status
Extended Status: PENDING CERT
Container Status: PENDING CERTIFICATION DATA APPROVAL
Certification Date: 10/08/2014
Waste Handling Code: CH
Disposal Date:

Samples

Labor Code	Sample ID	Sample Type Code	Sample Type Description	Sample Date	Layer Sampled
C8	BN10528597	HGVO-T	HEADSPACE GAS VOC	09/09/2014	0

Unique Samples

CAS Number	Analyte Description	Concentration (ppm)	Analysis Date	Analysis Method	Reporting Flags
75-34-3	1,1-DICHLOROETHANE	6.87	09/09/2014	14HG10	U
75-35-4	1,1-DICHLOROETHYLENE	2.78	09/09/2014	14HG10	U
78-93-3	METHYL ETHYL KETONE	21.14	09/09/2014	14HG10	U
95-47-6	O-XYLENE	3.23	09/09/2014	14HG10	U
95-63-6	1,2,4-TRIMETHYLBENZENE	2.46	09/09/2014	14HG10	U

Labor Code	Sample ID	Sample Type Code	Sample Type Description	Sample Date	Layer Sampled
C8	H-BN10528597	HGHM-T	HEADSPACE GAS HYDROGEN AND METHANE	09/09/2014	0

Unique Samples

CAS Number	Analyte Description	Concentration (ppm)	Analysis Date	Analysis Method	Reporting Flags
1333-74-0	HYDROGEN	3223.1	09/09/2014	14HG10	NA
74-82-8	METHANE	90.22	09/09/2014	14HG10	U

Material Parameters

Material Parameter	Description	Weight (kg)
1	IRON BASE METAL ALLOYS	188.59
4	OTHER INORGANIC MATERIALS	2.72

Container: BN10528597
Type: 23 - 100 gal

Current Status

Extended Status: PENDING CERT
Container Status: PENDING CERTIFICATION DATA APPROVAL
Certification Date: 10/08/2014
Waste Handling Code: CH
Disposal Date:

Material Parameters

Material Parameter	Description	Weight (kg)
6	CELLULOSICS	75.69
7	RUBBER	0.70
8	PLASTICS	9.35
13	STEEL CONTAINER MATERIALS	56.70
	Waste Weight:	277.05
	Packaging Weight:	56.70
	Total Material Weight:	333.75

Hazardous Codes

Hazardous Code	Description
D004	ARSENIC
D005	BARIUM
D006	CADMIUM
D007	CHROMIUM
D008	LEAD
D009	MERCURY
D010	SELENIUM
D011	SILVER
D022	CHLOROFORM
D027	1,4-DICHLOROBENZENE
D028	1,2-DICHLOROETHANE
D029	1,1-DICHLOROETHYLENE

Container: BN10528597
Type: 23 - 100 gal

Current Status

Extended Status: PENDING CERT
Container Status: PENDING CERTIFICATION DATA APPROVAL
Certification Date: 10/08/2014
Waste Handling Code: CH
Disposal Date:

Hazardous Codes

Hazardous Code	Description
D030	2,4-DINITROTOLUENE
D032	HEXACHLOROBENZENE
D033	HEXACHLOROBUTADIENE
D034	HEXACHLOROETHANE
D037	PENTACHLOROPHENOL
D043	VINYL CHLORIDE
F001	SPENT HALOGENATED SOLVENTS
F002	SPENT HALOGENATED SOLVENTS
F004	SPENT NONHALOGENATED SOLVENTS
F005	SPENT NON-HALOGENATED SOLVENTS
F006	WASTEWATER TREATMENT SLUDGE
F007	SPENT CYANIDE PLATING BATH
F009	SPENT STRIPPING SOLUTION

Assay Methods

Labor Code	Assay Method	Description	Assay Date
BN	9DA3	Z-390-100: CANBERRA DAS3	09/02/2014
BN	9DA4	Z-390-101: CANBERRA DAS4	09/01/2014

Non-Destructive Examination (NDE)

Labor Code	NDE Method	Description	Examination Date

Container: BN10528597
Type: 23 - 100 gal

Current Status
Extended Status: PENDING CERT
Container Status: PENDING CERTIFICATION DATA APPROVAL
Certification Date: 10/08/2014
Waste Handling Code: CH
Disposal Date:

Non-Destructive Examination (NDE)

Labor Code	NDE Method	Description	Examination Date
BN	9VE7	BN-VEB: BOX LINE VE (REPACK BOXES TO DRUMS)	09/02/2014

Edit Limit Check Results

Evaluation Date: 10/08/2014 11:33:23 Overall Status: PASS

Evaluation Code	Status	Return Code	Detailed Description
DI_CERT_ALL	PASS		
DI_CERT_BE	PASS		
DI_CERT_CERT	PASS		
DI_CERT_CHARZ	PASS		
DI_CERT_ED	PASS		
DI_CERT_EPA	PASS		
DI_CERT_PCB	PASS		
DI_CERT_PERC	PASS		
DI_CERT_TRAMPAC	PASS		
DSA	PASS		
WAC	PASS		
WAP_CERT	PASS		

TRAMPAC Evaluation Results

Evaluation Date: 10/08/2014 11:33:25 Overall Status: PASS

Evaluation Code	Status	Return Code	Detailed Description
CE_ACT	PASS		
CE_ALL	PASS		
CE_ASP	PASS		
CE_DDH	PASS		

Container: BN10528597
Type: 23 - 100 gal

Current Status

Extended Status: PENDING CERT
Container Status: PENDING CERTIFICATION DATA APPROVAL
Certification Date: 10/08/2014
Waste Handling Code: CH
Disposal Date:

TRAMPAC Evaluation Results:

Evaluation Date: 10/08/2014 11:33:25 Overall Status: PASS

Evaluation Code	Status
CE_FGE	PASS
CE_FIL	PASS
CE_GVE	PASS
CE_RDR	PASS
CE_TRU	PASS
CE_WGT	PASS

Details

Matrix Depleted Shipping Category:		Compliance Method:	TCM ANALYTICAL
Decay Heat Limit (w):	0.40541344537815127	FGE Limit (g):	200
FGGR (mol/s):	8.04805428E-8	FGGR Limit (mol/s):	1.4285714285714287E-7
Volume Model:		Required Aspiration Time (days):	
Total Headspace VOCs (ppm):	175.95		
Packaging Configuration:	COMMON_PACKAGING 7	DAC Scenario:	3
Closure Time (days):	0	Minimum Closure Time Applied (days):	53
Sample-Vent Time (days):	7	Min Sample-Vent Time Applied (days):	2
TFGVC in ICL (mol fr):		MLEL (mol fr):	0.05

History

Event Date/Time	Event Description	Reason
09/11/2014 13:45:50	INSERT DATA INTO THE DATABASE	
10/08/2014 11:33:25	SUCCESSFUL SUBMISSION FOR CERT	

AMWTP CH-TRU WASTE CERTIFICATION DOCUMENT

Date: 11-Sep-2014
Time: 13:37

Advanced Mixed Waste Treatment Project

Container ID: BN10528597
Generator Site ID/IDC: BN 550 IDC Description: Supercompacted Debris

Container Type: 23 100-Gallon Drum
WAC Revision: 7.4
Waste Stream Profile Code: BN510.3
TRUCON: ID121CD
Gross Weight (kg): 333.75
Layers of Packaging: 0

WSPF Approval Date: 27-NOV-2013
Waste Matrix Code: S5490
Gross Weight Error (kg): 1.34
Fill Factor (%): 52

Radionuclide Composition

Isotope	Activity (Ci)	Activity Uncertainty (Ci)	Mass (g)	Mass Uncertainty (g)
AM241	1.0870E-01	1.2393E-02	3.1691E-02	3.6133E-03
CS137	7.1999E-06	9.9175E-07	8.2849E-08	1.1413E-08
NP237	1.1390E-05	1.5989E-06	1.6155E-02	2.2679E-03
PU238	4.9156E-02	5.4659E-03	2.8746E-03	3.1965E-04
PU239	1.3955E-01	1.4051E-02	2.2508E+00	2.2662E-01
PU240	2.6050E-02	3.1717E-03	1.1476E-01	1.3972E-02
PU241	9.8868E-02	2.7830E-02	9.5988E-04	2.7020E-04
PU242	2.8737E-06	1.1608E-06	7.2751E-04	2.9387E-04
SR90	7.9199E-06	8.4630E-06	5.7391E-08	6.1327E-08
U233	<LLD	<LLD	<LLD	<LLD
U234	6.0845E-07	3.1364E-07	9.7820E-05	5.0423E-05
U235	1.9655E-07	2.8984E-08	9.0994E-02	1.3418E-02
U238	<LLD	<LLD	<LLD	<LLD

PU239 Fissile Gram Equivalent (FGE): 2.32E+00
Decay Heat (Watts): 1.04E-02
TRU Alpha Activity (Ci): 3.23E-01
TRU Alpha Activity Conc. (nCi/g): 1.17E+03
PU239 Equiv. Activity (PE-Ci): 3.21E-01
Beta/Gamma Dose Rate (mR/hr): 0.10
Neutron Dose Rate (mR/hr): 0.10
Sealed Containers > 4 Liters: No
Prohibited Liquids: No
Pressurized Containers (compressed gases): No
Beryllium Present: No
Beryllium Mass <= 100 kg: NA
Beryllium <= 1 % by Weight: NA
Machine Compacted: Yes

PU239 Fissile Gram Equivalent Error (FGE): 2.27E-01
Decay Heat Error (Watts): 6.35E-04
TRU Alpha Activity Error (Ci): 1.98E-02
TRU Alpha Activity Conc. Error (nCi/g): 7.14E+01
Alpha Contamination (dpm/cm2): 19
Beta/Gamma Contamination (dpm/cm2): 199
Pyrophoric Materials < 1%: Yes
Chemical Compatibility: Yes
Explosives: No
Corrosives: No
Polychlorinated Biphenyl (PCB) Conc (ppm): NA
PCB Waste: No
PCB Mass (kg): NA
PCB out of Service Date: N/A
Aqueous Material: No
1/2" Separation Criteria Met for Compacted Waste: Yes

WIPP Comments

Comment Type	Comment
Hazardous Waste Codes:	*D004, D005, D006, D007, D008, D009, D010, D011, D022, D027, D028, D029, D030, D032, D033, D034, D037, D043, F001, F002, F004, F005, F006, F007, F009*
Container IDs in the Overpack/Puck Drum:	*10528265, 10528362, 10528250, 10528227, 10528269*

AMWTP
Advanced Mixed Waste Treatment Project

AMWTP CH-TRU WASTE CERTIFICATION DOCUMENT

Date: 11-Sep-2014
Time: 13:37

Container ID: BN10528597
Generator Site ID/IDC: BN 550 IDC Description: Supercompacted Debris

Container Review Statement

I have reviewed the data for this waste Container and it is complete and accurate to the best of my Knowledge.

Completed By: STORMIE WINTERBOTTOM / 11-SEP-2014 01:09:07
Signature Date

Container Certification Statement and WDS Data Submittal

I hereby certify that I have reviewed the data for this waste container and that it is complete and accurate to the best of my knowledge. I have determined that it meets the requirements stated in the current revision of the CH-WAC. I understand this information will be made available to regulatory agencies and that there are significant penalties for submitting false information, including the possibility of fines and imprisonment for known violations.

Matthew S Storms / [signature] / 10-8-2014
Printed Name Signature Date

Storms, Matthew

From: Hernandez, Connie - NWP [Connie.Hernandez@wipp.ws]
Sent: Thursday, September 25, 2014 8:31 AM
To: 'joe poirer'; Bagley, Julia; Winterbottom, Stormie; Storms, Matthew; Weyerman, Wade - LANL
Cc: Houghton, Joshua - NWP; Valenzuela, Bobbie - NWP; Pyeatt, Brandye (Wipp); Kirkes, Creta - NWP; Hensley, Lorraine - NWP; Lopez, Dora - NWP; Martin, Ryan - NWP
Subject: CCP Flam Gas Completed Drums Lot 1081

The attached list of drums have gone through the CCP CH TRU Waste FGA Certification and WDS Data Entry process for Flammable Gas Sampling and do not have any open CCP NCR's or CAR's and are ready for submittal to WDS.

BN10528000
BN10528003
BN10528100
BN10528105
BN10528393
BN10528394
BN10528396
BN10528397
BN10528400
BN10528591
BN10528593
BN10528595
BN10528596
BN10528597
BN10528598
BN10528599
BN10528642
BN10528644
BN10528646
BN10528647
BN10528648
BN10528649
BN10528782
BN10528785

BN10528596 has a 10-day ship cat.

Thanks.

Connie Hernandez
Central Characterization Project
Nuclear Waste Partnership (NWP) LLC
Contractor for the U.S. Department of Energy
575-234-7209

connie.hernandez@wipp.ws

C6 - ALL RECORDS ITEMS

OTHER DATA ATTACHED FOR C6-63, 68469

GEN8

AMWTP MANAGEMENT PROCEDURE		
MP-DOCS-18.2, Rev. 17	Issued: 05/31/13	Effective: 06/01/13
Records Management		

Appendix B - Record Categories, Classification, Disposition, and Retention Matrix

Information Only

QA records, as applicable, will be retained to the *disposition authority* (see def.) delineated in this appendix for the duration of the project, or until transferred to the Department of Energy (DOE).

(AMWTP QAPP)(DOE/CBFO-94-1012)

Records relevant to an enforcement action under the Waste Isolation Pilot Plant (WIPP) Hazardous Waste Permit, regardless of assigned disposition, will be maintained until the New Mexico Environment Department (NMED) determines that they are no longer needed for enforcement action.

(DOE/CBFO-94-1012)

NOTE 1: *When a record falls into more than one category and disposition, apply the most stringent classification and disposition.*

NOTE 2: *Lists may not be all inclusive but will provide guidance. Records that are not specifically listed will be analyzed by the Records Management Center (RMC) for appropriate category and classification.*

Record Category and Classification	Quality Assurance Designation / Information	Disposition / Retention Instructions
Lifetime WIPP Records • Field Sampling Data Forms • Field and Laboratory Chain of Custody Forms • Test Facility and Laboratory Batch Data Reports • Waste Stream Characterization Package • Sampling plans • Data Reduction, Validation, and Reporting documentation • Acceptable Knowledge documentation • Waste Stream Profile Form • Characterization Information Summaries (Certified Drum Files) • Data Management System (DMS)/Waste Tracking System (WTS) data • Correspondence related to any of the above.	QA	**ENV1-J-1** When complete, submit to RMC. Retain for **life of the project plus 6 years** or transfer to the WIPP Records Archive Facility at end of project/program. **(DOE/CBFO-94-1012)**

Record Category and Classification	Quality Assurance Designation / Information	Disposition / Retention Instructions
Nonpermanent WIPP Records • Gas canister tags • Methods Performance / Demonstration Program documentation • Sampling Equipment Certifications • Calculations and related Software Change Control (WIPP-related systems) • Analytical raw data • Procurement documentation, including vendor data (WIPP-related) and vendor acceptance test plans • Approved vendor list • WIPP-related procedures (all revs) • Audio/Video recordings (Real-time Radioscopy [RTR], Visual Examination [VE], etc.) • Correspondence related to any of the above.	**QA** Projects shall retain QA records for a minimum of 10 years from the date of record generation. If the site ceases to operate, records shall be transferred before site closure. **(DOE/CBFO-94-1012)** Records, usually in the form of completed forms, contain information specific to owner/operator of hazardous waste sites, which must be recorded, as it becomes available. These records document an activity, product, or service that has a positive or negative impact to the air, water, land, natural resources, vegetation, wildlife, or surrounding population. The generator shall maintain records for time periods equivalent to onsite records retention requirements, but not less than 3 years (or for time periods designated by other regulatory authorities). **(NTS WAC)**	**ENV1-J-1** Submit to RMC for long term storage. Destroy 10 years after submittal or transfer to the WIPP Records Archive Facility at end of project/program.
(Both) Facility Operating Records (FOR) / Nonpermanent WIPP Records • Nonconformance Documentation • QA Assessments and Surveillances • Corrective Action (CA)/Trackwise, Audit, Investigation, DOE Health, Safety, and Security, Office of Enforcement (HSS-OE, and Root Cause Analysis Documentation (includes Occurrence Reporting and Processing System [ORPS]) Fact Findings and Nonconformance Reports (NCRs) • Employee Training/Qualification Records, Classroom, On-the-Job, Testing, Certifications, and Rosters • Quality Assurance Project Plan (QAPjP) (all revisions) • Measuring and Test Equipment (M&TE) calibration, Out of Tolerance, and Deviation reports • Technical implementing procedures (all revs) • Correspondence related to any of the above.		**ENV2-a-1-a** Submit to RMC for long-term storage. Destroy 5 years after **LIFE of FACILITY** or transfer to WIPP Records Archive Facility or DOE Idaho Operations Office (ID) Records Storage Facility, as appropriate, at end of project/program.

Record Category and Classification	Quality Assurance Designation / Information	Disposition / Retention Instructions
Facility Operating Records (FOR) /RCRA • All (transuranic [TRU], mixed low-level waste [MLLW], low-level waste [LLW] Offsite) Waste Receipt & Shipping Records • Department of Transportation (DOT) related records • Standard Waste Box (SWB) Direct Load Packages • RadCon and environment sample and Chain of Custody records • Maintenance/In-Service Inspections and Work Orders • Operating Logs (retained in Electronic Shift Operations Management System [eSOMS]) and Round Sheets • Resource Conservation and Recovery Act (RCRA) inspection records and schedules • Environmental determinations/Hazardous waste determinations • Operational Readiness Review (ORR), Readiness Assessment (RA), Management Self Assessment (MSA), and Start-up Implementation documentation, notification, and objective evidence • Authorization Basis (Documented Safety Analysis [DSA] and permit) implementation documentation/Operational emergency (OE) • Unreviewed Safety Question (USQ) screens/determinations • Engineering documentation (As-Built Drawings, Engineering Design Files (EDFs), Facility Modification Proposal (FMPs), etc.) • Security Visitor Traffic Logs • Completed Emergency/Contingency/Spill Response documentation • All Permit documentation (includes modifications and applications) • Waste minimization documentation, including Shipment/Disposal Records (e.g., used oil) • High-efficiency particulate air (HEPA) filter documentation and reports • Toxic Substance Control Act (TSCA)/polychlorinated biphenyl (PCB) documentation • Material Safety Data Sheets (MSDSs) still in use (vital record) • Correspondence related to any of the above. **Analytical Chemistry Laboratory Facility Operating Records, including** • Facility (Less Than Hazard Category 3 [LTHC3]) radionuclide inventory forms • Facility radionuclide inventory tracking logbook • Facility radionuclide inventory verifications • WMF-TR-14 facility daily round sheets • ACL briefing checklists • Time-sensitive chemical inspections	**QA** Records in the form of completed forms (usually) that contain information specific to owner/operator of hazardous waste sites that must be recorded, as it becomes available. These records document an activity, product, or service that has a positive or negative impact to the air, water, land, natural resources, vegetation, wildlife or surrounding population. **(MP-EC&P-7.17)** The generator shall maintain records for time periods equivalent to onsite records retention requirements, but not less than 3 years (or for time periods designated by other regulatory authorities). **(NTS WAC)**	**ENV2-a-1-a** Submit to RMC for long term storage. Destroy 5 years after **LIFE of FACILITY.**

Record Category and Classification	Quality Assurance Designation / Information	Disposition / Retention Instructions
Vital Records • Emergency plans and procedures (EDMS Documents) • Orders of succession (EDMS Records) • Delegations of authority (EDMS Records) • Corporate payroll, finance, and budget information (Costpoint and Deltek) • Personnel (Human Resources) and Benefits information (Costpoint) • Contracts and agreements (Maximo, EDMS Documents) • Legal and financial rights information • Obligations that impose financial risk (Maximo) • Documentation for electronic systems that manage above records (EDMS Documents)	The record designation is dependent on the actual record. Refer to the other categories and/or Appendix A to determine if a QA record. Vital records are emergency operating records that may be required during and after an emergency or as part of the recovery from a disaster. These records must be available as needed at or in the vicinity of emergency operating centers. Most AMWTP Vital records are within electronic systems as noted. **(DOE Order 243.2)**	Disposition is dependent on the actual record. Refer to one of the other categories for the disposition code and retention instructions.

Record Category and Classification	Quality Assurance Designation / Information	Disposition / Retention Instructions
Misc. Other Records The QA record designation for this entire category is dependent on the actual record. Using Appendix A as a guide, these records may or may not be QA records. * Denotes contractor-owned records.		
Employee/Personnel Files (From initial date of employment to date of separation) (SENSITIVE Vital Records) • Medical (includes fit tests, audio tests, drug screens, etc.) * • Human Resources * • Security • Union Grievance and Arbitration * • Correspondence related to any of the above		**A1-1.1** Cut off at time of separation Destroy 75 years after separation (if Security) or turned over to outgoing contractor during contract transition/project end.
Records that relate to organization, staffing, procedures, and communications • General e-mail correspondence not retained as with other disposition codes • Meeting minutes documenting routine activities • Administrative reports relating to routine, daily business functions, recurring transactions, or activities • Required employee communications, including routing slips and sign-off sheets used by management to communicate important information • Organizational Delegations of Authority (Vital Record) • Office Systems Services Records related to service of telephone, pager, fax, and copy machine • Operations Operator Aids and Aid Log/Index • Timely Orders/Short Term Instructions/Temporary Physical Change Records • MSDS's (No Longer Used) • Checklists used to ensure/document completion of work activities • Correspondence related to any of the above		**A23-1-a** Submit to RMC Destroy 2 years after no longer needed.
Physical Security Records • PSO Monthly Report • Alarm Operability Checklist • Security daily key issue log and Alarm Station Logs • Camera Guides and Passes • Key Receipt, Lost Reports, and Accountability Logs		**A18-1.1-a** Submit to RMC when no longer needed. Destroy 4 years after submittal.

Record Category and Classification	Quality Assurance Designation / Information	Disposition / Retention Instructions
Administrative/non-Operational document case files • Objective evidence demonstrating implementation of management improvement programs with a focus on streamlining operations, providing cost effectiveness, improving customer satisfaction, and continuing improvement of work processes or products, e.g., Six-Sigma or Cost Savings Initiatives, ISMS, ISO14001, Voluntary Protection Program (VPP) • Lessons Learned case files • Training/Course Materials (superseded) • Ergonomic Assessments and Building Ergonomic Walkdowns • Business system change control (excludes software change packages for WIPP-related systems) • Systems/Network Access Requests • Container Movement Forms (internal to the AMWTP) • Pre-and Post-Job Reviews • Tailgate and Required Reading rosters • Drill guides/scenarios (superseded) • Budget records; supplies and office services and equipment requests and receipts; and the use of office space and utilities (Vital Records) • Information used to track organization budget expenditures • Payroll and Time/Attendance records (Vital Record) • Media clearing and sanitizing records • Property Management—managing, tracking, controlling, and excess or sale of government furnished property (capital and noncapital (includes application for licensing and license, equipment history files for utilization of property items, manufacturer's statement of origin, equipment repair estimates, repair orders and billings, inspection reports, and move orders) • Correspondence related to any of the above	**A16-1.2**	Submit to RMC when complete, superseded, or obsolete. Destroy 5 years after submittal.

Record Category and Classification	Quality Assurance Designation / Information	Disposition / Retention Instructions
Analytical Chemistry Laboratory (ACL) Records • Laboratory quality trend reports • Staff signature lists • Analytical M&TE out-of-tolerance notifications • Analytical software QA change/verification documentation • Chemical standard and reagent preparation records • Vendor chemical standard certificates of analysis/certificates of calibration • Instrument calibration and calibration verification data • Instrument quality control data • Control charts for analytical QC parameters • Performance evaluation program reports and data • Raw analytical data • Laboratory copies of analytical test reports • Analytical logbooks • Instrument quality control data • Method performance demonstration data • Analyst performance demonstration data • Sample management/custody/disposition records • Instrument/equipment maintenance records		**ENV5-d** Submit to RMC when complete, superseded, or obsolete. Destroy 10 years after submittal.
• Prime Contracts Information and associated files consisting of negotiated, signed contract(s) with the DOE and their contractors. Related documentation includes, but is not strictly limited to, background records, records depicting work scope, benefits, correspondence, cost/pricing, incentive fee provisions, regulatory compliance policies, and other contractual agreements; modifications; provisions; clauses; articles; and other such correlated documentation, e.g., Records generated by or in behalf of organizations or contractors documenting requests to and responses from DOE resulting in exemptions, waivers, or deviations from the parameters set forth by DOE. • All agreements between the Department and other signatory authorities. Agreements executed by DOE, contractor and the requesting Federal, State, local, tribal, domestic, or private organizations. Agreements stipulate contract length, provisions, articles, clauses, and other related matters. Files include subcontract agreements signed between contractor and subcontractors to perform a specific work scope in support of the larger contract. • Labor Management/Union related records agreements. • Correspondence related to any of the above		**N1-434-95-5-a-1** Submit to RMC when no longer needed. Destroy 10 years after contract termination.
• Non-WIPP related procurement files including contract, statement of work, requisitions, purchase orders, lease, bond, surety records, and related correspondence and papers pertaining to award administration, receipt, receiving acceptance inspection for payment for equipment, services, and acquisition of property **> $100,000 and construction contracts exceeding $2,000,000**. • Finance & Accounting/Travel Authorization Records (Vital) regardless of dollar value		**A3-3-a-1-a** Submit to RMC after final payment, Destroy 6 years and 3 months after final payment.

AMWTP MANAGEMENT PROCEDURE		
MP-DOCS-18.2, Rev. 17	Issued: 05/31/13	Effective: 06/01/13

Records Management

Record Category and Classification	Quality Assurance Designation / Information	Disposition / Retention Instructions
• Non-WIPP related procurement and P-Card files including contract, statement of work, requisitions, purchase orders, lease, bond, surety records, and related correspondence and papers pertaining to award administration, receipt, receiving acceptance inspection for payment for equipment, services, and acquisition of property **< $100,000 and construction contracts below $2,000,000**		**A3-3-a-1-b** Submit to RMC after final payment. Destroy 3 years after final payment.
• Request for proposal (RFP)/Purchase Orders/Subcontract **FOR QUALITY SIGNIFICANT PROCUREMENTS** - Facility/equipment procurement packages exceeding $100,000 and construction exceeding $2,000, 000. Vendor trip reports/review meeting minutes, bid package/abstract evaluation, design review package/comments/resolutions for quality systems, structures, and components		**A18-35-b** Submit to RMC after final payment. Destroy upon permanent removal of item from service or upon permanent termination of items use, unless the document will be applicable to a replacement item.
• Corporate-specific records (not related to DOE Contract Scope of Work) * • Unallowable financial records * • Legal records and litigation files * • Employee Human Resource files • Corporate-specific correspondence *		**Flagged in EDMS** Retain in RMC until contract end; then turn over to the outgoing contractor during transition.

C6-63, 68

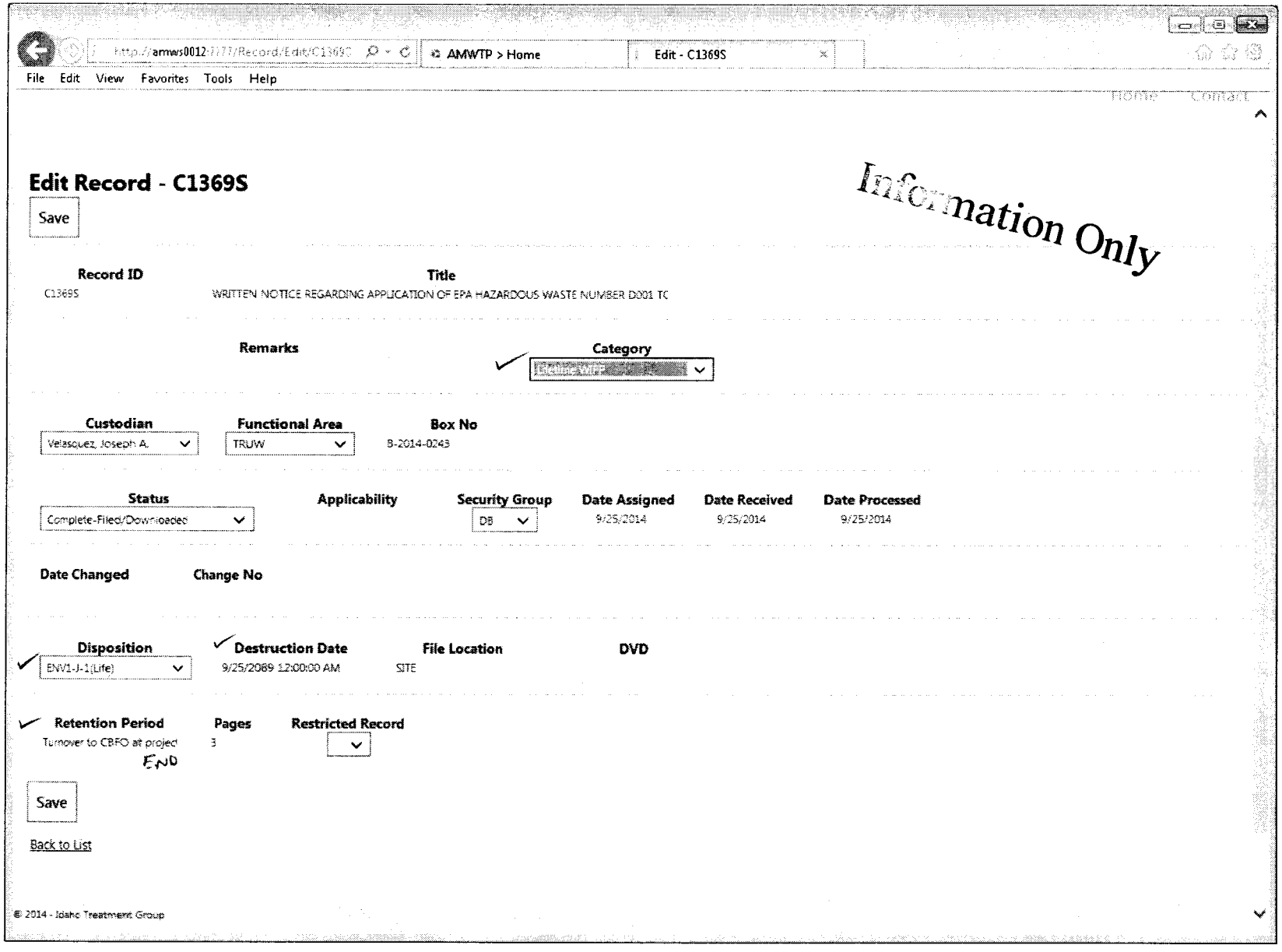
AMWTP > Home
Edit - C1369S
File Edit View Favorites Tools Help
Edit Record - C1369S
Save
Information Only
Record ID
C1369S
Title
WRITTEN NOTICE REGARDING APPLICATION OF EPA HAZARDOUS WASTE NUMBER D001 TC
Remarks
Category
Custodian
Velasquez, Joseph A.
Functional Area
TRUW
Box No
B-2014-0243
Status
Complete-Filed/Downloaded
Applicability
Security Group
DB
Date Assigned
9/25/2014
Date Received
9/25/2014
Date Processed
9/25/2014
Date Changed
Change No
Disposition
ENV1-J-1(Life)
Destruction Date
9/25/2089 12:00:00 AM
File Location
SITE
DVD
Retention Period
Turnover to CBFO at project END
Pages
3
Restricted Record
Save
Back to List
© 2014 - Idaho Treatment Group

C6-69

http://amws0012:7777/Record/Edit/C-2013-00 | Edit - C-2013-0069

File Edit View Favorites Tools Help

Edit Record - C-2013-0069

Information Only

Save

Record ID	Title
C-2013-0069	Transmittal of Central Characterization Project Performance Demonstration Program Revised

Remarks	Category
SMP-03-13	Nonpermanent WIPP

Custodian	Functional Area	Box No
Casper, Shanna K.	TRUW	B-2014-0010

Status	Applicability	Security Group	Date Assigned	Date Received	Date Processed
Complete-Filed/Downloaded		SW	2/25/2013	1/30/2014	1/30/2014

Date Changed	Change No

Disposition	Destruction Date	File Location	DVD
ENV1-J-1(NPW)	1/30/2024 12:00:00 AM	Site	

Retention Period	Pages	Restricted Record
CBFO or destroy at 10 years		

Save

GEN9

AMWTP Advanced Mixed Waste Treatment Project	*Advanced Mixed Waste Treatment Project* *RE-QUALIFICATION PACKAGE* *Real-Time Radiography*	**QPOT3A** **Rev. 12**

Employee Name Roe Thompson S# 103095

REAL-TIME RADIOGRAPHY

Requalification Package Number: QPOT3A

The manager granting qualification acknowledges that the employee possesses the knowledge, skills, and abilities to perform this job function correctly the first time, safely and compliantly.

Qualification granted by:	Jeremy Szabo		05/21/13
Characterization and Storage Manager	Print Name	Signature	Date

Required Attachments: Check box if attached	Written Exam	Remedial Form	Exception Form
	☒	☐ (If used)	☐ (If used)

Form-1268, Production System Access Request, has been submitted for the appropriate WTS role(s) for this individual.	S Stallman		5/22/13
Title	Print Name	Signature	Date

Qual Pack Issued By :	Dave Butler		4-3-13
	Print Name	Signature	Date

Qualification Package Approval Section

Line Manager Approval	C. Stepzinski	Signature on File	8/16/12
	Print Name	Signature	Date

Training Manager Approval	Todd Golberg	Signature on File	08/17/12
	Print Name	Signature	Date

TRAINING DEPT. MAY 22 2013

QC 6/12/13

Initials

AMWTP Advanced Mixed Waste Treatment Project	*Advanced Mixed Waste Treatment Project* *RE-QUALIFICATION PACKAGE* *Real-Time Radiography*	**QPOT3A** **Rev. 12**

Employee Name Roe Thompson S# 103095

Revision History

Revision Number	Affected Pages	Description of Change	Date
1-7	All	No Record	
8	All	Issued to align with current initial qualification.	6/16/08
9	All	Updated format and incorporated evaluation standard.	9/8/09
10	Various	Added Safety Basis Related Items.	5/26/10
11	Various	Replaced language regarding Image Intensifier with Flat Panel detector due to an update to RTR equipment.	6/18/12
12	Various	Revise for DSA/TSR update removing RTR from DSA and TSRs.	8/17/12

Modification Record

Mod Letter	Affected Pages	Description of Change	Management Approval *	Date
12A	5	Delete items 3.1.2 and 3.1.3 due to changes in DSA.	C. Stepzinski (Signature on File)	9/5/12

* Manager signature required for modifications.

AMWTP Advanced Mixed Waste Treatment Project	*Advanced Mixed Waste Treatment Project* *RE-QUALIFICATION PACKAGE* *Real-Time Radiography*	**QPOT3A** **Rev. 12**

Employee Name Boe Thompson S# 103095

Signature Roster

Personnel signing blocks in this qualification package must print their name legibly, sign and initial. Signature by Evaluators indicates they have used the Training/Evaluation Standard and performed evaluations IAW MP-RTQP-14.13. Copy this sheet if necessary.

Name (Printed)	Signature	Initials
Danny Green		
Steve Tallman		
Cameron Stamey		
Aaron Buckski		
C.A. STEPZINSKI		
Jeremy Szabo		

Employee Name Roe Thompson S# 103095

1.0 Scope

This qualification package was developed for the re-qualification of the Real-Time Radiography Operations (QPOT3A) in WMF-634/610 at the AMWTP.

The operator will be qualified for 2 years.

The Technician may be disqualified because of, but not limited to Medical reasons, failing re-qualification exam, job performance deficiency, performs work in an unsafe manner or expiration of qualification

2.0 Prerequisites

Ensure the trainee has successfully completed the requirements listed below before completing this qualification package.

The Employee Position Description (EPD), Form1018 has been reviewed or a new one completed to ensure the duties of this position are included and to verify the education and experience requirements have been satisfied. (MP-RTQP-14.1).

The employees Individual Training Plan (ITP), Form-1020, is current, or has been updated, to include the appropriate RCRA Profile and all courses required for Operations Technicians performing Real-Time Radiography operations.

The ITP also includes the qualification checklists for all applicable equipment that will be used by operators in this job scope.

The employee has completed all initial training *and is current* on the applicable qualifications / checklists listed on the ITP to support this qualification package.

Employee's Production Manager — Date: 05/21/2013

	Date Requirement Was Completed	**Signature** (ISIH or SS)	**Date**
2.1 Current Visual Acuity Exam	01/03/13		05/21/13

Employee Name Roe Thompson S# 103095

3.0 Initial & Continuing Training / Knowledge / Required Reading

The initial training courses identified pertain to the job function/duties and will be verified complete by the employee's SS or a Training Representative.

3.1 Training Courses (Indicate Courses that are Recurring):	Date Requirement was Complete	Recurring Training /Qualification Frequency
3.1.1 0AWT1118, LLW/MLLW Disposition Program (CBT)	02/13/12	24 Months
3.1.2 0AWT 2375, Safety Basis Continuing Training for Non-Facility Ops	N/A	24 Months
3.1.3 0AWT 2369 RTR ANSI Safety Requirements	N/A	24 Months

Mod 12A

Training Representative or SS verify initial training courses are complete:	Signature	AR 05/21/13 ~~05/~~ 05/21/13 Date

Sign-off by the OJT Instructor or SS indicates that each required reading has been reviewed IAW with the Training/Evaluation Standard and that the Trainee demonstrates a satisfactory understanding of how it pertains to their job responsibilities

3.2 Required Reading: Operating Instructions	OJT Instructor / SS Signature	Date
3.2.1 None	NA	NA

3.3 Required Reading: Other Documents	OJT Instructor / SS Signature	Date
3.3.1 None	NA	NA

Employee Name Roe Thompson S# 103095

Sign-off by the OJT Instructor or SS indicates that each knowledge item has been reviewed IAW with the Training/Evaluation Standard and that the Trainee demonstrates a satisfactory understanding of how it pertains to their job responsibilities

3.4 Knowledge:	OJT Instructor / SS Signature	Date
3.4.1 Safety Basis (DSA, TSR, USQ, SER) • ANSI N43.3 Requirements		05/21/13
3.4.2 Criticality Working Requirements (CWRs)	Steve Tall	5/13/13
3.4.3 Applicability, Condition, Action(s) for RTR System and associated surveillance(s)	Steve Tall	5/13/13

4.0 OJT Training Objectives

The elements below are to be performed (P), simulated (S), or discussed (D) as indicated. If there are two or more choices (P, S, or D), then circle which one was used.

Initials by the OJT indicate that the Trainee is ready to be evaluated per MP-RTQP-14.13. Each training objective has been reviewed IAW with the Training/Evaluation Standard and the Trainee has a satisfactory understanding of how it pertains to his/her job responsibilities. It is noted that a successful practice cannot count as a successful OJT evaluation.

Sign-off by the evaluator indicates successful performance of the task. If the trainee cannot perform the task without coaching, terminate the Performance Assessment.

	P S D	Evaluator Signature & date
4.1 Basic Principles		
4.1.1 Inspect RTR for operability.	P (S) D	05/03/13
4.2 Quality Control		
4.2.1 State the requirements and frequency for verifying the image quality through viewing an Image Test pattern.	P S (D)	05/03/13
4.2.2 State the requirements and frequency for performing the independent replicate scan.	P S (D)	05/03/13

Employee Name Roe Thompson S# 103095

4.2.3 State the requirements and frequency for performing the independent observation.	D	05/03/13
4.2.4 Describe the requirements for a batch size.	D	05/03/13
4.2.5 State the requirements for performance of test and training drums and the frequency in which they must be done.	D	05/13/13
4.3 Safety Basis/Technical Safety Requirements		
4.3.1 Discuss the ANSI required safety checks.	D	05/13/13
4.3.2 Perform RTR Daily safety checks (RTR 101/106)	P	05/13/13
4.3.3 Perform RTR semi-annual interlocks surveillance (RTR 101/106)	P S	05/13/13
4.3.4 Verify completion of RTR semi-annual shielding surveillance (RTR 101/106)	P	05/13/13
4.3.5 Perform RTR Daily Safety checks (RTR 1001)	P	05/13/13
4.3.6 Perform RTR semi-annual interlock surveillance (RTR 1001)	P S	05/13/13
4.3.7 Verify completion of RTR semi-annual shielding surveillance (RTR 1001).	P	05/13/13
4.3.8 Simulate or discuss required action(s) upon failure to meet ANSIN43.3 Requirements	S D	05/13/13
4.3.9 Discuss the basic scenario description for the Accidents for RTR.	D	05/13/13
4.3.10 Locate and describe the safety functions of the Safety Components for RTR system 101/106 and 1001.	P	05/13/13

Employee Name Roe Thompson S# 103095

5.0 *Emergency / Abnormal Conditions*

The elements below are to be simulated (S) or discussed (D) as indicated. If both S and D are indicated, then circle which one was used.

Sign-off by the evaluator indicates successful performance of the task. Each training objective has been reviewed IAW with the Training/Evaluation Standard and the Trainee has a satisfactory understanding of how it pertains to his/her job responsibilities. If the trainee cannot perform the task without coaching, terminate the Performance Assessment.

	P S D	Evaluator Signature	Date
5.1 Fire / Alarm (INST-OI-12, INST-OI-26)	S(D)	Steve Todd	5/13/13
5.2 Location of fire extinguishers / fire alarm boxes	S(D)	Steve Todd	5/13/13
5.3 Dropped waste container (INST-OI-11)	S(D)	Steve Todd	5/13/13
5.4 Breached Container (INST-OI-11, INST-OI-84)	S(D)	Steve Todd	5/13/13
5.5 CAM Alarm (INST-OI-11, INST-OI-12)	S(D)	Steve Todd	5/13/13
5.6 Spill / Contamination Release (INST-OI-88, MP-EC&P-7.10)	S(D)	Steve Todd	5/13/13
5.7 Injured Person (0AWT2402, 0AWT2521)	S(D)	Steve Todd	5/13/13
5.8 Loss of ventilation/air system (INST-OI-12, INST-OI-33)	S(D)	Steve Todd	5/13/13
5.9 Loss of Commercial Power (INST-OI-12, INST-OI-26)	S(D)	Steve Todd	5/13/13
5.10 Evacuation (T2402)	S(D)	Steve Todd	5/13/13
5.11 Take Cover (T2402)	S(D)	Steve Todd	5/13/13
5.12 X-ray fails to energize (INST-OI-12)	S(D)	Steve Todd	5/13/13
5.13 X-ray fails to de-energize (INST-OI-12)	S(D)	Steve Todd	5/13/13

AMWTP Advanced Mixed Waste Treatment Project	*Advanced Mixed Waste Treatment Project* *RE-QUALIFICATION PACKAGE* *Real-Time Radiography*	**QPOT3A** **Rev. 12**

Employee Name Roe Thompson S# 103095

6.0 **Examinations** (Sections 1-5 must be complete prior to testing)		
Written Exam (80% required to pass) Exam #: 1 Score: 91% *(If first exam is failed the supervisor must assign remedial training)* Form-1039 attached ☐ (check box when completed form-1039 is attached) Re-exam # N/A Score: N/A (N/A if first exam is passed with 80% or greater)		
Exam Passed	Cameron Slamal Exam Proctor Signature	5-22-13 ~~5-20-13~~ Date 5/22/13

Verify that biannual QAPjP container evaluation has been performed or is current	SVTall RTR SME Signature	5/13/13 Date

7.0 **Recommendation for Qualification**		
After discussion with the candidate concerning this job scope, the Shift Supervisor (SS) acknowledges that the trainee possesses the knowledge, skills, and abilities to perform this job function correctly the first time, safely and compliantly. In addition, the SS has completed the quality validation of this document in accordance with the requirements in MP-DOCS-18.2. (Guidance is given in the Training/Evaluation Standard)		
Characterization SS Title	Signature	05/21/13 Date

Upon satisfactory completion of this qualification package, the Characterization Production Manager may grant Qualification to the trainee on the front cover of this qualification package.

DIVIDER

PAGE

AMWTP Advanced Mixed Waste Treatment Project	*Advanced Mixed Waste Treatment Project* *RE-QUALIFICATION PACKAGE* *Real-Time Radiography*	**QPOT3A** **Rev. 12**

Employee Name Chad Wasylow S# 71479

REAL-TIME RADIOGRAPHY

Requalification Package Number: QPOT3A

The manager granting qualification acknowledges that the employee possesses the knowledge, skills, and abilities to perform this job function correctly the first time, safely and compliantly.

Qualification granted by:	C. A. Stepzinski		09/26/2012
Characterization and Storage Manager	Print Name	Signature	Date

Required Attachments: Check box if attached	Written Exam	Remedial Form (If used)	Exception Form (If used)
	☒	☐	☐

Form-1268, Production System Access Request, has been submitted for the appropriate WTS role(s) for this individual.	Eric Schweinsberg		9/26/12
Title	Print Name	Signature	Date

Qual Pack Issued By :	Cameron Stamps	Cameron Stamps	9-20-12
	Print Name	Signature	Date

TRAINING DEPT
OCT 01 2012

Qualification Package Approval Section

Initials CJ

Line Manager Approval	C. Stepzinski	Signature on File	8/16/12
	Print Name	Signature	Date

Training Manager Approval	Todd Golberg	Signature on File	08/17/12
	Print Name	Signature	Date

OCT 02 AM
QC B

Employee Name Chad Wasylow S# 71479

Revision History

Revision Number	Affected Pages	Description of Change	Date
1-7	All	No Record	
8	All	Issued to align with current initial qualification.	6/16/08
9	All	Updated format and incorporated evaluation standard.	9/8/09
10	Various	Added Safety Basis Related Items.	5/26/10
11	Various	Replaced language regarding Image Intensifier with Flat Panel detector due to an update to RTR equipment.	6/18/12
12	Various	Revise for DSA/TSR update removing RTR from DSA and TSRs.	8/17/12

Modification Record

Mod Letter	Affected Pages	Description of Change	Management Approval *	Date
12A	5	Delete items 3.1.2 and 3.1.3 due to changes in DSA.	C. Stepzinski (Signature on File)	9/5/12

* Manager signature required for modifications.

Employee Name Chad Wasylow S# 71479

Signature Roster

Personnel signing blocks in this qualification package must print their name legibly, sign and initial. Signature by Evaluators indicates they have used the Training/Evaluation Standard and performed evaluations IAW MP-RTQP-14.13. Copy this sheet if necessary.

Name (Printed)	Signature	Initials
Cameron Stamos	Cameron Stamos	CS
SM Peterman	SM Peterman	SMP
B. Warner	B. Warner	BW
Shaun Jordan	Shaun Jordan	SJ
Derek Cox	Derek Cox	DC
Kathy Birch	Kathy Birch	KB
C.A. STEFZINSKI	C.A. STEFZINSKI	CAS

Employee Name Chad Wasylow S# 71479

1.0 Scope

This qualification package was developed for the re-qualification of the Real-Time Radiography Operations (QPOT3A) in WMF-634/610 at the AMWTP.

The operator will be qualified for 2 years.

The Technician may be disqualified because of, but not limited to Medical reasons, failing re-qualification exam, job performance deficiency, performs work in an unsafe manner or expiration of qualification

2.0 Prerequisites

Ensure the trainee has successfully completed the requirements listed below before completing this qualification package.

The Employee Position Description (EPD), Form1018 has been reviewed or a new one completed to ensure the duties of this position are included and to verify the education and experience requirements have been satisfied. (MP-RTQP-14.1).

The employees Individual Training Plan (ITP), Form-1020, is current, or has been updated, to include the appropriate RCRA Profile and all courses required for Operations Technicians performing Real-Time Radiography operations.

The ITP also includes the qualification checklists for all applicable equipment that will be used by operators in this job scope.

The employee has completed all initial training *and is current* on the applicable qualifications / checklists listed on the ITP to support this qualification package.

Employee's Production Manager — Date: 9/20/12

	Date Requirement Was Completed	**Signature** (ISIH or SS)	**Date**
2.1 Current Visual Acuity Exam	01-05-2012	DC SHC	09/20/12

Employee Name Chad Wesselow S# 71479

3.0 Initial & Continuing Training / Knowledge / Required Reading

The initial training courses identified pertain to the job function/duties and will be verified complete by the employee's SS or a Training Representative.

3.1 Training Courses (Indicate Courses that are Recurring):	Date Requirement was Complete	Recurring Training /Qualification Frequency
3.1.1 0AWT1118, LLW/MLLW Disposition Program (CBT)	3-12-12	24 Months
3.1.2 0AWT 2375, Safety Basis Continuing Training for Non-Facility Ops	N/A	24 Months
3.1.3 0AWT 2369 RTR ANSI Safety Requirements 06-25-12	N/A	24 Months

Mod 12A

Training Representative or SS verify initial training courses are complete:	Signature	Date
	Cameron Stanes	9-20-12

Sign-off by the OJT Instructor or SS indicates that each required reading has been reviewed IAW with the Training/Evaluation Standard and that the Trainee demonstrates a satisfactory understanding of how it pertains to their job responsibilities

3.2 Required Reading: Operating Instructions	OJT Instructor / SS Signature	Date
3.2.1 None	NA	NA

3.3 Required Reading: Other Documents	OJT Instructor / SS Signature	Date
3.3.1 None	NA	NA

Employee Name Chad Wrayblow S# 71479

Sign-off by the OJT Instructor or SS indicates that each knowledge item has been reviewed IAW with the Training/Evaluation Standard and that the Trainee demonstrates a satisfactory understanding of how it pertains to their job responsibilities

3.4 Knowledge:	OJT Instructor / SS Signature	Date
3.4.1 Safety Basis (DSA, TSR, USQ, SER) • ANSI N43.3 Requirements	B Wamey	09/20/12
3.4.2 Criticality Working Requirements (CWRs)	B Wamey	09/20/12
3.4.3 Applicability, Condition, Action(s) for RTR System and associated surveillance(s)	B Wamey	09/20/12

4.0 OJT Training Objectives

The elements below are to be performed (P), simulated (S), or discussed (D) as indicated. If there are two or more choices (P, S, or D), then circle which one was used.

Initials by the OJT indicate that the Trainee is ready to be evaluated per MP-RTQP-14.13. Each training objective has been reviewed IAW with the Training/Evaluation Standard and the Trainee has a satisfactory understanding of how it pertains to his/her job responsibilities. It is noted that a successful practice cannot count as a successful OJT evaluation.

Sign-off by the evaluator indicates successful performance of the task. If the trainee cannot perform the task without coaching, terminate the Performance Assessment.

	P S D	Evaluator Signature & date
4.1 Basic Principles		
4.1.1 Inspect RTR for operability.	P (S)	Shawn Jordan 09/25/12
4.2 Quality Control		
4.2.1 State the requirements and frequency for verifying the image quality through viewing an Image Test pattern.	(D)	Shawn Jordan 09/25/12
4.2.2 State the requirements and frequency for performing the independent replicate scan.	(D)	Shawn Jordan 09/25/12

Employee Name Chad Woseylow S# 71479

4.2.3 State the requirements and frequency for performing the independent observation.	D	Shawn Jordan 09/25/12
4.2.4 Describe the requirements for a batch size.	D	Shawn Jordan 09/25/12
4.2.5 State the requirements for performance of test and training drums and the frequency in which they must be done.	D	Shawn Jordan 09/25/12
4.3 Safety Basis/Technical Safety Requirements		
4.3.1 Discuss the ANSI required safety checks.	D	Shawn Jordan 09/26/12
4.3.2 Perform RTR Daily safety checks (RTR 101/106)	P	Shawn Jordan 09/26/12
4.3.3 Perform RTR semi-annual interlocks surveillance (RTR 101/106)	P S	Shawn Jordan 09/26/12
4.3.4 Verify completion of RTR semi-annual shielding surveillance (RTR 101/106)	P	Shawn Jordan 09/26/12
4.3.5 Perform RTR Daily Safety checks (RTR 1001)	P	Shawn Jordan 09/26/12
4.3.6 Perform RTR semi-annual interlock surveillance (RTR 1001)	P S	Shawn Jordan 09/26/12
4.3.7 Verify completion of RTR semi-annual shielding surveillance (RTR 1001).	P	Shawn Jordan 09/26/12
4.3.8 Simulate or discuss required action(s) upon failure to meet ANSIN43.3 Requirements	S D	Shawn Jordan 09/26/12
4.3.9 Discuss the basic scenario description for the Accidents for RTR.	D	Shawn Jordan 09/26/12
4.3.10 Locate and describe the safety functions of the Safety Components for RTR system 101/106 and 1001.	P	Shawn Jordan 09/26/12

Employee Name Chad Wasylow S# 71479

5.0 *Emergency / Abnormal Conditions*

The elements below are to be simulated (S) or discussed (D) as indicated. If both S and D are indicated, then circle which one was used.

Sign-off by the evaluator indicates successful performance of the task. Each training objective has been reviewed IAW with the Training/Evaluation Standard and the Trainee has a satisfactory understanding of how it pertains to his/her job responsibilities. If the trainee cannot perform the task without coaching, terminate the Performance Assessment.

	P S D	Evaluator Signature	Date
5.1 Fire / Alarm (INST-OI-12, INST-OI-26)	S(D)	Shawn Jordan	09/26/12
5.2 Location of fire extinguishers / fire alarm boxes	S(D)	Shawn Jordan	09/26/12
5.3 Dropped waste container (INST-OI-11)	S(D)	Shawn Jordan	09/26/12
5.4 Breached Container (INST-OI-11, INST-OI-84)	S(D)	Shawn Jordan	09/26/12
5.5 CAM Alarm (INST-OI-11, INST-OI-12)	S(D)	Shawn Jordan	09/26/12
5.6 Spill / Contamination Release (INST-OI-88, MP-EC&P-7.10)	S(D)	Shawn Jordan	09/26/12
5.7 Injured Person (0AWT2402, 0AWT2521)	S(D)	Shawn Jordan	09/26/12
5.8 Loss of ventilation/air system (INST-OI-12, INST-OI-33)	S(D)	Shawn Jordan	09/26/12
5.9 Loss of Commercial Power (INST-OI-12, INST-OI-26)	S(D)	Shawn Jordan	09/26/12
5.10 Evacuation (T2402)	S(D)	Shawn Jordan	09/26/12
5.11 Take Cover (T2402)	S(D)	Shawn Jordan	09/26/12
5.12 X-ray fails to energize (INST-OI-12)	S(D)	Shawn Jordan	09/26/12
5.13 X-ray fails to de-energize (INST-OI-12)	S(D)	Shawn Jordan	09/26/12

AMWTP Advanced Mixed Waste Treatment Project	*Advanced Mixed Waste Treatment Project* *RE-QUALIFICATION PACKAGE* *Real-Time Radiography*	QPOT3A Rev. 12

Employee Name Chad Wasglow S# 71479

6.0 **Examinations** (Sections 1-5 must be complete prior to testing)		
Written Exam (80% required to pass) Exam #: 8 Score: 91% *(If first exam is failed the supervisor must assign remedial training)* Form-1039 attached ☐ (check box when completed form-1039 is attached) Re-exam # N/A Score: N/A (N/A if first exam is passed with 80% or greater)		
Exam Passed	Exam Proctor Signature	Date 9/26/12

Verify that biannual QAPjP container evaluation has been performed or is current	RTR SME Signature	Date 9/26/12

7.0 **Recommendation for Qualification**		
After discussion with the candidate concerning this job scope, the Shift Supervisor (SS) acknowledges that the trainee possesses the knowledge, skills, and abilities to perform this job function correctly the first time, safely and compliantly. In addition, the SS has completed the quality validation of this document in accordance with the requirements in MP-DOCS-18.2. (Guidance is given in the Training/Evaluation Standard)		
Characterization SS Title	Signature	09/26/12 Date

Upon satisfactory completion of this qualification package, the Characterization Production Manager may grant Qualification to the trainee on the front cover of this qualification package.

DIVIDER

PAGE

AMWTP Advanced Mixed Waste Treatment Project	*Advanced Mixed Waste Treatment Project* *RE-QUALIFICATION PACKAGE* *Real-Time Radiography*	QPOT3A Rev. 12

Employee Name Denise Lee S# 611645

REAL-TIME RADIOGRAPHY

Requalification Package Number: QPOT3A

The manager granting qualification acknowledges that the employee possesses the knowledge, skills, and abilities to perform this job function correctly the first time, safely and compliantly.

Qualification granted by:	C.A. STEPZINSKI		01/21/2013
Characterization and Storage Manager	Print Name	Signature	Date

Required Attachments: Check box if attached	Written Exam ☑	Remedial Form ☐ (If used)	Exception Form ☐ (If used)

Form-1268, Production System Access Request, has been submitted for the appropriate WTS role(s) for this individual.	S M Peterman		1/21/13
Title	Print Name	Signature	Date

Qual Pack Issued By :	Kathy Merrill	Kathy Merrill TRAINING DEPT.	12-3-12
	Print Name	Signature	Date

JAN 21 2013

Qualification Package Approval Section Initials

Line Manager Approval	C. Stepzinski	Signature on File	8/16/12
	Print Name	Signature	Date

Training Manager Approval	Todd Golberg	Signature on File	08/17/12
	Print Name	Signature	Date

JAN 22 A.M.

QC

Employee Name Denise Lee S# 616645

Revision History

Revision Number	Affected Pages	Description of Change	Date
1-7	All	No Record	
8	All	Issued to align with current initial qualification.	6/16/08
9	All	Updated format and incorporated evaluation standard.	9/8/09
10	Various	Added Safety Basis Related Items.	5/26/10
11	Various	Replaced language regarding Image Intensifier with Flat Panel detector due to an update to RTR equipment.	6/18/12
12	Various	Revise for DSA/TSR update removing RTR from DSA and TSRs.	8/17/12

Modification Record

Mod Letter	Affected Pages	Description of Change	Management Approval *	Date
12A	5	Delete items 3.1.2 and 3.1.3 due to changes in DSA.	C. Stepzinski (Signature on File)	9/5/12

* Manager signature required for modifications.

AMWTP Advanced Mixed Waste Treatment Project	Advanced Mixed Waste Treatment Project RE-QUALIFICATION PACKAGE Real-Time Radiography	QPOT3A Rev. 12

Employee Name Denise Lee S# 611645

Signature Roster
Personnel signing blocks in this qualification package must print their name legibly, sign and initial. Signature by Evaluators indicates they have used the Training/Evaluation Standard and performed evaluations IAW MP-RTQP-14.13. Copy this sheet if necessary.

Name (Printed)	Signature	Initials
Jason Hayne		JH
SM Peterman	SMPeterman	SMP
Seth Oldham	E. Seth Oldham	EOO
Frank Kude	Frank Kude	FK
Kent Keser		KK
LEW FRYE		LF
SAM Phillips		SP
C.A. STEPZINSKI		CAS
RaNae Taylor	RaNae Taylor	RT
Steve Massey	Steve Massey	SM
C.A. STEPZINSKI		CAS
Kathy Wemis	Kathy Wemis	KW

AMWTP Advanced Mixed Waste Treatment Project	*Advanced Mixed Waste Treatment Project* *RE-QUALIFICATION PACKAGE* *Real-Time Radiography*	QPOT3A Rev. 12

Employee Name Denise Lee S# 611645

1.0 **Scope**
This qualification package was developed for the re-qualification of the Real-Time Radiography Operations (QPOT3A) in WMF-634/610 at the AMWTP. The operator will be qualified for 2 years. The Technician may be disqualified because of, but not limited to Medical reasons, failing re-qualification exam, job performance deficiency, performs work in an unsafe manner or expiration of qualification

2.0 **Prerequisites**
Ensure the trainee has successfully completed the requirements listed below before completing this qualification package.
The Employee Position Description (EPD), Form1018 has been reviewed or a new one completed to ensure the duties of this position are included and to verify the education and experience requirements have been satisfied. (MP-RTQP-14.1). The employees Individual Training Plan (ITP), Form-1020, is current, or has been updated, to include the appropriate RCRA Profile and all courses required for Operations Technicians performing Real-Time Radiography operations. The ITP also includes the qualification checklists for all applicable equipment that will be used by operators in this job scope. The employee has completed all initial training *and is current* on the applicable qualifications / checklists listed on the ITP to support this qualification package. Employee's Production Manager — Date: 12/4/12

	Date Requirement Was Completed	**Signature** (ISIH or SS)	**Date**
2.1 Current Visual Acuity Exam	1/3/13		1/3/13

Employee Name Denise Lee S# 661645

3.0 Initial & Continuing Training / Knowledge / Required Reading

The initial training courses identified pertain to the job function/duties and will be verified complete by the employee's SS or a Training Representative.

3.1 Training Courses (Indicate Courses that are Recurring):	Date Requirement was Complete	Recurring Training /Qualification Frequency
3.1.1 0AWT1118, LLW/MLLW Disposition Program (CBT)	2-12-12	24 Months
3.1.2 0AWT 2375, Safety Basis Continuing Training for Non-Facility Ops	N/A	24 Months
3.1.3 0AWT 2369 RTR ANSI Safety Requirements	N/A	24 Months

Mod 12A

Training Representative or SS verify initial training courses are complete:	Signature	Date
	Katty Mercado	1/21/13

Sign-off by the OJT Instructor or SS indicates that each required reading has been reviewed IAW with the Training/Evaluation Standard and that the Trainee demonstrates a satisfactory understanding of how it pertains to their job responsibilities

3.2 Required Reading: Operating Instructions	OJT Instructor / SS Signature	Date
3.2.1 None	NA	NA

3.3 Required Reading: Other Documents	OJT Instructor / SS Signature	Date
3.3.1 None	NA	NA

Employee Name Denise K. Lee S# 61645

Sign-off by the OJT Instructor or SS indicates that each knowledge item has been reviewed IAW with the Training/Evaluation Standard and that the Trainee demonstrates a satisfactory understanding of how it pertains to their job responsibilities

3.4 Knowledge:	OJT Instructor / SS Signature	Date
3.4.1 Safety Basis (DSA, TSR, USQ, SER) • ANSI N43.3 Requirements	C&S MGR	01/04/2013
3.4.2 Criticality Working Requirements (CWRs)		01/03/13
3.4.3 Applicability, Condition, Action(s) for RTR System and associated surveillance(s)		01/03/13

4.0 OJT Training Objectives

The elements below are to be performed (P), simulated (S), or discussed (D) as indicated. If there are two or more choices (P, S, or D), then circle which one was used.

Initials by the OJT indicate that the Trainee is ready to be evaluated per MP-RTQP-14.13. Each training objective has been reviewed IAW with the Training/Evaluation Standard and the Trainee has a satisfactory understanding of how it pertains to his/her job responsibilities. It is noted that a successful practice cannot count as a successful OJT evaluation.

Sign-off by the evaluator indicates successful performance of the task. If the trainee cannot perform the task without coaching, terminate the Performance Assessment.

	P S D	Evaluator Signature & date
4.1 Basic Principles		
4.1.1 Inspect RTR for operability.	(P) S	01/03/13
4.2 Quality Control		
4.2.1 State the requirements and frequency for verifying the image quality through viewing an Image Test pattern.	(D)	01/03/13
4.2.2 State the requirements and frequency for performing the independent replicate scan.	(D)	01/03/13

Employee Name Denise Lee S# 611645

4.2.3 State the requirements and frequency for performing the independent observation.	(D)	Fred K 01/03/13
4.2.4 Describe the requirements for a batch size.	(D)	Fred K 01/03/13
4.2.5 State the requirements for performance of test and training drums and the frequency in which they must be done.	(D)	Fred K 01/03/13
4.3 Safety Basis/Technical Safety Requirements		
4.3.1 Discuss the ANSI required safety checks.	(D)	E. Seth Oldham 01/03/13
4.3.2 Perform RTR Daily safety checks (RTR 101/106)	(P)	E. Seth Oldham 01/04/13
4.3.3 Perform RTR semi-annual interlocks surveillance (RTR 101/106)	P(S)	E. Seth Oldham 01/04/13
4.3.4 Verify completion of RTR semi-annual shielding surveillance (RTR 101/106)	(P)	E. Seth Oldham 01/03/13
4.3.5 Perform RTR Daily Safety checks (RTR 1001)	(P)	Sam McCoy 01/04/13
4.3.6 Perform RTR semi-annual interlock surveillance (RTR 1001)	P(S)	Sam McCoy 01/04/13
4.3.7 Verify completion of RTR semi-annual shielding surveillance (RTR 1001).	(P)	Sam McCoy 01/04/13
4.3.8 Simulate or discuss required action(s) upon failure to meet ANSIN43.3 Requirements	S(D)	E. Seth Oldham 01/03/13
4.3.9 Discuss the basic scenario description for the Accidents for RTR.	(D)	E. Seth Oldham 01/03/13
4.3.10 Locate and describe the safety functions of the Safety Components for RTR system 101/106 and 1001.	(P)	Sam McCoy 01/04/13

AMWTP Advanced Mixed Waste Treatment Project	*Advanced Mixed Waste Treatment Project* *RE-QUALIFICATION PACKAGE* *Real-Time Radiography*	QPOT3A Rev. 12

Employee Name Denise Lee S# 611645

5.0 ***Emergency / Abnormal Conditions***
The elements below are to be simulated (S) or discussed (D) as indicated. If both S and D are indicated, then circle which one was used. Sign-off by the evaluator indicates successful performance of the task. Each training objective has been reviewed IAW with the Training/Evaluation Standard and the Trainee has a satisfactory understanding of how it pertains to his/her job responsibilities. If the trainee cannot perform the task without coaching, terminate the Performance Assessment.

	P S D	Evaluator Signature	Date
5.1 Fire / Alarm (INST-OI-12, INST-OI-26)	S (D)		01/03/13
5.2 Location of fire extinguishers / fire alarm boxes	S (D)		01/03/13
5.3 Dropped waste container (INST-OI-11)	S (D)		01/03/13
5.4 Breached Container (INST-OI-11, INST-OI-84)	S (D)		01/03/13
5.5 CAM Alarm (INST-OI-11, INST-OI-12)	S (D)		01/03/13
5.6 Spill / Contamination Release (INST-OI-88, MP-EC&P-7.10)	S (D)		01/03/13
5.7 Injured Person (0AWT2402, 0AWT2521)	S (D)		01/03/13
5.8 Loss of ventilation/air system (INST-OI-12, INST-OI-33)	S (D)		01/03/13
5.9 Loss of Commercial Power (INST-OI-12, INST-OI-26)	S (D)		01/03/13
5.10 Evacuation (T2402)	S (D)		01/03/13 01/03/13
5.11 Take Cover (T2402)	S (D)		01/03/13
5.12 X-ray fails to energize (INST-OI-12)	S (D)		01/03/13
5.13 X-ray fails to de-energize (INST-OI-12)	S (D)		01/03/13

AMWTP Advanced Mixed Waste Treatment Project	*Advanced Mixed Waste Treatment Project* *RE-QUALIFICATION PACKAGE* *Real-Time Radiography*	**QPOT3A** **Rev. 12**

Employee Name Denise K Lee S# 616645

6.0 **Examinations** (Sections 1-5 must be complete prior to testing)		
Written Exam (80% required to pass) Exam #: 80% Score: 2 *(If first exam is failed the supervisor must assign remedial training)* Form-1039 attached ☐ (check box when completed form-1039 is attached) Re-exam # N/A Score: N/A (N/A if first exam is passed with 80% or greater)		
Exam Passed	RaNae Taylor Exam Proctor Signature	1/21/13 Date

Verify that biannual QAPjP container evaluation has been performed or is current	RTR SME Signature	12/4/12 Date

7.0 **Recommendation for Qualification**		
After discussion with the candidate concerning this job scope, the Shift Supervisor (SS) acknowledges that the trainee possesses the knowledge, skills, and abilities to perform this job function correctly the first time, safely and compliantly. In addition, the SS has completed the quality validation of this document in accordance with the requirements in MP-DOCS-18.2. (Guidance is given in the Training/Evaluation Standard)		
SS Title	WS My Signature	01/21/13 Date

Upon satisfactory completion of this qualification package, the Characterization Production Manager may grant Qualification to the trainee on the front cover of this qualification package.

DIVIDER

PAGE

AMWTP Advanced Mixed Waste Treatment Project	*Advanced Mixed Waste Treatment Project* *REQUALIFICATION CHECKLIST* *Level I Validation Independent Technical Reviewer for RTR*	QCITRRTR Rev 0

Employee Name Boe Thompson S# 103095

Level I Validation Independent Technical Reviewer for RTR

Requalification Checklist #: QCITRRTR

The manager granting qualification acknowledges that the employee possesses the knowledge, skills, and abilities to perform this job function correctly the first time, safely and compliantly.

Qualification granted by: **TRU Programs Mgr.**	George Byram	Gary B	7/28/14
Manager Title	Print Name	Signature	Date

Form-1268, Production System Access Request, has been submitted for the appropriate WTS role(s) for this individual.	S L Tallman	Sue Tall	7/28/14
Title	Print Name	Signature	Date

TRAINING DEPT.
JUL 28 2014
Initials:

Required Attachments: Check box if attached	Written Exam ☐	Remedial Form	Exception Form ☐ (If used)

Qual Pack Issued By :	Amy Betzer	Amy Betzer	7/9/14
	Print Name	Signature	Date

Qualification Checklist Approval Section

Line Manager Approval	Sue Peterman	Signature on File	1/24/12
	Print Name	Signature	Date

Training Manager Approval	Mike Parrish	Signature on File	1/26/12
	Print Name	Signature	Date

AMWTP Advanced Mixed Waste Treatment Project	*Advanced Mixed Waste Treatment Project* *REQUALIFICATION CHECKLIST* *Level I Validation Independent Technical Reviewer for RTR*	QCITRRTR Rev 0

Employee Name Roe Thompson S# 103095

Revision History

Revision Number	Affected Pages	Description of Change	Date
0	All	The ITR qualification was previously contained in one checklist (QPITR3A) which incorporated ITR duties for VE, Solid Sampling/Coring, and RTR batch validation. Those ITR duties have now been split into three separate checklists for each ITR area. This checklist applies to ITR RTR activities.	1/26/12

Modification Record

Mod Letter	Affected Pages	Description of Change	Management Approval *	Date
0A	8	Items 5.5 and 5.6: Change reference to procedure to MP-EP&C-12.16	S. Peterman (Signature on File)	5/3/12

* Manager signature required for modifications.

AMWTP Advanced Mixed Waste Treatment Project	*Advanced Mixed Waste Treatment Project* *REQUALIFICATION CHECKLIST* *Level I Validation Independent Technical Reviewer for RTR*	**QCITRRTR** **Rev 0**

Employee Name Roe Thompson S# 103095

Signature Roster

Personnel signing blocks in this requalification checklist must print their name legibly, sign and initial. Signature by Evaluators indicates they have used the Training/Evaluation Standard and performed evaluations IAW MP-RTQP-14.13. Copy this sheet if necessary.

Name (Printed)	Signature	Initials
Amy Batzer	Amy Batzer	AB
Steve Tallman	Steve Tallman	ST
George Byram	George Byram	GB

1.0 Scope

This requalification checklist is developed to provide assurance that an individual performing Level I Validation of RTR batch data in accordance with the requirements of MP-TRUW-8.2, Quality Assurance Project Plan, is qualified to perform the tasks associated with that function. This requalification is used for personnel performing ITR-RTR activities associated with these batches at AMWTP and who are currently qualified in the prerequisite qualifications listed below. This requalification document provides the candidate with a comprehensive foundation in the knowledge and skills required for compliant task performance. This qualification expires 24 months from the grant date.

Maintaining this qualification requires the individual to maintain current qualification in QPOT03A0 (Real Time Radiography). Recurring training must be completed prior to expiration.

Extended absences, identified training expires, failure of recurring proficiency/performance exams, performance deficiencies, etc. may result in disqualification of the individual until any or all conditions are remediated.

AMWTP Advanced Mixed Waste Treatment Project	*Advanced Mixed Waste Treatment Project* *REQUALIFICATION CHECKLIST* *Level I Validation Independent Technical Reviewer for RTR*	**QCITRRTR** **Rev 0**

Employee Name Roe Thompson S# 103095

2.0 Prerequisites

Ensure the trainee has successfully completed the requirements listed below before completing this qualification checklist.

The Employee Position Description (EPD), Form-1018 has been reviewed or a new one completed to ensure the duties of this position are included and to verify the education and experience requirements have been satisfied. (MP-RTQP-14.1).

The employees Individual Training Plan (ITP), Form-1020, is current, or has been updated, to include the appropriate RCRA Profile and all general courses required for individuals performing Level I Validation activities.

The ITP also includes the qualification checklists for all applicable equipment that will be used by operators in this job scope.

The employee has completed all initial training *and is current* on the applicable qualifications / checklists listed on the ITP to support this qualification package.

Geary Byrne — Employee's Production Manager — 7/28/14 — Date

		Date Requirement Was Completed	**Signature** (Training Specialist or Level I Validation Lead)	**Date**
2.1	QPOT03A, Real Time Radiography (Current)	5/21/13	Amy Betts	7/9/14
2.2	QCITRRTR, Level I Validation Independent Technical Reviewer for RTR OR QPITR3A, Level I Validation	8/7/12	Amy Betts	7/9/14

Employee Name Boe Thompson S# 103095

3.0 Initial & Continuing Training / Knowledge / Required Reading

The initial training courses identified pertain to the job function/duties and will be verified complete by the ITR Lead or a Training Representative.

3.1 Training Courses (Indicate Courses that are Recurring):	Date Requirement was Complete	Recurring Training /Qualification Frequency
3.1.1 0AWT1118, LLW/MLLW Disposition Program	2/17/14	24 months
Training representative or ITR Lead verify initial training courses are complete:	Amy Patton Signature	7/9/14 Date

Sign-off by the ITR Lead indicates that each required reading has been reviewed IAW with the Training/Evaluation Standard and that the Trainee demonstrates a satisfactory understanding of how it pertains to their job responsibilities

3.2 Required Reading: Operating Instructions	ITR Lead Signature	Date
3.2.1 None	N/A	N/A

3.3 Required Reading: Other Documents	ITR Lead Signature	Date
3.3.1 None	N/A	N/A

AMWTP Advanced Mixed Waste Treatment Project	*Advanced Mixed Waste Treatment Project* *REQUALIFICATION CHECKLIST* *Level I Validation Independent Technical Reviewer for RTR*	**QCITRRTR** **Rev 0**

Employee Name Roe Thompson S# 103095

Sign-off by the Level I Validation Lead indicates that each knowledge item has been reviewed IAW with the Training/Evaluation Standard and that the Trainee demonstrates a satisfactory understanding of how it pertains to their job responsibilities.

3.4 Knowledge:	ITR Lead Signature or as indicated	Date
3.4.1 Discuss any recent changes to the WTS System and how it applies to tasks covered in this qualification checklist.	Steve Tall	7/16/14
3.4.2 Discuss any lessons learned regarding Level I Validation activities that have occurred within the past 24 months. Lessons Learned Discussed: WTS changes OTO/Replicate rework issues liquid estimations processing of NCRs	Steve Tall	7/16/14

Employee Name Roe Thompson S# 103095

4.0 OJT Training Objectives

The elements below are to be performed (P), simulated (S), or discussed (D) as indicated. If there are two or more choices (P, S, or D), then circle which one was used.

Sign-off by the ITR Lead indicates successful performance of the task. If the trainee cannot perform the task without coaching, terminate the Performance Assessment.

		P S D	ITR OJT or TRU Programs Mgr. Signature & date
4.1	**RTR- ITR Over-Train Tasks**		
4.1.1	Demonstrate how to include or reference NCRs in the BDR as appropriate and how to ensure that WTS is flagged	P	Stve Tall 7/16/14
4.1.2	Demonstrate how to generate NCRs and notify Head Space Gas Sampling Chemists and ensure WTS is flagged as appropriate if rework has been identified that changes the liner puncture status.	S	Stve Tall 7/16/14
4.1.3	Demonstrate how to document the presence or absence of prohibited items.	P S	Stve Tall 7/16/14
4.1.4	Demonstrate how to generate and document an NCR in WTS when prohibited items have been identified and demonstrate how to flag the NCR in WTS.	P S	Stve Tall 7/16/14

Employee Name Roe Thompson S# 103093

5.0 **Emergency / Abnormal Conditions**
The elements below are to be simulated (S) or discussed (D) as indicated. If both S and D are indicated, then circle which one was used. Sign-off by the evaluator indicates successful performance of the task. If the trainee cannot perform the task without coaching, terminate the Performance Assessment.

		S D	ITR OJT or TRU Programs Mgr. Signature	Date
5.1	Fire / Alarm	S (D)	Steve Tall	7/16/14
5.2	Location of fire extinguishers / fire alarm boxes	S (D)	Steve Tall	7/16/14
5.3	Spill / Contamination Release (MP-EC&P-7.10)	S (D)	Steve Tall	7/16/14
5.4	Injured Person	S (D)	Steve Tall	7/16/14
5.5	Evacuation (MP-EP&C-12.~~7~~16) Mod. 0A	S (D)	Steve Tall	7/16/14
5.6	Take Cover (MP-EP&C-12.~~7~~16) Mod. 0A	S (D)	Steve Tall	7/16/14

AMWTP Advanced Mixed Waste Treatment Project	*Advanced Mixed Waste Treatment Project* *REQUALIFICATION CHECKLIST* *Level I Validation Independent Technical Reviewer for RTR*	**QCITRRTR** **Rev 0**

Employee Name Roe Thompson S# 103095

6.0 **Examinations** (Sections 1-5 must be complete prior to testing)

Written Exam (80% required to pass)

Exam #: 1 Score: 95%

(If first exam is failed the supervisor must assign remedial training)

Form-1039 attached ☐ (check box when completed form-1039 is attached. Not required if first exam is passed.)

Re-exam # N/A Score: N/A (N/A if first exam is passed with 80% or greater)

Exam Passed	[signature]	7/24/14
	Exam Proctor Signature	Date

7.0 **Recommendation for Qualification**

After discussion with the candidate concerning this job scope, the ITR Lead or TRU Programs Mgr. acknowledges that the trainee possesses the knowledge, skills, and abilities to perform this job function correctly the first time, safely and compliantly.

In addition, the ITR Lead or TRU Programs Mgr. has completed the quality validation of this document in accordance with the requirements in MP-DOCS-18.2. (Guidance is given in the Training/Evaluation Standard)

ITR Lead or TRU Programs Mgr.	[signature]	7/16/14
Title	Signature	Date

Upon satisfactory completion of this requalification checklist, the TRU Programs Manager may grant Qualification to the trainee on the front cover of this qualification checklist.

DIVIDER

PAGE

AMWTP Advanced Mixed Waste Treatment Project	Advanced Mixed Waste Treatment Project REQUALIFICATION CHECKLIST Level I Validation Independent Technical Reviewer for RTR	QCITRRTR Rev 0

Employee Name Chad Wasylow S# 71479

Level I Validation Independent Technical Reviewer for RTR

Requalification Checklist #: QCITRRTR

The manager granting qualification acknowledges that the employee possesses the knowledge, skills, and abilities to perform this job function correctly the first time, safely and compliantly.

Qualification granted by:			
TRU Programs Mgr.	George Byram	George R	3/12/14
Manager Title	Print Name	Signature	Date

Form-1268, Production System Access Request, has been submitted for the appropriate WTS role(s) for this individual.			
Title	Chad Wasylow Print Name	Chad Wasylow Signature	03-12-14 Date

Required Attachments: Check box if attached	Written Exam ☒	Remedial Form ☐	Exception Form ☐ (If used)

Qual Pack Issued By :	Dave Butler Print Name	Dave Butler Signature	1/6/14 Date

Qualification Checklist Approval Section

Line Manager Approval	Sue Peterman Print Name	Signature on File Signature	1/24/12 Date

Training Manager Approval	Mike Parrish Print Name	Signature on File Signature	1/26/12 Date

TRAINING DEPT.
MAR 12 2014
Initials: JB

DC JB 3-13-14

AMWTP Advanced Mixed Waste Treatment Project	*Advanced Mixed Waste Treatment Project* *REQUALIFICATION CHECKLIST* *Level I Validation Independent Technical Reviewer for RTR*	QCITRRTR Rev 0

Employee Name Chad Wasylow S# 71479

Revision History			
Revision Number	Affected Pages	Description of Change	Date
0	All	The ITR qualification was previously contained in one checklist (QPITR3A) which incorporated ITR duties for VE, Solid Sampling/Coring, and RTR batch validation. Those ITR duties have now been split into three separate checklists for each ITR area. This checklist applies to ITR RTR activities.	1/26/12

Modification Record				
Mod Letter	Affected Pages	Description of Change	Management Approval *	Date
0A	8	Items 5.5 and 5.6: Change reference to procedure to MP-EP&C-12.16	S. Peterman (Signature on File)	5/3/12

* Manager signature required for modifications.

AMWTP Advanced Mixed Waste Treatment Project	*Advanced Mixed Waste Treatment Project* *REQUALIFICATION CHECKLIST* *Level I Validation Independent Technical Reviewer for RTR*	QCITRRTR Rev 0

Employee Name Chad Wasylow S# 71479

Signature Roster
Personnel signing blocks in this requalification checklist must print their name legibly, sign and initial. Signature by Evaluators indicates they have used the Training/Evaluation Standard and performed evaluations IAW MP-RTQP-14.13. Copy this sheet if necessary.

Name (Printed)	Signature	Initials
Dave Bother	Dave Bother	DB
Greg Byram	Greg Byram	GB
Ron Grise	Ron Grise	RG
Steve Tallman	Steve Tallman	SCT
Amy Betzer	Amy Betzer	AB

1.0 Scope

This requalification checklist is developed to provide assurance that an individual performing Level I Validation of RTR batch data in accordance with the requirements of MP-TRUW-8.2, Quality Assurance Project Plan, is qualified to perform the tasks associated with that function. This requalification is used for personnel performing ITR-RTR activities associated with these batches at AMWTP and who are currently qualified in the prerequisite qualifications listed below. This requalification document provides the candidate with a comprehensive foundation in the knowledge and skills required for compliant task performance. This qualification expires 24 months from the grant date.

Maintaining this qualification requires the individual to maintain current qualification in QPOT03A0 (Real Time Radiography). Recurring training must be completed prior to expiration.

Extended absences, identified training expires, failure of recurring proficiency/performance exams, performance deficiencies, etc. may result in disqualification of the individual until any or all conditions are remediated.

AMWTP Advanced Mixed Waste Treatment Project	*Advanced Mixed Waste Treatment Project* *REQUALIFICATION CHECKLIST* *Level I Validation Independent Technical Reviewer for RTR*	QCITRRTR Rev 0

Employee Name Chad Wasylow S# 71479

2.0 Prerequisites

Ensure the trainee has successfully completed the requirements listed below before completing this qualification checklist.

The Employee Position Description (EPD), Form-1018 has been reviewed or a new one completed to ensure the duties of this position are included and to verify the education and experience requirements have been satisfied. (MP-RTQP-14.1).

The employees Individual Training Plan (ITP), Form-1020, is current, or has been updated, to include the appropriate RCRA Profile and all general courses required for individuals performing Level I Validation activities.

The ITP also includes the qualification checklists for all applicable equipment that will be used by operators in this job scope.

The employee has completed all initial training *and is current* on the applicable qualifications / checklists listed on the ITP to support this qualification package.

George Bl — Employee's Production Manager — 2/18/14 Date

		Date Requirement Was Completed	**Signature** (Training Specialist or Level I Validation Lead)	**Date**
2.1	QPOT03A, Real Time Radiography (Current)	9-26-12	Dave Bell	1-6-14
2.2	QCITRRTR, Level I Validation Independent Technical Reviewer for RTR OR QPITR3A, Level I Validation	3-26-12	Dave Bell	1-6-14

Employee Name Chad Wasylow S# 71479

3.0 Initial & Continuing Training / Knowledge / Required Reading

The initial training courses identified pertain to the job function/duties and will be verified complete by the ITR Lead or a Training Representative.

3.1 Training Courses (Indicate Courses that are Recurring):	Date Requirement was Complete	Recurring Training /Qualification Frequency
3.1.1 0AWT1118, LLW/MLLW Disposition Program	3-12-12	24 months
Training representative or ITR Lead verify initial training courses are complete:	Signature	1-6-14 Date

Sign-off by the ITR Lead indicates that each required reading has been reviewed IAW with the Training/Evaluation Standard and that the Trainee demonstrates a satisfactory understanding of how it pertains to their job responsibilities

3.2 Required Reading: Operating Instructions	ITR Lead Signature	Date
3.2.1 None	N/A	N/A

3.3 Required Reading: Other Documents	ITR Lead Signature	Date
3.3.1 None	N/A	N/A

AMWTP Advanced Mixed Waste Treatment Project	*Advanced Mixed Waste Treatment Project* *REQUALIFICATION CHECKLIST* *Level I Validation Independent Technical Reviewer for RTR*	QCITRRTR Rev 0

Employee Name Chad Wasylow S# 71479

Sign-off by the Level I Validation Lead indicates that each knowledge item has been reviewed IAW with the Training/Evaluation Standard and that the Trainee demonstrates a satisfactory understanding of how it pertains to their job responsibilities.

3.4 Knowledge:	ITR Lead Signature or as indicated	Date
3.4.1 Discuss any recent changes to the WTS System and how it applies to tasks covered in this qualification checklist.	Steve Tall	3/12/14
3.4.2 Discuss any lessons learned regarding Level I Validation activities that have occurred within the past 24 months. Lessons Learned Discussed: missed prohibited items liquid estimations PMR changes	Steve Tall	3/12/14

AMWTP Advanced Mixed Waste Treatment Project	*Advanced Mixed Waste Treatment Project* *REQUALIFICATION CHECKLIST* *Level I Validation Independent Technical Reviewer for RTR*	**QCITRRTR** **Rev 0**

Employee Name Chad Wasylow S# 71479

4.0 OJT Training Objectives

The elements below are to be performed (P), simulated (S), or discussed (D) as indicated. If there are two or more choices (P, S, or D), then circle which one was used.

Sign-off by the ITR Lead indicates successful performance of the task. If the trainee cannot perform the task without coaching, terminate the Performance Assessment.

		P S D	ITR OJT or TRU Programs Mgr. Signature & date
4.1	**RTR- ITR Over-Train Tasks**		
4.1.1	Demonstrate how to include or reference NCRs in the BDR as appropriate and how to ensure that WTS is flagged	P	Steve Tall 3/12/14
4.1.2	Demonstrate how to generate NCRs and notify Head Space Gas Sampling Chemists and ensure WTS is flagged as appropriate if rework has been identified that changes the liner puncture status.	S	Steve Tall 3/12/14
4.1.3	Demonstrate how to document the presence or absence of prohibited items.	P (S)	Steve Tall 3/12/14
4.1.4	Demonstrate how to generate and document an NCR in WTS when prohibited items have been identified and demonstrate how to flag the NCR in WTS.	P (S)	Steve Tall 3/12/14

AMWTP Advanced Mixed Waste Treatment Project	*Advanced Mixed Waste Treatment Project* *REQUALIFICATION CHECKLIST* *Level I Validation Independent Technical Reviewer for RTR*	**QCITRRTR** **Rev 0**

Employee Name Chad Wasylow S# 71479

5.0 *Emergency / Abnormal Conditions*

The elements below are to be simulated (S) or discussed (D) as indicated. If both S and D are indicated, then circle which one was used.

Sign-off by the evaluator indicates successful performance of the task. If the trainee cannot perform the task without coaching, terminate the Performance Assessment.

		S D	ITR OJT or TRU Programs Mgr. Signature	Date
5.1	Fire / Alarm	S (D)	Ron A.	3-11-14
5.2	Location of fire extinguishers / fire alarm boxes	S (D)	Ron A.	3-11-14
5.3	Spill / Contamination Release (MP-EC&P-7.10)	S (D)	Ron A.	3-11-14
5.4	Injured Person	S (D)	Ron A.	3-11-14
5.5	Evacuation (MP-EP&C-12.716) Mod. 0A	S (D)	Ron A.	3-11-14
5.6	Take Cover (MP-EP&C-12.716) Mod. 0A	S (D)	Ron A.	3-11-14

AMWTP Advanced Mixed Waste Treatment Project	*Advanced Mixed Waste Treatment Project* *REQUALIFICATION CHECKLIST* *Level I Validation Independent Technical Reviewer for RTR*	**QCITRRTR** **Rev 0**

Employee Name Chad Wasylow S# 71479

6.0 Examinations (Sections 1-5 must be complete prior to testing)

Written Exam (80% required to pass)

Exam #: 1 Score: 100%

(If first exam is failed the supervisor must assign remedial training)

Form-1039 attached ☐ (check box when completed form-1039 is attached. Not required if first exam is passed.)

Re-exam # _____ Score:_____ (N/A if first exam is passed with 80% or greater)

Exam Passed	Amy Bates	3/12/14
	Exam Proctor Signature	Date

7.0 Recommendation for Qualification

After discussion with the candidate concerning this job scope, the ITR Lead or TRU Programs Mgr. acknowledges that the trainee possesses the knowledge, skills, and abilities to perform this job function correctly the first time, safely and compliantly.

In addition, the ITR Lead or TRU Programs Mgr. has completed the quality validation of this document in accordance with the requirements in MP-DOCS-18.2. (Guidance is given in the Training/Evaluation Standard)

ITR Lead or TRU Programs Mgr.	Steve Tall	3/12/14
Title	Signature	Date

Upon satisfactory completion of this requalification checklist, the TRU Programs Manager may grant Qualification to the trainee on the front cover of this qualification checklist.

DIVIDER

PAGE

AMWTP	Advanced Mixed Waste Treatment Project REQUALIFICATION CHECKLIST Level I Validation Independent Technical Reviewer for RTR	QCITRRTR Rev 0

Employee Name Denise Lee S# 60114

Level I Validation Independent Technical Reviewer for RTR

Requalification Checklist #: QCITRRTR

The manager granting qualification acknowledges that the employee possesses the knowledge, skills, and abilities to perform this job function correctly the first time, safely and compliantly.

Qualification granted by: **TRU Programs Mgr.** Manager Title	George Byram Print Name	George B Signature	3/11/14 Date

Form-1268, Production System Access Request, has been submitted for the appropriate WTS role(s) for this individual. Title	Denise K. Lee Print Name	Denise K Lee Signature	3/11/14 Date

Required Attachments: Check box if attached	Written Exam ☒	Remedial Form ☐	Exception Form ☐ (If used)

Qual Pack Issued By :	Amy Beto Print Name	Amy Beto Signature	2/25/14 Date

TRAINING DEPT.
MAR 11 2014

Qualification Checklist Approval Section Initials: AB

Line Manager Approval	Sue Peterman Print Name	Signature on File Signature	1/24/12 Date

Training Manager Approval	Mike Parrish Print Name	Signature on File Signature	1/26/12 Date

AMWTP Advanced Mixed Waste Treatment Project	*Advanced Mixed Waste Treatment Project* *REQUALIFICATION CHECKLIST* *Level I Validation Independent Technical Reviewer for RTR*	**QCITRRTR** **Rev 0**

Employee Name Denise Lee S# 611645

Revision History

Revision Number	Affected Pages	Description of Change	Date
0	All	The ITR qualification was previously contained in one checklist (QPITR3A) which incorporated ITR duties for VE, Solid Sampling/Coring, and RTR batch validation. Those ITR duties have now been split into three separate checklists for each ITR area. This checklist applies to ITR RTR activities.	1/26/12

Modification Record

Mod Letter	Affected Pages	Description of Change	Management Approval *	Date
0A	8	Items 5.5 and 5.6: Change reference to procedure to MP-EP&C-12.16	S. Peterman (Signature on File)	5/3/12

* Manager signature required for modifications.

AMWTP Advanced Mixed Waste Treatment Project	*Advanced Mixed Waste Treatment Project* *REQUALIFICATION CHECKLIST* *Level I Validation Independent Technical Reviewer for RTR*	**QCITRRTR** **Rev 0**

Employee Name Denise Lee S# 01645

Signature Roster
Personnel signing blocks in this requalification checklist must print their name legibly, sign and initial. Signature by Evaluators indicates they have used the Training/Evaluation Standard and performed evaluations IAW MP-RTQP-14.13. Copy this sheet if necessary.

Name (Printed)	Signature	Initials
Amy Betzer	Amy Betzer	AB
George Byram	George Byram	GB
Steve Tallman	Steve Tallman	ST

1.0 Scope

This requalification checklist is developed to provide assurance that an individual performing Level I Validation of RTR batch data in accordance with the requirements of MP-TRUW-8.2, Quality Assurance Project Plan, is qualified to perform the tasks associated with that function. This requalification is used for personnel performing ITR-RTR activities associated with these batches at AMWTP and who are currently qualified in the prerequisite qualifications listed below. This requalification document provides the candidate with a comprehensive foundation in the knowledge and skills required for compliant task performance. This qualification expires 24 months from the grant date.

Maintaining this qualification requires the individual to maintain current qualification in QPOT03A0 (Real Time Radiography). Recurring training must be completed prior to expiration.

Extended absences, identified training expires, failure of recurring proficiency/performance exams, performance deficiencies, etc. may result in disqualification of the individual until any or all conditions are remediated.

AMWTP	*Advanced Mixed Waste Treatment Project* *REQUALIFICATION CHECKLIST* *Level I Validation Independent Technical Reviewer for RTR*	**QCITRRTR** **Rev 0**

Employee Name Denise Lee S# 616645

2.0 Prerequisites

Ensure the trainee has successfully completed the requirements listed below before completing this qualification checklist.

The Employee Position Description (EPD), Form-1018 has been reviewed or a new one completed to ensure the duties of this position are included and to verify the education and experience requirements have been satisfied. (MP-RTQP-14.1).

The employees Individual Training Plan (ITP), Form-1020, is current, or has been updated, to include the appropriate RCRA Profile and all general courses required for individuals performing Level I Validation activities.

The ITP also includes the qualification checklists for all applicable equipment that will be used by operators in this job scope.

The employee has completed all initial training *and is current* on the applicable qualifications / checklists listed on the ITP to support this qualification package.

Craig Bye — Employee's Production Manager — 2/25/14 — Date

	Date Requirement Was Completed	**Signature** (Training Specialist or Level I Validation Lead)	**Date**
2.1 QPOT03A, Real Time Radiography (Current)	1/21/13	Amy Betts	2/25/14
2.2 QCITRRTR, Level I Validation Independent Technical Reviewer for RTR OR QPITR3A, Level I Validation	3/12/12	Amy Betts	2/25/14

Employee Name Denise Lee S# 611645

3.0 Initial & Continuing Training / Knowledge / Required Reading

The initial training courses identified pertain to the job function/duties and will be verified complete by the ITR Lead or a Training Representative.

3.1 Training Courses (Indicate Courses that are Recurring):	Date Requirement was Complete	Recurring Training /Qualification Frequency
3.1.1 0AWT1118, LLW/MLLW Disposition Program	2/17/14	24 months
Training representative or ITR Lead verify initial training courses are complete:	Amy Bethel	2/25/14
	Signature	Date

Sign-off by the ITR Lead indicates that each required reading has been reviewed IAW with the Training/Evaluation Standard and that the Trainee demonstrates a satisfactory understanding of how it pertains to their job responsibilities

3.2 Required Reading: Operating Instructions	ITR Lead Signature	Date
3.2.1 None	N/A	N/A

3.3 Required Reading: Other Documents	ITR Lead Signature	Date
3.3.1 None	N/A	N/A

AMWTP Advanced Mixed Waste Treatment Project	*Advanced Mixed Waste Treatment Project* *REQUALIFICATION CHECKLIST* *Level I Validation Independent Technical Reviewer for RTR*	**QCITRRTR** **Rev 0**

Employee Name Denise Lee S# 61645

Sign-off by the Level I Validation Lead indicates that each knowledge item has been reviewed IAW with the Training/Evaluation Standard and that the Trainee demonstrates a satisfactory understanding of how it pertains to their job responsibilities.

3.4 Knowledge:	ITR Lead Signature or as indicated	Date
3.4.1 Discuss any recent changes to the WTS System and how it applies to tasks covered in this qualification checklist.	Steve Fall	3/11/14
3.4.2 Discuss any lessons learned regarding Level I Validation activities that have occurred within the past 24 months. Lessons Learned Discussed: missed prob. b/l items impenetrable criteria liquid estimations PMR changes	Steve Fall	3/11/14

Employee Name Denise Lee S# 611645

4.0 OJT Training Objectives

The elements below are to be performed (P), simulated (S), or discussed (D) as indicated. If there are two or more choices (P, S, or D), then circle which one was used.

Sign-off by the ITR Lead indicates successful performance of the task. If the trainee cannot perform the task without coaching, terminate the Performance Assessment.

		P S D	ITR OJT or TRU Programs Mgr. Signature & date
4.1	**RTR- ITR Over-Train Tasks**		
4.1.1	Demonstrate how to include or reference NCRs in the BDR as appropriate and how to ensure that WTS is flagged	P	ST all 3/11/14
4.1.2	Demonstrate how to generate NCRs and notify Head Space Gas Sampling Chemists and ensure WTS is flagged as appropriate if rework has been identified that changes the liner puncture status.	S	Stu Tall 3/11/14
4.1.3	Demonstrate how to document the presence or absence of prohibited items.	P (S)	Stu Tall 3/11/14
4.1.4	Demonstrate how to generate and document an NCR in WTS when prohibited items have been identified and demonstrate how to flag the NCR in WTS.	P (S)	Stu Tall 3/11/14

Employee Name Denise Lee S# 61645

5.0 **Emergency / Abnormal Conditions**
The elements below are to be simulated (S) or discussed (D) as indicated. If both S and D are indicated, then circle which one was used. Sign-off by the evaluator indicates successful performance of the task. If the trainee cannot perform the task without coaching, terminate the Performance Assessment.

		S D	ITR OJT or TRU Programs Mgr. Signature	Date
5.1	Fire / Alarm	S (D)	Steve Tall	3/11/14
5.2	Location of fire extinguishers / fire alarm boxes	S (D)	Steve Tall	3/11/14
5.3	Spill / Contamination Release (MP-EC&P-7.10)	S (D)	Steve Tall	3/11/14
5.4	Injured Person	S (D)	Steve Tall	3/11/14
5.5	Evacuation (MP-EP&C-12.~~7~~16) Mod. 0A	S (D)	Steve Tall	3/11/14
5.6	Take Cover (MP-EP&C-12.~~7~~16) Mod. 0A	S (D)	Steve Tall	3/11/14

AMWTP	*Advanced Mixed Waste Treatment Project* *REQUALIFICATION CHECKLIST* *Level I Validation Independent Technical Reviewer for RTR*	**QCITRRTR** **Rev 0**

Employee Name Denise Lee S# C61645

6.0 **Examinations** (Sections 1-5 must be complete prior to testing)		
Written Exam (80% required to pass) Exam #: 1 Score: 90% *(If first exam is failed the supervisor must assign remedial training)* Form-1039 attached ☐ (check box when completed form-1039 is attached. Not required if first exam is passed.) Re-exam # _____ Score:_____ (N/A if first exam is passed with 80% or greater)		
Exam Passed	Amy Botts Exam Proctor Signature	3/11/14 Date

7.0 **Recommendation for Qualification**		
After discussion with the candidate concerning this job scope, the ITR Lead or TRU Programs Mgr. acknowledges that the trainee possesses the knowledge, skills, and abilities to perform this job function correctly the first time, safely and compliantly. In addition, the ITR Lead or TRU Programs Mgr. has completed the quality validation of this document in accordance with the requirements in MP-DOCS-18.2. (Guidance is given in the Training/Evaluation Standard)		
ITR Lead or TRU Programs Mgr. Title	George B Signature	3/11/14 Date

Upon satisfactory completion of this requalification checklist, the TRU Programs Manager *may* grant Qualification to the trainee on the front cover of this qualification checklist.

DIVIDER

PAGE

INFORMATION ONLY

AMWTP	Advanced Mixed Waste Treatment Project REQUALIFICATION CHECKLIST Level I Validation Independent Technical Reviewer for RTR	QCITRRTR Rev 0

Employee Name Craig Simmons S# 58429

Level I Validation Independent Technical Reviewer for RTR

Requalification Checklist #: QCITRRTR

The manager granting qualification acknowledges that the employee possesses the knowledge, skills, and abilities to perform this job function correctly the first time, safely and compliantly.

Qualification granted by: **TRU Programs Mgr.**	George Pyram		3/12/14
Manager Title	Print Name	Signature	Date

Form-1268, Production System Access Request, has been submitted for the appropriate WTS role(s) for this individual.	Craig Simmons		3/12/14
Title	Print Name	Signature	Date

Required Attachments: Check box if attached	Written Exam ☐	Remedial Form ☐	Exception Form ☐ (If used)

Qual Pack Issued By :	Amy Betzer		3/25/14
	Print Name	Signature	Date

TRAINING DEPT.
MAR 12 2014

Qualification Checklist Approval Section

Initials:

Line Manager Approval	Sue Peterman	Signature on File	1/24/12
	Print Name	Signature	Date

Training Manager Approval	Mike Parrish	Signature on File	1/26/12
	Print Name	Signature	Date

AMWTP Advanced Mixed Waste Treatment Project	*Advanced Mixed Waste Treatment Project* *REQUALIFICATION CHECKLIST* *Level I Validation Independent Technical Reviewer for RTR*	QCITRRTR Rev 0

Employee Name Craig Simmons S# 58429

Revision History

Revision Number	Affected Pages	Description of Change	Date
0	All	The ITR qualification was previously contained in one checklist (QPITR3A) which incorporated ITR duties for VE, Solid Sampling/Coring, and RTR batch validation. Those ITR duties have now been split into three separate checklists for each ITR area. This checklist applies to ITR RTR activities.	1/26/12

Modification Record

Mod Letter	Affected Pages	Description of Change	Management Approval *	Date
0A	8	Items 5.5 and 5.6: Change reference to procedure to MP-EP&C-12.16	S. Peterman (Signature on File)	5/3/12

* Manager signature required for modifications.

AMWTP Advanced Mixed Waste Treatment Project	*Advanced Mixed Waste Treatment Project* *REQUALIFICATION CHECKLIST* *Level I Validation Independent Technical Reviewer for RTR*	**QCITRRTR** **Rev 0**

Employee Name Craig Simmons S# 58429

Signature Roster

Personnel signing blocks in this requalification checklist must print their name legibly, sign and initial. Signature by Evaluators indicates they have used the Training/Evaluation Standard and performed evaluations IAW MP-RTQP-14.13. Copy this sheet if necessary.

Name (Printed)	Signature	Initials
Amy Betzer	Amy Betzer	AB
Steve Tallman	Steve Tall	SLT
George Byram	George Byram	JB

1.0 Scope

This requalification checklist is developed to provide assurance that an individual performing Level I Validation of RTR batch data in accordance with the requirements of MP-TRUW-8.2, Quality Assurance Project Plan, is qualified to perform the tasks associated with that function. This requalification is used for personnel performing ITR-RTR activities associated with these batches at AMWTP and who are currently qualified in the prerequisite qualifications listed below. This requalification document provides the candidate with a comprehensive foundation in the knowledge and skills required for compliant task performance. This qualification expires 24 months from the grant date.

Maintaining this qualification requires the individual to maintain current qualification in QPOT03A0 (Real Time Radiography). Recurring training must be completed prior to expiration.

Extended absences, identified training expires, failure of recurring proficiency/performance exams, performance deficiencies, etc. may result in disqualification of the individual until any or all conditions are remediated.

AMWTP	*Advanced Mixed Waste Treatment Project* *REQUALIFICATION CHECKLIST* *Level I Validation Independent Technical Reviewer for RTR*	QCITRRTR Rev 0

Employee Name Craig Simmons S# 58429

2.0 Prerequisites

Ensure the trainee has successfully completed the requirements listed below before completing this qualification checklist.

The Employee Position Description (EPD), Form-1018 has been reviewed or a new one completed to ensure the duties of this position are included and to verify the education and experience requirements have been satisfied. (MP-RTQP-14.1).

The employees Individual Training Plan (ITP), Form-1020, is current, or has been updated, to include the appropriate RCRA Profile and all general courses required for individuals performing Level I Validation activities.

The ITP also includes the qualification checklists for all applicable equipment that will be used by operators in this job scope.

The employee has completed all initial training *and is current* on the applicable qualifications / checklists listed on the ITP to support this qualification package.

George Bu — Employee's Production Manager — 2/25/14 Date

	Date Requirement Was Completed	**Signature** (Training Specialist or Level I Validation Lead)	**Date**
2.1 QPOT03A, Real Time Radiography (Current)	1/21/13	Amy Bethea	2/25/14
2.2 QCITRRTR, Level I Validation Independent Technical Reviewer for RTR OR QPITR3A, Level I Validation	3/12/12	Amy Bethea	2/25/14

Employee Name Craig Simmons S# 58429

3.0 Initial & Continuing Training / Knowledge / Required Reading

The initial training courses identified pertain to the job function/duties and will be verified complete by the ITR Lead or a Training Representative.

3.1 Training Courses (Indicate Courses that are Recurring):	Date Requirement was Complete	Recurring Training /Qualification Frequency
3.1.1 0AWT1118, LLW/MLLW Disposition Program	2/17/14	24 months
Training representative or ITR Lead verify initial training courses are complete:	Amy Bell Signature	2/25/14 Date

Sign-off by the ITR Lead indicates that each required reading has been reviewed IAW with the Training/Evaluation Standard and that the Trainee demonstrates a satisfactory understanding of how it pertains to their job responsibilities

3.2 Required Reading: Operating Instructions	ITR Lead Signature	Date
3.2.1 None	N/A	N/A

3.3 Required Reading: Other Documents	ITR Lead Signature	Date
3.3.1 None	N/A	N/A

AMWTP	Advanced Mixed Waste Treatment Project REQUALIFICATION CHECKLIST Level I Validation Independent Technical Reviewer for RTR	QCITRRTR Rev 0

Employee Name Craig Simmons S# 58429

Sign-off by the Level I Validation Lead indicates that each knowledge item has been reviewed IAW with the Training/Evaluation Standard and that the Trainee demonstrates a satisfactory understanding of how it pertains to their job responsibilities.

3.4 Knowledge:	ITR Lead Signature or as indicated	Date
3.4.1 Discuss any recent changes to the WTS System and how it applies to tasks covered in this qualification checklist.	Steve Tall	2/24/14
3.4.2 Discuss any lessons learned regarding Level I Validation activities that have occurred within the past 24 months. Lessons Learned Discussed: original / replicate not matching missed prohibited items Liquid estimations waste material parameters (Bx this)	Steve Tall	2/25/14

Employee Name Craig Simmons S# 58429

4.0 OJT Training Objectives

The elements below are to be performed (P), simulated (S), or discussed (D) as indicated. If there are two or more choices (P, S, or D), then circle which one was used.

Sign-off by the ITR Lead indicates successful performance of the task. If the trainee cannot perform the task without coaching, terminate the Performance Assessment.

		P S D	ITR OJT or TRU Programs Mgr. Signature & date
4.1	**RTR- ITR Over-Train Tasks**		
4.1.1	Demonstrate how to include or reference NCRs in the BDR as appropriate and how to ensure that WTS is flagged	P	Steve Tall 2/25/14
4.1.2	Demonstrate how to generate NCRs and notify Head Space Gas Sampling Chemists and ensure WTS is flagged as appropriate if rework has been identified that changes the liner puncture status.	S	Steve Tall 2/25/14
4.1.3	Demonstrate how to document the presence or absence of prohibited items.	P (S)	Steve Tall 2/25/14
4.1.4	Demonstrate how to generate and document an NCR in WTS when prohibited items have been identified and demonstrate how to flag the NCR in WTS.	P (S)	Steve Tall 2/25/14

AMWTP Advanced Mixed Waste Treatment Project	*Advanced Mixed Waste Treatment Project* *REQUALIFICATION CHECKLIST* *Level I Validation Independent Technical Reviewer for RTR*	**QCITRRTR** **Rev 0**

Employee Name Craig Simmons S# 58424

5.0 ***Emergency / Abnormal Conditions***
The elements below are to be simulated (S) or discussed (D) as indicated. If both S and D are indicated, then circle which one was used. Sign-off by the evaluator indicates successful performance of the task. If the trainee cannot perform the task without coaching, terminate the Performance Assessment.

		S D	ITR OJT or TRU Programs Mgr. Signature	Date
5.1	Fire / Alarm	S (D)	Steve Tall	2/25/14
5.2	Location of fire extinguishers / fire alarm boxes	S (D)	Steve Tall	2/25/14
5.3	Spill / Contamination Release (MP-EC&P-7.10)	S (D)	Steve Tall	2/25/14
5.4	Injured Person	S (D)	Steve Tall	2/25/14
5.5	Evacuation (MP-EP&C-12.~~7~~16) Mod. 0A	S (D)	Steve Tall	2/25/14
5.6	Take Cover (MP-EP&C-12.~~7~~16) Mod. 0A	S (D)	Steve Tall	2/25/14

AMWTP	*Advanced Mixed Waste Treatment Project* *REQUALIFICATION CHECKLIST* *Level I Validation Independent Technical Reviewer for RTR*	**QCITRRTR** **Rev 0**

Employee Name Craig Simmons S# 58429

6.0 **Examinations** (Sections 1-5 must be complete prior to testing)		
Written Exam (80% required to pass) Exam #: 1 Score: 100% *(If first exam is failed the supervisor must assign remedial training)* Form-1039 attached ☐ (check box when completed form-1039 is attached. Not required if first exam is passed.) Re-exam # _____ Score:_____ (N/A if first exam is passed with 80% or greater)		
Exam Passed	Amy Baltz Exam Proctor Signature	3/4/14 Date

7.0 **Recommendation for Qualification**		
After discussion with the candidate concerning this job scope, the ITR Lead or TRU Programs Mgr. acknowledges that the trainee possesses the knowledge, skills, and abilities to perform this job function correctly the first time, safely and compliantly. In addition, the ITR Lead or TRU Programs Mgr. has completed the quality validation of this document in accordance with the requirements in MP-DOCS-18.2. (Guidance is given in the Training/Evaluation Standard)		
ITR Lead or TRU Programs Mgr. Title	Steve Todd Signature	2/25/14 Date

Upon satisfactory completion of this requalification checklist, the TRU Programs Manager may grant Qualification to the trainee on the front cover of this qualification checklist.

DIVIDER

PAGE

AMWTP Advanced Mixed Waste Treatment Project	Advanced Mixed Waste Treatment Project REQUALIFICATION PACKAGE Visual Examiner	QPVE0001 Rev. 4

Employee Name Conley G. Beebe S# 101606

VISUAL EXAMINER

Requalification Package Number: QPVE0001

The manager granting qualification acknowledges that the employee possesses the knowledge, skills, and abilities to perform this job function correctly the first time, safely and compliantly.

Qualification granted by:	C.A. STEPZINSKI		06/26/14
Production Manager	Print Name	Signature	Date

Form-1268, Production System Access Request, has been submitted for the appropriate WTS role(s) for this individual.	C.A. STEPZINSKI		06/26/14
	Print Name	Signature	Date

Required Attachments: Check box if attached	Remedial Form ☐ (If used)	Exception Form ☐ (If used)

Qual Pack Issued By :	Amy Betzer		5/27/14
	Print Name	Signature	TRAINING DEPT. JUN 26 2014

7/2/14 cf

Qualification Package Approval Section Initials: CF

Line Manager Approval	S. Peterman	Signature on file	10/2/2012
	Print Name	Signature	Date

Training Manager Approval	Todd Golberg	Signature on file	10/2/2012
	Print Name	Signature	Date

AMWTP Advanced Mixed Waste Treatment Project	*Advanced Mixed Waste Treatment Project* *REQUALIFICATION PACKAGE* *Visual Examiner*	QPVE0001 Rev. 4

Employee Name Conley G. Beebe S# 101606

Revision History

Revision Number	Affected Pages	Description of Change	Date
0	All	Initial Issue. QPVE0001 was generated to replace QPOT4B and FQPOT10A. QPVEE0002 and QPVE0003 were generated as delta qualification for personnel who were current in QPOT4B and FQPOT10A.	05/30/07
1	All	Update the VE qual. pack to meet new WIPP 311 Permit Modifications. Retire QP-OT-4B Characterization VE; FQP-OT-10A Facility VE; QCCVEFVE Characterization Visual Examination Operators to qualify as Facility Visual Examination Operators; QPVE0002 Pre-Qualified Visual Examiner; and QPVE0003 Pre-Qualified Visual Examiner.	05/30/08
2	All	Revised JTAL to make more specific to VE tasks.	03/04/09
3	All	Made editorial changes. Updated format and incorporated evaluation standard.	3/29/10
4	All	Periodic review and update.	10/2/12

Mod Letter	Affected Pages	Description of Change	Management Approval *	Date

* Manager signature required for modifications.

AMWTP Advanced Mixed Waste Treatment Project	*Advanced Mixed Waste Treatment Project* *REQUALIFICATION PACKAGE* *Visual Examiner*	QPVE0001 Rev. 4

Employee Name Conley G. Beebe S# 101606

Signature Roster

Personnel signing blocks in this qualification package must print their name legibly, sign and initial. Signature by Evaluators indicates they have used the Training/Evaluation Standard and performed evaluations IAW MP-RTQP-14.13. Copy this sheet if necessary.

Name (Printed)	Signature	Initials
Amy Botzer	Amy Botzer	AB
Mark Sorenson	Mark Sorenson	M.S.
J Becker	J Becker	JB
C.A. Stepzinski		CAS

AMWTP Advanced Mixed Waste Treatment Project	Advanced Mixed Waste Treatment Project REQUALIFICATION PACKAGE Visual Examiner	QPVE0001 Rev. 4

Employee Name Conley G. Beebe S# 101606

1.0 Scope

This requalification package assures the knowledge and skill requirements for personnel performing VE at AMWTP are maintained. This requalification is valid for 24 months, after which, another requalification checklist must be completed to maintain qualification status.

Individuals may be disqualified for any of the following: Extended absence, identified training expires, failure of recurring proficiency/performance exams, performance deficiencies, etc. as applicable.

2.0 Prerequisites

Ensure the trainee has successfully completed the requirements listed below before completing this requalification package.

The employee has completed all initial training *and is current* on the applicable qualifications / checklists listed on the ITP to support this qualification package.

Employee's Production Manager — Date: 06/26/14

	Date Requirement Was Completed	Signature (Training Representative or SS)	Date
2.1 Completion of VE qualification (QPVE0001).	7/9/12	Amy Betts	5/27/14

Employee Name Conley G. Beebe S# 101606

3.0 Initial & Continuing Training / Knowledge / Required Reading

The initial training courses identified pertain to the job function/duties and will be verified complete by the employee's SS, the VEE SME or Lead, or a Training Representative.

3.1 Training Courses (Indicate Courses that are Recurring):	Date Requirement was Complete	Recurring Training /Qualification Frequency
3.1.1 0AWT1118, LLW/MLLW Disposition Plan	01/07/14	24 months
VEE SME or Lead, Training Representative or SS verify training courses are complete:	Mark Sorenson Signature	6/20/14 Date

Sign-off by the VEE indicates that each required reading has been reviewed IAW with the Training/Evaluation Standard and that the Trainee demonstrates a satisfactory understanding of how it pertains to their job responsibilities.

3.2 Required Reading: Operating Instructions	VEE	Date
3.2.1 Discuss any recent changes to INST-OI-34 and INST-FOI-17.	Mark Sorenson	06/20/14
3.3 Required Reading: Other Documents	**VEE**	**Date**
3.3.1 None	N/A	N/A

Sign-off by the OJT Instructor or SS indicates that each knowledge item has been reviewed IAW with the Training/Evaluation Standard and that the Trainee demonstrates a satisfactory understanding of how it pertains to their job responsibilities.

3.4 Knowledge:	VEE / SS Signature	Date
3.4.1 Discuss any lessons learned concerning Visual Examination.	Mark Sorenson	6/20/14
3.4.2 Discuss the any applicable Criticality Working Requirements (CWRs).	Mark Sorenson	6/20/14

AMWTP Advanced Mixed Waste Treatment Project	Advanced Mixed Waste Treatment Project REQUALIFICATION PACKAGE Visual Examiner	QPVE0001 Rev. 4

Employee Name Conley G. Beebe S# 101606

3.4 Knowledge:	VEE / SS Signature	Date

4.0 OJT Training Objectives

The elements below are to be performed (P), simulated (S), or discussed (D) as indicated. Circle all that apply.

Sign-off by the VEE (as the Evaluator) indicates successful performance of the task. If the trainee cannot perform the task without coaching, terminate the Performance Assessment.

VE Over-Train Performance Objectives		P S D	Evaluator Signature & date
4.1	Generate (enter) examination related data into WTS.	P(S)	Mark Sorenson 6/20/14
4.2	Verify (concur with) examination-related data entered into WTS.	P(S)	Mark Sorenson 6/20/14
4.3	Identify closure methods and layers of confinement.	P(S)	Mark Sorenson 6/20/14
4.4	Discuss how to ensure DQOs are met.	(D)	Mark Sorenson 6/20/14
4.5	Identify packaging configurations.	P(S)	Mark Sorenson 6/20/14
4.6	Assign proper Waste Material Parameters to waste.	P(S)	Mark Sorenson 6/20/14
4.7	Perform weight and volume conversions using procedural aids.	P(S)	Mark Sorenson 6/20/14
4.8	Assign the correct IDC and Waste Matrix Code during the VE process.	P(S)	Mark Sorenson 6/20/14
4.9	Identify the path forward for prohibited and nonconforming items and the associated NCRs.	P(S)	Mark Sorenson 6/20/14
4.10	Identify common and conditional waste items through VE or video.	P(S)	Mark Sorenson 6/20/14
4.11	Identify packaging and waste materials.	P(S)	Mark Sorenson 6/20/14

AMWTP Advanced Mixed Waste Treatment Project	Advanced Mixed Waste Treatment Project REQUALIFICATION PACKAGE Visual Examiner	QPVE0001 Rev. 4

Employee Name Conley G. Reese S# 101606

VE Over-Train Performance Objectives		P S D	Evaluator Signature & date
4.12	Identify prohibited and suspect items through VE or video.	P(S)	Mark Sorenson 6/20/14
4.13	Assign correct IDCs for newly generated secondary waste and compacted waste.	P(S)	Mark Sorenson 6/20/14
4.14	Estimate volumes and nominal densities of waste.	P(S)	Mark Sorenson 6/20/14
4.15	Identify rigid liner types and their status and condition.	P(S)	Mark Sorenson 6/20/14
4.16	Identify filter models and update WTS for filter removal/insertion on the Container Filters screen.	P(S)	Mark Sorenson 06/20/14
4.17	Perform Newly Generated Waste (NGW) package VE.	P(S)	Mark Sorenson 06/20/14
4.18	Perform Newly Generated Waste Closure VE.	P(S)	Mark Sorenson 06/20/14
4.19	Perform VE of Legacy Waste.	P(S)	Mark Sorenson 06/20/14
4.20	Perform Boxline VE (BiD).	P(S)	Mark Sorenson 06/20/14
4.21	Perform Boxline VE (DiD) using volume estimates and nominal densities.	P(S)	Mark Sorenson 06/20/14
4.22	Perform RTR VE Update (RVU) for Prohibited Item removal (using volume estimates and nominal densities).	P(S)	Mark Sorenson 06/20/14
4.23	Perform RVU for the final configuration of a Coring Drum.	P(S)	Mark Sorenson 06/20/14
4.24	Perform RVU for the final configuration of a Treatment Drum.	P(S)	Mark Sorenson 06/20/14
4.25	Perform an update of an NCR for Treatment or the removal of suspect / prohibited items.	P(S)	Mark Sorenson 06/20/14

AMWTP Advanced Mixed Waste Treatment Project	*Advanced Mixed Waste Treatment Project* *REQUALIFICATION PACKAGE* *Visual Examiner*	QPVE0001 Rev. 4

Employee Name Conley G. Beebe S# 101606

5.0 ***Emergency / Abnormal Conditions***
The elements below are to be simulated (S) or discussed (D) as indicated. If both S and D are indicated, then circle which one was used. Sign-off by the SS indicates successful performance of the task. If the trainee cannot perform the task without coaching, terminate the Performance Assessment.

		P S D	SS Signature	Date
5.1	Fire / Alarm (OI-33, FOI-16, AOI-10, RS&C-6.12)	S (D)	CBeebe	06/20/14
5.2	Location of fire extinguishers / fire alarm boxes in WMF-634, 676, and 628.	S (D)	CBeebe	06/20/14
5.3	Dropped waste container (MP-EC&P-12.9)	S (D)	CBeebe	06/20/14
5.4	Breached Container (INST-OI-11; INST-FOI-20)	S (D)	CBeebe	06/20/14
5.5	CAM Alarm (OI-11, RS&C-6.12)	S (D)	CBeebe	06/20/14
5.6	Spill / Contamination Release (INST-OI-88)	S (D)	CBeebe	06/20/14
5.7	Injured Person (MP-ISIH-2.54, RS&C-6.12)	S (D)	CBeebe	06/20/14
5.8	Loss of ventilation/air system (OI-11, AOI-05, OI-16, OI-33)	S (D)	CBeebe	06/20/14
5.9	Loss of Commercial Power (AOI-04)	S (D)	CBeebe	06/20/14
5.10	Evacuation (EP&C-12.16)	S (D)	CBeebe	06/20/14
5.11	Take Cover (EP&C-12.16)	S (D)	CBeebe	06/20/14

AMWTP Advanced Mixed Waste Treatment Project	*Advanced Mixed Waste Treatment Project* *REQUALIFICATION PACKAGE* *Visual Examiner*	**QPVE0001** **Rev. 4**

Employee Name Conley G. Beebe S# 10606

6.0 **Examinations** (Sections 1-5 must be complete prior to testing)	**NO TEST REQUIRED**

7.0 **Recommendation for Requalification**		
After discussion with the candidate concerning this job scope, the Visual Examination Expert (VEE) acknowledges that the trainee possesses the knowledge, skills, and abilities to perform this job function correctly the first time, safely and compliantly. In addition, the VEE has completed the quality validation of this document in accordance with the requirements in MP-DOCS-18.2. (Guidance is given in the Training/Evaluation Standard)		
Visual Examination Expert	Mark Johnson	6/20/14
Title	Signature	Date

Upon satisfactory completion of this qualification package, the Characterization or Facility Production Manager may grant Re-Qualification to the trainee on the front cover of this re-qualification package.

DIVIDER

PAGE

AMWTP Advanced Mixed Waste Treatment Project	*Advanced Mixed Waste Treatment Project* *REQUALIFICATION PACKAGE* *Visual Examination Expert*	**QCVEE001** **Rev 1**

Employee Name Ron Grise S# 103914

Visual Examination Expert

Requalification Package Number: QCVEE001

The manager granting qualification acknowledges that the employee possesses the knowledge, skills, and abilities to perform this job function correctly the first time, safely and compliantly.

Qualification granted by: **Level I Validation Manager** Manager Title	George Byron Print Name	George Byron Signature	4/3/13 4/3/13 Date 10/9/14

Form-1268, Production System Access Request, has been submitted for the appropriate WTS role(s) for this individual.			
	Print Name/Title	Signature	Date

Required Attachments: Check box if attached	Remedial Form ☐ (If used) Exception Form ☐ (If used)

Qual Pack Issued By :	Holly Clark Print Name	Holly Clark Signature	3/18/13 Date

Qualification Package Approval Section

Line Manager Approval	Jim Jackson Print Name	Signature on file Signature	6//10 Date

Training Manager Approval	Ralph Hartline Print Name	Signature on file Signature	6/9/10 Date

TRAINING DEPT

APR 03 2013

4-4-13

Initials CK

Employee Name Ron Grise S# 103914

AMWTP Advanced Mixed Waste Treatment Project	*Advanced Mixed Waste Treatment Project* *REQUALIFICATION PACKAGE* *Visual Examination Expert*	**QCVEE001** **Rev 1**

Employee Name Ron Grise S# 103914

Revision History

Revision Number	Affected Pages	Description of Change	Date
0	ALL	Initial Issue.	5-28-08
1	ALL	Update to new format; changes to reflect new task list.	6-30-10

Modification Record

Mod Letter	Affected Pages	Description of Change	Management Approval *	Date
A	All	Completed periodic Review	S. Peterman	8/20/12

* Manager signature required for modifications.

AMWTP Advanced Mixed Waste Treatment Project	*Advanced Mixed Waste Treatment Project* *REQUALIFICATION PACKAGE* *Visual Examination Expert*	**QCVEE001** **Rev 1**

Employee Name Ron Grise S# 103914

Signature Roster
Personnel signing blocks in this qualification package must print their name legibly, sign and initial. Signature by Evaluators indicates they have used the Training/Evaluation Standard and performed evaluations IAW MP-RTQP-14.13. Copy this sheet if necessary.

Name (Printed)	Signature	Initials
Holly Clark	Holly Clark	HC
SM Peterman	SM Peterman	SMP
David J. Preston	David J Preston	DJP
George Bygram	George Bygram	GB

AMWTP Advanced Mixed Waste Treatment Project	*Advanced Mixed Waste Treatment Project* *REQUALIFICATION PACKAGE* *Visual Examination Expert*	**QCVEE001** **Rev 1**

Employee Name Ron Grise S# 103914

1.0 Scope

This qualification checklist has been developed in order to requalifiy individuals acting as Visual Examination Experts at AMWTP.

The employee's management will assign a target date for completion of this checklist not to exceed six months. TRU Programs Management may decide the path forward if the individual has not completed the checklist by the target date.

The individual may be disqualified for any of the following: extended absence, identified training expires, failure of recurring proficiency/performance exams, performance deficiencies, etc.

2.0 Prerequisites

Ensure the trainee has successfully completed the requirements listed below before completing this qualification checklist.

The employees Individual Training Plan (ITP), Form-1020, is current, or has been updated, to include the appropriate RCRA Profile and all courses required for personnel performing tasks in the capacity of a VEE Lead.

Checklist completion target date:	Level I Validation Manager	3/18/13 Date

	Date Requirement Was Completed	**Signature** (Training Representative or VEE Lead)	**Date**
2.1 Completion of QCVEE001	5/12/11 ~~2-05-13~~ HC 3/18/13	Holly C. Clark	3/18/13

3.0 Initial & Continuing Training / Knowledge / Required Reading

The initial training courses identified pertain to the job function/duties and will be verified complete by the VEE SME, VEE Lead, or a Training Representative.

3.1 Training Courses (Indicate Courses that are Recurring):	Date Requirement was Complete	Recurring Training /Qualification Frequency
None required for requalification	N/A	N/A

AMWTP Advanced Mixed Waste Treatment Project	*Advanced Mixed Waste Treatment Project* *REQUALIFICATION PACKAGE* *Visual Examination Expert*	**QCVEE001** **Rev 1**

Employee Name Ron Grise S# 1039141

Sign-off by the VEE Lead or SME indicates that the Trainee demonstrates a satisfactory understanding of how the following required reads pertain to their job responsibilities.

3.2 **Required Reading: Operating Instructions**	**VEE Lead or SME**	**Date**
3.2.1 Discuss any changes to procedures that may affect VEE activities.	David J Dexter	3/26/13

3.3 **Required Reading: Other Documents**	**VEE Lead or SME**	**Date**
3.3.1 Discuss any changes to the DSA, TSRs, or WIPP WAC that may affect VEE activities.	David J Dexter	3/26/13

Sign-off by the VEE Lead or SME indicates that each knowledge item has been reviewed and that the Trainee demonstrates a satisfactory understanding of how it pertains to their job responsibilities

3.4 **Knowledge:**	**VEE Lead or SME**	**Date**
3.4.1 Discuss any lessons learned concerning Visual Examination.	David J Dexter	3/26/13

4.0 OJT Training Objectives

The elements below are to be performed (P), simulated (S), or discussed (D) as indicated. If there are two or more choices (P, S, or D), then circle all that apply.
Sign-off by the VEE (as the Evaluator) indicates successful performance of the task. If the trainee cannot perform the task without coaching, terminate the Performance Assessment.

	P S D	**Evaluator Signature & date**
4.1 VEE Continuing Training Objectives		
4.1.1 Estimate and discuss Volumes and Nominal Densities through video or VE.	(P) S	David J Dexter 3/26/13
4.1.2 Perform volume and weight conversions.	(P) S	David J Dexter 3/26/13
4.1.3 Discuss conditions where a VE cannot be performed.	(D)	David J Dexter 3/26/13
4.1.4 Discuss the conditions under which a VEE would need to change or override data in WTS.	(D)	David J Dexter 3/26/13

Employee Name Ron Grise S# 103914

5.0 *Emergency / Abnormal Conditions*

The elements below are to be simulated (S) or discussed (D) as indicated. If both S and D are indicated, then circle which one was used.

Initials by the VEE Lead or SME indicate that the Trainee is ready to be evaluated per MP-RTQP-14.13. The Trainee has a satisfactory understanding of how it pertains to his/her job responsibilities. It is noted that a successful practice cannot count as a successful OJT evaluation.

Sign-off by the evaluator indicates successful performance of the task. If the trainee cannot simulate or discuss the task without coaching, terminate the Performance Assessment.

	S D	VEE Lead or SME	Evaluator Signature	Date
5.1 Evacuation (MP-EP&C-12.7)	S(D)	DJP	David J Deaton	3/26/13
5.2 Take Cover (MP-EP&C-12.7)	S(D)	DJP	David J Deaton	3/26/13

6.0 **Examinations** (Sections 1-5 must be complete prior to testing) **NO EXAM REQUIRED**

7.0 **Recommendation for Qualification**

After discussion with the candidate concerning this job scope, the Visual Examination Expert Lead or SME acknowledges that the trainee possesses the knowledge, skills, and abilities to perform this job function correctly the first time, safely and compliantly.

In addition, the individual recommending qualification of the candidate has completed the quality validation of this document in accordance with the requirements in MP-DOCS-18.2. (Guidance is given in the Training/Evaluation Standard)

VEE Lead or SME	David J Deaton	3/26/13
Title	Signature	Date

Upon satisfactory completion of this qualification package, the Level I Validation Manager may grant Qualification to the trainee on the front cover of this qualification package.

DIVIDER

PAGE

AMWTP Advanced Mixed Waste Treatment Project	*Advanced Mixed Waste Treatment Project* *REQUALIFICATION PACKAGE* *Visual Examination Expert*	**QCVEE001** **Rev 1**

Employee Name L J WALKER S# 9D1454

Visual Examination Expert

Requalification Package Number: QCVEE001

The manager granting qualification acknowledges that the employee possesses the knowledge, skills, and abilities to perform this job function correctly the first time, safely and compliantly.

Qualification granted by: **Level I Validation Manager** Manager Title	George Byram Print Name	George Byram Signature	5/12/14 Date

Form-1268, Production System Access Request, has been submitted for the appropriate WTS role(s) for this individual.	L J WALKER / VEE Print Name/Title	L J Walker Signature	5/12/14 Date

Required Attachments: Check box if attached	Remedial Form ☐ (If used) Exception Form ☐ (If used)

Qual Pack Issued By :	Amy Betzer Print Name	Amy Betzer Signature	4/16/14 Date

Qualification Package Approval Section

Line Manager Approval	Jim Jackson Print Name	Signature on file Signature	6//10 Date

TRAINING DEPT.
MAY 12 2014
Initials:

Training Manager Approval	Ralph Hartline Print Name	Signature on file Signature	6/9/10 Date

Employee Name LJ WALKER S# 901454

AMWTP Advanced Mixed Waste Treatment Project	*Advanced Mixed Waste Treatment Project* *REQUALIFICATION PACKAGE* *Visual Examination Expert*	**QCVEE001** **Rev 1**

Employee Name L J WALKER S# 9D1454

Revision History

Revision Number	Affected Pages	Description of Change	Date
0	ALL	Initial Issue.	5-28-08
1	ALL	Update to new format; changes to reflect new task list.	6-30-10

Modification Record

Mod Letter	Affected Pages	Description of Change	Management Approval *	Date
A	All	Completed periodic Review	S. Peterman	8/20/12

* Manager signature required for modifications.

AMWTP Advanced Mixed Waste Treatment Project	*Advanced Mixed Waste Treatment Project* *REQUALIFICATION PACKAGE* *Visual Examination Expert*	**QCVEE001** **Rev 1**

Employee Name L J WALKER S# 901454

Signature Roster

Personnel signing blocks in this qualification package must print their name legibly, sign and initial. Signature by Evaluators indicates they have used the Training/Evaluation Standard and performed evaluations IAW MP-RTQP-14.13. Copy this sheet if necessary.

Name (Printed)	Signature	Initials
Amy Betzer	Amy Betz	AB
George Byram	[illegible]	B
Ron Grise	[illegible]	
L J WALKER	[illegible]	

AMWTP Advanced Mixed Waste Treatment Project	*Advanced Mixed Waste Treatment Project* *REQUALIFICATION PACKAGE* *Visual Examination Expert*	**QCVEE001** **Rev 1**

Employee Name LJ WALKER S# 901454

1.0 Scope

This qualification checklist has been developed in order to requalifiy individuals acting as Visual Examination Experts at AMWTP.

The employee's management will assign a target date for completion of this checklist not to exceed six months. TRU Programs Management may decide the path forward if the individual has not completed the checklist by the target date.

The individual may be disqualified for any of the following: extended absence, identified training expires, failure of recurring proficiency/performance exams, performance deficiencies, etc.

2.0 Prerequisites

Ensure the trainee has successfully completed the requirements listed below before completing this qualification checklist.

The employees Individual Training Plan (ITP), Form-1020, is current, or has been updated, to include the appropriate RCRA Profile and all courses required for personnel performing tasks in the capacity of a VEE Lead.

Checklist completion target date:	Gary B. Level I Validation Manager	4/23/14 Date

	Date Requirement Was Completed	**Signature** (Training Representative or VEE Lead)	**Date**
2.1 Completion of QCVEE001	5/30/12	Amy Beth	4/16/14

3.0 Initial & Continuing Training / Knowledge / Required Reading

The initial training courses identified pertain to the job function/duties and will be verified complete by the VEE SME, VEE Lead, or a Training Representative.

3.1 Training Courses (Indicate Courses that are Recurring):	Date Requirement was Complete	Recurring Training /Qualification Frequency
None required for requalification	N/A	N/A

AMWTP Advanced Mixed Waste Treatment Project	*Advanced Mixed Waste Treatment Project* *REQUALIFICATION PACKAGE* *Visual Examination Expert*	**QCVEE001** **Rev 1**

Employee Name L J WALKER S# 901454

Sign-off by the VEE Lead or SME indicates that the Trainee demonstrates a satisfactory understanding of how the following required reads pertain to their job responsibilities.

3.2 **Required Reading: Operating Instructions**	**VEE Lead or SME**	**Date**
3.2.1 Discuss any changes to procedures that may affect VEE activities.	Ron A	4-24-14

3.3 **Required Reading: Other Documents**	**VEE Lead or SME**	**Date**
3.3.1 Discuss any changes to the DSA, TSRs, or WIPP WAC that may affect VEE activities.	Ron A	4-24-14

Sign-off by the VEE Lead or SME indicates that each knowledge item has been reviewed and that the Trainee demonstrates a satisfactory understanding of how it pertains to their job responsibilities

3.4 **Knowledge:**	**VEE Lead or SME**	**Date**
3.4.1 Discuss any lessons learned concerning Visual Examination.	Ron A	4-24-14

4.0 OJT Training Objectives

The elements below are to be performed (P), simulated (S), or discussed (D) as indicated. If there are two or more choices (P, S, or D), then circle all that apply.
Sign-off by the VEE (as the Evaluator) indicates successful performance of the task. If the trainee cannot perform the task without coaching, terminate the Performance Assessment.

	P S D	**Evaluator Signature & date**
4.1 VEE Continuing Training Objectives		
4.1.1 Estimate and discuss Volumes and Nominal Densities through video or VE.	P (S)	Ron A 4-24-14
4.1.2 Perform volume and weight conversions.	P (S)	Ron A 4-24-14
4.1.3 Discuss conditions where a VE cannot be performed.	(D)	Ron A 4-24-14
4.1.4 Discuss the conditions under which a VEE would need to change or override data in WTS.	(D)	Ron A 4-24-14

AMWTP Advanced Mixed Waste Treatment Project	*Advanced Mixed Waste Treatment Project* *REQUALIFICATION PACKAGE* *Visual Examination Expert*	**QCVEE001** **Rev 1**

Employee Name LJ WALKER S# 9D1454

5.0 *Emergency / Abnormal Conditions*

The elements below are to be simulated (S) or discussed (D) as indicated. If both S and D are indicated, then circle which one was used.

Initials by the VEE Lead or SME indicate that the Trainee is ready to be evaluated per MP-RTQP-14.13. The Trainee has a satisfactory understanding of how it pertains to his/her job responsibilities. It is noted that a successful practice cannot count as a successful OJT evaluation.

Sign-off by the evaluator indicates successful performance of the task. If the trainee cannot simulate or discuss the task without coaching, terminate the Performance Assessment.

	S D	VEE Lead or SME	Evaluator Signature	Date
5.1 Evacuation (MP-EP&C-12.7)	S(D)			4-24-14
5.2 Take Cover (MP-EP&C-12.7)	S(D)			4-24-14

6.0 **Examinations** (Sections 1-5 must be complete prior to testing) **NO EXAM REQUIRED**

7.0 **Recommendation for Qualification**

After discussion with the candidate concerning this job scope, the Visual Examination Expert Lead or SME acknowledges that the trainee possesses the knowledge, skills, and abilities to perform this job function correctly the first time, safely and compliantly.

In addition, the individual recommending qualification of the candidate has completed the quality validation of this document in accordance with the requirements in MP-DOCS-18.2. (Guidance is given in the Training/Evaluation Standard)

VEE Lead or SME		4-24-14
Title	Signature	Date

Upon satisfactory completion of this qualification package, the Level I Validation Manager may grant Qualification to the trainee on the front cover of this qualification package.

DIVIDER

PAGE

AMWTP Advanced Mixed Waste Treatment Project	*Advanced Mixed Waste Treatment Project* *REQUALIFICATION CHECKLIST* *Level I Validation Independent Technical Reviewer for Visual Examination*	**QCITR0VE** **Rev 0**

Employee Name Denise Lee S# 41645

Level I Validation ITR for Visual Examination

Requalification Checklist #: QCITR0VE

The manager granting qualification acknowledges that the employee possesses the knowledge, skills, and abilities to perform this job function correctly the first time, safely and compliantly.

Qualification granted by: **TRU Programs Mgr.**	George Byram	George R	3/11/14
Manager Title	Print Name	Signature	Date

Form-1268, Production System Access Request, has been submitted for the appropriate WTS role(s) for this individual.	Denise K Lee	Denise K Lee	3/11/14
Title	Print Name	Signature	Date

Required Attachments: Check box if attached	Written Exam ☐	Remedial Form ☐	Exception Form ☐ (If used)

Qual Pack Issued By :	Amy Betzer	Amy Betzer	3/25/14
	Print Name	Signature	Date

TRAINING DEPT.
MAR 11 2014

Qualification Checklist Approval Section Initials: AB

Line Manager Approval	Sue Peterman	Signature on File	1/24/12
	Print Name	Signature	Date

Training Manager Approval	Mike Parrish	Signature on File	1/26/12
	Print Name	Signature	Date

AMWTP Advanced Mixed Waste Treatment Project	*Advanced Mixed Waste Treatment Project* *REQUALIFICATION CHECKLIST* *Level I Validation Independent Technical Reviewer for Visual Examination*	**QCITR0VE** **Rev 0**

Employee Name Denise Lee S# 61645

Revision History			
Revision Number	Affected Pages	Description of Change	Date
0	All	The ITR qualification was previously contained in one checklist (QPITR3A) which incorporated ITR duties for VE, Solid Sampling/Coring, and RTR batch validation. Those ITR duties have now been split into three separate checklists for each ITR area.	1/26/12

Modification Record				
Mod Letter	Affected Pages	Description of Change	Management Approval *	Date
0A	8	Items 5.5 and 5.6: Change procedural reference to MP-EP&C-12.16	S Peterman (signature on file)	5/3/12

* Manager signature required for modifications.

AMWTP Advanced Mixed Waste Treatment Project	*Advanced Mixed Waste Treatment Project* *REQUALIFICATION CHECKLIST* *Level I Validation Independent Technical Reviewer for Visual Examination*	**QCITR0VE** **Rev 0**

Employee Name Denise K. Lee S# 616645

Signature Roster
Personnel signing blocks in this qualification package must print their name legibly, sign and initial. Signature by Evaluators indicates they have used the Training/Evaluation Standard and performed evaluations IAW MP-RTQP-14.13. Copy this sheet if necessary.

Name (Printed)	Signature	Initials
Amy Betzer	Amy Betzer	AB
George Byram	George Byram	GB
Ron Grise	Ron Grise	RG

1.0 Scope

This requalification checklist is developed to provide assurance that an individual performing Level I Validation of Sampling, RTR, or VE batch data in accordance with the requirements of MP-TRUW-8.2, Quality Assurance Project Plan, is qualified to perform the tasks associated with that function. This requalification is used for personnel performing ITR activities associated with these batches at AMWTP and who are currently qualified in the prerequisite qualifications listed below. This requalification document provides the candidate with a comprehensive foundation in the knowledge and skills required for compliant task performance. This qualification expires 24 months from the grant date.

Maintaining this qualification requires the individual to maintain current qualification in QPVE0001 (Visual Examiner). Recurring training must be completed prior to expiration.

Extended absences, identified training expires, failure of recurring proficiency/performance exams, performance deficiencies, etc. may result in disqualification of the individual until any or all conditions are remediated.

AMWTP Advanced Mixed Waste Treatment Project	*Advanced Mixed Waste Treatment Project* *REQUALIFICATION CHECKLIST* *Level I Validation Independent Technical Reviewer for Visual Examination*	**QCITR0VE** **Rev 0**

Employee Name Denise Lee S# 161645

2.0 **Prerequisites**
Ensure the trainee has successfully completed the requirements listed below before completing this qualification checklist.
The Employee Position Description (EPD), Form-1018 has been reviewed or a new one completed to ensure the duties of this position are included and to verify the education and experience requirements have been satisfied. (MP-RTQP-14.1). The employees Individual Training Plan (ITP), Form-1020, is current, or has been updated, to include the appropriate RCRA Profile and all general courses required for individuals performing Level I Validation activities. The ITP also includes the qualification checklists for all applicable equipment that will be used by operators in this job scope. The employee has completed all initial training *and is current* on the applicable qualifications / checklists listed on the ITP to support this qualification package. George Bu — Employee's Production Manager — 2/25/14 Date

		Date Requirement Was Completed	**Signature** (Training Specialist or ITR Lead)	**Date**
2.1	Current QPVE0001, Visual Examiner	7/15/13	Amy Bethel	2/25/14
2.2	QCITR0VE, Level I Validation Independent Technical Reviewer For Visual Examination OR QPITR3A, Level I Validation	3/21/12	Amy Bethel	2/25/14

Employee Name Denise Lee S# 101645

3.0	**Initial & Continuing Training / Knowledge / Required Reading**

The initial training courses identified pertain to the job function/duties and will be verified complete by the ITR Lead or a Training Representative.

3.1	Training Courses (Indicate Courses that are Recurring):	Date Requirement was Complete	Recurring Training /Qualification Frequency
3.1.1	None	N/A	N/A

Sign-off by the ITR Lead indicates that each required reading has been reviewed IAW with the Training/Evaluation Standard and that the Trainee demonstrates a satisfactory understanding of how it pertains to their job responsibilities

3.2	Required Reading: Operating Instructions	ITR Lead Signature	Date
3.2.1	None	N/A	N/A

3.3	Required Reading: Other Documents	ITR Lead Signature	Date
3.3.1	None	N/A	N/A

AMWTP Advanced Mixed Waste Treatment Project	*Advanced Mixed Waste Treatment Project* *REQUALIFICATION CHECKLIST* *Level I Validation Independent Technical Reviewer for Visual Examination*	**QCITR0VE** **Rev 0**

Employee Name Denise Lee S# 161645

Sign-off by the ITR Lead indicates that each knowledge item has been reviewed IAW with the Training/Evaluation Standard and that the Trainee demonstrates a satisfactory understanding of how it pertains to their job responsibilities.

3.4 Knowledge:	ITR Lead Signature or as indicated	Date
3.4.1 Discuss any recent changes to the WTS System and how it applies to tasks covered in this qualification checklist.	Ron A	3-10-14
3.4.2 Discuss any lessons learned regarding Level I Validation activities that have occurred within the past 24 months. Lessons Learned Discussed: _____	Ron A	3-10-14

AMWTP Advanced Mixed Waste Treatment Project	*Advanced Mixed Waste Treatment Project* *REQUALIFICATION CHECKLIST* *Level I Validation Independent Technical Reviewer for Visual Examination*	**QCITR0VE** **Rev 0**

Employee Name Denise Lee S# 601645

4.0 OJT Training Objectives

The elements below are to be performed (P), simulated (S), or discussed (D) as indicated. If there are two or more choices (P, S, or D), then circle which one was used.

Sign-off by the ITR Lead indicates successful performance of the task. If the trainee cannot perform the task without coaching, terminate the Performance Assessment.

	P S D	ITR OJT or TRU Programs Mgr. Signature & date

4.1 **VE ITR Tasks**		
4.1.1 Verify the presence or absence of prohibited items has been properly identified.	P (S) D	3-10-14
4.1.2 Discuss the scenarios when it would be appropriate to generate an NCR. • Containers that have prohibited items • Containers that fail to meet DQOs or QAOs • Containers that have a physical form, WMC, or IDC that does not match the waste stream description.	P S (D)	3-10-14
4.1.3 Discuss the appropriate actions to take if you discover that an NCR has not been generated for those items listed in the previous step.	P S (D)	3-10-14

AMWTP Advanced Mixed Waste Treatment Project	*Advanced Mixed Waste Treatment Project* *REQUALIFICATION CHECKLIST* *Level I Validation Independent Technical Reviewer for Visual Examination*	**QCITR0VE** **Rev 0**

Employee Name Denise Lee S# le1645

5.0 ***Emergency / Abnormal Conditions***
The elements below are to be simulated (S) or discussed (D) as indicated. If both S and D are indicated, then circle which one was used. Sign-off by the evaluator indicates successful performance of the task. If the trainee cannot perform the task without coaching, terminate the Performance Assessment.

		S D	ITR OJT or TRU Programs Mgr. Signature & date	Date
5.1	Fire / Alarm	(S) D		3-10-14
5.2	Location of fire extinguishers / fire alarm boxes	S (D)		3-10-14
5.3	Spill / Contamination Release (MP-EC&P-7.10)	S (D)		3-10-14
5.4	Injured Person	S (D)		3-10-14
5.5	Evacuation (MP-EP&C-12.716) Mod. 0A	S (D)		3-10-14
5.6	Take Cover (MP-EP&C-12.716) Mod. 0A	S (D)		3-10-14

AMWTP Advanced Mixed Waste Treatment Project	*Advanced Mixed Waste Treatment Project* *REQUALIFICATION CHECKLIST* *Level I Validation Independent Technical Reviewer for Visual Examination*	**QCITR0VE** **Rev 0**

Employee Name Denise Lee S# 161645

6.0 **Examinations** (Sections 1-5 must be complete prior to testing)		
Written Exam (80% required to pass) Exam #: 1 Score: 80% *(If first exam is failed the supervisor must assign remedial training)* Form-1039 attached ☐ (check box when completed form-1039 is attached. Not required if first exam is passed.) Re-exam # _____ Score:_____ (N/A if first exam is passed with 80% or greater)		
Exam Passed	Amy Roths Exam Proctor Signature	3/11/14 Date

7.0 **Recommendation for Qualification**		
After discussion with the candidate concerning this job scope, the ITR Lead or TRU Programs Mgr. acknowledges that the trainee possesses the knowledge, skills, and abilities to perform this job function correctly the first time, safely and compliantly. In addition, the ITR Lead or TRU Programs Mgr. has completed the quality validation of this document in accordance with the requirements in MP-DOCS-18.2. (Guidance is given in the Training/Evaluation Standard)		
ITR Lead or TRU Programs Mgr. Title	George Dyer Signature	3/11/14 Date

Upon satisfactory completion of this requalification checklist, the TRU Programs Manager may grant Qualification to the trainee on the front cover of this qualification checklist.

AMWTP Advanced Mixed Waste Treatment Project	*Advanced Mixed Waste Treatment Project* *REQUALIFICATION CHECKLIST* *Level I Validation Independent Technical Reviewer for Visual Examination*	**QCITR0VE** **Rev 0**

Employee Name Chad Waslow S# 71479

Level I Validation ITR for Visual Examination

Requalification Checklist #: QCITR0VE

The manager granting qualification acknowledges that the employee possesses the knowledge, skills, and abilities to perform this job function correctly the first time, safely and compliantly.

Qualification granted by: **TRU Programs Mgr.**	George Byram	George Byram	3/12/14
Manager Title	Print Name	Signature	Date

Form-1268, Production System Access Request, has been submitted for the appropriate WTS role(s) for this individual.	Chad Waslow	Chad Waslow	03-12-14
Title	Print Name	Signature	Date

Required Attachments: Check box if attached	Written Exam ☐	Remedial Form ☐	Exception Form ☐ (If used)

Qual Pack Issued By :	Dave Butler	Dave Butler	1/6/14
	Print Name	Signature	Date

Qualification Checklist Approval Section

Line Manager Approval	Sue Peterman	Signature on File	1/24/12
	Print Name	Signature	Date

Training Manager Approval	Mike Parrish	Signature on File	1/26/12
	Print Name	Signature	Date

TRAINING DEPT.
MAR 12 2014
Initials: AB

QC 3/13/14

AMWTP Advanced Mixed Waste Treatment Project	*Advanced Mixed Waste Treatment Project* *REQUALIFICATION CHECKLIST* *Level I Validation Independent Technical Reviewer for Visual Examination*	**QCITR0VE** **Rev 0**

Employee Name Chad Wasylow S# 71479

Revision History			
Revision Number	Affected Pages	Description of Change	Date
0	All	The ITR qualification was previously contained in one checklist (QPITR3A) which incorporated ITR duties for VE, Solid Sampling/Coring, and RTR batch validation. Those ITR duties have now been split into three separate checklists for each ITR area.	1/26/12

Modification Record				
Mod Letter	Affected Pages	Description of Change	Management Approval *	Date
0A	8	Items 5.5 and 5.6: Change procedural reference to MP-EP&C-12.16	S Peterman (signature on file)	5/3/12

* Manager signature required for modifications.

AMWTP Advanced Mixed Waste Treatment Project	*Advanced Mixed Waste Treatment Project* *REQUALIFICATION CHECKLIST* *Level I Validation Independent Technical Reviewer for Visual Examination*	**QCITR0VE** **Rev 0**

Employee Name Chad Wasylow S# 71479

Signature Roster

Personnel signing blocks in this qualification package must print their name legibly, sign and initial. Signature by Evaluators indicates they have used the Training/Evaluation Standard and performed evaluations IAW MP-RTQP-14.13. Copy this sheet if necessary.

Name (Printed)	Signature	Initials
Dave Butler	Dave Butler	DB
George Byram	George Byram	GB
Ron Grise	Ron Grise	RG
Amy Betzer	Amy Betzer	AB

1.0 Scope

This requalification checklist is developed to provide assurance that an individual performing Level I Validation of Sampling, RTR, or VE batch data in accordance with the requirements of MP-TRUW-8.2, Quality Assurance Project Plan, is qualified to perform the tasks associated with that function. This requalification is used for personnel performing ITR activities associated with these batches at AMWTP and who are currently qualified in the prerequisite qualifications listed below. This requalification document provides the candidate with a comprehensive foundation in the knowledge and skills required for compliant task performance. This qualification expires 24 months from the grant date.

Maintaining this qualification requires the individual to maintain current qualification in QPVE0001 (Visual Examiner). Recurring training must be completed prior to expiration.

Extended absences, identified training expires, failure of recurring proficiency/performance exams, performance deficiencies, etc. may result in disqualification of the individual until any or all conditions are remediated.

AMWTP Advanced Mixed Waste Treatment Project	*Advanced Mixed Waste Treatment Project* *REQUALIFICATION CHECKLIST* *Level I Validation Independent Technical Reviewer for Visual Examination*	**QCITR0VE** **Rev 0**

Employee Name Chad Wasylow S# 71479

2.0 Prerequisites

Ensure the trainee has successfully completed the requirements listed below before completing this qualification checklist.

The Employee Position Description (EPD), Form-1018 has been reviewed or a new one completed to ensure the duties of this position are included and to verify the education and experience requirements have been satisfied. (MP-RTQP-14.1).

The employees Individual Training Plan (ITP), Form-1020, is current, or has been updated, to include the appropriate RCRA Profile and all general courses required for individuals performing Level I Validation activities.

The ITP also includes the qualification checklists for all applicable equipment that will be used by operators in this job scope.

The employee has completed all initial training *and is current* on the applicable qualifications / checklists listed on the ITP to support this qualification package.

Employee's Production Manager — Date: 2/18/14

		Date Requirement Was Completed	**Signature** (Training Specialist or ITR Lead)	**Date**
2.1	Current QPVE0001, Visual Examiner	3/19/12		1-6-14
2.2	QCITR0VE, Level I Validation Independent Technical Reviewer For Visual Examination OR QPITR3A, Level I Validation	3/26/12		1-6-14

Employee Name Chad Wasylow S# 71479

3.0 Initial & Continuing Training / Knowledge / Required Reading

The initial training courses identified pertain to the job function/duties and will be verified complete by the ITR Lead or a Training Representative.

3.1 Training Courses (Indicate Courses that are Recurring):	Date Requirement was Complete	Recurring Training /Qualification Frequency
3.1.1 None	N/A	N/A

Sign-off by the ITR Lead indicates that each required reading has been reviewed IAW with the Training/Evaluation Standard and that the Trainee demonstrates a satisfactory understanding of how it pertains to their job responsibilities

3.2 Required Reading: Operating Instructions	ITR Lead Signature	Date
3.2.1 None	N/A	N/A

3.3 Required Reading: Other Documents	ITR Lead Signature	Date
3.3.1 None	N/A	N/A

AMWTP Advanced Mixed Waste Treatment Project	Advanced Mixed Waste Treatment Project REQUALIFICATION CHECKLIST Level I Validation Independent Technical Reviewer for Visual Examination	QCITR0VE Rev 0

Employee Name Chad Wasylow S# 71479

Sign-off by the ITR Lead indicates that each knowledge item has been reviewed IAW with the Training/Evaluation Standard and that the Trainee demonstrates a satisfactory understanding of how it pertains to their job responsibilities.

3.4 Knowledge:	ITR Lead Signature or as indicated	Date
3.4.1 Discuss any recent changes to the WTS System and how it applies to tasks covered in this qualification checklist.	Ron A	3-11-14
3.4.2 Discuss any lessons learned regarding Level I Validation activities that have occurred within the past 24 months. Lessons Learned Discussed: Fire Extinguisher	Ron A	3-11-14

AMWTP Advanced Mixed Waste Treatment Project	*Advanced Mixed Waste Treatment Project* *REQUALIFICATION CHECKLIST* *Level I Validation Independent Technical Reviewer for Visual Examination*	**QCITR0VE** **Rev 0**

Employee Name Chad Wasylow S# 71479

4.0 OJT Training Objectives

The elements below are to be performed (P), simulated (S), or discussed (D) as indicated. If there are two or more choices (P, S, or D), then circle which one was used.

Sign-off by the ITR Lead indicates successful performance of the task. If the trainee cannot perform the task without coaching, terminate the Performance Assessment.

	P S D	ITR OJT or TRU Programs Mgr. Signature & date
4.1 VE ITR Tasks		
4.1.1 Verify the presence or absence of prohibited items has been properly identified.	P (S)	Ron A 3-11-14
4.1.2 Discuss the scenarios when it would be appropriate to generate an NCR. • Containers that have prohibited items • Containers that fail to meet DQOs or QAOs • Containers that have a physical form, WMC, or IDC that does not match the waste stream description.	(D)	Ron A 3-11-14
4.1.3 Discuss the appropriate actions to take if you discover that an NCR has not been generated for those items listed in the previous step.	(D)	Ron A 3-11-14

AMWTP Advanced Mixed Waste Treatment Project	*Advanced Mixed Waste Treatment Project* *REQUALIFICATION CHECKLIST* *Level I Validation Independent Technical Reviewer for Visual Examination*	**QCITR0VE** **Rev 0**

Employee Name Chad Wasylow S# 71479

5.0 *Emergency / Abnormal Conditions*

The elements below are to be simulated (S) or discussed (D) as indicated. If both S and D are indicated, then circle which one was used.

Sign-off by the evaluator indicates successful performance of the task. If the trainee cannot perform the task without coaching, terminate the Performance Assessment.

		S D	ITR OJT or TRU Programs Mgr. Signature & date	Date
5.1	Fire / Alarm	S (D)		3-11-14
5.2	Location of fire extinguishers / fire alarm boxes	S (D)		3-11-14
5.3	Spill / Contamination Release (MP-EC&P-7.10)	S (D)		3-11-14
5.4	Injured Person	S (D)		3-11-14
5.5	Evacuation (MP-EP&C-12.~~7~~16) Mod. 0A	S (D)		3-11-14
5.6	Take Cover (MP-EP&C-12.~~7~~16) Mod. 0A	S (D)		3-11-14

AMWTP Advanced Mixed Waste Treatment Project	*Advanced Mixed Waste Treatment Project* *REQUALIFICATION CHECKLIST* *Level I Validation Independent Technical Reviewer for Visual Examination*	**QCITR0VE** **Rev 0**

Employee Name Chad Wasylow S# 71479

6.0 Examinations (Sections 1-5 must be complete prior to testing)

Written Exam (80% required to pass)

Exam #: 1 Score: 85%

(If first exam is failed the supervisor must assign remedial training)

Form-1039 attached ☐ (check box when completed form-1039 is attached. Not required if first exam is passed.)

Re-exam # _____ Score:_____ (N/A if first exam is passed with 80% or greater)

Exam Passed	Amy Betts	3/12/14
	Exam Proctor Signature	Date

7.0 Recommendation for Qualification

After discussion with the candidate concerning this job scope, the ITR Lead or TRU Programs Mgr. acknowledges that the trainee possesses the knowledge, skills, and abilities to perform this job function correctly the first time, safely and compliantly.

In addition, the ITR Lead or TRU Programs Mgr. has completed the quality validation of this document in accordance with the requirements in MP-DOCS-18.2. (Guidance is given in the Training/Evaluation Standard)

ITR Lead or TRU Programs Mgr.	Geoff Bly	3/12/14
Title	Signature	Date

Upon satisfactory completion of this requalification checklist, the TRU Programs Manager may grant Qualification to the trainee on the front cover of this qualification checklist.

AMWTP Advanced Mixed Waste Treatment Project	*Advanced Mixed Waste Treatment Project* *REQUALIFICATION CHECKLIST* *Level I Validation Independent Technical Reviewer for Visual Examination*	**QCITR0VE** **Rev 0**

Employee Name Roe Thompson S# 103093

Level I Validation ITR for Visual Examination

Requalification Checklist #: QCITR0VE

The manager granting qualification acknowledges that the employee possesses the knowledge, skills, and abilities to perform this job function correctly the first time, safely and compliantly.

Qualification granted by: **TRU Programs Mgr.**	George Byram	George Byram	7/28/14
Manager Title	Print Name	Signature	Date

Form-1268, Production System Access Request, has been submitted for the appropriate WTS role(s) for this individual.	Steve Tallman	SLTall	7/28/14
Title	Print Name	Signature	Date

Required Attachments: Check box if attached	Written Exam ☐	Remedial Form ☐	Exception Form ☐ (If used)

TRAINING DEPT. JUL 28 2014 Initials: AB

Qual Pack Issued By :	Amy Betzer	Amy Betzer	7/9/14
	Print Name	Signature	Date

Qualification Checklist Approval Section

Line Manager Approval	Sue Peterman	Signature on File	1/24/12
	Print Name	Signature	Date

Training Manager Approval	Mike Parrish	Signature on File	1/26/12
	Print Name	Signature	Date

AMWTP Advanced Mixed Waste Treatment Project	*Advanced Mixed Waste Treatment Project* *REQUALIFICATION CHECKLIST* *Level I Validation Independent Technical Reviewer for Visual Examination*	**QCITR0VE** **Rev 0**

Employee Name Roe Thompson S# 103095

Revision History

Revision Number	Affected Pages	Description of Change	Date
0	All	The ITR qualification was previously contained in one checklist (QPITR3A) which incorporated ITR duties for VE, Solid Sampling/Coring, and RTR batch validation. Those ITR duties have now been split into three separate checklists for each ITR area.	1/26/12

Modification Record

Mod Letter	Affected Pages	Description of Change	Management Approval *	Date
0A	8	Items 5.5 and 5.6: Change procedural reference to MP-EP&C-12.16	S Peterman (signature on file)	5/3/12

* Manager signature required for modifications.

AMWTP Advanced Mixed Waste Treatment Project	*Advanced Mixed Waste Treatment Project* *REQUALIFICATION CHECKLIST* *Level I Validation Independent Technical Reviewer for Visual Examination*	**QCITR0VE** **Rev 0**

Employee Name Roe Thompson S# 103095

Signature Roster
Personnel signing blocks in this qualification package must print their name legibly, sign and initial. Signature by Evaluators indicates they have used the Training/Evaluation Standard and performed evaluations IAW MP-RTQP-14.13. Copy this sheet if necessary.

Name (Printed)	Signature	Initials
Amy Batzer	Amy Batzer	AB
Ron Grise	Ron Grise	RG
George Dyram	George Dyram	GB

1.0 Scope

This requalification checklist is developed to provide assurance that an individual performing Level I Validation of Sampling, RTR, or VE batch data in accordance with the requirements of MP-TRUW-8.2, Quality Assurance Project Plan, is qualified to perform the tasks associated with that function. This requalification is used for personnel performing ITR activities associated with these batches at AMWTP and who are currently qualified in the prerequisite qualifications listed below. This requalification document provides the candidate with a comprehensive foundation in the knowledge and skills required for compliant task performance. This qualification expires 24 months from the grant date.

Maintaining this qualification requires the individual to maintain current qualification in QPVE0001 (Visual Examiner). Recurring training must be completed prior to expiration.

Extended absences, identified training expires, failure of recurring proficiency/performance exams, performance deficiencies, etc. may result in disqualification of the individual until any or all conditions are remediated.

AMWTP Advanced Mixed Waste Treatment Project	*Advanced Mixed Waste Treatment Project* *REQUALIFICATION CHECKLIST* *Level I Validation Independent Technical Reviewer for Visual Examination*	**QCITR0VE** **Rev 0**

Employee Name Roe Thompson S# 103095

2.0 Prerequisites

Ensure the trainee has successfully completed the requirements listed below before completing this qualification checklist.

The Employee Position Description (EPD), Form-1018 has been reviewed or a new one completed to ensure the duties of this position are included and to verify the education and experience requirements have been satisfied. (MP-RTQP-14.1).

The employees Individual Training Plan (ITP), Form-1020, is current, or has been updated, to include the appropriate RCRA Profile and all general courses required for individuals performing Level I Validation activities.

The ITP also includes the qualification checklists for all applicable equipment that will be used by operators in this job scope.

The employee has completed all initial training *and is current* on the applicable qualifications / checklists listed on the ITP to support this qualification package.

Gary Bu — Employee's Production Manager — 7/28/14 Date

		Date Requirement Was Completed	**Signature** (Training Specialist or ITR Lead)	**Date**
2.1	Current QPVE0001, Visual Examiner	9/25/12	Amy Bates	7/9/14
2.2	QCITR0VE, Level I Validation Independent Technical Reviewer For Visual Examination OR QPITR3A, Level I Validation	8/7/12	Amy Bates	7/9/14

Employee Name Roe Thompson S# 103095

3.0 Initial & Continuing Training / Knowledge / Required Reading

The initial training courses identified pertain to the job function/duties and will be verified complete by the ITR Lead or a Training Representative.

3.1	Training Courses (Indicate Courses that are Recurring):	Date Requirement was Complete	Recurring Training /Qualification Frequency
3.1.1	None	N/A	N/A

Sign-off by the ITR Lead indicates that each required reading has been reviewed IAW with the Training/Evaluation Standard and that the Trainee demonstrates a satisfactory understanding of how it pertains to their job responsibilities

3.2	Required Reading: Operating Instructions	ITR Lead Signature	Date
3.2.1	None	N/A	N/A

3.3	Required Reading: Other Documents	ITR Lead Signature	Date
3.3.1	None	N/A	N/A

AMWTP Advanced Mixed Waste Treatment Project	*Advanced Mixed Waste Treatment Project* *REQUALIFICATION CHECKLIST* *Level I Validation Independent Technical Reviewer for Visual Examination*	**QCITR0VE** **Rev 0**

Employee Name Roe Thompson S# 103095

Sign-off by the ITR Lead indicates that each knowledge item has been reviewed IAW with the Training/Evaluation Standard and that the Trainee demonstrates a satisfactory understanding of how it pertains to their job responsibilities.

3.4 Knowledge:	ITR Lead Signature or as indicated	Date
3.4.1 Discuss any recent changes to the WTS System and how it applies to tasks covered in this qualification checklist.	Ron A	7-11-14
3.4.2 Discuss any lessons learned regarding Level I Validation activities that have occurred within the past 24 months. Lessons Learned Discussed: Check IDC changes to make sure there correct	Ron A	7-11-14

AMWTP Advanced Mixed Waste Treatment Project	*Advanced Mixed Waste Treatment Project* *REQUALIFICATION CHECKLIST* *Level I Validation Independent Technical Reviewer for Visual Examination*	**QCITR0VE** **Rev 0**

Employee Name Roe Thompson S# 103095

4.0 OJT Training Objectives

The elements below are to be performed (P), simulated (S), or discussed (D) as indicated. If there are two or more choices (P, S, or D), then circle which one was used.

Sign-off by the ITR Lead indicates successful performance of the task. If the trainee cannot perform the task without coaching, terminate the Performance Assessment.

	P S D	ITR OJT or TRU Programs Mgr. Signature & date
4.1 VE ITR Tasks		
4.1.1 Verify the presence or absence of prohibited items has been properly identified.	(P) S	7-11-14
4.1.2 Discuss the scenarios when it would be appropriate to generate an NCR. • Containers that have prohibited items • Containers that fail to meet DQOs or QAOs • Containers that have a physical form, WMC, or IDC that does not match the waste stream description.	(D)	7-11-14
4.1.3 Discuss the appropriate actions to take if you discover that an NCR has not been generated for those items listed in the previous step.	(D)	7-11-14

AMWTP Advanced Mixed Waste Treatment Project	*Advanced Mixed Waste Treatment Project* *REQUALIFICATION CHECKLIST* *Level I Validation Independent Technical Reviewer for Visual Examination*	**QCITR0VE** **Rev 0**

Employee Name Roe Thompson S# 103095

5.0 ***Emergency / Abnormal Conditions***
The elements below are to be simulated (S) or discussed (D) as indicated. If both S and D are indicated, then circle which one was used. Sign-off by the evaluator indicates successful performance of the task. If the trainee cannot perform the task without coaching, terminate the Performance Assessment.

		S D	ITR OJT or TRU Programs Mgr. Signature & date	Date
5.1	Fire / Alarm	S (D)		7-11-14
5.2	Location of fire extinguishers / fire alarm boxes	S (D)		7-11-14
5.3	Spill / Contamination Release (MP-EC&P-7.10)	S (D)		7-11-14
5.4	Injured Person	S (D)		7-11-14
5.5	Evacuation (MP-EP&C-12.716) Mod. 0A	S (D)		7-11-14
5.6	Take Cover (MP-EP&C-12.716) Mod. 0A	S (D)		7-11-14

AMWTP Advanced Mixed Waste Treatment Project	*Advanced Mixed Waste Treatment Project* *REQUALIFICATION CHECKLIST* *Level I Validation Independent Technical Reviewer for Visual Examination*	**QCITR0VE** **Rev 0**

Employee Name Roe Thompson S# 103095

6.0 **Examinations** (Sections 1-5 must be complete prior to testing)		
Written Exam (80% required to pass) Exam #: 1 Score: 90% *(If first exam is failed the supervisor must assign remedial training)* Form-1039 attached ☐ (check box when completed form-1039 is attached. Not required if first exam is passed.) Re-exam # N/A Score: N/A (N/A if first exam is passed with 80% or greater)		
Exam Passed	Amy Betts Exam Proctor Signature	7/24/14 Date

7.0 **Recommendation for Qualification**		
After discussion with the candidate concerning this job scope, the ITR Lead or TRU Programs Mgr. acknowledges that the trainee possesses the knowledge, skills, and abilities to perform this job function correctly the first time, safely and compliantly. In addition, the ITR Lead or TRU Programs Mgr. has completed the quality validation of this document in accordance with the requirements in MP-DOCS-18.2. (Guidance is given in the Training/Evaluation Standard)		
ITR Lead or TRU Programs Mgr. Title	George D Signature	7/28/14 Date

Upon satisfactory completion of this requalification checklist, the TRU Programs Manager may grant Qualification to the trainee on the front cover of this qualification checklist.

AMWTP Advanced Mixed Waste Treatment Project	*Advanced Mixed Waste Treatment Project* *REQUALIFICATION PACKAGE* *Visual Examiner*	QPVE0001 Rev. 4

Employee Name Craig Simmons S# 58429

VISUAL EXAMINER

Requalification Package Number: QPVE0001

The manager granting qualification acknowledges that the employee possesses the knowledge, skills, and abilities to perform this job function correctly the first time, safely and compliantly.

Qualification granted by:	George Dyer	George Byram	7/15/13
Production Manager	Print Name	Signature	Date

Form-1268, Production System Access Request, has been submitted for the appropriate WTS role(s) for this individual.	Craig Simmons	Craig Simmons	7/15/13
	Print Name	Signature	Date

Required Attachments: Check box if attached	Remedial Form ☐ (If used)	Exception Form ☐ (If used)

Qual Pack Issued By :	Dave Butler	Dave Butler	5/3/13
	Print Name	Signature	Date

Qualification Package Approval Section

Line Manager Approval	S. Peterman	Signature on file	10/2/2012
	Print Name	Signature	Date

Training Manager Approval	Todd Golberg	Signature on file	10/2/2012
	Print Name	Signature	Date

TRAINING DEPT

JUL 15 2013

Initials _____

AMWTP Advanced Mixed Waste Treatment Project	*Advanced Mixed Waste Treatment Project* *REQUALIFICATION PACKAGE* *Visual Examiner*	QPVE0001 Rev. 4

Employee Name Craig Simmons S# 58429

Revision History			
Revision Number	Affected Pages	Description of Change	Date
0	All	Initial Issue. QPVE0001 was generated to replace QPOT4B and FQPOT10A. QPVEE0002 and QPVE0003 were generated as delta qualification for personnel who were current in QPOT4B and FQPOT10A.	05/30/07
1	All	Update the VE qual. pack to meet new WIPP 311 Permit Modifications. Retire QP-OT-4B Characterization VE; FQP-OT-10A Facility VE; QCCVEFVE Characterization Visual Examination Operators to qualify as Facility Visual Examination Operators; QPVE0002 Pre-Qualified Visual Examiner; and QPVE0003 Pre-Qualified Visual Examiner.	05/30/08
2	All	Revised JTAL to make more specific to VE tasks.	03/04/09
3	All	Made editorial changes. Updated format and incorporated evaluation standard.	3/29/10
4	All	Periodic review and update.	10/2/12

Mod Letter	Affected Pages	Description of Change	Management Approval *	Date

* Manager signature required for modifications.

AMWTP Advanced Mixed Waste Treatment Project	*Advanced Mixed Waste Treatment Project* *REQUALIFICATION PACKAGE* *Visual Examiner*	QPVE0001 Rev. 4

Employee Name Craig Simmons S# 58429

Signature Roster

Personnel signing blocks in this qualification package must print their name legibly, sign and initial. Signature by Evaluators indicates they have used the Training/Evaluation Standard and performed evaluations IAW MP-RTQP-14.13. Copy this sheet if necessary.

Name (Printed)	Signature	Initials
Dave Butler	Dave Butler	DB
Ron Grise	Ron Grise	RG
George Byram	George Byram	GB
Aaron Buckskin	Aaron Buckskin	AB
Gaylen Schaldt	Gaylen Schaldt	GS
Craig Simmons	Craig Simmons	CS

AMWTP Advanced Mixed Waste Treatment Project	Advanced Mixed Waste Treatment Project REQUALIFICATION PACKAGE Visual Examiner	QPVE0001 Rev. 4

Employee Name Craig Simmons S# 58429

1.0 Scope

This requalification package assures the knowledge and skill requirements for personnel performing VE at AMWTP are maintained. This requalification is valid for 24 months, after which, another requalification checklist must be completed to maintain qualification status.

Individuals may be disqualified for any of the following: Extended absence, identified training expires, failure of recurring proficiency/performance exams, performance deficiencies, etc. as applicable.

2.0 Prerequisites

Ensure the trainee has successfully completed the requirements listed below before completing this requalification package.

The employee has completed all initial training *and is current* on the applicable qualifications / checklists listed on the ITP to support this qualification package.

Employee's Production Manager — Date: 7/8/13

	Date Requirement Was Completed	Signature (Training Representative or SS)	Date
2.1 Completion of VE qualification (QPVE0001).	7-19-11	Dave Z	5/3/13

Employee Name Craig Simmons S# 58429

3.0 Initial & Continuing Training / Knowledge / Required Reading

The initial training courses identified pertain to the job function/duties and will be verified complete by the employee's SS, the VEE SME or Lead, or a Training Representative.

3.1 Training Courses (Indicate Courses that are Recurring):	Date Requirement was Complete	Recurring Training /Qualification Frequency
3.1.1 0AWT1118, LLW/MLLW Disposition Plan	2-1-12	24 months
VEE SME or Lead, Training Representative or SS verify training courses are complete:	Signature	Date: 5/3/13

Sign-off by the VEE indicates that each required reading has been reviewed IAW with the Training/Evaluation Standard and that the Trainee demonstrates a satisfactory understanding of how it pertains to their job responsibilities.

3.2 Required Reading: Operating Instructions	VEE	Date
3.2.1 Discuss any recent changes to INST-OI-34 and INST-FOI-17.		7-5-13
3.3 Required Reading: Other Documents	**VEE**	**Date**
3.3.1 None	N/A	N/A

Sign-off by the OJT Instructor or SS indicates that each knowledge item has been reviewed IAW with the Training/Evaluation Standard and that the Trainee demonstrates a satisfactory understanding of how it pertains to their job responsibilities.

3.4 Knowledge:	VEE / SS Signature	Date
3.4.1 Discuss any lessons learned concerning Visual Examination.		7-5-13
3.4.2 Discuss the any applicable Criticality Working Requirements (CWRs).		7-5-13

Employee Name Craig Simmons S# 58429

3.4 Knowledge:	VEE / SS Signature	Date

4.0 OJT Training Objectives

The elements below are to be performed (P), simulated (S), or discussed (D) as indicated. Circle all that apply.

Sign-off by the VEE (as the Evaluator) indicates successful performance of the task. If the trainee cannot perform the task without coaching, terminate the Performance Assessment.

VE Over-Train Performance Objectives		P S D	Evaluator Signature & date
4.1	Generate (enter) examination related data into WTS.	P (S)	7-5-13
4.2	Verify (concur with) examination-related data entered into WTS.	P (S)	7-5-13
4.3	Identify closure methods and layers of confinement.	P (S)	7-5-13
4.4	Discuss how to ensure DQOs are met.	(D)	7-5-13
4.5	Identify packaging configurations.	P (S)	7-5-13
4.6	Assign proper Waste Material Parameters to waste.	P (S)	7-5-13
4.7	Perform weight and volume conversions using procedural aids.	P (S)	7-5-13
4.8	Assign the correct IDC and Waste Matrix Code during the VE process.	P (S)	7-5-13
4.9	Identify the path forward for prohibited and nonconforming items and the associated NCRs.	P (S)	7-5-13
4.10	Identify common and conditional waste items through VE or video.	P (S)	7-5-13
4.11	Identify packaging and waste materials.	P (S)	7-5-13

AMWTP Advanced Mixed Waste Treatment Project	*Advanced Mixed Waste Treatment Project* *REQUALIFICATION PACKAGE* *Visual Examiner*	QPVE0001 Rev. 4

Employee Name Craig Simmons S# 58429

VE Over-Train Performance Objectives		P S D	Evaluator Signature & date
4.12	Identify prohibited and suspect items through VE or video.	P(S)	7-5-13
4.13	Assign correct IDCs for newly generated secondary waste and compacted waste.	P(S)	7-5-13
4.14	Estimate volumes and nominal densities of waste.	P(S)	7-5-13
4.15	Identify rigid liner types and their status and condition.	P(S)	7-5-13
4.16	Identify filter models and update WTS for filter removal/insertion on the Container Filters screen.	P(S)	7-5-13
4.17	Perform Newly Generated Waste (NGW) package VE.	P(S)	7-5-13
4.18	Perform Newly Generated Waste Closure VE.	P(S)	7-5-13
4.19	Perform VE of Legacy Waste.	P(S)	7-5-13
4.20	Perform Boxline VE (BiD).	P(S)	7-5-13
4.21	Perform Boxline VE (DiD) using volume estimates and nominal densities.	P(S)	7-5-13
4.22	Perform RTR VE Update (RVU) for Prohibited Item removal (using volume estimates and nominal densities).	P(S)	7-5-13
4.23	Perform RVU for the final configuration of a Coring Drum.	P(S)	7-5-13
4.24	Perform RVU for the final configuration of a Treatment Drum.	P(S)	7-5-13
4.25	Perform an update of an NCR for Treatment or the removal of suspect / prohibited items.	P(S)	7-5-13

Employee Name Craig Simmons S# 58429

5.0 Emergency / Abnormal Conditions

The elements below are to be simulated (S) or discussed (D) as indicated. If both S and D are indicated, then circle which one was used.

Sign-off by the SS indicates successful performance of the task. If the trainee cannot perform the task without coaching, terminate the Performance Assessment.

		P S D	SS Signature	Date
5.1	Fire / Alarm (OI-33, FOI-16, AOI-10, RS&C-6.12)	S (D)		07/13/13
5.2	Location of fire extinguishers / fire alarm boxes in WMF-634, 676, and 628.	S (D)		07/13/13
5.3	Dropped waste container (MP-EC&P-12.9)	S (D)		07/13/13
5.4	Breached Container (INST-OI-11; INST-FOI-20)	S (D)		07/13/13
5.5	CAM Alarm (OI-11, RS&C-6.12)	S (D)		07/13/13
5.6	Spill / Contamination Release (INST-OI-88)	S (D)		07/13/13
5.7	Injured Person (MP-ISIH-2.54, RS&C-6.12)	S (D)		07/13/13
5.8	Loss of ventilation/air system (OI-11, AOI-05, OI-16, OI-33)	S (D)		07/13/13
5.9	Loss of Commercial Power (AOI-04)	S (D)		07/13/13
5.10	Evacuation (EP&C-12.16)	S (D)		07/13/13
5.11	Take Cover (EP&C-12.16)	S (D)		07/13/13

Employee Name Craig Simmons S# 58429

6.0 **Examinations** (Sections 1-5 must be complete prior to testing)	**NO TEST REQUIRED**

7.0 **Recommendation for Requalification**		
After discussion with the candidate concerning this job scope, the Visual Examination Expert (VEE) acknowledges that the trainee possesses the knowledge, skills, and abilities to perform this job function correctly the first time, safely and compliantly. In addition, the VEE has completed the quality validation of this document in accordance with the requirements in MP-DOCS-18.2. (Guidance is given in the Training/Evaluation Standard)		
Visual Examination Expert	Ron A	7-13-13
Title	Signature	Date

Upon satisfactory completion of this qualification package, the Characterization or Facility Production Manager may grant Re-Qualification to the trainee on the front cover of this re-qualification package.

DIVIDER

PAGE

AMWTP Advanced Mixed Waste Treatment Project	Advanced Mixed Waste Treatment Project REQUALIFICATION CHECKLIST Level I Validation Independent Technical Reviewer for Visual Examination	QCITR0VE Rev 0

Employee Name Craig Simmons S# 58429

Level I Validation ITR for Visual Examination

Requalification Checklist #: QCITR0VE

The manager granting qualification acknowledges that the employee possesses the knowledge, skills, and abilities to perform this job function correctly the first time, safely and compliantly.

Qualification granted by:	George Byram	George B	3/12/14
TRU Programs Mgr. Manager Title	Print Name	Signature	Date

Form-1268, Production System Access Request, has been submitted for the appropriate WTS role(s) for this individual.	Craig Simmons	Craig Simmons	3/12/14
Title	Print Name	Signature	Date

Required Attachments: Check box if attached	Written Exam ☑	Remedial Form ☐	Exception Form ☐ (If used)

Qual Pack Issued By :	Amy Betzer	Amy Betzer	2/25/14
	Print Name	Signature	Date

TRAINING DEPT.
MAR 12 2014

Qualification Checklist Approval Section

Initials:

Line Manager Approval	Sue Peterman	Signature on File	1/24/12
	Print Name	Signature	Date

Training Manager Approval	Mike Parrish	Signature on File	1/26/12
	Print Name	Signature	Date

AMWTP Advanced Mixed Waste Treatment Project	*Advanced Mixed Waste Treatment Project* *REQUALIFICATION CHECKLIST* *Level I Validation Independent Technical Reviewer for Visual Examination*	**QCITR0VE** **Rev 0**

Employee Name Craig Simmons S# 58429

Revision History

Revision Number	Affected Pages	Description of Change	Date
0	All	The ITR qualification was previously contained in one checklist (QPITR3A) which incorporated ITR duties for VE, Solid Sampling/Coring, and RTR batch validation. Those ITR duties have now been split into three separate checklists for each ITR area.	1/26/12

Modification Record

Mod Letter	Affected Pages	Description of Change	Management Approval *	Date
0A	8	Items 5.5 and 5.6: Change procedural reference to MP-EP&C-12.16	S Peterman (signature on file)	5/3/12

* Manager signature required for modifications.

AMWTP Advanced Mixed Waste Treatment Project	*Advanced Mixed Waste Treatment Project* *REQUALIFICATION CHECKLIST* *Level I Validation Independent Technical Reviewer for Visual Examination*	**QCITR0VE** **Rev 0**

Employee Name Craig Simmons S# 58429

Signature Roster

Personnel signing blocks in this qualification package must print their name legibly, sign and initial. Signature by Evaluators indicates they have used the Training/Evaluation Standard and performed evaluations IAW MP-RTQP-14.13. Copy this sheet if necessary.

Name (Printed)	Signature	Initials
Amy Betzer	Amy Betzer	AB
George Byram	George Byram	GB
Ron Grise	Ron Grise	RG
Steve Tallman	Steve Tallman	SLT

1.0 Scope

This requalification checklist is developed to provide assurance that an individual performing Level I Validation of Sampling, RTR, or VE batch data in accordance with the requirements of MP-TRUW-8.2, Quality Assurance Project Plan, is qualified to perform the tasks associated with that function. This requalification is used for personnel performing ITR activities associated with these batches at AMWTP and who are currently qualified in the prerequisite qualifications listed below. This requalification document provides the candidate with a comprehensive foundation in the knowledge and skills required for compliant task performance. This qualification expires 24 months from the grant date.

Maintaining this qualification requires the individual to maintain current qualification in QPVE0001 (Visual Examiner). Recurring training must be completed prior to expiration.

Extended absences, identified training expires, failure of recurring proficiency/performance exams, performance deficiencies, etc. may result in disqualification of the individual until any or all conditions are remediated.

AMWTP Advanced Mixed Waste Treatment Project	*Advanced Mixed Waste Treatment Project* *REQUALIFICATION CHECKLIST* *Level I Validation Independent Technical Reviewer for Visual Examination*	**QCITR0VE** **Rev 0**

Employee Name Craig Simmons S# 58429

2.0 Prerequisites

Ensure the trainee has successfully completed the requirements listed below before completing this qualification checklist.

The Employee Position Description (EPD), Form-1018 has been reviewed or a new one completed to ensure the duties of this position are included and to verify the education and experience requirements have been satisfied. (MP-RTQP-14.1).

The employees Individual Training Plan (ITP), Form-1020, is current, or has been updated, to include the appropriate RCRA Profile and all general courses required for individuals performing Level I Validation activities.

The ITP also includes the qualification checklists for all applicable equipment that will be used by operators in this job scope.

The employee has completed all initial training *and is current* on the applicable qualifications / checklists listed on the ITP to support this qualification package.

George Day — Employee's Production Manager — 2/25/14 — Date

		Date Requirement Was Completed	**Signature** (Training Specialist or ITR Lead)	**Date**
2.1	Current QPVE0001, Visual Examiner	7/15/13	Amy Betts	2/25/14
2.2	QCITR0VE, Level I Validation Independent Technical Reviewer For Visual Examination OR QPITR3A, Level I Validation	3/12/12	Amy Betts	2/25/14

Employee Name Craig Simmons S# 58429

3.0 Initial & Continuing Training / Knowledge / Required Reading

The initial training courses identified pertain to the job function/duties and will be verified complete by the ITR Lead or a Training Representative.

3.1	Training Courses (Indicate Courses that are Recurring):	Date Requirement was Complete	Recurring Training /Qualification Frequency
3.1.1	None	N/A	N/A

Sign-off by the ITR Lead indicates that each required reading has been reviewed IAW with the Training/Evaluation Standard and that the Trainee demonstrates a satisfactory understanding of how it pertains to their job responsibilities

3.2	Required Reading: Operating Instructions	ITR Lead Signature	Date
3.2.1	None	N/A	N/A

3.3	Required Reading: Other Documents	ITR Lead Signature	Date
3.3.1	None	N/A	N/A

AMWTP Advanced Mixed Waste Treatment Project	*Advanced Mixed Waste Treatment Project* *REQUALIFICATION CHECKLIST* *Level I Validation Independent Technical Reviewer for Visual Examination*	**QCITR0VE** **Rev 0**

Employee Name Craig Simmons S# 58429

Sign-off by the ITR Lead indicates that each knowledge item has been reviewed IAW with the Training/Evaluation Standard and that the Trainee demonstrates a satisfactory understanding of how it pertains to their job responsibilities.

3.4 Knowledge:	ITR Lead Signature or as indicated	Date
3.4.1 Discuss any recent changes to the WTS System and how it applies to tasks covered in this qualification checklist.	Ron A	3-2-14
3.4.2 Discuss any lessons learned regarding Level I Validation activities that have occurred within the past 24 months. Lessons Learned Discussed: Fire in Box line PCB Dirt Layers of Containment	Ron A	3-2-14

Employee Name Craig Simmons S# 58429

4.0 OJT Training Objectives

The elements below are to be performed (P), simulated (S), or discussed (D) as indicated. If there are two or more choices (P, S, or D), then circle which one was used.

Sign-off by the ITR Lead indicates successful performance of the task. If the trainee cannot perform the task without coaching, terminate the Performance Assessment.

	P S D	ITR OJT or TRU Programs Mgr. Signature & date

4.1 VE ITR Tasks		
4.1.1 Verify the presence or absence of prohibited items has been properly identified.	P S	3-2-14
4.1.2 Discuss the scenarios when it would be appropriate to generate an NCR. • Containers that have prohibited items • Containers that fail to meet DQOs or QAOs • Containers that have a physical form, WMC, or IDC that does not match the waste stream description.	(D)	3-2-14
4.1.3 Discuss the appropriate actions to take if you discover that an NCR has not been generated for those items listed in the previous step.	(D)	3-2-14

AMWTP	*Advanced Mixed Waste Treatment Project* *REQUALIFICATION CHECKLIST* *Level I Validation Independent Technical Reviewer for Visual Examination*	**QCITR0VE** **Rev 0**

Employee Name Craig Simmons S# 58429

5.0 ***Emergency / Abnormal Conditions***
The elements below are to be simulated (S) or discussed (D) as indicated. If both S and D are indicated, then circle which one was used. Sign-off by the evaluator indicates successful performance of the task. If the trainee cannot perform the task without coaching, terminate the Performance Assessment.

		S D	ITR OJT or TRU Programs Mgr. Signature & date	Date
5.1	Fire / Alarm	(S) D		3-2-14
5.2	Location of fire extinguishers / fire alarm boxes	(S) D		3-2-14
5.3	Spill / Contamination Release (MP-EC&P-7.10)	(S) D		3-2-14
5.4	Injured Person	(S) D		3-2-14
5.5	Evacuation (MP-EP&C-12.716) Mod. 0A	(S) D		3-2-14
5.6	Take Cover (MP-EP&C-12.716) Mod. 0A	(S) D		3-2-14

AMWTP	*Advanced Mixed Waste Treatment Project* *REQUALIFICATION CHECKLIST* *Level I Validation Independent Technical Reviewer for Visual Examination*	**QCITR0VE** **Rev 0**

Employee Name Craig Simmons S# 58429

6.0 **Examinations** (Sections 1-5 must be complete prior to testing)		
Written Exam (80% required to pass) Exam #: 1 Score: 90% *(If first exam is failed the supervisor must assign remedial training)* Form-1039 attached ☐ (check box when completed form-1039 is attached. Not required if first exam is passed.) Re-exam # _____ Score: _____ (N/A if first exam is passed with 80% or greater)		
Exam Passed	Amy Bell Exam Proctor Signature	3/4/14 Date

7.0 **Recommendation for Qualification**		
After discussion with the candidate concerning this job scope, the ITR Lead or TRU Programs Mgr. acknowledges that the trainee possesses the knowledge, skills, and abilities to perform this job function correctly the first time, safely and compliantly. In addition, the ITR Lead or TRU Programs Mgr. has completed the quality validation of this document in accordance with the requirements in MP-DOCS-18.2. (Guidance is given in the Training/Evaluation Standard)		
ITR Lead or TRU Programs Mgr. Title	Steve Tall Signature	3/13/14 Date

Upon satisfactory completion of this requalification checklist, the TRU Programs Manager may grant Qualification to the trainee on the front cover of this qualification checklist.

DIVIDER

PAGE

AMWTP Advanced Mixed Waste Treatment Project	*Advanced Mixed Waste Treatment Project* *REQUALIFICATION PACKAGE* *Visual Examiner*	QPVE0001 Rev. 4

Employee Name Mark Sorenson S# 101562

VISUAL EXAMINER

Requalification Package Number: QPVE0001

The manager granting qualification acknowledges that the employee possesses the knowledge, skills, and abilities to perform this job function correctly the first time, safely and compliantly.

Qualification granted by:	C. A. STEPZINSKI		08/02/13
Production Manager	Print Name	Signature	Date

Form-1268, Production System Access Request, has been submitted for the appropriate WTS role(s) for this individual.	C. A. STEPZINSKI		08/02/13
	Print Name	Signature	Date

Required Attachments: Check box if attached	Remedial Form ☐ (If used)	Exception Form ☐ (If used)

Qual Pack Issued By :	P. READIST		7/10/13
	Print Name	Signature	Date

Qualification Package Approval Section

Line Manager Approval	S. Peterman	Signature on file	10/2/2012
	Print Name	Signature	Date

TRAINING DEPT. AUG 05 2013

Training Manager Approval	Todd Golberg	Signature on file	10/2/2012
	Print Name	Signature	Date

Initials R QC 8/6/13 R

Employee Name Mark Sorenson S# 101562

Revision History

Revision Number	Affected Pages	Description of Change	Date
0	All	Initial Issue. QPVE0001 was generated to replace QPOT4B and FQPOT10A. QPVEE0002 and QPVE0003 were generated as delta qualification for personnel who were current in QPOT4B and FQPOT10A.	05/30/07
1	All	Update the VE qual. pack to meet new WIPP 311 Permit Modifications. Retire QP-OT-4B Characterization VE; FQP-OT-10A Facility VE; QCCVEFVE Characterization Visual Examination Operators to qualify as Facility Visual Examination Operators; QPVE0002 Pre-Qualified Visual Examiner; and QPVE0003 Pre-Qualified Visual Examiner.	05/30/08
2	All	Revised JTAL to make more specific to VE tasks.	03/04/09
3	All	Made editorial changes. Updated format and incorporated evaluation standard.	3/29/10
4	All	Periodic review and update.	10/2/12

Mod Letter	Affected Pages	Description of Change	Management Approval *	Date

* Manager signature required for modifications.

AMWTP Advanced Mixed Waste Treatment Project	*Advanced Mixed Waste Treatment Project* *REQUALIFICATION PACKAGE* *Visual Examiner*	**QPVE0001** **Rev. 4**

Employee Name Mark Sorenson S# 101562

Signature Roster
Personnel signing blocks in this qualification package must print their name legibly, sign and initial. Signature by Evaluators indicates they have used the Training/Evaluation Standard and performed evaluations IAW MP-RTQP-14.13. Copy this sheet if necessary.

Name (Printed)	Signature	Initials
D. REDDIST	T PDREEC	R
L J WALKER	L J Walk	LJW
George Byram	George Byram	GB
Dave Becker	D Becker	DB
C.A. STEPZINSKI		

AMWTP Advanced Mixed Waste Treatment Project	*Advanced Mixed Waste Treatment Project* *REQUALIFICATION PACKAGE* *Visual Examiner*	**QPVE0001** **Rev. 4**

Employee Name Mark Sorenson S# 101562

1.0 Scope

This requalification package assures the knowledge and skill requirements for personnel performing VE at AMWTP are maintained. This requalification is valid for 24 months, after which, another requalification checklist must be completed to maintain qualification status.

Individuals may be disqualified for any of the following: Extended absence, identified training expires, failure of recurring proficiency/performance exams, performance deficiencies, etc. as applicable.

2.0 Prerequisites

Ensure the trainee has successfully completed the requirements listed below before completing this requalification package.

The employee has completed all initial training *and is current* on the applicable qualifications / checklists listed on the ITP to support this qualification package.

George R — Employee's Production Manager — 7/10/13 — Date

	Date Requirement Was Completed	Signature (Training Representative or SS)	Date
2.1 Completion of VE qualification (QPVE0001).	7/29/11	SPDRECC	7/10/13

AMWTP Advanced Mixed Waste Treatment Project	*Advanced Mixed Waste Treatment Project* *REQUALIFICATION PACKAGE* *Visual Examiner*	QPVE0001 Rev. 4

Employee Name Mark Sorenson S# 101562

3.0 Initial & Continuing Training / Knowledge / Required Reading

The initial training courses identified pertain to the job function/duties and will be verified complete by the employee's SS, the VEE SME or Lead, or a Training Representative.

3.1 Training Courses (Indicate Courses that are Recurring):	Date Requirement was Complete	Recurring Training /Qualification Frequency
3.1.1 0AWT1118, LLW/MLLW Disposition Plan	2/13/12	24 months
VEE SME or Lead, Training Representative or SS verify training courses are complete:	JPDRecc (Signature)	7/10/13 (Date)

Sign-off by the VEE indicates that each required reading has been reviewed IAW with the Training/Evaluation Standard and that the Trainee demonstrates a satisfactory understanding of how it pertains to their job responsibilities.

3.2 Required Reading: Operating Instructions	VEE	Date
3.2.1 Discuss any recent changes to INST-OI-34 and INST-FOI-17.	Mark	7/10/13
3.3 Required Reading: Other Documents	VEE	Date
3.3.1 None	N/A	N/A

Sign-off by the OJT Instructor or SS indicates that each knowledge item has been reviewed IAW with the Training/Evaluation Standard and that the Trainee demonstrates a satisfactory understanding of how it pertains to their job responsibilities.

3.4 Knowledge:	VEE / SS Signature	Date
3.4.1 Discuss any lessons learned concerning Visual Examination.	Mark	7/10/13
3.4.2 Discuss the any applicable Criticality Working Requirements (CWRs).	Mark	7/10/13

Employee Name Mark Sorenson S# 101562

3.4 Knowledge:	VEE / SS Signature	Date

4.0 OJT Training Objectives

The elements below are to be performed (P), simulated (S), or discussed (D) as indicated. Circle all that apply.

Sign-off by the VEE (as the Evaluator) indicates successful performance of the task. If the trainee cannot perform the task without coaching, terminate the Performance Assessment.

VE Over-Train Performance Objectives		P S D	Evaluator Signature & date
4.1	Generate (enter) examination related data into WTS.	P(S)	Walk 7/10/13
4.2	Verify (concur with) examination-related data entered into WTS.	P(S)	Walk 7/10/13
4.3	Identify closure methods and layers of confinement.	P(S)	Walk 7/10/13
4.4	Discuss how to ensure DQOs are met.	D	Walk 7/10/13
4.5	Identify packaging configurations.	P(S)	Walk 7/10/13
4.6	Assign proper Waste Material Parameters to waste.	P(S)	Walk 7/10/13
4.7	Perform weight and volume conversions using procedural aids.	P(S)	Walk 7/10/13
4.8	Assign the correct IDC and Waste Matrix Code during the VE process.	P(S)	Walk 7/10/13
4.9	Identify the path forward for prohibited and nonconforming items and the associated NCRs.	P(S)	Walk 7/10/13
4.10	Identify common and conditional waste items through VE or video.	P(S)	Walk 7/10/13
4.11	Identify packaging and waste materials.	P(S)	Walk 7/10/13

AMWTP Advanced Mixed Waste Treatment Project	*Advanced Mixed Waste Treatment Project* *REQUALIFICATION PACKAGE* *Visual Examiner*	QPVE0001 Rev. 4

Employee Name Mark Sorenson S# 101562

VE Over-Train Performance Objectives		PSD	Evaluator Signature & date
4.12	Identify prohibited and suspect items through VE or video.	P(S)	Walk 7/10/13
4.13	Assign correct IDCs for newly generated secondary waste and compacted waste.	P(S)	Walk 7/10/13
4.14	Estimate volumes and nominal densities of waste.	P(S)	Walk 7/10/13
4.15	Identify rigid liner types and their status and condition.	P(S)	Walk 7/10/13
4.16	Identify filter models and update WTS for filter removal/insertion on the Container Filters screen.	P(S)	Walk 7/10/13
4.17	Perform Newly Generated Waste (NGW) package VE.	P(S)	Walk 7/10/13
4.18	Perform Newly Generated Waste Closure VE.	P(S)	Walk 7/10/13
4.19	Perform VE of Legacy Waste.	P(S)	Walk 7/10/13
4.20	Perform Boxline VE (BiD).	P(S)	Walk 7/10/13
4.21	Perform Boxline VE (DiD) using volume estimates and nominal densities.	P(S)	Walk 7/10/13
4.22	Perform RTR VE Update (RVU) for Prohibited Item removal (using volume estimates and nominal densities).	P(S)	Walk 7/10/13
4.23	Perform RVU for the final configuration of a Coring Drum.	P(S)	Walk 7/10/13
4.24	Perform RVU for the final configuration of a Treatment Drum.	P(S)	Walk 7/10/13
4.25	Perform an update of an NCR for Treatment or the removal of suspect / prohibited items.	P(S)	Walk 7/10/13

Employee Name Mark Sorenson S# 161562

5.0 **Emergency / Abnormal Conditions**
The elements below are to be simulated (S) or discussed (D) as indicated. If both S and D are indicated, then circle which one was used. Sign-off by the SS indicates successful performance of the task. If the trainee cannot perform the task without coaching, terminate the Performance Assessment.

		P S D	SS Signature	Date
5.1	Fire / Alarm (OI-33, FOI-16, AOI-10, RS&C-6.12)	S(D)	A Bucher	07/27/13
5.2	Location of fire extinguishers / fire alarm boxes in WMF-634, 676, and 628.	S(D)	A Bucher	07/27/13
5.3	Dropped waste container (MP-EC&P-12.9)	S(D)	A Bucher	07/27/13
5.4	Breached Container (INST-OI-11; INST-FOI-20)	S(D)	A Bucher	07/27/13
5.5	CAM Alarm (OI-11, RS&C-6.12)	S(D)	A Bucher	07/27/13
5.6	Spill / Contamination Release (INST-OI-88)	S(D)	A Bucher	07/27/13
5.7	Injured Person (MP-ISIH-2.54, RS&C-6.12)	S(D)	A Bucher	07/27/13
5.8	Loss of ventilation/air system (OI-11, AOI-05, OI-16, OI-33)	S(D)	A Bucher	07/27/13
5.9	Loss of Commercial Power (AOI-04)	S(D)	A Bucher	07/27/13
5.10	Evacuation (EP&C-12.16)	S(D)	A Bucher	07/27/13
5.11	Take Cover (EP&C-12.16)	S(D)	A Bucher	07/27/13

AMWTP Advanced Mixed Waste Treatment Project	*Advanced Mixed Waste Treatment Project* *REQUALIFICATION PACKAGE* *Visual Examiner*	**QPVE0001** **Rev. 4**

Employee Name Mark Sorenson S# 101562

6.0 **Examinations** (Sections 1-5 must be complete prior to testing)	**NO TEST REQUIRED**

7.0 **Recommendation for Requalification**		
After discussion with the candidate concerning this job scope, the Visual Examination Expert (VEE) acknowledges that the trainee possesses the knowledge, skills, and abilities to perform this job function correctly the first time, safely and compliantly. In addition, the VEE has completed the quality validation of this document in accordance with the requirements in MP-DOCS-18.2. (Guidance is given in the Training/Evaluation Standard)		
Visual Examination Expert Title	 Signature	7/16/13 Date

Upon satisfactory completion of this qualification package, the Characterization or Facility Production Manager may grant Re-Qualification to the trainee on the front cover of this re-qualification package.

DIVIDER

PAGE

AMWTP Advanced Mixed Waste Treatment Project	Advanced Mixed Waste Treatment Project REQUALIFICATION CHECKLIST Level I Validation Independent Technical Reviewer for Visual Examination	QCITR0VE Rev 0

Employee Name L J WALKER S# 901454

Level I Validation ITR for Visual Examination

Requalification Checklist #: QCITR0VE

The manager granting qualification acknowledges that the employee possesses the knowledge, skills, and abilities to perform this job function correctly the first time, safely and compliantly.

Qualification granted by: **TRU Programs Mgr.**	George Byram	George Byram	5/6/14
Manager Title	Print Name	Signature	Date

Form-1268, Production System Access Request, has been submitted for the appropriate WTS role(s) for this individual.	L J WALKER	L J Walker	5/12/14
Title	Print Name	Signature	Date

Required Attachments: Check box if attached	Written Exam ☒	Remedial Form ☐	Exception Form ☐ (If used)

Qual Pack Issued By :	Amy Betzer	Amy Betzer	4/14/14
	Print Name	Signature	Date

Qualification Checklist Approval Section

Line Manager Approval	Sue Peterman	TRAINING DEPT. Signature on File MAY 1 2 2014	1/24/12
	Print Name	Signature	Date
Training Manager Approval	Mike Parrish	Initials Signature on File	1/26/12
	Print Name	Signature	Date

AMWTP Advanced Mixed Waste Treatment Project	*Advanced Mixed Waste Treatment Project* *REQUALIFICATION CHECKLIST* *Level I Validation Independent Technical Reviewer for Visual Examination*	**QCITR0VE** **Rev 0**

Employee Name L J WALKER S# 901454

Revision History

Revision Number	Affected Pages	Description of Change	Date
0	All	The ITR qualification was previously contained in one checklist (QPITR3A) which incorporated ITR duties for VE, Solid Sampling/Coring, and RTR batch validation. Those ITR duties have now been split into three separate checklists for each ITR area.	1/26/12

Modification Record

Mod Letter	Affected Pages	Description of Change	Management Approval *	Date
0A	8	Items 5.5 and 5.6: Change procedural reference to MP-EP&C-12.16	S Peterman (signature on file)	5/3/12

* Manager signature required for modifications.

AMWTP Advanced Mixed Waste Treatment Project	*Advanced Mixed Waste Treatment Project* *REQUALIFICATION CHECKLIST* *Level I Validation Independent Technical Reviewer for Visual Examination*	**QCITR0VE** **Rev 0**

Employee Name L J WALKER S# 9D1454

Signature Roster
Personnel signing blocks in this qualification package must print their name legibly, sign and initial. Signature by Evaluators indicates they have used the Training/Evaluation Standard and performed evaluations IAW MP-RTQP-14.13. Copy this sheet if necessary.

Name (Printed)	Signature	Initials
Amy Betzer	Amy Betzer	AB
George Dysam 05/08/14	George Dysam	GD
Mark Hart Sorenson	Mark Sorenson	M.S.
L J WALKER	L J Walker	LJW

1.0 Scope

This requalification checklist is developed to provide assurance that an individual performing Level I Validation of Sampling, RTR, or VE batch data in accordance with the requirements of MP-TRUW-8.2, Quality Assurance Project Plan, is qualified to perform the tasks associated with that function. This requalification is used for personnel performing ITR activities associated with these batches at AMWTP and who are currently qualified in the prerequisite qualifications listed below. This requalification document provides the candidate with a comprehensive foundation in the knowledge and skills required for compliant task performance. This qualification expires 24 months from the grant date.

Maintaining this qualification requires the individual to maintain current qualification in QPVE0001 (Visual Examiner). Recurring training must be completed prior to expiration.

Extended absences, identified training expires, failure of recurring proficiency/performance exams, performance deficiencies, etc. may result in disqualification of the individual until any or all conditions are remediated.

AMWTP Advanced Mixed Waste Treatment Project	*Advanced Mixed Waste Treatment Project* *REQUALIFICATION CHECKLIST* *Level I Validation Independent Technical Reviewer for Visual Examination*	**QCITR0VE** **Rev 0**

Employee Name L J WALKER S# 901454

2.0 **Prerequisites**
Ensure the trainee has successfully completed the requirements listed below before completing this qualification checklist.
The Employee Position Description (EPD), Form-1018 has been reviewed or a new one completed to ensure the duties of this position are included and to verify the education and experience requirements have been satisfied. (MP-RTQP-14.1). The employees Individual Training Plan (ITP), Form-1020, is current, or has been updated, to include the appropriate RCRA Profile and all general courses required for individuals performing Level I Validation activities. The ITP also includes the qualification checklists for all applicable equipment that will be used by operators in this job scope. The employee has completed all initial training *and is current* on the applicable qualifications / checklists listed on the ITP to support this qualification package. Employee's Production Manager — Date: 4/23/14

		Date Requirement Was Completed	**Signature** (Training Specialist or ITR Lead)	**Date**
2.1	Current QPVE0001, Visual Examiner	9/19/12	Amy Beth	4/16/14
2.2	QCITR0VE, Level I Validation Independent Technical Reviewer For Visual Examination OR QPITR3A, Level I Validation	5/15/12	Amy Beth	4/16/14

Employee Name LJ WALKER S# 901454

3.0	**Initial & Continuing Training / Knowledge / Required Reading**

The initial training courses identified pertain to the job function/duties and will be verified complete by the ITR Lead or a Training Representative.

3.1	Training Courses (Indicate Courses that are Recurring):	Date Requirement was Complete	Recurring Training /Qualification Frequency
3.1.1	None	N/A	N/A

Sign-off by the ITR Lead indicates that each required reading has been reviewed IAW with the Training/Evaluation Standard and that the Trainee demonstrates a satisfactory understanding of how it pertains to their job responsibilities

3.2	Required Reading: Operating Instructions	ITR Lead Signature	Date
3.2.1	None	N/A	N/A

3.3	Required Reading: Other Documents	ITR Lead Signature	Date
3.3.1	None	N/A	N/A

AMWTP Advanced Mixed Waste Treatment Project	*Advanced Mixed Waste Treatment Project* *REQUALIFICATION CHECKLIST* *Level I Validation Independent Technical Reviewer for Visual Examination*	**QCITR0VE** **Rev 0**

Employee Name LJ WALKER S# 9D1454

Sign-off by the ITR Lead indicates that each knowledge item has been reviewed IAW with the Training/Evaluation Standard and that the Trainee demonstrates a satisfactory understanding of how it pertains to their job responsibilities.

3.4 Knowledge:	ITR Lead Signature or as indicated	Date
3.4.1 Discuss any recent changes to the WTS System and how it applies to tasks covered in this qualification checklist.	Mark Sorenson	5/3/14
3.4.2 Discuss any lessons learned regarding Level I Validation activities that have occurred within the past 24 months. Lessons Learned Discussed: Super Compactor Cart Clean-out checklist Question Promotions of batch without NCR attatched to drum Ensuring only 20 drums in batch	Mark Sorenson	5/3/14

AMWTP Advanced Mixed Waste Treatment Project	*Advanced Mixed Waste Treatment Project* *REQUALIFICATION CHECKLIST* *Level I Validation Independent Technical Reviewer for Visual Examination*	**QCITR0VE** **Rev 0**

Employee Name L J WALKER S# 9D1454

4.0 OJT Training Objectives

The elements below are to be performed (P), simulated (S), or discussed (D) as indicated. If there are two or more choices (P, S, or D), then circle which one was used.

Sign-off by the ITR Lead indicates successful performance of the task. If the trainee cannot perform the task without coaching, terminate the Performance Assessment.

	P S D	**ITR OJT or TRU Programs Mgr. Signature & date**
4.1 VE ITR Tasks		
4.1.1 Verify the presence or absence of prohibited items has been properly identified.	P (S)	Mark Dorenson 5/3/14
4.1.2 Discuss the scenarios when it would be appropriate to generate an NCR. • Containers that have prohibited items • Containers that fail to meet DQOs or QAOs • Containers that have a physical form, WMC, or IDC that does not match the waste stream description.	(D)	Mark Dorenson 5/3/14
4.1.3 Discuss the appropriate actions to take if you discover that an NCR has not been generated for those items listed in the previous step.	(D)	Mark Dorenson 5/3/14

AMWTP Advanced Mixed Waste Treatment Project	*Advanced Mixed Waste Treatment Project* *REQUALIFICATION CHECKLIST* *Level I Validation Independent Technical Reviewer for Visual Examination*	**QCITR0VE** **Rev 0**

Employee Name L J WALKER S# 901454

5.0 ***Emergency / Abnormal Conditions***
The elements below are to be simulated (S) or discussed (D) as indicated. If both S and D are indicated, then circle which one was used. Sign-off by the evaluator indicates successful performance of the task. If the trainee cannot perform the task without coaching, terminate the Performance Assessment.

		S D	ITR OJT or TRU Programs Mgr. Signature & date	Date
5.1	Fire / Alarm	S (D)	Mark Sorenson	5/3/14
5.2	Location of fire extinguishers / fire alarm boxes	S (D)	Mark Sorenson	5/3/14
5.3	Spill / Contamination Release (MP-EC&P-7.10)	S (D)	Mark Sorenson	5/3/14
5.4	Injured Person	S (D)	Mark Sorenson	5/3/14
5.5	Evacuation (MP-EP&C-12.716) Mod. 0A	S (D)	Mark Sorenson	5/3/14
5.6	Take Cover (MP-EP&C-12.716) Mod. 0A	S (D)	Mark Sorenson	5/3/14

AMWTP Advanced Mixed Waste Treatment Project	*Advanced Mixed Waste Treatment Project* *REQUALIFICATION CHECKLIST* *Level I Validation Independent Technical Reviewer for Visual Examination*	QCITR0VE Rev 0

Employee Name LJ WALKER S# 901454

6.0 **Examinations** (Sections 1-5 must be complete prior to testing)		
Written Exam (80% required to pass) Exam #: 1 Score: 90% *(If first exam is failed the supervisor must assign remedial training)* Form-1039 attached ☐ (check box when completed form-1039 is attached. Not required if first exam is passed.) Re-exam # _____ Score:_____ (N/A if first exam is passed with 80% or greater)		
Exam Passed	Amy Batty Exam Proctor Signature	5/12/14 Date

7.0 **Recommendation for Qualification**		
After discussion with the candidate concerning this job scope, the ITR Lead or TRU Programs Mgr. acknowledges that the trainee possesses the knowledge, skills, and abilities to perform this job function correctly the first time, safely and compliantly. In addition, the ITR Lead or TRU Programs Mgr. has completed the quality validation of this document in accordance with the requirements in MP-DOCS-18.2. (Guidance is given in the Training/Evaluation Standard)		
ITR Lead or TRU Programs Mgr. Title	Monte Sorenson Signature	5/3/14 Date

Upon satisfactory completion of this requalification checklist, the TRU Programs Manager may grant Qualification to the trainee on the front cover of this qualification checklist.

GEN10

Please print or type. (Form designed for use on elite (12-pitch) typewriter.) Form Approved. OMB No. 2050-0039

UNIFORM HAZARDOUS WASTE MANIFEST	1. Generator ID Number	2. Page 1 of	3. Emergency Response Phone	4. Manifest Tracking Number
	ID4890008952	2	(575) 885-6883	001600972 GBF

GENERATOR

5. Generator's Name and Mailing Address
IDAHO NATIONAL LABORATORY FOR U.S. DEPT. OF ENERGY
850 ENERGY DRIVE
IDAHO FALLS ID 83401
Generator's Phone: (208)557-6607

Generator's Site Address (if different than mailing address)
AMWTP
HIGHWAY 20 AND VAN BUREN BLVD
SCOVILLE ID 83415

6. Transporter 1 Company Name
VISIONARY SOLUTIONS, LLC
U.S. EPA ID Number
NMR000013086

7. Transporter 2 Company Name
U.S. EPA ID Number

8. Designated Facility Name and Site Address
NUCLEAR WASTE PARTNERSHIP, LLC FOR THE U.S. DOE
30 MILES E. OF CARLSBAD ON JAL HIGHWAY
EDDY COUNTY NM 88221
Facility's Phone: (575)234-8457
U.S. EPA ID Number
NM4890139088

9a. HM	9b. U.S. DOT Description (including Proper Shipping Name, Hazard Class, ID Number, and Packing Group (if any))	10. Containers No.	10. Containers Type	11. Total Quantity	12. Unit Wt./Vol.	13. Waste Codes		
RQ	1. UN3328, WASTE RADIOACTIVE MATERIAL, TYPE B(U) PACKAGE, FISSILE, 7, PU-239, AM-241, PU-240, SOLID, OXIDE, 0.01313 TBq, RADIOACTIVE YELLOW-II, T.I. 0.2, C.S.I. 0.0, USA/9218/B(U)F-96, TRUPACT # 181	1	CM	2115	K	F001	F002	F005
						D008	D022	D026
	X PCB Container #BN10509603, Sludge, PCB Out of Service Date 04/29/2013, PCB Weight 1004.2 kg							
RQ	X 2. UN3328, WASTE RADIOACTIVE MATERIAL, TYPE B(U) PACKAGE, FISSILE, 7, PU-239, PU-240, AM-241, SOLID, OXIDE, 0.03099 TBq, RADIOACTIVE YELLOW-II, T.I. 0.2, C.S.I. 0.0, USA/9218/B(U)F-96, TRUPACT #202	1	CM	2109	K	F001	F002	F005
						D008	D022	D026
	X PCB Container #BN10509602, Sludge, PCB Out of Service Date 02/27/2013, PCB Weight 997.6 kg							

14. Special Handling Instructions and Additional Information
SHIPMENT # IN140044 TRACTOR - V 33 TRAILER - 301
GROSS WEIGHT IN LBS: TP# 181 = 17,200 TP# 202 = 17,279 TP# 512 = 14,571
PREPARED UNDER CONTRACT # DE-EM0001467 ERG - 165 ERI PROVIDER - WIPP CMR

15. GENERATOR'S/OFFEROR'S CERTIFICATION: I hereby declare that the contents of this consignment are fully and accurately described above by the proper shipping name, and are classified, packaged, marked and labeled/placarded, and are in all respects in proper condition for transport according to applicable international and national governmental regulations. If export shipment and I am the Primary Exporter, I certify that the contents of this consignment conform to the terms of the attached EPA Acknowledgment of Consent.
I certify that the waste minimization statement identified in 40 CFR 262.27(a) (if I am a large quantity generator) or (b) (if I am a small quantity generator) is true.

Generator's/Offeror's Printed/Typed Name: LONNEY NATE
Signature: Lonney Nate
Month: 02 Day: 04 Year: 14

INT'L

16. International Shipments ☐ Import to U.S. ☐ Export from U.S. Port of entry/exit:
Transporter signature (for exports only): Date leaving U.S.:

TRANSPORTER

17. Transporter Acknowledgment of Receipt of Materials
Transporter 1 Printed/Typed Name: Tim Worden
Signature:
Month: 02 Day: 04 Year: 14
Transporter 2 Printed/Typed Name:
Signature:
Month: Day: Year:

DESIGNATED FACILITY

18. Discrepancy
18a. Discrepancy Indication Space ☐ Quantity ☐ Type ☐ Residue ☐ Partial Rejection ☐ Full Rejection
Manifest Reference Number:

18b. Alternate Facility (or Generator)
U.S. EPA ID Number
Facility's Phone:

18c. Signature of Alternate Facility (or Generator)
Month: Day: Year:

19. Hazardous Waste Report Management Method Codes (i.e., codes for hazardous waste treatment, disposal, and recycling systems)

1.	2.	3.	4.
H132	H132	H132	

20. Designated Facility Owner or Operator: Certification of receipt of hazardous materials covered by the manifest except as noted in Item 18a
Printed/Typed Name: Mike Proctor
Signature:
Month: 02 Day: 06 Year: 14

IN140044\B-2014-0151\20132

EPA Form 8700-22 (Rev. 3-05) Previous editions are obsolete.

Please print or type. (Form designed for use on elite (12-pitch) typewriter.)

Form Approved. OMB No. 2050-0039

UNIFORM HAZARDOUS WASTE MANIFEST (Continuation Sheet)

21. Generator ID Number: ID4890008952

22. Page 2 of 2

23. Manifest Tracking Number: 001600972GBF

24. Generator's Name: IDAHO NATIONAL LABORATORY FOR U.S. DEPT. OF ENERGY
850 ENERGY DRIVE
IDAHO FALLS ID 83401

25. Transporter _____ Company Name — U.S. EPA ID Number

26. Transporter _____ Company Name — U.S. EPA ID Number

27a. HM	27b. U.S. DOT Description (including Proper Shipping Name, Hazard Class, ID Number, and Packing Group (if any))	28. Containers No.	28. Containers Type	29. Total Quantity	30. Unit Wt./Vol.	31. Waste Codes		
RQ	3. UN3328, WASTE RADIOACTIVE MATERIAL, TYPE B(U) PACKAGE, FISSILE, 7, AM-241, PU-239, SOLID, OXIDE, 1.003 TBq, RADIOACTIVE YELLOW-II, T.I. 0.2, C.S.I. 0.0, USA/9279/B(U)F-96, TRUPACT # 512	1	CM	1628	K	F001	F002	F005
						D004	D005	D008

32. Special Handling Instructions and Additional Information

TRANSPORTER

33. Transporter _____ Acknowledgment of Receipt of Materials
Printed/Typed Name | Signature | Month | Day | Year

34. Transporter _____ Acknowledgment of Receipt of Materials
Printed/Typed Name | Signature | Month | Day | Year

DESIGNATED FACILITY

35. Discrepancy

36. Hazardous Waste Report Management Method Codes (i.e., codes for hazardous waste treatment, disposal, and recycling systems)

IN140044\B-2014-0151\3 of 32

EPA Form 8700-22A (Rev. 3-05) Previous editions are obsolete.

DIVIDER

PAGE

Please print or type. (Form designed for use on elite (12-pitch) typewriter.)

Form Approved. OMB No. 2050-0039

UNIFORM HAZARDOUS WASTE MANIFEST	1. Generator ID Number	2. Page 1 of	3. Emergency Response Phone	4. Manifest Tracking Number
	ID4890008952	2	(575) 885-6883	001600973 GBF

GENERATOR

5. Generator's Name and Mailing Address
IDAHO NATIONAL LABORATORY FOR U.S. DEPT. OF ENERGY
850 ENERGY DRIVE
IDAHO FALLS ID 83401
Generator's Phone: (208)557-6607

Generator's Site Address (if different than mailing address)
AMWTP
HIGHWAY 20 AND VAN BUREN BLVD
SCOVILLE ID 83415

6. Transporter 1 Company Name
CAST SPECIALTY TRANSPORTATION INC.
U.S. EPA ID Number
COR000206722

7. Transporter 2 Company Name
U.S. EPA ID Number

8. Designated Facility Name and Site Address
NUCLEAR WASTE PARTNERSHIP, LLC FOR THE U.S. DOE
30 MILES E. OF CARLSBAD ON JAL HIGHWAY
EDDY COUNTY NM 88221
Facility's Phone: (575)234-8457
U.S. EPA ID Number
NM4890139088

9a. HM	9b. U.S. DOT Description (including Proper Shipping Name, Hazard Class, ID Number, and Packing Group (if any))	10. Containers No.	10. Containers Type	11. Total Quantity	12. Unit Wt./Vol.	13. Waste Codes		
RQ	1. UN3328, WASTE RADIOACTIVE MATERIAL, TYPE B(U) PACKAGE, FISSILE, 7, PU-239, AM-241, PU-240, SOLID, OXIDE, 0.01225 TBq, RADIOACTIVE YELLOW-II, T.I. 0.2, C.S.I. 0.0, USA/9218/B(U)F-96, TRUPACT # 142	1	CM	2147	K	F001	F002	F005
						D022	D026	D027
	2. PCB Container # BN10507558, Sludge, PCB Out of Service Date 01/29/2013, PCB Weight 1036.2 kg							
RQ	3. 2. UN3328, WASTE RADIOACTIVE MATERIAL, TYPE B(U) PACKAGE, FISSILE, 7, PU-239, AM-241, PU-240, SOLID, OXIDE, 0.006859 TBq, RADIOACTIVE YELLOW-II, T.I. 0.2, C.S.I. 0.0, USA/9218/B(U)F-96, TRUPACT # 167	1	CM	2082	K	F001	F002	F005
						D022	D026	D027
	4. PCB Container # BN10507545, Sludge, PCB Out of Service Date 06/10/2013, PCB Weight 971 kg							

14. Special Handling Instructions and Additional Information
SHIPMENT # IN140045 TRACTOR C-37 TRAILER - 321
GROSS WEIGHT IN LBS: TP# 142 = 17,380 TP# 167 = 17,557 TP# 508 = 13,765
PREPARED UNDER CONTRACT # DE-EM0001467 ERG 165 ERI PROVIDER - WIPP CMR

15. GENERATOR'S/OFFEROR'S CERTIFICATION: I hereby declare that the contents of this consignment are fully and accurately described above by the proper shipping name, and are classified, packaged, marked and labeled/placarded, and are in all respects in proper condition for transport according to applicable international and national governmental regulations. If export shipment and I am the Primary Exporter, I certify that the contents of this consignment conform to the terms of the attached EPA Acknowledgment of Consent.
I certify that the waste minimization statement identified in 40 CFR 262.27(a) (if I am a large quantity generator) or (b) (if I am a small quantity generator) is true.

Generator's/Offeror's Printed/Typed Name: LONNEY NATE
Signature: Lonney Nate
Month: 02 Day: 04 Year: 14

INTL

16. International Shipments ☐ Import to U.S. ☐ Export from U.S. Port of entry/exit:
Transporter signature (for exports only): Date leaving U.S.:

TRANSPORTER

17. Transporter Acknowledgment of Receipt of Materials

Transporter 1 Printed/Typed Name: Byron L. Steele
Signature: Byron L Steele
Month: 02 Day: 04 Year: 14

Transporter 2 Printed/Typed Name:
Signature:
Month: Day: Year:

DESIGNATED FACILITY

18. Discrepancy

18a. Discrepancy Indication Space ☐ Quantity ☐ Type ☐ Residue ☐ Partial Rejection ☐ Full Rejection

Manifest Reference Number:

18b. Alternate Facility (or Generator)
U.S. EPA ID Number
Facility's Phone:

18c. Signature of Alternate Facility (or Generator)
Month: Day: Year:

19. Hazardous Waste Report Management Method Codes (i.e., codes for hazardous waste treatment, disposal, and recycling systems)

1.	2.	3.	4.
H132	H132	H132	

20. Designated Facility Owner or Operator: Certification of receipt of hazardous materials covered by the manifest except as noted in Item 18a

Printed/Typed Name: Mike Padon
Signature:
Month: 02 Day: 06 Year: 14

EPA Form 8700-22 (Rev. 3-05) Previous editions are obsolete.

Please print or type. (Form designed for use on elite (12-pitch) typewriter.)

Form Approved. OMB No. 2050-0039

UNIFORM HAZARDOUS WASTE MANIFEST (Continuation Sheet)

21. Generator ID Number: ID4890008952

22. Page 2 of 2

23. Manifest Tracking Number: 001600973GBF

24. Generator's Name: IDAHO NATIONAL LABORATORY FOR U.S. DEPT. OF ENERGY
850 ENERGY DRIVE
IDAHO FALLS ID 83401

25. Transporter _____ Company Name — U.S. EPA ID Number

26. Transporter _____ Company Name — U.S. EPA ID Number

27a. HM	27b. U.S. DOT Description (including Proper Shipping Name, Hazard Class, ID Number, and Packing Group (if any))	28. Containers No.	28. Containers Type	29. Total Quantity	30. Unit Wt./Vol.	31. Waste Codes		
RQ	3, UN3328, WASTE RADIOACTIVE MATERIAL, TYPE B(U) PACKAGE, FISSILE, 7, AM-241, PU-239, SOLID, OXIDE, 0.176 TBq, RADIOACTIVE YELLOW-II, T.I. 0.2, C.S.I. 0.0, USA/9279/B(U)F-96, TRUPACT # 508	1	CM	1405	K	F001	F002	F005
						D004	D005	D008

32. Special Handling Instructions and Additional Information

TRANSPORTER

33. Transporter _____ Acknowledgment of Receipt of Materials
Printed/Typed Name — Signature — Month Day Year

34. Transporter _____ Acknowledgment of Receipt of Materials
Printed/Typed Name — Signature — Month Day Year

DESIGNATED FACILITY

35. Discrepancy

36. Hazardous Waste Report Management Method Codes (i.e., codes for hazardous waste treatment, disposal, and recycling systems)

EPA Form 8700-22A (Rev. 3-05) Previous editions are obsolete.

AMWTP Advanced Mixed Waste Treatment Project	*Advanced Mixed Waste Treatment Project* *RE- QUALIFICATION CHECKLIST* *ACCEPTABLE KNOWLEDGE EXPERT*	GEN11 QCAKE01A Rev 3

Employee Name Julie Collins S# 76166

ACCEPTABLE KNOWLEDGE EXPERT

Qualification Checklist Number: QCAKE01A

The manager granting re- qualification acknowledges that the employee possesses the knowledge, skills, and abilities to perform this job function correctly the first time, safely and compliantly.

Re-Qualification granted by:	George Byram	George B	7/17/13
	TRU Programs Manager (Print Name)	Signature	Date

Required Attachments: Check box if attached	Exemption Form (if used) ☐	Remedial Form (if used) ☐

JUL 18 2013

Qual Pack Issued to Trainee by :	Ted Simmons		8-28-12
	Print Name	Signature	Date

Qualification Checklist Approval Section

Line Manager Approval	James Jackson	Signature on file	2/24/11
	Print Name	Signature	Date

Training Manager Approval	Ralph Hartline	Signature on file	2/24/11
	Print Name	Signature	Date

AMWTP Advanced Mixed Waste Treatment Project	*Advanced Mixed Waste Treatment Project* *RE- QUALIFICATION CHECKLIST* *ACCEPTABLE KNOWLEDGE EXPERT*	QCAKE01A Rev 3

Employee Name Julie Collins S# 76166

Revision Record

Revision Number	Affected Pages	Description of Revision	Management Approval	Date
0	All	Initial Issue	E. Torres	3/1/07
1	All	Complete revision/rewrite. Update Checklist from previous revision.	R. Hartline	7/20/09
2	All	Editorial changes	J. Jackson	9/22/09
3	6	Add items 3.3.12 and 3.3.13 to section 3.3 (Knowledge section).	J. Jackson	2/24/11

Mod Number	Affected Pages	**Modification Record** Description of Change	Management Approval	Date

- Applicable Manager must sign for modifications.

AMWTP Advanced Mixed Waste Treatment Project	*Advanced Mixed Waste Treatment Project* *RE- QUALIFICATION CHECKLIST* *ACCEPTABLE KNOWLEDGE EXPERT*	**QCAKE01A** **Rev 3**

Employee Name Julie Collins S# 76166

Signature Roster

Personnel signing blocks in this Qualification Checklist must print their name legibly, sign and initial. Sign off by the Evaluator indicates successful performance of the task IAW MP-RTQP-14.13. Copy this sheet if necessary.

Name (Printed)	Signature	Initials
Ted Simmons		TS 7.17.13
Steve Carpenter		
Camlea Hinkle-Daniel	Camlea Hinkle-Daniel	CHD 7.11.13 CHD
George Byram	George Byram	GB

AMWTP Advanced Mixed Waste Treatment Project	*Advanced Mixed Waste Treatment Project* *RE- QUALIFICATION CHECKLIST ACCEPTABLE KNOWLEDGE EXPERT*	**QCAKE01A** **Rev 3**

Employee Name Julie Collins S# 76166

1.0 Scope

Completion of this re-qualification checklist is required for all personnel performing tasks as an Acceptable Knowledge Expert (AKE). This checklist specifies the prerequisite knowledge, training, and OJT objectives necessary to assure the candidate possesses the comprehensive knowledge and skills required for compliant task performance, and is qualified to perform these tasks.

Extended absence (greater than six months) and/or performance deficiencies may result in disqualification of the individual by the AK Manager until any or all conditions are remediated.

Upon successful completion of this checklist, the candidate shall be able to independently perform duties of an AKE.

2.0 Prerequisites

Ensure the trainee has successfully completed the requirements listed below before completing this qualification checklist.

The employees Individual Training Plan (ITP), Form-1020, is current, or has been updated, to include the appropriate RCRA Profile and all courses required for personnel performing tasks in the capacity of an Acceptable Knowledge Expert (AKE).

The employee has completed all initial training *and is current* on the applicable qualifications and/or checklists identified on the ITP to support this qualification checklist.

Manager assigned Completion target date: 2,19,13

Employee's Production Manager — Date: 7,17,13

	Date Requirement Was Completed	**Signature** (Training representative or Manager)	**Date**
2.1 Initial QCAKE01A checklist	9/20/10		8-28-12

AMWTP Advanced Mixed Waste Treatment Project	*Advanced Mixed Waste Treatment Project* *RE- QUALIFICATION CHECKLIST* *ACCEPTABLE KNOWLEDGE EXPERT*	QCAKE01A Rev 3

Employee Name Julie Collins S# 76166

3.0 Initial & Continuing Training / Knowledge / Required Reading

The training courses identified pertain to the job function/duties and will be verified complete by the AK Manager or Training Specialist.

3.1 Training Courses :	Date Requirement was Complete	Recurring Training Frequency
None		

The Trainee will discuss the Required Reading documents with the qualified OJT Instructor, and/or AK Manager. These items will be signed off by the OJT instructor or AK Manager after the discussion.

3.2 Required Reading:	OJT Instructor / AK Manager Signature	Date
3.2.1 Collection, Review, and Management of Acceptable Knowledge Documentation. (MP-TRUW-8.13)		7-17-13 SC 2.26.13
3.2.2 Preparation of Waste Stream Profile Forms (MP-TRUW-8.14)		7.17.13 SC 2.26.13

The knowledge items identified pertain to the job function/duties and following an acceptable discussion will be signed by the qualified OJT Instructor or AK Manager.

3.3 Knowledge:	OJT Instructor / AK Manager Signature	Date
3.3.4 Discuss the primary site-specific processes associated with waste characterization that augments acceptable knowledge.		7.17.13 SC 2.26.13
3.3.5 Discuss data limitations and discrepancies that may occur in source documents and the process for resolution.		7.17.13 SC 2.26.13
3.3.6 Discuss the required AK information necessary for a baseline summary document.		7.17.13 SC 2.26.13
3.3.7 Discuss when an AK would develop an AK Resolution (AKR) vs. developing an AK Discrepancy Report (DR).		7.17.13 SC 2.26.13

AMWTP Advanced Mixed Waste Treatment Project	*Advanced Mixed Waste Treatment Project* *RE- QUALIFICATION CHECKLIST* *ACCEPTABLE KNOWLEDGE EXPERT*	QCAKE01A Rev 3

Employee Name Julie Collins S# 76166

3.3 Knowledge:	OJT Instructor / AK Manager Signature	Date
3.3.8 Discuss how AMWTP designates waste streams.		7.17.13 SC 2.26.13
3.3.9 Discuss the process for assigning Summary Category Groups, Waste Matrix Codes, EPA Hazardous Waste Codes and waste material parameters to a waste stream.		7.17.13 SC 2.26.13
3.3.10 Discuss the preparation and main components of a Waste Stream Profile Form and the associated Characterization Information Summary Report for each Summary Category Group.		7.17.13 SC 2.26.13
3.3.11 Discuss how non-conformances are processed, including discrepancy resolution and reporting.		7.17.13 SC 2.26.13
3.3.12 Discuss how potentially incompatible IDC changes are managed (documented, notifications to be made, etc.)		7.17.13 SC 2.26.13
3.3.13 Discuss any recent lessons learned regarding IDC changes to potentially incompatible containers.		7.17.13 SC 2.26.13

4.0 OJT Training Objectives

The following training objectives are conducted per MP-COPS-9.34, Conduct of Operations Control of On-Shift Training. These elements are to be performed (P), simulated (S) or discussed (D) as appropriate. At the conclusion of the instructions phase, the trainee will be assessed per MP-RTQP-14.13, Performance Assessments. If the trainee cannot perform the task without coaching, terminate the Performance Assessment.

AKE Tasks	P S D	*Evaluator Signature & date*	
4.1.1 Prepare an AKR using Form-1070 for submittal.	(P)	C Huckle-Daniel 3-13-13	CHD 7-11-13
4.1.2 Prepare the required AMWTP Forms for summarizing and submitting an AK source document for submittal.	(P)	C. Huckle-Daniel 3-13-13	CHD 7-11-13
4.1.3 Access the WTS AK Evaluation screen.	(P)	C Huckle-Daniel 3-13-13	CHD 7-11-13
4.1.4 Evaluate and resolve a container historical ID.	(P)	C. Huckle-Daniel 3-13-13	CHD 7-11-13

AMWTP Advanced Mixed Waste Treatment Project	*Advanced Mixed Waste Treatment Project* *RE- QUALIFICATION CHECKLIST* *ACCEPTABLE KNOWLEDGE EXPERT*	**QCAKE01A** **Rev 3**

Employee Name Julie Collins S# 76166

AKE Tasks	PSD	Evaluator Signature & date
4.1.5 Manage solids and debris container lots.	P	7.17.13 2.26.13
4.1.6 Access and navigate the TrackWise system from NCR creation to verification of NCR closure.	P	7.17.13 2.26.13

5.0 Emergency / Abnormal Conditions

The AKE must demonstrate adequate knowledge of each Emergency/Abnormal condition listed below through performance, simulation or discussion with an OJT Instructor, AKE Manager or SS. The scope of these items should pertain to the AKE's required duties.

Emergency / Abnormal Conditions	PSD	Evaluator signature	Date	
5.1 Fire/Alarm	S(D)	C.Huckle.Daniel	3.13.13	CHD 7.11.13
5.2 Location of Fire Extinguishers/Fire Alarms	P	CHuckle.Daniel	3.13.13	CHD 7.11.13
5.3 Evacuation Alarm	S(D)	CHuckle.Daniel	3.13.13	CHD 7.11.13
5.4 Injured person	S(D)	CHuckle.Daniel	3.13.13	CHD 7.11.13
5.5 Dropped Waste Container	S(D)	CHuckle.Daniel	3.13.13	CHD 7.11.13
5.6 Breached Waste Container	S(D)	CHuckle.Daniel	3.13.13	CHD 7.11.13
5.7 Take Cover Alarm	S(D)	CHuckle.Daniel	3.13.13	CHD 7.11.13
5.8 CAM Alarm	S(D)	CHuckle.Daniel	3.13.13	CHD 7.11.13
5.9 Spill/Contamination Release	S(D)	CHuckle.Daniel	3.13.13	CHD 7.11.13
5.10 Loss of ventilation/air	S(D)	CHuckle.Daniel	3.13.13	CHD 7.11.13
5.11 Loss of commercial power	S(D)	CHuckle.Daniel	3.13.13	CHD 7.11.13

6.0 Examinations (Sections 1-5 must be complete prior to testing)

Written Exam: None

AMWTP Advanced Mixed Waste Treatment Project	*Advanced Mixed Waste Treatment Project* *RE- QUALIFICATION CHECKLIST* *ACCEPTABLE KNOWLEDGE EXPERT*	**QCAKE01A** **Rev 3**

Employee Name Julie Collins S# 76166

7.0 **Recommendation for Qualification**		
After discussion with the candidate concerning this job scope, the AKE Manager (or designee) acknowledges that the trainee is competent and recommends that the employee be granted re-qualification in this job scope.		
Steve Carpenter		7.17.13
AKE Manager (Print Name)	Signature	Date

Upon satisfactory completion of this Re-Qualification Checklist, the TRU Programs Manager (or designee) may grant Re-Qualification to the trainee by signing on the cover page of this Re-Qualification Checklist.

DIVIDER

PAGE

AMWTP Advanced Mixed Waste Treatment Project	*Advanced Mixed Waste Treatment Project* *RE- QUALIFICATION CHECKLIST* *ACCEPTABLE KNOWLEDGE EXPERT*	**QCAKE01A** **Rev 3**

Employee Name TIM VENNEMAN S# 7191

ACCEPTABLE KNOWLEDGE EXPERT

Qualification Checklist Number: QCAKE01A

The manager granting re- qualification acknowledges that the employee possesses the knowledge, skills, and abilities to perform this job function correctly the first time, safely and compliantly.

Re-Qualification granted by:	George B	George B	10/16/13
	TRU Programs Manager (Print Name)	Signature	Date

Required Attachments: Check box if attached	Exemption Form (if used) ☐	Remedial Form (if used) ☐

Qual Pack Issued to Trainee by :	Dave Butler	Dave Butler	10/7/13
	Print Name	Signature	Date

Qualification Checklist Approval Section

QC 10/22/13 cf
entered 10/16/13

Line Manager Approval	James Jackson	Signature on file	2/24/11
	Print Name	Signature	Date

Training Manager Approval	Ralph Hartline	Signature on file	2/24/11
	Print Name	Signature	Date

AMWTP Advanced Mixed Waste Treatment Project	*Advanced Mixed Waste Treatment Project* *RE- QUALIFICATION CHECKLIST ACCEPTABLE KNOWLEDGE EXPERT*	**QCAKE01A** **Rev 3**

Employee Name TIM VENNEMAN S# 7195

Revision Record				
Revision Number	Affected Pages	Description of Revision	Management Approval	Date
0	All	Initial Issue	E. Torres	3/1/07
1	All	Complete revision/rewrite. Update Checklist from previous revision.	R. Hartline	7/20/09
2	All	Editorial changes	J. Jackson	9/22/09
3	6	Add items 3.3.12 and 3.3.13 to section 3.3 (Knowledge section).	J. Jackson	2/24/11

Mod Number	Affected Pages	**Modification Record** Description of Change	Management Approval	Date

- Applicable Manager must sign for modifications.

AMWTP Advanced Mixed Waste Treatment Project	*Advanced Mixed Waste Treatment Project* *RE- QUALIFICATION CHECKLIST* *ACCEPTABLE KNOWLEDGE EXPERT*	**QCAKE01A** **Rev 3**

Employee Name TIM VENNEMAN S# 71915

Signature Roster

Personnel signing blocks in this Qualification Checklist must print their name legibly, sign and initial. Sign off by the Evaluator indicates successful performance of the task IAW MP-RTQP-14.13. Copy this sheet if necessary.

Name (Printed)	Signature	Initials
TIM VENNEMAN		TV
Steve Carpenter		SC

AMWTP Advanced Mixed Waste Treatment Project	*Advanced Mixed Waste Treatment Project* *RE- QUALIFICATION CHECKLIST ACCEPTABLE KNOWLEDGE EXPERT*	**QCAKE01A** **Rev 3**

Employee Name TIM VENNEMAN S# 71915

1.0 Scope

Completion of this re-qualification checklist is required for all personnel performing tasks as an Acceptable Knowledge Expert (AKE). This checklist specifies the prerequisite knowledge, training, and OJT objectives necessary to assure the candidate possesses the comprehensive knowledge and skills required for compliant task performance, and is qualified to perform these tasks.

Extended absence (greater than six months) and/or performance deficiencies may result in disqualification of the individual by the AK Manager until any or all conditions are remediated.

Upon successful completion of this checklist, the candidate shall be able to independently perform duties of an AKE.

2.0 Prerequisites

Ensure the trainee has successfully completed the requirements listed below before completing this qualification checklist.

The employees Individual Training Plan (ITP), Form-1020, is current, or has been updated, to include the appropriate RCRA Profile and all courses required for personnel performing tasks in the capacity of an Acceptable Knowledge Expert (AKE).

The employee has completed all initial training *and is current* on the applicable qualifications and/or checklists identified on the ITP to support this qualification checklist.

Manager assigned Completion target date: 10.15.13

Employee's Production Manager — Date: 10.7.13

	Date Requirement Was Completed	**Signature** (Training representative or Manager)	**Date**
2.1 Initial QCAKE01A checklist	10.7.13		10.7.13

AMWTP Advanced Mixed Waste Treatment Project	*Advanced Mixed Waste Treatment Project* *RE- QUALIFICATION CHECKLIST ACCEPTABLE KNOWLEDGE EXPERT*	**QCAKE01A** **Rev 3**

Employee Name TIM VENNEMAN S# 7191J

3.0 Initial & Continuing Training / Knowledge / Required Reading

The training courses identified pertain to the job function/duties and will be verified complete by the AK Manager or Training Specialist.

3.1 Training Courses :	Date Requirement was Complete	Recurring Training Frequency
None		

The Trainee will discuss the Required Reading documents with the qualified OJT Instructor, and/or AK Manager. These items will be signed off by the OJT instructor or AK Manager after the discussion.

3.2 Required Reading:	OJT Instructor / AK Manager Signature	Date
3.2.1 Collection, Review, and Management of Acceptable Knowledge Documentation. (MP-TRUW-8.13)		10.7.13
3.2.2 Preparation of Waste Stream Profile Forms (MP-TRUW-8.14)		10.7.13

The knowledge items identified pertain to the job function/duties and following an acceptable discussion will be signed by the qualified OJT Instructor or AK Manager.

3.3 Knowledge:	OJT Instructor / AK Manager Signature	Date
3.3.4 Discuss the primary site-specific processes associated with waste characterization that augments acceptable knowledge.		10.7.13
3.3.5 Discuss data limitations and discrepancies that may occur in source documents and the process for resolution.		10.7.13
3.3.6 Discuss the required AK information necessary for a baseline summary document.		10.7.13
3.3.7 Discuss when an AK would develop an AK Resolution (AKR) vs. developing an AK Discrepancy Report (DR).		10.7.13

AMWTP Advanced Mixed Waste Treatment Project	Advanced Mixed Waste Treatment Project RE- QUALIFICATION CHECKLIST ACCEPTABLE KNOWLEDGE EXPERT	QCAKE01A Rev 3

Employee Name Tim VENNEMAN S# 7191J

3.3 Knowledge:	OJT Instructor / AK Manager Signature	Date
3.3.8 Discuss how AMWTP designates waste streams.		10.7.13
3.3.9 Discuss the process for assigning Summary Category Groups, Waste Matrix Codes, EPA Hazardous Waste Codes and waste material parameters to a waste stream.		10.7.13
3.3.10 Discuss the preparation and main components of a Waste Stream Profile Form and the associated Characterization Information Summary Report for each Summary Category Group.		10.7.13
3.3.11 Discuss how non-conformances are processed, including discrepancy resolution and reporting.		10.7.13
3.3.12 Discuss how potentially incompatible IDC changes are managed (documented, notifications to be made, etc.)		10.7.13
3.3.13 Discuss any recent lessons learned regarding IDC changes to potentially incompatible containers.		10.7.13

4.0 OJT Training Objectives

The following training objectives are conducted per MP-COPS-9.34, Conduct of Operations Control of On-Shift Training. These elements are to be performed (P), simulated (S) or discussed (D) as appropriate. At the conclusion of the instructions phase, the trainee will be assessed per MP-RTQP-14.13, Performance Assessments. If the trainee cannot perform the task without coaching, terminate the Performance Assessment.

AKE Tasks	P S D	Evaluator Signature & date
4.1.1 Prepare an AKR using Form-1070 for submittal.	P	10.7.13
4.1.2 Prepare the required AMWTP Forms for summarizing and submitting an AK source document for submittal.	P	10.7.13
4.1.3 Access the WTS AK Evaluation screen.	P	10.7.13
4.1.4 Evaluate and resolve a container historical ID.	P	10.7.13

AMWTP Advanced Mixed Waste Treatment Project	*Advanced Mixed Waste Treatment Project* *RE- QUALIFICATION CHECKLIST* *ACCEPTABLE KNOWLEDGE EXPERT*	**QCAKE01A** **Rev 3**

Employee Name TIM VENNEMAN S# 71915

AKE Tasks	P S D	*Evaluator Signature & date*
4.1.5 Manage solids and debris container lots.	(P)	10.7.13
4.1.6 Access and navigate the TrackWise system from NCR creation to verification of NCR closure.	(P)	10.7.13

5.0 **Emergency / Abnormal Conditions**
The AKE must demonstrate adequate knowledge of each Emergency/Abnormal condition listed below through performance, simulation or discussion with an OJT Instructor, AKE Manager or SS. The scope of these items should pertain to the AKE's required duties.

Emergency / Abnormal Conditions	PS D	Evaluator signature	Date
5.1 Fire/Alarm	(S)D		10.7.13
5.2 Location of Fire Extinguishers/Fire Alarms	(P)		10.7.13
5.3 Evacuation Alarm	(S)D		10.7.13
5.4 Injured person	(S)D		10.7.13
5.5 Dropped Waste Container	(S)D		10.7.13
5.6 Breached Waste Container	(S)D		10.7.13
5.7 Take Cover Alarm	(S)D		10.7.13
5.8 CAM Alarm	(S)D		10.7.13
5.9 Spill/Contamination Release	(S)D		10.7.13
5.10 Loss of ventilation/air	(S)D		10.7.13
5.11 Loss of commercial power	(S)D		10.7.13

6.0 **Examinations** (Sections 1-5 must be complete prior to testing)
Written Exam: None

AMWTP Advanced Mixed Waste Treatment Project	*Advanced Mixed Waste Treatment Project* *RE- QUALIFICATION CHECKLIST* *ACCEPTABLE KNOWLEDGE EXPERT*	**QCAKE01A** **Rev 3**

Employee Name TIM VENNEMAN S# 71915

7.0 **Recommendation for Qualification**		
After discussion with the candidate concerning this job scope, the AKE Manager (or designee) acknowledges that the trainee is competent and recommends that the employee be granted re-qualification in this job scope.		
Steve Carpenter		10.7.13
AKE Manager (Print Name)	Signature	Date

Upon satisfactory completion of this Re-Qualification Checklist, the TRU Programs Manager (or designee) may grant Re-Qualification to the trainee by signing on the cover page of this Re-Qualification Checklist.

DIVIDER

PAGE

AMWTP Advanced Mixed Waste Treatment Project	*Advanced Mixed Waste Treatment Project* *RE- QUALIFICATION CHECKLIST* *ACCEPTABLE KNOWLEDGE EXPERT*	**QCAKE01A** **Rev 3**

Employee Name Pam Fetzer S# 085557

ACCEPTABLE KNOWLEDGE EXPERT

Qualification Checklist Number: QCAKE01A

The manager granting re- qualification acknowledges that the employee possesses the knowledge, skills, and abilities to perform this job function correctly the first time, safely and compliantly.

Re-Qualification granted by:	Geo Byram	Eric Hartley for GB	12/17/13
	TRU Programs Manager (Print Name)	Signature	Date

Required Attachments: Check box if attached	Exemption Form (if used) ☐	Remedial Form (if used) ☐

Qual Pack Issued to Trainee by :	P. Reddish	JPDRICC	8/20/13
	Print Name	Signature	Date

Qualification Checklist Approval Section

Line Manager Approval	James Jackson	Signature on file	2/24/11
	Print Name	Signature	Date

Training Manager Approval	Ralph Hartline	Signature on file	2/24/11
	Print Name	Signature	Date

QC 1-9-14 KM

TRAINING DEPT.
DEC 17 2013
Initials KM

AMWTP Advanced Mixed Waste Treatment Project	*Advanced Mixed Waste Treatment Project* *RE- QUALIFICATION CHECKLIST* *ACCEPTABLE KNOWLEDGE EXPERT*	QCAKE01A Rev 3

Employee Name PAM FETZER S# 085557

Revision Record				
Revision Number	Affected Pages	Description of Revision	Management Approval	Date
0	All	Initial Issue	E. Torres	3/1/07
1	All	Complete revision/rewrite. Update Checklist from previous revision.	R. Hartline	7/20/09
2	All	Editorial changes	J. Jackson	9/22/09
3	6	Add items 3.3.12 and 3.3.13 to section 3.3 (Knowledge section).	J. Jackson	2/24/11

Mod Number	Affected Pages	**Modification Record** Description of Change	Management Approval	Date

- Applicable Manager must sign for modifications.

AMWTP Advanced Mixed Waste Treatment Project	*Advanced Mixed Waste Treatment Project* *RE- QUALIFICATION CHECKLIST* *ACCEPTABLE KNOWLEDGE EXPERT*	**QCAKE01A** **Rev 3**

Employee Name PAM FETZER S# 685557

Signature Roster

Personnel signing blocks in this Qualification Checklist must print their name legibly, sign and initial. Sign off by the Evaluator indicates successful performance of the task IAW MP-RTQP-14.13. Copy this sheet if necessary.

Name (Printed)	Signature	Initials
P. REDDISH	P REDDISH	R
George Byram	George B	B
Steve Carpenter		SC

AMWTP Advanced Mixed Waste Treatment Project	*Advanced Mixed Waste Treatment Project* *RE- QUALIFICATION CHECKLIST* *ACCEPTABLE KNOWLEDGE EXPERT*	**QCAKE01A** **Rev 3**

Employee Name PAM FETZER S# 085557

1.0 Scope

Completion of this re-qualification checklist is required for all personnel performing tasks as an Acceptable Knowledge Expert (AKE). This checklist specifies the prerequisite knowledge, training, and OJT objectives necessary to assure the candidate possesses the comprehensive knowledge and skills required for compliant task performance, and is qualified to perform these tasks.

Extended absence (greater than six months) and/or performance deficiencies may result in disqualification of the individual by the AK Manager until any or all conditions are remediated.

Upon successful completion of this checklist, the candidate shall be able to independently perform duties of an AKE.

2.0 Prerequisites

Ensure the trainee has successfully completed the requirements listed below before completing this qualification checklist.

The employees Individual Training Plan (ITP), Form-1020, is current, or has been updated, to include the appropriate RCRA Profile and all courses required for personnel performing tasks in the capacity of an Acceptable Knowledge Expert (AKE).

The employee has completed all initial training *and is current* on the applicable qualifications and/or checklists identified on the ITP to support this qualification checklist.

Manager assigned Completion target date: 12.16.13

Employee's Production Manager

12.12.13
Date

	Date Requirement Was Completed	**Signature** (Training representative or Manager)	**Date**
2.1 Initial QCAKE01A checklist	10/20/11	JPD Rec'd	8/20/13

AMWTP Advanced Mixed Waste Treatment Project	*Advanced Mixed Waste Treatment Project* *RE- QUALIFICATION CHECKLIST* *ACCEPTABLE KNOWLEDGE EXPERT*	QCAKE01A Rev 3

Employee Name PAM FETZER S# 085557

3.0 Initial & Continuing Training / Knowledge / Required Reading

The training courses identified pertain to the job function/duties and will be verified complete by the AK Manager or Training Specialist.

3.1 Training Courses :	Date Requirement was Complete	Recurring Training Frequency
None		

The Trainee will discuss the Required Reading documents with the qualified OJT Instructor, and/or AK Manager. These items will be signed off by the OJT instructor or AK Manager after the discussion.

3.2 Required Reading:	OJT Instructor / AK Manager Signature	Date
3.2.1 Collection, Review, and Management of Acceptable Knowledge Documentation. (MP-TRUW-8.13)		12/12/13
3.2.2 Preparation of Waste Stream Profile Forms (MP-TRUW-8.14)		12/12/13

The knowledge items identified pertain to the job function/duties and following an acceptable discussion will be signed by the qualified OJT Instructor or AK Manager.

3.3 Knowledge:	OJT Instructor / AK Manager Signature	Date
3.3.4 Discuss the primary site-specific processes associated with waste characterization that augments acceptable knowledge.		12,12,13
3.3.5 Discuss data limitations and discrepancies that may occur in source documents and the process for resolution.		12/12/13
3.3.6 Discuss the required AK information necessary for a baseline summary document.		12/12/13
3.3.7 Discuss when an AK would develop an AK Resolution (AKR) vs. developing an AK Discrepancy Report (DR).		12/12/13

AMWTP Advanced Mixed Waste Treatment Project	*Advanced Mixed Waste Treatment Project* *RE- QUALIFICATION CHECKLIST* *ACCEPTABLE KNOWLEDGE EXPERT*	QCAKE01A Rev 3

Employee Name PAM FETZER S# 085557

3.3 Knowledge:	OJT Instructor / AK Manager Signature	Date
3.3.8 Discuss how AMWTP designates waste streams.		12.12.13
3.3.9 Discuss the process for assigning Summary Category Groups, Waste Matrix Codes, EPA Hazardous Waste Codes and waste material parameters to a waste stream.		12.12.13
3.3.10 Discuss the preparation and main components of a Waste Stream Profile Form and the associated Characterization Information Summary Report for each Summary Category Group.		12.12.13
3.3.11 Discuss how non-conformances are processed, including discrepancy resolution and reporting.		12.12.13
3.3.12 Discuss how potentially incompatible IDC changes are managed (documented, notifications to be made, etc.)		12.12.13
3.3.13 Discuss any recent lessons learned regarding IDC changes to potentially incompatible containers.		12.12.13

4.0 OJT Training Objectives

The following training objectives are conducted per MP-COPS-9.34, Conduct of Operations Control of On-Shift Training. These elements are to be performed (P), simulated (S) or discussed (D) as appropriate. At the conclusion of the instructions phase, the trainee will be assessed per MP-RTQP-14.13, Performance Assessments. If the trainee cannot perform the task without coaching, terminate the Performance Assessment.

AKE Tasks	P S D	*Evaluator Signature & date*
4.1.1 *Prepare* an AKR using Form-1070 for submittal.	P	12/12/13
4.1.2 Prepare the required AMWTP Forms for summarizing and submitting an AK source document for submittal.	P	SC 12/12/13
4.1.3 Access the WTS AK Evaluation screen.	P	SC 12.12.13
4.1.4 Evaluate and resolve a container historical ID.	P	SC 12/12.13

AMWTP Advanced Mixed Waste Treatment Project	*Advanced Mixed Waste Treatment Project* *RE- QUALIFICATION CHECKLIST* *ACCEPTABLE KNOWLEDGE EXPERT*	**QCAKE01A** **Rev 3**

Employee Name PAM FETZER S# 085557

AKE Tasks	PSD	Evaluator Signature & date
4.1.5 Manage solids and debris container lots.	(P)	SC 12/2/13
4.1.6 Access and navigate the TrackWise system from NCR creation to verification of NCR closure.	(P)	SC 12/2/13

5.0 **Emergency / Abnormal Conditions**
The AKE must demonstrate adequate knowledge of each Emergency/Abnormal condition listed below through performance, simulation or discussion with an OJT Instructor, AKE Manager or SS. The scope of these items should pertain to the AKE's required duties.

Emergency / Abnormal Conditions	PSD	Evaluator signature	Date
5.1 Fire/Alarm	S(D)	Geo B	10/8/13
5.2 Location of Fire Extinguishers/Fire Alarms	P	Geo B	10/8/13
5.3 Evacuation Alarm	S(D)	Geo B	10/8/13
5.4 Injured person	S(D)	Geo B	10/8/13
5.5 Dropped Waste Container	S(D)	Geo B	10/8/13
5.6 Breached Waste Container	S(D)	Geo B	10/8/13
5.7 Take Cover Alarm	S(D)	Geo B	10/8/13
5.8 CAM Alarm	S(D)	Geo B	10/8/13
5.9 Spill/Contamination Release	S(D)	Geo B	10/8/13
5.10 Loss of ventilation/air	S(D)	Geo B	10/8/13
5.11 Loss of commercial power	S(D)	Geo B	10/8/13

6.0 **Examinations** (Sections 1-5 must be complete prior to testing)
Written Exam: None

AMWTP Advanced Mixed Waste Treatment Project	*Advanced Mixed Waste Treatment Project* *RE- QUALIFICATION CHECKLIST* *ACCEPTABLE KNOWLEDGE EXPERT*	**QCAKE01A** **Rev 3**

Employee Name PAM FETZER S# 085557

7.0 **Recommendation for Qualification**		
After discussion with the candidate concerning this job scope, the AKE Manager (or designee) acknowledges that the trainee is competent and recommends that the employee be granted re-qualification in this job scope.		
Steve Carpenter AKE Manager (Print Name)	Signature	12/2/13 Date

Upon satisfactory completion of this Re-Qualification Checklist, the TRU Programs Manager (or designee) may grant Re-Qualification to the trainee by signing on the cover page of this Re-Qualification Checklist.

DIVIDER

PAGE

AMWTP Advanced Mixed Waste Treatment Project	*Advanced Mixed Waste Treatment Project* *INITIAL QUALIFICATION CHECKLIST* *ACCEPTABLE KNOWLEDGE EXPERT*	**QCAKE01A** **Rev 3**

Employee Name DAN ARRENHOLZ S# 063653

ACCEPTABLE KNOWLEDGE EXPERT

Qualification Checklist Number: QCAKE01A

The manager granting qualification acknowledges that the employee possesses the knowledge, skills, and abilities to perform this job function correctly the first time, safely and compliantly.

Qualification granted by:			
	TRU Programs Manager (Print Name)	Signature	Date 9/3/14

Required Attachments: Check box if attached	Exemption Form (if used) ☐	Remedial Form (if used) ☐

Qual Checklist Issued to Trainee by :			
	Amy Betzer Print Name	Amy Betzer Signature	Date 7/2/14

Qualification Checklist Approval Section

Line Manager Approval	James Jackson Print Name	Signature on file Signature	2/24/11 Date

TRAINING DEPT.
SEP 04 2014

Training Manager Approval	Ralph Hartline Print Name	Signature on file Signature	2/24/11 Date

Initials: MB

AMWTP Advanced Mixed Waste Treatment Project	*Advanced Mixed Waste Treatment Project* *INITIAL QUALIFICATION CHECKLIST* *ACCEPTABLE KNOWLEDGE EXPERT*	**QCAKE01A** **Rev 3**

Employee Name DAN ARBENHOLZ S# 063653

Revision Record

Revision Number	Affected Pages	Description of Revision	Management Approval	Date
0	All	Initial Issue	E. Torres	3/1/07
1	All	Complete revision/rewrite. Update Checklist from previous revision.	R. Hartline	7/20/09
2	All	Editorial changes and added requal checklist	J. Jackson	9/22/09
3	5, 6	Pg. 5: add 3.2.10 (INST-TRUW-8.13.3, TRU Program Acceptable Knowledge Process); Pg. 7: add 3.3.13 and 3.3.14 to Knowledge section (3.3).	J. Jackson	2/24/11

Modification Record

Mod Number	Affected Pages	Description of Change	Management Approval	Date

- Applicable Manager must sign for modifications.

AMWTP Advanced Mixed Waste Treatment Project	*Advanced Mixed Waste Treatment Project* *INITIAL QUALIFICATION CHECKLIST* *ACCEPTABLE KNOWLEDGE EXPERT*	**QCAKE01A** **Rev 3**

Employee Name DAN ARRENHOLZ S# 063653

Signature Roster

Personnel signing blocks in this Qualification Checklist must print their name legibly, sign and initial. Sign off by the Evaluator indicates successful performance of the task IAW MP-RTQP-14.13. Copy this sheet if necessary.

Name (Printed)	Signature	Initials
Amy Betzer	Amy Betzer	AB
Steve Carpenter		SC
George Bynum	George Bynum	GB

AMWTP Advanced Mixed Waste Treatment Project	*Advanced Mixed Waste Treatment Project* *INITIAL QUALIFICATION CHECKLIST* *ACCEPTABLE KNOWLEDGE EXPERT*	**QCAKE01A** **Rev 3**

Employee Name DAN ARREHOLZ S# 065653

1.0 Scope

Completion of this qualification checklist is required for all personnel performing tasks as an Acceptable Knowledge Expert (AKE). This checklist specifies the prerequisite knowledge, training, and OJT objectives necessary to assure the candidate possesses the comprehensive knowledge and skills required for compliant task performance, and is qualified to perform these tasks.

The candidate is allowed six months from the date of receipt of the document to complete all activities. This qualification expires 24 months after the grant date. Maintaining qualification requires the individual to complete requalification prior to expiration of this qualification.

Extended absence (greater than six months) and/or performance deficiencies may result in disqualification of the individual by the AK Manager until any or all conditions are remediated.

Upon successful completion of this checklist, the candidate shall be able to independently perform duties of an AKE.

2.0 Prerequisites

Ensure the trainee has successfully completed the requirements listed below before completing this qualification checklist.

The Employee Position Description (EPD), Form-1018 has been reviewed or a new one completed to ensure the duties of this position are included and to verify the education and experience requirements have been satisfied. (MP-RTQP-14.1).

The employees Individual Training Plan (ITP), Form-1020, is current, or has been updated, to include the appropriate RCRA Profile and all courses required for personnel performing tasks in the capacity of an Acceptable Knowledge Expert (AKE).

The employee has completed all initial training *and is current* on the applicable qualifications and/or checklists identified on the ITP to support this qualification checklist.

Completion target date: 8.28.14

Employee's Production Manager

8.21.14
Date

AMWTP Advanced Mixed Waste Treatment Project	*Advanced Mixed Waste Treatment Project* *INITIAL QUALIFICATION CHECKLIST* *ACCEPTABLE KNOWLEDGE EXPERT*	**QCAKE01A** **Rev 3**

Employee Name DAN ARRENHOLZ S# 063653

3.0 Initial & Continuing Training / Knowledge / Required Reading

The initial training courses identified pertain to the job function/duties and will be verified complete by the AK Manager or Training Specialist.

3.1 Training Courses :	Date Requirement was Complete	Recurring Training Frequency
None	N/A	N/A

The Trainee will discuss the Required Reading documents with the qualified OJT Instructor, and/or AK Manager. These items will be signed off by the OJT instructor or AK Manager after the discussion.

3.2 Required Reading:	OJT Instructor / AK Manager Signature	Date
3.2.1 Federal RCRA Regulations Associated with Solid and Hazardous Waste Determinations (40 CFR 260 to 265 and 268)		8.14.14
3.2.2 WIPP Hazardous Waste Permit Waste Analysis Plan (NM4890139088)		8.21.14
3.2.3 CH-TRU Waste Content Codes (DOE-WIPP-01-3194)		8.21.14
3.2.4 Transuranic Waste Acceptance Criteria for the Waste Isolation Pilot Plant (DOE/WIPP-02-3122)		8.21.14
3.2.5 Advanced Mixed Waste Treatment Project Quality Assurance Program Plan (QAPP-01)		8.21.14
3.2.6 Certification Plan for INL Transuranic Waste (MP-TRUW-8.1)		8.21.14
3.2.7 Quality Assurance Project Plan. (MP-TRUW-8.2)		8.21.14
3.2.8 Collection, Review, and Management of Acceptable Knowledge Documentation. (MP-TRUW-8.13)		8.21.14
3.2.9 Preparation of Waste Stream Profile Forms (MP-TRUW-8.14)		8.21.14
3.2.10 TRU Program Acceptable Knowledge Process (INST-TRUW-8.13.3)		8.21.14

AMWTP Advanced Mixed Waste Treatment Project	*Advanced Mixed Waste Treatment Project* *INITIAL QUALIFICATION CHECKLIST* *ACCEPTABLE KNOWLEDGE EXPERT*	**QCAKE01A** **Rev 3**

Employee Name Dan Arrenholz S# 063653

The knowledge items pertain to the job function/duties and following an acceptable discussion will be signed by the qualified OJT Instructor or AK Manager.

3.3 Knowledge:	OJT Instructor / AK Manager Signature	Date
3.3.1 Applicable AK requirements IAW MP-TRU-8.2, Quality Assurance Project Plan.		8.21.14
3.3.2 Discuss the primary site-specific procedures associated with waste characterization using acceptable knowledge.		8.21.14
3.3.3 Discuss the state and federal RCRA regulations associated with solid and hazardous waste determinations.		8.21.14
3.3.4 Discuss the various types of AK source documentation collected for compilation into an auditable record.		8.21.14
3.3.5 Discuss data limitations and discrepancies that may occur in source documents and the process for resolution.		8.21.14
3.3.6 Discuss when an AK would develop an AK Resolution (AKR) vs. developing an AK Discrepancy Report (DR).		8.21.14
3.3.7 Discuss the consolidation of all historical AK information into a baseline summary document.		8.21.14
3.3.8 Discuss the process of summarizing an AK Source Document utilizing AMWTP Form-1068.		8.27.14
3.3.9 Discuss how AMWTP has developed waste streams that will be characterized using AK.		8.27.14
3.3.10 Discuss the process for designating Summary Category Groups, Waste Matrix Codes, EPA Hazardous Waste Codes and waste material parameters to a waste stream.		8.27.14
3.3.11 Discuss the preparation and main components of a Waste Stream Profile Form and the associated Characterization Information Summary Report.		8.27.14
3.3.12 Discuss how non-conformances are processed, including discrepancy resolution and reporting.		8.27.14

AMWTP Advanced Mixed Waste Treatment Project	*Advanced Mixed Waste Treatment Project* *INITIAL QUALIFICATION CHECKLIST* *ACCEPTABLE KNOWLEDGE EXPERT*	QCAKE01A Rev 3

Employee Name DAN ARRENHOLZ S# 063653

3.3 Knowledge:	OJT Instructor / AK Manager Signature	Date
3.3.13 Discuss how potentially incompatible IDC changes are managed (documented, notifications to be made, etc.)		8.27.14
3.3.14 Discuss any recent lessons learned regarding IDC changes to potentially incompatible containers.		8.27.14

4.0 OJT Training Objectives

The following training objectives are conducted per MP-COPS-9.34, Conduct of Operations Control of On-Shift Training. These elements are to be performed (P), simulated (S) or discussed (D) as appropriate. At the conclusion of the instructions phase, the trainee will be assessed per MP-RTQP-14.13, Performance Assessments. If the trainee cannot perform the task without coaching, terminate the Performance Assessment.

AKE Tasks		P S D	*OJT Inst. Initials*	*Evaluator Signature & date*
4.1.1	Prepare an AKR using Form-1070.	P	SC	8.27.14
4.1.2	Prepare the required AMWTP Forms for summarizing and submitting an AK source document.	P	SC	8.27.14
4.1.3	Access the Waste Tracking System (WTS) and locate screens used by the AKE, including the AK Evaluation (container queue) screens.	P	SC	8.27.14
4.1.4	Evaluate and resolve container historical IDs in WTS.	P	SC	8.27.14
4.1.5	Manage core and debris container lots.	P	SC	8.27.14
4.1.6	Access and navigate the Track wise system from NCR creation to verification of NCR closure.	P	SC	8.27.14

AMWTP Advanced Mixed Waste Treatment Project	*Advanced Mixed Waste Treatment Project* *INITIAL QUALIFICATION CHECKLIST* *ACCEPTABLE KNOWLEDGE EXPERT*	**QCAKE01A** **Rev 3**

Employee Name DAN ARRENHOLZ S# 063653

5.0 **Emergency / Abnormal Conditions**
The AKE must demonstrate adequate knowledge of each Emergency/Abnormal condition listed below through performance, simulation or discussion with an OJT Instructor, AKE Manager or SS. The scope of these items should pertain to the AKE's required duties.

Emergency / Abnormal Conditions	PS D	Evaluator signature	Date
5.1 Fire/Alarm	S D		8.27.14
5.2 Location of Fire Extinguishers/Fire Alarms	P		8.27.14
5.3 Evacuation Alarm	S D		8.27.14
5.4 Injured person	S D		8.27.14
5.5 Dropped Waste Container	S D		8.27.14
5.6 Breached Waste Container	S D		8.27.14
5.7 Take Cover Alarm	S D		8.27.14
5.8 CAM Alarm	S D		8.27.14
5.9 Spill/Contamination Release	S D		8.27.14
5.10 Loss of ventilation/air	S D		8.27.14
5.11 Loss of commercial power	S D		8.27.14

AMWTP Advanced Mixed Waste Treatment Project	*Advanced Mixed Waste Treatment Project* *INITIAL QUALIFICATION CHECKLIST* *ACCEPTABLE KNOWLEDGE EXPERT*	**QCAKE01A** **Rev 3**

Employee Name Dan Arrendondo S# 063653

6.0 **Examinations** (Sections 1-5 must be complete prior to testing)
Written Exam: None

7.0 **Recommendation for Qualification**		
After discussion with the candidate concerning this job scope, the AKE Manager (or designee) acknowledges that the trainee is competent and recommends that the employee be granted qualification in this job scope.		
Steve Carpenter AKE Manager (Print Name)	Signature	8.27.14 Date

Upon satisfactory completion of this Qualification Checklist, the TRU Programs Manager (or designee) may grant Qualification to the trainee by signing on the cover page of this Qualification Checklist.

DIVIDER

PAGE

AMWTP Advanced Mixed Waste Treatment Project	*Advanced Mixed Waste Treatment Project* *RE- QUALIFICATION CHECKLIST* *ACCEPTABLE KNOWLEDGE EXPERT*	**QCAKE01A** **Rev 3**

Employee Name Randall Morris S# 65807

ACCEPTABLE KNOWLEDGE EXPERT

Qualification Checklist Number: QCAKE01A

The manager granting re- qualification acknowledges that the employee possesses the knowledge, skills, and abilities to perform this job function correctly the first time, safely and compliantly.

Re-Qualification granted by:	Wes Skaar	Wes Skaar	6-27-13
	TRU Programs Manager (Print Name)	Signature	Date

Required Attachments: Check box if attached	Exemption Form (if used) ☐	Remedial Form (if used) ☐

Qual Pack Issued to Trainee by :	Dave Butler	Dave Butler	4/23/13
	Print Name	Signature	Date

Qualification Checklist Approval Section

Line Manager Approval	James Jackson	Signature on file	2/24/11
	Print Name	Signature	Date

Training Manager Approval	Ralph Hartline	Signature on file	2/24/11
	Print Name	Signature	Date

TRAINING DEPT
JUL 01 2013

Initials R

QC 7/1/13
D

AMWTP Advanced Mixed Waste Treatment Project	*Advanced Mixed Waste Treatment Project* *RE- QUALIFICATION CHECKLIST ACCEPTABLE KNOWLEDGE EXPERT*	**QCAKE01A** **Rev 3**

Employee Name Randall Morris S# 65807

Revision Record

Revision Number	Affected Pages	Description of Revision	Management Approval	Date
0	All	Initial Issue	E. Torres	3/1/07
1	All	Complete revision/rewrite. Update Checklist from previous revision.	R. Hartline	7/20/09
2	All	Editorial changes	J. Jackson	9/22/09
3	6	Add items 3.3.12 and 3.3.13 to section 3.3 (Knowledge section).	J. Jackson	2/24/11

Mod Number	Affected Pages	**Modification Record** Description of Change	Management Approval	Date

- Applicable Manager must sign for modifications.

AMWTP Advanced Mixed Waste Treatment Project	*Advanced Mixed Waste Treatment Project* *RE- QUALIFICATION CHECKLIST* *ACCEPTABLE KNOWLEDGE EXPERT*	**QCAKE01A** **Rev 3**

Employee Name Randall Morris S# 65807

Signature Roster

Personnel signing blocks in this Qualification Checklist must print their name legibly, sign and initial. Sign off by the Evaluator indicates successful performance of the task IAW MP-RTQP-14.13. Copy this sheet if necessary.

Name (Printed)	Signature	Initials
Dave Bottler	Dave Bottler	DB
Caralea Hinkle-Daniel	Caralea Hinkle-Daniel	CHD
Steve Carpenter		SC
Wes Skaar	Wes Skaar	WS

AMWTP Advanced Mixed Waste Treatment Project	*Advanced Mixed Waste Treatment Project* *RE- QUALIFICATION CHECKLIST ACCEPTABLE KNOWLEDGE EXPERT*	**QCAKE01A** **Rev 3**

Employee Name Randall Morris S# 65807

1.0 Scope

Completion of this re-qualification checklist is required for all personnel performing tasks as an Acceptable Knowledge Expert (AKE). This checklist specifies the prerequisite knowledge, training, and OJT objectives necessary to assure the candidate possesses the comprehensive knowledge and skills required for compliant task performance, and is qualified to perform these tasks.

Extended absence (greater than six months) and/or performance deficiencies may result in disqualification of the individual by the AK Manager until any or all conditions are remediated.

Upon successful completion of this checklist, the candidate shall be able to independently perform duties of an AKE.

2.0 Prerequisites

Ensure the trainee has successfully completed the requirements listed below before completing this qualification checklist.

The employees Individual Training Plan (ITP), Form-1020, is current, or has been updated, to include the appropriate RCRA Profile and all courses required for personnel performing tasks in the capacity of an Acceptable Knowledge Expert (AKE).

The employee has completed all initial training *and is current* on the applicable qualifications and/or checklists identified on the ITP to support this qualification checklist.

Manager assigned Completion target date: 6.27.13

Employee's Production Manager

6.27.13
Date

	Date Requirement Was Completed	**Signature** (Training representative or Manager)	**Date**
2.1 Initial QCAKE01A checklist	7-7-2011		4-23-2013

AMWTP Advanced Mixed Waste Treatment Project	*Advanced Mixed Waste Treatment Project* *RE- QUALIFICATION CHECKLIST* *ACCEPTABLE KNOWLEDGE EXPERT*	**QCAKE01A** **Rev 3**

Employee Name Randall Morris S# 65807

3.0 Initial & Continuing Training / Knowledge / Required Reading

The training courses identified pertain to the job function/duties and will be verified complete by the AK Manager or Training Specialist.

3.1 Training Courses :	Date Requirement was Complete	Recurring Training Frequency
None		

The Trainee will discuss the Required Reading documents with the qualified OJT Instructor, and/or AK Manager. These items will be signed off by the OJT instructor or AK Manager after the discussion.

3.2 Required Reading:	OJT Instructor / AK Manager Signature	Date
3.2.1 Collection, Review, and Management of Acceptable Knowledge Documentation. (MP-TRUW-8.13)		6.27.13
3.2.2 Preparation of Waste Stream Profile Forms (MP-TRUW-8.14)		6.27.13

The knowledge items identified pertain to the job function/duties and following an acceptable discussion will be signed by the qualified OJT Instructor or AK Manager.

3.3 Knowledge:	OJT Instructor / AK Manager Signature	Date
3.3.4 ✓ Discuss the primary site-specific processes associated with waste characterization that augments acceptable knowledge.		6.27.13
3.3.5 ✓ Discuss data limitations and discrepancies that may occur in source documents and the process for resolution.		6.27.13
3.3.6 ✓ Discuss the required AK information necessary for a baseline summary document.		6.27.13
3.3.7 ✓ Discuss when an AK would develop an AK Resolution (AKR) vs. developing an AK Discrepancy Report (DR).		6.27.13

AMWTP Advanced Mixed Waste Treatment Project	*Advanced Mixed Waste Treatment Project* *RE- QUALIFICATION CHECKLIST ACCEPTABLE KNOWLEDGE EXPERT*	**QCAKE01A** **Rev 3**

Employee Name Randall Morris S# 65807

3.3 Knowledge:	OJT Instructor / AK Manager Signature	Date
3.3.8 Discuss how AMWTP designates waste streams.		6.27.13
3.3.9 Discuss the process for assigning Summary Category Groups, Waste Matrix Codes, EPA Hazardous Waste Codes and waste material parameters to a waste stream.		6.27.13
3.3.10 Discuss the preparation and main components of a Waste Stream Profile Form and the associated Characterization Information Summary Report for each Summary Category Group.		6.27.13
3.3.11 Discuss how non-conformances are processed, including discrepancy resolution and reporting.		6.27.13
3.3.12 Discuss how potentially incompatible IDC changes are managed (documented, notifications to be made, etc.)		6.27.13
3.3.13 Discuss any recent lessons learned regarding IDC changes to potentially incompatible containers.		6.27.13

4.0 OJT Training Objectives

The following training objectives are conducted per MP-COPS-9.34, Conduct of Operations Control of On-Shift Training. These elements are to be performed (P), simulated (S) or discussed (D) as appropriate. At the conclusion of the instructions phase, the trainee will be assessed per MP-RTQP-14.13, Performance Assessments. If the trainee cannot perform the task without coaching, terminate the Performance Assessment.

AKE Tasks	P S D	Evaluator Signature & date
4.1.1 Prepare an AKR using Form-1070 for submittal.	P	6.27.13
4.1.2 Prepare the required AMWTP Forms for summarizing and submitting an AK source document for submittal.	P	6.27.13
4.1.3 Access the WTS AK Evaluation screen.	P	6.27.13
4.1.4 Evaluate and resolve a container historical ID.	P	6.27.13

AMWTP Advanced Mixed Waste Treatment Project	*Advanced Mixed Waste Treatment Project* *RE- QUALIFICATION CHECKLIST* *ACCEPTABLE KNOWLEDGE EXPERT*	**QCAKE01A** **Rev 3**

Employee Name Randall Morris S# 65807

AKE Tasks	P S D	*Evaluator Signature & date*
4.1.5 Manage solids and debris container lots.	P	6.27.13
4.1.6 Access and navigate the TrackWise system from NCR creation to verification of NCR closure.	P	6.27.13

5.0 Emergency / Abnormal Conditions

The AKE must demonstrate adequate knowledge of each Emergency/Abnormal condition listed below through performance, simulation or discussion with an OJT Instructor, AKE Manager or SS. The scope of these items should pertain to the AKE's required duties.

Emergency / Abnormal Conditions	PS D	Evaluator signature	Date
5.1 Fire/Alarm	S D	Caralea Huckle-Darnell	5-7-13
5.2 Location of Fire Extinguishers/Fire Alarms	P	Caralea Huckle-Darnell	5-7-13
5.3 Evacuation Alarm	S D	Caralea Huckle-Darnell	5-7-13
5.4 Injured person	S D	Caralea Huckle-Darnell	5-7-13
5.5 Dropped Waste Container	S D	Caralea Huckle-Darnell	5-7-13
5.6 Breached Waste Container	S D	Caralea Huckle-Darnell	5-7-13
5.7 Take Cover Alarm	S D	Caralea Huckle-Darnell	5-7-13
5.8 CAM Alarm	S D	Caralea Huckle-Darnell	5-7-13
5.9 Spill/Contamination Release	S D	Caralea Huckle-Darnell	5-7-13
5.10 Loss of ventilation/air	S D	Caralea Huckle-Darnell	5-7-13
5.11 Loss of commercial power	S D	Caralea Huckle-Darnell	5-7-13

6.0 Examinations (Sections 1-5 must be complete prior to testing)

Written Exam: None

AMWTP Advanced Mixed Waste Treatment Project	*Advanced Mixed Waste Treatment Project* *RE- QUALIFICATION CHECKLIST ACCEPTABLE KNOWLEDGE EXPERT*	**QCAKE01A** **Rev 3**

Employee Name Randall Morris S# 65807

7.0 **Recommendation for Qualification**		
After discussion with the candidate concerning this job scope, the AKE Manager (or designee) acknowledges that the trainee is competent and recommends that the employee be granted re-qualification in this job scope.		
Steve Carpenter AKE Manager (Print Name)	 Signature	6.27.13 Date

Upon satisfactory completion of this Re-Qualification Checklist, the TRU Programs Manager (or designee) may grant Re-Qualification to the trainee by signing on the cover page of this Re-Qualification Checklist.

DIVIDER

PAGE

AMWTP Advanced Mixed Waste Treatment Project	*Advanced Mixed Waste Treatment Project* *RE- QUALIFICATION CHECKLIST* *ACCEPTABLE KNOWLEDGE EXPERT*	**QCAKE01A** **Rev 3**

Employee Name Steve Carpenter S# 104550

ACCEPTABLE KNOWLEDGE EXPERT

Qualification Checklist Number: QCAKE01A

The manager granting re- qualification acknowledges that the employee possesses the knowledge, skills, and abilities to perform this job function correctly the first time, safely and compliantly.

Re-Qualification granted by:	George Byram	George Byram	9/18/14
	TRU Programs Manager (Print Name)	Signature	Date

Required Attachments: Check box if attached	Exemption Form (if used) ☐	Remedial Form (if used) ☐

Qual Pack Issued to Trainee by :	Kathy Merrill	Kathy Merrill	9-18-14
	Print Name	Signature	Date

Qualification Checklist Approval Section

Line Manager Approval	James Jackson	Signature on file	2/24/11
	Print Name	Signature	Date

Training Manager Approval	Ralph Hartline	Signature on file	2/24/11
	Print Name	Signature	Date

AMWTP Advanced Mixed Waste Treatment Project	*Advanced Mixed Waste Treatment Project* *RE- QUALIFICATION CHECKLIST* *ACCEPTABLE KNOWLEDGE EXPERT*	**QCAKE01A** **Rev 3**

Employee Name Steve Carpenter S# 104550

Revision Record				
Revision Number	Affected Pages	Description of Revision	Management Approval	Date
0	All	Initial Issue	E. Torres	3/1/07
1	All	Complete revision/rewrite. Update Checklist from previous revision.	R. Hartline	7/20/09
2	All	Editorial changes	J. Jackson	9/22/09
3	6	Add items 3.3.12 and 3.3.13 to section 3.3 (Knowledge section).	J. Jackson	2/24/11

Mod Number	Affected Pages	**Modification Record** Description of Change	Management Approval	Date

- Applicable Manager must sign for modifications.

AMWTP Advanced Mixed Waste Treatment Project	*Advanced Mixed Waste Treatment Project* *RE- QUALIFICATION CHECKLIST ACCEPTABLE KNOWLEDGE EXPERT*	**QCAKE01A** **Rev 3**

Employee Name Steve Carpenter S# 104550

Signature Roster

Personnel signing blocks in this Qualification Checklist must print their name legibly, sign and initial. Sign off by the Evaluator indicates successful performance of the task IAW MP-RTQP-14.13. Copy this sheet if necessary.

Name (Printed)	Signature	Initials
Kathy Merrill	Kathy Merrill	KM
George Byram	George B	B

AMWTP Advanced Mixed Waste Treatment Project	*Advanced Mixed Waste Treatment Project* *RE- QUALIFICATION CHECKLIST ACCEPTABLE KNOWLEDGE EXPERT*	**QCAKE01A** **Rev 3**

Employee Name Steve Carpenter S# 104550

1.0 Scope

Completion of this re-qualification checklist is required for all personnel performing tasks as an Acceptable Knowledge Expert (AKE). This checklist specifies the prerequisite knowledge, training, and OJT objectives necessary to assure the candidate possesses the comprehensive knowledge and skills required for compliant task performance, and is qualified to perform these tasks.

Extended absence (greater than six months) and/or performance deficiencies may result in disqualification of the individual by the AK Manager until any or all conditions are remediated.

Upon successful completion of this checklist, the candidate shall be able to independently perform duties of an AKE.

2.0 Prerequisites

Ensure the trainee has successfully completed the requirements listed below before completing this qualification checklist.

The employees Individual Training Plan (ITP), Form-1020, is current, or has been updated, to include the appropriate RCRA Profile and all courses required for personnel performing tasks in the capacity of an Acceptable Knowledge Expert (AKE).

The employee has completed all initial training *and is current* on the applicable qualifications and/or checklists identified on the ITP to support this qualification checklist.

Manager assigned Completion target date: 9/18/14

George Bay — Employee's Production Manager — 9/18/14 Date

	Date Requirement Was Completed	**Signature** (Training representative or Manager)	**Date**
2.1 Initial QCAKE01A checklist	10-26-06	Karen Mercer	9-18-14

Employee Name Steve Carpenter S# 104550

3.0 Initial & Continuing Training / Knowledge / Required Reading

The training courses identified pertain to the job function/duties and will be verified complete by the AK Manager or Training Specialist.

3.1 Training Courses :	Date Requirement was Complete	Recurring Training Frequency
None		

The Trainee will discuss the Required Reading documents with the qualified OJT Instructor, and/or AK Manager. These items will be signed off by the OJT instructor or AK Manager after the discussion.

3.2 Required Reading:	OJT Instructor / AK Manager Signature	Date
3.2.1 Collection, Review, and Management of Acceptable Knowledge Documentation. (MP-TRUW-8.13)	George Bu	9/18/14
3.2.2 Preparation of Waste Stream Profile Forms (MP-TRUW-8.14)	George Bu	9/18/14

The knowledge items identified pertain to the job function/duties and following an acceptable discussion will be signed by the qualified OJT Instructor or AK Manager.

3.3 Knowledge:	OJT Instructor / AK Manager Signature	Date
3.3.4 Discuss the primary site-specific processes associated with waste characterization that augments acceptable knowledge.	George Bu	9/18/14
3.3.5 Discuss data limitations and discrepancies that may occur in source documents and the process for resolution.	George Bu	9/18/14
3.3.6 Discuss the required AK information necessary for a baseline summary document.	George Bu	9/18/14
3.3.7 Discuss when an AK would develop an AK Resolution (AKR) vs. developing an AK Discrepancy Report (DR).	George Bu	9/18/14

Employee Name Steve Carpenter S# 104550

3.3 Knowledge:	OJT Instructor / AK Manager Signature	Date
3.3.8 Discuss how AMWTP designates waste streams.	George B	9/18/14
3.3.9 Discuss the process for assigning Summary Category Groups, Waste Matrix Codes, EPA Hazardous Waste Codes and waste material parameters to a waste stream.	George B	9/18/14
3.3.10 Discuss the preparation and main components of a Waste Stream Profile Form and the associated Characterization Information Summary Report for each Summary Category Group.	George B	9/18/14
3.3.11 Discuss how non-conformances are processed, including discrepancy resolution and reporting.	George B	9/18/14
3.3.12 Discuss how potentially incompatible IDC changes are managed (documented, notifications to be made, etc.)	George B	9/18/14
3.3.13 Discuss any recent lessons learned regarding IDC changes to potentially incompatible containers.	George B	9/18/14

4.0 OJT Training Objectives

The following training objectives are conducted per MP-COPS-9.34, Conduct of Operations Control of On-Shift Training. These elements are to be performed (P), simulated (S) or discussed (D) as appropriate. At the conclusion of the instructions phase, the trainee will be assessed per MP-RTQP-14.13, Performance Assessments. If the trainee cannot perform the task without coaching, terminate the Performance Assessment.

AKE Tasks	P S D	*Evaluator Signature & date*
4.1.1 Prepare an AKR using Form-1070 for submittal.	(P)	George B 9/18/14
4.1.2 Prepare the required AMWTP Forms for summarizing and submitting an AK source document for submittal.	(P)	George B 9/18/14
4.1.3 Access the WTS AK Evaluation screen.	(P)	George B 9/18/14
4.1.4 Evaluate and resolve a container historical ID.	(P)	George B 9/18/14

AMWTP Advanced Mixed Waste Treatment Project	*Advanced Mixed Waste Treatment Project* *RE- QUALIFICATION CHECKLIST* *ACCEPTABLE KNOWLEDGE EXPERT*	**QCAKE01A** **Rev 3**

Employee Name Steve Carpenter S# 04550

AKE Tasks	P S D	*Evaluator Signature & date*
4.1.5 Manage solids and debris container lots.	(P)	George Dyer 9/18/14
4.1.6 Access and navigate the TrackWise system from NCR creation to verification of NCR closure.	(P)	George Dyer 9/18/14

5.0 Emergency / Abnormal Conditions

The AKE must demonstrate adequate knowledge of each Emergency/Abnormal condition listed below through performance, simulation or discussion with an OJT Instructor, AKE Manager or SS. The scope of these items should pertain to the AKE's required duties.

Emergency / Abnormal Conditions	PS D	Evaluator signature	Date
5.1 Fire/Alarm	S D	George Dyer	9/18/14
5.2 Location of Fire Extinguishers/Fire Alarms	P	George Dyer	9/18/14
5.3 Evacuation Alarm	S D	George Dyer	9/18/14
5.4 Injured person	S D	George Dyer	9/18/14
5.5 Dropped Waste Container	S/D	George Dyer	9/18/14
5.6 Breached Waste Container	S/D	George Dyer	9/18/14
5.7 Take Cover Alarm	S/D	George Dyer	9/18/14
5.8 CAM Alarm	S/D	George Dyer	9/18/14
5.9 Spill/Contamination Release	S/D	George Dyer	9/18/14
5.10 Loss of ventilation/air	S/D	George Dyer	9/18/14
5.11 Loss of commercial power	S/D	George R	9/18/14

6.0 Examinations (Sections 1-5 must be complete prior to testing)

Written Exam: None

AMWTP Advanced Mixed Waste Treatment Project	*Advanced Mixed Waste Treatment Project* *RE- QUALIFICATION CHECKLIST* *ACCEPTABLE KNOWLEDGE EXPERT*	**QCAKE01A** **Rev 3**

Employee Name Steve Carpenter S# 104550

7.0 **Recommendation for Qualification**		
After discussion with the candidate concerning this job scope, the AKE Manager (or designee) acknowledges that the trainee is competent and recommends that the employee be granted re-qualification in this job scope.		
	George Bu	9/18/14
AKE Manager (Print Name)	Signature	Date

Upon satisfactory completion of this Re-Qualification Checklist, the TRU Programs Manager (or designee) may grant Re-Qualification to the trainee by signing on the cover page of this Re-Qualification Checklist.

APPROVED
By Amy Betzer at 10:08 am, Sep 18, 2014

DIVIDER

PAGE

AMWTP Advanced Mixed Waste Treatment Project	*Advanced Mixed Waste Treatment Project* *INITIAL QUALIFICATION CHECKLIST* *ACCEPTABLE KNOWLEDGE EXPERT*	**QCAKE01A** **Rev 3**

Employee Name Joe Velasquez S# 85253

ACCEPTABLE KNOWLEDGE EXPERT

Qualification Checklist Number: QCAKE01A

The manager granting qualification acknowledges that the employee possesses the knowledge, skills, and abilities to perform this job function correctly the first time, safely and compliantly.

Qualification granted by:	S M Peterman		10/23/12
	TRU Programs Manager (Print Name)	Signature	Date

Required Attachments: Check box if attached	Exemption Form (if used) ☐	Remedial Form (if used) ☐

Qual Checklist Issued to Trainee by :	Dave Butler		9/6/12
	Print Name	Signature	Date

Qualification Checklist Approval Section

OCT 23 2012

Line Manager Approval	James Jackson	Signature on file	2/24/11
	Print Name	Signature	Date

Training Manager Approval	Ralph Hartline	Signature on file	2/24/11
	Print Name	Signature	Date

OCT 24 AM

QCB

AMWTP Advanced Mixed Waste Treatment Project	*Advanced Mixed Waste Treatment Project* *INITIAL QUALIFICATION CHECKLIST* *ACCEPTABLE KNOWLEDGE EXPERT*	**QCAKE01A** **Rev 3**

Employee Name JOE VELASQUEZ S# 85253

Revision Record				
Revision Number	Affected Pages	Description of Revision	Management Approval	Date
0	All	Initial Issue	E. Torres	3/1/07
1	All	Complete revision/rewrite. Update Checklist from previous revision.	R. Hartline	7/20/09
2	All	Editorial changes and added requal checklist	J. Jackson	9/22/09
3	5, 6	Pg. 5: add 3.2.10 (INST-TRUW-8.13.3, TRU Program Acceptable Knowledge Process); Pg. 7: add 3.3.13 and 3.3.14 to Knowledge section (3.3).	J. Jackson	2/24/11

Mod Number	Affected Pages	**Modification Record** Description of Change	Management Approval	Date

- Applicable Manager must sign for modifications.

AMWTP Advanced Mixed Waste Treatment Project	*Advanced Mixed Waste Treatment Project* *INITIAL QUALIFICATION CHECKLIST* *ACCEPTABLE KNOWLEDGE EXPERT*	**QCAKE01A** **Rev 3**

Employee Name JOE VELASQUEZ S# 85253

Signature Roster

Personnel signing blocks in this Qualification Checklist must print their name legibly, sign and initial. Sign off by the Evaluator indicates successful performance of the task IAW MP-RTQP-14.13. Copy this sheet if necessary.

Name (Printed)	Signature	Initials
Steve Carpenter		SC
Caralea Hinkle-Daniel	Caralea Hinkle-Daniel	CHD
SM Peterman	SM Peterman	SMP
JOSEPH VELASQUEZ		

Employee Name JOE VELASQUEZ S# 85253

1.0 Scope

Completion of this qualification checklist is required for all personnel performing tasks as an Acceptable Knowledge Expert (AKE). This checklist specifies the prerequisite knowledge, training, and OJT objectives necessary to assure the candidate possesses the comprehensive knowledge and skills required for compliant task performance, and is qualified to perform these tasks.

The candidate is allowed six months from the date of receipt of the document to complete all activities. This qualification expires 24 months after the grant date. Maintaining qualification requires the individual to complete requalification prior to expiration of this qualification.

Extended absence (greater than six months) and/or performance deficiencies may result in disqualification of the individual by the AK Manager until any or all conditions are remediated.

Upon successful completion of this checklist, the candidate shall be able to independently perform duties of an AKE.

2.0 Prerequisites

Ensure the trainee has successfully completed the requirements listed below before completing this qualification checklist.

The Employee Position Description (EPD), Form-1018 has been reviewed or a new one completed to ensure the duties of this position are included and to verify the education and experience requirements have been satisfied. (MP-RTQP-14.1).

The employees Individual Training Plan (ITP), Form-1020, is current, or has been updated, to include the appropriate RCRA Profile and all courses required for personnel performing tasks in the capacity of an Acceptable Knowledge Expert (AKE).

The employee has completed all initial training *and is current* on the applicable qualifications and/or checklists identified on the ITP to support this qualification checklist.

Completion target date: 12/20/12

Employee's Production Manager

10/23/12
Date

AMWTP Advanced Mixed Waste Treatment Project	*Advanced Mixed Waste Treatment Project* *INITIAL QUALIFICATION CHECKLIST* *ACCEPTABLE KNOWLEDGE EXPERT*	**QCAKE01A** **Rev 3**

Employee Name JOE VELASQUEZ S# 85253

3.0 Initial & Continuing Training / Knowledge / Required Reading

The initial training courses identified pertain to the job function/duties and will be verified complete by the AK Manager or Training Specialist.

3.1 Training Courses :	Date Requirement was Complete	Recurring Training Frequency
None		

The Trainee will discuss the Required Reading documents with the qualified OJT Instructor, and/or AK Manager. These items will be signed off by the OJT instructor or AK Manager after the discussion.

3.2 Required Reading:	OJT Instructor / AK Manager Signature	Date
3.2.1 Federal RCRA Regulations Associated with Solid and Hazardous Waste Determinations (40 CFR 260 to 265 and 268)		10.23.12
3.2.2 WIPP Hazardous Waste Permit Waste Analysis Plan (NM4890139088)		10.23.12
3.2.3 CH-TRU Waste Content Codes (DOE-WIPP-01-3194)		10.23.12
3.2.4 Transuranic Waste Acceptance Criteria for the Waste Isolation Pilot Plant (DOE/WIPP-02-3122)		10.23.12
3.2.5 Advanced Mixed Waste Treatment Project Quality Assurance Program Plan (QAPP-01)		10.23.12
3.2.6 Certification Plan for INL Transuranic Waste (MP-TRUW-8.1)		10.23.12
3.2.7 Quality Assurance Project Plan. (MP-TRUW-8.2)		10.23.12
3.2.8 Collection, Review, and Management of Acceptable Knowledge Documentation. (MP-TRUW-8.13)		10.23.12
3.2.9 Preparation of Waste Stream Profile Forms (MP-TRUW-8.14)		10.23.12
3.2.10 TRU Program Acceptable Knowledge Process (INST-TRUW-8.13.3)		10.23.12

AMWTP Advanced Mixed Waste Treatment Project	*Advanced Mixed Waste Treatment Project* *INITIAL QUALIFICATION CHECKLIST* *ACCEPTABLE KNOWLEDGE EXPERT*	QCAKE01A Rev 3

Employee Name JOE VELASQUEZ S# 85253

The knowledge items pertain to the job function/duties and following an acceptable discussion will be signed by the qualified OJT Instructor or AK Manager.

3.3 Knowledge:	OJT Instructor / AK Manager Signature	Date
3.3.1 Applicable AK requirements IAW MP-TRU-8.2, Quality Assurance Project Plan.		10.23.12
3.3.2 Discuss the primary site-specific procedures associated with waste characterization using acceptable knowledge.		10.23.12
3.3.3 Discuss the state and federal RCRA regulations associated with solid and hazardous waste determinations.		10.23.12
3.3.4 Discuss the various types of AK source documentation collected for compilation into an auditable record.		10.23.12
3.3.5 Discuss data limitations and discrepancies that may occur in source documents and the process for resolution.		10.23.12
3.3.6 Discuss when an AK would develop an AK Resolution (AKR) vs. developing an AK Discrepancy Report (DR).		10.23.12
3.3.7 Discuss the consolidation of all historical AK information into a baseline summary document.		10.23.12
3.3.8 Discuss the process of summarizing an AK Source Document utilizing AMWTP Form-1068.		10.23.12
3.3.9 Discuss how AMWTP has developed waste streams that will be characterized using AK.		10.23.12
3.3.10 Discuss the process for designating Summary Category Groups, Waste Matrix Codes, EPA Hazardous Waste Codes and waste material parameters to a waste stream.		10.23.12
3.3.11 Discuss the preparation and main components of a Waste Stream Profile Form and the associated Characterization Information Summary Report.		10.23.12
3.3.12 Discuss how non-conformances are processed, including discrepancy resolution and reporting.		10.23.12

Employee Name JOE VELASQUEZ S# 85253

3.3 Knowledge:	OJT Instructor / AK Manager Signature	Date
3.3.13 Discuss how potentially incompatible IDC changes are managed (documented, notifications to be made, etc.)		10.23.12
3.3.14 Discuss any recent lessons learned regarding IDC changes to potentially incompatible containers.		10.23.12

4.0 OJT Training Objectives

The following training objectives are conducted per MP-COPS-9.34, Conduct of Operations Control of On-Shift Training. These elements are to be performed (P), simulated (S) or discussed (D) as appropriate. At the conclusion of the instructions phase, the trainee will be assessed per MP-RTQP-14.13, Performance Assessments. If the trainee cannot perform the task without coaching, terminate the Performance Assessment.

AKE Tasks		PSD	OJT Inst. Initials	Evaluator Signature & date
4.1.1	Prepare an AKR using Form-1070.	P	CHD	Carolea Hucklo. Daniel 10.23.12
4.1.2	Prepare the required AMWTP Forms for summarizing and submitting an AK source document.	P	CHD	Carolea Hucklo. Daniel 10.23.12
4.1.3	Access the Waste Tracking System (WTS) and locate screens used by the AKE, including the AK Evaluation (container queue) screens.	P		10.23.12
4.1.4	Evaluate and resolve container historical IDs in WTS.	P		10.23.12
4.1.5	Manage core and debris container lots.	P		10.23.12
4.1.6	Access and navigate the Track wise system from NCR creation to verification of NCR closure.	P		10.23.12

AMWTP Advanced Mixed Waste Treatment Project	*Advanced Mixed Waste Treatment Project* *INITIAL QUALIFICATION CHECKLIST* *ACCEPTABLE KNOWLEDGE EXPERT*	**QCAKE01A** **Rev 3**

Employee Name JOE VELASQUEZ S# 85253

5.0 **Emergency / Abnormal Conditions**
The AKE must demonstrate adequate knowledge of each Emergency/Abnormal condition listed below through performance, simulation or discussion with an OJT Instructor, AKE Manager or SS. The scope of these items should pertain to the AKE's required duties.

Emergency / Abnormal Conditions	PS D	Evaluator signature	Date
5.1 Fire/Alarm	(S) D	Caralea Huckle - Dave	10-23-12
5.2 Location of Fire Extinguishers/Fire Alarms	(P)	Caralea Huckle - Dave	10-23-12
5.3 Evacuation Alarm	(S) D	Caralea Huckle - Dave	10-23-12
5.4 Injured person	(S) D	Caralea Huckle - Dave	10-23-12
5.5 Dropped Waste Container	(S) D	Caralea Huckle - Dave	10-23-12
5.6 Breached Waste Container	(S) D	Caralea Huckle - Dave	10-23-12
5.7 Take Cover Alarm	(S) D	Caralea Huckle - Dave	10-23-12
5.8 CAM Alarm	(S) D	Caralea Huckle - Dave	10-23-12
5.9 Spill/Contamination Release	(S) D	Caralea Huckle - Dave	10-23-12
5.10 Loss of ventilation/air	(S) D	Caralea Huckle - Dave	10-23-12
5.11 Loss of commercial power	(S) D	Caralea Huckle - Dave	10-23-12

AMWTP Advanced Mixed Waste Treatment Project	*Advanced Mixed Waste Treatment Project* *INITIAL QUALIFICATION CHECKLIST* *ACCEPTABLE KNOWLEDGE EXPERT*	**QCAKE01A** **Rev 3**

Employee Name Joe Velasquez S# 85253

6.0 **Examinations** (Sections 1-5 must be complete prior to testing)
Written Exam: None

7.0 **Recommendation for Qualification**		
After discussion with the candidate concerning this job scope, the AKE Manager (or designee) acknowledges that the trainee is competent and recommends that the employee be granted qualification in this job scope.		
Steve Carpenter		10.23.12
AKE Manager (Print Name)	Signature	Date

Upon satisfactory completion of this Qualification Checklist, the TRU Programs Manager (or designee) may grant Qualification to the trainee by signing on the cover page of this Qualification Checklist.

DIVIDER

PAGE

AMWTP Advanced Mixed Waste Treatment Project	*Advanced Mixed Waste Treatment Project* *REQUALIFICATION CHECKLIST* *Site Project Manager Designee*	QCSPM01A Rev 1

Employee Name Cesar Rojas S# 103628

Site Project Manager Designee

Requalification Checklist Number: QCSPM01A

The manager granting qualification acknowledges that the employee possesses the knowledge, skills, and abilities to perform this job function correctly the first time, safely and compliantly.

Qualification granted by: TRU Programs Manager or Deputy Manager	George Byram Print Name	George Byram Signature	7/9/14 Date

Required Attachments: Check box if attached	Remedial Form ☐ (If used)	Exception Form ☐ (If used)

Qual Pack Issued By :	Amy Baker Print Name	Amy Baker Signature	6/19/14 Date

Qualification Checklist Approval Section

Line Manager Approval	Eric Schweinsberg Print Name	Signature on file Signature	6/16/10 Date

Training Manager Approval	Ralph Hartline Print Name	Signature on file Signature	6/16/10 Date

TRAINING DEPT.
July 7-11-14 10
JUN 09 2014
Initials: CR

AMWTP Advanced Mixed Waste Treatment Project	*Advanced Mixed Waste Treatment Project* *REQUALIFICATION CHECKLIST* *Site Project Manager Designee*	**QCSPM01A** **Rev 1**

Employee Name Cesar Rojas S# 103628

Revision History

Revision Number	Affected Pages	Description of Change	Date
0	-	Rev. 0 requal. never existed as the initial qual. was used for both initial and requalification.	n/a
1	All	First version of SPM-Designee requal; given rev. 1 designation to be in sync with the initial qualification.	6/16/10

Modification Record

Mod Letter	Affected Pages	Description of Change	Management Approval *	Date
1A	7	Add to section 4.1: SPM Lead or manager may N/A any batch types that are not applicable to the SPM-Designee's specific job scope.	E. Schweinsber	6/16/12
1b	All	Completed periodic review	S Peterman	8/20/12
1C	7	Delete references to OJT elements for HGAS and Coring batch numbers.	George B	3/28/13

* Manager signature required for modifications.

AMWTP Advanced Mixed Waste Treatment Project	*Advanced Mixed Waste Treatment Project* *REQUALIFICATION CHECKLIST* *Site Project Manager Designee*	**QCSPM01A** **Rev 1**

Employee Name Cesar Rojas S# 103628

Signature Roster
Personnel signing blocks in this qualification checklist must print their name legibly, sign and initial. Signature by Evaluators indicates they have performed evaluations IAW MP-RTQP-14.13. Copy this sheet if necessary.

Name (Printed)	Signature	Initials
Amy Betzer	Amy Betzer	AB
Dave Marquardt		DM
George Byram		TB

AMWTP Advanced Mixed Waste Treatment Project	*Advanced Mixed Waste Treatment Project* *REQUALIFICATION CHECKLIST* *Site Project Manager Designee*	**QCSPM01A** **Rev 1**

Employee Name Cesar Rojas S# 103628

1.0 Scope

This qualification checklist has been developed in order to requalifiy individuals acting as Site Project Manager Designees at AMWTP.

The employee's management will assign a target date for completion of this checklist not to exceed six months. TRU Programs Management may decide the path forward if the individual has not completed the checklist by the target date.

The individual may be disqualified for any of the following: extended absence, identified training expires, failure of recurring proficiency/performance exams, performance deficiencies, etc.

2.0 Prerequisites

Ensure the trainee has successfully completed the requirements listed below before completing this qualification checklist.

The employees Individual Training Plan (ITP), Form-1020, is current, or has been updated, to include this checklist and any other required training.

Checklist completion target date:	Employee's Manager	Date
		7/9/14

	Date Requirement Was Completed	**Signature** (Training Specialist or Waste Programs Lead)	**Date**
2.1 Completion of QCSPM01A qualification checklist	7/11/12	Amy Betts	4/19/14

AMWTP Advanced Mixed Waste Treatment Project	*Advanced Mixed Waste Treatment Project* *REQUALIFICATION CHECKLIST* *Site Project Manager Designee*	**QCSPM01A** **Rev 1**

Employee Name Cesar Rojas S# 103628

3.0 Initial & Continuing Training / Knowledge / Required Reading

The initial training courses identified pertain to the job function/duties and will be verified complete by the employee's SS or a Training Representative.

3.1 Training Courses (Indicate Courses that are Recurring):	Date Requirement was Complete	Recurring Training /Qualification Frequency
3.1.1 None	N/A	N/A

Sign-off by the OJT Instructor or SPM Designee Lead indicates that each required reading has been reviewed and that the Trainee demonstrates a satisfactory understanding of how it pertains to their job responsibilities

3.2 Required Reading: Operating Instructions	OJT Instructor / SPM Designee Lead Signature	Date
3.2.1 None	N/A	N/A

3.3 Required Reading: Other Documents	OJT Instructor / SPM Designee Lead Signature	Date
3.3.1 Discuss any recent changes to MP-TRUW-8.1, Certification Plan for INL Transuranic Waste	George Bya	7/8/14
3.3.2 Discuss any recent changes to MP-TRUW-8.2, Quality Assurance Project Plan.	George Bya	7/8/14
3.3.3 Discuss any recent changes to MP-TRUW-8.5, TRU Waste Certification.	George Bya	7/8/14
3.3.4 Discuss any recent changes to MP-TRUW-8.8, Level I Validation.	George Bya	7/8/14
3.3.5 Discuss any recent changes to MP-TRUW-8.9, Level II Validation.	George Bya	7/8/14
3.3.6 Discuss any recent changes to MP-TRUW-8.11, Data Reconciliation.	George Bya	7/8/14

AMWTP Advanced Mixed Waste Treatment Project	Advanced Mixed Waste Treatment Project REQUALIFICATION CHECKLIST Site Project Manager Designee	QCSPM01A Rev 1

Employee Name Cesar Rojas S# 103628

3.3 Required Reading: Other Documents	OJT Instructor / SPM Designee Lead Signature	Date
3.3.7 Discuss any recent changes to MP-TRUW-8.13.1, TRU Programs Site Project Office Process.	George B	7/9/14
3.3.8 Discuss any recent changes to NM 4890139088-TSDF, WIPP Hazardous Waste Facility Permit, Appendix B, Waste Analysis Plan (WAP), B1-B6	George B	7/9/14
3.3.9 Discuss any recent changes to DOE/CBFO-94-1012, Quality Assurance Program Document	George B	7/9/14
3.3.10 Discuss any recent changes to DOE/WIPP-0203122, Transuranic Waste Acceptance Criteria (WAC) for the Waste Isolation Pilot Plant (WIPP).	George B	7/9/14

Sign-off by the OJT Instructor or SS indicates that each knowledge item has been reviewed and that the Trainee demonstrates a satisfactory understanding of how it pertains to their job responsibilities

3.4 Knowledge:	OJT Instructor / SPM Designee Lead Signature	Date
3.4.1 None	N/A	N/A

AMWTP Advanced Mixed Waste Treatment Project	Advanced Mixed Waste Treatment Project REQUALIFICATION CHECKLIST Site Project Manager Designee	QCSPM01A Rev 1

Employee Name Cesar Rojo S# 103628

4.0 OJT Training Objectives

The elements below are to be performed (P), simulated (S), or discussed (D) as indicated and reviewed by the SPM Lead or Manager to verify "proficiency" of the candidate for requalification.

Sign-off by the evaluator indicates proficiency of the task(s). If proficiency cannot be determined without coaching, terminate the Performance Assessment.

	P S D	Evaluator Signature (SPM Lead or Manager) & date
Mod 1A		
4.1 Data Validation (SPM Lead or Manager may N/A any of the batch types that do not apply to the SPM Designee job scope).		
4.1.1 Through discussion, review the elements below to demonstrate a working knowledge of and the ability to perform as an SPM/SPMD.		
• RTR Batch number RTR14-00099	D	Cesar Rojo
• Radioassay batch number ASY14-01789	D	Cesar Rojo
• ~~HGAS batch number~~ N/A- mod 1C	D	
Mod 1C		
• VE batch number VEB14-00195	D	Cesar Rojo
• ~~Core Sampling batch number~~ N/A-mod 1C	D	
• ~~Core Analysis batch number~~ N/A-mod 1C	D	
• Data Reconciliation Lot number BN 510.3.0028	D	Cesar Rojo
4.1.2 Review of employee's recent performance and verification that performance continues to be satisfactory.	D	Cesar Rojo

AMWTP Advanced Mixed Waste Treatment Project	*Advanced Mixed Waste Treatment Project* *REQUALIFICATION CHECKLIST* *Site Project Manager Designee*	**QCSPM01A** **Rev 1**

Employee Name Cesar Rojas S# 103628

5.0	**Emergency / Abnormal Conditions – None required for requalification**

6.0	**Examinations – No written exam required** (not a 5480.20A position)

7.0	**Recommendation for Qualification**	
After discussion with the candidate concerning this job scope, the **SPM Designee Lead** acknowledges that the trainee possesses the knowledge, skills, and abilities to continue to perform this job function correctly, safely and compliantly. In addition, the **SPM Designee Lead** has completed the quality validation of this document in accordance with the requirements in MP-DOCS-18.2.		
SPM Designee Lead		7/9/14
Title	Signature	Date

Upon satisfactory completion of this qualification checklist, the TRU Programs Manager/Deputy Manager may grant Qualification to the trainee on the front cover of this qualification checklist.

DIVIDER

PAGE

AMWTP Advanced Mixed Waste Treatment Project	*Advanced Mixed Waste Treatment Project* *REQUALIFICATION CHECKLIST* *Site Project Manager Designee*	**QCSPM01A** **Rev 1**

Employee Name Nancy Kirk S# 102910

Site Project Manager Designee

Requalification Checklist Number: QCSPM01A

The manager granting qualification acknowledges that the employee possesses the knowledge, skills, and abilities to perform this job function correctly the first time, safely and compliantly.

Qualification granted by: TRU Programs Manager or Deputy Manager	George Byram Print Name	George B Signature	7/2/14 Date

Required Attachments: Check box if attached	Remedial Form ☐ (If used)	Exception Form ☐ (If used)

Qual Pack Issued By :	Amy Betzer Print Name	Amy Betzer Signature	6/19/14 Date

TRAINING DEPT.

Qualification Checklist Approval Section	JUL 03 2014 Initials:	

Line Manager Approval	Eric Schweinsberg Print Name	Signature on file Signature	6/16/10 Date

Training Manager Approval	Ralph Hartline Print Name	Signature on file Signature	6/16/10 Date

AMWTP Advanced Mixed Waste Treatment Project	*Advanced Mixed Waste Treatment Project* *REQUALIFICATION CHECKLIST* *Site Project Manager Designee*	**QCSPM01A** **Rev 1**

Employee Name Nancy Kirk S# 102910

Revision History

Revision Number	Affected Pages	Description of Change	Date
0	-	Rev. 0 requal. never existed as the initial qual. was used for both initial and requalification.	n/a
1	All	First version of SPM-Designee requal; given rev. 1 designation to be in sync with the initial qualification.	6/16/10

Modification Record

Mod Letter	Affected Pages	Description of Change	Management Approval *	Date
1A	7	Add to section 4.1: SPM Lead or manager may N/A any batch types that are not applicable to the SPM-Designee's specific job scope.	E. Schweinsber	6/16/12
1b	All	Completed periodic review	S Peterman	8/20/12
1C	7	Delete references to OJT elements for HGAS and Coring batch numbers.	George B	3/28/13

* Manager signature required for modifications.

AMWTP Advanced Mixed Waste Treatment Project	*Advanced Mixed Waste Treatment Project* *REQUALIFICATION CHECKLIST* *Site Project Manager Designee*	**QCSPM01A** **Rev 1**

Employee Name Nancy Kirk S# 102910

Signature Roster

Personnel signing blocks in this qualification checklist must print their name legibly, sign and initial. Signature by Evaluators indicates they have performed evaluations IAW MP-RTQP-14.13. Copy this sheet if necessary.

Name (Printed)	Signature	Initials
Amy Betzer	Amy Betzer	AB
Nancy Kirk	Nancy Kirk	NK
George Dyram	George Dyram	GD

AMWTP Advanced Mixed Waste Treatment Project	*Advanced Mixed Waste Treatment Project* *REQUALIFICATION CHECKLIST* *Site Project Manager Designee*	**QCSPM01A** **Rev 1**

Employee Name Nancy Kirk S# 102910

1.0 Scope

This qualification checklist has been developed in order to requalifiy individuals acting as Site Project Manager Designees at AMWTP.

The employee's management will assign a target date for completion of this checklist not to exceed six months. TRU Programs Management may decide the path forward if the individual has not completed the checklist by the target date.

The individual may be disqualified for any of the following: extended absence, identified training expires, failure of recurring proficiency/performance exams, performance deficiencies, etc.

2.0 Prerequisites

Ensure the trainee has successfully completed the requirements listed below before completing this qualification checklist.

The employees Individual Training Plan (ITP), Form-1020, is current, or has been updated, to include this checklist and any other required training.

Checklist completion target date:	George Byrne Employee's Manager	7/2/14 Date

	Date Requirement Was Completed	**Signature** (Training Specialist or Waste Programs Lead)	**Date**
2.1 Completion of QCSPM01A qualification checklist	7/12/12	Amy Boltz	6/19/14

AMWTP Advanced Mixed Waste Treatment Project	*Advanced Mixed Waste Treatment Project* *REQUALIFICATION CHECKLIST* *Site Project Manager Designee*	QCSPM01A Rev 1

Employee Name Nancy Kirk S# 102910

3.0 **Initial & Continuing Training / Knowledge / Required Reading**

The initial training courses identified pertain to the job function/duties and will be verified complete by the employee's SS or a Training Representative.

3.1 Training Courses (Indicate Courses that are Recurring):	Date Requirement was Complete	Recurring Training /Qualification Frequency
3.1.1 None	N/A	N/A

Sign-off by the OJT Instructor or SPM Designee Lead indicates that each required reading has been reviewed and that the Trainee demonstrates a satisfactory understanding of how it pertains to their job responsibilities

3.2 Required Reading: Operating Instructions	OJT Instructor / SPM Designee Lead Signature	Date
3.2.1 None	N/A	N/A

3.3 Required Reading: Other Documents	OJT Instructor / SPM Designee Lead Signature	Date
3.3.1 Discuss any recent changes to MP-TRUW-8.1, Certification Plan for INL Transuranic Waste	George Byrne	7/2/14
3.3.2 Discuss any recent changes to MP-TRUW-8.2, Quality Assurance Project Plan.	George Byrne	7/2/14
3.3.3 Discuss any recent changes to MP-TRUW-8.5, TRU Waste Certification.	George Byrne	7/2/14
3.3.4 Discuss any recent changes to MP-TRUW-8.8, Level I Validation.	George Byrne	7/2/14
3.3.5 Discuss any recent changes to MP-TRUW-8.9, Level II Validation.	George Byrne	7/2/14
3.3.6 Discuss any recent changes to MP-TRUW-8.11, Data Reconciliation.	George Byrne	7/2/14

Employee Name Nancy Kirk S# 102910

3.3 Required Reading: Other Documents	OJT Instructor / SPM Designee Lead Signature	Date
3.3.7 Discuss any recent changes to MP-TRUW-8.13.1, TRU Programs Site Project Office Process.	George Bu	7/2/14
3.3.8 Discuss any recent changes to NM 4890139088-TSDF, WIPP Hazardous Waste Facility Permit, Appendix B, Waste Analysis Plan (WAP), B1-B6	George Bu	7/2/14
3.3.9 Discuss any recent changes to DOE/CBFO-94-1012, Quality Assurance Program Document	George Bu	7/2/14
3.3.10 Discuss any recent changes to DOE/WIPP-0203122, Transuranic Waste Acceptance Criteria (WAC) for the Waste Isolation Pilot Plant (WIPP).	George Bu	7/2/14

Sign-off by the OJT Instructor or SS indicates that each knowledge item has been reviewed and that the Trainee demonstrates a satisfactory understanding of how it pertains to their job responsibilities

3.4 Knowledge:	OJT Instructor / SPM Designee Lead Signature	Date
3.4.1 None	N/A	N/A

AMWTP Advanced Mixed Waste Treatment Project	Advanced Mixed Waste Treatment Project REQUALIFICATION CHECKLIST Site Project Manager Designee	QCSPM01A Rev 1

Employee Name Nancy Kirk S# 102910

4.0 OJT Training Objectives

The elements below are to be performed (P), simulated (S), or discussed (D) as indicated and reviewed by the SPM Lead or Manager to verify "proficiency" of the candidate for requalification.

Sign-off by the evaluator indicates proficiency of the task(s). If proficiency cannot be determined without coaching, terminate the Performance Assessment.

Mod 1A	P S D	Evaluator Signature (SPM Lead or Manager) & date
4.1 Data Validation (SPM Lead or Manager may N/A any of the batch types that do not apply to the SPM Designee job scope).		
4.1.1 Through discussion, review the elements below to demonstrate a working knowledge of and the ability to perform as an SPM/SPMD.		
• RTR Batch number RTR 14-00142	D	George Byrne
• Radioassay batch number RSY 14-01654	D	George Byrne
• ~~HGAS batch number~~ N/A- mod 1C	D	George Byrne 7/2/14 N/A
Mod 1C		
• VE batch number VEB 14-00192	D	George Byrne
• ~~Core Sampling batch number~~ N/A-mod 1C	D	George Byrne
• ~~Core Analysis batch number~~ N/A-mod 1C	D	N/A
• Data Reconciliation Lot number BN 510.3.0025	D	George Byrne
4.1.2 Review of employee's recent performance and verification that performance continues to be satisfactory.	D	George Byrne

AMWTP Advanced Mixed Waste Treatment Project	*Advanced Mixed Waste Treatment Project* *REQUALIFICATION CHECKLIST* *Site Project Manager Designee*	**QCSPM01A** **Rev 1**

Employee Name Nancy Kirk S# 102910

5.0	**Emergency / Abnormal Conditions – None required for requalification**

6.0	**Examinations – No written exam required** (not a 5480.20A position)

7.0	**Recommendation for Qualification**	
After discussion with the candidate concerning this job scope, the **SPM Designee Lead** acknowledges that the trainee possesses the knowledge, skills, and abilities to continue to perform this job function correctly, safely and compliantly. In addition, the **SPM Designee Lead** has completed the quality validation of this document in accordance with the requirements in MP-DOCS-18.2.		
SPM Designee Lead Title	George Bu Signature	7/2/14 Date

Upon satisfactory completion of this qualification checklist, the TRU Programs Manager/Deputy Manager may grant Qualification to the trainee on the front cover of this qualification checklist.

DIVIDER

PAGE

AMWTP	Advanced Mixed Waste Treatment Project REQUALIFICATION CHECKLIST Site Project Manager Designee	QCSPM01A Rev 1

Employee Name E. Schweinsberg S# 86737

Site Project Manager Designee

Requalification Checklist Number: QCSPM01A

The manager granting qualification acknowledges that the employee possesses the knowledge, skills, and abilities to perform this job function correctly the first time, safely and compliantly.

Qualification granted by: TRU Programs Manager or Deputy Manager	Geo Byram Print Name	George Byram Signature	5/28/13 Date

Required Attachments: Check box if attached	Remedial Form ☐ (If used)	Exception Form ☐ (If used)

Qual Pack Issued By :	Dave Butler Print Name	Dave Butler Signature	4/17/13 Date

Qualification Checklist Approval Section			
Line Manager Approval	Eric Schweinsberg Print Name	Signature on file Signature	6/16/10 Date
Training Manager Approval	Ralph Hartline Print Name	Signature on file Signature	6/16/10 Date

QC 7/15/13
R

~~[illegible]~~
~~[illegible]~~
~~[illegible]~~

AMWTP Advanced Mixed Waste Treatment Project	*Advanced Mixed Waste Treatment Project* *REQUALIFICATION CHECKLIST* *Site Project Manager Designee*	QCSPM01A Rev 1

Employee Name Eric Schweinsberg S# 86737

Revision History

Revision Number	Affected Pages	Description of Change	Date
0	-	Rev. 0 requal. never existed as the initial qual. was used for both initial and requalification.	n/a
1	All	First version of SPM-Designee requal; given rev. 1 designation to be in sync with the initial qualification.	6/16/10

Modification Record

Mod Letter	Affected Pages	Description of Change	Management Approval *	Date
1A	7	Add to section 4.1: SPM Lead or manager may N/A any batch types that are not applicable to the SPM-Designee's specific job scope.	E. Schweinsber	6/16/12
1b	All	Completed periodic review	S Peterman	8/20/12
1C	7	Delete references to OJT elements for HGAS and Coring batch numbers.	Greg B	3/28/13

* Manager signature required for modifications.

AMWTP Advanced Mixed Waste Treatment Project	*Advanced Mixed Waste Treatment Project* *REQUALIFICATION CHECKLIST* *Site Project Manager Designee*	QCSPM01A Rev 1

Employee Name Eric Schweinsberg S# 86737

Signature Roster

Personnel signing blocks in this qualification checklist must print their name legibly, sign and initial. Signature by Evaluators indicates they have performed evaluations IAW MP-RTQP-14.13. Copy this sheet if necessary.

Name (Printed)	Signature	Initials
Dave Butler	Dave Butler	DB
Eric Schweinsberg	Eric Schweinsberg	ES
Sean Caniff	Sean P. Caniff	SPC
Geo Byram	George Byram	GB

AMWTP	*Advanced Mixed Waste Treatment Project* *REQUALIFICATION CHECKLIST* *Site Project Manager Designee*	QCSPM01A Rev 1

Employee Name Eric Schweinsberg S# 86737

1.0 Scope

This qualification checklist has been developed in order to requalify individuals acting as Site Project Manager Designees at AMWTP.

The employee's management will assign a target date for completion of this checklist not to exceed six months. TRU Programs Management may decide the path forward if the individual has not completed the checklist by the target date.

The individual may be disqualified for any of the following: extended absence, identified training expires, failure of recurring proficiency/performance exams, performance deficiencies, etc.

2.0 Prerequisites

Ensure the trainee has successfully completed the requirements listed below before completing this qualification checklist.

The employees Individual Training Plan (ITP), Form-1020, is current, or has been updated, to include this checklist and any other required training.

Checklist completion target date:

George Dyer
Employee's Manager

5/28/13
Date

	Date Requirement Was Completed	Signature (Training Specialist or Waste Programs Lead)	Date
2.1 Completion of QCSPM01A qualification checklist	7-26-11		4-17-13

AMWTP Advanced Mixed Waste Treatment Project	*Advanced Mixed Waste Treatment Project* *REQUALIFICATION CHECKLIST* *Site Project Manager Designee*	QCSPM01A Rev 1

Employee Name Eric Schweinsberg S# 86737

3.0 Initial & Continuing Training / Knowledge / Required Reading

The initial training courses identified pertain to the job function/duties and will be verified complete by the employee's SS or a Training Representative.

3.1 Training Courses (Indicate Courses that are Recurring):	Date Requirement was Complete	Recurring Training /Qualification Frequency
3.1.1 None	N/A	N/A

Sign-off by the OJT Instructor or SPM Designee Lead indicates that each required reading has been reviewed and that the Trainee demonstrates a satisfactory understanding of how it pertains to their job responsibilities

3.2 Required Reading: Operating Instructions	OJT Instructor / SPM Designee Lead Signature	Date
3.2.1 None	N/A	N/A

3.3 Required Reading: Other Documents	OJT Instructor / SPM Designee Lead Signature	Date
3.3.1 Discuss any recent changes to MP-TRUW-8.1, Certification Plan for INL Transuranic Waste	George Bu	5/27/13
3.3.2 Discuss any recent changes to MP-TRUW-8.2, Quality Assurance Project Plan.	George Bu	5/27/13
3.3.3 Discuss any recent changes to MP-TRUW-8.5, TRU Waste Certification.	George Bu	5/27/13
3.3.4 Discuss any recent changes to MP-TRUW-8.8, Level I Validation.	George Bu	5/27/13
3.3.5 Discuss any recent changes to MP-TRUW-8.9, Level II Validation.	George Bu	5/27/13
3.3.6 Discuss any recent changes to MP-TRUW-8.11, Data Reconciliation.	George Bu	5/27/13

AMWTP Advanced Mixed Waste Treatment Project	Advanced Mixed Waste Treatment Project REQUALIFICATION CHECKLIST Site Project Manager Designee	QCSPM01A Rev 1

Employee Name Eric Schweinsberg S# 86737

3.3 Required Reading: Other Documents	OJT Instructor / SPM Designee Lead Signature	Date
3.3.7 Discuss any recent changes to MP-TRUW-8.13.1, TRU Programs Site Project Office Process.	George B	5/27/13
3.3.8 Discuss any recent changes to NM 4890139088-TSDF, WIPP Hazardous Waste Facility Permit, Appendix B, Waste Analysis Plan (WAP), B1-B6	George B	5/27/13
3.3.9 Discuss any recent changes to DOE/CBFO-94-1012, Quality Assurance Program Document	George B	5/27/13
3.3.10 Discuss any recent changes to DOE/WIPP-0203122, Transuranic Waste Acceptance Criteria (WAC) for the Waste Isolation Pilot Plant (WIPP).	George B	5/27/13

Sign-off by the OJT Instructor or SS indicates that each knowledge item has been reviewed and that the Trainee demonstrates a satisfactory understanding of how it pertains to their job responsibilities

3.4 Knowledge:	OJT Instructor / SPM Designee Lead Signature	Date
3.4.1 None	N/A	N/A

AMWTP Advanced Mixed Waste Treatment Project	Advanced Mixed Waste Treatment Project REQUALIFICATION CHECKLIST Site Project Manager Designee	QCSPM01A Rev 1

Employee Name Eric Schweinsberg S# 86737

4.0 OJT Training Objectives

The elements below are to be performed (P), simulated (S), or discussed (D) as indicated and reviewed by the SPM Lead or Manager to verify "proficiency" of the candidate for requalification.

Sign-off by the evaluator indicates proficiency of the task(s). If proficiency cannot be determined without coaching, terminate the Performance Assessment.

Mod 1A	P S D	Evaluator Signature (SPM Lead or Manager) & date
4.1 Data Validation (SPM Lead or Manager may N/A any of the batch types that do not apply to the SPM Designee job scope).		
4.1.1 Through discussion, review the elements below to demonstrate a working knowledge of and the ability to perform as an SPM/SPMD.		
• RTR Batch number 2TR-13-00046	D	5/23/13
• Radioassay batch number ASY-13-01492	D	5/29/13
• ~~HGAS batch number~~ N/A- mod 1C	D	N/A
Mod 1C		
• VE batch number VEB13-00309	D	5/28/13
• ~~Core Sampling batch number~~ N/A-mod 1C	D	N/A
• ~~Core Analysis batch number~~ N/A-mod 1C	D	N/A
• Data Reconciliation Lot number BN5101.0227	D	5/25/13
4.1.2 Review of employee's recent performance and verification that performance continues to be satisfactory.	D	5/28/13

AMWTP Advanced Mixed Waste Treatment Project	*Advanced Mixed Waste Treatment Project* *REQUALIFICATION CHECKLIST* *Site Project Manager Designee*	QCSPM01A Rev 1

Employee Name Eric Schweinsberg S# 86737

5.0	**Emergency / Abnormal Conditions – None required for requalification**

6.0	**Examinations – No written exam required** (not a 5480.20A position)

7.0	**Recommendation for Qualification**	
After discussion with the candidate concerning this job scope, the **SPM Designee Lead** acknowledges that the trainee possesses the knowledge, skills, and abilities to continue to perform this job function correctly, safely and compliantly. In addition, the **SPM Designee Lead** has completed the quality validation of this document in accordance with the requirements in MP-DOCS-18.2.		
SPM Designee Lead Title	George Dinan Signature	5/28/13 Date

Upon satisfactory completion of this qualification checklist, the TRU Programs Manager/Deputy Manager may grant Qualification to the trainee on the front cover of this qualification checklist.

DIVIDER

PAGE

AMWTP Advanced Mixed Waste Treatment Project	*Advanced Mixed Waste Treatment Project* *REQUALIFICATION CHECKLIST* *Site Project Manager Designee*	**QCSPM01A** **Rev 1**

Employee Name Gina Tedford S# 35927

Site Project Manager Designee

Requalification Checklist Number: QCSPM01A

The manager granting qualification acknowledges that the employee possesses the knowledge, skills, and abilities to perform this job function correctly the first time, safely and compliantly.

Qualification granted by: TRU Programs Manager or Deputy Manager	George Byram Print Name	George Byram Signature 4/3/13	4/18/13 Date

Required Attachments: Check box if attached	Remedial Form ☐ (If used)	Exception Form ☐ (If used)

Qual Pack Issued By :	Dave Butler Print Name	Dave Butler Signature	2/27/13 Date

Qualification Checklist Approval Section

Line Manager Approval	Eric Schweinsberg Print Name	Signature on file Signature	6/16/10 Date
Training Manager Approval	Ralph Hartline Print Name	Signature on file Signature	6/16/10 Date

AMWTP Advanced Mixed Waste Treatment Project	*Advanced Mixed Waste Treatment Project* *REQUALIFICATION CHECKLIST* *Site Project Manager Designee*	**QCSPM01A** **Rev 1**

Employee Name Gina Tedford S# 35927

Revision History			
Revision Number	Affected Pages	Description of Change	Date
0	-	Rev. 0 requal. never existed as the initial qual. was used for both initial and requalification.	n/a
1	All	First version of SPM-Designee requal; given rev. 1 designation to be in sync with the initial qualification.	6/16/10

Modification Record				
Mod Letter	Affected Pages	Description of Change	Management Approval *	Date
1A	7	Add to section 4.1: SPM Lead or manager may N/A any batch types that are not applicable to the SPM-Designee's specific job scope.	E. Schweinsber	6/16/12
1b	All	Completed periodic review	S Peterman	8/20/12

* Manager signature required for modifications.

AMWTP Advanced Mixed Waste Treatment Project	*Advanced Mixed Waste Treatment Project* *REQUALIFICATION CHECKLIST* *Site Project Manager Designee*	**QCSPM01A** **Rev 1**

Employee Name Gina Tedford S# 35927

Signature Roster
Personnel signing blocks in this qualification checklist must print their name legibly, sign and initial. Signature by Evaluators indicates they have performed evaluations IAW MP-RTQP-14.13. Copy this sheet if necessary.

Name (Printed)	Signature	Initials
George Byram	George B	4/18/13
Kathy Merrill	Kathy Merrill	4/18/13

AMWTP Advanced Mixed Waste Treatment Project	*Advanced Mixed Waste Treatment Project* *REQUALIFICATION CHECKLIST* *Site Project Manager Designee*	**QCSPM01A** **Rev 1**

Employee Name Gina Tedford S# 35927

1.0 Scope

This qualification checklist has been developed in order to requalifiy individuals acting as Site Project Manager Designees at AMWTP.

The employee's management will assign a target date for completion of this checklist not to exceed six months. TRU Programs Management may decide the path forward if the individual has not completed the checklist by the target date.

The individual may be disqualified for any of the following: extended absence, identified training expires, failure of recurring proficiency/performance exams, performance deficiencies, etc.

2.0 Prerequisites

Ensure the trainee has successfully completed the requirements listed below before completing this qualification checklist.

The employees Individual Training Plan (ITP), Form-1020, is current, or has been updated, to include this checklist and any other required training.

Checklist completion target date:	Employee's Manager	Date
	George B	4/18/13

	Date Requirement Was Completed	**Signature** (Training Specialist or Waste Programs Lead)	**Date**
2.1 Completion of QCSPM01A qualification checklist	5-4-11	Karen Wenrich	4/18/13

AMWTP Advanced Mixed Waste Treatment Project	*Advanced Mixed Waste Treatment Project* *REQUALIFICATION CHECKLIST* *Site Project Manager Designee*	**QCSPM01A** **Rev 1**

Employee Name Gina Ledford S# 35927

3.0 Initial & Continuing Training / Knowledge / Required Reading

The initial training courses identified pertain to the job function/duties and will be verified complete by the employee's SS or a Training Representative.

3.1 Training Courses (Indicate Courses that are Recurring):	Date Requirement was Complete	Recurring Training /Qualification Frequency
3.1.1 None	N/A	N/A

Sign-off by the OJT Instructor or SPM Designee Lead indicates that each required reading has been reviewed and that the Trainee demonstrates a satisfactory understanding of how it pertains to their job responsibilities

3.2 Required Reading: Operating Instructions	OJT Instructor / SPM Designee Lead Signature	Date
3.2.1 None	N/A	N/A

3.3 Required Reading: Other Documents	OJT Instructor / SPM Designee Lead Signature	Date
3.3.1 Discuss any recent changes to MP-TRUW-8.1, Certification Plan for INL Transuranic Waste	George B	4/18/13
3.3.2 Discuss any recent changes to MP-TRUW-8.2, Quality Assurance Project Plan.	George B	4/18/13
3.3.3 Discuss any recent changes to MP-TRUW-8.5, TRU Waste Certification.	George B	4/18/13
3.3.4 Discuss any recent changes to MP-TRUW-8.8, Level I Validation.	George B	4/18/13
3.3.5 Discuss any recent changes to MP-TRUW-8.9, Level II Validation.	George B	4/18/13
3.3.6 Discuss any recent changes to MP-TRUW-8.11,	George B	4/18/13

AMWTP Advanced Mixed Waste Treatment Project	*Advanced Mixed Waste Treatment Project* *REQUALIFICATION CHECKLIST* *Site Project Manager Designee*	**QCSPM01A** **Rev 1**

Employee Name Gina K Tedford S# 35927

3.3 Required Reading: Other Documents	OJT Instructor / SPM Designee Lead Signature	Date
Data Reconciliation.		
3.3.7 Discuss any recent changes to MP-TRUW-8.13.1, TRU Programs Site Project Office Process.	George B	4/18/13
3.3.8 Discuss any recent changes to NM 4890139088-TSDF, WIPP Hazardous Waste Facility Permit, Appendix B, Waste Analysis Plan (WAP), B1-B6	George B	4/18/13
3.3.9 Discuss any recent changes to DOE/CBFO-94-1012, Quality Assurance Program Document	George B	4/18/13
3.3.10 Discuss any recent changes to DOE/WIPP-0203122, Transuranic Waste Acceptance Criteria (WAC) for the Waste Isolation Pilot Plant (WIPP).	George B	4/18/13

Sign-off by the OJT Instructor or SS indicates that each knowledge item has been reviewed and that the Trainee demonstrates a satisfactory understanding of how it pertains to their job responsibilities

3.4 Knowledge:	OJT Instructor / SPM Designee Lead Signature	Date
3.4.1 None	N/A	N/A

AMWTP Advanced Mixed Waste Treatment Project	*Advanced Mixed Waste Treatment Project* *REQUALIFICATION CHECKLIST* *Site Project Manager Designee*	QCSPM01A Rev 1

Employee Name Gina K Tedford S# 35927

4.0 OJT Training Objectives

The elements below are to be performed (P), simulated (S), or discussed (D) as indicated and reviewed by the SPM Lead or Manager to verify "proficiency" of the candidate for requalification.

Sign-off by the evaluator indicates proficiency of the task(s). If proficiency cannot be determined without coaching, terminate the Performance Assessment.

Mod 1A	P S D	Evaluator Signature (SPM Lead or Manager) & date
4.1 Data Validation (SPM Lead or Manager may N/A any of the batch types that do not apply to the SPM Designee job scope).		
4.1.1 Through discussion, review the elements below to demonstrate a working knowledge of and the ability to perform as an SPM/SPMD.		
• RTR Batch number N/A	D	N/A
• Radioassay batch number N/A	D	N/A
• HGAS batch number N/A	D	N/A
• VE batch number N/A	D	N/A
• Core Sampling batch number N/A	D	N/A
• Core Analysis batch number N/A	D	N/A
• Data Reconciliation Lot number N/A	D	N/A
4.1.2 Review of employee's recent performance and verification that performance continues to be satisfactory.	D	TB

AMWTP Advanced Mixed Waste Treatment Project	*Advanced Mixed Waste Treatment Project* *REQUALIFICATION CHECKLIST* *Site Project Manager Designee*	**QCSPM01A** **Rev 1**

Employee Name Gina K. Tedford S# 35927

5.0	**Emergency / Abnormal Conditions – None required for requalification**

6.0	**Examinations – No written exam required** (not a 5480.20A position)

7.0	**Recommendation for Qualification**

After discussion with the candidate concerning this job scope, the **SPM Designee Lead** acknowledges that the trainee possesses the knowledge, skills, and abilities to continue to perform this job function correctly, safely and compliantly.

In addition, the **SPM Designee Lead** has completed the quality validation of this document in accordance with the requirements in MP-DOCS-18.2.

SPM Designee Lead	George D	4/8/13
Title	Signature	Date

Upon satisfactory completion of this qualification checklist, the TRU Programs Manager/Deputy Manager may grant Qualification to the trainee on the front cover of this qualification checklist.

DIVIDER

PAGE

AMWTP Advanced Mixed Waste Treatment Project	*Advanced Mixed Waste Treatment Project* *REQUALIFICATION CHECKLIST* *Site Project Manager Designee*	**QCSPM01A** **Rev 1**

Employee Name Steve Carpenter S# 104550

Site Project Manager Designee

Requalification Checklist Number: QCSPM01A

The manager granting qualification acknowledges that the employee possesses the knowledge, skills, and abilities to perform this job function correctly the first time, safely and compliantly.

Qualification granted by: TRU Programs Manager or Deputy Manager	George Dyram		7/22/14
	Print Name	Signature	Date

Required Attachments: Check box if attached	Remedial Form ☐ (If used)	Exception Form ☐ (If used)

TRAINING DEPT.
JUL 22 2014
Initials: MB

Qual Pack Issued By :	Kathy Merrill	Kathy Merrill	7-1-14
	Print Name	Signature	Date

Qualification Checklist Approval Section

Line Manager Approval	Eric Schweinsberg	Signature on file	6/16/10
	Print Name	Signature	Date

Training Manager Approval	Ralph Hartline	Signature on file	6/16/10
	Print Name	Signature	Date

AMWTP Advanced Mixed Waste Treatment Project	*Advanced Mixed Waste Treatment Project* *REQUALIFICATION CHECKLIST* *Site Project Manager Designee*	**QCSPM01A** **Rev 1**

Employee Name Steve Carpenter S# 104550

Revision History

Revision Number	Affected Pages	Description of Change	Date
0	-	Rev. 0 requal. never existed as the initial qual. was used for both initial and requalification.	n/a
1	All	First version of SPM-Designee requal; given rev. 1 designation to be in sync with the initial qualification.	6/16/10

Modification Record

Mod Letter	Affected Pages	Description of Change	Management Approval *	Date
1A	7	Add to section 4.1: SPM Lead or manager may N/A any batch types that are not applicable to the SPM-Designee's specific job scope.	E. Schweinsber	6/16/12
1b	All	Completed periodic review	S Peterman	8/20/12
1C	7	Delete references to OJT elements for HGAS and Coring batch numbers.	George B	3/28/13

* Manager signature required for modifications.

AMWTP Advanced Mixed Waste Treatment Project	Advanced Mixed Waste Treatment Project REQUALIFICATION CHECKLIST Site Project Manager Designee	QCSPM01A Rev 1

Employee Name Steve Carpenter S# 104550

Signature Roster
Personnel signing blocks in this qualification checklist must print their name legibly, sign and initial. Signature by Evaluators indicates they have performed evaluations IAW MP-RTQP-14.13. Copy this sheet if necessary.

Name (Printed)	Signature	Initials
Kathy Merrill	Kathy Merrill	KM
Wes Skaar	Wes Skaar	WS
Byram, George	GBR	GB

AMWTP Advanced Mixed Waste Treatment Project	*Advanced Mixed Waste Treatment Project* *REQUALIFICATION CHECKLIST* *Site Project Manager Designee*	**QCSPM01A** **Rev 1**

Employee Name Steve Carpenter S# 104550

1.0 Scope

This qualification checklist has been developed in order to requalifiy individuals acting as Site Project Manager Designees at AMWTP.

The employee's management will assign a target date for completion of this checklist not to exceed six months. TRU Programs Management may decide the path forward if the individual has not completed the checklist by the target date.

The individual may be disqualified for any of the following: extended absence, identified training expires, failure of recurring proficiency/performance exams, performance deficiencies, etc.

2.0 Prerequisites

Ensure the trainee has successfully completed the requirements listed below before completing this qualification checklist.

The employees Individual Training Plan (ITP), Form-1020, is current, or has been updated, to include this checklist and any other required training.

Checklist completion target date:

Employee's Manager

7/22/14
Date

	Date Requirement Was Completed	**Signature** (Training Specialist or Waste Programs Lead)	**Date**
2.1 Completion of QCSPM01A qualification checklist	7-25-12	Kathy Merrill	7-1-14

Employee Name Steve Carpenter S# 104550

3.0 Initial & Continuing Training / Knowledge / Required Reading

The initial training courses identified pertain to the job function/duties and will be verified complete by the employee's SS or a Training Representative.

3.1 Training Courses (Indicate Courses that are Recurring):	Date Requirement was Complete	Recurring Training /Qualification Frequency
3.1.1 None	N/A	N/A

Sign-off by the OJT Instructor or SPM Designee Lead indicates that each required reading has been reviewed and that the Trainee demonstrates a satisfactory understanding of how it pertains to their job responsibilities

3.2 Required Reading: Operating Instructions	OJT Instructor / SPM Designee Lead Signature	Date
3.2.1 None	N/A	N/A

3.3 Required Reading: Other Documents	OJT Instructor / SPM Designee Lead Signature	Date
3.3.1 Discuss any recent changes to MP-TRUW-8.1, Certification Plan for INL Transuranic Waste	Wes Shaw	7-22-14 ~~7-12-13~~
3.3.2 Discuss any recent changes to MP-TRUW-8.2, Quality Assurance Project Plan.	Wes Shaw	7-22-14
3.3.3 Discuss any recent changes to MP-TRUW-8.5, TRU Waste Certification.	Wes Shaw	7-22-14
3.3.4 Discuss any recent changes to MP-TRUW-8.8, Level I Validation.	Wes Shaw	7-22-14
3.3.5 Discuss any recent changes to MP-TRUW-8.9, Level II Validation.	Wes Shaw	7-22-14
3.3.6 Discuss any recent changes to MP-TRUW-8.11, Data Reconciliation.	Wes Shaw	7-22-14

AMWTP Advanced Mixed Waste Treatment Project	*Advanced Mixed Waste Treatment Project* *REQUALIFICATION CHECKLIST* *Site Project Manager Designee*	**QCSPM01A** **Rev 1**

Employee Name Steve Carpenter S# 104550

3.3 Required Reading: Other Documents	OJT Instructor / SPM Designee Lead Signature	Date
3.3.7 Discuss any recent changes to MP-TRUW-8.13.1, TRU Programs Site Project Office Process.	Wes Shaw	7-22-14
3.3.8 Discuss any recent changes to NM 4890139088-TSDF, WIPP Hazardous Waste Facility Permit, Appendix B, Waste Analysis Plan (WAP), B1-B6	Wes Shaw	7-22-14
3.3.9 Discuss any recent changes to DOE/CBFO-94-1012, Quality Assurance Program Document	Wes Shaw	7-22-14
3.3.10 Discuss any recent changes to DOE/WIPP-0203122, Transuranic Waste Acceptance Criteria (WAC) for the Waste Isolation Pilot Plant (WIPP).	Wes Shaw	7-22-14

Sign-off by the OJT Instructor or SS indicates that each knowledge item has been reviewed and that the Trainee demonstrates a satisfactory understanding of how it pertains to their job responsibilities

3.4 Knowledge:	OJT Instructor / SPM Designee Lead Signature	Date
3.4.1 None	N/A	N/A

AMWTP Advanced Mixed Waste Treatment Project	Advanced Mixed Waste Treatment Project REQUALIFICATION CHECKLIST Site Project Manager Designee	QCSPM01A Rev 1

Employee Name Steve Carpenter S# 104550

4.0 OJT Training Objectives

The elements below are to be performed (P), simulated (S), or discussed (D) as indicated and reviewed by the SPM Lead or Manager to verify "proficiency" of the candidate for requalification.

Sign-off by the evaluator indicates proficiency of the task(s). If proficiency cannot be determined without coaching, terminate the Performance Assessment.

	P S D	Evaluator Signature (SPM Lead or Manager) & date
Mod 1A		
4.1 Data Validation (SPM Lead or Manager may N/A any of the batch types that do not apply to the SPM Designee job scope).		
4.1.1 Through discussion, review the elements below to demonstrate a working knowledge of and the ability to perform as an SPM/SPMD.		
• RTR Batch number N/A	D	Wes Shaw 7-17-14
• Radioassay batch number N/A	D	Wes Shaw 7-17-14
• ~~HGAS batch number~~ N/A- mod 1C	D	
Mod 1C		
• VE batch number N/A	D	Wes Shaw 7-17-14
• ~~Core Sampling batch number~~ N/A-mod 1C	D	
• ~~Core Analysis batch number~~ N/A-mod 1C	D	
• Data Reconciliation Lot number N/A	D	Wes Shaw 7-17-14
4.1.2 Review of employee's recent performance and verification that performance continues to be satisfactory.	D	Wes Shaw 7-22-14

AMWTP Advanced Mixed Waste Treatment Project	*Advanced Mixed Waste Treatment Project* *REQUALIFICATION CHECKLIST* *Site Project Manager Designee*	**QCSPM01A** **Rev 1**

Employee Name Steve Carpenter S# 104550

5.0	**Emergency / Abnormal Conditions – None required for requalification**

6.0	**Examinations – No written exam required** (not a 5480.20A position)

7.0	**Recommendation for Qualification**

After discussion with the candidate concerning this job scope, the **SPM Designee Lead** acknowledges that the trainee possesses the knowledge, skills, and abilities to continue to perform this job function correctly, safely and compliantly.

In addition, the **SPM Designee Lead** has completed the quality validation of this document in accordance with the requirements in MP-DOCS-18.2.

SPM Designee Lead	Wes Shaw	7-22-14
Title	Signature	Date

Upon satisfactory completion of this qualification checklist, the TRU Programs Manager/Deputy Manager may grant Qualification to the trainee on the front cover of this qualification checklist.

Table C6-2 Acceptable Knowledge (AK) Checklist
AMWTP Recertification Audit A-15-01
October 7-9, 2014

(This page intentionally blank)

Acceptable Knowledge (AK) Checklist[1]

	WAP Requirement[2] AMWTP Audit A-15-01 Table C6-2 Acceptable Knowledge (AK) Checklist[1]	Procedure Documented		Example of Implementation/ Objective Evidence, as applicable		Comment (e.g., any change in procedure since last audit, etc.)
		Location	Adequate? Y/N (Why)	Item Reviewed	Adequate? Y/N	
	GENERAL REQUIREMENTS					
134	Are the primary document(s) required in Permit Attachment C4 containing acceptable knowledge information available? (Section C4-2)	MP-TRUW-8.13 S. 3.3, 3.4 & 3.5 MP-TRUW-8.14 S. 3.1-3.3	Y	AK Summary for Supercompacted Debris Waste (BN510.3), RPT-TRUW-83, Rev. 8 **(AK-1)** AK Summary for Special Setups Waste (BN004), RPT-TRUW-59, Rev. 4 **(AK-2)** AK Document for AMWTP Waste, RPT-TRUW-06, Rev. 16 **(AK-5)** AK Document for INL Stored TRU Waste-Rocky Flats Plant, RPT-TRUW-56, Rev. 6 **(AK-6)** Waste Stream Profile Form and attachments for waste stream BN510.3 **(AK-3)** Waste Stream Profile Form and attachments for waste stream BN004 **(AK-4)**	Y	During the week of October 6, 2014, CTAC AK auditors participated in the AMWTP recertification audit for S3000 and S5000 CH TRU Mixed Waste. The AK record for the supercompacted debris waste stream BN510.3 was reviewed, along with the solids stream BN004, originally packaged in Bldg. 774 at Rocky Flats. BN510.3 is the fourth supercompacted waste stream designated as a result of additional HWNs assigned based on new feed stock
135	Has the generator developed a methodology whereby a logical sequence of acceptable knowledge information that progresses from general facility to more detailed waste-specific information can be acquired? (Section C4-2)	MP-TRUW-8.13 S. 3.1 & 3.2	Y	AK Summary for Supercompacted Debris Waste (BN510.3), RPT-TRUW-83, Rev. 8 **(AK-1)** AK Summary for Special Setups Waste (BN004) RPT-TRUW-59, Rev.4 **(AK-2)**	Y	

	WAP Requirement[2] AMWTP Audit A-15-01 Table C6-2 Acceptable Knowledge (AK) Checklist[1]	Procedure Documented		Example of Implementation/ Objective Evidence, as applicable		Comment (e.g., any change in procedure since last audit, etc.)
		Location	Adequate? Y/N (Why)	Item Reviewed	Adequate? Y/N	
				AK Document for AMWTP Waste, RPT-TRUW-06, Rev. 16 **(AK-5)** AK Document for INL Stored TRU Waste-Rocky Flats Plant, RPT-TRUW-56, Rev. 6 **(AK-6)** AK Source Document Summaries for waste stream BN510.3 **(AK-7)** AK Source Document Summaries for waste stream BN004 **(AK-8)**		
136	Does the site have adequate procedures in place to ensure that the Acceptable Knowledge process is adequately implemented? Do these procedures facilitate the mandatory traceability analysis performed for each Summary Waste Category Group examined during the audit? (Section C4-2)	MP-TRUW-8.13 S. 3.2, 3.5 & 3.8 MP-TRUW-8.14 S. 3.1	Y	AK Summary for Supercompacted Debris Waste (BN510.3), RPT-TRUW-83, Rev. 8 **(AK-1)** AK Summary for Special Setups Waste (BN004) RPT-TRUW-59, Rev. 4 **(AK-2)** AK Document for AMWTP Waste, RPT-TRUW-06, Rev. 16 **(AK-5)** AK Document for INL Stored TRU Waste-Rocky Flats Plant, RPT-TRUW-56, Rev. 6 **(AK-6)** Waste Stream Profile Form and attachments for waste stream BN510.3 **(AK-3)** Waste Stream Profile Form and attachments for waste stream BN004 **(AK-4)**	Y	The WAP-required traceability exercise was conducted with five containers from the two waste streams including: BN510.3 BN10517120 BN10515534 BN004 10207672 10001226 10515534

	WAP Requirement[2] AMWTP Audit A-15-01 Table C6-2 Acceptable Knowledge (AK) Checklist[1]	Procedure Documented		Example of Implementation/ Objective Evidence, as applicable		Comment (e.g., any change in procedure since last audit, etc.)
		Location	Adequate? Y/N (Why)	Item Reviewed	Adequate? Y/N	
				AK Source Document Summaries for waste stream BN510.3 **(AK-7)** AK Source Document Summaries for waste stream BN004 **(AK-8)** **Traceability BDRs** <u>RTR:</u> RTR14-00005 **(AK-23)** RTR14-00006 **(AK-24)** RTR14-00067 **(AK-25)** RTR13-00213 **(AK-26)** RTR13-00275 **(AK-27)** RTR03-00066 **(AK-28)** <u>VE:</u> VEB14-00098 **(AK-29)** VEB14-00099 **(AK-30)** VEB14-00100 **(AK-31)** Data Reconciliation reports for waste streams BN510.3 and BN004 **(AK-32)** WTS Database Container Inventory and screen shots **(AK-9)**		
<u>137</u>	Does the generator site's TRU mixed waste management program information clearly define (or provide a methodology for defining) waste categorization schemes and terminology, provide a breakdown of the types and quantities of TRU mixed waste generated/stored at the site, and describe how waste is tracked and managed at the generator site (including historical and current operations? Do procedures ensure that waste streams are adequately identified? (Section C4-2a)	MP-TRUW-8.13 S. 3.3, 3.4.3, 3.5.1.4 (and Note above) & 3.5.1.8	Y	AMWTP Waste Stream Designations RPT-TRUW-12, Rev. 24 **(AK-10)** WTS Database Container Inventory and screen shots **(AK-9)**	Y	

	WAP Requirement[2] AMWTP Audit A-15-01 Table C6-2 Acceptable Knowledge (AK) Checklist[1]	Procedure Documented		Example of Implementation/ Objective Evidence, as applicable		Comment (e.g., any change in procedure since last audit, etc.)
		Location	Adequate? Y/N (Why)	Item Reviewed	Adequate? Y/N	
138	Does site documentation procedures indicate that the site will document, justify, and consistently define waste streams and assign EPA hazardous waste numbers? (Section C4-2b)	MP-TRUW-8.13 S. 3.5.2	Y	AK Summary for Supercompacted Debris Waste (BN510.3), RPT-TRUW-83, Rev. 8, S. 1.7, Table 3 **(AK-1)** AK Summary for Special Setups Waste (BN004) RPT-TRUW-59, Rev. 4, S. 1.6 **(AK-2)** AMWTP Waste Stream Designations RPT-TRUW-12, Rev. 24, Appendix A **(AK-10)**	Y	

	WAP Requirement[2] AMWTP Audit A-15-01 Table C6-2 Acceptable Knowledge (AK) Checklist[1]	Procedure Documented		Example of Implementation/ Objective Evidence, as applicable		Comment (e.g., any change in procedure since last audit, etc.)
		Location	Adequate? Y/N (Why)	Item Reviewed	Adequate? Y/N	
	REQUIRED AND ADDITIONAL INFORMATION					
140	Does the generator site document that the following must be included in the acceptable knowledge record: • Map of the site with the areas and facilities involved in TRU waste generation, treatment, and storage identified • Facility mission description as related to TRU waste generation and management (e.g., nuclear weapons research may involve metallurgy, radiochemistry, and nuclear physics operations that result in specific waste streams) • Description of the operations that generate TRU waste at the site (e.g., plutonium recovery, weapons design, or weapons fabrication) • Waste identification or categorization schemes used at the facility (e.g., item description codes, content codes) • Types and quantities of TRU mixed waste generated, including historical generation through future projections • Correlation of waste streams generated from the same building and process, as appropriate (e.g., sludge, combustibles, metals, and glass) • Waste certification procedures for retrievably stored and newly generated wastes to be sent to the WIPP facility (Section C4-2a)	MP-TRUW-8.13 S. 3.2.3, (Note above)	Y	Bullet 1: RPT-TRUW-06, Rev. 16, S. 3.1, Figures 1 & 2 **(AK-5)** RPT-TRUW-56, Rev. 6, S. 3.1, Figure 3-1 **(AK-6)** Bullet 2: RPT-TRUW-06, Rev. 16, S. 3.2 & 3.3 **(AK-5)** RPT-TRUW-56, Rev. 6, S. 3.1 **(AK-6)** Bullet 3: RPT-TRUW-06, Rev. 16, S. 3.6 **(AK-5)** RPT-TRUW-56, Rev. 6, S. 3.2 **(AK-6)** Bullet 4: RPT-TRUW-06, Rev. 16, S. 3.5.1 **(AK-5)** AMWTP Waste Stream Designations RPT-TRUW-12, Rev. 24 **(AK-10)** RPT-TRUW-56, Rev. 6, S. 3.3 **(AK-6)** Bullet 5: RPT-TRUW-83, Rev. 8, S. 1.2.3 **(AK-1)** RPT-TRUW-56, Rev. 6, S. 3.5 (**AK-6)** RPT-TRUW-59, Rev. 4, S. 1.2.3 **(AK-2)**	Y	

	WAP Requirement[2] AMWTP Audit A-15-01 Table C6-2 Acceptable Knowledge (AK) Checklist[1]	Procedure Documented		Example of Implementation/ Objective Evidence, as applicable		Comment (e.g., any change in procedure since last audit, etc.)
		Location	Adequate? Y/N (Why)	Item Reviewed	Adequate? Y/N	
				WTS database screen shots for traceability drums **(AK-9)** Bullet 6: RPT-TRUW-06, Rev. 14, S. 3.10 **(AK-5)** AMWTP Waste Stream Designations RPT-TRUW-12, Rev. 24 **(AK-10)** Bullet 7: RPT-TRUW-06, Rev. 14, S. 3.8 **(AK-5)** RPT-TRUW-56, Rev. 6, S. 3.4 (**AK-6)**		
141	Does the generator site document that the following shall be collected for each waste stream: A. Area(s) and/or building(s) from which the waste stream was or is generated B. Waste stream volume and time period of generation (e.g., 100 standard waste boxes of retrievable stored waste generated from June 1977 through December 1977) C. Waste generating process described for each building (e.g., batch waste stream generated during decommissioning operations of glove boxes), including processes associated with U134 waste generation, if applicable D. Documentation demonstrating how the site has historically managed the waste, including the historical regulatory status of the waste (i.e., TRU mixed versus TRU non-mined waste) E. Process flow diagrams (e.g., a diagram illustrating glove boxes from a specific building to a size reduction facility to a container storage area). In the case of research/development, analytical laboratory waste, or the similar processes where process flow diagrams cannot be created, a description of the waste generating processes, rather than a formal process flow diagram, may be included if this modification is justified and the justification is placed in the auditable record F. Material inputs or other information that identifies the chemical content of the waste stream and the physical waste form (e.g., glove box materials	MP-TRUW-8.13 S. 3.2.4, (Note above)	Y	RPT-TRUW-83, Rev. 8 **(AK-1)** RPT-TRUW-59, Rev. 4 **(AK-2)** A. S. 1.2.2 **(AK-1)** S. 1.2.2 **(AK-2)** B. S. 1.2.3, 1.2.4 **(AK-1)** S. 1.2.3, 1.2.4 **(AK-2)** C. S. 1.4 **(AK-1)** S. 1.4 **(AK-2)** D. RPT-TRUW-56, Rev. 6, S. 22 (**AK-6)** AMWTP Waste Stream Designations RPT-TRUW-12, Rev. 24**,** Appendix A **(AK-10)** E. Figure 1 **(AK-1)** S. 1.4.2 **(AK-2)**	Y	

	WAP Requirement[2] AMWTP Audit A-15-01 Table C6-2 Acceptable Knowledge (AK) Checklist[1]	Procedure Documented		Example of Implementation/ Objective Evidence, as applicable		Comment (e.g., any change in procedure since last audit, etc.)
		Location	Adequate? Y/N (Why)	Item Reviewed	Adequate? Y/N	
	and chemical handled during glove box operations, events or processes that may have modified the chemical or physical properties of the waste stream after generation, data obtained through visual examination of newly generated waste that later undergoes radiography; information demonstrating neutralization of U134 [hydrofluoric acid] and waste compatibility. (Section C4-2b)			AK Source Document Summaries for waste stream BN004, P077A **(AK-8)** F. S. 1.4.4 **(AK-1)** S. 1.4.4 **(AK-2)**		
142	Do site documents/procedures require that the facility will provide a summary to the Permittees that summarizes all information collected, including basis and rationale for all waste stream designations? Is an example of this summary available for audit review? If discrepant hazardous waste data exist in required information, do sites consider applying all hazardous waste numbers, but assess and evaluate the information to determine the appropriate hazardous waste number consistent with RCRA requirements? (Section C4-2b)	MP-TRUW-8.13 S. 3.5 & 3.7	Y	AK Summary for Supercompacted Debris Waste (BN510.3), RPT-TRUW-83, Rev. 8 **(AK-1)** AK Summary for Special Setups Waste (BN004) RPT-TRUW-59, Rev. 4 **(AK-2)** AK Discrepancy Resolutions in the AK record (**AK-11)**	Y	
143	Do site procedures indicate that if the required AK information is not available for a particular waste stream, that the waste stream will not be eligible for an AK Sufficiency Determination? (Section C4-2)	MP-TRUW- 8.13 S. 3.6	Y	AK Forms 1066 TRU Waste Management AK Checklist and 1067 TRU Waste Stream AK Documentation Checklist for waste streams BN510.3 and BN004 **(AK-13)**	Y	

	WAP Requirement[2] AMWTP Audit A-15-01 Table C6-2 Acceptable Knowledge (AK) Checklist[1]	Procedure Documented		Example of Implementation/ Objective Evidence, as applicable		Comment (e.g., any change in procedure since last audit, etc.)
		Location	Adequate? Y/N (Why)	Item Reviewed	Adequate? Y/N	
144	Have the following procedures been prepared?: A. Procedures for identifying and assigning the physical waste form of the waste B. Procedures for delineating waste streams and assigning Waste Matrix Codes C. Procedures for resolving inconsistencies in acceptable knowledge documentation D. Procedures for visual examination and/or radiography, if applicable E. For newly generated waste, procedures describing process controls used to ensure prohibited items (specified in the WAP, Permit Attachment C) are documented and managed F. Procedures to ensure radiography and visual examination include a list of prohibited items that the operator shall verify are not present in each container (e.g. liquid exceeding TSDF-WAC limits, corrosives, ignitables, reactives, and incompatible wastes) G. Procedures to document how changes to Waste Matrix Codes, waste stream assignment, and associated Environmental Protection Agency hazardous waste numbers based on material composition are documented for any waste H. Procedures that ensure the assignment of EPA hazardous waste numbers is appropriate, consistent with RCRA requirements, and adequately considers site historical waste management I. Procedures for estimating waste material parameter weights (Section C4-2b)	A. MP-TRUW-8.13, Appendix B, I. [C, K, & L] B. MP-TRUW-8.13, S. 3.4.1, 3.3.5, & 3.5.1.3 C. MP-TRUW-8.13, S. 3.7, Appendix E D. INST-OI-12 (All) INST-FOI-17 (All) INST-OI-34 (All) E. MP-TRUW-8.13, S. 3.3.7 & 3.5.6 INST-OI-12 (All) INST-FOI-17 (All) INST-OI-34 (All) F. INST-OI-12 (All) INST-FOI-17 (All) INST-OI-34 (All) G. MP-TRUW 8.13, S. 3.7	Y	A. RPT-TRUW-83, Rev. 8, S. 1.4.4, 1.4.5, Tables 1 & 2 **(AK-1)** RPT-TRUW-59, Rev. 4, S. 1.4.4, 1.4.5, Tables 1-1, 1-2 & 1-3 **(AK-2)** B. RPT-TRUW-83, Rev. 8, S. 1.2.9 **(AK-1)** RPT-TRUW-59, Rev. 4, S. 1.2.9 **(AK-2)** C. AK Discrepancy Resolutions in the AK record **(AK-11)** D. RTR BDRs: RTR13-00241 RTR13-00280 RTR13-00324 RTR14-00018 RTR14-00037 RTR14-00233 **(RTR-1)** VE BDRs: VNC13-00170 VEB13-00518 VNC14-00022 VEB14-00026 VEB14-00054 VEB14-00079 VEB14-00117 VEB14-00146 VEB14-00180 VEB14-00212 VEB14-00254 **(VE-1)** E. VEB14-00098 **(AK-29)** VEB14-00099 **(AK-30)** VEB14-00100 **(AK-31)**	Y	

	WAP Requirement[2] AMWTP Audit A-15-01 Table C6-2 Acceptable Knowledge (AK) Checklist[1]	Procedure Documented		Example of Implementation/ Objective Evidence, as applicable		Comment (e.g., any change in procedure since last audit, etc.)
		Location	Adequate? Y/N (Why)	Item Reviewed	Adequate? Y/N	
		H. MP-TRUW-8.13, S. 3.5.2 I. MP-TRUW-8.13, S. 3.5.1.6 (and Note above), Appendix B, I.M		RTR BDRs: RTR13-00241 RTR13-00280 RTR13-00324 RTR14-00018 RTR14-00037 RTR14-00233 **(RTR-1)** VE BDRs: VNC13-00170 VEB13-00518 VNC14-00022 VEB14-00026 VEB14-00054 VEB14-00079 VEB14-00117 VEB14-00146 VEB14-00180 VEB14-00212 VEB14-00254 **(VE-1)** F. RTR BDRs: RTR13-00241 RTR13-00280 RTR13-00324 RTR14-00018 RTR14-00037 RTR14-00233 **(RTR-1)** VE BDRs: VNC13-00170 VEB13-00518 VNC14-00022 VEB14-00026 VEB14-00054 VEB14-00079 VEB14-00117 VEB14-00146 VEB14-00180 VEB14-00212 VEB14-00254 **(VE-1)**		

	WAP Requirement[2] AMWTP Audit A-15-01 Table C6-2 Acceptable Knowledge (AK) Checklist[1]	Procedure Documented		Example of Implementation/ Objective Evidence, as applicable		Comment (e.g., any change in procedure since last audit, etc.)
		Location	Adequate? Y/N (Why)	Item Reviewed	Adequate? Y/N	
				G. AK Discrepancy Resolutions in the AK record (**AK-11)** AK Discrepancy Resolutions from Characterization and AK Reevaluations **(AK-12)** H. AK Summary for Supercompacted Debris Waste (BN510.3), RPT-TRUW-83, Rev. 8, S. 1.7, Table 3 **(AK-1)** AK Summary for Special Setups Waste (BN004) RPT-TRUW-59, Rev. 4, S. 1.6 **(AK-2)** AMWTP Waste Stream Designations RPT-TRUW-12, Rev. 24, Appendix A **(AK-10)** I. AK Summary for Supercompacted Debris Waste (BN510.3), RPT-TRUW-83, Rev. 8, S. 1.4.5.1, Table 2 **(AK-1)** AK Summary for Special Setups Waste (BN004) RPT-TRUW-59, Rev. 4, S. 1.4.5, Table 1-3 **(AK-2)** Memos supporting waste material parameter evaluation for waste streams BN510.3 and BN004 **(AK-15)**		

	WAP Requirement[2] AMWTP Audit A-15-01 Table C6-2 Acceptable Knowledge (AK) Checklist[1]	Procedure Documented		Example of Implementation/ Objective Evidence, as applicable		Comment (e.g., any change in procedure since last audit, etc.)
		Location	Adequate? Y/N (Why)	Item Reviewed	Adequate? Y/N	
145	Does the generator provide procedures or written commitment to collect additional acceptable knowledge information, as available and as necessary to augment mandatory information? (Section C4-2c)	MP-TRUW-8.13 S. 3.2.5	Y	AK Forms 1066 TRU Waste Management AK Checklist and 1067 TRU Waste Stream AK Documentation Checklist for waste streams BN510.3 and BN004 **(AK-13)**	Y	
146	Does the generator site document that all additional specific, relevant information used in the acceptable knowledge process will be identified and its use explained? Is all necessary information assembled and has it been appropriately used? (Section C4-2c)	MP-TRUW-8.13 S. 3.2.5	Y	AK Forms 1066 TRU Waste Management AK Checklist and 1067 TRU Waste Stream AK Documentation Checklist for waste streams BN510.3 and BN004 **(AK-13)**	Y	
147	Does the generator site discrepancy analysis documentation (for acceptable knowledge additional and required documentation) indicate that if discrepancies are detected, the site may consider applying all hazardous waste numbers indicated in the required and additional information, but must assess and evaluate the information to determine the appropriate hazardous waste numbers consistent with RCRA requirements? (Section C4-2c)	MP-TRUW-8.13 S. 3.7 & Appendix E	Y	AK Discrepancy Resolutions in the AK record **(AK-11)**	Y	
	TRAINING					
148	Does the generator site have procedures to ensure that all personnel involved with acceptable knowledge waste characterization have the following training, and is this training documented? A. WIPP WAP in Permit Attachment C and the TSDF-WAC specified in this permit B. State and Federal RCRA regulations associated with solid and hazardous waste characterization C. Discrepancy resolution and reporting D. Site-specific procedures associated with waste characterization using acceptable knowledge (Section C4-3a)	MP-RTQP-14.4 (All)	Y	Training/Qualification records for Acceptable Knowledge and site project management personnel performing characterization-related activities **(GEN-11)**	Y	

	WAP Requirement[2] AMWTP Audit A-15-01 Table C6-2 Acceptable Knowledge (AK) Checklist[1]	Procedure Documented		Example of Implementation/ Objective Evidence, as applicable		Comment (e.g., any change in procedure since last audit, etc.)
		Location	Adequate? Y/N (Why)	Item Reviewed	Adequate? Y/N	
	PROCEDURES					
149	Has the generator site developed the following procedures, and are these procedures technically sufficient? A. Sites must prepare and implement a written procedure outlining the specific methodology used to assemble acceptable knowledge records, including the origin of the documentation, how it will be used, and any limitations associated with the information (e.g., identify the purpose and scope of a study that included limited sampling and analysis data). B. Sites must develop and implement a written procedure to compile the required acceptable knowledge record. C. Sites must develop and implement a written procedure that ensures unacceptable wastes (e.g., reactive, ignitable, corrosive) are identified and segregated from TRU mixed waste populations sent to WIPP. D. Sites must prepare and implement a written procedure to evaluate acceptable knowledge and resolve discrepancies. For example, if different sources of information indicate different hazardous wastes are present, then sites must include all sources of information in its records and may choose to either conservatively assign hazardous waste numbers, or assign only those numbers deemed appropriate and consistent with RCRA requirements. All information used to justify assignment of hazardous waste numbers must be placed in the auditable record. Further, the assignment of hazardous waste numbers shall be tracked in the auditable record to all required documentation.	A. MP-TRUW-8.13, S. 3.2 B. MP-TRUW-8.13, S. 3.2 C. MP-TRUW-8.13, S. 3.3.7 & 3.5.6 INST-FOI-17 (All) MP-Q&SI-5.4 (All) D. MP-TRUW-8.13, S. 3.7 & Appendix E	Y	A. AK Summary for Supercompacted Debris Waste (BN510.3), RPT-TRUW-83, Rev. 8 **(AK-1)** AK Summary for Special Setups Waste (BN004) RPT-TRUW-59, Rev. 4 **(AK-2)** AK Document for AMWTP Waste, RPT-TRUW-06, Rev. 16 **(AK-5)** AK Document for INL Stored TRU Waste-Rocky Flats Plant, RPT-TRUW-56, Rev. 6 **(AK-6)** AK Source Document Summaries for waste stream BN510.3 **(AK-7)** AK Source Document Summaries for waste stream BN004 **(AK-8)** B. AK Summary for Supercompacted Debris Waste (BN510.3), RPT-TRUW-83, Rev. 8 **(AK-1)** AK Summary for Special Setups Waste (BN004) RPT-TRUW-59, Rev. 4 **(AK-2)** AK Document for AMWTP Waste, RPT-TRUW-06, Rev. 16 **(AK-5)**	Y	

	WAP Requirement[2] AMWTP Audit A-15-01 Table C6-2 Acceptable Knowledge (AK) Checklist[1]	Procedure Documented		Example of Implementation/ Objective Evidence, as applicable		Comment (e.g., any change in procedure since last audit, etc.)
		Location	Adequate? Y/N (Why)	Item Reviewed	Adequate? Y/N	
				AK Document for INL Stored TRU Waste-Rocky Flats Plant, RPT-TRUW-56, Rev. 6 **(AK-6)** C. NCRs for prohibited items **(AK-16)** "Hold" Tag **(AK-17)** VEB14-00098 **(AK-29)** VEB14-00099 **(AK-30)** VEB14-00100 **(AK-31)** Database Electronic Hold on Container **(AK-18)** D. AK Discrepancy Resolutions in the AK record (**AK-11)**		
149a	E. Sites must prepare and implement a written procedure to identify hazardous wastes and assign the appropriate hazardous waste numbers to each waste stream. The following are minimum baseline requirements/standards that site-specific procedures must include to ensure comparable and consistent characterization of hazardous waste: 1. Compile all of the required information in an auditable record. 2. Review the compiled information and delineate waste streams. Delineation of waste streams must comply with the WAP definition in Permit Attachment C, Section C-0a, and justify combining waste historically managed separately as TRU mixed and TRU non-mixed waste streams into a single waste stream. 3. Review the compiled information to determine if the waste stream is compliant with the TSDF-WAC 4. Review the required information to determine if the waste is listed under 20.4.1.200 NMAC (incorporating 40 CFR 261), Subpart D. Assign all listed hazardous waste numbers, unless the site chooses to justify an alternative assignment and document the justification in the auditable record. 5. Review the required information to determine if the waste exhibits a hazardous characteristic or may contain hazardous constituents included in the toxicity characteristics specified in 20.4.1.200 NMAC (incorporating 40 CFR 261, Subpart C. If a toxicity characteristic contaminant is identified and is not included as a listed waste, sites may evaluate available data and assign the toxicity characteristic	1. MP-TRUW-8.13, S. 3.2.4 & 3.2.5, 3.2 Note 1 2. MP-TRUW-8.13, S. 3.3.5 (Note above) 3. MP-TRUW-8.13, S. 3.3.7, 3.5.6, & 3.5.3 INST-FOI-17 (All) 4 & 5. MP-TRUW- 8.13, S. 3.5.2 6: MP-TRUW-8.13, S. 3.5.1.6 Appendix B I.M	Y	1. AK Summary for Supercompacted Debris Waste (BN510.3), RPT-TRUW-83, Rev. 8 **(AK-1)** AK Summary for Special Setups Waste (BN004) RPT-TRUW-59, Rev. 4 **(AK-2)** AK Document for AMWTP Waste, RPT-TRUW-06, Rev. 16 **(AK-5)** AK Document for INL Stored TRU Waste-Rocky Flats Plant, RPT-TRUW-56, Rev. 6 **(AK-6)** AK Forms 1066 TRU Waste Management AK Checklist and 1067 TRU Waste Stream AK Documentation Checklist for waste streams BN510.3 and BN004 **(AK-13)**	Y	

	WAP Requirement[2] AMWTP Audit A-15-01 Table C6-2 Acceptable Knowledge (AK) Checklist[1]	Procedure Documented		Example of Implementation/ Objective Evidence, as applicable		Comment (e.g., any change in procedure since last audit, etc.)
		Location	Adequate? Y/N (Why)	Item Reviewed	Adequate? Y/N	
	hazardous waste number consistent with RCRA requirements. All data examined to reach the hazardous waste number determination must be placed in the auditable record and must present a clear justification for the hazardous waste number analyses. 6. Review the compiled information to provide an estimate of the material parameter weights for each container to be stored or disposed of at WIPP. For newly generated waste, procedures shall be developed and implemented to characterize hazardous waste using acceptable knowledge prior to packaging.			2. AK Summary for Supercompacted Debris Waste (BN510.3), RPT-TRUW-83, Rev. 8, S. 1.2 **(AK-1)** AK Summary for Special Setups Waste (BN004) RPT-TRUW-59, Rev. 4, S. 1.2 **(AK-2)** 3. AK Summary for Supercompacted Debris Waste (BN510.3), RPT-TRUW-83, Rev. 8, S. 1.6 1.7.2.2, 1.7.2.3, 1.7.2.4 & 1.7.2.5.3 **(AK-1)** AK Summary for Special Setups Waste (BN004) RPT-TRUW-59, Rev. 4, S. 1.5, 1.6.2.1.1, 1.6.2.1.2, 1.6.2.1.3 & 1.6.2.3 **(AK-2)** NCRs for prohibited items **(AK-16)** Waste Matrix Code Reference Manual, RPT-TRUW-05, Rev. 36 **(AK-14)** VEB14-00098 **(AK-29)** VEB14-00099 **(AK-30)** VEB14-00100 **(AK-31)** 4 & 5. AK Summary for Supercompacted Debris Waste (BN510.3), RPT-TRUW-83, Rev. 8, S. 1.7, Table 3 **(AK-1)** AK Summary for Special Setups Waste (BN004) RPT-TRUW-59, Rev. 4, S. 1.6 **(AK-2)**		

	WAP Requirement[2] AMWTP Audit A-15-01 Table C6-2 Acceptable Knowledge (AK) Checklist[1]	Procedure Documented		Example of Implementation/ Objective Evidence, as applicable		Comment (e.g., any change in procedure since last audit, etc.)
		Location	Adequate? Y/N (Why)	Item Reviewed	Adequate? Y/N	
				AMWTP Waste Stream Designations RPT-TRUW-12, Rev. 24, Appendix A **(AK-10)** 6. AK Summary for Supercompacted Debris Waste (BN510.3), RPT-TRUW-83, Rev. 8, S. 1.4.5.1, Table 2 **(AK-1)** AK Summary for Special Setups Waste (BN004) RPT-TRUW-59, Rev. 4, S. 1.4.5, Table 1-3 **(AK-2)** Memos supporting waste material parameter evaluation for waste streams BN510.3 and BN004 **(AK-15)**		
149b	F. Sites shall ensure that results of audits of the TRU mixed waste characterization programs at the site are available in the records. G. Sites shall identify all process controls (implemented to ensure that the waste contains no prohibited items and to control hazardous waste content and/or physical form) that have been applied to retrievably stored waste and/or may presently be applied to newly generated waste. Process controls are applied at the time of waste generation/packaging to control waste content, whereas any activities performed after waste generation/packaging to identify prohibited items, hazardous waste content, or physical form are waste characterization activities, not process controls. The AK record must contain specific process control and supporting documentation identifying when these process controls are used to control waste content. See Permit Attachment C, Section C-2 for programmatic requirements related to process controls. (Section C4-3b)	F. MP-M&IA-17.2, S. 6.0 G. MP-TRUW-8.13, S. 3.5.6, Appendix B, S. I, Items I through M INST-FOI-17 (All)	Y	F. AMWTP Surveillance Report No. 74798 and Independent Assessment No. IA-14-002 **(AK-20)** G. AK Source Document Summaries for waste stream BN004, P070A, P077A **(AK-8)** VEB14-00098 **(AK-29)** VEB14-00099 **(AK-30)** VEB14-00100 **(AK-31)**	Y	

	WAP Requirement[2] AMWTP Audit A-15-01 Table C6-2 Acceptable Knowledge (AK) Checklist[1]	Procedure Documented		Example of Implementation/ Objective Evidence, as applicable		Comment (e.g., any change in procedure since last audit, etc.)
		Location	Adequate? Y/N (Why)	Item Reviewed	Adequate? Y/N	
150	Does the site have implemented procedures which comply with the following criteria to establish acceptable knowledge records: A. Acceptable knowledge information shall be compiled in an auditable record, including a road map for all applicable information. B. The overview of the facility and TRU mixed waste management operations in the context of the facility's mission shall be correlated to specific waste stream information. C. Correlations between waste streams, with regard to time of generation, waste generating processes, and site-specific facilities shall be clearly described. For newly generated wastes, the rate and quantity of waste to be generated shall be defined. D. A reference list shall be provided that identifies documents, databases, Quality Assurance protocols, and other sources of information that support the acceptable knowledge information. E. Container inventories for TRU mixed waste in retrievable storage shall be delineated into waste streams by correlating the container identification to all of the required and additional AK information. (Section C4-3c)	A. MP-TRUW-8.13 (All) B. MP-TRUW-8.13, S. 3.2.4, 3.3 & Appendix B C. MP-TRUW-8.13, S. 3.2.4, 3.2.5 & 3.3 D. MP-TRUW-8.13, S. 4.0 & 6.0 E. MP-TRUW-8.13, S. 3.3.5, 3.4.3 & 3.5.1.4	Y	A. AK Summary for Supercompacted Debris Waste (BN510.3), RPT-TRUW-83, Rev. 8 **(AK-1)** AK Summary for Special Setups Waste (BN004) RPT-TRUW-59, Rev. 4 **(AK-2)** AK Document for AMWTP Waste, RPT-TRUW-06, Rev. 16 **(AK-5)** AK Document for INL Stored TRU Waste-Rocky Flats Plant, RPT-TRUW-56, Rev. 6 **(AK-6)** AK Forms 1066 TRU Waste Management AK Checklist and 1067 TRU Waste Stream AK Documentation Checklist for waste streams BN510.3 and BN004 **(AK-13)** B. AK Summary for Supercompacted Debris Waste (BN510.3), RPT-TRUW-83, Rev. 8, S. 1.0 **(AK-1)** AK Summary for Special Setups Waste (BN004) RPT-TRUW-59, Rev. 4, S. 1.0 **(AK-2)** AK Document for AMWTP Waste, RPT-TRUW-06, Rev. 16, S. 3.3, 3.5 & 3.6 **(AK-5)**	Y	

	WAP Requirement[2] AMWTP Audit A-15-01 Table C6-2 Acceptable Knowledge (AK) Checklist[1]	Procedure Documented		Example of Implementation/ Objective Evidence, as applicable		Comment (e.g., any change in procedure since last audit, etc.)
		Location	Adequate? Y/N (Why)	Item Reviewed	Adequate? Y/N	
				AK Document for INL Stored TRU Waste-Rocky Flats Plant, RPT-TRUW-56, Rev. 6, S. 3.1, 3.2 & 3.3 **(AK-6)** C. AK Summary for Supercompacted Debris Waste (BN510.3), RPT-TRUW-83, Rev. 8, S. 1.2.3, 1.2.4 & 1.4 **(AK-1)** AK Summary for Special Setups Waste (BN004) RPT-TRUW-59, Rev. 4, S. 1.2.3, 1.2.4 & 1.4 **(AK-2)** AK Document for AMWTP Waste, RPT-TRUW-06, Rev. 16, S. 3.5, 3.6, 3.10 & 7.0 **(AK-5)** AK Document for INL Stored TRU Waste-Rocky Flats Plant, RPT-TRUW-56, Rev. 6, S. 3.2, 3.3 & 22.0 **(AK-6)** AMWTP Waste Stream Designations RPT-TRUW-12, Rev. 24 **(AK-10)** D. AK Source Document Reference List **(AK-19)** E. RPT-TRUW-59, Rev. 4, S. 1.2.3 **(AK-2)** AMWTP-RPT-TRUW-56, Rev. 6, S. 3.5 (**AK-6)**		

	WAP Requirement[2] AMWTP Audit A-15-01 Table C6-2 Acceptable Knowledge (AK) Checklist[1]	Procedure Documented		Example of Implementation/ Objective Evidence, as applicable		Comment (e.g., any change in procedure since last audit, etc.)
		Location	Adequate? Y/N (Why)	Item Reviewed	Adequate? Y/N	
				AK Forms 1066 TRU Waste Management AK Checklist and 1067 TRU Waste Stream AK Documentation Checklist for waste streams BN510.3 and BN004 **(AK-13)** WTS database screen shots for traceability drums **(AK-9)**		
151	If the generator site submitted an AK Sufficiency Determination Request for a specific waste stream, did the site provide all of the requisite information for which approval is sought? (Section C-0b)	MP-TRUW-8.13 S. 3.6	Y	N/A	N/A	The generator is not seeking an AK Sufficiency Determination for the waste streams audited.
	RE-EVALUATING ACCEPTABLE KNOWLEDGE					
152	Does the generator site have written procedures for the augmentation of all acceptable knowledge information using testing. Testing consists of radiography and visual examination. Do site procedures indicate that the following testing will be conducted based upon the results of the Determination Request AKSD denied - 100% RTR or VE (Section C4-1, C-0b)	MP-TRUW-8.13 S. 3.5, 3.6 & 3.8	Y	AK Summary for Supercompacted Debris Waste (BN510.3), RPT-TRUW-83, Rev. 8 **(AK-1)** AK Summary for Special Setups Waste (BN004) RPT-TRUW-59, Rev. 4 **(AK-2)** RTR RTR14-00005 **(AK-23)** RTR14-00006 **(AK-24)** RTR14-00067 **(AK-25)** RTR13-00213 **(AK-26)** RTR13-00275 **(AK-27)** RTR03-00066 **(AK-28)** VE VEB14-00098 **(AK-29)** VEB14-00099 **(AK-30)** VEB14-00100 **(AK-31)**	Y	

	WAP Requirement[2] AMWTP Audit A-15-01 Table C6-2 Acceptable Knowledge (AK) Checklist[1]	Procedure Documented		Example of Implementation/ Objective Evidence, as applicable		Comment (e.g., any change in procedure since last audit, etc.)
		Location	Adequate? Y/N (Why)	Item Reviewed	Adequate? Y/N	
				Data Reconciliation Reports for waste streams BN510.3 and BN004 **(AK-32)**		
155	Does the generator site have procedures for reevaluating acceptable knowledge if the results of the waste characterization indicate that the waste to be shipped does not match the approved waste stream or if the data from radiography or visual examination for waste streams without an AK Sufficiency Determination exhibit this discrepancy? Does this procedure describe how the waste is reassigned, acceptable knowledge reevaluation, and appropriate hazardous waste numbers are assigned? (Section C4-3e)	MP-TRUW-8.13 S. 3.7	Y	AK Discrepancy Resolutions from Characterization and AK Reevaluations **(AK-12)**	Y	
156	Do site procedures indicate that debris wastes are assigned toxicity characteristic EPA numbers based on AK regardless of the quantity or concentration? (C4-3e)	MP-TRUW-8.13 S. 3.5.2.3 & 3.5.2.4	Y	AK Summary for Supercompacted Debris Waste (BN510.3), RPT-TRUW-83, Rev. 8, S. 1.7.2.5.1, Table 3 **(AK-1)** AMWTP Waste Stream Designations RPT-TRUW-12, Rev. 24, Appendix A **(AK-10)**	Y	

	WAP Requirement[2] AMWTP Audit A-15-01 Table C6-2 Acceptable Knowledge (AK) Checklist[1]	Procedure Documented		Example of Implementation/ Objective Evidence, as applicable		Comment (e.g., any change in procedure since last audit, etc.)
		Location	Adequate? Y/N (Why)	Item Reviewed	Adequate? Y/N	
	CRITERIA FOR ASSEMBLING AN ACCEPTABLE KNOWLEDGE RECORD DELINEATING THE WASTE STREAM					
158	If wastes are reassigned to a different waste matrix code based on site visual examination or radiography or Permittee confirmation activities, does the generator site have written documentation to ensure that the following steps are followed: A. Review existing information based on the container identification number and document all differences in hazardous waste number assignments B. If differences exist in the hazardous waste numbers that were assigned, reassess and document all required acceptable knowledge information (Section C4-3b) associated with the new designation C. Reassess and document all testing data associated with the waste D. Verify and document that the reassigned waste matrix code was generated within the specified time period, area and buildings, waste generating process, and that the process material inputs are consistent with the waste material parameters identified during radiography or visual examination E. Record all changes to acceptable knowledge records F. If discrepancies exist in the acceptable knowledge information for the revised waste matrix code, document the segregation of the affected portion of the waste stream, and define the actions necessary to fully characterize the waste (Section C4-3e)	MP-TRUW-8.13 S. 3.7 & 6.0 (Form 1070)	Y	AK Discrepancy Resolutions from Characterization and AK Reevaluations **(AK-12)**	Y	
	DATA QUALITY REQUIREMENTS					
168	Are acceptable knowledge processes consistently applied among all generator sites, and does each generator site comply with the following data quality requirements for acceptable knowledge documentation: A. Precision - The qualitative determinations, such as compiling and assessing acceptable knowledge documentation, do not lend themselves to statistical evaluations of precision. However, the acceptable knowledge information will be addressed by the independent review of acceptable knowledge information during internal and external audits. B. Accuracy - The percentage of waste containers which require reassignment to a new waste matrix code and/or designation of different hazardous waste numbers based on testing data and discrepancies identified by the Permittees during waste confirmation will be reported as a measure of acceptable knowledge accuracy.	A. MP-M&IA-17.2 (All) B. MP-TRUW-8.13, S. 3.9 C. MP-TRUW-8.13, S. 3.2.3 & 3.2.4	Y	A. AMWTP Surveillance Report No. 74798 and Independent Assessment No. IA-14-002 **(AK-20)** B. AK Accuracy Report **(AK-21)** C. AK Forms 1066 TRU Waste Management AK Checklist and 1067 TRU Waste Stream AK Documentation Checklist for waste streams BN510.3 and BN004 **(AK-13)**	Y	

	WAP Requirement[2] AMWTP Audit A-15-01 Table C6-2 Acceptable Knowledge (AK) Checklist[1]	Procedure Documented		Example of Implementation/ Objective Evidence, as applicable		Comment (e.g., any change in procedure since last audit, etc.)
		Location	Adequate? Y/N (Why)	Item Reviewed	Adequate? Y/N	
	C. Completeness - The acceptable knowledge record must contain 100 percent of the information (Permit Attachment C4-3). The usability of the acceptable knowledge information will be assessed for completeness during audits.					
168a	D. Comparability - Comparability is ensured through sites meeting the training requirements and complying with the minimum standards outlined for procedures that are used to implement the acceptable knowledge process. All sites must assign hazardous waste numbers in accordance with Permit Attachment C4-4 and provide this information regarding its waste to other sites who store or generate a similar waste stream. E. Representativeness - Representativeness is a qualitative parameter that will be satisfied by ensuring that the process of obtaining, evaluating, and documenting acceptable knowledge information is performed in accordance with the minimum standards established in Permit Attachment C4. Sites also must assess and document the limitations of the acceptable knowledge information used to assign hazardous waste numbers (e.g., purpose and scope of information, date of publication, type and extent to which waste parameters are addressed). (Section C3-3)	D. MP-TRUW-8.2, S. C4-3a MP-RTQP-14.4 (All) E. MP-TRUW-8.2, S. C4-3a MP-RTQP-14.4 (All) MP-TRUW-8.13, S. 3.2	Y	D. Training records for AKEs and SPMs **(GEN-11)** E. Training records for AKEs and SPMs **(GEN-11)** AK Source Document Summaries for waste stream BN510.3 **(AK-7)** AK Source Document Summaries for waste stream BN004 **(AK-8)**	Y	
169	Does the generator site address quality control by tracking its performance with regard to the use of acceptable knowledge by: 1) assessing the frequency of inconsistencies among information, and 2) documenting the results of waste discrepancies identified by the generator/storage site during waste characterization or the Permittees during waste confirmation using radiography, review of radiography audio/video recordings, or visual examination, or review of visual examination records. In addition, the acceptable knowledge process and waste stream documentation must be evaluated through internal assessments by generator/storage site quality assurance organizations. (Section C4-3e)	MP-TRUW-8.13, S. 3.7, 3.7.1 Note 1, 3.9 & Appendix D, E & G	Y	AK Accuracy Report **(AK-21)** AMWTP Surveillance Report No. 74798 and Independent Assessment No. IA-14-002 **(AK-20)** AK Resolution Ledger **(AK-22)** AK Discrepancy Resolutions in the AK record **(AK-11)** AK Discrepancy Resolutions from Characterization and AK Reevaluations **(AK-12)**	Y	

1. NMED expects a traceability analysis to be performed, the results of which should be presented on this checklist under the "Examples of Implementation" column. Further, the traceability analysis process and results should be discussed in the Final Audit Report.

2. The WAP requirements should be presented in documents, such as procedures. Each of the questions posed under WAP requirements are meant to determine whether procedures are in place or whether documents are evident which demonstrate that the specific WAP requirement is or can be met

AMWTP
Advanced Mixed Waste Treatment Project

RPT-TRUW-83, Rev. 8

Acceptable Knowledge Summary for Supercompacted Debris Waste

Advanced Mixed Waste Treatment Project

Approval:

(Signature on file. See DCR-13010.) 01/28/14

Date

REVISION LOG

Revision Number	Date Approved	Pages Affected	Description of Revision
0	09/10/2010	All	DCR-9081. Initial issue.
1	01/12/11	Various	DCR-9747. References modified to accommodate reference changes within AK baseline document for Hanford waste. Revised to incorporate WIPP WAP permit renewal changes. Editorial corrections
2	01/31/12	Various	DCR-10508. Added changes approved by CBFO in Change Notice 1 to BN510.1 waste stream profile. Incorporated BLUESHEET-077.
3	09/17/12	5, A1, A2	DCR-11583. Added changes approved by CBFO in Change Notice 2 to BN510.1 waste stream profile.
4	02/07/13	Various	DCR-12077. Added changes approved by CBFO in Change Notice 3 to BN510.1 waste stream profile. Periodic review.
5	03/18/13	Various	DCR-12123. Changes made to address NWP and CBFO DRR comments.
6	09/09/13	All	DCR-12229. Entire document revised. Changed to update the document to reflect addition of MFC waste, to incorporate both BN510.1 and BN510.2 into same document, and to incorporate new WIPP permit requirements.
7	11/27/13	All	DCR-12760. Document changed to reflect the addition of SDA debris waste as Supercompactor feedstock. The new WSP is designated as BN510.3.
8	01/28/14	All	DCR-13010. Update document to include LANL debris waste as feedstock to the Supercompactor.

CONTENTS

1.0 WASTE STREAM DESCRIPTION 1
1.1 Waste Stream Number 1
1.2 Basic Waste Stream Information 1
1.3 Waste Stream Description 8
1.4 Process Description 9
1.5 AK Sufficiency Determination 18
1.6 Prohibited Items 19
1.7 Resource Conservation and Recovery Act Determination 20
1.8 Radionuclides 34
2.0 SHIPPING CONSIDERATIONS 36
2.1 Waste Packaging 36
2.2 Flammability Consideration 36
3.0 REFERENCES 36
Appendix A – Approved Feedstock Debris Waste by Original Generator and IDC A1

FIGURES

Figure 1. Flow diagram illustrating the generation and processing of AMWTP supercompacted debris waste 11

Figure 2. Document hierarchy and information flow for AK. 17

TABLES

Table 1. Physical waste form description for BN510.3. 9

Table 2. Waste material parameters for BN510.3 18

Table 3. HWN assignment by generator site for BN510.3. 22

Table 4. Predominant radionuclides expected in debris wastes by generator site. 35

ACRONYMS

AE	Argonne National Laboratory-East (generator site prefix)
AFCI	Advanced Fuel Cycle Initiative
AK	acceptable knowledge
AL/CL	Analytical Laboratory/Casting Laboratory
AMWTF	Advanced Mixed Waste Treatment Facility
AMWTP	Advanced Mixed Waste Treatment Project
ANL-E	Argonne National Laboratory-East
ANL-W	Argonne National Laboratory-West
ATWIR	Annual Transuranic Waste Inventory Report
AW	Materials and Fuels Complex (generator site prefix)
BC	Battelle Columbus (generator site prefix)
BN	AMWTP (generator site prefix)
CBFO	Carlsbad Field Office
CCP	Central Characterization Project
CH	contact-handled
CH-TRAMPAC	Contact-Handled Transuranic Waste Authorized Methods for Payload Control
CWS	Chemical Warfare Service
D&D	decommissioning and dismantling
DOD	U.S. Department of Defense
DOE	U.S. Department of Energy
DOHE	Drum Opening Hood Enclosure
DOS	drum opening station
DOT	U.S. Department of Transportation
DRS	Drum Repacking System
DU	depleted uranium
DWHE	Drummed Waste Handling Enclosure
DWPG	drummed waste packaging glovebox
EBR-II	Experimental Breeder Reactor II
EDMS	electronic document management system
EMOP	eight-drum metal overpack pallet
EPA	U.S. Environmental Protection Agency
EU	enriched uranium
EWR	early waste retrieval
FMF	Fuel Manufacturing Facility
HEPA	high efficiency particulate air
HENC	High-Efficiency Passive Neutron Counter
HLW	high-level waste
HRA	Hot Repair Area
HSG	headspace gas
HWMA	Hazardous Waste Management Act
HWN	hazardous waste number

IDC	item description code
IDR	initial drum retrieval
INL	Idaho National Laboratory
LA	Los Alamos National Laboratory (generator site prefix)
LANL	Los Alamos National Laboratory
LLD	lower limit of detection
LLNL	Lawrence Livermore National Laboratory
LSA	low specific activity
MD	Mound Plant (generator site prefix)
MEK	methyl ethyl ketone
MFC	Materials and Fuels Complex
MPFPD	Mixed Plutonium Finishing Plant Debris
NBL	New Brunswick Laboratory
NDA	non-destructive assay
NRF	Naval Reactors Facility
NWPA	Nuclear Waste Policy Act
PCB	polychlorinated biphenyl
PFP	plutonium finishing plant
PK	process knowledge
PMC	plutonium-molybdenum cermet
POS	Plant Optimization System
PPE	personal protective equipment
PPO	pressed plutonium oxide
R&D	research and development
RCRA	Resource Conservation and Recovery Act
RF	Rocky Flats Plant (generator site prefix)
RH	remote-handled
RL	Richland, Washington Hanford Site (generator site prefix)
RLMPFPCD	Richland Mixed Plutonium Finishing Plant Comprehensive Debris
RTG	radioisotopic thermoelectric generators
RTR	real-time radiography
RWMC	Radioactive Waste Management Complex
SCW	special-case waste
SD	pre-1980 INL-Exhumed SDA Waste (generator site prefix)
SDA	Subsurface Disposal Area
SDOP	six-drum overpack box
SMOP	six-drum metal overpack pallet
SNF	spent nuclear fuel
SWB	standard waste box

TRU	transuranic
TRUCON	TRU waste content codes
TSA-RE	Transuranic Storage Area-Retrieval Enclosure
TSCA	Toxic Substance Control Act
VE	visual examination
VOC	volatile organic compound
WAC	Waste Acceptance Criteria
WCA	Waste Characterization Area
WETP	WIPP experimental test program
WG Pu	weapons-grade plutonium
WIPP	Waste Isolation Pilot Plant
WMC	Waste Matrix Code
WMP	waste material parameter

Advanced Mixed Waste Treatment Project

Acceptable Knowledge Summary for Supercompacted Debris Waste

1.0 WASTE STREAM DESCRIPTION

1.1 Waste Stream Number

BN510.3.

1.2 Basic Waste Stream Information

1.2.1 Waste Stream Name

Supercompacted Debris Waste

1.2.2 Point of Generation

Advanced Mixed Waste Treatment Facility (AMWTF), Building WMF-676

1.2.3 Waste Stream Volume

Projected Volumes:

9,025 100-gallon drums (3,420 m^3) [88]

92 standard waste boxes (SWBs) (295 m^3) [78]

Fifty percent of the debris waste feedstock is estimated to contain greater than 100 nanocuries per gram (nCi/g) transuranic (TRU) alpha activity and 50% contains less than 100 nCi/g TRU alpha activity. [13]

1.2.4 Generation Dates and Rate of Generation

August 2013 – December 2018

The average generation rate for BN510.3 is currently estimated at 200 product drums (76 m^3) per month. [79]

1.2.5 TRUCON Codes

ID121 [2]

1.2.6 Waste Isolation Pilot Plant Waste Stream ID

Waste Stream ID: IN-BN510.3

1.2.7 Summary Category Group

S5000 – Debris Waste [3]

1.2.8 Waste Matrix Code Group

Heterogeneous Debris Waste

1.2.9 Waste Matrix Code

The BN510.3 waste stream is assigned the Waste Matrix Code (WMC) S5490 – Unknown/Other Heterogeneous Debris Category.

The unknown/other-heterogeneous WMC includes waste that is consistent with the definition for the Heterogeneous Debris (S5400), but does not meet the criteria for assignment into the S5410, S5420, S5440, S5450, or S5460 specific-detailed categories.[3] The waste stream consists of supercompacted debris waste.

1.2.10 Description from the Annual Transuranic Waste Inventory Report

The Annual Transuranic Waste Inventory Report (ATWIR) will be updated at the time of the next data call to include the following: BN510.3 waste stream is a newly generated debris waste stream generated from supercompacted 55-gallon containers of debris waste. [28]

1.2.11 Defense and WIPP Land Withdrawal Act Determination for AMWTP Waste

The BN510.3 supercompacted debris waste stream generated at the Advanced Mixed Waste Treatment Project (AMWTP) is a result of compaction of heterogeneous debris waste generated at the AMWTP (BN), Argonne National Laboratory-East (AE), Battelle Columbus (BC), Los Alamos National Laboratory (LA), Materials and Fuels Complex (AW), Mound (MD), Rocky Flats (RF), and the pre-1980 INL-exhumed Subsurface Disposal Area (SDA) waste (SD).[a] The debris waste identified as feedstock to the AMWTP Supercompactor originated from various defense-related sources that include: verification and control technology, weapons activities including defense inertial confinement fusion, defense nuclear waste and material by-products management, defense nuclear waste and materials security and safeguards and security investigations, naval reactors development, defense research and development, and defense nuclear materials production.

a. Hanford debris waste (previously identified with the generator prefix "RL") is no longer processed within the Supercompactor.

1.2.11.1 Defense Evaluation

The DOE/WIPP-02-3122, Transuranic Waste Acceptance Criteria for the Waste Isolation Pilot Plant (WIPP-WAC), requires generator sites to use acceptable knowledge (AK) to determine if the TRU waste streams to be disposed at WIPP meet the definition of TRU "defense" waste. Based on guidance from the U.S. Department of Energy (DOE), a TRU waste is eligible for disposal at WIPP if it has been generated, in whole or by part, by one or more of the activities listed in Section 42 U.S.C. 10101(3) of the Nuclear Waste Policy Act (NWPA) of 1982. The term "atomic energy defense activity" means any activity of the Secretary (of the U.S. Department of Energy) performed in whole or in part in carrying out any of the following functions: [11, 23, 24, 46]

- Naval reactors development
- Weapons activities, including defense inertial confinement fusion
- Verification and control technology
- Defense nuclear materials production
- Defense nuclear waste and materials by-products management
- Defense nuclear waste and materials security and safeguards and security investigations
- Defense research and development.

The BN510.3 supercompacted debris waste is comprised of heterogeneous debris wastes that were the result of one or more previously noted defense related activities at the following DOE sites:

- Rocky Flats
  - The TRU debris wastes generated at RF and shipped to the Idaho National Laboratory (INL) were generated through defense program activities, or commingled with non-defense program waste that cannot be segregated. Furthermore, there is no historical record or evidence of spent nuclear fuel (SNF) or high-level waste (HLW) ever having been handled at the RF facility. [6, 18]
- Mound
  - The majority of the MD debris waste was generated during defense-related operations conducted at the MD for a variety of customers, including Lawrence Livermore National Laboratory, Hanford, Oak Ridge National Laboratory, and the Space Program. Plutonium-238 heat sources were designed and developed for spacecraft, generators, and satellites used directly by the U.S. Department of Defense (DOD) or in support of DOD missions. One of the major space programs supported by MD was the

Space Nuclear Auxiliary Power System, which was sponsored by the DOD. Operations at the facility included processing and recovering plutonium, developing reactor fuels, conducting reactor fuel waste studies, and recovery of tritium and other isotopes for both DOD and domestic or private entities. The radioisotopic content (e.g., plutonium and other TRU isotopes of interest) of the MD debris waste is the result of commingling of wastes from both defense-related and domestic activities. Furthermore, there is no historical record or evidence of SNF or HLW ever having been shipped to the INL from the MD facility. [7, 19]

- Battelle Columbus
  - Debris waste feedstock shipped from BC to the INL was generated during decommissioning and dismantling (D&D) of the JN-3 (Research Reactor Building) and other facilities. Defense-related operations were conducted at BC in support of Army, Navy, and Air Force programs. These operations included weapons-related activities and defense research into plutonium materials properties and development, plutonium metallurgy, actinide joining, and weapons production and assembly. Processing of test shot samples, development of ^{238}Pu heat sources for spacecraft for DOD, and some specialized work for Los Alamos were conducted in the JN-4 Plutonium Laboratory. In addition, there is no historical record or evidence of SNF or HLW ever having being shipped to the INL from the BC facility. [8, 20, 21, 22]
- Argonne National Laboratories–East
  - AE is a multidisciplinary research laboratory that performs work in basic and applied science in the areas of engineering, energy technology, chemistry, physics, materials, biomedicine, and environmental studies. AE has been instrumental in the development of nuclear reactors and associated systems, materials, fuel elements, and components for use in both civilian and defense programs. This work included key participation in the development of essentially all the domestic nuclear reactor systems in use today for isotope production, power generation, and naval submarine propulsion, as well as experimental or proposed applications for weapons destruction, defense waste management, defense security and safeguards, and space propulsion. The New Brunswick Laboratory (NBL), located on the AE campus, serves as the technical extension of the U.S. DOE Office of Safeguards and Security in the areas of nuclear material control and accountability, safeguards, and nonproliferation.[52, 61]
    - Commingling of waste occurred at AE because waste was often generated in small volumes (i.e., less than 55 gallons) and numerous waste items were placed together in the same container either at the generator level and/or during repackaging. AE waste generators routinely commingled waste with no segregation of defense from non-defense waste. In addition, waste materials generated during the ongoing destructive examination of materials from

different programs and contamination from fuel cutting/grinding/polishing activities also occurred within the hot cell examination area. [52, 61]

- AE contact-handled (CH) wastes do not contain intact irradiated fuel pin test specimens and do not contain test residues, test materials, and the resultant test fragments from the fuel pin test specimens (including irradiated pin fragments and dispersed particulates [fines and dust]).[52] These wastes were managed as remote-handled (RH) waste. While AE performs research and experiments on fuel-bearing specimens, it does not possess or manage spent fuel elements. The research laboratory operations were not production operations involving the separation or reprocessing of constituent elements from reactor fuel and the CH waste does not include the high level fission products. These types of wastes were managed separately as RH waste. The CH debris waste is not SNF or HLW. [52, 61]

- Materials and Fuels Complex

  - The atomic energy defense activities that apply to the TRU wastes generated by the Materials and Fuels Complex (MFC) are naval reactors development, defense nuclear materials productions, and defense research and development (R&D). Defense-related research activities include continuing development of advanced reactor concepts, fuel cycle process development, as well as development of homeland security research, decontamination and decommissioning technologies, and reactor and fuel cycle safety. MFC has engaged in the same or similar waste-generating activities throughout its operation. Specific examples of defense related activities include the following:[58, 62]

    - Analysis of plutonium for gallium content
    - Laboratory services for Knolls Atomic Power Laboratory and Argonne National Laboratory–East (ANL-E)
    - Analytical support for the Naval Reactors Facility (NRF) was conducted from June 2000 to October 2004
    - Lawrence Livermore National Laboratory (LLNL) plutonium oxide disk fabrication
    - Experimental Breeder Reactor (EBR)-II fuel and experiments analysis.

    Based on the AK review of the MFC process knowledge (PK) documentation and communication with MFC personnel relating to waste-generating processes, the CH-TRU wastes generated at the MFC in the Analytical Laboratory/Casting Laboratory (AL/CL), Fuel Manufacturing Facility (FMF), and Hot Repair Area/Waste Characterization Area (HRA/WCA) were classified as defense-related wastes. All of the sampled waste that was repackaged in the HRA/WCA was

generated from defense sites, principally Rocky Flats, and, because of the use of shared facilities throughout MFC, may have been inherently commingled with non-defense waste in the HRA/WCA. CH-TRU waste generated at MFC in the FMF (B704), AL/CL (B752), and HRA/WCA (B785) and shipped to the AMWTP is generated from a variety of defense and non-defense related activities associated with processing of radioisotopes in development of nuclear fuel, spent fuel disposition technology, liquid metal technology, nuclear waste stabilization, and new storage technologies for spent fuel and highly radioactive materials. In addition, TRU debris waste is generated within gloveboxes from laboratory support for waste and nuclear material characterization via sample preparation and analyses. Debris waste generated within these gloveboxes is inherently commingled at the point of generation. Only defense related waste and commingled defense/non-defense CH-TRU waste are accepted at the AMWTP for subsequent disposal at WIPP. Defense and non-defense wastes are not intentionally mixed within TRU debris waste shipped to AMWTP. Non-defense related waste that is not inherently commingled with defense-related waste at the point of generation is not shipped to AMWTP. [58, 62]

Processing of intact spent fuel is not conducted in the AL/CL, FMF, or HRA/WCA. While MFC analytical operations may have provided support for analysis of irradiated sample fuel material and/or may have contained fuel waste materials that could be classified as waste incidental to reprocessing, the analytical waste received from MFC does not meet the classification of waste that are incidental to reprocessing. In addition, the MFC analytical waste does not consist of intact fuel elements. Historically, all HLW generated at MFC has been segregated, packaged in appropriately shielded containers, and stored in an onsite HLW storage facility. The Argonne National Laboratory-West (ANL-W)/MFC waste received at the AMWTP is not SNF or HLW and is classified as defense-related waste. [58, 62]

- Subsurface Disposal Area (Pre-1980)
  - From 1954 until 1970, the INL SDA received and disposed of a variety of radioactive waste (including TRU wastes) from multiple sources. The wastes disposed of into the SDA were both defense and non-defense waste. Defense-related wastes initially disposed of within INL Radioactive Waste Management Complex (RWMC) SDA Pits and Trenches were from process and defense-related activities such as: verification and control technology, weapons activities including defense inertial confinement fusion, defense nuclear waste and material by-products management, defense nuclear waste and materials security and safeguards and security investigations, Naval reactors development, defense research and development and defense nuclear materials production. Examples of non-defense waste disposed into the INL RWMC SDA include: civilian reactor wastes, medical wastes, United States Geological Service waste, Colorado School of Mines waste, and wastes from various universities. [72]

- The debris waste associated with the SDA was generated as a result of pre-1980 exhumations within specific INL pits and trenches. During the mid to late 1970s, the INL conducted two SDA exhumations that resulted in the generation of TRU waste and subsequent transportation to the Transuranic Storage Area-Retrieval Enclosure (TSA-RE). The Early Waste Retrieval (EWR) Project from 1976 through 1978 associated with Pits 1 and 2, Trenches 1, 5, 7, 8, 9, and 10. Of the four pre-1980 ER investigations, only two resulted in waste being exhumed and transferred to the TSA-RE. The two INL SDA exhumations that contributed waste to the TSA-RE were associated with the INL Initial Drum Retrieval (IDR) Project, and the INL EWR Project. There is no supporting AK retrieval evidence that indicates unused cyanide wastes were generated and placed in the AMWTP inventory as a result of IDR or EWR retrieval investigations.[72] Segregation practices of defense and non-defense related waste was not employed during the 1970 exhumations.

- Due to the condition of some of the exhumed containers and management practices employed during the retrieval operations, the contents of INL exhumed repackaged waste within the TSA RE are assumed to be a composite of the INL SDA waste contributors. While certain TRU waste items may not have been generated directly from defense activities; based on the activities described above and the inability to separate civilian waste from defense waste, the waste is eligible for disposal at WIPP as a commingled defense waste stream generated "in part" by the atomic energy defense activities. [72, 76]

- The debris waste generated during the pre-1980 exhumation activities are not classified as SNF or HLW. SNF and HLW are not candidates for supercompaction. If found, SNF and HLW will be segregated and managed separately until final disposition determinations are conducted. [72]

- Los Alamos National Laboratory

  - The waste received from LANL for purposes of processing within the AMWTP Supercompactor is generated from defense nuclear materials production, defense nuclear waste and materials by-products management, and/or defense research and development activities. In accordance with interim guidance, defense wastes also include those wastes generated during work involving only defense activities, or during work in which defense and non-defense wastes were mixed in the past and from which the non-defense portion cannot be segregated. [82, 83] Debris waste received from LANL has been generated directly from defense activities and/or is based on the activities described above and the inability to separate civilian waste from defense waste. In addition, the waste is not SNF or HLW. As such, the waste is eligible for disposal at WIPP as a defense waste stream.[23, 24, 82, 83]

stream.[58] The addition of LA wastes to the Supercompactor has been approved by the U.S. Environmental Protection Agency (EPA) through the EPA Tier process and does not result in any additional HWNs.[89] Generation of the BN510.2 waste stream has been discontinued as a result of Carlsbad Field Office approval of the BN510.3 waste stream and subsequent processing of SD debris waste into the Supercompactor.[90]

The supercompacted debris waste (i.e., BN510.3) has a common physical form that contains similar hazardous constituents and is generated from a single process or activity (Table 1).

A list of approved feedstock debris (by generator and item description code [IDC]) is presented in Appendix A, Approved Feedstock Debris Waste by Original Generator and IDC.[90]

Table 1. Physical waste form description for BN510.3.

ATWIR Number	IDC	Waste Matrix Code (WMC)	Description
IN-BN510.3	BN-550	S5490	Debris waste from multiple debris waste feedstock sources that have been supercompacted into pucks and packaged into 100-gallon drums.[a]

a. A list of debris waste feedstock IDCs is presented in Appendix A of this report.

The BN510.3 waste stream consists of various combustible and noncombustible debris materials that originated from AE, AW, BC, LA, MD, RF, and SD, as well as AMWTP self-generated non-polychlorinated biphenyl (PCB) debris waste within WMF-676.[5, 6, 7, 8, 52, 53, 58, 66, 72, 82, 90]

The BN510.3 supercompacted debris waste includes heterogeneous debris such as: paper and rags; gloves; wipes; asbestos; personal protective equipment (PPE); plastic and rubber items; filters; leaded gloves, aprons, bricks, and sheeting; metal with and without lead or cadmium; floor tiles, piping, sheet rock, insulation, and glass; raschig rings; crucibles; fire brick; wood; Plexiglas®; Benelex®; pieces of equipment and tools; lab waste; D&D waste; resins; graphite; grit; aerosol cans; asphalt and concrete packaged in 55-gallon drums, supercompacted, and packaged into 100-gallon product drums. Supercompacted debris may contain small amounts of non-debris waste such as absorbed liquids, soil, dirt, sand, absorbent, or homogeneous solids. Non-debris waste will be less than 50% by volume in each 55-gallon drum of compacted debris.[5, 6, 7, 8, 52, 58, 72, 84, 85]

1.4 Process Description

See waste generation process description in Section 1.4.3.

- Advanced Mixed Waste Treatment Facility
  - The waste generated at the AMWTF (WMF-676) is the result of contact with defense-related TRU debris waste during treatment, characterization, maintenance, repackaging, and management.(5)

In accordance with interim guidance, defense wastes include those wastes generated during work involving only defense activities, or during work in which defense and non-defense wastes were inadvertently mixed in the past and from which the non-defense portion cannot be segregated. Based on the AMWTP's AK documentation for the Supercompactor feedstock waste, the BN510.3 waste stream is defense-related waste.(5, 6, 7, 8, 18, 23, 24, 36, 46, 61, 62, 63, 72, 74, 76, 83, 84, 85, 87, 89, 90)

1.2.11.2 Land Withdrawal Act Evaluation

Public Law 102-579, WIPP Land Withdrawal Act, prohibits the disposal of SNF and HLW as defined by the NWPA at WIPP. According to the NWPA, SNF is defined as "fuel that has been withdrawn from a nuclear reactor following irradiation, the constituent elements of which have not been separated by reprocessing." (46, 63)

In addition, the DOE Radioactive Waste Management Manual expands on this definition to clarify that test specimens of fissionable material irradiated for research and development only, and not production of power or plutonium, may be classified as waste, and managed in accordance with the requirements of this Order (i.e., DOE O 435.1, Radioactive Waste Management) when it is technically infeasible, cost prohibitive, or would increase worker exposure to separate the remaining test specimens from other contaminated material.(41)

High-level waste is defined by the NWPA as "the highly radioactive material resulting from the reprocessing of SNF, including liquid waste produced directly in reprocessing and any solid material derived from such liquid waste that contains fission products in sufficient concentrations, and other highly radioactive material that the Commission, consistent with existing law, determines by rule requires permanent isolation." (46)

Based on the AMWTP's AK documentation for the Supercompactor feedstock wastes, the BN510.3 waste stream does not meet the definition of HLW or SNF. (5, 6, 7, 8, 61, 62, 72, 73, 74, 76, 83, 84, 85, 87, 89, 90)

1.3 Waste Stream Description

1.3.1 BN510.3 Supercompacted Debris Waste

The BN510.3 newly generated debris waste stream is generated from supercompaction of 55-gallon containers of debris waste. The Waste Stream Profile Form for BN510.3 was developed due to the addition of SD feedstock debris waste and the addition of the D033 (hexachlorobutadiene) hazardous waste number that was not assigned to the BN510.2 waste

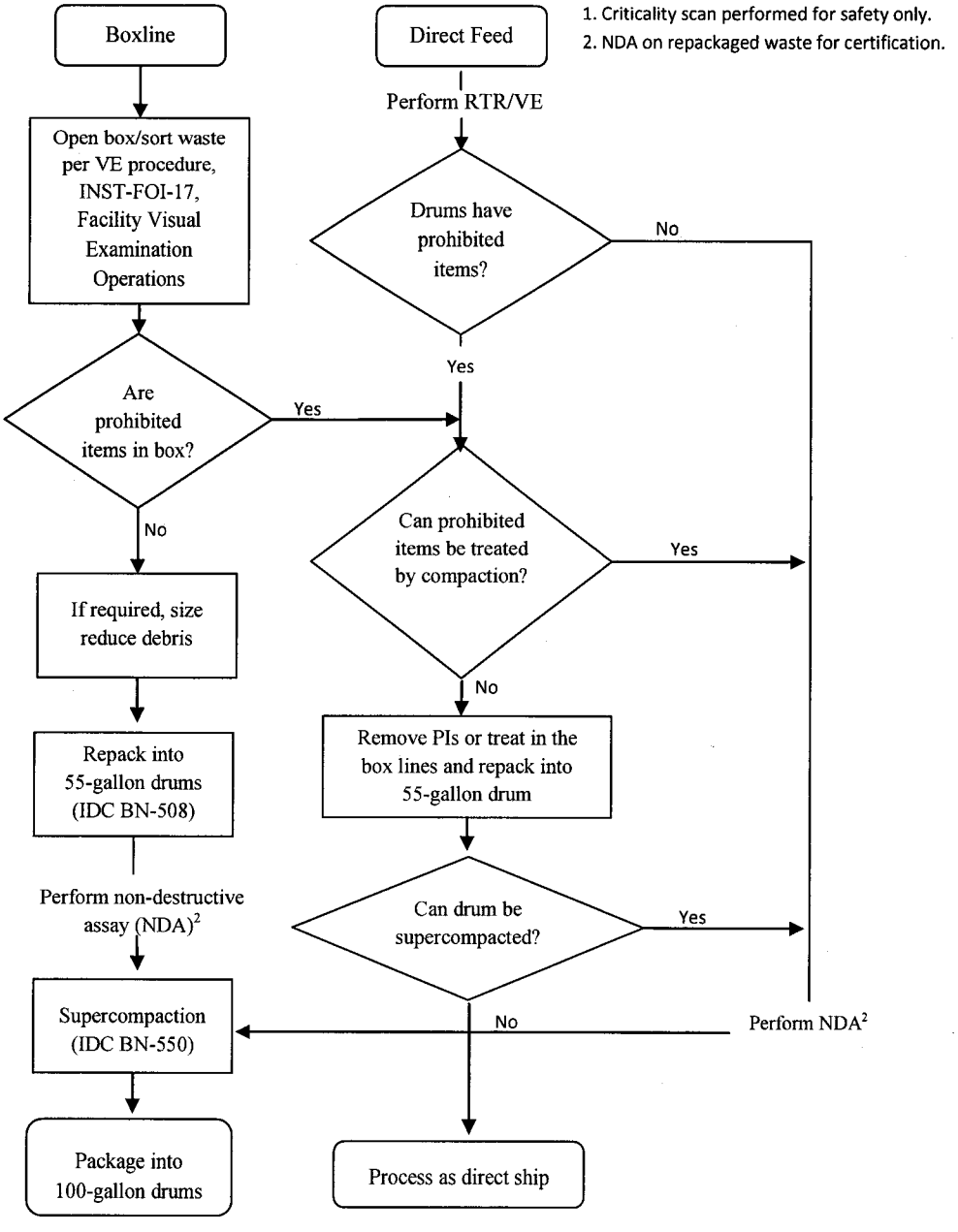

Figure 1. Flow diagram illustrating the generation and processing of AMWTP supercompacted debris waste.

1.4.1 Areas of Operation

The BN510.3 waste stream is generated by supercompaction of debris waste feedstock at the AMWTF in Building WMF-676. [9, 29, 54, 55, 68, 70]

1.4.2 Process Flow Diagram

Figure 1 presents a flow diagram illustrating the generation and processing of AMWTP supercompacted debris waste.

1.4.3 Waste Generating Process

1.4.3.1 BN510.3 Supercompaction Process

The AMWTP waste generation process is supercompaction of individual 55-gallon drums of debris waste feedstock into pucks (the final waste form). Debris waste feedstock contained in 55-gallon drums is characterized and validated through radioassay and real-time radiography (RTR)/visual examination (VE) to verify contents and then sent directly to the Supercompactor for processing. [10, 31, 32, 33, 34]

Debris waste feedstock containers (e.g., 55- or 85-gallon drums) may be introduced into WMF-676 for container and waste management. Waste container preparation, handling, and repackaging are conducted in the WMF-676 Drum Repack System (DRS). The DRS consists of the drummed waste handling enclosure (DWHE), the drum opening hood enclosure (DOHE), which includes the drum opening station (DOS) and the drummed waste packaging glovebox (DWPG), and the special-case waste (SCW) glovebox.[75] Boxes of waste, including overpack boxes, undergo assay and are introduced into a box line for sorting and repackaging into 55-gallon drums. [67] The overpack boxes with uncharacterized drums undergo RTR to confirm the waste is >50% debris in each drum. [10, 31, 57] The drum contents are then visually examined in the box line trough to confirm the waste is approved feed stock.[9] The legacy retrieved boxed wastes undergo RTR to confirm the waste form is approved feed stock. Certified VE is performed on the waste processed in the box line as IDC BN-508. Prohibited items that can be treated may be treated in the box line or sent to the special-case waste (SCW) glovebox. If applicable, after treating, sorting, and/or removal of prohibited item(s), the waste is repackaged into 55-gallon drums as IDC BN-508. [9, 10, 46] No campaigning of approved feedstock type or generator site debris waste feedstock occurs during the supercompaction process. Cleanouts of the box line(s) occur for periodic housekeeping or potential PCB cleanups or to prevent cross-contamination. [9, 53, 54, 55] Repackaged waste drums and direct feed drums (not requiring repack) are fed into the Supercompactor.

The Supercompactor is a glovebox with a 2,000-ton capacity compactor. The Supercompactor size-reduces 55-gallon waste drums to roughly one-fifth their normal size. The supercompacted drums (pucks) are then packaged into 100-gallon containers (puck drums).

The debris waste feedstock is introduced into the Supercompactor as any of the following:

- Direct feed (in original 55-gallon drums from the generator site)
- From the WMF-676 DRS (e.g., DWPG) where containerized waste can be un-overpacked, treated, sorted, or repackaged
- From the waste treatment box line(s) where boxed waste is treated, sorted, size-reduced, and repackaged into 55-gallon drums.

The boxed waste includes multi-drum overpacks (six-drum overpack boxes [SDOPs], eight-drum metal overpack pallets [EMOPs], and six-drum metal overpack pallets [SMOPs]) containing up to eight 55- or six 85-gallon drums). An SDOP is a six-drum overpack wood box, an EMOP is an eight 55-gallon drum metal pallet, and an SMOP is a six 85-gallon drum metal pallet. The multi-drum overpacks are of two types: [10, 31, 56, 57]

(1) The first type is packaged with characterized debris drums for processing in AMWTF. These contain drums with IDCs confirmed by RTR or VE to be approved feedstock debris waste.

(2) The second type is packaged with drums that are not characterized but are labeled with historical AK information that indicates approved feedstock debris waste.

Legacy retrieved boxes from the generators include Sandia steel boxes, bins, fiberglass reinforced plywood boxes, and cake boxes.

After compaction, the drum pucks are loaded into the final 100-gallon drums (IDC BN-550) for shipment to WIPP. [9] No additional chemicals or waste constituents are added to the supercompacted debris waste as a result of this process.

Debris waste generated during WMF-676 maintenance, hot maintenance cell size reduction, repackaging, and VE is also included in the Supercompactor feedstock. This facility-generated waste is visually examined. AMWTP does not add additional hazardous chemicals or waste constituents to the supercompacted debris waste as a result of this process. [10, 29, 54, 55, 56, 68]

The plant optimization system (POS) is used to optimize processing drums through the Supercompactor to produce 100-gallon drums (containing compacted drum pucks) to meet the WIPP Waste Acceptance Criteria (WAC). [4, 9, 26]

1.4.4 Material Inputs

The BN510.3 supercompacted debris waste includes heterogeneous debris such as paper and rags; gloves; wipes; asbestos; PPE; plastic and rubber items; filters; leaded gloves, aprons, bricks, and sheeting; metal with and without lead or cadmium; floor tiles; piping; sheet rock; insulation; glass; raschig rings; crucibles; fire brick; wood; Plexiglas®; Benelex®; pieces of equipment and tools; lab waste; D&D waste; resins; graphite; grit; aerosol cans; asphalt and concrete from multiple DOE sites (i.e., AE, AW, BC, BN, LA, MD, RF and SD) that are approved Supercompactor feedstock. [6, 7, 8, 28, 52, 58, 72, 82, 84, 85, 86, 87, 90, 91] Graphite may be part of the feedstock but does not make up >1% by weight of the feedstock in this waste stream. Supercompacted debris may contain small amounts of non-debris waste such as absorbed liquids, soil, dirt, sand, absorbent, or homogeneous solids. Non-debris waste will be less than 50% by volume in each 55-gallon drum of compacted debris.

The AMWTP retrievably-stored feedstock debris waste was generated at the AE, AW, BC, LA, MD, RF, and SD. The feedstock debris waste was generated during plutonium pit production; depleted uranium component fabrication; enriched uranium processing; support operations including radionuclide recovery, waste treatment, maintenance, laboratory analysis, and machining of non-nuclear weapon components; R&D; special order work; fabrication of ^{238}Pu heat sources and manufacture of radioisotopic thermoelectric generators; D&D activities; and materials development. (6, 7, 8, 52, 58, 72, 82, 90)

The BN debris waste feedstock is generated as a result of AMWTP waste facility maintenance operations, treatment (i.e., supercompaction, absorption of prohibited liquids, and removal of prohibited items), characterization, and general container management activities. (5)

The waste contributions into the BN510.3 waste stream originated at the following DOE facilities operations: (5)

- RF
  - Plutonium metal and plutonium-containing materials manufacture, recovery, and treatment (6)
  - Plutonium production support operations including maintenance, laboratory activities, and R&D (6)
  - Non-routine events including renovations, spills, fires, and decommissioning (6)
  - Construction, demolition, and D&D operations. (6)
- MD
  - D&D of the Mound Plant Facility (7)
  - Pressed plutonium oxide (PPO) sphere and plutonium-molybdenum cermet (PMC) production (7)
  - Plutonium and other isotopic recovery (7)
  - Plutonium manufacture support such as laboratory activities and R&D (7)
  - Facility maintenance. (7)
- BC
  - Research into the metallurgical and ceramic properties of plutonium and its alloys (8)
  - Plutonium processing (8)
  - Development of nuclear fuels (8)
  - D&D of the BC facilities. (8)

- AE
  - Support activities associated with the development and testing of various breeder reactor systems [52]
  - Laboratory operations associated with R&D/DOE waste management and supporting the examining/evaluating of nuclear fuel [52]
  - Repackaging activities [52]
  - Decontamination and decommissioning activities [52]
  - General plant operations including waste management and maintenance. [52]
- AW
  - Recovery of actinides such as plutonium and other radionuclides and characterization of nuclear materials [58]
  - Experimental fabrication of fuel rods, rodlets, slugs, and blankets [59]
  - Transmutation of actinides experiments in support of DOE programs (e.g., Advanced Fuel Cycle Initiative [AFCI], naval reactor, Generation IV Nuclear Reactor, and Space Nuclear Programs) using the recovered plutonium and other actinides [58]
  - Maintenance and decontamination of related equipment and gloveboxes [59]
  - Characterization of WIPP candidate CH-TRU waste (non-radionuclide processing), i.e., headspace gas sampling, visual examination, coring and sample collection. [59]
- SD
  - Pre-1980 INL SDA exhumations. [72]
- LA
  - Defense nuclear materials production [82]
  - Defense nuclear waste and materials by-products management [82]
  - Defense research and development. [82]
- BN
  - Characterization activities [5]
  - Repackaging activities [5]
  - Waste treatment activities including size reduction of large items, supercompaction, absorption of prohibited liquids, and removal of prohibited items [5]

- Facility operations including waste management and maintenance. [5]

The feedstock debris waste received and stored at the AMWTP is packaged in 55- or 85-gallon drums and a variety of boxes, bins, and crates. These boxes, bins, and crates are constructed of metal, plywood, or fiberglass-reinforced plywood and processed in the box lines. Drums of waste may also be packaged in overpack boxes for feedstock to the box lines for processing.

The types of feedstock debris waste containers are as follows:

- Direct feed 55-gallon drums identified by generator (AE, AW, BC, BN, MD, RF, and SD) assigned IDCs
- Boxed debris waste from AE, AW, BC, BN, LA, MD, RF, and SD that is processed in the box line. [75]

The direct feed 55-gallon feedstock debris waste containers retain their generator assigned IDCs until compaction. [1]

1.4.4.1 Supporting AK Documents

The AK document for AMWTP waste, RPT-TRUW-06, Acceptable Knowledge Document for AMWTP Waste, [5] was compiled to provide AK for the AMWTP newly-generated wastes in accordance with MP-TRUW-8.13, Collection, Review, and Management of Acceptable Knowledge Documentation. [12] RPT-TRUW-56, Acceptable Knowledge Document for INL Stored Transuranic Waste – Rocky Flats Plant; RPT-TRUW-13, Acceptable Knowledge Document for INL Stored Waste–Mound Plant Waste; RPT-TRUW-04, Acceptable Knowledge Document for the Battelle Columbus Laboratories Building JN-4 Plutonium Laboratory; RPT-TRUW-89, Acceptable Knowledge Document for Argonne National Laboratory-East Waste; RPT-TRUW-79, Acceptable Knowledge Document for Materials and Fuels Complex Waste; and RPT-TRUW-82, Acceptable Knowledge Document for Hanford Debris Waste Shipped to AMWTP;[b] RPT-TRUW-91, Acceptable Knowledge Document for Pre-1980 INL-Exhumed SDA Waste; and RPT-TRUW-93, Acceptable Knowledge Document for Los Alamos National Laboratory are the AMWTP AK documents for the RF, MD, BC, AE, AW, RL, SD, and LA facilities, respectively. [6, 7, 8, 28, 52, 58, 72, 82, 90]

The flow of the AMWTP AK documentation is presented in Figure 2.

b. RPT-TRUW-82 is cited solely for contribution to the F-listed HWN assignment.

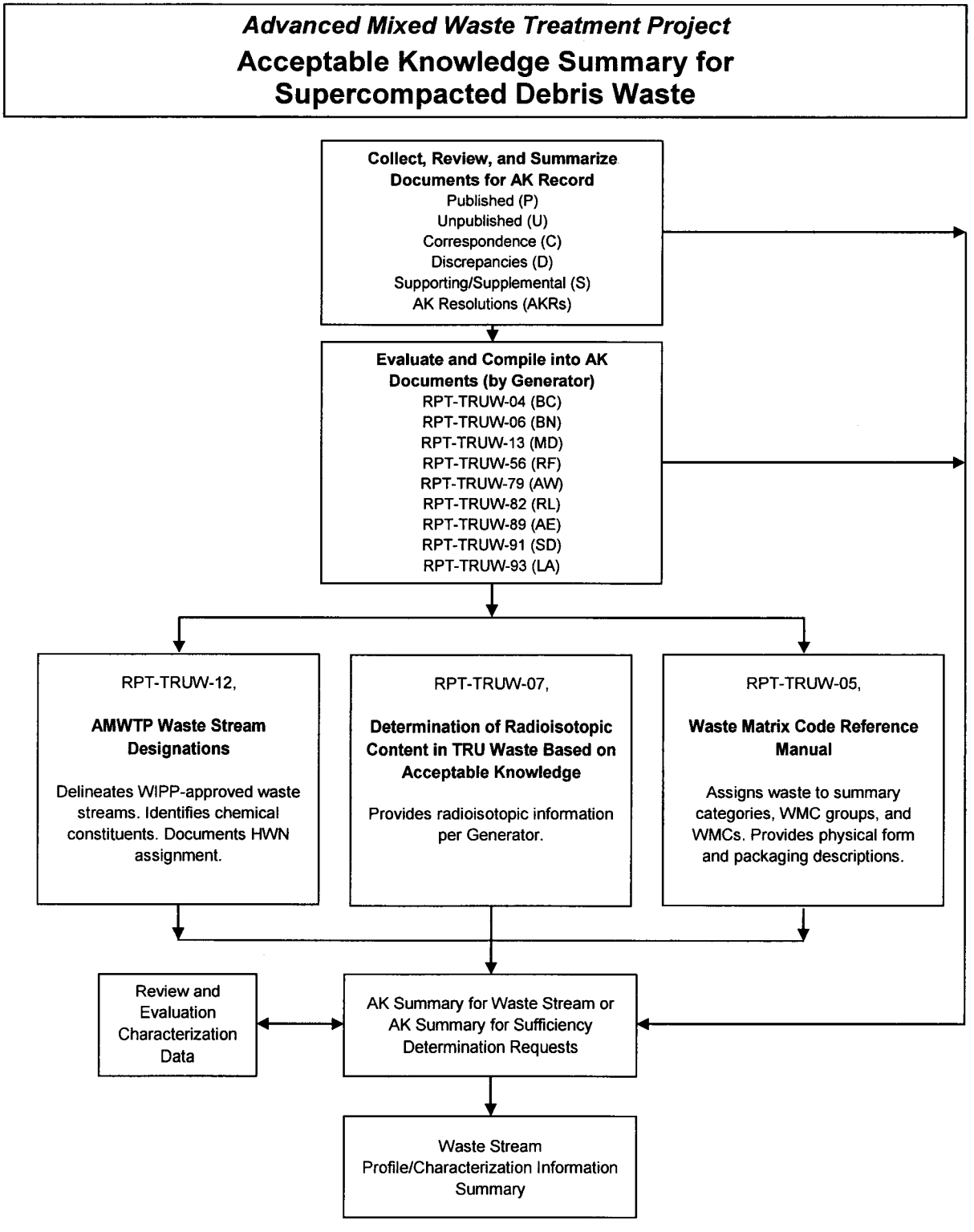

Figure 2. Document hierarchy and information flow for AK.

1.4.5 Waste Material Parameters

1.4.5.1 BN510.3 Supercompacted Debris Waste

The estimated waste material parameter (WMP) weight percentages for the BN510.3 waste stream are based on the VE data for BN510.1 100-gallon product drums generated from July 2, 2010, through September 9, 2013. WMP data for 9,137 containers with completed RTR/VE data from the BN510.1 waste stream were obtained from the AMWTP Waste Tracking System database for containers. The WMP weight parameters based on BN510.1 data are representative of the BN510.3 waste stream. The estimated WMP weights (by percent) for the BN510.3 waste stream were calculated in accordance with the requirements of MP-TRUW-8.13. The WMPs for BN510.3 are summarized in Table 2. [12, 45, 90, 92]

Table 2. Waste material parameters for BN510.3. [45, 90, 92] c

Waste Material Parameters	Estimated Percent WMP Weight/Unit Waste
Iron-based Metals/Alloys	74
Aluminum-based Metals/Alloys	<1
Other Metals	1
Other Inorganic Materials	2
Cellulosics	15
Rubber	1
Plastics (waste materials)	7
Inorganic Matrix	<1
Organic Matrix	<1
Soils/Gravel	<1

1.5 AK Sufficiency Determination

No AK sufficiency determinations apply to this waste stream.

c. No significant changes to the WMPs are expected as a result of adding LANL debris waste to the Supercompactor.[92]

1.6 Prohibited Items

The following items are prohibited in waste containers shipped to WIPP as documented in MP-TRUW-8.1, Certification Plan for INL Transuranic Waste, and MP-TRUW-8.2, Quality Assurance Project Plan. [4, 26]

- Liquid waste and prohibited observable liquids
- Sealed containers greater than 4 liters
- Non-radionuclide pyrophoric materials
- Hazardous wastes not occurring as co-contaminants with TRU mixed wastes
- Wastes incompatible with backfill, seal and panel closure materials, container and packaging materials, shipping container materials, or other wastes
- Wastes containing explosives or compressed gases
- Wastes with PCBs not authorized under an EPA PCB waste disposal authorization
- Wastes exhibiting the characteristic of ignitability, corrosivity, or reactivity (hazardous waste numbers [HWNs] D001, D002, or D003)
- Waste that has ever been managed as high-level waste and waste from tanks specified in Table C-5 (MP-TRUW-8.2, Section C-1c), unless specifically approved through as WIPP RCRA Permit Modification
- High-level waste and SNF as identified in the WIPP Land Withdrawal Act (and as defined in the Nuclear Waste Policy Act of 1982). [46, 63]
- Any waste container from a waste stream which has not undergone either radiographic or visual examination of statistically representative subpopulation of the waste stream.

Supercompaction is the treatment for unprotected sharp objects and sealed containers greater than 4 liters that do not contain prohibited liquids. Because there are no layers of confinement following supercompaction, it is also the treatment for excess layers of confinement.

Feedstock debris wastes that are identified as containing prohibited items during RTR or by VE during box line processing of wastes are treated in the box line, treated by supercompaction, have the prohibited item(s) removed, or are rejected, as appropriate.

Box line(s) are used to VE and repackage the boxed debris waste into 55-gallon drums. Debris waste treated, repackaged, or examined in the WMF-676 DRS (e.g., DWPG), and waste from maintenance and cleanup activities, are packaged according to procedures, subjected to RTR/VE, and undergo nondestructive assay. [33] These drums are then supercompacted and the

pucks packaged into a 100-gallon product drum. The final 100-gallon Supercompactor product drums are identified as AMWTP IDC BN-550. [9, 10, 77, 90, 91]

Prohibited items that can be treated to remove the prohibited characteristic are managed as newly-generated waste. Containers with WIPP-prohibited liquids may be treated using the following non-hazardous materials: Aquaset®, Aquaset II-G®, Petroset II® or Petroset IIG®, Micro-Cel® E, PIG®, or SP-400® absorbents or Hg Absorb for mercury to render the waste acceptable prior to shipment. [37, 38, 47, 48, 49, 51, 64] Newly-generated waste is characterized and assigned to an appropriate waste stream. [4, 26] In the event the treatment renders an acceptable debris waste form that can be compacted, it is included in this waste stream as IDC BN-508.

Prohibited items may be treated in the box lines or processed in the SCW glovebox. [9, 10, 26, 29, 54] Nonhazardous pressurized fire extinguishers or other approved pressurized large cylinders may be vented by a controlled release in the box lines. Box line processes may perform absorption of free liquids in accordance with approved methods. SCW treatment includes management of containers with liquids, pressurized containers, collected free liquids, collected residual liquids, and elemental mercury in accordance with approved methods. After treating, sorting, and/or removal of prohibited item(s), the waste is repackaged into 55-gallon drums as IDC BN-508 if greater than 50% debris by volume. [9, 10, 46, 54, 70]

Some prohibited items are approved for treatment by supercompaction. [60] Supercompaction of 55-gallon drums is the treatment for unprotected sharp objects, pressurized aerosol cans that contain a total liquid volume confirmed by RTR of less than or equal to 49 mL, mixed waste containers with an observable liquid volume confirmed by RTR of not greater than 5% by volume of the waste container, and sealed containers greater than 4 liters. [31, 43, 59, 60, 65, 71] Because there are no layers of confinement following supercompaction, it is also the treatment for excess layers of confinement. [9, 10, 26, 64, 65]

Drums of direct feedstock debris waste identified during RTR/VE as containing PCB items are segregated or sent to DWPG or SCW for item removal. [1, 16, 29, 30, 54] PCB items identified in boxed debris are removed during box line operations. PCB-contaminated waste identified during box line processing is cleaned up in accordance with applicable AMWTP procedures. [53] PCB items removed from feedstock debris waste drums and boxes or generated during the box line PCB cleanup operation are packaged as newly-generated waste and are not authorized as part of this waste stream.

None of the supercompacted debris 100-gallon product drums (BN-550) shipped to WIPP will contain prohibited items.

1.7 Resource Conservation and Recovery Act Determination

The BN510.3 waste is (and has been) subject to the State of Idaho Hazardous Waste Management Act (HWMA)/Resource Conservation and Recovery Act (RCRA) requirements (e.g., 40 CFR 264, Standards for Owners and Operators of Hazardous Waste Treatment, Storage, and Disposal Facilities, and 40 CFR 265, Interim Status Standards for Owners and Operators of

Hazardous Waste Treatment, Storage, and Disposal Facilities) and is currently being managed under the AMWTP RCRA-permitting requirements until it is shipped offsite. [43, 44]

1.7.1 BN510.3 Supercompacted Debris Waste

1.7.1.1 EPA Hazardous Waste Numbers

The BN510.3 supercompacted debris waste is characterized as mixed TRU waste. The HWNs assigned to this waste stream include HWNs associated with the feedstock debris waste as originally compiled in AMWTP AK documents. [5, 6, 7, 8, 28,30, 52, 58, 72, 77, 82, 84, 85, 87, 90, 91]

Toxicity characteristic HWNs applied to the repackaged debris waste are:[1, 5, 6, 7, 8, 28, 30, 52, 58, 72, 77, 82, 84, 85, 87, 90, 91]

D004 (arsenic), D005 (barium), D006 (cadmium), D007 (chromium), D008 (lead), D009 (mercury), D010 (selenium), D011 (silver), D022 (chloroform), D027 (1,4 dichlorobenzene), D028 (1,2-dichloroethane), D029 (1,1 dichloroethylene), D030 (2,4 dinitrotoluene), D032 (hexachlorobenzene), D033 (hexachlorobutadiene), D034 (hexachloroethane), D037 (pentachlorophenol), and D043 (vinyl chloride).

Listed HWNs applied to this waste stream are: [1, 5, 6, 7, 8, 28, 30, 52, 58, 72, 77, 82, 84, 85, 87, 90, 91]

F001: 1,1,1-trichloroethane, 1,1,2-trichloro-1,2,2-trifluoroethane, 1,1,2,2-tetrachloro-1,2 difluoroethane, carbon tetrachloride, methylene chloride, tetrachloroethylene, trichloroethylene, and, trichlorofluoromethane

F002: 1,1,1-trichloroethane, 1,1,2-trichloro-1,2,2-trifluoroethane, 1,1,2-trichloroethane, 1,2-dichlorobenzene, chlorobenzene, methylene chloride, tetrachloroethylene, trichloroethylene, and trichlorofluoromethane

F004: cresols, cresylic acid, and nitrobenzene

F005: 2-ethoxyethanol, 2-nitropropane, benzene, carbon disulfide, isobutanol, methyl ethyl ketone (MEK), pyridine, and toluene

F006, F007, and F009: electroplating waste.

The HWNs assigned to the BN510.3 wastes generated in the WMF-676 facility as a result of supercompaction are derived from the compilation of all EPA HWNs assigned to the approved feedstock debris waste from the contributing generator sites (Table 3). The RL waste is no longer processed as feedstock and has been shipped. Table 3 only identifies the F-listed HWNs and constituents based on the RCRA mixture and the derived from rules. [5, 6, 7, 8, 28, 39, 40, 42, 52, 58, 72, 77, 82, 84, 85, 87, 90, 91]

Table 3. HWN assignment by generator site for BN510.3.

Generator Site/Activity	Arsenic D004	Barium D005	Cadmium D006	Chromium D007	Lead D008	Mercury D009	Selenium D010	Silver D011	Chloroform D022	1,4-Dichlorobenzene D027	1, 2-Dichloroethane D028	1,1-Dichloroetthylene D029	2,4-Dinitrotoluene D030	Hexachlorobenzene D032	Hexachlorobutadiene D033	Hexachloroethane D034	Pentachlorophenol D037	Vinyl Chloride D043	Spent Solvents F001	Spent Solvents F002	Spent Solvents F004	Spent Solvents F005	Electroplating waste F006 F007 F009
Rocky Flats (RF) [6]																							
Isotope recovery [b]	•	•	•	•	•	•	•	•															
Laboratory reagents, research	•	•	•	•	•	•	•	•	•													• [a]	
Degreasing, decontamination																			• [a]	• [a]			
Cleaning, spill clean up																						• [a]	
Electroplating																							• [a]
Based on AK/HSG											•	•											
Mound Plant (MD) [7]																							
PPO & PMC production and isotope recovery [b]	•	•	•	•	•	•	•	•															
Cleaning and degreasing																			• [c]	• [c]		• [c]	
Electroplating																							• [c]
Based on AK/HSG									•			•											

Table 3 (continued)

Activity	Arsenic D004	Barium D005	Cadmium D006	Chromium D007	Lead D008	Mercury D009	Selenium D010	Silver D011	Chloroform D022	1,4-Dichlorobenzene D027	1, 2-Dichloroethane D028	1,1-Dichloroetthylene D029	2,4-Dinitrotoluene D030	Hexachlorobenzene D032	Hexachlorobutadiene D033	Hexachloroethane D034	Pentachlorophenol D037	Vinyl Chloride D043	Spent Solvents F001	Spent Solvents F002	Spent Solvents F004	Spent Solvents F005	Electroplating waste F006 F007 F009
Battelle Columbus (BC) [8]																							
Metallurgical research		•	•	•	•	•		•															
Cleaning and degreasing																			• [d]	• [d]		• [d]	
Argonne National Laboratory – East (AE) [52]																							
Laboratory Operations [e]	•	•	•	•	•	•	•	•		•	•	•	•				•			• [e]	• [e]	• [e]	
Research Generated [e]	•	•	•	•	•	•	•	•		•	•	•	•				•			• [e]	• [e]	• [e]	
D&D [e]	•	•	•	•	•	•	•	•		•	•	•	•				•			• [e]	• [e]	• [e]	
Based on AK/HSG [e]	•	•	•	•	•	•	•	•		•	•	•	•				•			• [e]	• [e]	• [e]	

Table 3 (continued)

Activity	Arsenic D004	Barium D005	Cadmium D006	Chromium D007	Lead D008	Mercury D009	Selenium D010	Silver D011	Chloroform D022	1,4-Dichlorobenzene D027	1, 2-Dichloroethane D028	1,1-Dichloroetthylene D029	2,4-Dinitrotoluene D030	Hexachlorobenzene D032	Hexachlorobutadiene D033	Hexachloroethane D034	Pentachlorophenol D037	Vinyl Chloride D043	Spent Solvents F001	Spent Solvents F002	Spent Solvents F004	Spent Solvents F005	Electroplating waste F006 F007 F009
Hanford [28, 39, 40, 42]																							
PFP plutonium metal production operations and glovebox activities including maintenance, clean out, D&D and stabilization:																							
• RLMPDT.001 (MPFPD)																							
• RLMPFPCD																			•[f]	•[f]	•[f]	•[f]	
Radiochemistry Processing Laboratory operations and maintenance (RLM325D.001)																			•[f]	•[f]	•[f]	•[f]	
Metallurgy operations, cleanout, and D&D (RLM231ZD.001)																			•[f]	•[f]		•[f]	

Table 3 (continued)

Activity	Arsenic D004	Barium D005	Cadmium D006	Chromium D007	Lead D008	Mercury D009	Selenium D010	Silver D011	Chloroform D022	1,4-Dichlorobenzene D027	1, 2-Dichloroethane D028	1,1-Dichloroetthylene D029	2,4-Dinitrotoluene D030	Hexachlorobenzene D032	Hexachlorobutadiene D033	Hexachloroethane D034	Pentachlorophenol D037	Vinyl Chloride D043	Spent Solvents F001	Spent Solvents F002	Spent Solvents F004	Spent Solvents F005	Electroplating waste F006 F007 F009
Materials and Fuels Complex (AW)[58]																							
Radionuclide Processing CH-TRU Debris Waste	•	•	•	•	•	•	•	•	•										•[g]	•[g]		•[g]	
Ash Stabilization and GGE Debris Waste IDC AW-165	•	•	•	•	•	•	•	•											•[g]	•[g]		•[g]	
HRA/WCA debris IDC AW-164	•	•	•	•	•	•	•	•	•	•	•	•	•	•		•	•	•	•[g]	•[g]	•[g]	•[g]	•[g]
Subsurface Disposal Area (SD)[72]																							
Pre-1980 exhumations	•	•	•	•	•	•	•	•	•	•	•	•	•	•	•	•	•	•	•[h]	•[h]	•[h]	•[h]	•[h]
Los Alamos National Laboratory (LA)[84, 85, 87]																							
LA-007: Mixed Heterogeneous Debris from TA-55	•	•	•	•	•	•	•	•	•										•[i]	•[i]		•[i]	
LA-009: Heterogeneous Debris from the TA-21	•	•	•	•	•	•	•	•	•										•[i]	•[i]		•[i]	
LA-010: Heterogeneous Debris Waste from TA-50	•	•	•	•	•	•	•	•	•	•	•	•	•				•	•	•[i]	•[i]	•[i]	•[i]	•[i]

Table 3 (continued)

Activity	Arsenic D004	Barium D005	Cadmium D006	Chromium D007	Lead D008	Mercury D009	Selenium D010	Silver D011	Chloroform D022	1,4-Dichlorobenzene D027	1, 2-Dichloroethane D028	1,1-Dichloroetthylene D029	2,4-Dinitrotoluene D030	Hexachlorobenzene D032	Hexachlorobutadiene D033	Hexachloroethane D034	Pentachlorophenol D037	Vinyl Chloride D043	Spent Solvents F001	Spent Solvents F002	Spent Solvents F004	Spent Solvents F005	Electroplating waste F006 F007 F009
AMWTP (BN)																							
Newly generated waste from composited feedstock (i.e., supercompaction operations)	•	•	•	•	•	•	•	•	•	•	•	•	•	•	•	•	•	•	• [j]	• [j]	• [j]	• [j]	• [j]

Table 3 (continued)

NOTES:

a. RF – F001 = 1,1,1-trichloroethane, 1,1,2-trichloro-1,2,2-trifluoroethane, carbon tetrachloride, tetrachloroethylene and trichloroethylene; F002 = 1,1,1-trichloroethane, 1,1,2-trichloro-1,2,2-trifluoroethane, methylene chloride, tetrachloroethylene, and trichloroethylene; and F005 = 2-ethoxyethanol, benzene, carbon disulfide, methyl ethyl ketone, and toluene; and F006, F007, and F009 are assigned due to electroplating waste contamination.

b. Process used to recover radioisotopes (e.g., plutonium, americium, neptunium) which caused precipitation of metals as well as the radionuclides.

c. MD – F001 = 1,1,1-trichloroethane, 1,1,2-trichloro-1,2,2-trifluoroethane, carbon tetrachloride, and methylene chloride; F002 =1,1,1-trichloroethane, 1,1,2-trichloro-1,2,2-trifluoroethane, and methylene chloride; F005 = benzene, carbon disulfide, MEK, and toluene. F007 and F009 HWNs are assigned due to electroplating waste contamination.

d. BC – F001 = methylene chloride and trichloroethylene; F002 = methylene chloride and trichloroethylene; and F005 = benzene, MEK, and toluene.

e. AE – D019 carbon tetrachloride, assigned to AE waste, is covered under the F001 assigned to the BN510.1 waste stream. F002 = 1,1,1-trichloroethane, 1,1,2-trichloro-1,2,2-trifluoroethane, chlorobenzene, methylene chloride, tetrachloroethylene, and trichloroethylene; F004 = nitrobenzene; F005 = benzene, carbon disulfide, isobutanol, MEK, and toluene. Due to the commingling of AE waste and management based on content codes during the early years of shipment, the applicable AE HWNs/constituents associated with AE heterogeneous debris waste are the same for all activities.

f. RL – F001 = 1,1,1-trichloroethane, 1,1,2-trichloro-1,2,2-trifluoroethane, 1,1,2,2-tetrachloro-1,2-difluoroethane, carbon tetrachloride, methylene chloride, tetrachloroethylene, trichloroethylene, and trichlorofluoromethane; F002 = 1,1,1-trichloroethane, 1,1,2-trichloro-1,2,2-trifluoroethane, 1,2-dichlorobenzene, chlorobenzene, methylene chloride, tetrachloroethylene, trichloroethylene, and trichlorofluoromethane; F004 = cresols and nitrobenzene; and F005 = 2-nitropropane, benzene, carbon disulfide, isobutanol, MEK, pyridine and toluene. Listed HWN constituents identified in footnote [f] are the summation from referenced AK and process knowledge (PK) documents. Currently, Hanford waste is no longer feedstock to the Supercompactor and as such only the listed hazardous waste numbers are applicable.

g. MFC/AW – F001 = 1,1,1-trichloroethane, carbon tetrachloride, methylene chloride, tetrachloroethylene, and trichloroethylene; F002 = 1,2-dichlorobenzene, 1,1,1-trichloroethane, 1,1,2-trichloro-1,2,2-trifluoroethane; 1,1,2-trichloroethane, chlorobenzene, methylene chloride; tetrachloroethylene, trichloroethylene, and trichloromonofluoromethane (trichlorofluoromethane); F004 = cresols and nitrobenzene; F005 = 2-ethoxyethanol, 2-nitropropane, benzene, carbon disulfide, isobutanol, MEK, pyridine and toluene; and F006, F007, and F009 are assigned due to electroplating waste contamination.

h. SD – F001 = carbon tetrachloride, methylene chloride, tetrachloroethylene, 1,1,1-trichloroethane, trichloroethylene, trichlorofluoromethane and 1,1,2-trichloro-1,2,2-trifluorethane; F002 = methylene chloride, tetrachloroethylene, 1,1,1-trichloroethane, trichloroethylene, trichlorofluoromethane and 1,1,2-trichloro-1,2,2-trifluorethane, chlorobenzene, 1,2-dichlorobenzene, 1,1,2-trichloroethane; F004 = cresols and nitrobenzene; F005 = benzene, carbon disulfide, isobutanol, 2-ethoxyethanol, methyl ethyl ketone, 2-nitropropane, pyridine and toluene; F006, F007 and F009 are assigned due to electroplating waste contamination.

i. LA – F001= 1,1,1-trichloroethane, 1,1,2-trichloro-1,2,2-trifluoroethane, carbon tetrachloride. methylene chloride, tetrachloroethylene, trichloroethylene, and trichlorofluoromethane; F002= 1,1,1-trichloroethane, 1,1,2-trichloro-1,2,2-trifluoroethane, chlorobenzene, methylene chloride, tetrachloroethylene, trichloroethylene, 1,1,2-trichloroethane, 1,2-dichlorobenzene and trichlorofluoromethane; F004= cresols, cresylic acid, and nitrobenzene; F005= Benzene, methyl ethyl ketone (2-butanone), pyridine, toluene, 2-ethoxyethanol, 2-nitropropane, carbon disulfide and isobutanol (isobutyl alcohol); F006, F007, F009= are assigned due to electroplating waste contamination

j. BN (product drum) – F001 = 1,1,1-trichloroethane, 1,1,2-trichloro-1,2,2-trifluoroethane, 1,1,2,2-tetrachloro-1,2-difluoroethane, carbon tetrachloride, methylene chloride, tetrachloroethylene, trichloroethylene and trichlorofluoromethane; F002 =1,1,1-trichloroethane, 1,1,2-trichloro-1,2,2-trifluoroethane; 1,1,2-trichloroethane, 1,2-dichlorobenzene, chlorobenzene, methylene chloride; tetrachloroethylene, trichloroethylene, and trichlorofluoromethane; F004 = cresols, cresylic acid, and nitrobenzene; F005 = 2-ethoxyethanol, 2-nitropropane, benzene, carbon disulfide, isobutanol, MEK, pyridine and toluene; and F006, F007, and F009 are assigned due to electroplating waste contamination.

1.7.2 Hazardous Determination

1.7.2.1 Hazardous Waste Management

The BN510.3 wastes are newly generated. Hazardous waste numbers initially (or historically) assigned to the Supercompactor feedstock wastes are applicable to the BN510.3 waste stream as a result of the RCRA mixture and the derived-from rules. [1]

1.7.2.1.1 Historical Waste Management

The wastes that comprise the BN510.3 waste stream have historically been managed as mixed TRU waste at the AMWTP. [1, 5]

1.7.2.2 Ignitability

The waste materials in this BN510.3 waste stream do not meet the 40 CFR 261.21, Characteristic of Ignitability, definition of ignitability. The resulting supercompacted debris waste is not a liquid waste and is not an ignitable waste. The current State of Idaho RCRA/HWMA Permit allows the AMWTP to process within the Supercompactor aerosol cans with less than or equal to 49 mL and excess liquids that do not exceed a maximum of 5% of the overall container capacity (volume must be confirmed by RTR). [31, 43, 59, 60, 65, 71] To render the waste acceptable at WIPP, containers identified as having ignitable waste properties or containing prohibited liquids will be:

(1) Treated using Aquaset®, Aquaset II-G®, Petroset II®, Petroset IIG®, Micro-Cel® E, PIG®, SP-400®, or Hg Absorb for mercury to make the waste amenable for offsite shipment [37, 38, 47, 48, 49, 51, 64] and/or

(2) Treated by the supercompaction process to remove the excess liquids; [31, 43, 59, 60, 65] or

(3) Undergo removal of the prohibited item(s). [9, 10, 53, 54, 60, 70]

The resulting supercompacted debris waste is not an ignitable waste. The compacted debris waste is not a liquid or a compressed gas and does not contain compressed gases. The waste does not meet the U.S. Department of Transportation definition of an oxidizer as defined in 49 CFR 173, Shippers–General Requirements for Shipments and Packagings. Finally, the waste is not capable of causing fire through friction, absorption of moisture, or spontaneous chemical change. Containers with prohibited liquids will not be shipped to WIPP. [37, 38, 47, 48, 49, 51, 64] Based on the above, this waste stream does not exhibit the characteristic of ignitability (D001).

1.7.2.3 Corrosivity

The materials in this BN510.3 waste stream do not meet the 40 CFR 261.22, Characteristic of Corrosivity, definition of corrosivity. The resulting supercompacted debris waste is not a liquid waste and is not a corrosive waste. The current State of Idaho RCRA/HWMA Permit allows the AMWTP to process within the Supercompactor aerosol cans with less than or equal to 49 mL and excess liquids that do not exceed a maximum of 5% of the overall container capacity, volume confirmed by RTR. [31, 43, 59, 60, 65, 71] To render the waste acceptable at WIPP, containers identified as having corrosive waste properties or containing prohibited liquids will be:

(1) Treated using Aquaset®, Aquaset II-G®, Petroset II®, Petroset IIG®, Micro-Cel® E, PIG®, SP-400® or Hg Absorb for mercury to make the waste amenable for offsite shipment [37, 38, 47, 48, 49, 51, 64]; and/or

(2) Treated by the supercompaction process to remove the excess liquids; [31, 43, 59, 60, 65] or

(3) Undergo removal of the prohibited item(s). [9, 10, 53, 54, 60, 70]

The resulting supercompacted debris waste is not liquid waste and will not contain liquids in excess of WIPP-WAC limits. Containers with WIPP-prohibited liquids will not be shipped. [37, 38, 41 , 47, 48, 49, 51, 64] Based on the above, this waste stream does not exhibit the characteristic of corrosivity (D002).

1.7.2.4 Reactivity

The waste materials in this BN510.3 waste stream do not meet the 40 CFR 261.23, Characteristic of Reactivity, definition of reactivity. The resulting supercompacted debris waste is not a liquid waste and is not a reactive waste. The current State of Idaho RCRA/HWMA Permit allows the AMWTP to process within the Supercompactor aerosol cans with less than or equal to 49 mL and excess liquids that do not exceed a maximum of 5% of the overall container capacity, volume confirmed by RTR. [31, 43, 59, 60, 65, 71] To render the waste acceptable at WIPP, containers identified as having reactive waste properties or containing prohibited liquids will be:

(1) Treated using Aquaset®, Aquaset II-G®, Petroset II®, Petroset IIG®, Micro-Cel® E, PIG®, SP-400® or Hg Absorb for mercury to make the waste amenable for offsite shipment [37, 38, 47, 48, 49, 51, 64]; and/or

(2) Treated by the supercompaction process to remove the excess liquids; [31, 43, 60, 65] or

(3) Undergo removal of the prohibited item(s). [9, 10, 53, 54, 60, 70]

In addition, the BN510.3 waste stream is stable and will not undergo violent chemical change, react violently with water, form potentially explosive mixtures with water, or generate toxic gases, vapors, or fumes when mixed with water. The waste does not contain sulfide waste which, when exposed to a pH between 2 and 12.5, can generate toxic gases, vapors, or fumes in a quantity sufficient to present a danger to human health or the environment. The waste is not capable of detonation or explosive reaction if subjected to a strong initiating source if heated under confinement. The waste is not readily capable of detonation or explosive decomposition or reaction at standard temperature and pressure. The materials do not contain explosive material and are not forbidden explosives or Division 1.1, 1.2, or 1.3 (Class A or B) explosives as defined in 49 CFR 173. Although the waste contains wastes that are assigned F006, F007, and F009 listed HWNs that are associated with cyanide electroplating operations, the waste when exposed to a pH between 2 and 12.5 will not generate toxic gases, vapors, or fumes in a quantity sufficient to present a danger to human health or the environment. This waste stream does not exhibit the characteristic of reactivity (D003).

1.7.2.5 BN510.3 RCRA Toxicity, Listed and Toxic Substances Control Act (TSCA) Waste

1.7.2.5.1 Toxicity

The BN510.3 supercompacted debris waste stream contains RCRA toxicity constituents associated with toxicity characteristic metals and organics. [1, 5, 6, 7, 8, 28, 39, 40, 42, 52, 58, 72, 77, 82, 84, 85, 87, 90, 91] See Table 3 for process-related activities associated with the HWNs.

Table 3 identifies the HWNs and constituents associated with this waste stream, based on AK documentation. [82, 84, 85, 87, 90, 91]

The RCRA toxicity characteristic metal HWNs D004 (arsenic), D005 (barium), D006 (cadmium), D007 (chromium), D008 (lead), D009 (mercury), D010 (selenium), and D011 (silver) were associated with AE, AW, BC, BN, LA, MD, RF, and SD feedstock for the BN510.3 waste stream.[1, 5, 6, 7, 8, 30, 52, 58, 72, 77, 82, 84, 85, 87, 90, 91] The HWNs D004, D005, D006, D007, D008, D009, D010, and D011 are assigned to the BN510.3 waste stream. [1]

The HWN D018 (benzene) was associated with LA feedstock to the BN510.3 waste stream.[82] Because F-listed HWN F005 is assigned to the feedstock for this constituent, the D018 HWN is not assigned to the BN510.3 waste stream, but rather is addressed within the F-listed waste section below. [1]

The HWN D019 (carbon tetrachloride) was associated with AE, AW, and LA feedstock to the BN510.3 waste stream. [52, 58, 82, 90] Because F-listed HWN F001 is assigned to the feedstock for this constituent, the D019 HWN is not assigned to the BN510.3 waste stream, but rather is addressed within the F-listed waste section below. [1]

The HWN D021 (chlorobenzene) was associated with LA feedstock to the BN510.3 waste stream. [82] Because F-listed HWN F002 is assigned to the feedstock for this constituent, the

D021 HWN is not assigned to the BN510.3 waste stream, but rather is addressed within the F-listed waste section below. [1]

The HWN D022 (chloroform) was associated with AW, LA, MD, RF, and SD feedstock to the BN510.3 waste stream. [6, 7, 58, 72, 77, 82, 90] The HWN D022 is assigned to the waste stream. [1]

The HWN D026 (cresol) was associated with LA feedstock to the BN510.3 waste stream.[82] Because F-listed HWN F004 is assigned to the feedstock for this constituent, the D026 HWN is not assigned to the BN510.3 waste stream, but rather is addressed within the F-listed waste section below. [1]

The HWNs D027 (1,4-dichlorobenzene); D030 (2,4–dinitrotoluene); and D037 (pentachlorophenol) were associated with AE, AW, LA, and SD feedstock to the BN510.3 waste stream. [52, 58, 72, 77, 82, 90] The HWNs D027, D030, and D037 are assigned to the waste stream. [1]

The HWNs D028 (1,2-dichloroethane) and D029 (1,1-dichloroethylene) were associated with AE, AW, LA, RF, and SD feedstock to the BN510.3 waste stream. [6, 52, 58, 72, 77, 82, 90] The HWNs D028 and D029 are assigned to the waste stream. [1]

The HWNs D032 (hexachlorobenzene) and D034 (hexachloroethane) were associated with AW and SD feedstock to the BN510.3 waste stream. [58, 72, 77, 90] The HWNs D032 and D034 are assigned to the waste stream. [1]

The HWN D033 (hexachlorobutadiene) was associated with SD feedstock to the BN510.3 waste stream. [72, 77, 90] The HWN D033 is assigned to the waste stream. [1]

The HWN D035 (methyl ethyl ketone) was associated with LA feedstock to the BN510.3 waste stream.[82] Because F-listed HWN F005 is assigned to the feedstock for this constituent, the D035 HWN is not assigned to the BN510.3 waste stream, but rather is addressed within the F-listed waste section below. [1]

The HWN D038 (pyridine) was associated with LA feedstock to the BN510.3 waste stream.[82] Because F-listed HWN F005 is assigned to the feedstock for this constituent, the D038 HWN is not assigned to the BN510.3 waste stream, but rather is addressed within the F-listed waste section below. [1]

The HWN D039 (tetrachloroethylene) was associated with AW, MD, SD, and RF feedstock to the BN510.3 waste stream. [6, 7, 58, 72, 77, 90] Because F-listed HWN F001 is assigned to the feedstock for this constituent, the D039 HWN is not assigned to the BN510.3 waste stream, but rather is addressed within the F-listed waste section below. [1]

The HWN D040 (trichloroethylene) was associated with LA feedstock to the BN510.3 waste stream. [82] Because F-listed HWNs F001 and F002 are assigned to the feedstock for this constituent, the D040 HWN is not assigned to the BN510.3 waste stream, but rather is addressed within the F-listed waste section below. [1]

The HWN D043 (vinyl chloride) was associated with AW, LA, and SD feedstock to the BN510.3 waste stream. [58, 72, 77, 82, 90] The HWN D043 is assigned to the waste stream. [1]

1.7.2.5.2 Listed Waste

F-Listed HWNs. The BN510.3 supercompacted debris waste stream contains constituents associated with RCRA-listed waste HWNs. See Table 3 for process-related activities associated with the HWNs.

The BN510.3 debris waste stream is assigned the F-listed HWNs F001, F002, F004, F005, F006, F007, and F009 based on AK documentation. These F-listed HWNs were historically assigned to feedstock to the BN510.3 waste stream. [1, 5, 6, 15, 28, 30, 39, 40, 42, 52, 58, 72, 77, 80, 82]

The HWN F001 (1,1,1- trichloroethane, 1,1,2-trichloro-1,2,2-trifluoroethane, 1,1,2,2-tetrachloro-1,2-difluoroethane, carbon tetrachloride, methylene chloride, tetrachloroethylene, trichloroethylene, and trichlorofluoromethane) was associated with previous RL feedstock to the BN510.1 and AW, BC, LA, MD, SD, and RF feedstock to the BN510.3 waste stream. [5, 6, 7, 8, 28, 39, 40, 42, 58, 72, 77, 80, 82, 84, 85, 87, 90, 91] Therefore, the HWN F001 is assigned to the waste stream. [1]

The F002 hazardous waste constituents 1,1,1-trichloroethane; 1,1,2-trichloroethane; 1,1,2-trichloro-1,2,2-trifluoroethane; 1,2-dichlorobenzene; chlorobenzene; methylene chloride; tetrachloroethylene; trichloroethylene, and trichlorofluoromethane were associated with previous RL feedstock to the BN510.1, and AE, AW, BC, LA, MD, RF, and SD feedstock to the BN510.3 waste stream. [5, 6, 7, 8, 28, 39, 40, 42, 52, 58, 72, 77, 80, 82, 84, 85, 87, 90, 91] Therefore, the HWN F002 is assigned to the waste stream. [1]

Non-halogenated F003 solvent constituents (e.g., acetone, cyclohexanone, ethyl benzene, ethyl ether, methanol, methyl isobutyl ketone, n-butyl alcohol, and xylene) are associated with the Supercompactor feedstock debris waste. The BN510.3 waste stream does not exhibit the characteristic of ignitability. Therefore, the HWN F003 is not assigned to the supercompacted debris waste stream. [1]

The HWN F004 (cresols, cresylic acid, and nitrobenzene) was associated with RL feedstock to the BN510.1 waste stream and with the AE, AW, LA, and SD feedstock to the BN510.3 waste stream. [28, 39, 40, 52, 58, 72, 77, 80, 82, 90, 91] Therefore, the HWN F004 is assigned to the waste stream. [1]

The HWN F005 (2-ethoxyethanol, 2-nitropropane, benzene, carbon disulfide, isobutanol, MEK, pyridine, and toluene) was associated with AE, AW, BC, LA, MD, RF, and SD feedstock to the BN510.3 waste stream and RL feedstock to the BN510.1 waste stream. [5, 6, 7, 8, 28, 39, 40, 42, 52, 58, 72, 77, 80, 82, 90, 91] Therefore, the HWN F005 is assigned to the waste stream. [1]

The HWNs F006, F007, and F009 were associated with AW, RF, LA, and SD feedstock, and HWNs F007 and F009 were also associated with MD feedstock to the BN510.3 waste stream. [5, 6, 7, 15, 58, 72, 77, 80, 82, 90, 91] Therefore, the HWNs F006, F007, and F009 are assigned to the waste stream. [1]

P-, U-, and K-Listed HWNs. The BN510.3 supercompacted feedstock debris wastes in this waste stream are not discarded, unused, commercial chemical products, off-specification species, or manufacturing intermediates and do not contain spill residues thereof that would meet the listing of P- or U-listed hazardous waste as identified in 40 CFR 261.33, Discarded Commercial Chemical Products, off-Specification Species, Container Residues, and Spill Residues thereof. In addition, the waste materials in this waste stream were not mixed with, or derived from, the treatment, storage, or disposal of P- or U-listed waste. As a result, P- or U-listed HWNs are not assigned to this waste stream. [1, 5, 6, 7, 8, 28, 30, 39, 40, 42, 52, 58, 72, 77, 80, 82, 84, 85, 87, 90, 91]

Although hydrofluoric acid was identified as a chemical contaminant associated with the feedstock debris waste, only spent forms of hydrofluoric acid would have contaminated the feedstock debris waste. Based on this information, the U134 HWN is not assigned to this waste stream. [1, 5, 6, 7, 8, 28, 30, 39, 40, 42, 52, 58, 72, 77, 80, 82, 84, 85, 87, 90, 91]

Based on a review of AK, it was determined that the BN510.3 waste stream will contain less than one percent beryllium by weight. Beryllium is a contaminant associated with this waste. The source of the beryllium is not associated with a powdered form and is not associated with unused commercial chemical product, an off-specification species, or a container residue, and does not contain a spill residue thereof. The P015 HWN for beryllium powder is not assigned to this waste stream. [1, 5, 6, 7, 8, 28, 30, 39, 40, 42, 52, 72, 77, 80, 82, 84, 85, 87, 90, 91]

The waste materials within this waste stream are not hazardous waste from specific sources listed in 40 CFR 261.32, Hazardous Wastes from Specific Sources, (i.e., K-listed hazardous waste) and they have not been mixed with; derived from the treatment, storage, or disposal of K-listed wastes; and do not contain spill residues thereof. The waste materials in this waste stream are not assigned K-listed HWNs. [1, 5, 6, 7, 8, 28, 39, 40, 42, 52, 58, 72, 77, 80, 82, 84, 85, 87, 90, 91]

1.7.2.5.3 TSCA Waste

Polychlorinated biphenyl items with PCB concentrations equal to or exceeding 50 parts per million are not expected in the BN510.3 waste stream. Drums of PCB-contaminated Rocky Flats organic sludges are expected in the SD boxed debris waste. [6, 7, 8, 28, 30, 39, 42, 52, 72, 77, 80, 82, 84, 85, 87, 90, 91]

Drums of supercompacted feedstock debris waste identified during RTR/VE as containing PCB wastes may be placed into the box lines or may be segregated or sent to DWPG or SCW for item removal. [1, 9, 16, 29, 30, 54] PCB items and drums of PCB wastes identified in boxed debris are removed during box line operations. Potential PCB contaminated waste identified during box line repackaging is subject to AMWTP PCB cleanup requirements. [53]

PCB items removed from approved feedstock debris waste drums and boxes, drums of PCB sludges and/or soils, and potential PCB cleanup wastes are removed from the WMF-676 box lines and packaged as newly-generated waste. PCB items and sludge/soil waste are not authorized as feedstock debris waste.[77, 80, 90, 91]

Asbestos has been identified in some of the approved feedstock debris waste. Any containers identified as containing regulated types or quantities (e.g., greater than 1% of friable asbestos) will be labeled, as required, in accordance with TSCA and Occupational Safety and Health Administration regulations.

1.7.2.5.4 Other Applicable Waste Streams

The AMWTP BN510, BN510.1, and BN510.2 waste streams are pertinent to the BN510.3 waste stream. [30, 77, 80, 90, 91]

The EPA HWNs assigned to the BN510 waste stream included D004 through D011, D022, D028, D029, F001, F002, F005, F006, F007, and F009. [30]

The EPA HWNs assigned to BN510.1 include D004 through D011, D022, D027, D028, D029, D030, D034, D037, D043, F001, F002, F004, F005, F006, F007, and F009. [80, 91]

The EPA HWNs assigned to BN510.2 include D004 through D011, D022, D027, D028, D029, D030, D032, D034, D037, D043, F001, F002, F004, F005, F006, F007, and F009. [77]

The EPA HWNs assigned to BN510.3 include D004 through D011, D022, D027, D028, D029, D030, D032, D033, D034, D037, D043, F001, F002, F004, F005, F006, F007, and F009. [90]

1.8 Radionuclides

The radionuclides of concern for BN510.3 are ^{238}Pu, ^{239}Pu, ^{240}Pu, ^{242}Pu, ^{233}U, ^{234}U, ^{238}U, and ^{241}Am. The remaining WIPP-tracked radionuclides, ^{137}Cs and ^{90}Sr, are not expected to be present in measurable quantities in feedstock debris waste from RF except for IDC RF-480, due to disposal of isotopic sealed source material. Cesium-137 and computed ^{90}Sr are anticipated radionuclides for IDC RF-480 feedstock and may be detected during non-destructive assay (NDA). Cesium-137 and ^{90}Sr were identified as potentially present in AE, MD, BC, LA, SD, and AW debris waste. [6, 7, 8, 13, 50, 52, 58, 72, 82]

At a minimum, the ratios of the two most prevalent radionuclides in the isotopic mix are compared to confirm existing AK data in compliance with CH-WAC requirements. The two most prevalent radionuclides expected in the waste stream are ^{239}Pu and ^{240}Pu. This is based on a review of product drums included in the BN510.1 waste stream; however, the prevalent radioisotopes in some containers of the waste may be a combination of ^{239}Pu and a different second TRU or uranium isotope, due to commingling of wastes.

Table 4 identifies the predominant radionuclides and the principle source of those radionuclides for each of the original generators and for the BN510.3 wastes. [6, 7, 8, 13, 50, 52, 58, 72] For waste containers that have multiple generators and therefore a mixture of weapons grade plutonium (WG Pu), enriched uranium (EU), depleted uranium (DU), heat source isotopes, and fuel grade plutonium, a combination of any two of the common isotopes identified may be detected as the most prevalent. Although the waste stream contains depleted uranium in the feedstock material, the weight of uranium within the overall feedstock material will be less than 1% by weight. Radioassay data are reviewed and assessed by AMWTP NDA personnel as described in the RPT-TRUW-03, Drum Assay Technical Review Report. [14]

The radioisotopic content for each AMWTP supercompacted debris waste 100-gallon product drum will be calculated based on the aggregate of the NDA results for each of the compacted feedstock debris waste drums contained therein. The POS is used to ensure that each payload container does not exceed WAC weight or dose limits and complies with the required TRU activity (greater than 100 nCi/g). The direct feed 55-gallon drums will contain at least one TRU radionuclide greater than the lower limit of detection (LLD). The 100-gallon product drums that contain puck(s) with TRU radionuclides at less than LLD from the box line feed, as determined by 55-gallon drum assay, are assayed using the Super HENC (high energy neutron counter) for final TRU determination.

Table 4. Predominant radionuclides expected in debris wastes by generator site. [6, 7, 8, 13, 50, 52, 58, 72, 82]

Generator Site	Principal Plutonium Source	Predominant Radionuclides by Activity
RF	WG	^{239}Pu, ^{240}Pu
RF	WG, DU, EU	^{239}Pu (^{235}U or ^{238}U)
MD	WG	^{239}Pu, ^{240}Pu
MD	Heat source	^{238}Pu, ^{239}Pu
BC	WG	^{239}Pu, ^{240}Pu
AE	Combination WG Pu, fuels-grade Pu	^{241}Pu, ^{239}Pu
AW	Combination WG Pu, fuels-grade Pu	^{241}Am, ^{241}Pu
SD	Combination WG Pu, heat source Pu, uranium, thorium, fuels-grade Pu, DU, EU	^{241}Am, ^{241}Pu
LA	Combination WG Pu, heat source Pu, fuels-grade Pu, reactor-grade Pu, enriched ^{242}Pu	^{241}Pu, ^{238}Pu
BN	WG (RF waste)	^{239}Pu, ^{240}Pu
BN	Combination WG Pu, heat source Pu	^{238}Pu, ^{239}Pu
BN	Combination WG Pu, heat source Pu, uranium, thorium, fuels-grade Pu	^{239}Pu (^{240} Pu, ^{241}Pu, ^{238}Pu, ^{241}Am, ^{235}U or ^{238}U)

2.0 SHIPPING CONSIDERATIONS

2.1 Waste Packaging

2.1.1 Direct-Load of 100-gallon Supercompacted Debris Waste Containers Into TRUPACTs

The BN510.3 waste stream consists of supercompacted drums of debris waste (pucks) placed directly into 100-gallon product drums. There are no inner packagings or layers of confinement associated with the 100-gallon product drums. There is a filtered lid on the 100-gallon drums. If 100-gallon drums become damaged, they are packaged into SWBs for shipment to WIPP. [9, 17, 70]

2.2 Flammability Consideration

The payload containers in the BN510.3 waste stream must comply with the Contact-Handled Transuranic Waste Authorized Methods for Payload Control (CH-TRAMPAC) requirements. As specified in the CH-TRAMPAC, a determination of compliance with the flammable gas limits will be performed for volatile organic compounds (VOCs), hydrogen, and methane. Headspace gas (HSG) sampling and analysis is performed when required by the WIPP-Waste Acceptance Plan and/or CH-TRAMPAC. At a minimum, the HSG analytical results are evaluated to determine the total concentration of flammable VOCs present in the waste. Payload containers, including those with HSG results exceeding 500 parts per million flammable VOCs, are evaluated for compliance with applicable CH-TRAMPAC requirements prior to shipment. Payloads containing flammable VOCs are managed in accordance with CCP-PO-003, CCP Transuranic Authorized Methods for Payload Control (CCP CH-TRAMPAC). [25]

3.0 REFERENCES

NOTE: *Advanced Mixed Waste Treatment Project documents such as procedures, AK reports, and operating instructions, are cited without revision numbers or dates. The most recent revisions of these documents are available through the AMWTP Electronic Document Management System (EDMS). Previous revisions are available on EDMS.*

1. RPT-TRUW-12, AMWTP Waste Stream Designations, current revision
2. DOE/WIPP 01-3194, CH-TRU Waste Content Codes (CH-TRUCON)
3. DOE/LLW-217, DOE Waste Treatability Group Guidance, 1995 [P670A]
4. MP-TRUW-8.1, Certification Plan for INL Transuranic Waste, current revision
5. RPT-TRUW-06, Acceptable Knowledge Document for AMWTP Waste, current revision

6. RPT-TRUW-56, Acceptable Knowledge Document for INL Stored Transuranic Waste – Rocky Flats Plant, current revision

7. RPT-TRUW-13, Acceptable Knowledge Document for INL Stored Transuranic Waste – Mound Plant Waste, current revision

8. RPT-TRUW-04, Acceptable Knowledge Document for the Battelle Columbus Laboratories Building JN-4 Plutonium Laboratory, current revision

9. INST-FOI-20, Supercompactor and Post-Compaction Operations, current revision

10. INST-FOI-17, Facility Visual Examination Operations, current revision

11. DOE/WIPP-02-3122, Transuranic Waste Acceptance Criteria for the Waste Isolation Pilot Plant [P2003A]

12. MP-TRUW-8.13, Collection, Review, and Management of Acceptable Knowledge Documentation, current revision

13. RPT-TRUW-07, Determination of Radioisotopic Content in TRU Waste Based on Acceptable Knowledge, current revision

14. RPT-TRUW-03, Drum Assay Technical Review Report, current revision

15. Rocky Flats Environmental Technology Site Backlog Waste Reassessment Baseline Book, May 5, 1994-March 5 2001 [P052A]

16. Summary of PCB AK Sources, Wastren, Inc., September 5, 2001. [C207A]

17. INST-OI-24, Packaging Radioactive Waste, current revision

18. Correspondence from DOE Carlsbad Area Office to J.M. Roberson, RFFO, and J.M. Wilcynski, INEEL, Identification of Defense Waste Streams Generated at Rocky Flats Environmental Technology Site (RFETS), May 20, 1997 [C191A]

19. Operable Unit 9 Site Scoping Report: Volume 7 – Waste Management, February 1993 [P380A]

20. Interview of J.B. Williamson, BCL, regarding Historical Operations Conducted in JN-4, September 2000 [C258A]

21. Interview of David Freas, BCL, regarding Historical Operations in Building JN-4, September 2000 [C259A]

22. Interview of William Pardue, BCL, regarding Historical Operations in Building JN-4, October 2000 [C260A]

23. DOE, Interim Guidance on Ensuring that Waste Qualifies for Disposal at the Waste Isolation Pilot Plant, 1997 [P203A]

24. Correspondence from Frank Marcinowski to EM-13 (Stan Wolf, 301-903-7962), Process for TRU Waste Defense Determination, February 2005 [C329A]

25. CCP-PO-003, CCP Transuranic Authorized Methods for Payload Control (CCP CH-TRAMPAC), Central Characterization Project [P672A]

26. MP-TRUW-8.2, Quality Assurance Project Plan, current revision

27. DOE/TRU-13-3425, Annual Transuranic Waste Inventory Report - 2013 [P2023A]

28. RPT-TRUW-82, Acceptable Knowledge Document for Hanford Debris Waste Shipped to AMWTP

29. INST-FOI-23, Special Case Waste Operations, current revision

30. RPT-TRUW-30, Acceptable Knowledge Summary for Supercompacted Debris Waste (BN510) [P439A]

31. INST-OI-12, Real-Time Radiography Examinations (Certification Scans), current revision

32. INST-OI-34, Non-Facility Visual Examination Operations, current revision

33. INST-FOI-01, In-Plant Drum Assay Operations, current revision

34. INST-OI-14, Drum Assay Operations, current revision

35. RPT-TRUW-05, Waste Matrix Code Reference Manual, current revision

36. Correspondence from the EPA to Donald C. Cadbury, National TRU Program CBFO, June 10, 2010 [C869S]

37. Material Safety Data Sheet, Micro-Cel®E, Celite Corporation, January 17, 2007 [P808S]

38. Material Safety Data Sheets, Aquaset® (sodium montmorillonite) and Aquaset II-G® (sepiolite), Fluid Tech, January 1, 2005, and November 11, 2008 [P881S]

39. CCP-PK-RL-101, Central Characterization Project Process Knowledge Summary Report for Hanford Plutonium Finishing Plant Contact-Handled Transuranic Debris Waste, 85-Gallon Overpacked Drums, Waste Stream MPFPDD, Rev. 2, June 4, 2010 [P853A]

40. CCP-PK-RL-102, Central Characterization Project Process Knowledge Summary Report For The Hanford 325 Building Radiochemical Processing Laboratory Contact-Handled Transuranic Debris Waste, 85-Gallon Overpacked Drums, Waste Stream RLM325D.001, Rev. 2, June 4, 2010 [P854A]

41. DOE M 435.1, DOE Radioactive Waste Management Manual [P1183A]

42. CCP-PK-RL-103, Central Characterization Project Process Knowledge Summary Report For Hanford 231-Z building Contact Handled Transuranic Debris Waste, 85-Gallon Overpacked Drums, Waste Stream RLM231ZD.001, Rev. 2, June 4, 2010 [P855A]

43. ID489008952, AMWTP HWMA/RCRA Permit and interim status documents

44. Resource Conservation and Recovery Act, 40 CFR Parts 260 through 280

45. TV-009-13, Memorandum to File, Updated Waste Material Parameter Weight per Unit of Waste Calculations for the BN510.3 Supercompacted Debris Waste Stream, September 30, 2013. [C1325A]

46. Nuclear Waste Policy Act of 1982, 1982 [P757A]

47. Material Safety Data Sheets for Universal PIG® Absorbents (MSD-014) New Pig Corp., October 10, 2011 [P1376S]

48. Material Safety Data Sheets for Oil-Only PIG® Absorbents (MSD-016) New Pig Corp., August 3, 2011 [P1377S]

49. Material Safety Data Sheets for BLUE PIG® Sock Absorbents (MSD-029) New Pig Corp., February 9, 2011 [P1378S]

50. Box 10130773 and NCR# 72914, AMWTP, October 3, 2012 [C1066S]

51. Material Safety Data Sheets for Water Works SP-400 Absorbent (MSDS-1252), Water Works America Inc., August 23, 2012 [P1432S]

52. RPT-TRUW-89, Acceptable Knowledge Document for Argonne National Laboratory-East Waste, current revision

53. RPT-ESH-079, Advanced Mixed Waste Treatment Facility Box Line PCB Management Plan, current revision [P1827A]

54. INST-FOI-28, Cleaning and Packaging of Dust/Debris/Material from 1st Floor Cells in WMF-676, current revision

55. INST-FOI-37, Box Line Quarterly Cleanout, current revision

56. INST-OI-09, Retrieval Inspection Station Operations, current revision

57. MP-TRUW-8.45, Virtual Overpack Process and Planning, current revision

58. RPT-TRUW-79, Acceptable Knowledge Document for Materials and Fuels Complex Waste, current revision

59. EDF-0783, Deflagration Analysis of Aerosol Can Propellant in the Supercompactor Glovebox. [P1829A]

60. INST-TRUW-8.13.1, TRU Programs Site Project Office Process, current revision

61. Advanced Mixed Waste Treatment Project Defense Determination Evaluation for Argonne National Laboratory-East Debris Wastes Proposed for Inclusion into the Supercompactor Feedstock (i.e., BN-508) – TV-003-13 [C1277A]

62. Revised Advanced Mixed Waste Treatment Project Defense Determination Evaluation for Materials and Fuels Complex Debris Wastes Proposed for Inclusion into the Supercompactor Feedstock (i.e., BN-508) – TV-002-13 [C1276A]

63. Public Law 102-579, WIPP Land Withdrawal Act, U.S. Congress, October 1992 [P1674A]

64. Material Safety Data Sheet for Hg Absorb® (MSDS-560) Lab Safety Supply, Inc., May 19, 2001 [P1398S]

65. RPT-82, Supercompactor Liquid Treatment Capabilities, Evaluation and Conclusion [P859S]

66. EPA Docket No. A-98-49: II-A4-169, Waste Characterization Tier 1 Change Report, Addition of Contact-Handled Transuranic Waste to The Advanced Mixed Waste Treatment Project Approved Program: S3000 and S5000 Waste From Argonne National Laboratory-East and S5000 Waste from Idaho National Laboratory Materials And Fuels Complex, U.S. EPA, January 20, 2013 [C1284A]

67. INST-OI-15, Box Assay Operations, current revision [P1857S]

68. INST FOI 32, Size Reduction of Large Items, current revision

69. INST-OI-65, Standard Waste Box Direct Loading, current revision [P1850S]

70. INST-FOI-16, Box line Operations, current revision

71. LST-EC&P-11, AMWTP HWMA/RCRA Permit WMF-676 Waste Management Criteria, current revision

72. RPT-TRUW-91, Acceptable Knowledge Document for Pre-1980 INL-Exhumed SDA Waste, current revision

73. EPA Docket No. A-98-49; II-A4-174, Waste characterization Tier 1 Change Report: Addition Of Contact-Handled Transuranic Waste To The Advanced Mixed Waste Treatment Project Approved Program: Pre-1980 INL-Exhumed Subsurface Disposal Area Summary Category Group S3000 And S5000 Waste, United States Environmental Protection Agency, May 01, 2013. [C1306A]

74. EPA Tier approval letter for RPT-TRUW-91 SDA, United States Environmental Protection Agency, July 9, 2013 [C1307A]

75. INST-FOI-21, Drummed Waste Handling Operations, current revision

76. Defense/Non-Defense and Waste Isolation Pilot Plant Land Withdrawal Act Evaluation for Pre-1980 Idaho National Land Exhumed Subsurface Disposal Area Wastes, AMWTP, July 13, 2013 [C1310A]

77. RPT-TRUW-83, Acceptable Knowledge Summary for Supercompacted Debris Waste, Rev. 6, September 9, 2013 [P1996A]

78. TV-008-13, Memorandum to File, Waste Volume Estimates BN510.3 Supercompacted Debris Waste Stream, September 30, 2013 [C1329S]

79. E-mail correspondence from AMWTP Production Planning (available in EDMS), September 19, 2013 [C1328S]

80. RPT-TRUW-83, Acceptable Knowledge Summary for Supercompacted Debris Waste (BN510.1), Rev. 0, September 10, 2010 [P2010A]

81. CCP-AK-INL-001, Central Characterization Program, Acceptable Knowledge Summary Report for Waste Retrieved from Designated Areas Within the Subsurface Disposal Area at the Idaho National Laboratory

82. RPT-TRUW-93, Acceptable Knowledge Documents for Los Alamos National Laboratory Debris, current revision.

83. TV-010-13, Memo to file, Defense/non-defense and WIPP Land Withdrawal Act Evaluation for Los Alamos National Laboratory (LANL) debris wastes, AMWTP, October 16, 2013.[C1313A]

84. Form-1900, AMWTP Offsite Waste Stream Profile Form for LANL LA-MHD04.001, AMWTP, September 12, 2013. [P1999A]

85. Form-1900, AMWTP Offsite Waste Stream Profile Form for LANL LA-MHD09.001, September 12, 2013. [P2001A]

86. Discrepancy resolution for EDF-0783 and EDF-0768, AMWTP, February 28, 2013. [D109A]

87. Form-1900, AMWTP Offsite Waste Stream Profile Form for LANL LA-MHD01.001, AMWTP, September 12, 2013. [P1998A]

88. JAV-001-13, BN510.3 waste volume estimates for LANL inclusion into the Supercompacted Debris Waste Stream, AMWTP, December 2, 2013.[C1323A]

89. EPA Tier 1 approval letter for LANL debris waste as supercompactor feedstock, EPA, September 16, 2013. [C1327A]

90. RPT-TRUW-83, Acceptable Knowledge Summary for Supercompacted Debris Waste, Rev. 7, December 3, 2013 [P2008A]

91. RPT-TRUW-83, Acceptable Knowledge Summary for Supercompacted Debris Waste (BN510.1), Rev. 0, September 10, 2010, and Rev. 3, February 7, 2013.[P2010A]

92. TV-012-13, Waste material parameter evaluation for inclusion of LANL debris into the BN510.3 Supercompacted Debris Waste Stream, AMWTP, December 2, 2013. [C1334A]

Appendix A – Approved Feedstock Debris Waste by Original Generator and IDC

The following table lists the approved feedstock debris waste by original generator and IDC. (30, 77, 80, 90, 91)

Waste Type	Site	IDC	Description
COMBUSTIBLES	RF	010	Paper and Rags
	RF	020	Wood and Benelex
	RF	030	Plastic
	RF	040	Rubber
	RF	33A	WIPP Experimental Test Program (WETP) Bin Program-Combustibles A (IDCs 335, 336, 337, and 339)
	RF	33B	WETP Bin Program – Combustibles B (IDCs 330, 337, and 339)
	RF	302	Benelex® and Plexiglas®
	RF	330	Paper and Rags-Dry
	RF	336	Paper and Rags-Moist
	RF	337	Plastic, Teflon®, Washables, PVC
	RF	339	Leaded Rubber Gloves and Aprons
	RF	430	Unleached Ion Column Resin
	RF	431	Leached Resin
	RF	460	Washables, Rubber, Plastic
	RF	463	Leaded Rubber Gloves and Aprons
	RF	464	Benelex® and Plexiglas®
	RF	833	Plastics, TRU Mixed
	RF	831	Dry Combustibles
	RF	832	Wet Combustibles
	RF	900	Low Specific Activity (LSA) Paper, Plastics, etc.
	RF	970	Wood

Waste Type	Site	IDC	Description
FILTERS	RF	328	Ful-Flo® Incinerator Filters
	RF	335	Absolute 8 × 8 Filters
	RF	338	Insulation and Chemical Warfare Service (CWS) Filter Media
	RF	360	Insulation
	RF	376	Cemented Insulation and Filter Media
	RF	490	High-Efficiency Particulate Air Filters and CWS Filters
	RF	491	Plenum Prefilters
GRAPHITE	RF	070	Graphite
	RF	300	Graphite Molds
	RF	301	Graphite Cores
	RF	303	Scarfed Graphite Chunks
	RF	310	Graphite Scarfings
	RF	312	Coarse Graphite

Waste Type	Site	IDC	Description
HETEROGENEOUS	AE	100	General Plant Waste
	AE	101	Cut up Gloveboxes
	AE	104	Alpha Hot Cell Waste
	AE	106	Special Source Material
	AE	110	Research Generated Waste
	AE	120	D and D Waste Compactable and Combustible Solids
	AW	150	Laboratory Waste
	AW	160	AL/CL Debris Waste
	AW	161	ACL Glassware, Paper, Poly, and Misc.
	AW	162	ANL-W FMF EFL Zr-U-Pu Fuel Cast
	AW	163	ANL-W ACL Cold-Line Ab. Liq. and Debris
	AW	164	ANL-W HRA/WCA Debris
	AW	165	Ash Stabilization and GGE Debris
	AW	167	MFC CH-TRU Heterogeneous Debris
	BC	201	Noncombustible Solids
	BC	202	Combustible Solids-Paper/Cloth
	BN	508	AMWTP Newly Generated Debris
	BN	510	Supercompacted Debris
	BN	550	Supercompacted Debris (BN510.1)
	LA	007	Mixed Heterogeneous Debris from TA-55
	LA	009	Heterogeneous Debris from the TA-21 DP West Facility
	LA	010	Heterogeneous Debris Waste from TA-50
	MD	801	Rags, Paper, Wood, etc.
	MD	802	Dry Box Gloves and O-Rings
	MD	803	Metal, Equipment, Pipe, Valves, etc.
	MD	804	Plastic, Tygon®, Mani-Boots, etc.
	MD	805	Asbestos Filters
	MD	810	Glass, Flasks, Sample Vials, etc.
	MD	813	Glass Filters and Fiberglass
	MD	814	Graphite Waste
	MD	824	Equipment Boxes, Noncombustible
	MD	825	Equipment Drums, Noncombustible

Waste Type	Site	IDC	Description
	MD	826	Equipment Boxes, Combustible
	MD	827	Equipment Drums, Combustible
	MD	838	<10 nCi/g Non-combustible
	MD	847	LSA <100 nCi/g Combustible
	MD	848	LSA <100 nCi/g Noncombustible
	RF	241	Americium Process Residue
	RF	372	Grit
	RF	374	Blacktop, Concrete, Dirt, and Sand
	RF	750	Pits 11 and 12 Debris
	RF	760	Pad 1 Cells 1 and 2 RF Debris
	RF	950	LSA Metal, Glass, etc.
	RF	960	Concrete, Asphalt, etc.
	SD	177	Pre-1980 INL-Exhumed SDA Heterogeneous Debris

Waste Type	Site	IDC	Description
INORGANIC NON-METAL	RF	060	Glass
	RF	440	Glass
	RF	441	Raschig Rings, Unleached
	RF	442	Raschig Rings, Leached
	RF	44A	WETP Bin Program – Glass (IDCs 440 and 442)
	RF	368	Magnesium Oxide Crucibles
	RF	370	LECO Crucibles
	RF	371	Fire Brick
	RF	377	Coarse Fire Brick
	RF	391	Crucibles and Sand
	RF	392	Sand, Slag, and Crucible
LEAD/CADMIUM METAL	RF	488	Glovebox Parts w/Lead
UNCATEGORIZED METAL	RF	050	Metal Scrap
	RF	48A	WETP Bin Program – Metals (IDCs 480 and 481)
	RF	320	Heavy Non-special Source Metal
	RF	321	Lead
	RF	416	Zinc Magnesium Alloy Metals
	RF	480	Scrap Metal (Non SS)
	RF	481	Leached Metals (Non SS)

AK2

AMWTP
Advanced Mixed Waste Treatment Project

RPT-TRUW-59, Rev. 4

Acceptable Knowledge Summary for Special Setups Waste (BN004)

Advanced Mixed Waste Treatment Project

(Signature on file. See DCR-11340.)
Susan Peterman
TRU Programs Manager

06/27/12
Date

CONTENTS

ACRONYMS AND ABBREVIATIONS iv

1.0 WASTE STREAM DESCRIPTION 1

1.1 Waste Stream Number 1

1.2 Basic Waste Stream Information 1

1.3 Waste Stream Description 3

1.4 Process Description 4

1.5 Prohibited Items 7

1.6 Resource Conservation and Recovery Act Determination 8

1.7 Radionuclides 12

2.0 SHIPPING CONSIDERATIONS 12

2.1 Waste Packaging 12

2.2 Flammability Consideration 13

3.0 REFERENCES 14

TABLES

Table 1-1. Physical waste form description for special setups waste. 3

Table 1-2. Wastes treated in the solidification process 5

Table 1-3. Estimated waste material parameter weights per unit of waste for Special Setups Waste (BN004). 7

ACRONYMS AND ABBREVIATIONS

AK	acceptable knowledge
AMWTP	Advanced Mixed Waste Treatment Project
ATWIR	Annual Transuranic Waste Inventory Report
CCP	Central Characterization Project
CFR	Code of Federal Regulations
CH-TRAMPAC	Contact Handled Transuranic Waste Authorized Methods for Payload Control
CH-TRUCON	CH-TRU Waste Content Codes
DOE	Department of Energy
ECM	Electrochemical Milling
EDL	economic discard limit
EDMS	Electronic Document Management System
EDTA	Ethylenediaminetetraacetic acid
EPA	Environmental Protection Agency
HF	hydrofluoric acid
HSG	headspace gas
HWN	hazardous waste number
IDC	item description code
INEEL	Idaho National Engineering and Environmental Laboratory (now INL)
INEL	Idaho National Engineering Laboratory (now INL)
INL	Idaho National Laboratory
nCi/g	nanocuries per gram
NDA	non-destructive assay
PCB	polychlorinated biphenyl
ppm	parts per million
PRQL	program required quantitation limit
RF	Rocky Flats
RFETS	Rocky Flats Environmental Technology Site
RTR	real-time radiography
SDA	Subsurface Disposal Area
TSA-RE	Transuranic Storage Area-Retrieval Enclosure
TWBIR	Transuranic Waste Baseline Inventory Report
UCL_{90}	90% upper confidence limit
VE	Visual Examination
VOCs	Volatile Organic Compounds

WAC	Waste Acceptance Criteria
WAP	Waste Analysis Plan (Attachment B of the WIPP Hazardous Waste Permit)
WIPP	Waste Isolation Pilot Plant
WMP	Waste material parameter
WMC	Waste Matrix Code
WTS	Waste Tracking System

1.0 WASTE STREAM DESCRIPTION

1.1 Waste Stream Number

BN004[1]

1.2 Basic Waste Stream Information

1.2.1 Waste Stream Name

Special Setups Waste[1]

1.2.2 Point of Generation

Rocky Flats (RF) Plant, Building 774[2]

1.2.3 Waste Stream Volume

2,302 55-gallon containers (480 m^3) – current volume[3]

The estimated percentages of transuranic (TRU) activity for special setups waste are 70% greater than 100 nanocuries per gram (nCi/g) and 30% less than 100 nCi/g.

Advanced Mixed Waste Treatment Project (AMWTP) will employ payload management practices in accordance with the Waste Acceptance Criteria (WAC) for waste stream BN004.[7]

1.2.4 Generation Dates

AMWTP stored containers of RF special setups waste generated from 1968 to 1988.[66] Waste stored at AMWTP with generation dates (i.e., pack date) later than 1988 are the result of repackaging (e.g., waste characterization activities).

1.2.5 TRUCON Codes

ID111/ID211[1, 4]

1.2.6 Waste Isolation Pilot Plant (WIPP) Waste Stream ID

Annual Transuranic Waste Inventory Report (ATWIR) Waste Stream ID: IN-BN004 (formerly identified as WIPP Identification Number Transuranic Waste Baseline Inventory Report [TWBIR] Waste Stream ID: IN-W157.144)[5, 67]

1.2.7 Summary Category Group

S3000 Homogenous Solids[1, 6]

1.2.8 Waste Matrix Code Group

Solidified Inorganics

1.2.9 Waste Matrix Codes

S3150 –Solidified Homogeneous Solids

Special setups waste consists of >50% by volume solidified waste form. Specifically, small quantities of liquids were solidified in large quantities of cement as special setups waste. Small quantities of absorbents (Oil-Dri® or vermiculite) were also added. This waste is at least 50% (by volume) inorganic solids and is classified as a homogeneous waste.[36]

1.2.10 Descriptions from the TWBIR and ATWIR

TWBIR waste stream description:

This waste, generated at RF, consists of liquids absorbed on a cement mixture. The liquid wastes were not compatible with aqueous treatment processes and are handled separately due to their plutonium complexing nature.[5]

ATWIR waste stream description:

IN-BN004 (Special Setups) waste was generated from a waste treatment process (predominately laboratory waste) generated in support of plutonium operations at the Rocky Flats Environmental Technology Site (RFETS). Resins and electrochemical milling (ECM) sludges were also solidified with the liquid waste. This waste stream is comprised of solidified waste assigned item description code (IDC) ID-RF-004 and ID-RF-802. Special setups consists of waste >50% by volume inorganic solidified waste. Specifically, small quantities of liquids solidified in large quantities of cement.[a] [67]

1.2.11 Defense Determination

The special setups wastes (BN004) generated at RF and shipped to the Idaho National Laboratory (INL) were generated exclusively through defense program activities. Liquid wastes that were subsequently solidified as special setups waste addressed by this summary were generated from defense related activities (e.g., weapons production and plutonium recovery activities) or from one of the four activities identified in the 1997 Department of Energy (DOE) Carlsbad Area Office (CAO) memorandum[10] as non-defense waste that was inadvertently mixed in the past and from which the non-defense portion cannot be segregated.

---

a. The description in the ATWIR will be revised in the next annual update to add IDC RF 744 and revise the waste stream description to "IN-BN004 (Special Setups) waste was generated from treating wastes (predominately laboratory waste) generated in support of plutonium operations at Rocky Flats. Resins and electrochemical milling sludges were also solidified with the liquid waste. This waste stream is comprised of solidified waste assigned IDC ID-RF-004, ID-RF-744 and ID-RF-802."

In accordance with interim guidance, defense wastes are identified as those wastes generated during work involving only defense activities or during work in which defense and non-defense wastes were inadvertently mixed in the past and from which the non defense portion cannot be segregated. The TRU wastes shipped to the INL covered by the BN004 waste stream profile (WSP) meet this definition.[60]

1.3 Waste Stream Description

1.3.1 Description

Special setups waste was generated from a waste treatment process that solidified process waste (predominantly laboratory liquid waste) generated in support of plutonium operations at RF. Resins and ECM sludges were also solidified with the liquid waste. This waste stream is comprised of solidified waste assigned IDCs RF 004, RF 744, and RF 802. The waste was generated in Building 774. The Special Setups waste is similar in material, physical form, and hazardous constituents and is a single waste stream. The TWBIR number, IDC, waste matrix code (WMC), and waste descriptions for the special setups waste stream are presented in Table 1-1.

Table 1-1. Physical waste form description for special setups waste.

IDC	WMC	Description
RF 004	S3150	Special Setups Waste
RF 744	S3150	Pits 11 and 12 Special Setups
RF 802	S3150	Solidified Laboratory Waste

Special Setups Waste – Building 774 (RF 004). This waste consists of liquids primarily from laboratory operations throughout the plant site that were neutralized, if required, and solidified in Building 774. A mixture of Portland cement and insulation cement (magnesia cement) was placed in a lined 55-gallon drum and identified with container prefix 744. The liquid was neutralized, if required, and then added to the cement mixture. Some drums may contain polyethylene bottles (<4 liters) of solidified waste.[19, 21]

Pits 11 and 12 Special Setups (RF 744). RF 744 was assigned by AMWTP to special setups containers retrieved from Subsurface Disposal Area (SDA) Pits 11 and 12 and identified with container prefix 744. The process and inputs were the same as waste containers identified as RF 004. The retrieved waste containers were originally generated prior to 1972, shipped to INL and buried in Pits 11 and 12. The waste containers were subsequently retrieved from the pits prior to 1979 and placed in the Transuranic Storage Area-Retrieval Enclosure (TSA-RE).[3]

Solidified Laboratory Waste – Building 774 (RF 802). RF 802 replaced RF 004 in approximately 1986.[43] RF changed the IDC, but the process and inputs remained the same.[11]

1.4 Process Description

1.4.1 Areas of Operation

The waste was generated in Building 774 by solidifying waste generated from various locations at RF.[13, 16, 23, 24, 40]

1.4.2 Process Flow Diagrams

The process flow diagram for the solidification of liquid waste as special setups waste is provided in the archived RF information, Waste Stream Residue Identification and Characterization (WSRIC) Building 774.[30]

1.4.3 Waste Generating Processes

The special setups waste treatment process solidified process waste (predominantly laboratory liquid waste that was not compatible with the primary aqueous waste treatment system). The liquids include complexing agents (e.g., Versene [ethylene diaminetetraacetic acid], tetraphosphoric acid, tributyl phosphate, citrate, oxalic acid, sodium lignosulfonate, and americium oxalate), strong acids, and strong bases. The special setups waste treatment process also solidified solids such as ECM sludges or resins. These wastes were generated primarily from the analytical laboratories, research and development laboratories, and maintenance shops located in Buildings 122, 123, 126, 371, 444, 559, 705, 707, 750, 771, 777, 779, 865, 881, 883, 886, and 991.[2, 4, 12, 14, 16, 21, 30, 31, 34, 39, 42, 44]

If the liquids generated in the analytical laboratories in Buildings 371, 559, and 771 contained plutonium above the economic discard limit (EDL), the liquids were sent to Building 771 for recovery prior to the transfer of the liquid waste to Building 774 for solidification.[27]

The bulk of the waste was packaged in small containers (typically plastic bottles) or in drums at the point of origin and transferred to Building 774; however, some of the liquid waste was received by pipeline transfers from Building 771. A setup logbook was used in Building 774 to record the types of waste and generation source. The date of treatment, generation location, waste description, and treatment process were entered in the logbook.[39, 48] The bulk of the liquid waste treated in the special setups process was laboratory waste, acids, and bases; however, other liquids (e.g., coolants, oils) were also solidified in Building 774. Therefore, individual containers in this waste stream may have limited amounts of organics (less than 10 liters). Containers of 50% or greater solidified organic waste are not included in this waste stream.

1.4.3.1 Neutralization and Solidification

In Building 774, the packaged waste received in plastic bottles was placed into a glovebox. Any acid waste was transferred from the glovebox into Tank T-7 located adjacent to the glovebox and neutralized with sodium hydroxide. After sodium hydroxide was added to

Tank T-7, pH paper was used to ensure the acid waste had been neutralized. Basic liquid wastes were not neutralized prior to solidification.[28, 48]

A mixture of approximately 250–300 pounds of Portland Type I/II cement and 100-150 pounds of insulation cement (magnesia cement) was placed in a lined 55-gallon drum, and the drum was placed on a drum roller to ensure mixing of the contents. The drum was then attached to the glovebox.[29, 48] Approximately 80–100 liters of the basic or neutralized liquid waste was added to the cement mixture.[21, 29, 48] The cement mixture in the drum chemically reacted with the waste solution to form a solid monolith.[28, 48] Periodically, polyethylene bottles (<4 liters) were filled with the cement mixture, sent to the small quantity waste generators on the plant site for addition of the liquid waste, and returned to Building 774 where they were packaged into drums.[21]

1.4.4 Material Inputs

Material inputs for special setups waste are presented in Table 1-2 (based on the type of waste) and include liquid wastes from laboratories, production, maintenance, and research and development activities. The special setups waste treatment process was used to solidify liquid wastes containing complexing agents that made the liquid incompatible or would interfere with the primary aqueous liquid waste treatment processes.

Table 1-2. Wastes treated in the solidification process.

Type of Waste	Compound
Laboratory Wastes	Aqueous wastes generated from sampling various waste streams including those that contain listed solvents (acetone, benzene, carbon tetrachloride, methanol, methylene chloride, methyl ethyl ketone, tetrachloroethylene, 1,1,1-trichloroethane, 1,1,2-trichloro-1,2,2-trifluoroethane, trichloroethylene, toluene, and xylene), toxicity characteristic metals (cadmium, chromium, lead, and silver), and electroplating wastes (cyanide bath rinse solutions that contained cadmium, chromium, nickel, and silver). Spent laboratory standards, including the above constituents and 1,1-dichloroethylene.
Acids/bases	Boric, chromic, hydrochloric, hydrofluoric, nitric, perchloric, phosphoric, tetraphosphoric, sodium hydroxide, sulfamic, sulfuric, oxalic, and tartaric.[2]

Type of Waste	Compound
Commercial products	Ox-out (a water solution of nitric acid and ammonium bifluoride);[33, 45] Versene (a trade name ethylenediaminetetraacetic acid [EDTA] product),[21, 54] Kepro developer (contains 1,1,1-trichloroethane),[33, 55] Metex solution (a trade name for a series of inorganic and organic acids or salts)[35] and Turco solutions (a trade name for a series of cleaners with various combinations of acids, complexing agents, and surfactants).[33, 53]
Complexing agents	Sodium lignosulfonate, tributyl phosphate, tetraphosphoric acid, citrate, oxalic acid, americium oxalate, and EDTA
ECM electrolyte	A mixture of chromic, sulfuric, and phosphoric acids[56]
Radionuclides	^{133}Ba, ^{55}Fe ^{237}Np, ^{239}Pu, ^{90}Sr, and tritium (sources)
Resins	Spent anion and cation resins
Other chemicals	Dicesium hexachloroplutonate, cyanide, acrylonitrile (vinyl cyanide), thiocyanate, and sodium sulfide solutions

1.4.5 Waste Material Parameters

To estimate the waste material parameter (WMP) weight percentages for BN004, WMP data from 100% of the completed real-time radiography (RTR) and visual examination (VE) of special setups waste drums were obtained from the AMWTP Waste Tracking System (WTS) database on October 11, 2006. This represents 49% of the estimated number of drums for this waste stream. The special setups waste was generated at RF from 1971 through 1988. Drums evaluated to estimate the WMP weights per unit of waste were generated from 1972 through 1988. Approximately 3% of the waste was generated prior to 1972. AK indicates that the waste generated in 1971 is similar to the wastes that have undergone RTR and VE. Therefore, the WTS data is representative of the waste stream. WTS is AMWTPs comprehensive, DOE-audited waste tracking database in which all waste containers are tracked cradle-to-grave and all related characterization data are stored. A statistical analysis of the RTR and VE data was performed to estimate WMP weights (by percent) for special setups waste, excluding packaging, in accordance with the requirements of MP-TRUW-8.13, Collection, Review, and Management of Acceptable Knowledge Documentation, and are summarized in Table 1-3.[50, 57–59]

Table 1-3. Estimated waste material parameter weights per unit of waste for Special Setups Waste (BN004).

Potential Waste Material Parameters	Unit Weight by Percent
Iron-based Metals/Alloys	<1
Aluminum-based Metals/Alloys	<1
Inorganic matrix	99
Other Inorganic Materials	<1
Cellulosics	<1
Plastics (waste materials)	<1
Rubber	<1

Although individual drums in this waste stream may contain other homogenous solid waste and debris materials, the waste stream as a whole will be greater than 50%, by volume, inorganic solidified homogeneous solids.[2, 50]

1.5 Prohibited Items

The following items are prohibited at the WIPP in accordance with Section B-1c of MP-TRUW-8.2, Quality Assurance Project Plan, and Section 3 of MP-TRUW-8.1, Certification Plan for INL Transuranic Waste.[9, 63]

- Liquid waste and prohibited observable liquids
- Non-radionuclide pyrophoric materials
- Hazardous wastes not occurring as co-contaminants with TRU mixed wastes
- Wastes incompatible with backfill, seal and panel closure materials, container and packaging materials, shipping container materials, or other wastes
- Wastes containing explosives or compressed gases
- Wastes with polychlorinated biphenyls (PCBs) not authorized under an U.S. Environmental Protection Agency (EPA) PCB waste disposal authorization
- Wastes exhibiting the characteristic of ignitability, corrosivity, or reactivity (hazardous waste numbers [HWNs] D001, D002, or D003)
- Waste that has ever been managed as high-level waste and waste from tanks specified in Table B-8 of MP-TRUW-8.2 unless specifically approved through a Class 3 permit modification.[63]

- Any waste container from a waste stream (or waste stream lot) that has not undergone either radiographic or VE of a statistically representative subpopulation of the waste stream in each shipment, as describe in Attachment B7 of MP-TRUW-8.2.[63]

- Sealed containers greater than four liters.

The absence of prohibited items is determined and documented through acceptable knowledge (AK) and characterization activities. Real-time radiography or VE is performed on each container in this waste stream to verify the absence of prohibited items.[51, 52] Containers that are identified as containing prohibited items during RTR or VE are treated or rejected, as appropriate. Drums containing prohibited items will not be shipped to WIPP. Non-hazardous solidification agents Aquaset®, Aquaset II-G®, and Micro Cel® E may be added to the waste by AMWTP to treat liquid in excess of WIPP WAC limits.[64, 65]

1.6 Resource Conservation and Recovery Act Determination

1.6.1 EPA Hazardous Waste Numbers

Special setups waste is characterized as mixed-TRU waste. Toxicity characteristic HWNs applied to the waste are D006, D007, D008, D011, and D029. Listed HWNs applied to this waste stream are F001, F002, F005, F006, F007, and F009.

1.6.2 Hazardous Determination

The hazardous waste determination for special setups waste is described in the following subsections.

1.6.2.1 Characteristic Waste

1.6.2.1.1 Ignitability

The materials in this waste stream do not meet the 40 Code of Federal Regulations (CFR) 261.21 definition of ignitability. The materials in this waste stream are not liquid waste. Furthermore, non hazardous absorbents (i.e., cement, vermiculite, and Oil-Dri®) were added during packaging for purposes of absorbing liquids. Containers identified with liquid in excess of WIPP WAC limits may be treated using non-hazardous solidification agents (e.g., Aquaset®, Aquaset II-G®, or Micro Cel® E) to render the waste acceptable prior to shipment.[64, 65] The materials are not liquid and are not capable of causing fire through friction, absorption of moisture, or spontaneous chemical change. These materials are not compressed gases, and the containers do not contain compressed gases. These materials are not Department of Transportation (DOT) oxidizers as defined in 49 CFR 173. Feed solutions contained small amounts of oxidizers such as oxalic acid or nitric acid; however, the waste solutions were neutralized and solidified, and the final form does not meet the definition of an oxidizer.[16–21] Therefore, this waste stream does not exhibit the characteristic of ignitability (D001).

1.6.2.1.2 Corrosivity

The materials in this waste do not meet the definition of corrosivity as defined in 40 CFR 261.22. This waste is not a liquid. Furthermore, absorbents (i.e., cement, vermiculite, and Oil-Dri®) were added during packaging for purposes of absorbing liquids.[7, 18–21] Containers identified with liquid in excess of WIPP WAC limits may be treated using non-hazardous solidification agents to render the waste acceptable prior to shipment (e.g., Aquaset®, Aquaset II-G®, or Micro-Cel® E).[64, 65] Therefore, the corrosive characteristic (D002) does not apply to this waste stream.

1.6.2.1.3 Reactivity

The materials in this waste stream do not meet the 40 CFR 261.23 definition of reactivity. The materials are stable and will not undergo violent chemical change. The materials will not react violently with water, form potentially explosive mixtures with water, or generate toxic gases, vapors, or fumes when mixed with water. The materials are not capable of detonation or explosive reaction. The materials are neither forbidden explosives nor Division 1.1, 1.2, or 1.3 (Class A or B) explosives as defined in 49 CFR 173, nor do the drums contain explosive materials.[16–21] On five occasions, small volumes of cyanide, acrylonitrile (vinyl cyanide), thiocyanate, and sodium sulfide solution were included in the liquid waste prior to solidification and are included in this waste stream.[39] However, if exposed to pH conditions between 2 and 12.5, they will not generate toxic gases, vapors, or fumes in a quantity sufficient to present a danger to human health or the environment because the chemicals have been stabilized in a solidified monolith. Containers identified with compressed gases or aerosol cans will have the prohibited items treated/removed prior to shipment. Containers with liquid in excess of WIPP WAC limits may be treated with non-hazardous solidification agents to render the waste acceptable prior to shipment (e.g., Aquaset®, Aquaset II-G®, or Micro-Cel® E).[64, 65] The materials in this waste stream are, therefore, not reactive wastes (D003).

1.6.2.1.4 Toxicity

The toxicity characteristic contaminants fall into one of two categories: metals and organics. Organic compounds include halogenated and non-halogenated solvents, pesticides, herbicides, and other toxic organic compounds.

AK documentation indicated the presence of toxicity characteristic metals cadmium (D006), chromium (D007), lead (D008), and silver (D011) because these constituents are present in the liquid wastes from the analytical laboratories and research and development operations.[1, 2, 41] Even though these contaminants were not detected in solid sampling and analysis at concentrations above their associated program required quantitation limit (PRQL) values, the waste stream is conservatively assigned EPA HWNs D006, D007, D008, and D011.

1,1 Dichloroethylene (D029) was detected in the headspace gas (HSG) sampling results. No use for 1,1-dichloroethylene was identified within the RF AK (except as a laboratory calibration standard); however, this constituent was detected in HSG sampling and analysis conducted previously at INL. Even though the calculated 90% upper confidence limit (UCL_{90})

value is below the PRQL value, EPA HWN D029 is conservatively assigned to the special setups waste.

The special setups waste includes analytical waste generated from the sampling of waste streams containing listed solvents including benzene, carbon tetrachloride, tetrachloroethylene, and trichloroethylene that were used as solvents in many operations on the plant site.[32] Because special setups wastes are characterized as listed hazardous wastes, the toxicity EPA HWNs for these constituents are not applied to this waste stream.

1.6.2.2 Listed Waste

1.6.2.2.1 F-Listed Hazardous Waste Numbers

The materials in this waste stream are listed hazardous wastes because they were mixed with or derived from waste listed in 40 CFR 261, Subpart D as hazardous waste from non-specific sources (40 CFR 261.31).

EPA HWN F001, F002, and F005 are assigned to the special setups waste for spent solvents including carbon tetrachloride (F001); tetrachloroethylene, 1,1,1-trichloroethane, 1,1,2-trichloro-1,2,2-trifluoroethane, trichloroethylene (F001, F002); methylene chloride (F002); and benzene, methyl ethyl ketone, and toluene (F005). EPA HWNs F006, F007 and F009 listed HWNs are assigned to the special setups waste because it may be contaminated with spent electroplating wastes. The special setups waste includes analytical waste generated from sampling and analyzing listed waste.

Carbon tetrachloride, tetrachloroethylene, trichloroethylene, 1,1,1-trichloroethane, and 1,1,2-trichloro-1,2,2-trifluoroethane were identified in AK documents as solvents commonly used in cleaning, degreasing, production, laboratory, and maintenance operations. Benzene, methylene chloride, and toluene were used as solvents in laboratory operations. In addition, 1,1,1-trichloroethane, trichloroethylene, and paint thinner (methyl ethyl ketone and toluene) were used for cleaning, and methylene chloride was used for paint removal.[2] Waste streams with these listed constituents were sampled and analyzed by the RF laboratories, and the waste generated from the laboratories is included in this waste stream. In addition, small amounts (4–8 liters) of organic solvents may have been added to the waste on occasion. Spent solvent wastes included electropolishing solution (containing 2-ethoxyethanol from metallography laboratories) and scintillation cocktail (containing toluene from tritium analysis).[39] Therefore, EPA HWNs F001, F002, and F005 are assigned to this waste stream.

Acetone, methanol, and xylene (non-chlorinated solvents) were also used as solvents in laboratory and production operations. Waste streams with these listed constituents were sampled and analyzed by the RF laboratories, and the waste generated from the laboratories is included in this waste stream. Methanol was detected in the HSG and solid samples at levels above the PRQL, but special setups waste is not a liquid waste. If a waste no longer exhibits the characteristic of ignitability, the F003 HWN can be removed [40 CFR 261.3(9)(1)]. Because the waste is not ignitable, the EPA HWN F003 is not assigned to this waste stream.

EPA HWNs F006, F007, and F009 are assigned because laboratories could have sampled and analyzed treated aqueous wastes from Buildings 374 and 774 treatment facilities. The treated aqueous waste from Buildings 374 and 774 include aqueous waste from electroplating operations (e.g., cyanide bath rinse solutions that contained cadmium, chromium, nickel, and silver) and the waste generated from the laboratories is included in this BN004 waste stream.[23, 27]

AK indicates that 1,1,1-trichloroethane, carbon tetrachloride, trichloroethylene, ethyl benzene, methanol, and xylene were detected above the PRQL based on HSG and solid sampling conducted previously at INL.[22] Confirmatory solid and HSG sampling and analysis did confirm the presence of listed solvent constituents; however, the concentrations are below the associated PRQLs (except for methanol). No additional EPA HWNs are required; therefore, EPA HWNs F001, F002, F005, F006, F007, and F009 are assigned to this waste stream.

1.6.2.2.2 P-, U-, and K-Listed Hazardous Waste Numbers

Although hydrofluoric acid (HF) was identified as a chemical used (for its intended purpose) during plutonium processing at RF, only spent HF sources could have been sent to special setups process. Based on this information, the U134 HWN does not apply to this waste stream.

Based on a review of AK, it was determined that the special setups waste will contain less than one percent beryllium by weight. If beryllium is present, it is a contaminant of the process and not an unused commercial chemical product, an off-specification species, a container residue, or a spill residue thereof. Therefore, the P-listed waste code for beryllium, as defined in 40 CFR 261.33, is not assigned to the waste.

The materials in this waste stream are not discarded commercial chemical products, off specification species, container residues, or spills thereof (40 CFR 261.33). The materials in this waste stream are not P- or U-listed hazardous waste.

The materials in this waste are not hazardous waste from specific sources since they were not generated from any processes listed in 40 CFR 261.32. The materials in this waste stream are, therefore, not K-listed hazardous waste.

1.6.2.3 Toxic Substances Control Act Regulated Contaminants

Polychlorinated biphenyls are not expected to be present in the special setups waste stream in concentrations greater than 50 parts per million (ppm). If any containers are identified during RTR/VE as containing PCB items (e.g., light ballasts) greater than 50 ppm, the drums containing the PCB items will be managed and shipped in accordance with the WIPP WAC.[9, 38]

1.6.2.4 Other Special Setups Waste Streams

RF107.07 was reviewed as being pertinent to this waste stream (BN004).[13] A more specific WMC (S3150) was assigned to BN004 by INL; whereas the general WMC (S3190) was assigned to RF107.07 by RFETS for these solidified inorganic waste streams. INL identified the

same WMC S3150 that was identified for IDC 004 in TWBIR. Listed waste EPA HWNs F001, F002, F005, F006, F007, and F009 were assigned to both waste streams; however, EPA HWNs D006, D007, D008, and D011, assigned to BN004 based on AK were retained although the UCL_{90} values were below the PRQL values.[2] EPA HWN D029 was conservatively assigned to BN004 because 1,1-dichloroethylene was detected in HSG sampling and analysis conducted previously at INL.[2]

RF107.07 assigned the additional EPA HWNs P030, P098, P099, P106, U003, U103, and U108, which are associated with RF waste generated after January 1995.[13, 16] None of the post-January 1995 waste is included in this waste stream.

1.7 Radionuclides

The WIPP-tracked radionuclides of concern for special setups waste are ^{238}Pu, ^{239}Pu, ^{240}Pu, ^{242}Pu, ^{233}U, ^{234}U, ^{238}U, and ^{241}Am.[8, 15, 28, 37] The remaining WIPP-tracked radionuclides, ^{137}Cs and ^{90}Sr, are expected to be present in measurable quantities in special setups waste because sources were disposed of in special setups.[47] In addition, tritium, plutonium, americium, depleted uranium, enriched uranium, ^{233}U, ^{55}Fe, ^{237}Np, ^{133}Ba, ^{60}Co, ^{228}Th, and Cm (no isotope specified)[2, 39, 46] were introduced into the solidification process in liquids received or as sources from various buildings.[2]

The ratios of the two most prevalent radionuclides in the container are compared to confirm existing AK data in compliance with WAC requirements.[7] The two most prevalent radionuclides anticipated in the special setups waste drums are ^{239}Pu and ^{240}Pu.[8]

2.0 SHIPPING CONSIDERATIONS

2.1 Waste Packaging

Special setups waste was contained in an O-ring bag inside a prepared 55-gallon drum attached to the glovebox.[18, 20] Approximately 10 to 15 pounds of Portland cement were added on top of the special setups waste before the O-ring bag was sealed. The special setups waste may also be contained in polyethylene bottles (<4 liters) inside the lined 55-gallon drum.[21]

Depending on waste packaging requirements at the time, several combinations of bags and liners were used to prepare 55-gallon drums for shipment. From 1970 to 1972, waste drums were lined with a polyethylene drum bag. Three to five pounds of Portland cement were placed in the bottom of the drum and in the drum bag. Use of the 90 mil rigid polyethylene liner began in 1972.[21] The rigid liner was placed in each drum and lined with a polyethylene round bottom drum liner.[19, 21, 25, 26] Three to five pounds of Portland cement were placed in the bottom of the rigid liner and in the round bottom liner. When a drum was full, the drum liners were twisted and taped closed, the lid was secured with a bolted ring, and a tamper-indicating device was attached to the drum.[19, 21]

After drums were inspected, one to two quarts of absorbent material (Oil-Dri®) was placed on the top of the outer, sealed polyethylene drum bag. This procedure changed in February 1982

when vermiculite was used to fill the space between the outer, sealed polyethylene drum bag and the top of the 90-mil rigid liner. Any combination of plastic bags that does not exceed five layers of confinement (of which no more than three are inner bags) is acceptable for shipment to WIPP.[62]

Although the procedure changed in 1982 and required vermiculite to be used, strict adherence to the procedure was not followed based on observations from RTR and/or VE. As a result the type, amount, and expected time-frame of absorbent use will vary. The quantity of vermiculite varied from 3-12 pounds according to the amount of waste contained in each drum.[21, 62]

Some of the 55-gallon drums may be overpacked into 83- or 85-gallon drums. Either four 55-gallon drums or two 83- or 85-gallon drums, with either the drum lid filters or the drum lids removed, may be direct loaded into an Standard Waste Box (SWB) equipped with approved filters.

2.2 Flammability Consideration

The payload containers in the waste stream must comply with the Contact Handled Transuranic Authorized Methods for Payload Control (CH-TRAMPAC) requirements. As specified in the CH-TRAMPAC, a determination of compliance with the flammable gas limits will be performed for volatile organic compounds (VOCs), hydrogen, and methane. Headspace gas sampling and analysis is performed when required by the Waste Analysis Plan (WAP) and/or CH TRAMPAC. At a minimum, the HSG analytical results are evaluated to determine the total concentration of flammable VOCs present in the waste. Payload containers, including those with HSG results exceeding 500 ppm flammable VOCs, are evaluated for compliance with applicable CH-TRAMPAC requirements prior to shipment. Payloads containing flammable gases are managed in accordance with CCP-PO-003, CCP Transuranic Authorized Methods for Payload Control (CCP CH-TRAMPAC).[61]

3.0 REFERENCES

NOTE: *AMWTP documents such as procedures, AK reports, and operating instructions, are cited without revision numbers or dates. The most recent revisions of these documents are available through the AMWTP Electronic Document Management System (EDMS). Previous revisions are available on EDMS.*

1. RPT-TRUW-12, AMWTP Waste Stream Designations [P393A]

2. INEL-96/0280, Acceptable Knowledge Document for INEEL Stored Transuranic Waste – Rocky Flats Plant Waste, Rev. 3, February 28, 2003 [P368A]

3. NDK-001-10, Memo to file, Estimation of Number of Drums for BN004 Waste Stream, July 5, 2010 [C876A]

4. DOE/WIPP-01-3194, CH-TRU Waste Content Codes (CH-TRUCON)

5. DOE/TRU-2006-3344, Transuranic Waste Baseline Inventory Report, U.S. Department of Energy [P746A]

6. DOE/LLW-217, DOE Waste Treatability Group Guidance, 1995 [P670A]

7. DOE/WIPP-02-3122, Transuranic Waste Acceptance Criteria for the Waste Isolation Pilot Plant, Rev. 6.5, June 30, 2010

8. RPT-TRUW-07, Determination of Radioisotopic Content in TRU Waste Based on Acceptable Knowledge [P398A]

9. MP-TRUW-8.1, Certification Plan for INL Transuranic Waste

10. Memorandum from DOE CAO to J. M. Roberson, RFFO, and J. M. Wilcynski, INEEL, Identification of Defense Waste Streams Generated at Rocky Flats Environmental Technology Site (RFETS), May 20, 1997 [C191A]

11. Correspondence from G. F. Jaskot to Distribution, Certification Waste Documentation, May 9, 1986 [C008A]

12. Record of Conversation of Maurie Maas, March 19, 2003 [C073A]

13. RMRS-WIPP-98-100, Section 7.29, RFETS Acceptable Knowledge TRU/TRM Waste Stream Summaries, TRM Solidified Inorganic Waste (F001, F002, F005, F006, F007, F009, P030, P098, P099, P106, U003, U103, U108), Profile No. RF107.07 [P494A]

14. Telecon between Al Morgan (retired) of Rocky Flats and Jeff Harrison, Building 776 Size Reduction Area, February 27, 1997 [C175A]

15. Interview of Al Morgan, March 19, 1997 [C184A]

16. Backlog Waste Reassessment Baseline Book, Waste Form 60, Solidified Lab Waste [P495A]

17. PSD87-059, EG&G Sampling Program Results FY1987 [P013A]

18. EGG WM 6503, TRU Waste Sampling Program: Volume I Waste Characterization [P015A]

19. INEL-95/0281, Idaho National Engineering Laboratory Code Assessment of the Rocky Flats Transuranic Waste, August 10, 2006 [P016A]

20. PSD86-061, EG&G Drum Sampling Program Results FY1986 [P021A]

21. WM-F1-82-021, Content Code Assessments for INEL Contact-Handled Stored Transuranic Wastes [P024A]

22. INEL-95/0397, Summary of Transuranic Waste Characterization Programs at the INEL (1979-Present) [P033A]

23. Backlog Waste Reassessment Baseline Book [P052A]

24. Tasks 3 & 4 Final Draft Report, Reconstruction of Historical Rocky Flats Operations and Identification of Release Points [P053A]

25. WO-4034-C, Packaging Wastes for Shipment Offsite (U) [P063A]

26. WO 4034-F, Waste Packaging Requirements [P064A]

27. Waste Stream Identification and Characterization [P067A]

28. Operational Safety Analysis (OSA), Waste Receipt and Processing No. 774.001 [P070A]

29. A-008-LWTO, Process Qualification Report for Miscellaneous Waste Handling and Solidification (Bottlebox) Building 774 [P073A]

30. Waste Stream and Residue Identification and Characterization Building 774. Version 3.2 [P077A]

31. Waste Stream and Residue Identification and Characterization Building 776. Version 3.2 [P078A]

32. ISSN 0738-0232, RCRA Land Disposal Restrictions: A Guide to Compliance, The Hazardous Waste Consultant. Vol. 12, Issue 6, 1995 Edition [P080A]

33. Materials Hazards Manual [P091A]

34. Waste Stream Residue Identification and Characterization Building 559, Version 5.0 [P107A]

35. Material Safety Data Sheet for Metex Chemicals [P119A]

36. INEL 95/029, RWMC-EDF-805, Matrix Parameter Category Groups (MPCG) Engineering Design File [P141A]

37. EDF-RWMC-840, Document SWEPP NDA Compliance Development, Bechtel BWXT Idaho, LLC [P240A]

38. Comparison of Real Time Radiography (RTR) and Visual Examination Results of the Stored Waste Examination Pilot Plant Certified Waste Sampling Program. EDF 2710 and the associated RTR-VE Database CD, December 11, 2002 [P321A]

39. Building 774 Set Up Log Book [U043A]

40. A History of the Rocky Flats Plutonium/Actinide Recovery Plant 1952 to 1991, Draft October 30, 1991 [U047A]

41. Toxicity Characteristic Leaching Procedure Test Results of Cemented Surrogate Analytical Laboratory Solution Waste—Part 2 [U054A]

42. Drum Prefix Numbers and Corresponding Material Balance Areas [U059A]

43. Inventory values as generated by TRIPS Change Request (TCR) 1821, May 22, 2001 [U092A]

44. Draft Characterization Report: Characterization of Rocky Flats Plant Special Setups Sludge Waste (IDCs 004, 802) [U107A]

45. Material Safety Data Sheet for OX-Out 536, ChemClean Corporation [P129A]

46. EDF-3374, Radioassay Data Collected During 3100 Cubic Meter Project [P322A]

47. Cs-137/Sr-90 expected only in RF-IDC 004 and 480 wastes, February 28, 2005 [AKR 05 208]

48. WO-4021-C, Miscellaneous Aqueous Waste Handling and Solidification [P496A]

49. Not used

50. Memorandum to file, Waste Material Parameter Weight Calculations and Supporting Data to Determine Waste Material Parameter Weight per Unit of Waste, January 19, 2007 [C534A]

51. INST-OI-12, Real Time Radiography Operations (Drums)[P407A]

52. INST-OI-34, Non-Facility Visual Examination Operations [P387A]

53. Material Safety Data Sheet for Turco, Turco Products various [P605A]

54. Material Safety Data Sheet for Versene, Dow Chemical [P606A]

55. Material Safety Information for Kepro, Kepro Circuit System various [P607A]

56. RFP-1985, The Heats of Solution of Beryllium in Chemical Milling Solutions, James D. Navratil and Franklin L. Oetting [P608A]

57. MP-TRUW-8.13, Collection, Review and Management of Acceptable Knowledge Documentation [P418A]

58. BBWI-Generated Drum Data, including Data from the Transuranic Waste Management Information System (TWMIS) [U127A]

59. RPT-TRUW-56, Acceptable Knowledge Document for INL Stored Transuranic Waste – Rocky Flats Plant [P649A]

60. Interim Guidance on Ensuring that Waste Qualifies for Disposal at the Waste Isolation Pilot Plant [P203A]

61. CCP-PO-003, CCP Transuranic Authorized Methods For Payload Control (CCP CH TRAMPAC), Central Characterization Project, Rev. 11, June 4, 2009

62. RPT-TRUW-05, Waste Matrix Code Reference Manual [P399A]

63. MP-TRUW-8.2, Quality Assurance Project Plan

64. Material Safety Data Sheets, Aquaset® (sodium montmorillonite) and Aquaset II-G® (sepiolite) Fluid Tech, January 1, 2005 and November 1, 2008 [P881S]

65. Material Safety Data Sheet, Micro-Cel®E, Celite Corporation, January 17, 2007 [P808S]

66. RCM-001-10, Memo to file, Earliest Pack Date for Rocky Flats Waste Retrieved from Pits 11 and 12, July 5, 2010 [C875S]

67. DOE/TRU-20098-3425, Annual Transuranic Waste Inventory Report -2009 [P838A]

RECORD
P2002AR1
B-2014-0243
SONEIL
09/11/2014

AK3

AMWTP Advanced Mixed Waste Treatment Project	AK Source Document Review Summary	Form-1068, Rev. 4 Effective: 01/08/09 Page 1 of 2

Implementing Document: MP-TRUW-8.13

1. Source Document Tracking Number: P2002A	2. Revision: 1

3. Category

- [x] Published Documentation
- [ ] Unpublished Documentation
- [ ] Correspondence
- [ ] Discrepancy

4. Title/Description Information: BN510.3 Waste Stream Profile Package for Supercompactor Debris Waste

Document Number: BN510.3
Revision: 0
Author: AMWTP
Date: 02/05/2014

5. AK Element	6. Generator Or Waste Type(s)	7. Location in Source Doc.	8. AK Information Summary:
WM1, WM2, WM3, WM4, WM5, WM6, WM7, WM8	BN	All	BN510.3 WSPF for supercompacted debris waste
WS1, WS2, WS3, WS4, WS5, WS6, WS7, WS8	BN-508, BN-550	All	BN510.3 WSPF for supercompacted debris waste

9. Document Summary:

This is the waste stream profile package for BN510.3 which includes the following:

1. CBFO Approval Letter for CN#1, dated 02/05/14
2. CBFO DRR CN#1, dated 01/28/14
3. CN#1 BN510.3, dated 01/27/14
4. BN510.3 CN#1 Transmittal email, dated 12/19/13
5. CBFO Approval Letter BN510.3, dated 11/27/13
6. CBFO DRR BN510.3, dated 11/20/13
7. WSPF BN510.3 (Forms-1195, 1597, 1598), dated 11/18/13
8. RPT-TRUW-83 R8, dated 01/28/14
9. BN510.3 Form-1067, dated 08/21/14
10. BN510.3 Form 1777, not dated
11. BN510.3 Form-1187, not dated
12. BN510.3 Transmittal email, dated 10/23/13

This revision replaces revision 0 and includes the most recent revision of RPT-TRUW-83 as well as information about Change Notice #1.

10. Source Document Data Limitations (if any):

None identified at this time.

11.	AK Expert:	Randall C. Morris		9/9/2014
		Print	Sign	Date

Department of Energy
Carlsbad Field Office
P. O. Box 3090
Carlsbad, New Mexico 88221

FEB 5 2014

Mr. John E. Kieling, Chief
Hazardous Waste Bureau
New Mexico Environment Department
2905 Rodeo Park Drive East, Building 1
Santa Fe, New Mexico 87505-6303

Subject: Review of Advanced Mixed Waste Treatment Project Waste Stream Profile Form Number BN510.3, *Supercompacted Debris Waste*

Dear Mr. Kieling:

The Department of Energy, Carlsbad Field Office has approved the Waste Stream Profile Form (WSPF) Number BN510.3, *Supercompacted Debris Waste* for the Advanced Mixed Waste Treatment Project.

Enclosed is a copy of the WSPF as required by Section C-5a of the Waste Isolation Pilot Plant, Hazardous Waste Facility Permit, No. NM4890139088-TSDF.

I certify under penalty of law that this document and all attachments were prepared under my direction or supervision according to a system designed to assure that qualified personnel properly gather and evaluate the information submitted. Based on my inquiry of the person or persons who manage the system, or those persons directly responsible for gathering the information, the information submitted is, to the best of my knowledge and belief, true, accurate, and complete. I am aware that there are significant penalties for submitting false information, including the possibility of fine and imprisonment for knowing violations.

If you have questions, please contact Mr. J. R. Stroble, Director of the Office of the National TRU Program, at (575) 234-7313.

Sincerely,

RC Bryson for
Jose R. Franco, Manager
Carlsbad Field Office

Enclosure

cc: w/enclosure

S. Holmes, NMED	*ED
T. Kliphuis, NMED	ED
R. Maestas, NMED	ED
C. Smith, NMED	ED
C. Walker,TechLaw	ED
WIPP Operating Record	ED
CBFO M&RC	

*ED denotes electronic distribution

CARLSBAD FIELD OFFICE

SITE: AMWTP

DOCUMENT TITLE: Update for the WIPP Operating Record (Change Notice No. 1) Supercompacted Debris Waste (BN510.3)

DOCUMENT NUMBER AND REVISION: BN510.3

TYPE OF REVIEW: Technical

ASSIGNED REVIEWER: CBFO NTP

FORWARD RESPONSE TO: Site.Documents@wipp.ws

#	PAGE	SECTION	COMMENT (Cite Rqmt, if applicable)	RESPONSE	ACC	REJ
1.			No comments			
2.						
3.						
4.						
5.						

COMMENT RESOLUTION APPROVED:

Nima Castaneda
NTP Signature

January 28, 2014
Date

N/A
QA Signature, if applicable

Date

Update for WIPP Operating Record (Change Notice #1)
Supercompacted Debris Waste (BN510.3)

Please add the following information to the WIPP Operating Record for Waste Stream Profile Form (WSPF) BN510.3. This waste stream is Supercompacted Debris Waste and was approved by DOE/CBFO on November 27, 2013.

The WSPF components are bolded. The updates are:

1. WSPF Form-1195, Waste Stream Information

Change number of drums from "9,000 100 gallon drums" to "9,025 100 gallon drums."

2. WSPF Form-1195, Required Waste Stream Information

Add new reference number 26 to:

"Material inputs or other information identifying chemical/radionuclide content and physical waste form."

3. WSPF Form-1195, Additional Acceptable Knowledge Documentation

Add reference number 26 to:

"Material safety data sheets."

4. WSPF Form-1195, Reference List

Change reference number 1 to read:

"RPT-TRUW-83, Acceptable Knowledge Summary for Supercompacted Debris Waste, Rev. 7, December 3, 2013."

Add new reference number 26 to the list of references as follows:

"RPT-TRUW-93, Acceptable Knowledge Document for Los Alamos National Laboratory, Rev. 1, August 1, 2013."

5. AK Summary, Supercompacted Debris Waste (RPT-TRUW-83)

Replace Revision 7 with the attached Revision 8. See revised document.

Reason/Justification for Changes

Item 1.

Updated WSPF Form-1195, Waste Stream Information, due to LANL debris waste inclusion as feedstock. This is a waste stream volume increase.

Item 2.

Revised WSPF Form 1195, Required Waste Stream Information, to include new reference 26 for: "Material inputs or other information identifying chemical/radionuclide content and physical waste form."

Item 3.

Revised WSPF Form 1195, Supplemental Documentation, to include new LANL reference (i.e., 26) to line item for "Material Safety Data Sheets."

Item 4.

Updated reference list to include most current revision for reference 1 and to add reference 26.

Item 5.

The AK Summary was revised to include relevant information for the addition of the LANL waste as feedstock to the supercompactor and to update references.

Update for the WIPP Operating Record (BN510.3) certification

The changes submitted in this change notice do not affect the waste stream designation, assignment of EPA hazardous waste numbers, or the waste matrix code assigned to the previously approved BN510.3 waste stream profile form.

I hereby certify that I have reviewed this Update for WIPP Operating Record, and it is complete and accurate to the best of my knowledge. I understand that this information will be made available to regulatory agencies and that there are significant penalties for submitting false information, including the possibility of fines and imprisonment for knowing violations.

Signature of TRU Programs Manager	George Byram, TRU Programs Manager Printed Name and Title	1/27/14 Date

From:	Tedford, Gina
To:	Morris, Randall C.
Subject:	FW: For Approval RPT-TRUW-83 Rev 8 Acceptable Knowledge Summary For Supercompacted Debris Waste
Date:	Monday, September 08, 2014 4:18:18 PM
Attachments:	Change Notice No. 1 Submittal Scanned and signed version 12-19-13 (2).pdf RPT-TRUW-83_R8C.pdf RPT-TRUW-83_R8C-Redline.pdf

From: Blattner, Delisa
Sent: Thursday, December 19, 2013 11:04 AM
To: Site Documents - DOE
Cc: Records Management-Document Control; 'marcus.pinzel@wipp.ws'; Schweinsberg, Eric; Roberts, Benjamine B; Wells, Jerry L; Jenkins, Talley W Jr; Byram, George; Tedford, Gina; pinzel.marcu@wipp.ws; guillermo.koreen@wipp.ws; chaves.rick@wipp.ws; Carpenter, Steve; Document Services
Subject: For Approval RPT-TRUW-83 Rev 8 Acceptable Knowledge Summary For Supercompacted Debris Waste

Greetings:

Please find attached the Change Notice to Waste Stream Profile Form (Supercompacted Debris BN-510.3) and RPT-TRUW-83 which has been discussed on the weekly conference call. Included is a red-lined version for your convenience in review and approval.

If you have any immediate questions please contact Steve Carpenter at 208-680-1127.

Thank you
Delisa
AMWTP Doc.Services

Department of Energy
Carlsbad Field Office
P. O. Box 3090
Carlsbad, New Mexico 88221

NOV 27 2013

Mr. John E. Kieling, Chief
Hazardous Waste Bureau
New Mexico Environment Department
2905 Rodeo Park Drive East, Building 1
Santa Fe, New Mexico 87505-6303

Subject: Review of Advanced Mixed Waste Treatment Project Waste Stream Profile Form Number BN510.3, *Supercompacted Debris Waste*

Dear Mr. Kieling:

The Department of Energy, Carlsbad Field Office has approved the Waste Stream Profile Form (WSPF) Number BN510.3, *Supercompacted Debris Waste* for the Advanced Mixed Waste Treatment Project.

Enclosed is a copy of the WSPF as required by Section C-5a of the Waste Isolation Pilot Plant, Hazardous Waste Facility Permit, No. NM4890139088-TSDF.

I certify under penalty of law that this document and all attachments were prepared under my direction or supervision according to a system designed to assure that qualified personnel properly gather and evaluate the information submitted. Based on my inquiry of the person or persons who manage the system, or those persons directly responsible for gathering the information, the information submitted is, to the best of my knowledge and belief, true, accurate, and complete. I am aware that there are significant penalties for submitting false information, including the possibility of fine and imprisonment for knowing violations.

If you have questions, please contact Mr. J. R. Stroble, Director of the Office of the National TRU Program, at (575) 234-7313.

Sincerely,

Jose R. Franco, Manager
Carlsbad Field Office

Enclosure

cc: w/enclosure

S. Holmes, NMED	*ED
T. Kliphuis, NMED	ED
C. Smith, NMED	ED
R. Maestas, NMED	ED
C. Walker, TechLaw	ED

CBFO M&RC
*ED denotes electronic distribution

CBFO:NTP:JRS:GL:13-0788:UFC 5900.00

ATTACHMENT 1
Page 1 of 1

CARLSBAD FIELD OFFICE

SITE: AMWTP

DOCUMENT TITLE: Waste Stream Profile Form for the Supercompacted Debris Waste

DOCUMENT NUMBER AND REVISION: BN510.3

TYPE OF REVIEW: Technical

ASSIGNED REVIEWER: CBFO NTP

FORWARD RESPONSE TO: Site.Documents@wipp.ws

#	PAGE	SECTION	COMMENT (Cite Rqmt, if applicable)	RESPONSE	ACC	REJ
1.			No comments.			
2.						
3.						
4.						
5.						
6.						

COMMENT RESOLUTION APPROVED:

NTP Signature

11/20/2013
Date

N/A
QA Signature, if applicable

Date

AMWTP Advanced Mixed Waste Treatment Project	**Waste Stream Profile Form**	**Form-1195** **Rev. 5** **Effective: 03/02/11** **Page 1 of 3**

Implementing Document: MP-TRUW-8.14

Waste Stream Profile Number: BN510.3

Generator site name: Advanced Mixed Waste Treatment Project | Technical contact: Eric Schweinsberg

Generator site EPA ID: ID4890008952 | Technical contact phone number: (208)557-6425

Date(s) of audit report approval by NMED: 4/29/05 (Revised 5/3/05), 6/16/06, 1/18/08, 1/9/09, 1/8/10, 1/25/11, 5/1/12, 9/10/13

Title, version number, and date of documents used for WAP certification:

Certification Plan for INL Transuranic Waste, MP-TRUW-8.1, Rev. 24, June 10, 2013.

Quality Assurance Project Plan, MP-TRUW-8.2, Rev. 17, June 11, 2013

CCP Transuranic Authorized Methods For Payload Control (CCP CH-TRAMPAC), CCP-PO-003, Rev. 13, 7/31/2013

Did your facility generate this waste? ☒ Yes ☐ No If no, provide the name and EPA ID of the original generator:

Waste Stream Information

WIPP ID: IN-BN510.3[3] | Summary Category Group: S5000

Waste Matrix Code Group: Heterogeneous Debris Waste | Waste Stream Name: Supercompacted Debris Waste

Description from the ATWIR: BN510.3 is a newly generated debris waste stream generated from supercompacted 55-gallon containers of debris waste.[3]

Defense TRU Waste: ☒ Yes ☐ No | Check One: ☒ CH ☐ RH

Number of SWBs: 92 | Number of Drums: 9,000 100 gallon drums | Number of Canisters: 0

Batch Data report numbers supporting this waste stream characterization: See Characterization Summary Report

List applicable EPA Hazardous Waste Numbers:[2]: D004, D005, D006, D007, D008, D009, D010, D011, D022, D027, D028, D029, D030, D032, D033, D034, D037, D043, F001, F002, F004, F005, F006, F007, and F009

Applicable TRUCON Content Codes: ID121

Acceptable Knowledge Information [1]

(For the following, enter the supporting documentation used [i.e., references and dates])

Required Program Information

Map of site: Reference Nos.2 and 3

Facility mission description: Reference No.11

Description of operations that generate waste: References Nos.1 and 3

Waste identification/categorization schemes: Reference Nos.1, 3, 4, 5 and 6

Types and quantities of waste generated: Reference No. 1

Correlation of waste streams generated from the same building and process, as appropriate: Reference Nos. 1 and 3

Waste certification procedures: Reference Nos.7 and 21

Required Waste Stream Information

Area(s) and building(s) from which the waste stream was generated: Reference Nos. 1 and 3

Waste stream volume and time period of generation: Reference No. 1

Waste generating process description for each building: Reference Nos.1 and 3

Documentation regarding how site has historically managed the waste: Reference No. 1 and 3

Process flow diagrams: Reference Nos. 1 and 3

Material inputs or other information identifying chemical/radionuclide content and physical waste form: Ref. Nos. 1, 3, 4, 5, 6, 16, 17, 18, 19, 20, 22, and 24

Waste Material Parameter Weight Estimates per unit of waste: Reference No. 1

Which Defense Activity generated the waste: (check one)

- ☒ Weapons activities including defense inertial confinement fusion [4]
- ☐ Verification and control technology
- ☐ Defense nuclear waste and material by products management
- ☐ Defense nuclear waste and materials security and safeguards and security investigations
- ☐ Naval Reactors development
- ☐ Defense research and development
- ☐ Defense nuclear material production

Additional Acceptable Knowledge Documentation

Process design documents:	N/A
Standard operating procedures:	Reference Nos. 1, 3, 13, and 25
Safety Analysis Reports:	Reference No. 14
Waste packaging records:	N/A
Test plans/research project reports:	N/A
Site databases:	Reference No 15
Information from site personnel:	N/A
Standard industry documents:	N/A
Analytical data relevant to the waste stream:	N/A
Material safety data sheets:	Reference Nos. 1, 16, 17, 18, 19, 20, 22, and 24
Sampling and analysis data from comparable/surrogate waste streams:	N/A
Laboratory notebooks:	N/A

Characterization Information [2]

For the following, when applicable, enter procedure title(s), number(s) and date(s)

Radiography:	Reference Nos: 8 and 23
Visual Examination:	Reference Nos. 9 and 10

Waste Stream Profile Form Certification:

I hereby certify that I have reviewed the information in this Waste Stream Profile Form, and it is complete and accurate to the best of my knowledge. I understand that this information will be made available to regulatory agencies and that there are significant penalties for submitting false information, including the possibility of fines and imprisonment for knowing violations.

Eric Schweinsberg — Signature of Site Project Manager

Eric Schweinsberg — Printed Name

November 18th, 2013 — Date

NOTE: (1) Use back of sheet or continuation sheets, if required.

(2) If radiography, visual examination were used to determine EPA Hazardous Waste Codes, attach a signed Characterization Information Summary documenting this determination.

(3) This waste stream is currently not identified in the ATWIR. The ATWIR will be updated at the time of the next data call to include the following: BN510.3 waste stream is a newly generated debris waste stream generated from supercompacted 55-gallon containers of debris waste.

(4) The debris waste identified as feedstock to the AMWTP Supercompactor originated from various defense-related sources that include: verification and control technology, weapons activities including defense inertial confinement fusion, defense nuclear waste and material by products management, defense nuclear waste and materials security and safeguards and security investigations, Naval reactors development, defense research and development and defense nuclear material production. Currently the largest contributing debris feedstock is associated with debris wastes generated from defense-related weapons activities associated with one or more of eight U.S. Department of Energy (DOE) sites.

Reference List:

1. RPT-TRUW-83, Acceptable Knowledge Summary for Supercompacted Debris Waste, Rev. 6, September 10, 2013
2. DWG-5232-52-0101, Site Plan of the Advanced Mixed Waste Treatment Facility, Rev. 0, April 1999
3. RPT -TRUW-06, Acceptable Knowledge Document for AMWTP Waste, Rev. 15, October 23, 2013
4. RPT-TRUW-12, AMWTP Waste Stream Designations, Rev. 21, October 7, 2013
5. RPT-TRUW-05, Waste Matrix Code Reference Manual, Rev. 33, October 31, 2013
6. RPT-TRUW-07, Determination of Radioisotopic Content in TRU Waste Based on Acceptable Knowledge, Rev. 19, November 5, 2013
7. MP-TRUW-8.5, TRU Waste Certification, Rev. 29, June 11, 2013
8. INST-OI-12, Real-Time Radiography Examinations (Certification Scans), Rev. 52, August 13, 2013
9. INST-OI-34, Non-Facility Visual Examination Operations, Rev. 28, September 3, 2013
10. INST-FOI-17, Facility Visual Examination Operations, Rev. 27, September 3, 2013
11. RPT-PEP-01, Project Execution Plan, Rev 6, October 03, 2012
12. MP-TRUW-8.2, Quality Assurance Project Plan, Rev. 17, June 11, 2013
13. INST-FOI-20, Supercompactor and Post-Compaction Operations, Rev. 40, September 30, 2013
14. RPT-DSA-02, Documented Safety Analysis, Rev. 9, August 23, 2012
15. BBWI-Generated Drum Data, including Data from the Transuranic Waste Management Information System (TWMIS)
16. RPT-TRUW-30, Acceptable Knowledge Summary for Supercompacted Debris Waste (BN510), Rev. 7, July 02, 2012
17. RPT-TRUW-56, Acceptable Knowledge Document for INL Stored Transuranic Waste-Rocky Flats Plant, Rev. 5, May 09, 2012
18. RPT-TRUW-04, Acceptable Knowledge Document for the Battelle Columbus Laboratories, Building JN-4 Plutonium Laboratory, Rev. 6, June 25, 2012
19. RPT-TRUW-13, Acceptable Knowledge Document for INL Stored Transuranic Waste-Mound Plant Waste, Rev. 7, July 05, 2012
20. RPT-TRUW-79, Acceptable Knowledge Document for Materials and Fuels Complex Waste, Rev 3, September 30, 2013
21. MP-TRUW-8.1, Certification Plan for INL Transuranic Waste, Rev. 24, June 10, 2013
22. RPT-TRUW-89, Acceptable Knowledge Baseline for Argonne National Laboratory-East Waste, Rev 1, March 20, 2013
23. INST-OI-14, Drum Assay Operations, Rev 34, October 28, 2012
24. RPT-TRUW-91, Acceptable Knowledge Document for Pre-1980 INL-Exhumed SDA Waste, Rev. 1, August 1, 2013
25. MP-TRUW-8.13, Collection, Review, and Management of Acceptable Knowledge Documentation, Rev. 25, August 13, 2013.

AMWTP Advanced Mixed Waste Treatment Project	**Reconciliation with Data Quality Objectives**	Form-1597 Rev. 7 Effective: 06/12/13 Page 1 of 2

Implementing Document: MP-TRUW-8.11

I certify by signature below that data of sufficient type, quality, and quantity are collected to meet WAP DQOs.

WSPF No.: **BN510.3**

Data Quality Objective	Yes	No	N/A	Comment
1. Have all containers in the lot been assigned the correct Waste Matrix Code?	☒	☐	☐	
2. Have waste material parameter weights been established for each container in the lot?	☒	☐	☐	
3. Does each waste container of waste contain transuranic (TRU) radioactive waste?	☒	☐	☐	
4. Does the waste stream exhibit a toxicity characteristic (TC) under 40 CFR Part 261, Subpart C?	☒	☐	☐	
5. Does the waste stream contain listed waste found in 20.4.1.200 NMAC incorporating 40 CFR, Part 261, Subpart D?	☒	☐	☐	
6. Can the waste stream be classified as hazardous or nonhazardous?	☒	☐	☐	The waste is classified as a mixed waste.
7. Have the overall completeness, comparability, and representativeness quality assurance objectives (QAOs) been met for each of the testing procedures as specified in MP-TRUW-8.2, Sections C3-2 and C3-3, for the lot?	☒	☐	☐	
8. Was an Open nonconformance report (NCR) search performed for all containers/pucks/source containers on the final list for the waste stream profile/reconciliation lot?	☒	☐	☐	

WSPF No.: BN510.3

Data Quality Objective	Yes	No	N/A	Comment
9. Was an Open NCR search performed for all batches in the final list for the waste stream profile/reconciliation lot?	☒	☐	☐	
10. Were all batches identified in the waste stream profile form (WSPF) or reconciliation lot complete through site project manager (SPM) signature release? List any batches identified as not complete through validation.	☒	☐	☐	
11. Were any open NCRs found that are applicable to the waste stream profile/reconciliation lot? List NCR, container, and batch.	☐	☒	☐	
12. Is there an approved AK Sufficiency Determination for this waste stream?	☐	☒	☐	The AMWTP has not sought an AK sufficiency determination for this waste stream.

Site Project Manager: Eric Schweinsberg (Printed name) Eric Schweinsberg (Signature) Nov. 18th 2013 (Date)

2nd Site Project Manager: George Byram (Printed name) George B (Signature) 11/18/13 (Date)

WSPF Number: BN510.3 **Lot Number:** 1

Characterization Information Summary
Introduction

Advanced Mixed Waste Treatment Project (AMWTP) has compiled Acceptable Knowledge (AK) information for waste stream BN510.3 Supercompacted Debris Waste as required by MP-TRUW-8.1, Certification Plan for INL Transuranic waste and MP-TRUW-8.2, Quality Assurance Project Plan, (QAPjP). In addition, AMWTP has conducted characterization using Acceptable Knowledge (AK), Real Time Radiography (RTR)/Visual Examination (VE) and Non-Destructive Radioassay (NDA/RA).

Justification for Selection of RTR and/or VE as an appropriate method for characterizing the waste

The box line waste is characterized using VE and the direct feed waste is characterized by RTR or VE. VE is the appropriate method for characterizing box line waste because it can be accomplished and recorded per the QAPjP (MP-TRUW-8.2) during sorting, size reduction, and repackaging into 55 gallon drums. Radiography is the appropriate method for the direct feed line because it can be readily accomplished per the QAPjP (MP-TRUW-8.2) on direct feed drums. Where dense or otherwise impenetrable objects and/or lead shielding that may create a condition or configuration where examination using radiography will not yield acceptable DQOs, only VE is appropriate. The selected containers in the initial lot have undergone the appropriate RTR/VE and NDA characterization techniques in addition to characterization by AK. The physical form was confirmed to match the AK physical form description for the applicable IDC prior to compaction and all containers have been assigned to the correct waste matrix code.

Table 1 presents the correlation of Container Identification Numbers to Data Packages. Table 2 presents the RTR/VE summary of prohibited items for each container in the lot.

The Site Project Manager (SPM) signature certifies that through AK, testing and/or analysis that the waste included in this waste stream is not corrosive, ignitable, reactive, or incompatible with the WIPP Treatment, Storage, and Disposal Facility (TSDF) and does not contain prohibited items (See RPT-TRUW-83 for more information).

HWNs are assigned based on AK. The HWN assignment for this waste stream includes:

- Toxicity characteristic metals – D004 through D011
- Toxicity characteristic organics – D022, D027, D028, D029, D030, D032, D033, D034, D037 and D043
- F-Listed HWNs include: F001, F002, F004, F005, F006, F007 and F009

SPM

Printed Name: Eric Schweinsberg Signature: Eric Schweinsberg Date: November 18th 2013

2nd SPM

Printed Name: George Byram Signature: George Byram Date: 11/18/13

SPM signature indicates that the information presented in this package is consistent with batch data reports and indicates concurrence with all information presented in this report.

WSPF Number: BN510.3 **Lot Number:** 1

Characterization Information Summary

Characterization Description:

Containers listed below were characterized by RTR (INST-OI-12, Real-Time Radiography Examinations [Certification Scans]) and NDA (INST-OI- 14, Drum Assay Operations).

Table 1. Correlation of Container Identification Numbers to Data Package.

Container No.	RTR Data Package	RA Data Package	VE Data Package
10295803	RTR11-00419	ASY11-02566	N/A
10309125	RTR11-00371	ASY11-02567	N/A
10314331	RTR11-00426	ASY11-02580	N/A
10316836	RTR11-00267	ASY11-01600	N/A
10343019	RTR11-00428	ASY12-01931	N/A
10314966	RTR13-00001	ASY13-00023	N/A
10320665	RTR11-00265	ASY11-01599	N/A
10322386	RTR11-00265	ASY11-01584	N/A
10344289	RTR11-00289	ASY11-01764	N/A
10306575	RTR12-00170	ASY12-04138	N/A

WSPF Number: BN510.3 **Lot Number:** 1

Table 2. RTR/VE Summary of Prohibited Items.

Container No.	RTR Prohibited Items	VE Prohibited Items
10295803	None	None
10309125	None	None
10314331	None	None
10316836	None	None
10343019	None	None
10314966	None	None
10320665	None	None
10322386	None	None
10344289	None	None
10306575	None	None

Acceptable Knowledge Summary for Supercompacted Debris Waste

Advanced Mixed Waste Treatment Project

Approval:

(Signature on file. See DCR-13010.) 01/28/14

Date

REVISION LOG

Revision Number	Date Approved	Pages Affected	Description of Revision
0	09/10/2010	All	DCR-9081. Initial issue.
1	01/12/11	Various	DCR-9747. References modified to accommodate reference changes within AK baseline document for Hanford waste. Revised to incorporate WIPP WAP permit renewal changes. Editorial corrections
2	01/31/12	Various	DCR-10508. Added changes approved by CBFO in Change Notice 1 to BN510.1 waste stream profile. Incorporated BLUESHEET-077.
3	09/17/12	5, A1, A2	DCR-11583. Added changes approved by CBFO in Change Notice 2 to BN510.1 waste stream profile.
4	02/07/13	Various	DCR-12077. Added changes approved by CBFO in Change Notice 3 to BN510.1 waste stream profile. Periodic review.
5	03/18/13	Various	DCR-12123. Changes made to address NWP and CBFO DRR comments.
6	09/09/13	All	DCR-12229. Entire document revised. Changed to update the document to reflect addition of MFC waste, to incorporate both BN510.1 and BN510.2 into same document, and to incorporate new WIPP permit requirements.
7	11/27/13	All	DCR-12760. Document changed to reflect the addition of SDA debris waste as Supercompactor feedstock. The new WSP is designated as BN510.3.
8	01/28/14	All	DCR-13010. Update document to include LANL debris waste as feedstock to the Supercompactor.

CONTENTS

1.0 WASTE STREAM DESCRIPTION 1
1.1 Waste Stream Number 1
1.2 Basic Waste Stream Information 1
1.3 Waste Stream Description 8
1.4 Process Description 9
1.5 AK Sufficiency Determination 18
1.6 Prohibited Items 19
1.7 Resource Conservation and Recovery Act Determination 20
1.8 Radionuclides 34
2.0 SHIPPING CONSIDERATIONS 36
2.1 Waste Packaging 36
2.2 Flammability Consideration 36
3.0 REFERENCES 36
Appendix A – Approved Feedstock Debris Waste by Original Generator and IDC A1

FIGURES

Figure 1. Flow diagram illustrating the generation and processing of AMWTP supercompacted debris waste 11

Figure 2. Document hierarchy and information flow for AK. 17

TABLES

Table 1. Physical waste form description for BN510.3. 9

Table 2. Waste material parameters for BN510.3 18

Table 3. HWN assignment by generator site for BN510.3. 22

Table 4. Predominant radionuclides expected in debris wastes by generator site. 35

ACRONYMS

AE	Argonne National Laboratory-East (generator site prefix)
AFCI	Advanced Fuel Cycle Initiative
AK	acceptable knowledge
AL/CL	Analytical Laboratory/Casting Laboratory
AMWTF	Advanced Mixed Waste Treatment Facility
AMWTP	Advanced Mixed Waste Treatment Project
ANL-E	Argonne National Laboratory-East
ANL-W	Argonne National Laboratory-West
ATWIR	Annual Transuranic Waste Inventory Report
AW	Materials and Fuels Complex (generator site prefix)
BC	Battelle Columbus (generator site prefix)
BN	AMWTP (generator site prefix)
CBFO	Carlsbad Field Office
CCP	Central Characterization Project
CH	contact-handled
CH-TRAMPAC	Contact-Handled Transuranic Waste Authorized Methods for Payload Control
CWS	Chemical Warfare Service
D&D	decommissioning and dismantling
DOD	U.S. Department of Defense
DOE	U.S. Department of Energy
DOHE	Drum Opening Hood Enclosure
DOS	drum opening station
DOT	U.S. Department of Transportation
DRS	Drum Repacking System
DU	depleted uranium
DWHE	Drummed Waste Handling Enclosure
DWPG	drummed waste packaging glovebox
EBR-II	Experimental Breeder Reactor II
EDMS	electronic document management system
EMOP	eight-drum metal overpack pallet
EPA	U.S. Environmental Protection Agency
EU	enriched uranium
EWR	early waste retrieval
FMF	Fuel Manufacturing Facility
HEPA	high efficiency particulate air
HENC	High-Efficiency Passive Neutron Counter
HLW	high-level waste
HRA	Hot Repair Area
HSG	headspace gas
HWMA	Hazardous Waste Management Act
HWN	hazardous waste number

IDC	item description code
IDR	initial drum retrieval
INL	Idaho National Laboratory
LA	Los Alamos National Laboratory (generator site prefix)
LANL	Los Alamos National Laboratory
LLD	lower limit of detection
LLNL	Lawrence Livermore National Laboratory
LSA	low specific activity
MD	Mound Plant (generator site prefix)
MEK	methyl ethyl ketone
MFC	Materials and Fuels Complex
MPFPD	Mixed Plutonium Finishing Plant Debris
NBL	New Brunswick Laboratory
NDA	non-destructive assay
NRF	Naval Reactors Facility
NWPA	Nuclear Waste Policy Act
PCB	polychlorinated biphenyl
PFP	plutonium finishing plant
PK	process knowledge
PMC	plutonium-molybdenum cermet
POS	Plant Optimization System
PPE	personal protective equipment
PPO	pressed plutonium oxide
R&D	research and development
RCRA	Resource Conservation and Recovery Act
RF	Rocky Flats Plant (generator site prefix)
RH	remote-handled
RL	Richland, Washington Hanford Site (generator site prefix)
RLMPFPCD	Richland Mixed Plutonium Finishing Plant Comprehensive Debris
RTG	radioisotopic thermoelectric generators
RTR	real-time radiography
RWMC	Radioactive Waste Management Complex
SCW	special-case waste
SD	pre-1980 INL-Exhumed SDA Waste (generator site prefix)
SDA	Subsurface Disposal Area
SDOP	six-drum overpack box
SMOP	six-drum metal overpack pallet
SNF	spent nuclear fuel
SWB	standard waste box

TRU	transuranic
TRUCON	TRU waste content codes
TSA-RE	Transuranic Storage Area-Retrieval Enclosure
TSCA	Toxic Substance Control Act
VE	visual examination
VOC	volatile organic compound
WAC	Waste Acceptance Criteria
WCA	Waste Characterization Area
WETP	WIPP experimental test program
WG Pu	weapons-grade plutonium
WIPP	Waste Isolation Pilot Plant
WMC	Waste Matrix Code
WMP	waste material parameter

Advanced Mixed Waste Treatment Project

Acceptable Knowledge Summary for Supercompacted Debris Waste

1.0 WASTE STREAM DESCRIPTION

1.1 Waste Stream Number

BN510.3.

1.2 Basic Waste Stream Information

1.2.1 Waste Stream Name

Supercompacted Debris Waste

1.2.2 Point of Generation

Advanced Mixed Waste Treatment Facility (AMWTF), Building WMF-676

1.2.3 Waste Stream Volume

Projected Volumes:

9,025 100-gallon drums (3,420 m^3) [88]

92 standard waste boxes (SWBs) (295 m^3) [78]

Fifty percent of the debris waste feedstock is estimated to contain greater than 100 nanocuries per gram (nCi/g) transuranic (TRU) alpha activity and 50% contains less than 100 nCi/g TRU alpha activity. [13]

1.2.4 Generation Dates and Rate of Generation

August 2013 – December 2018

The average generation rate for BN510.3 is currently estimated at 200 product drums (76 m^3) per month. [79]

1.2.5 TRUCON Codes

ID121 [2]

1.2.6 Waste Isolation Pilot Plant Waste Stream ID

Waste Stream ID: IN-BN510.3

1.2.7 Summary Category Group

S5000 – Debris Waste [3]

1.2.8 Waste Matrix Code Group

Heterogeneous Debris Waste

1.2.9 Waste Matrix Code

The BN510.3 waste stream is assigned the Waste Matrix Code (WMC) S5490 – Unknown/Other Heterogeneous Debris Category.

The unknown/other-heterogeneous WMC includes waste that is consistent with the definition for the Heterogeneous Debris (S5400), but does not meet the criteria for assignment into the S5410, S5420, S5440, S5450, or S5460 specific-detailed categories.[3] The waste stream consists of supercompacted debris waste.

1.2.10 Description from the Annual Transuranic Waste Inventory Report

The Annual Transuranic Waste Inventory Report (ATWIR) will be updated at the time of the next data call to include the following: BN510.3 waste stream is a newly generated debris waste stream generated from supercompacted 55-gallon containers of debris waste. [28]

1.2.11 Defense and WIPP Land Withdrawal Act Determination for AMWTP Waste

The BN510.3 supercompacted debris waste stream generated at the Advanced Mixed Waste Treatment Project (AMWTP) is a result of compaction of heterogeneous debris waste generated at the AMWTP (BN), Argonne National Laboratory-East (AE), Battelle Columbus (BC), Los Alamos National Laboratory (LA), Materials and Fuels Complex (AW), Mound (MD), Rocky Flats (RF), and the pre-1980 INL-exhumed Subsurface Disposal Area (SDA) waste (SD).[a] The debris waste identified as feedstock to the AMWTP Supercompactor originated from various defense-related sources that include: verification and control technology, weapons activities including defense inertial confinement fusion, defense nuclear waste and material by-products management, defense nuclear waste and materials security and safeguards and security investigations, naval reactors development, defense research and development, and defense nuclear materials production.

a. Hanford debris waste (previously identified with the generator prefix "RL") is no longer processed within the Supercompactor.

1.2.11.1 Defense Evaluation

The DOE/WIPP-02-3122, Transuranic Waste Acceptance Criteria for the Waste Isolation Pilot Plant (WIPP-WAC), requires generator sites to use acceptable knowledge (AK) to determine if the TRU waste streams to be disposed at WIPP meet the definition of TRU "defense" waste. Based on guidance from the U.S. Department of Energy (DOE), a TRU waste is eligible for disposal at WIPP if it has been generated, in whole or by part, by one or more of the activities listed in Section 42 U.S.C. 10101(3) of the Nuclear Waste Policy Act (NWPA) of 1982. The term "atomic energy defense activity" means any activity of the Secretary (of the U.S. Department of Energy) performed in whole or in part in carrying out any of the following functions: [11, 23, 24, 46]

- Naval reactors development
- Weapons activities, including defense inertial confinement fusion
- Verification and control technology
- Defense nuclear materials production
- Defense nuclear waste and materials by-products management
- Defense nuclear waste and materials security and safeguards and security investigations
- Defense research and development.

The BN510.3 supercompacted debris waste is comprised of heterogeneous debris wastes that were the result of one or more previously noted defense related activities at the following DOE sites:

- Rocky Flats
  - The TRU debris wastes generated at RF and shipped to the Idaho National Laboratory (INL) were generated through defense program activities, or commingled with non-defense program waste that cannot be segregated. Furthermore, there is no historical record or evidence of spent nuclear fuel (SNF) or high-level waste (HLW) ever having been handled at the RF facility. [6, 18]
- Mound
  - The majority of the MD debris waste was generated during defense-related operations conducted at the MD for a variety of customers, including Lawrence Livermore National Laboratory, Hanford, Oak Ridge National Laboratory, and the Space Program. Plutonium-238 heat sources were designed and developed for spacecraft, generators, and satellites used directly by the U.S. Department of Defense (DOD) or in support of DOD missions. One of the major space programs supported by MD was the

Space Nuclear Auxiliary Power System, which was sponsored by the DOD. Operations at the facility included processing and recovering plutonium, developing reactor fuels, conducting reactor fuel waste studies, and recovery of tritium and other isotopes for both DOD and domestic or private entities. The radioisotopic content (e.g., plutonium and other TRU isotopes of interest) of the MD debris waste is the result of commingling of wastes from both defense-related and domestic activities. Furthermore, there is no historical record or evidence of SNF or HLW ever having been shipped to the INL from the MD facility. [7, 19]

- Battelle Columbus
  - Debris waste feedstock shipped from BC to the INL was generated during decommissioning and dismantling (D&D) of the JN-3 (Research Reactor Building) and other facilities. Defense-related operations were conducted at BC in support of Army, Navy, and Air Force programs. These operations included weapons-related activities and defense research into plutonium materials properties and development, plutonium metallurgy, actinide joining, and weapons production and assembly. Processing of test shot samples, development of ^{238}Pu heat sources for spacecraft for DOD, and some specialized work for Los Alamos were conducted in the JN-4 Plutonium Laboratory. In addition, there is no historical record or evidence of SNF or HLW ever having being shipped to the INL from the BC facility. [8, 20, 21, 22]

- Argonne National Laboratories–East
  - AE is a multidisciplinary research laboratory that performs work in basic and applied science in the areas of engineering, energy technology, chemistry, physics, materials, biomedicine, and environmental studies. AE has been instrumental in the development of nuclear reactors and associated systems, materials, fuel elements, and components for use in both civilian and defense programs. This work included key participation in the development of essentially all the domestic nuclear reactor systems in use today for isotope production, power generation, and naval submarine propulsion, as well as experimental or proposed applications for weapons destruction, defense waste management, defense security and safeguards, and space propulsion. The New Brunswick Laboratory (NBL), located on the AE campus, serves as the technical extension of the U.S. DOE Office of Safeguards and Security in the areas of nuclear material control and accountability, safeguards, and nonproliferation.[52, 61]
    - Commingling of waste occurred at AE because waste was often generated in small volumes (i.e., less than 55 gallons) and numerous waste items were placed together in the same container either at the generator level and/or during repackaging. AE waste generators routinely commingled waste with no segregation of defense from non-defense waste. In addition, waste materials generated during the ongoing destructive examination of materials from

different programs and contamination from fuel cutting/grinding/polishing activities also occurred within the hot cell examination area. [52, 61]

- AE contact-handled (CH) wastes do not contain intact irradiated fuel pin test specimens and do not contain test residues, test materials, and the resultant test fragments from the fuel pin test specimens (including irradiated pin fragments and dispersed particulates [fines and dust]).[52] These wastes were managed as remote-handled (RH) waste. While AE performs research and experiments on fuel-bearing specimens, it does not possess or manage spent fuel elements. The research laboratory operations were not production operations involving the separation or reprocessing of constituent elements from reactor fuel and the CH waste does not include the high level fission products. These types of wastes were managed separately as RH waste. The CH debris waste is not SNF or HLW. [52, 61]

- Materials and Fuels Complex

  - The atomic energy defense activities that apply to the TRU wastes generated by the Materials and Fuels Complex (MFC) are naval reactors development, defense nuclear materials productions, and defense research and development (R&D). Defense-related research activities include continuing development of advanced reactor concepts, fuel cycle process development, as well as development of homeland security research, decontamination and decommissioning technologies, and reactor and fuel cycle safety. MFC has engaged in the same or similar waste-generating activities throughout its operation. Specific examples of defense related activities include the following:[58, 62]

    - Analysis of plutonium for gallium content
    - Laboratory services for Knolls Atomic Power Laboratory and Argonne National Laboratory–East (ANL-E)
    - Analytical support for the Naval Reactors Facility (NRF) was conducted from June 2000 to October 2004
    - Lawrence Livermore National Laboratory (LLNL) plutonium oxide disk fabrication
    - Experimental Breeder Reactor (EBR)-II fuel and experiments analysis.

    Based on the AK review of the MFC process knowledge (PK) documentation and communication with MFC personnel relating to waste-generating processes, the CH-TRU wastes generated at the MFC in the Analytical Laboratory/Casting Laboratory (AL/CL), Fuel Manufacturing Facility (FMF), and Hot Repair Area/Waste Characterization Area (HRA/WCA) were classified as defense-related wastes. All of the sampled waste that was repackaged in the HRA/WCA was

generated from defense sites, principally Rocky Flats, and, because of the use of shared facilities throughout MFC, may have been inherently commingled with non-defense waste in the HRA/WCA. CH-TRU waste generated at MFC in the FMF (B704), AL/CL (B752), and HRA/WCA (B785) and shipped to the AMWTP is generated from a variety of defense and non-defense related activities associated with processing of radioisotopes in development of nuclear fuel, spent fuel disposition technology, liquid metal technology, nuclear waste stabilization, and new storage technologies for spent fuel and highly radioactive materials. In addition, TRU debris waste is generated within gloveboxes from laboratory support for waste and nuclear material characterization via sample preparation and analyses. Debris waste generated within these gloveboxes is inherently commingled at the point of generation. Only defense related waste and commingled defense/non-defense CH-TRU waste are accepted at the AMWTP for subsequent disposal at WIPP. Defense and non-defense wastes are not intentionally mixed within TRU debris waste shipped to AMWTP. Non-defense related waste that is not inherently commingled with defense-related waste at the point of generation is not shipped to AMWTP. [58, 62]

Processing of intact spent fuel is not conducted in the AL/CL, FMF, or HRA/WCA. While MFC analytical operations may have provided support for analysis of irradiated sample fuel material and/or may have contained fuel waste materials that could be classified as waste incidental to reprocessing, the analytical waste received from MFC does not meet the classification of waste that are incidental to reprocessing. In addition, the MFC analytical waste does not consist of intact fuel elements. Historically, all HLW generated at MFC has been segregated, packaged in appropriately shielded containers, and stored in an onsite HLW storage facility. The Argonne National Laboratory-West (ANL-W)/MFC waste received at the AMWTP is not SNF or HLW and is classified as defense-related waste. [58, 62]

- Subsurface Disposal Area (Pre-1980)

  - From 1954 until 1970, the INL SDA received and disposed of a variety of radioactive waste (including TRU wastes) from multiple sources. The wastes disposed of into the SDA were both defense and non-defense waste. Defense-related wastes initially disposed of within INL Radioactive Waste Management Complex (RWMC) SDA Pits and Trenches were from process and defense-related activities such as: verification and control technology, weapons activities including defense inertial confinement fusion, defense nuclear waste and material by-products management, defense nuclear waste and materials security and safeguards and security investigations, Naval reactors development, defense research and development and defense nuclear materials production. Examples of non-defense waste disposed into the INL RWMC SDA include: civilian reactor wastes, medical wastes, United States Geological Service waste, Colorado School of Mines waste, and wastes from various universities. [72]

- The debris waste associated with the SDA was generated as a result of pre-1980 exhumations within specific INL pits and trenches. During the mid to late 1970s, the INL conducted two SDA exhumations that resulted in the generation of TRU waste and subsequent transportation to the Transuranic Storage Area-Retrieval Enclosure (TSA-RE). The Early Waste Retrieval (EWR) Project from 1976 through 1978 associated with Pits 1 and 2, Trenches 1, 5, 7, 8, 9, and 10. Of the four pre-1980 ER investigations, only two resulted in waste being exhumed and transferred to the TSA-RE. The two INL SDA exhumations that contributed waste to the TSA-RE were associated with the INL Initial Drum Retrieval (IDR) Project, and the INL EWR Project. There is no supporting AK retrieval evidence that indicates unused cyanide wastes were generated and placed in the AMWTP inventory as a result of IDR or EWR retrieval investigations.[72] Segregation practices of defense and non-defense related waste was not employed during the 1970 exhumations.

- Due to the condition of some of the exhumed containers and management practices employed during the retrieval operations, the contents of INL exhumed repackaged waste within the TSA RE are assumed to be a composite of the INL SDA waste contributors. While certain TRU waste items may not have been generated directly from defense activities; based on the activities described above and the inability to separate civilian waste from defense waste, the waste is eligible for disposal at WIPP as a commingled defense waste stream generated "in part" by the atomic energy defense activities. [72, 76]

- The debris waste generated during the pre-1980 exhumation activities are not classified as SNF or HLW. SNF and HLW are not candidates for supercompaction. If found, SNF and HLW will be segregated and managed separately until final disposition determinations are conducted. [72]

- Los Alamos National Laboratory

  - The waste received from LANL for purposes of processing within the AMWTP Supercompactor is generated from defense nuclear materials production, defense nuclear waste and materials by-products management, and/or defense research and development activities. In accordance with interim guidance, defense wastes also include those wastes generated during work involving only defense activities, or during work in which defense and non-defense wastes were mixed in the past and from which the non-defense portion cannot be segregated. [82, 83] Debris waste received from LANL has been generated directly from defense activities and/or is based on the activities described above and the inability to separate civilian waste from defense waste. In addition, the waste is not SNF or HLW. As such, the waste is eligible for disposal at WIPP as a defense waste stream.[23, 24, 82, 83]

- Advanced Mixed Waste Treatment Facility
    - The waste generated at the AMWTF (WMF-676) is the result of contact with defense-related TRU debris waste during treatment, characterization, maintenance, repackaging, and management.(5)

In accordance with interim guidance, defense wastes include those wastes generated during work involving only defense activities, or during work in which defense and non-defense wastes were inadvertently mixed in the past and from which the non-defense portion cannot be segregated. Based on the AMWTP's AK documentation for the Supercompactor feedstock waste, the BN510.3 waste stream is defense-related waste.(5, 6, 7, 8, 18, 23, 24, 36, 46, 61, 62, 63, 72, 74, 76, 83, 84, 85, 87, 89, 90)

1.2.11.2 Land Withdrawal Act Evaluation

Public Law 102-579, WIPP Land Withdrawal Act, prohibits the disposal of SNF and HLW as defined by the NWPA at WIPP. According to the NWPA, SNF is defined as "fuel that has been withdrawn from a nuclear reactor following irradiation, the constituent elements of which have not been separated by reprocessing." (46, 63)

In addition, the DOE Radioactive Waste Management Manual expands on this definition to clarify that test specimens of fissionable material irradiated for research and development only, and not production of power or plutonium, may be classified as waste, and managed in accordance with the requirements of this Order (i.e., DOE O 435.1, Radioactive Waste Management) when it is technically infeasible, cost prohibitive, or would increase worker exposure to separate the remaining test specimens from other contaminated material.(41)

High-level waste is defined by the NWPA as "the highly radioactive material resulting from the reprocessing of SNF, including liquid waste produced directly in reprocessing and any solid material derived from such liquid waste that contains fission products in sufficient concentrations, and other highly radioactive material that the Commission, consistent with existing law, determines by rule requires permanent isolation." (46)

Based on the AMWTP's AK documentation for the Supercompactor feedstock wastes, the BN510.3 waste stream does not meet the definition of HLW or SNF. (5, 6, 7, 8, 61, 62, 72, 73, 74, 76, 83, 84, 85, 87, 89, 90)

1.3 Waste Stream Description

1.3.1 BN510.3 Supercompacted Debris Waste

The BN510.3 newly generated debris waste stream is generated from supercompaction of 55-gallon containers of debris waste. The Waste Stream Profile Form for BN510.3 was developed due to the addition of SD feedstock debris waste and the addition of the D033 (hexachlorobutadiene) hazardous waste number that was not assigned to the BN510.2 waste

stream. [58] The addition of LA wastes to the Supercompactor has been approved by the U.S. Environmental Protection Agency (EPA) through the EPA Tier process and does not result in any additional HWNs. [89] Generation of the BN510.2 waste stream has been discontinued as a result of Carlsbad Field Office approval of the BN510.3 waste stream and subsequent processing of SD debris waste into the Supercompactor. [90]

The supercompacted debris waste (i.e., BN510.3) has a common physical form that contains similar hazardous constituents and is generated from a single process or activity (Table 1).

A list of approved feedstock debris (by generator and item description code [IDC]) is presented in Appendix A, Approved Feedstock Debris Waste by Original Generator and IDC. [90]

Table 1. Physical waste form description for BN510.3.

ATWIR Number	IDC	Waste Matrix Code (WMC)	Description
IN-BN510.3	BN-550	S5490	Debris waste from multiple debris waste feedstock sources that have been supercompacted into pucks and packaged into 100-gallon drums.[a]

a. A list of debris waste feedstock IDCs is presented in Appendix A of this report.

The BN510.3 waste stream consists of various combustible and noncombustible debris materials that originated from AE, AW, BC, LA, MD, RF, and SD, as well as AMWTP self-generated non-polychlorinated biphenyl (PCB) debris waste within WMF-676. [5, 6, 7, 8, 52, 53, 58, 66, 72, 82, 90]

The BN510.3 supercompacted debris waste includes heterogeneous debris such as: paper and rags; gloves; wipes; asbestos; personal protective equipment (PPE); plastic and rubber items; filters; leaded gloves, aprons, bricks, and sheeting; metal with and without lead or cadmium; floor tiles, piping, sheet rock, insulation, and glass; raschig rings; crucibles; fire brick; wood; Plexiglas®; Benelex®; pieces of equipment and tools; lab waste; D&D waste; resins; graphite; grit; aerosol cans; asphalt and concrete packaged in 55-gallon drums, supercompacted, and packaged into 100-gallon product drums. Supercompacted debris may contain small amounts of non-debris waste such as absorbed liquids, soil, dirt, sand, absorbent, or homogeneous solids. Non-debris waste will be less than 50% by volume in each 55-gallon drum of compacted debris. [5, 6, 7, 8, 52, 58, 72, 84, 85]

1.4 Process Description

See waste generation process description in Section 1.4.3.

1.4.1 Areas of Operation

The BN510.3 waste stream is generated by supercompaction of debris waste feedstock at the AMWTF in Building WMF-676. [9, 29, 54, 55, 68, 70]

1.4.2 Process Flow Diagram

Figure 1 presents a flow diagram illustrating the generation and processing of AMWTP supercompacted debris waste.

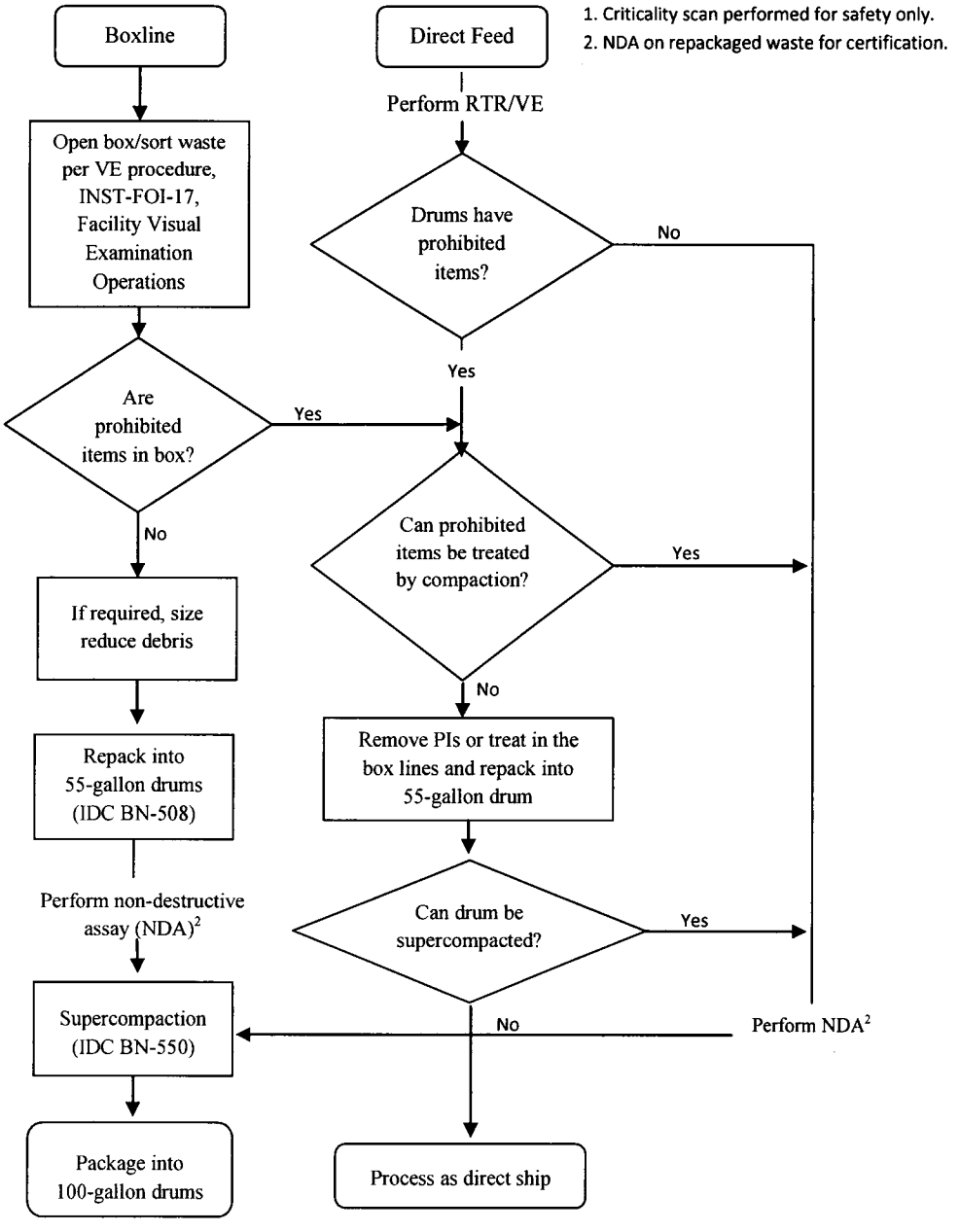

Figure 1. Flow diagram illustrating the generation and processing of AMWTP supercompacted debris waste.

1.4.3 Waste Generating Process

1.4.3.1 BN510.3 Supercompaction Process

The AMWTP waste generation process is supercompaction of individual 55-gallon drums of debris waste feedstock into pucks (the final waste form). Debris waste feedstock contained in 55-gallon drums is characterized and validated through radioassay and real-time radiography (RTR)/visual examination (VE) to verify contents and then sent directly to the Supercompactor for processing. [10, 31, 32, 33, 34]

Debris waste feedstock containers (e.g., 55- or 85-gallon drums) may be introduced into WMF-676 for container and waste management. Waste container preparation, handling, and repackaging are conducted in the WMF-676 Drum Repack System (DRS). The DRS consists of the drummed waste handling enclosure (DWHE), the drum opening hood enclosure (DOHE), which includes the drum opening station (DOS) and the drummed waste packaging glovebox (DWPG), and the special-case waste (SCW) glovebox.[75] Boxes of waste, including overpack boxes, undergo assay and are introduced into a box line for sorting and repackaging into 55-gallon drums. [67] The overpack boxes with uncharacterized drums undergo RTR to confirm the waste is >50% debris in each drum. [10, 31, 57] The drum contents are then visually examined in the box line trough to confirm the waste is approved feed stock.[9] The legacy retrieved boxed wastes undergo RTR to confirm the waste form is approved feed stock. Certified VE is performed on the waste processed in the box line as IDC BN-508. Prohibited items that can be treated may be treated in the box line or sent to the special-case waste (SCW) glovebox. If applicable, after treating, sorting, and/or removal of prohibited item(s), the waste is repackaged into 55-gallon drums as IDC BN-508. [9, 10, 46] No campaigning of approved feedstock type or generator site debris waste feedstock occurs during the supercompaction process. Cleanouts of the box line(s) occur for periodic housekeeping or potential PCB cleanups or to prevent cross-contamination. [9, 53, 54, 55] Repackaged waste drums and direct feed drums (not requiring repack) are fed into the Supercompactor.

The Supercompactor is a glovebox with a 2,000-ton capacity compactor. The Supercompactor size-reduces 55-gallon waste drums to roughly one-fifth their normal size. The supercompacted drums (pucks) are then packaged into 100-gallon containers (puck drums).

The debris waste feedstock is introduced into the Supercompactor as any of the following:

- Direct feed (in original 55-gallon drums from the generator site)
- From the WMF-676 DRS (e.g., DWPG) where containerized waste can be un-overpacked, treated, sorted, or repackaged
- From the waste treatment box line(s) where boxed waste is treated, sorted, size-reduced, and repackaged into 55-gallon drums.

The boxed waste includes multi-drum overpacks (six-drum overpack boxes [SDOPs], eight-drum metal overpack pallets [EMOPs], and six-drum metal overpack pallets [SMOPs]) containing up to eight 55- or six 85-gallon drums). An SDOP is a six-drum overpack wood box, an EMOP is an eight 55-gallon drum metal pallet, and an SMOP is a six 85-gallon drum metal pallet. The multi-drum overpacks are of two types: [10, 31, 56, 57]

(1) The first type is packaged with characterized debris drums for processing in AMWTF. These contain drums with IDCs confirmed by RTR or VE to be approved feedstock debris waste.

(2) The second type is packaged with drums that are not characterized but are labeled with historical AK information that indicates approved feedstock debris waste.

Legacy retrieved boxes from the generators include Sandia steel boxes, bins, fiberglass reinforced plywood boxes, and cake boxes.

After compaction, the drum pucks are loaded into the final 100-gallon drums (IDC BN-550) for shipment to WIPP. [9] No additional chemicals or waste constituents are added to the supercompacted debris waste as a result of this process.

Debris waste generated during WMF-676 maintenance, hot maintenance cell size reduction, repackaging, and VE is also included in the Supercompactor feedstock. This facility-generated waste is visually examined. AMWTP does not add additional hazardous chemicals or waste constituents to the supercompacted debris waste as a result of this process. [10, 29, 54, 55, 56, 68]

The plant optimization system (POS) is used to optimize processing drums through the Supercompactor to produce 100-gallon drums (containing compacted drum pucks) to meet the WIPP Waste Acceptance Criteria (WAC). [4, 9, 26]

1.4.4 Material Inputs

The BN510.3 supercompacted debris waste includes heterogeneous debris such as paper and rags; gloves; wipes; asbestos; PPE; plastic and rubber items; filters; leaded gloves, aprons, bricks, and sheeting; metal with and without lead or cadmium; floor tiles; piping; sheet rock; insulation; glass; raschig rings; crucibles; fire brick; wood; Plexiglas®; Benelex®; pieces of equipment and tools; lab waste; D&D waste; resins; graphite; grit; aerosol cans; asphalt and concrete from multiple DOE sites (i.e., AE, AW, BC, BN, LA, MD, RF and SD) that are approved Supercompactor feedstock. [6, 7, 8, 28, 52, 58, 72, 82, 84, 85, 86, 87, 90, 91] Graphite may be part of the feedstock but does not make up >1% by weight of the feedstock in this waste stream. Supercompacted debris may contain small amounts of non-debris waste such as absorbed liquids, soil, dirt, sand, absorbent, or homogeneous solids. Non-debris waste will be less than 50% by volume in each 55-gallon drum of compacted debris.

The AMWTP retrievably-stored feedstock debris waste was generated at the AE, AW, BC, LA, MD, RF, and SD. The feedstock debris waste was generated during plutonium pit production; depleted uranium component fabrication; enriched uranium processing; support operations including radionuclide recovery, waste treatment, maintenance, laboratory analysis, and machining of non-nuclear weapon components; R&D; special order work; fabrication of ^{238}Pu heat sources and manufacture of radioisotopic thermoelectric generators; D&D activities; and materials development. (6, 7, 8, 52, 58, 72, 82, 90)

The BN debris waste feedstock is generated as a result of AMWTP waste facility maintenance operations, treatment (i.e., supercompaction, absorption of prohibited liquids, and removal of prohibited items), characterization, and general container management activities. (5)

The waste contributions into the BN510.3 waste stream originated at the following DOE facilities operations: (5)

- RF
  - Plutonium metal and plutonium-containing materials manufacture, recovery, and treatment (6)
  - Plutonium production support operations including maintenance, laboratory activities, and R&D (6)
  - Non-routine events including renovations, spills, fires, and decommissioning (6)
  - Construction, demolition, and D&D operations. (6)
- MD
  - D&D of the Mound Plant Facility (7)
  - Pressed plutonium oxide (PPO) sphere and plutonium-molybdenum cermet (PMC) production (7)
  - Plutonium and other isotopic recovery (7)
  - Plutonium manufacture support such as laboratory activities and R&D (7)
  - Facility maintenance. (7)
- BC
  - Research into the metallurgical and ceramic properties of plutonium and its alloys (8)
  - Plutonium processing (8)
  - Development of nuclear fuels (8)
  - D&D of the BC facilities. (8)

- AE
  - Support activities associated with the development and testing of various breeder reactor systems [52]
  - Laboratory operations associated with R&D/DOE waste management and supporting the examining/evaluating of nuclear fuel [52]
  - Repackaging activities [52]
  - Decontamination and decommissioning activities [52]
  - General plant operations including waste management and maintenance. [52]
- AW
  - Recovery of actinides such as plutonium and other radionuclides and characterization of nuclear materials [58]
  - Experimental fabrication of fuel rods, rodlets, slugs, and blankets [59]
  - Transmutation of actinides experiments in support of DOE programs (e.g., Advanced Fuel Cycle Initiative [AFCI], naval reactor, Generation IV Nuclear Reactor, and Space Nuclear Programs) using the recovered plutonium and other actinides [58]
  - Maintenance and decontamination of related equipment and gloveboxes [59]
  - Characterization of WIPP candidate CH-TRU waste (non-radionuclide processing), i.e., headspace gas sampling, visual examination, coring and sample collection. [59]
- SD
  - Pre-1980 INL SDA exhumations. [72]
- LA
  - Defense nuclear materials production [82]
  - Defense nuclear waste and materials by-products management [82]
  - Defense research and development. [82]
- BN
  - Characterization activities [5]
  - Repackaging activities [5]
  - Waste treatment activities including size reduction of large items, supercompaction, absorption of prohibited liquids, and removal of prohibited items [5]

- Facility operations including waste management and maintenance. (5)

The feedstock debris waste received and stored at the AMWTP is packaged in 55- or 85-gallon drums and a variety of boxes, bins, and crates. These boxes, bins, and crates are constructed of metal, plywood, or fiberglass-reinforced plywood and processed in the box lines. Drums of waste may also be packaged in overpack boxes for feedstock to the box lines for processing.

The types of feedstock debris waste containers are as follows:

- Direct feed 55-gallon drums identified by generator (AE, AW, BC, BN, MD, RF, and SD) assigned IDCs
- Boxed debris waste from AE, AW, BC, BN, LA, MD, RF, and SD that is processed in the box line. (75)

The direct feed 55-gallon feedstock debris waste containers retain their generator assigned IDCs until compaction. (1)

1.4.4.1 Supporting AK Documents

The AK document for AMWTP waste, RPT-TRUW-06, Acceptable Knowledge Document for AMWTP Waste, (5) was compiled to provide AK for the AMWTP newly-generated wastes in accordance with MP-TRUW-8.13, Collection, Review, and Management of Acceptable Knowledge Documentation. (12) RPT-TRUW-56, Acceptable Knowledge Document for INL Stored Transuranic Waste – Rocky Flats Plant; RPT-TRUW-13, Acceptable Knowledge Document for INL Stored Waste–Mound Plant Waste; RPT-TRUW-04, Acceptable Knowledge Document for the Battelle Columbus Laboratories Building JN-4 Plutonium Laboratory; RPT-TRUW-89, Acceptable Knowledge Document for Argonne National Laboratory-East Waste; RPT-TRUW-79, Acceptable Knowledge Document for Materials and Fuels Complex Waste; and RPT-TRUW-82, Acceptable Knowledge Document for Hanford Debris Waste Shipped to AMWTP;[b] RPT-TRUW-91, Acceptable Knowledge Document for Pre-1980 INL-Exhumed SDA Waste; and RPT-TRUW-93, Acceptable Knowledge Document for Los Alamos National Laboratory are the AMWTP AK documents for the RF, MD, BC, AE, AW, RL, SD, and LA facilities, respectively. (6, 7, 8, 28, 52, 58, 72, 82, 90)

The flow of the AMWTP AK documentation is presented in Figure 2.

b. RPT-TRUW-82 is cited solely for contribution to the F-listed HWN assignment.

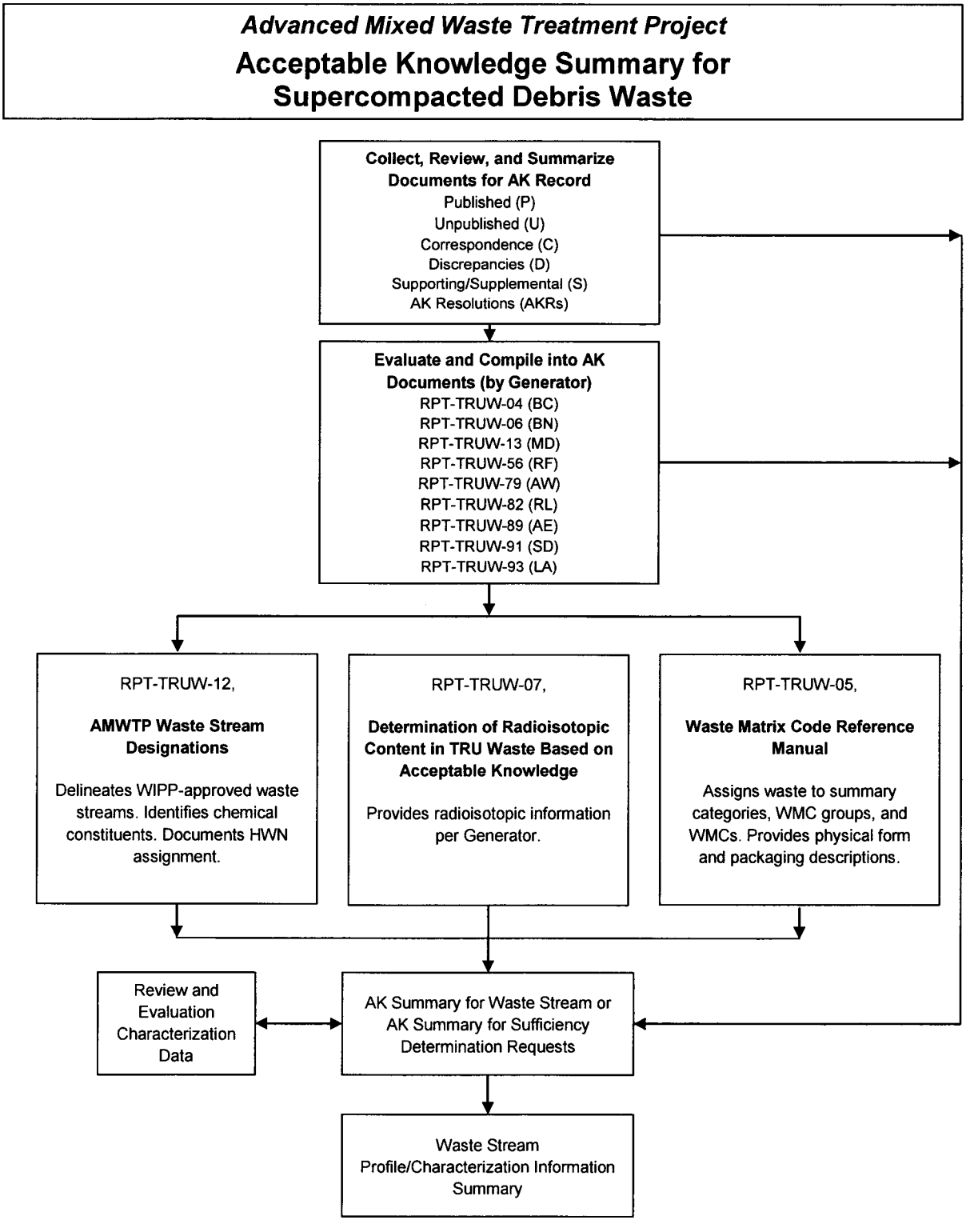

Figure 2. Document hierarchy and information flow for AK.

1.4.5 Waste Material Parameters

1.4.5.1 BN510.3 Supercompacted Debris Waste

The estimated waste material parameter (WMP) weight percentages for the BN510.3 waste stream are based on the VE data for BN510.1 100-gallon product drums generated from July 2, 2010, through September 9, 2013. WMP data for 9,137 containers with completed RTR/VE data from the BN510.1 waste stream were obtained from the AMWTP Waste Tracking System database for containers. The WMP weight parameters based on BN510.1 data are representative of the BN510.3 waste stream. The estimated WMP weights (by percent) for the BN510.3 waste stream were calculated in accordance with the requirements of MP-TRUW-8.13. The WMPs for BN510.3 are summarized in Table 2. [12, 45, 90, 92]

Table 2. Waste material parameters for BN510.3. [45, 90, 92] c

Waste Material Parameters	Estimated Percent WMP Weight/Unit Waste
Iron-based Metals/Alloys	74
Aluminum-based Metals/Alloys	<1
Other Metals	1
Other Inorganic Materials	2
Cellulosics	15
Rubber	1
Plastics (waste materials)	7
Inorganic Matrix	<1
Organic Matrix	<1
Soils/Gravel	<1

1.5 AK Sufficiency Determination

No AK sufficiency determinations apply to this waste stream.

c. No significant changes to the WMPs are expected as a result of adding LANL debris waste to the Supercompactor.[92]

1.6 Prohibited Items

The following items are prohibited in waste containers shipped to WIPP as documented in MP-TRUW-8.1, Certification Plan for INL Transuranic Waste, and MP-TRUW-8.2, Quality Assurance Project Plan. [4, 26]

- Liquid waste and prohibited observable liquids
- Sealed containers greater than 4 liters
- Non-radionuclide pyrophoric materials
- Hazardous wastes not occurring as co-contaminants with TRU mixed wastes
- Wastes incompatible with backfill, seal and panel closure materials, container and packaging materials, shipping container materials, or other wastes
- Wastes containing explosives or compressed gases
- Wastes with PCBs not authorized under an EPA PCB waste disposal authorization
- Wastes exhibiting the characteristic of ignitability, corrosivity, or reactivity (hazardous waste numbers [HWNs] D001, D002, or D003)
- Waste that has ever been managed as high-level waste and waste from tanks specified in Table C-5 (MP-TRUW-8.2, Section C-1c), unless specifically approved through as WIPP RCRA Permit Modification
- High-level waste and SNF as identified in the WIPP Land Withdrawal Act (and as defined in the Nuclear Waste Policy Act of 1982). [46, 63]
- Any waste container from a waste stream which has not undergone either radiographic or visual examination of statistically representative subpopulation of the waste stream.

Supercompaction is the treatment for unprotected sharp objects and sealed containers greater than 4 liters that do not contain prohibited liquids. Because there are no layers of confinement following supercompaction, it is also the treatment for excess layers of confinement.

Feedstock debris wastes that are identified as containing prohibited items during RTR or by VE during box line processing of wastes are treated in the box line, treated by supercompaction, have the prohibited item(s) removed, or are rejected, as appropriate.

Box line(s) are used to VE and repackage the boxed debris waste into 55-gallon drums. Debris waste treated, repackaged, or examined in the WMF-676 DRS (e.g., DWPG), and waste from maintenance and cleanup activities, are packaged according to procedures, subjected to RTR/VE, and undergo nondestructive assay. [33] These drums are then supercompacted and the

pucks packaged into a 100-gallon product drum. The final 100-gallon Supercompactor product drums are identified as AMWTP IDC BN-550. [9, 10, 77, 90, 91]

Prohibited items that can be treated to remove the prohibited characteristic are managed as newly-generated waste. Containers with WIPP-prohibited liquids may be treated using the following non-hazardous materials: Aquaset®, Aquaset II-G®, Petroset II® or Petroset IIG®, Micro-Cel® E, PIG®, or SP-400® absorbents or Hg Absorb for mercury to render the waste acceptable prior to shipment. [37, 38, 47, 48, 49, 51, 64] Newly-generated waste is characterized and assigned to an appropriate waste stream. [4, 26] In the event the treatment renders an acceptable debris waste form that can be compacted, it is included in this waste stream as IDC BN-508.

Prohibited items may be treated in the box lines or processed in the SCW glovebox. [9, 10, 26, 29, 54] Nonhazardous pressurized fire extinguishers or other approved pressurized large cylinders may be vented by a controlled release in the box lines. Box line processes may perform absorption of free liquids in accordance with approved methods. SCW treatment includes management of containers with liquids, pressurized containers, collected free liquids, collected residual liquids, and elemental mercury in accordance with approved methods. After treating, sorting, and/or removal of prohibited item(s), the waste is repackaged into 55-gallon drums as IDC BN-508 if greater than 50% debris by volume. [9, 10, 46 , 54, 70]

Some prohibited items are approved for treatment by supercompaction. [60] Supercompaction of 55-gallon drums is the treatment for unprotected sharp objects, pressurized aerosol cans that contain a total liquid volume confirmed by RTR of less than or equal to 49 mL, mixed waste containers with an observable liquid volume confirmed by RTR of not greater than 5% by volume of the waste container, and sealed containers greater than 4 liters. [31, 43, 59, 60, 65, 71] Because there are no layers of confinement following supercompaction, it is also the treatment for excess layers of confinement. [9, 10, 26, 64, 65]

Drums of direct feedstock debris waste identified during RTR/VE as containing PCB items are segregated or sent to DWPG or SCW for item removal. [1, 16, 29, 30, 54] PCB items identified in boxed debris are removed during box line operations. PCB-contaminated waste identified during box line processing is cleaned up in accordance with applicable AMWTP procedures. [53] PCB items removed from feedstock debris waste drums and boxes or generated during the box line PCB cleanup operation are packaged as newly-generated waste and are not authorized as part of this waste stream.

None of the supercompacted debris 100-gallon product drums (BN-550) shipped to WIPP will contain prohibited items.

1.7 Resource Conservation and Recovery Act Determination

The BN510.3 waste is (and has been) subject to the State of Idaho Hazardous Waste Management Act (HWMA)/Resource Conservation and Recovery Act (RCRA) requirements (e.g., 40 CFR 264, Standards for Owners and Operators of Hazardous Waste Treatment, Storage, and Disposal Facilities, and 40 CFR 265, Interim Status Standards for Owners and Operators of

Hazardous Waste Treatment, Storage, and Disposal Facilities) and is currently being managed under the AMWTP RCRA-permitting requirements until it is shipped offsite. [43, 44]

1.7.1 BN510.3 Supercompacted Debris Waste

1.7.1.1 EPA Hazardous Waste Numbers

The BN510.3 supercompacted debris waste is characterized as mixed TRU waste. The HWNs assigned to this waste stream include HWNs associated with the feedstock debris waste as originally compiled in AMWTP AK documents. [5, 6, 7, 8, 28,30, 52, 58, 72, 77, 82, 84, 85, 87, 90, 91]

Toxicity characteristic HWNs applied to the repackaged debris waste are:[1, 5, 6, 7, 8, 28, 30, 52, 58, 72, 77, 82, 84, 85, 87, 90, 91]

D004 (arsenic), D005 (barium), D006 (cadmium), D007 (chromium), D008 (lead), D009 (mercury), D010 (selenium), D011 (silver), D022 (chloroform), D027 (1,4 dichlorobenzene), D028 (1,2-dichloroethane), D029 (1,1 dichloroethylene), D030 (2,4 dinitrotoluene), D032 (hexachlorobenzene), D033 (hexachlorobutadiene), D034 (hexachloroethane), D037 (pentachlorophenol), and D043 (vinyl chloride).

Listed HWNs applied to this waste stream are: [1, 5, 6, 7, 8, 28, 30, 52, 58, 72, 77, 82, 84, 85, 87, 90, 91]

F001: 1,1,1-trichloroethane, 1,1,2-trichloro-1,2,2-trifluoroethane, 1,1,2,2-tetrachloro-1,2 difluoroethane, carbon tetrachloride, methylene chloride, tetrachloroethylene, trichloroethylene, and, trichlorofluoromethane

F002: 1,1,1-trichloroethane, 1,1,2-trichloro-1,2,2-trifluoroethane, 1,1,2-trichloroethane, 1,2-dichlorobenzene, chlorobenzene, methylene chloride, tetrachloroethylene, trichloroethylene, and trichlorofluoromethane

F004: cresols, cresylic acid, and nitrobenzene

F005: 2-ethoxyethanol, 2-nitropropane, benzene, carbon disulfide, isobutanol, methyl ethyl ketone (MEK), pyridine, and toluene

F006, F007, and F009: electroplating waste.

The HWNs assigned to the BN510.3 wastes generated in the WMF-676 facility as a result of supercompaction are derived from the compilation of all EPA HWNs assigned to the approved feedstock debris waste from the contributing generator sites (Table 3). The RL waste is no longer processed as feedstock and has been shipped. Table 3 only identifies the F-listed HWNs and constituents based on the RCRA mixture and the derived from rules. [5, 6, 7, 8, 28, 39, 40, 42, 52, 58, 72, 77, 82, 84, 85, 87, 90, 91]

Table 3. HWN assignment by generator site for BN510.3.

Generator Site/Activity	Arsenic D004	Barium D005	Cadmium D006	Chromium D007	Lead D008	Mercury D009	Selenium D010	Silver D011	Chloroform D022	1,4-Dichlorobenzene D027	1, 2-Dichloroethane D028	1,1-Dichloroetthylene D029	2,4-Dinitrotoluene D030	Hexachlorobenzene D032	Hexachlorobutadiene D033	Hexachloroethane D034	Pentachlorophenol D037	Vinyl Chloride D043	Spent Solvents F001	Spent Solvents F002	Spent Solvents F004	Spent Solvents F005	Electroplating waste F006 F007 F009
Rocky Flats (RF) [6]																							
Isotope recovery [b]	•	•	•	•	•	•	•	•															
Laboratory reagents, research	•	•	•	•	•	•	•	•	•													• [a]	
Degreasing, decontamination																			• [a]	• [a]			
Cleaning, spill clean up																						• [a]	
Electroplating																							• [a]
Based on AK/HSG											•	•											
Mound Plant (MD) [7]																							
PPO & PMC production and isotope recovery [b]	•	•	•	•	•	•	•	•															
Cleaning and degreasing																			• [c]	• [c]		• [c]	
Electroplating																							• [c]
Based on AK/HSG									•			•											

Table 3 (continued)

Activity	Arsenic D004	Barium D005	Cadmium D006	Chromium D007	Lead D008	Mercury D009	Selenium D010	Silver D011	Chloroform D022	1,4-Dichlorobenzene D027	1, 2-Dichloroethane D028	1,1-Dichloroetthylene D029	2,4-Dinitrotoluene D030	Hexachlorobenzene D032	Hexachlorobutadiene D033	Hexachloroethane D034	Pentachlorophenol D037	Vinyl Chloride D043	Spent Solvents F001	Spent Solvents F002	Spent Solvents F004	Spent Solvents F005	Electroplating waste F006 F007 F009
Battelle Columbus (BC) [8]																							
Metallurgical research		•	•	•	•	•		•															
Cleaning and degreasing																			• [d]	• [d]		• [d]	
Argonne National Laboratory – East (AE) [52]																							
Laboratory Operations [e]	•	•	•	•	•	•	•	•		•	•	•	•				•			• [e]	• [e]	• [e]	
Research Generated [e]	•	•	•	•	•	•	•	•		•	•	•	•				•			• [e]	• [e]	• [e]	
D&D [e]	•	•	•	•	•	•	•	•		•	•	•	•				•			• [e]	• [e]	• [e]	
Based on AK/HSG [e]	•	•	•	•	•	•	•	•		•	•	•	•				•			• [e]	• [e]	• [e]	

Table 3 (continued)

Activity	Arsenic D004	Barium D005	Cadmium D006	Chromium D007	Lead D008	Mercury D009	Selenium D010	Silver D011	Chloroform D022	1,4-Dichlorobenzene D027	1, 2-Dichloroethane D028	1,1-Dichloroetthylene D029	2,4-Dinitrotoluene D030	Hexachlorobenzene D032	Hexachlorobutadiene D033	Hexachloroethane D034	Pentachlorophenol D037	Vinyl Chloride D043	Spent Solvents F001	Spent Solvents F002	Spent Solvents F004	Spent Solvents F005	Electroplating waste F006 F007 F009
Hanford [28, 39, 40, 42]																							
PFP plutonium metal production operations and glovebox activities including maintenance, clean out, D&D and stabilization:																							
• RLMPDT.001 (MPFPD)																							
• RLMPFPCD																			•[f]	•[f]	•[f]	•[f]	
Radiochemistry Processing Laboratory operations and maintenance (RLM325D.001)																			•[f]	•[f]	•[f]	•[f]	
Metallurgy operations, cleanout, and D&D (RLM231ZD.001)																			•[f]	•[f]		•[f]	

Table 3 (continued)

Activity	Arsenic D004	Barium D005	Cadmium D006	Chromium D007	Lead D008	Mercury D009	Selenium D010	Silver D011	Chloroform D022	1,4-Dichlorobenzene D027	1, 2-Dichloroethane D028	1,1-Dichloroetthylene D029	2,4-Dinitrotoluene D030	Hexachlorobenzene D032	Hexachlorobutadiene D033	Hexachloroethane D034	Pentachlorophenol D037	Vinyl Chloride D043	Spent Solvents F001	Spent Solvents F002	Spent Solvents F004	Spent Solvents F005	Electroplating waste F006 F007 F009
Materials and Fuels Complex (AW) [58]																							
Radionuclide Processing CH-TRU Debris Waste	•	•	•	•	•	•	•	•	•										•[g]	•[g]		•[g]	
Ash Stabilization and GGE Debris Waste IDC AW-165	•	•	•	•	•	•	•	•											•[g]	•[g]		•[g]	
HRA/WCA debris IDC AW-164	•	•	•	•	•	•	•	•	•	•	•	•	•	•		•	•	•	•[g]	•[g]	•[g]	•[g]	•[g]
Subsurface Disposal Area (SD) [72]																							
Pre-1980 exhumations	•	•	•	•	•	•	•	•	•	•	•	•	•	•	•	•	•	•	•[h]	•[h]	•[h]	•[h]	•[h]
Los Alamos National Laboratory (LA) [84, 85, 87]																							
LA-007: Mixed Heterogeneous Debris from TA-55	•	•	•	•	•	•	•	•	•										•[i]	•[i]		•[i]	
LA-009: Heterogeneous Debris from the TA-21	•	•	•	•	•	•	•	•	•										•[i]	•[i]		•[i]	
LA-010: Heterogeneous Debris Waste from TA-50	•	•	•	•	•	•	•	•	•	•	•	•	•				•	•	•[i]	•[i]	•[i]	•[i]	•[i]

Table 3 (continued)

Activity	Arsenic	Barium	Cadmium	Chromium	Lead	Mercury	Selenium	Silver	Chloroform	1,4-Dichlorobenzene	1, 2-Dichloroethane	1,1-Dichloroetthylene	2,4-Dinitrotoluene	Hexachlorobenzene	Hexachlorobutadiene	Hexachloroethane	Pentachlorophenol	Vinyl Chloride	Spent Solvents	Spent Solvents	Spent Solvents	Spent Solvents	Electroplating waste
	D004	D005	D006	D007	D008	D009	D010	D011	D022	D027	D028	D029	D030	D032	D033	D034	D037	D043	F001	F002	F004	F005	F006 F007 F009
AMWTP (BN)																							
Newly generated waste from composited feedstock (i.e., supercompaction operations)	•	•	•	•	•	•	•	•	•	•	•	•	•	•	•	•	•	•	•[j]	•[j]	•[j]	•[j]	•[j]

Table 3 (continued)

NOTES:

a. RF – F001 = 1,1,1-trichloroethane, 1,1,2-trichloro-1,2,2-trifluoroethane, carbon tetrachloride, tetrachloroethylene and trichloroethylene; F002 = 1,1,1-trichloroethane, 1,1,2-trichloro-1,2,2-trifluoroethane, methylene chloride, tetrachloroethylene, and trichloroethylene; and F005 = 2-ethoxyethanol, benzene, carbon disulfide, methyl ethyl ketone, and toluene; and F006, F007, and F009 are assigned due to electroplating waste contamination.

b. Process used to recover radioisotopes (e.g., plutonium, americium, neptunium) which caused precipitation of metals as well as the radionuclides.

c. MD – F001 = 1,1,1-trichloroethane, 1,1,2-trichloro-1,2,2-trifluoroethane, carbon tetrachloride, and methylene chloride; F002 =1,1,1-trichloroethane, 1,1,2-trichloro-1,2,2-trifluoroethane, and methylene chloride; F005 = benzene, carbon disulfide, MEK, and toluene. F007 and F009 HWNs are assigned due to electroplating waste contamination.

d. BC – F001 = methylene chloride and trichloroethylene; F002 = methylene chloride and trichloroethylene; and F005 = benzene, MEK, and toluene.

e. AE – D019 carbon tetrachloride, assigned to AE waste, is covered under the F001 assigned to the BN510.1 waste stream. F002 = 1,1,1-trichloroethane, 1,1,2-trichloro-1,2,2-trifluoroethane, chlorobenzene, methylene chloride, tetrachloroethylene, and trichloroethylene; F004 = nitrobenzene; F005 = benzene, carbon disulfide, isobutanol, MEK, and toluene. Due to the commingling of AE waste and management based on content codes during the early years of shipment, the applicable AE HWNs/constituents associated with AE heterogeneous debris waste are the same for all activities.

f. RL – F001 = 1,1,1-trichloroethane, 1,1,2-trichloro-1,2,2-trifluoroethane, 1,1,2,2-tetrachloro-1,2-difluoroethane, carbon tetrachloride, methylene chloride, tetrachloroethylene, trichloroethylene, and trichlorofluoromethane; F002 = 1,1,1-trichloroethane, 1,1,2-trichloro-1,2,2-trifluoroethane, 1,2-dichlorobenzene, chlorobenzene, methylene chloride, tetrachloroethylene, trichloroethylene, and trichlorofluoromethane; F004 = cresols and nitrobenzene; and F005 = 2-nitropropane, benzene, carbon disulfide, isobutanol, MEK, pyridine and toluene. Listed HWN constituents identified in footnote [f] are the summation from referenced AK and process knowledge (PK) documents. Currently, Hanford waste is no longer feedstock to the Supercompactor and as such only the listed hazardous waste numbers are applicable.

g. MFC/AW – F001 = 1,1,1-trichloroethane, carbon tetrachloride, methylene chloride, tetrachloroethylene, and trichloroethylene; F002 = 1,2-dichlorobenzene, 1,1,1-trichloroethane, 1,1,2-trichloro-1,2,2-trifluoroethane; 1,1,2-trichloroethane, chlorobenzene, methylene chloride; tetrachloroethylene, trichloroethylene, and trichloromonofluoromethane (trichlorofluoromethane); F004 = cresols and nitrobenzene; F005 = 2-ethoxyethanol, 2-nitropropane, benzene, carbon disulfide, isobutanol, MEK, pyridine and toluene; and F006, F007, and F009 are assigned due to electroplating waste contamination.

h. SD – F001 = carbon tetrachloride, methylene chloride, tetrachloroethylene, 1,1,1-trichloroethane, trichloroethylene, trichlorofluoromethane and 1,1,2-trichloro-1,2,2-trifluorethane; F002 = methylene chloride, tetrachloroethylene, 1,1,1-trichloroethane, trichloroethylene, trichlorofluoromethane and 1,1,2-trichloro-1,2,2-trifluorethane, chlorobenzene, 1,2-dichlorobenzene, 1,1,2-trichloroethane; F004 = cresols and nitrobenzene; F005 = benzene, carbon disulfide, isobutanol, 2-ethoxyethanol, methyl ethyl ketone, 2-nitropropane, pyridine and toluene; F006, F007 and F009 are assigned due to electroplating waste contamination.

i. LA – F001= 1,1,1-trichloroethane, 1,1,2-trichloro-1,2,2-trifluoroethane, carbon tetrachloride. methylene chloride, tetrachloroethylene, trichloroethylene, and trichlorofluoromethane; F002= 1,1,1-trichloroethane, 1,1,2-trichloro-1,2,2-trifluoroethane, chlorobenzene, methylene chloride, tetrachloroethylene, trichloroethylene, 1,1,2-trichloroethane, 1,2-dichlorobenzene and trichlorofluoromethane; F004= cresols, cresylic acid, and nitrobenzene; F005= Benzene, methyl ethyl ketone (2-butanone), pyridine, toluene, 2-ethoxyethanol, 2-nitropropane, carbon disulfide and isobutanol (isobutyl alcohol); F006, F007, F009= are assigned due to electroplating waste contamination

j. BN (product drum) – F001 = 1,1,1-trichloroethane, 1,1,2-trichloro-1,2,2-trifluoroethane, 1,1,2,2-tetrachloro-1,2-difluoroethane, carbon tetrachloride, methylene chloride, tetrachloroethylene, trichloroethylene and trichlorofluoromethane; F002 =1,1,1-trichloroethane, 1,1,2-trichloro-1,2,2-trifluoroethane; 1,1,2-trichloroethane, 1,2-dichlorobenzene, chlorobenzene, methylene chloride; tetrachloroethylene, trichloroethylene, and trichlorofluoromethane; F004 = cresols, cresylic acid, and nitrobenzene; F005 = 2-ethoxyethanol, 2-nitropropane, benzene, carbon disulfide, isobutanol, MEK, pyridine and toluene; and F006, F007, and F009 are assigned due to electroplating waste contamination.

1.7.2 Hazardous Determination

1.7.2.1 Hazardous Waste Management

The BN510.3 wastes are newly generated. Hazardous waste numbers initially (or historically) assigned to the Supercompactor feedstock wastes are applicable to the BN510.3 waste stream as a result of the RCRA mixture and the derived-from rules. [1]

1.7.2.1.1 Historical Waste Management

The wastes that comprise the BN510.3 waste stream have historically been managed as mixed TRU waste at the AMWTP. [1, 5]

1.7.2.2 Ignitability

The waste materials in this BN510.3 waste stream do not meet the 40 CFR 261.21, Characteristic of Ignitability, definition of ignitability. The resulting supercompacted debris waste is not a liquid waste and is not an ignitable waste. The current State of Idaho RCRA/HWMA Permit allows the AMWTP to process within the Supercompactor aerosol cans with less than or equal to 49 mL and excess liquids that do not exceed a maximum of 5% of the overall container capacity (volume must be confirmed by RTR). [31, 43, 59, 60, 65, 71] To render the waste acceptable at WIPP, containers identified as having ignitable waste properties or containing prohibited liquids will be:

(1) Treated using Aquaset®, Aquaset II-G®, Petroset II®, Petroset IIG®, Micro-Cel® E, PIG®, SP-400®, or Hg Absorb for mercury to make the waste amenable for offsite shipment [37, 38, 47, 48, 49, 51, 64] and/or

(2) Treated by the supercompaction process to remove the excess liquids; [31, 43, 59, 60, 65] or

(3) Undergo removal of the prohibited item(s). [9, 10, 53, 54, 60, 70]

The resulting supercompacted debris waste is not an ignitable waste. The compacted debris waste is not a liquid or a compressed gas and does not contain compressed gases. The waste does not meet the U.S. Department of Transportation definition of an oxidizer as defined in 49 CFR 173, Shippers–General Requirements for Shipments and Packagings. Finally, the waste is not capable of causing fire through friction, absorption of moisture, or spontaneous chemical change. Containers with prohibited liquids will not be shipped to WIPP. [37, 38, 47, 48, 49, 51, 64] Based on the above, this waste stream does not exhibit the characteristic of ignitability (D001).

1.7.2.3 Corrosivity

The materials in this BN510.3 waste stream do not meet the 40 CFR 261.22, Characteristic of Corrosivity, definition of corrosivity. The resulting supercompacted debris waste is not a liquid waste and is not a corrosive waste. The current State of Idaho RCRA/HWMA Permit allows the AMWTP to process within the Supercompactor aerosol cans with less than or equal to 49 mL and excess liquids that do not exceed a maximum of 5% of the overall container capacity, volume confirmed by RTR. [31, 43, 59, 60, 65, 71] To render the waste acceptable at WIPP, containers identified as having corrosive waste properties or containing prohibited liquids will be:

(1) Treated using Aquaset®, Aquaset II-G®, Petroset II®, Petroset IIG®, Micro-Cel® E, PIG®, SP-400® or Hg Absorb for mercury to make the waste amenable for offsite shipment [37, 38, 47, 48, 49, 51, 64]; and/or

(2) Treated by the supercompaction process to remove the excess liquids; [31, 43, 59, 60, 65] or

(3) Undergo removal of the prohibited item(s). [9, 10, 53, 54, 60, 70]

The resulting supercompacted debris waste is not liquid waste and will not contain liquids in excess of WIPP-WAC limits. Containers with WIPP-prohibited liquids will not be shipped. [37, 38, 41 , 47, 48, 49, 51, 64] Based on the above, this waste stream does not exhibit the characteristic of corrosivity (D002).

1.7.2.4 Reactivity

The waste materials in this BN510.3 waste stream do not meet the 40 CFR 261.23, Characteristic of Reactivity, definition of reactivity. The resulting supercompacted debris waste is not a liquid waste and is not a reactive waste. The current State of Idaho RCRA/HWMA Permit allows the AMWTP to process within the Supercompactor aerosol cans with less than or equal to 49 mL and excess liquids that do not exceed a maximum of 5% of the overall container capacity, volume confirmed by RTR. [31, 43, 59, 60, 65, 71] To render the waste acceptable at WIPP, containers identified as having reactive waste properties or containing prohibited liquids will be:

(1) Treated using Aquaset®, Aquaset II-G®, Petroset II®, Petroset IIG®, Micro-Cel® E, PIG®, SP-400® or Hg Absorb for mercury to make the waste amenable for offsite shipment [37, 38, 47, 48, 49, 51, 64]; and/or

(2) Treated by the supercompaction process to remove the excess liquids; [31, 43, 60, 65] or

(3) Undergo removal of the prohibited item(s). [9, 10, 53, 54, 60, 70]

In addition, the BN510.3 waste stream is stable and will not undergo violent chemical change, react violently with water, form potentially explosive mixtures with water, or generate toxic gases, vapors, or fumes when mixed with water. The waste does not contain sulfide waste which, when exposed to a pH between 2 and 12.5, can generate toxic gases, vapors, or fumes in a quantity sufficient to present a danger to human health or the environment. The waste is not capable of detonation or explosive reaction if subjected to a strong initiating source if heated under confinement. The waste is not readily capable of detonation or explosive decomposition or reaction at standard temperature and pressure. The materials do not contain explosive material and are not forbidden explosives or Division 1.1, 1.2, or 1.3 (Class A or B) explosives as defined in 49 CFR 173. Although the waste contains wastes that are assigned F006, F007, and F009 listed HWNs that are associated with cyanide electroplating operations, the waste when exposed to a pH between 2 and 12.5 will not generate toxic gases, vapors, or fumes in a quantity sufficient to present a danger to human health or the environment. This waste stream does not exhibit the characteristic of reactivity (D003).

1.7.2.5 BN510.3 RCRA Toxicity, Listed and Toxic Substances Control Act (TSCA) Waste

1.7.2.5.1 Toxicity

The BN510.3 supercompacted debris waste stream contains RCRA toxicity constituents associated with toxicity characteristic metals and organics. [1, 5, 6, 7, 8, 28, 39, 40, 42, 52, 58, 72, 77, 82, 84, 85, 87, 90, 91] See Table 3 for process-related activities associated with the HWNs.

Table 3 identifies the HWNs and constituents associated with this waste stream, based on AK documentation. [82, 84, 85, 87, 90, 91]

The RCRA toxicity characteristic metal HWNs D004 (arsenic), D005 (barium), D006 (cadmium), D007 (chromium), D008 (lead), D009 (mercury), D010 (selenium), and D011 (silver) were associated with AE, AW, BC, BN, LA, MD, RF, and SD feedstock for the BN510.3 waste stream.[1, 5, 6, 7, 8, 30, 52, 58, 72, 77, 82, 84, 85, 87, 90, 91] The HWNs D004, D005, D006, D007, D008, D009, D010, and D011 are assigned to the BN510.3 waste stream. [1]

The HWN D018 (benzene) was associated with LA feedstock to the BN510.3 waste stream.[82] Because F-listed HWN F005 is assigned to the feedstock for this constituent, the D018 HWN is not assigned to the BN510.3 waste stream, but rather is addressed within the F-listed waste section below. [1]

The HWN D019 (carbon tetrachloride) was associated with AE, AW, and LA feedstock to the BN510.3 waste stream. [52, 58, 82, 90] Because F-listed HWN F001 is assigned to the feedstock for this constituent, the D019 HWN is not assigned to the BN510.3 waste stream, but rather is addressed within the F-listed waste section below. [1]

The HWN D021 (chlorobenzene) was associated with LA feedstock to the BN510.3 waste stream. [82] Because F-listed HWN F002 is assigned to the feedstock for this constituent, the

D021 HWN is not assigned to the BN510.3 waste stream, but rather is addressed within the F-listed waste section below. (1)

The HWN D022 (chloroform) was associated with AW, LA, MD, RF, and SD feedstock to the BN510.3 waste stream. (6, 7, 58, 72, 77, 82, 90) The HWN D022 is assigned to the waste stream. (1)

The HWN D026 (cresol) was associated with LA feedstock to the BN510.3 waste stream.(82) Because F-listed HWN F004 is assigned to the feedstock for this constituent, the D026 HWN is not assigned to the BN510.3 waste stream, but rather is addressed within the F-listed waste section below. (1)

The HWNs D027 (1,4-dichlorobenzene); D030 (2,4–dinitrotoluene); and D037 (pentachlorophenol) were associated with AE, AW, LA, and SD feedstock to the BN510.3 waste stream. (52, 58, 72, 77, 82, 90) The HWNs D027, D030, and D037 are assigned to the waste stream. (1)

The HWNs D028 (1,2-dichloroethane) and D029 (1,1-dichloroethylene) were associated with AE, AW, LA, RF, and SD feedstock to the BN510.3 waste stream. (6, 52, 58, 72, 77, 82, 90) The HWNs D028 and D029 are assigned to the waste stream. (1)

The HWNs D032 (hexachlorobenzene) and D034 (hexachloroethane) were associated with AW and SD feedstock to the BN510.3 waste stream. (58, 72, 77, 90) The HWNs D032 and D034 are assigned to the waste stream. (1)

The HWN D033 (hexachlorobutadiene) was associated with SD feedstock to the BN510.3 waste stream. (72, 77, 90) The HWN D033 is assigned to the waste stream. (1)

The HWN D035 (methyl ethyl ketone) was associated with LA feedstock to the BN510.3 waste stream.(82) Because F-listed HWN F005 is assigned to the feedstock for this constituent, the D035 HWN is not assigned to the BN510.3 waste stream, but rather is addressed within the F-listed waste section below. (1)

The HWN D038 (pyridine) was associated with LA feedstock to the BN510.3 waste stream.(82) Because F-listed HWN F005 is assigned to the feedstock for this constituent, the D038 HWN is not assigned to the BN510.3 waste stream, but rather is addressed within the F-listed waste section below. (1)

The HWN D039 (tetrachloroethylene) was associated with AW, MD, SD, and RF feedstock to the BN510.3 waste stream. (6, 7, 58, 72, 77, 90) Because F-listed HWN F001 is assigned to the feedstock for this constituent, the D039 HWN is not assigned to the BN510.3 waste stream, but rather is addressed within the F-listed waste section below. (1)

The HWN D040 (trichloroethylene) was associated with LA feedstock to the BN510.3 waste stream. (82) Because F-listed HWNs F001 and F002 are assigned to the feedstock for this constituent, the D040 HWN is not assigned to the BN510.3 waste stream, but rather is addressed within the F-listed waste section below. (1)

The HWN D043 (vinyl chloride) was associated with AW, LA, and SD feedstock to the BN510.3 waste stream. [58, 72, 77, 82, 90] The HWN D043 is assigned to the waste stream. [1]

1.7.2.5.2 Listed Waste

F-Listed HWNs. The BN510.3 supercompacted debris waste stream contains constituents associated with RCRA-listed waste HWNs. See Table 3 for process-related activities associated with the HWNs.

The BN510.3 debris waste stream is assigned the F-listed HWNs F001, F002, F004, F005, F006, F007, and F009 based on AK documentation. These F-listed HWNs were historically assigned to feedstock to the BN510.3 waste stream. [1, 5, 6, 15, 28, 30, 39, 40, 42, 52, 58, 72, 77, 80, 82]

The HWN F001 (1,1,1- trichloroethane, 1,1,2-trichloro-1,2,2-trifluoroethane, 1,1,2,2-tetrachloro-1,2-difluoroethane, carbon tetrachloride, methylene chloride, tetrachloroethylene, trichloroethylene, and trichlorofluoromethane) was associated with previous RL feedstock to the BN510.1 and AW, BC, LA, MD, SD, and RF feedstock to the BN510.3 waste stream. [5, 6, 7, 8, 28, 39, 40, 42, 58, 72, 77, 80, 82, 84, 85, 87, 90, 91] Therefore, the HWN F001 is assigned to the waste stream. [1]

The F002 hazardous waste constituents 1,1,1-trichloroethane; 1,1,2-trichloroethane; 1,1,2-trichloro-1,2,2-trifluoroethane; 1,2-dichlorobenzene; chlorobenzene; methylene chloride; tetrachloroethylene; trichloroethylene, and trichlorofluoromethane were associated with previous RL feedstock to the BN510.1, and AE, AW, BC, LA, MD, RF, and SD feedstock to the BN510.3 waste stream. [5, 6, 7, 8, 28, 39, 40, 42, 52, 58, 72, 77, 80, 82, 84, 85, 87, 90, 91] Therefore, the HWN F002 is assigned to the waste stream. [1]

Non-halogenated F003 solvent constituents (e.g., acetone, cyclohexanone, ethyl benzene, ethyl ether, methanol, methyl isobutyl ketone, n-butyl alcohol, and xylene) are associated with the Supercompactor feedstock debris waste. The BN510.3 waste stream does not exhibit the characteristic of ignitability. Therefore, the HWN F003 is not assigned to the supercompacted debris waste stream. [1]

The HWN F004 (cresols, cresylic acid, and nitrobenzene) was associated with RL feedstock to the BN510.1 waste stream and with the AE, AW, LA, and SD feedstock to the BN510.3 waste stream. [28, 39, 40, 52, 58, 72, 77, 80, 82, 90, 91] Therefore, the HWN F004 is assigned to the waste stream. [1]

The HWN F005 (2-ethoxyethanol, 2-nitropropane, benzene, carbon disulfide, isobutanol, MEK, pyridine, and toluene) was associated with AE, AW, BC, LA, MD, RF, and SD feedstock to the BN510.3 waste stream and RL feedstock to the BN510.1 waste stream. [5, 6, 7, 8, 28, 39, 40, 42, 52, 58, 72, 77, 80, 82, 90, 91] Therefore, the HWN F005 is assigned to the waste stream. [1]

The HWNs F006, F007, and F009 were associated with AW, RF, LA, and SD feedstock, and HWNs F007 and F009 were also associated with MD feedstock to the BN510.3 waste stream. [5, 6, 7, 15, 58, 72, 77, 80, 82, 90, 91] Therefore, the HWNs F006, F007, and F009 are assigned to the waste stream. [1]

P-, U-, and K-Listed HWNs. The BN510.3 supercompacted feedstock debris wastes in this waste stream are not discarded, unused, commercial chemical products, off-specification species, or manufacturing intermediates and do not contain spill residues thereof that would meet the listing of P- or U-listed hazardous waste as identified in 40 CFR 261.33, Discarded Commercial Chemical Products, off-Specification Species, Container Residues, and Spill Residues thereof. In addition, the waste materials in this waste stream were not mixed with, or derived from, the treatment, storage, or disposal of P- or U-listed waste. As a result, P- or U-listed HWNs are not assigned to this waste stream. [1, 5, 6, 7, 8, 28, 30, 39, 40, 42, 52, 58, 72, 77, 80, 82, 84, 85, 87, 90, 91]

Although hydrofluoric acid was identified as a chemical contaminant associated with the feedstock debris waste, only spent forms of hydrofluoric acid would have contaminated the feedstock debris waste. Based on this information, the U134 HWN is not assigned to this waste stream. [1, 5, 6, 7, 8, 28, 30, 39, 40, 42, 52, 58, 72, 77, 80, 82, 84, 85, 87, 90, 91]

Based on a review of AK, it was determined that the BN510.3 waste stream will contain less than one percent beryllium by weight. Beryllium is a contaminant associated with this waste. The source of the beryllium is not associated with a powdered form and is not associated with unused commercial chemical product, an off-specification species, or a container residue, and does not contain a spill residue thereof. The P015 HWN for beryllium powder is not assigned to this waste stream. [1, 5, 6, 7, 8, 28, 30, 39, 40, 42, 52, 72, 77, 80, 82, 84, 85, 87, 90, 91]

The waste materials within this waste stream are not hazardous waste from specific sources listed in 40 CFR 261.32, Hazardous Wastes from Specific Sources, (i.e., K-listed hazardous waste) and they have not been mixed with; derived from the treatment, storage, or disposal of K-listed wastes; and do not contain spill residues thereof. The waste materials in this waste stream are not assigned K-listed HWNs. [1, 5, 6, 7, 8, 28, 39, 40, 42, 52, 58, 72, 77, 80, 82, 84, 85, 87, 90, 91]

1.7.2.5.3 TSCA Waste

Polychlorinated biphenyl items with PCB concentrations equal to or exceeding 50 parts per million are not expected in the BN510.3 waste stream. Drums of PCB-contaminated Rocky Flats organic sludges are expected in the SD boxed debris waste. [6, 7, 8, 28, 30, 39, 42, 52, 72, 77, 80, 82, 84, 85, 87, 90, 91]

Drums of supercompacted feedstock debris waste identified during RTR/VE as containing PCB wastes may be placed into the box lines or may be segregated or sent to DWPG or SCW for item removal. [1, 9, 16, 29, 30, 54] PCB items and drums of PCB wastes identified in boxed debris are removed during box line operations. Potential PCB contaminated waste identified during box line repackaging is subject to AMWTP PCB cleanup requirements. [53]

PCB items removed from approved feedstock debris waste drums and boxes, drums of PCB sludges and/or soils, and potential PCB cleanup wastes are removed from the WMF-676 box lines and packaged as newly-generated waste. PCB items and sludge/soil waste are not authorized as feedstock debris waste.[77, 80, 90, 91]

Asbestos has been identified in some of the approved feedstock debris waste. Any containers identified as containing regulated types or quantities (e.g., greater than 1% of friable asbestos) will be labeled, as required, in accordance with TSCA and Occupational Safety and Health Administration regulations.

1.7.2.5.4 Other Applicable Waste Streams

The AMWTP BN510, BN510.1, and BN510.2 waste streams are pertinent to the BN510.3 waste stream. [30, 77, 80, 90, 91]

The EPA HWNs assigned to the BN510 waste stream included D004 through D011, D022, D028, D029, F001, F002, F005, F006, F007, and F009. [30]

The EPA HWNs assigned to BN510.1 include D004 through D011, D022, D027, D028, D029, D030, D034, D037, D043, F001, F002, F004, F005, F006, F007, and F009. [80, 91]

The EPA HWNs assigned to BN510.2 include D004 through D011, D022, D027, D028, D029, D030, D032, D034, D037, D043, F001, F002, F004, F005, F006, F007, and F009. [77]

The EPA HWNs assigned to BN510.3 include D004 through D011, D022, D027, D028, D029, D030, D032, D033, D034, D037, D043, F001, F002, F004, F005, F006, F007, and F009. [90]

1.8 Radionuclides

The radionuclides of concern for BN510.3 are ^{238}Pu, ^{239}Pu, ^{240}Pu, ^{242}Pu, ^{233}U, ^{234}U, ^{238}U, and ^{241}Am. The remaining WIPP-tracked radionuclides, ^{137}Cs and ^{90}Sr, are not expected to be present in measurable quantities in feedstock debris waste from RF except for IDC RF-480, due to disposal of isotopic sealed source material. Cesium-137 and computed ^{90}Sr are anticipated radionuclides for IDC RF-480 feedstock and may be detected during non-destructive assay (NDA). Cesium-137 and ^{90}Sr were identified as potentially present in AE, MD, BC, LA, SD, and AW debris waste. [6, 7, 8, 13, 50, 52, 58, 72, 82]

At a minimum, the ratios of the two most prevalent radionuclides in the isotopic mix are compared to confirm existing AK data in compliance with CH-WAC requirements. The two most prevalent radionuclides expected in the waste stream are ^{239}Pu and ^{240}Pu. This is based on a review of product drums included in the BN510.1 waste stream; however, the prevalent radioisotopes in some containers of the waste may be a combination of ^{239}Pu and a different second TRU or uranium isotope, due to commingling of wastes.

Table 4 identifies the predominant radionuclides and the principle source of those radionuclides for each of the original generators and for the BN510.3 wastes. [6, 7, 8, 13, 50, 52, 58, 72] For waste containers that have multiple generators and therefore a mixture of weapons grade plutonium (WG Pu), enriched uranium (EU), depleted uranium (DU), heat source isotopes, and fuel grade plutonium, a combination of any two of the common isotopes identified may be detected as the most prevalent. Although the waste stream contains depleted uranium in the feedstock material, the weight of uranium within the overall feedstock material will be less than 1% by weight. Radioassay data are reviewed and assessed by AMWTP NDA personnel as described in the RPT-TRUW-03, Drum Assay Technical Review Report. [14]

The radioisotopic content for each AMWTP supercompacted debris waste 100-gallon product drum will be calculated based on the aggregate of the NDA results for each of the compacted feedstock debris waste drums contained therein. The POS is used to ensure that each payload container does not exceed WAC weight or dose limits and complies with the required TRU activity (greater than 100 nCi/g). The direct feed 55-gallon drums will contain at least one TRU radionuclide greater than the lower limit of detection (LLD). The 100-gallon product drums that contain puck(s) with TRU radionuclides at less than LLD from the box line feed, as determined by 55-gallon drum assay, are assayed using the Super HENC (high energy neutron counter) for final TRU determination.

Table 4. Predominant radionuclides expected in debris wastes by generator site. [6, 7, 8, 13, 50, 52, 58, 72, 82]

Generator Site	Principal Plutonium Source	Predominant Radionuclides by Activity
RF	WG	^{239}Pu, ^{240}Pu
RF	WG, DU, EU	^{239}Pu (^{235}U or ^{238}U)
MD	WG	^{239}Pu, ^{240}Pu
MD	Heat source	^{238}Pu, ^{239}Pu
BC	WG	^{239}Pu, ^{240}Pu
AE	Combination WG Pu, fuels-grade Pu	^{241}Pu, ^{239}Pu
AW	Combination WG Pu, fuels-grade Pu	^{241}Am, ^{241}Pu
SD	Combination WG Pu, heat source Pu, uranium, thorium, fuels-grade Pu, DU, EU	^{241}Am, ^{241}Pu
LA	Combination WG Pu, heat source Pu, fuels-grade Pu, reactor-grade Pu, enriched ^{242}Pu	^{241}Pu, ^{238}Pu
BN	WG (RF waste)	^{239}Pu, ^{240}Pu
BN	Combination WG Pu, heat source Pu	^{238}Pu, ^{239}Pu
BN	Combination WG Pu, heat source Pu, uranium, thorium, fuels-grade Pu	^{239}Pu (^{240} Pu, ^{241}Pu, ^{238}Pu, ^{241}Am, ^{235}U or ^{238}U)

2.0 SHIPPING CONSIDERATIONS

2.1 Waste Packaging

2.1.1 Direct-Load of 100-gallon Supercompacted Debris Waste Containers Into TRUPACTs

The BN510.3 waste stream consists of supercompacted drums of debris waste (pucks) placed directly into 100-gallon product drums. There are no inner packagings or layers of confinement associated with the 100-gallon product drums. There is a filtered lid on the 100-gallon drums. If 100-gallon drums become damaged, they are packaged into SWBs for shipment to WIPP. [9, 17, 70]

2.2 Flammability Consideration

The payload containers in the BN510.3 waste stream must comply with the Contact-Handled Transuranic Waste Authorized Methods for Payload Control (CH-TRAMPAC) requirements. As specified in the CH-TRAMPAC, a determination of compliance with the flammable gas limits will be performed for volatile organic compounds (VOCs), hydrogen, and methane. Headspace gas (HSG) sampling and analysis is performed when required by the WIPP-Waste Acceptance Plan and/or CH-TRAMPAC. At a minimum, the HSG analytical results are evaluated to determine the total concentration of flammable VOCs present in the waste. Payload containers, including those with HSG results exceeding 500 parts per million flammable VOCs, are evaluated for compliance with applicable CH-TRAMPAC requirements prior to shipment. Payloads containing flammable VOCs are managed in accordance with CCP-PO-003, CCP Transuranic Authorized Methods for Payload Control (CCP CH-TRAMPAC). [25]

3.0 REFERENCES

NOTE: *Advanced Mixed Waste Treatment Project documents such as procedures, AK reports, and operating instructions, are cited without revision numbers or dates. The most recent revisions of these documents are available through the AMWTP Electronic Document Management System (EDMS). Previous revisions are available on EDMS.*

1. RPT-TRUW-12, AMWTP Waste Stream Designations, current revision

2. DOE/WIPP 01-3194, CH-TRU Waste Content Codes (CH-TRUCON)

3. DOE/LLW-217, DOE Waste Treatability Group Guidance, 1995 [P670A]

4. MP-TRUW-8.1, Certification Plan for INL Transuranic Waste, current revision

5. RPT-TRUW-06, Acceptable Knowledge Document for AMWTP Waste, current revision

6. RPT-TRUW-56, Acceptable Knowledge Document for INL Stored Transuranic Waste – Rocky Flats Plant, current revision

7. RPT-TRUW-13, Acceptable Knowledge Document for INL Stored Transuranic Waste – Mound Plant Waste, current revision

8. RPT-TRUW-04, Acceptable Knowledge Document for the Battelle Columbus Laboratories Building JN-4 Plutonium Laboratory, current revision

9. INST-FOI-20, Supercompactor and Post-Compaction Operations, current revision

10. INST-FOI-17, Facility Visual Examination Operations, current revision

11. DOE/WIPP-02-3122, Transuranic Waste Acceptance Criteria for the Waste Isolation Pilot Plant [P2003A]

12. MP-TRUW-8.13, Collection, Review, and Management of Acceptable Knowledge Documentation, current revision

13. RPT-TRUW-07, Determination of Radioisotopic Content in TRU Waste Based on Acceptable Knowledge, current revision

14. RPT-TRUW-03, Drum Assay Technical Review Report, current revision

15. Rocky Flats Environmental Technology Site Backlog Waste Reassessment Baseline Book, May 5, 1994-March 5 2001 [P052A]

16. Summary of PCB AK Sources, Wastren, Inc., September 5, 2001. [C207A]

17. INST-OI-24, Packaging Radioactive Waste, current revision

18. Correspondence from DOE Carlsbad Area Office to J.M. Roberson, RFFO, and J.M. Wilcynski, INEEL, Identification of Defense Waste Streams Generated at Rocky Flats Environmental Technology Site (RFETS), May 20, 1997 [C191A]

19. Operable Unit 9 Site Scoping Report: Volume 7 – Waste Management, February 1993 [P380A]

20. Interview of J.B. Williamson, BCL, regarding Historical Operations Conducted in JN-4, September 2000 [C258A]

21. Interview of David Freas, BCL, regarding Historical Operations in Building JN-4, September 2000 [C259A]

22. Interview of William Pardue, BCL, regarding Historical Operations in Building JN-4, October 2000 [C260A]

23. DOE, Interim Guidance on Ensuring that Waste Qualifies for Disposal at the Waste Isolation Pilot Plant, 1997 [P203A]

24. Correspondence from Frank Marcinowski to EM-13 (Stan Wolf, 301-903-7962), Process for TRU Waste Defense Determination, February 2005 [C329A]

25. CCP-PO-003, CCP Transuranic Authorized Methods for Payload Control (CCP CH-TRAMPAC), Central Characterization Project [P672A]

26. MP-TRUW-8.2, Quality Assurance Project Plan, current revision

27. DOE/TRU-13-3425, Annual Transuranic Waste Inventory Report - 2013 [P2023A]

28. RPT-TRUW-82, Acceptable Knowledge Document for Hanford Debris Waste Shipped to AMWTP

29. INST-FOI-23, Special Case Waste Operations, current revision

30. RPT-TRUW-30, Acceptable Knowledge Summary for Supercompacted Debris Waste (BN510) [P439A]

31. INST-OI-12, Real-Time Radiography Examinations (Certification Scans), current revision

32. INST-OI-34, Non-Facility Visual Examination Operations, current revision

33. INST-FOI-01, In-Plant Drum Assay Operations, current revision

34. INST-OI-14, Drum Assay Operations, current revision

35. RPT-TRUW-05, Waste Matrix Code Reference Manual, current revision

36. Correspondence from the EPA to Donald C. Cadbury, National TRU Program CBFO, June 10, 2010 [C869S]

37. Material Safety Data Sheet, Micro-Cel®E, Celite Corporation, January 17, 2007 [P808S]

38. Material Safety Data Sheets, Aquaset® (sodium montmorillonite) and Aquaset II-G® (sepiolite), Fluid Tech, January 1, 2005, and November 11, 2008 [P881S]

39. CCP-PK-RL-101, Central Characterization Project Process Knowledge Summary Report for Hanford Plutonium Finishing Plant Contact-Handled Transuranic Debris Waste, 85-Gallon Overpacked Drums, Waste Stream MPFPDD, Rev. 2, June 4, 2010 [P853A]

40. CCP-PK-RL-102, Central Characterization Project Process Knowledge Summary Report For The Hanford 325 Building Radiochemical Processing Laboratory Contact-Handled Transuranic Debris Waste, 85-Gallon Overpacked Drums, Waste Stream RLM325D.001, Rev. 2, June 4, 2010 [P854A]

41. DOE M 435.1, DOE Radioactive Waste Management Manual [P1183A]

42. CCP-PK-RL-103, Central Characterization Project Process Knowledge Summary Report For Hanford 231-Z building Contact Handled Transuranic Debris Waste, 85-Gallon Overpacked Drums, Waste Stream RLM231ZD.001, Rev. 2, June 4, 2010 [P855A]

43. ID489008952, AMWTP HWMA/RCRA Permit and interim status documents

44. Resource Conservation and Recovery Act, 40 CFR Parts 260 through 280

45. TV-009-13, Memorandum to File, Updated Waste Material Parameter Weight per Unit of Waste Calculations for the BN510.3 Supercompacted Debris Waste Stream, September 30, 2013. [C1325A]

46. Nuclear Waste Policy Act of 1982, 1982 [P757A]

47. Material Safety Data Sheets for Universal PIG® Absorbents (MSD-014) New Pig Corp., October 10, 2011 [P1376S]

48. Material Safety Data Sheets for Oil-Only PIG® Absorbents (MSD-016) New Pig Corp., August 3, 2011 [P1377S]

49. Material Safety Data Sheets for BLUE PIG® Sock Absorbents (MSD-029) New Pig Corp., February 9, 2011 [P1378S]

50. Box 10130773 and NCR# 72914, AMWTP, October 3, 2012 [C1066S]

51. Material Safety Data Sheets for Water Works SP-400 Absorbent (MSDS-1252), Water Works America Inc., August 23, 2012 [P1432S]

52. RPT-TRUW-89, Acceptable Knowledge Document for Argonne National Laboratory-East Waste, current revision

53. RPT-ESH-079, Advanced Mixed Waste Treatment Facility Box Line PCB Management Plan, current revision [P1827A]

54. INST-FOI-28, Cleaning and Packaging of Dust/Debris/Material from 1st Floor Cells in WMF-676, current revision

55. INST-FOI-37, Box Line Quarterly Cleanout, current revision

56. INST-OI-09, Retrieval Inspection Station Operations, current revision

57. MP-TRUW-8.45, Virtual Overpack Process and Planning, current revision

58. RPT-TRUW-79, Acceptable Knowledge Document for Materials and Fuels Complex Waste, current revision

59. EDF-0783, Deflagration Analysis of Aerosol Can Propellant in the Supercompactor Glovebox. [P1829A]

60. INST-TRUW-8.13.1, TRU Programs Site Project Office Process, current revision

61. Advanced Mixed Waste Treatment Project Defense Determination Evaluation for Argonne National Laboratory-East Debris Wastes Proposed for Inclusion into the Supercompactor Feedstock (i.e., BN-508) – TV-003-13 [C1277A]

62. Revised Advanced Mixed Waste Treatment Project Defense Determination Evaluation for Materials and Fuels Complex Debris Wastes Proposed for Inclusion into the Supercompactor Feedstock (i.e., BN-508) – TV-002-13 [C1276A]

63. Public Law 102-579, WIPP Land Withdrawal Act, U.S. Congress, October 1992 [P1674A]

64. Material Safety Data Sheet for Hg Absorb® (MSDS-560) Lab Safety Supply, Inc., May 19, 2001 [P1398S]

65. RPT-82, Supercompactor Liquid Treatment Capabilities, Evaluation and Conclusion [P859S]

66. EPA Docket No. A-98-49: II-A4-169, Waste Characterization Tier 1 Change Report, Addition of Contact-Handled Transuranic Waste to The Advanced Mixed Waste Treatment Project Approved Program: S3000 and S5000 Waste From Argonne National Laboratory-East and S5000 Waste from Idaho National Laboratory Materials And Fuels Complex, U.S. EPA, January 20, 2013 [C1284A]

67. INST-OI-15, Box Assay Operations, current revision [P1857S]

68. INST FOI 32, Size Reduction of Large Items, current revision

69. INST-OI-65, Standard Waste Box Direct Loading, current revision [P1850S]

70. INST-FOI-16, Box line Operations, current revision

71. LST-EC&P-11, AMWTP HWMA/RCRA Permit WMF-676 Waste Management Criteria, current revision

72. RPT-TRUW-91, Acceptable Knowledge Document for Pre-1980 INL-Exhumed SDA Waste, current revision

73. EPA Docket No. A-98-49; II-A4-174, Waste characterization Tier 1 Change Report: Addition Of Contact-Handled Transuranic Waste To The Advanced Mixed Waste Treatment Project Approved Program: Pre-1980 INL-Exhumed Subsurface Disposal Area Summary Category Group S3000 And S5000 Waste, United States Environmental Protection Agency, May 01, 2013. [C1306A]

74. EPA Tier approval letter for RPT-TRUW-91 SDA, United States Environmental Protection Agency, July 9, 2013 [C1307A]

75. INST-FOI-21, Drummed Waste Handling Operations, current revision

76. Defense/Non-Defense and Waste Isolation Pilot Plant Land Withdrawal Act Evaluation for Pre-1980 Idaho National Land Exhumed Subsurface Disposal Area Wastes, AMWTP, July 13, 2013 [C1310A]

77. RPT-TRUW-83, Acceptable Knowledge Summary for Supercompacted Debris Waste, Rev. 6, September 9, 2013 [P1996A]

78. TV-008-13, Memorandum to File, Waste Volume Estimates BN510.3 Supercompacted Debris Waste Stream, September 30, 2013 [C1329S]

79. E-mail correspondence from AMWTP Production Planning (available in EDMS), September 19, 2013 [C1328S]

80. RPT-TRUW-83, Acceptable Knowledge Summary for Supercompacted Debris Waste (BN510.1), Rev. 0, September 10, 2010 [P2010A]

81. CCP-AK-INL-001, Central Characterization Program, Acceptable Knowledge Summary Report for Waste Retrieved from Designated Areas Within the Subsurface Disposal Area at the Idaho National Laboratory

82. RPT-TRUW-93, Acceptable Knowledge Documents for Los Alamos National Laboratory Debris, current revision.

83. TV-010-13, Memo to file, Defense/non-defense and WIPP Land Withdrawal Act Evaluation for Los Alamos National Laboratory (LANL) debris wastes, AMWTP, October 16, 2013.[C1313A]

84. Form-1900, AMWTP Offsite Waste Stream Profile Form for LANL LA-MHD04.001, AMWTP, September 12, 2013. [P1999A]

85. Form-1900, AMWTP Offsite Waste Stream Profile Form for LANL LA-MHD09.001, September 12, 2013. [P2001A]

86. Discrepancy resolution for EDF-0783 and EDF-0768, AMWTP, February 28, 2013. [D109A]

87. Form-1900, AMWTP Offsite Waste Stream Profile Form for LANL LA-MHD01.001, AMWTP, September 12, 2013. [P1998A]

88. JAV-001-13, BN510.3 waste volume estimates for LANL inclusion into the Supercompacted Debris Waste Stream, AMWTP, December 2, 2013.[C1323A]

89. EPA Tier 1 approval letter for LANL debris waste as supercompactor feedstock, EPA, September 16, 2013. [C1327A]

90. RPT-TRUW-83, Acceptable Knowledge Summary for Supercompacted Debris Waste, Rev. 7, December 3, 2013 [P2008A]

91. RPT-TRUW-83, Acceptable Knowledge Summary for Supercompacted Debris Waste (BN510.1), Rev. 0, September 10, 2010, and Rev. 3, February 7, 2013.[P2010A]

92. TV-012-13, Waste material parameter evaluation for inclusion of LANL debris into the BN510.3 Supercompacted Debris Waste Stream, AMWTP, December 2, 2013. [C1334A]

Appendix A – Approved Feedstock Debris Waste by Original Generator and IDC

The following table lists the approved feedstock debris waste by original generator and IDC. (30, 77, 80, 90, 91)

Waste Type	Site	IDC	Description
COMBUSTIBLES	RF	010	Paper and Rags
	RF	020	Wood and Benelex
	RF	030	Plastic
	RF	040	Rubber
	RF	33A	WIPP Experimental Test Program (WETP) Bin Program-Combustibles A (IDCs 335, 336, 337, and 339)
	RF	33B	WETP Bin Program – Combustibles B (IDCs 330, 337, and 339)
	RF	302	Benelex® and Plexiglas®
	RF	330	Paper and Rags-Dry
	RF	336	Paper and Rags-Moist
	RF	337	Plastic, Teflon®, Washables, PVC
	RF	339	Leaded Rubber Gloves and Aprons
	RF	430	Unleached Ion Column Resin
	RF	431	Leached Resin
	RF	460	Washables, Rubber, Plastic
	RF	463	Leaded Rubber Gloves and Aprons
	RF	464	Benelex® and Plexiglas®
	RF	833	Plastics, TRU Mixed
	RF	831	Dry Combustibles
	RF	832	Wet Combustibles
	RF	900	Low Specific Activity (LSA) Paper, Plastics, etc.
	RF	970	Wood

Waste Type	Site	IDC	Description
FILTERS	RF	328	Ful-Flo® Incinerator Filters
	RF	335	Absolute 8 × 8 Filters
	RF	338	Insulation and Chemical Warfare Service (CWS) Filter Media
	RF	360	Insulation
	RF	376	Cemented Insulation and Filter Media
	RF	490	High-Efficiency Particulate Air Filters and CWS Filters
	RF	491	Plenum Prefilters
GRAPHITE	RF	070	Graphite
	RF	300	Graphite Molds
	RF	301	Graphite Cores
	RF	303	Scarfed Graphite Chunks
	RF	310	Graphite Scarfings
	RF	312	Coarse Graphite

Waste Type	Site	IDC	Description
HETEROGENEOUS	AE	100	General Plant Waste
	AE	101	Cut up Gloveboxes
	AE	104	Alpha Hot Cell Waste
	AE	106	Special Source Material
	AE	110	Research Generated Waste
	AE	120	D and D Waste Compactable and Combustible Solids
	AW	150	Laboratory Waste
	AW	160	AL/CL Debris Waste
	AW	161	ACL Glassware, Paper, Poly, and Misc.
	AW	162	ANL-W FMF EFL Zr-U-Pu Fuel Cast
	AW	163	ANL-W ACL Cold-Line Ab. Liq. and Debris
	AW	164	ANL-W HRA/WCA Debris
	AW	165	Ash Stabilization and GGE Debris
	AW	167	MFC CH-TRU Heterogeneous Debris
	BC	201	Noncombustible Solids
	BC	202	Combustible Solids-Paper/Cloth
	BN	508	AMWTP Newly Generated Debris
	BN	510	Supercompacted Debris
	BN	550	Supercompacted Debris (BN510.1)
	LA	007	Mixed Heterogeneous Debris from TA-55
	LA	009	Heterogeneous Debris from the TA-21 DP West Facility
	LA	010	Heterogeneous Debris Waste from TA-50
	MD	801	Rags, Paper, Wood, etc.
	MD	802	Dry Box Gloves and O-Rings
	MD	803	Metal, Equipment, Pipe, Valves, etc.
	MD	804	Plastic, Tygon®, Mani-Boots, etc.
	MD	805	Asbestos Filters
	MD	810	Glass, Flasks, Sample Vials, etc.
	MD	813	Glass Filters and Fiberglass
	MD	814	Graphite Waste
	MD	824	Equipment Boxes, Noncombustible
	MD	825	Equipment Drums, Noncombustible

Waste Type	Site	IDC	Description
	MD	826	Equipment Boxes, Combustible
	MD	827	Equipment Drums, Combustible
	MD	838	<10 nCi/g Non-combustible
	MD	847	LSA <100 nCi/g Combustible
	MD	848	LSA <100 nCi/g Noncombustible
	RF	241	Americium Process Residue
	RF	372	Grit
	RF	374	Blacktop, Concrete, Dirt, and Sand
	RF	750	Pits 11 and 12 Debris
	RF	760	Pad 1 Cells 1 and 2 RF Debris
	RF	950	LSA Metal, Glass, etc.
	RF	960	Concrete, Asphalt, etc.
	SD	177	Pre-1980 INL-Exhumed SDA Heterogeneous Debris

Waste Type	Site	IDC	Description
INORGANIC NON-METAL	RF	060	Glass
	RF	440	Glass
	RF	441	Raschig Rings, Unleached
	RF	442	Raschig Rings, Leached
	RF	44A	WETP Bin Program – Glass (IDCs 440 and 442)
	RF	368	Magnesium Oxide Crucibles
	RF	370	LECO Crucibles
	RF	371	Fire Brick
	RF	377	Coarse Fire Brick
	RF	391	Crucibles and Sand
	RF	392	Sand, Slag, and Crucible
LEAD/CADMIUM METAL	RF	488	Glovebox Parts w/Lead
UNCATEGORIZED METAL	RF	050	Metal Scrap
	RF	48A	WETP Bin Program – Metals (IDCs 480 and 481)
	RF	320	Heavy Non-special Source Metal
	RF	321	Lead
	RF	416	Zinc Magnesium Alloy Metals
	RF	480	Scrap Metal (Non SS)
	RF	481	Leached Metals (Non SS)

Waste Stream or Waste Type Description: Supercompacted Debris

Waste Stream or IDC Number: BN510.3

AK Information	AK#<1>	Source Document Reference Number
Generator site TRU waste stream (WS) - specific information		
Information identifying the building(s) and/or area (s) from which TRU waste was or is generated.	WS1	C018A, C047A, C048A, C053A, C067A, C072A, C074A, C082A, C087A, C1015A, C1025A, C1029A, C102A, C1035A, C1036A, C1041A, C1042A, C1051A, C1052A, C1054S, C1055S, C1073A, C1076A, C1080A, C1081S, C1082A, C1085A, C1087S, C1089A, C1091S, C1093A, C1116S, C1118S, C1120S, C1121S, C1122A, C1125S, C1126S, C1127S, C1128S, C1129S, C1138S, C115A, C1169S, C1215S, C1216S, C1217S, C1218S, C1219S, C1221S, C1235S, C1237S, C1239S, C1240S, C1242S, C1243S, C1265S, C1266S, C1267S, C1268S, C1271S, C1280A, C1281A, C1284A, C1309A, C1317S, C1325A, C1326A, C1347A, C1348S, C1349A, C1361S, C155A, C162A, C170A, C171A, C182A, C184A, C185A, C254A, C289A, C295A, C296A, C299A, C320A, C322A, C344A, C351A, C358A, C375A, C378A, C381A, C385A, C386A, C387A, C388A, C389A, C390A, C391A, C393A, C394A, C395A, C396A, C397A, C398A, C399A, C400A, C401A, C402A, C403A, C405A, C406A, C408A, C409A, C410A, C412A, C413A, C414A, C417A, C418A, C419A, C420A, C421A, C422A, C423A, C424A, C425A, C429A, C430A, C431A, C433A, C434A, C435A, C436A, C437A, C438A, C439A, C443A, C444A, C445A, C446A, C447A, C448A, C449A, C450A, C458A, C461A, C462A, C463A, C464A, C465A, C466A, C467A, C468A, C470A, C472A, C473A, C478A, C486A, C488A, C490A, C491A, C522A, C533A, C557A, C574S, C576S, C579A, C580A, C603A, C618A, C789S, C822S, C842S, C852A, C865A, C869S, D007A, D023A, D029A, D030A, D061A, D094A, D096A, D099S, D100A, D107A, D108S, D109A, P001A, P006A, P012A, P014A, P016A, P024A, P035A, P037A, P038A, P049A, P052A, P058A, P060A, P061A, P062A, P067A, P076A, P079A, P082A, P083A, P090A, P097A, P098A, P1030A, P1031A, P104A, P109A, P113A, P117A, P127A, P1319A, P1320A, P1322A, P1353A, P1365A, P1366A, P1379A, P1380A, P1381A, P1382A, P1384S, P1385S, P1387S, P1388A, P1389A, P1391A, P1392A, P1393A, P1396S, P1403S, P1405A, P1417A, P1418A, P1419A, P1466S, P1472S, P1473A, P1483A, P1489S, P1496S, P1498S, P1501S,

Information identifying the building(s) and/or area (s) from which TRU waste was or is generated.	WS1	P1502S, P1514S, P1537A, P153A, P1540S, P1541S, P1547S, P1548A, P1549A, P1554S, P1557S, P1558S, P1560S, P1561S, P1563S, P1565S, P1570S, P1588S, P1591S, P1635S, P164A, P1655S, P1658S, P1672S, P167A, P1685S, P1704S, P1723S, P1724S, P1725S, P1726S, P1727S, P1742S, P1770A, P1771S, P1775S, P1776S, P1779S, P1781S, P1783S, P1795S, P1797S, P1799S, P1801S, P1802S, P1803S, P1804S, P1806S, P1810S, P1811S, P1812S, P1813S, P1814S, P1815S, P1823A, P1825A, P1826A, P1827A, P1829A, P1830A, P1839A, P1840A, P1841A, P1842A, P1843A, P1847S, P1850S, P1851A, P1852A, P1853A, P1854A, P1855A, P1864A, P1871S, P1984S, P1985S, P1987A, P1988A, P198A, P1996A, P1998A, P1999A, P2001A, P2002A, P2008A, P2010A, P2025A, P2043S, P2044S, P2054S, P2064S, P221A, P222A, P223A, P224A, P225A, P312A, P319A, P328A, P333A, P335A, P336A, P345A, P347A, P350A, P351A, P352A, P357A, P368A, P369A, P370A, P380A, P381A, P385A, P400A, P405A, P414A, P417A, P418A, P423A, P435S, P439A, P442A, P443A, P444A, P448A, P449A, P450A, P451A, P452A, P453A, P454A, P455A, P456A, P460A, P461A, P462A, P463A, P469A, P475A, P477A, P478A, P479A, P480A, P481A, P482A, P484A, P485A, P486A, P487A, P489A, P490A, P491A, P492A, P493A, P498A, P499A, P501A, P503A, P504A, P505A, P506A, P507A, P509A, P510A, P511A, P512A, P516A, P517A, P518A, P519A, P520A, P522A, P523A, P524A, P525A, P526A, P527A, P540A, P544A, P545A, P546A, P550A, P551A, P593A, P594A, P599A, P604A, P610A, P621A, P632A, P633A, P635A, P636A, P637A, P638A, P649A, P658A, P659A, P662A, P667A, P671S, P673A, P679A, P680A, P683S, P689A, P699A, P700S, P703A, P708A, P709A, P710A, P711A, P712A, P715A, P717A, P723S, P728A, P733S, P736A, P741A, P744A, P746A, P751A, P755A, P759S, P816A, P834A, P840A, P842A, P850A, P861A, P888A, P890A, P953A, U013A, U032A, U043A, U047A, U052A, U056A, U059A, U069A, U077A, U126A, U139A, U141A, U145A, U146A, U148A, U151A, U153A, U154A, U155A, U156A, U157A, U158A, U159A, U160A, U161A, U162A, U168A, U169A, U173A, U187A, U190A, U195A, U198A, U202A, U203A, U204A, U207A, U215A, U223A, U224A, U225A, U237S, U313S, U314S, U330S, U333A, U340A, U343S, U346S, U351S, U352S, U353S, U361S, U378S, U381S, U385S, U386S, U391S, U393S, U394S, U416S, U418S, U419S, U420S, U421S, U442A

Waste stream volume and time period of generation.	WS2	C048A, C072A, C1015A, C1023A, C1045A, C1051A, C1054S, C1069A, C1071S, C1081S, C1089A, C1090S, C1118S, C1130A, C1146S, C1161S, C118A, C1196S, C1202S, C1223S, C1225S, C1226S, C1231S, C1235S, C1239S, C1242S, C1243S, C1265S, C1266S, C1267S, C1282S, C1309A, C1323A, C1328S, C1329S, C1330A, C1347A, C1352S, C1354S, C254A, C267A, C289A, C292A, C294A, C295A, C296A, C322A, C348A, C359A, C372A, C375A, C379A, C424A, C461A, C463A, C465A, C467A, C472A, C485A, C499A, C507A, C522A, C526A, C534A, C535A, C543S, C557A, C574S, C576S, C579A, C580A, C603A, C620A, C842S, C850A, C851A, C855A, C856A, C861A, C864S, C865A, C869S, C875S, C946S, D029A, D030A, D040A, D061A, D099S, D107A, P024A, P052A, P061A, P090A, P1030A, P1031A, P1101A, P1109A, P113A, P127A, P1351A, P1365A, P1366A, P1374A, P1379A, P1380A, P1381A, P1382A, P1403S, P1417A, P1473A, P1483A, P1517S, P153A, P1563S, P1565S, P1621S, P164A, P1655S, P1675S, P1677S, P1678S, P1683S, P1686S, P1687S, P1725S, P1726S, P1727S, P1741S, P1742S, P1743S, P1793S, P1797S, P1804S, P1806S, P1819A, P1823A, P1825A, P1826A, P1839A, P1840A, P1841A, P1842A, P1843A, P1847S, P1851A, P1852A, P1853A, P1854A, P1855A, P1864A, P1987A, P1988A, P1996A, P1998A, P1999A, P2000A, P2001A, P2002A, P2008A, P2010A, P2023A, P2025A, P205A, P221A, P222A, P223A, P224A, P225A, P237A, P246A, P318A, P319A, P328A, P333A, P354A, P357A, P364A, P365A, P368A, P380A, P395A, P400A, P417A, P418A, P439A, P442A, P443A, P461A, P462A, P469A, P482A, P486A, P487A, P498A, P499A, P501A, P505A, P506A, P507A, P509A, P511A, P517A, P519A, P522A, P523A, P524A, P567A, P593A, P604A, P610A, P621A, P632A, P633A, P635A, P636A, P637A, P638A, P649A, P656A, P658A, P659A, P662A, P671S, P673A, P680A, P708A, P709A, P710A, P711A, P712A, P715A, P717A, P728A, P743A, P744A, P746A, P751A, P754A, P755A, P758A, P759S, P826A, P838A, P840A, P842A, P850A, P861A, P888A, P890A, U022A, U059A, U069A, U122A, U126A, U127A, U139A, U141A, U142A, U146A, U148A, U154A, U159A, U166A, U187A, U197A, U198A, U202A, U207A, U215A, U218A, U223A, U224A, U225A, U227S, U228S, U229S, U235S, U236S, U237S, U306S, U325S, U330S, U333A, U339S, U343S, U344S, U345S, U351S, U353S, U370S, U374S, U375S, U385S, U386S, U391S, U416S

Waste generating process description for each building, including processes with U134 waste generation, if applicable and process flow diagrams. See instructions if process flow diagrams are not available.	WS3	C005A, C008A, C014A, C018A, C047A, C050A, C053A, C061A, C082A, C087A, C100A, C1029A, C1035A, C1040S, C1041A, C1042A, C1051A, C1080A, C1082A, C1086S, C1087S, C1091S, C1093A, C1118S, C1120S, C1121S, C1122A, C1133S, C1144S, C1147S, C115A, C1160S, C1161S, C1164S, C1165S, C1168S, C1170S, C1180S, C1196S, C1197S, C1202S, C1208S, C1213S, C1217S, C1219S, C1221S, C1230S, C1239S, C1240S, C1244S, C1260S, C1265S, C1266S, C1267S, C1268S, C1269S, C1270S, C1271S, C1280A, C1281A, C1347A, C1348S, C171A, C175A, C180A, C181A, C184A, C185A, C254A, C257A, C258A, C260A, C444A, C458A, C466A, C473A, C481A, C574S, C587A, C852A, D037A, D087S, D096A, D099S, D107A, D109A, P001A, P012A, P014A, P015A, P016A, P024A, P035A, P037A, P038A, P039A, P049A, P052A, P053A, P055A, P056A, P058A, P059A, P060A, P061A, P062A, P067A, P070A, P076A, P078A, P079A, P081A, P082A, P083A, P092A, P096A, P097A, P098A, P1030A, P103A, P104A, P106A, P109A, P110A, P114A, P117A, P124A, P1319A, P1320A, P1322A, P1325A, P1345A, P1346A, P1347A, P1348A, P1349A, P1350A, P1352A, P1365A, P1366A, P1379A, P1380A, P1381A, P1382A, P1388A, P1392A, P1393A, P1396S, P1403S, P1417A, P1418A, P1419A, P1466S, P1472S, P1483A, P1488S, P1489S, P1491S, P1493S, P1494S, P1495S, P1496S, P1500S, P1501S, P1502S, P1505S, P1507S, P1518A, P1528S, P1529S, P1530S, P1532S, P1533S, P1534S, P1535S, P1537A, P1540S, P1541S, P1542S, P1544S, P1547S, P1553S, P1554S, P1555S, P1556S, P1557S, P1559S, P1560S, P1561S, P1563S, P1566S, P1568S, P1581S, P1582S, P1584S, P1586S, P1587S, P1588S, P1590S, P1591S, P1632S, P1634S, P1638S, P1639S, P163A, P1640S, P1641S, P1642S, P1644S, P1647S, P164A, P1656S, P1657S, P1658S, P1671S, P1672S, P1675S, P1677S, P1678S, P1679S, P167A, P1680S, P1682S, P1683S, P1684S, P1686S, P1687S, P1688S, P1689S, P1692S, P1693S, P1694S, P1699S, P1701S, P1704S, P1705S, P1708S, P1710S, P1711S, P1712S, P1715S, P1716S, P1717S, P1723S, P1724S, P1725S, P1726S, P1727S, P1730S, P1735S, P1741S, P1742S, P1743S, P1745S, P1748S, P1751S, P1754S, P1755S, P1756S, P175A, P1762S, P1763S, P1765S, P1766S, P1767S, P1770A, P1772S, P1775S, P1778S, P1780S, P1787S, P1790S, P1792S, P1793S, P1794A, P1796S, P1797S, P1798S, P1799S, P1801S, P1802S, P1804S, P1805S, P1806S, P1811S, P1812S, P1813S, P1814S,

Waste generating process description for each building, including processes with U134 waste generation, if applicable and process flow diagrams. See instructions if process flow diagrams are not available.	WS3	P1815S, P1823A, P1825A, P1826A, P1829A, P1830A, P1839A, P1840A, P1841A, P1842A, P1843A, P1847S, P1849S, P1851A, P1852A, P1853A, P1854A, P1855A, P1864A, P1985S, P1987A, P1988A, P1996A, P1998A, P1999A, P2001A, P2002A, P2008A, P2010A, P2025A, P2043S, P2044S, P205A, P221A, P222A, P223A, P224A, P225A, P282A, P312A, P319A, P335A, P341A, P345A, P347A, P352A, P357A, P368A, P369A, P380A, P400A, P404A, P405A, P414A, P417A, P418A, P423A, P435S, P439A, P442A, P443A, P444A, P448A, P449A, P450A, P451A, P452A, P453A, P454A, P455A, P456A, P460A, P461A, P462A, P463A, P469A, P482A, P483A, P485A, P486A, P487A, P489A, P490A, P491A, P492A, P493A, P504A, P505A, P507A, P511A, P516A, P517A, P518A, P519A, P520A, P522A, P523A, P524A, P526A, P527A, P546A, P558A, P594A, P599A, P604A, P610A, P621A, P632A, P633A, P635A, P636A, P637A, P638A, P649A, P658A, P659A, P662A, P667A, P671S, P673A, P680A, P683S, P689A, P699A, P708A, P715A, P717A, P722A, P723S, P728A, P743A, P744A, P746A, P751A, P758A, P759S, P840A, P842A, P850A, P861A, P888A, P890A, U011A, U015A, U022A, U047A, U052A, U056A, U073A, U077A, U086A, U091A, U126A, U132A, U155A, U156A, U157A, U158A, U168A, U170A, U310A, U330S, U333A, U340A, U343S, U344S, U352S, U361S, U364S, U369S, U370S, U396S, U397S, U398S, U405S, U413S, U442A

Material inputs or other information identifying chemical content, and event or process that may have modified the chemical properties after generation. Include data for newly generated waste obtained through VE and/or radiography, information demonstrating neutralization of U134 waste and chemical composition that could affect the isotopic distribution.	WS4	C027A, C041A, C047A, C050A, C051A, C060A, C063A, C064A, C070A, C072A, C076A, C078A, C081A, C083A, C084A, C086A, C090A, C091A, C093A, C094A, C095A, C096A, C099A, C100A, C101A, C102A, C1033S, C1040S, C1041A, C1042A, C1051A, C105A, C1060S, C107A, C1081S, C1088A, C1090S, C1118S, C1124S, C1133S, C1134A, C1143S, C1144S, C1145S, C1147S, C1149S, C1150S, C1151S, C1152S, C1154S, C1156S, C115A, C1160S, C1163S, C1165S, C1169S, C1175S, C1178S, C1179S, C1188S, C1193S, C1195S, C1197S, C1199S, C119A, C1201S, C1205S, C1207S, C1212S, C1213S, C1214S, C1217S, C1218S, C1219S, C1221S, C1225S, C1230S, C1235S, C1238S, C1239S, C123A, C1242S, C1244S, C1255S, C1256S, C1260S, C1265S, C1266S, C1267S, C1269S, C1270S, C1271S, C1280A, C1309A, C1317S, C1318A, C1319S, C1320S, C1321S, C1325A, C1348S, C155A, C162A, C178A, C179A, C181A, C184A, C186A, C187A, C198A, C205A, C245A, C246A, C251A, C253A, C255A, C257A, C258A, C259A, C260A, C261A, C262A, C263A, C269A, C290A, C297A, C298A, C301A, C305A, C306A, C307A, C308A, C309A, C310A, C322A, C342A, C344A, C349A, C350A, C354A, C356A, C359A, C373A, C375A, C385A, C409A, C419A, C423A, C430A, C443A, C446A, C447A, C449A, C450A, C451A, C452A, C458A, C461A, C463A, C464A, C465A, C466A, C467A, C468A, C470A, C471A, C472A, C473A, C477A, C479A, C480A, C481A, C484A, C486A, C488A, C489A, C490A, C493A, C496A, C503A, C505A, C533A, C546S, C574S, C858S, C861A, C865A, C945A, D035A, D036A, D037A, D041A, D044A, D045A, D047A, D048A, D052A, D053A, D055A, D059A, D061A, D070A, D076A, D087S, D095A, D096A, D099S, D107A, D109A, P002A, P006A, P015A, P016A, P021A, P024A, P033A, P035A, P037A, P038A, P052A, P053A, P056A, P060A, P061A, P062A, P067A, P068A, P076A, P078A, P079A, P081A, P083A, P091A, P092A, P094A, P096A, P098A, P1030A, P106A, P108A, P109A, P1101A, P113A, P114A, P1291S, P1292S, P1293S, P1295S, P1296S, P1297S, P1299S, P1300S, P1301S, P1302S, P1303S, P1304S, P1305S, P1306S, P1307S, P1308S, P1317S, P1318S, P1321A, P1332S, P1345A, P1346A, P1347A, P1348A, P1349A, P1350A, P1352A, P1365A, P1366A, P1376S, P1377S, P1378S, P1379A, P1380A, P1381A, P1382A, P1384S, P1387S, P1388A, P1389A, P1390A, P1391A, P1392A, P1393A, P1403S, P1405A, P1417A, P1418A, P1419A, P1432S, P1461S, P1466S, P1472S, P1473A, P1474S, P1483A, P1489S, P1494S, P1496S,

Material inputs or other information identifying chemical content, and event or process that may have modified the chemical properties after generation. Include data for newly generated waste obtained through VE and/or radiography, information demonstrating neutralization of U134 waste and chemical composition that could affect the isotopic distribution.	WS4	P1501S, P1502S, P1505S, P1506S, P1507S, P1511S, P1512S, P1514S, P1515S, P151A, P1521S, P1528S, P1529S, P1530S, P1531S, P1532S, P1533S, P1534S, P1536S, P1537A, P1538S, P1542S, P1544S, P1545S, P1546S, P1547S, P1548A, P1549A, P1551S, P1553S, P1560S, P1563S, P1566S, P1569S, P1570S, P1571S, P1572S, P1573S, P1574S, P1575S, P1576S, P1577S, P1578S, P1580S, P1581S, P1582S, P1583S, P1585S, P1586S, P1587S, P1590S, P1591S, P1593S, P1594S, P1595S, P1596S, P1631S, P1634S, P163A, P1641S, P1642S, P1644S, P1647S, P1649S, P164A, P1654S, P1655S, P1657S, P1658S, P1666S, P1670S, P1673S, P1676S, P1681S, P1682S, P1688S, P1689S, P1691S, P1692S, P1693S, P1694S, P1699S, P1701S, P1704S, P1705S, P1706S, P1708S, P1709S, P1710S, P1711S, P1712S, P1714S, P1715S, P1716S, P1717S, P1719S, P1723S, P1725S, P1726S, P1727S, P1728S, P1729S, P1730S, P1731S, P1738S, P1742S, P1744S, P1746S, P1747S, P1748S, P1749S, P1751S, P1753S, P1754S, P1755S, P1756S, P1763S, P1765S, P1766S, P1767S, P1768S, P1769S, P1771S, P1775S, P1781S, P1782S, P1788S, P1793S, P1794A, P1797S, P1810S, P1823A, P1825A, P1826A, P1827A, P1828A, P1829A, P1830A, P1831S, P1832S, P1839A, P1840A, P1841A, P1842A, P1843A, P1847S, P1851A, P1852A, P1853A, P1854A, P1855A, P1864A, P1962S, P1984S, P1987A, P1988A, P1996A, P1998A, P1999A, P2001A, P2002A, P2008A, P2010A, P2025A, P2044S, P205A, P2061S, P207A, P214A, P215A, P221A, P222A, P223A, P224A, P225A, P282A, P283A, P284A, P285A, P305A, P306A, P307A, P308A, P310A, P313A, P319A, P324A, P328A, P334A, P335A, P336A, P337A, P341A, P343A, P344A, P345A, P347A, P350A, P351A, P354A, P356A, P357A, P359A, P365A, P368A, P369A, P380A, P393A, P400A, P401A, P403A, P404A, P406A, P409A, P417A, P418A, P423A, P426S, P435S, P439A, P442A, P443A, P444A, P446A, P448A, P449A, P450A, P451A, P452A, P453A, P454A, P455A, P456A, P457A, P458A, P460A, P461A, P462A, P463A, P469A, P475A, P485A, P486A, P487A, P489A, P490A, P491A, P492A, P493A, P497A, P498A, P499A, P501A, P503A, P504A, P505A, P506A, P509A, P512A, P516A, P517A, P518A, P519A, P520A, P521A, P522A, P523A, P524A, P527A, P532A, P534A, P539A, P545A, P546A, P552A, P591A, P592A, P593A, P594A, P599A, P604A, P610A, P621A, P632A, P633A, P635A, P636A, P637A, P638A, P649A, P650A, P655S, P657S, P658A, P659A, P662A, P667A,

Material inputs or other information identifying chemical content, and event or process that may have modified the chemical properties after generation. Include data for newly generated waste obtained through VE and/or radiography, information demonstrating neutralization of U134 waste and chemical composition that could affect the isotopic distribution.	WS4	P673A, P680A, P700S, P708A, P709A, P710A, P711A, P712A, P715A, P717A, P721S, P722A, P726S, P728A, P744A, P751A, P752A, P755A, P759S, P808S, P840A, P842A, P850A, P861A, P867S, P879S, P888A, P890A, P953A, U005A, U013A, U019A, U020A, U022A, U030A, U032A, U043A, U047A, U062A, U086A, U097A, U113A, U126A, U132A, U140A, U141A, U156A, U157A, U159A, U164A, U172A, U185A, U189A, U192A, U195A, U197A, U202A, U204A, U205A, U208A, U218A, U308S, U309S, U310A, U317A, U318A, U319A, U326S, U327S, U328S, U330S, U333A, U343S, U344S, U345S, U353S, U355S, U356S, U357S, U364S, U369S, U370S, U374S, U375S, U381S, U385S, U386S, U389S, U390S, U391S, U392S, U397S, U398S, U401S, U402S, U404S, U405S, U407S, U408S, U409S, U416S, U418S, U419S, U420S, U421S, U442A

Material inputs or other information identifying physical waste form, and event or process that may have modified the physical properties after generation. Include data obtained through RTR or VE of newly generated waste and physical composition that could affect the isotopic distribution.	WS5	C005A, C007A, C015A, C018A, C022A, C051A, C063A, C066A, C089A, C090A, C1015A, C1026A, C1029A, C103A, C1041A, C1045A, C104A, C1051A, C1052A, C1060S, C1065A, C1066S, C1067A, C1077A, C1081S, C1088A, C1090S, C1094S, C1118S, C1123A, C1124S, C1130A, C1131A, C1134A, C1152S, C1154S, C1208S, C120A, C1215S, C1216S, C1217S, C1218S, C1219S, C1227S, C1231S, C1235S, C1242S, C1244S, C1265S, C1266S, C1267S, C1270S, C1271S, C1276A, C1277A, C1278A, C1279A, C1280A, C1284A, C1302A, C1309A, C1317S, C1318A, C1326A, C1331S, C1334A, C1347A, C1348S, C1349A, C1356A, C1361S, C184A, C186A, C187A, C204A, C254A, C255A, C257A, C258A, C280A, C289A, C293A, C294A, C295A, C296A, C298A, C299A, C313A, C315A, C316A, C319A, C323A, C330A, C332A, C335A, C337A, C348A, C349A, C350A, C370A, C373A, C375A, C376A, C378A, C379A, C383A, C409A, C419A, C426A, C429A, C430A, C440A, C446A, C447A, C448A, C449A, C450A, C452A, C457A, C461A, C463A, C464A, C465A, C466A, C467A, C468A, C470A, C472A, C473A, C477A, C478A, C479A, C481A, C485A, C486A, C489A, C490A, C491A, C496A, C499A, C504A, C505A, C515A, C520A, C521A, C526A, C530A, C531A, C533A, C534A, C546S, C550S, C566S, C574S, C620A, C789S, C834A, C840S, C841S, C842S, C849A, C851A, C856A, C861A, C865A, C869S, D022A, D042A, D049A, D061A, D094A, D096A, D099S, D107A, D108S, D109A, P001A, P006A, P008A, P009A, P012A, P014A, P015A, P016A, P017A, P021A, P022A, P024A, P032A, P035A, P037A, P038A, P039A, P043A, P049A, P052A, P053A, P056A, P058A, P060A, P061A, P063A, P064A, P076A, P083A, P090A, P094A, P096A, P097A, P098A, P1030A, P104A, P1089A, P1101A, P1109A, P1137A, P113A, P116A, P117A, P1319A, P1321A, P1339A, P1345A, P1346A, P1347A, P1348A, P1349A, P1350A, P1351A, P1352A, P1364A, P1365A, P1366A, P1374A, P1379A, P1380A, P1381A, P1382A, P1388A, P1390A, P1391A, P1392A, P1393A, P1396S, P1403S, P1417A, P1419A, P141A, P1432S, P1466S, P1473A, P1474S, P1483A, P1488S, P1489S, P1491S, P1493S, P1495S, P1501S, P1506S, P1507S, P1521S, P1528S, P1529S, P1531S, P1532S, P1537A, P1547S, P1548A, P1549A, P154A, P1551S, P1557S, P1558S, P1559S, P1563S, P1566S, P1568S, P1578S, P1579S, P1580S, P1585S, P1586S, P1592S, P1593S, P1594S, P1595S, P1596S, P1634S, P1642S, P1644S, P1647S, P1649S, P1656S, P1657S, P1658S, P1666S, P1670S, P1673S, P1676S, P1681S,

Material inputs or other information identifying physical waste form, and event or process that may have modified the physical properties after generation. Include data obtained through RTR or VE of newly generated waste and physical composition that could affect the isotopic distribution.	WS5	P1704S, P1705S, P1709S, P1710S, P1711S, P1714S, P1715S, P1719S, P1725S, P1726S, P1727S, P1728S, P1729S, P1731S, P1747S, P1748S, P1751S, P1753S, P1755S, P1765S, P1766S, P1767S, P1769S, P1775S, P1779S, P1782S, P1787S, P1788S, P1793S, P1794A, P1796S, P1797S, P1799S, P1801S, P1812S, P1819A, P1823A, P1825A, P1826A, P1828A, P1829A, P1839A, P1840A, P1841A, P1842A, P1843A, P1847S, P1849S, P1850S, P1851A, P1852A, P1853A, P1854A, P1855A, P1864A, P1987A, P1988A, P1996A, P1998A, P1999A, P2001A, P2002A, P2007A, P2008A, P2010A, P2023A, P2025A, P2043S, P2044S, P2045S, P2049S, P2054S, P205A, P2064S, P207A, P211A, P212A, P213A, P214A, P215A, P216A, P221A, P222A, P223A, P224A, P225A, P237A, P282A, P283A, P305A, P306A, P312A, P316A, P319A, P328A, P333A, P334A, P335A, P336A, P342A, P343A, P344A, P345A, P347A, P350A, P351A, P354A, P356A, P357A, P365A, P368A, P370A, P372A, P380A, P381A, P384A, P385A, P393A, P399A, P400A, P417A, P418A, P423A, P435S, P439A, P441A, P442A, P443A, P444A, P448A, P449A, P450A, P451A, P452A, P453A, P454A, P455A, P456A, P460A, P461A, P462A, P463A, P465A, P469A, P475A, P486A, P487A, P489A, P490A, P491A, P492A, P493A, P498A, P499A, P501A, P502A, P503A, P504A, P505A, P506A, P507A, P509A, P510A, P511A, P512A, P516A, P517A, P518A, P519A, P520A, P521A, P522A, P523A, P524A, P525A, P526A, P527A, P532A, P539A, P544A, P545A, P546A, P553A, P556A, P567A, P593A, P594A, P599A, P604A, P610A, P621A, P632A, P633A, P635A, P636A, P637A, P638A, P649A, P650A, P654S, P657S, P658A, P659A, P662A, P667A, P670A, P673A, P680A, P683S, P699A, P700S, P708A, P709A, P710A, P711A, P712A, P715A, P717A, P721S, P722A, P726S, P727A, P728A, P735S, P736A, P741A, P744A, P746A, P751A, P752A, P758A, P759S, P816A, P834A, P838A, P840A, P842A, P847S, P850A, P859S, P861A, P878S, P880S, P881S, P882S, P888A, P890A, U004A, U009A, U022A, U028A, U097A, U113A, U126A, U139A, U141A, U145A, U146A, U153A, U154A, U156A, U157A, U159A, U166A, U175A, U176A, U184A, U187A, U189A, U190A, U191A, U192A, U195A, U197A, U198A, U204A, U205A, U206A, U207A, U208A, U218A, U219S, U220S, U223A, U224A, U225A, U230A, U306S, U312S, U317A, U318A, U319A, U326S, U327S, U328S, U330S, U333A, U339S, U343S, U344S, U345S, U351S, U353S, U361S, U370S, U372S, U374S, U375S, U380S, U381S, U383S, U384S, U385S, U386S, U391S, U393S,

Material inputs or other information identifying physical waste form, and event or process that may have modified the physical properties after	WS5	U397S, U401S, U402S, U404S, U408S, U416S, U418S, U419S, U420S, U421S, U422S, U435S, U442A

EPA hazardous waste constituents in the waste stream and Hazardous Waste Numbers assigned. Documentation regarding how the site has historically managed the waste, including the historical regulatory status of the waste (i.e., TRU mixed versus TRU nonmixed waste).	WS6	C021A, C048A, C060A, C064A, C070A, C076A, C078A, C079A, C081A, C083A, C084A, C091A, C093A, C094A, C095A, C096A, C099A, C101A, C102A, C1042A, C1051A, C1063S, C1065A, C1067A, C107A, C1081S, C1115A, C1134A, C1145S, C1146S, C1147S, C1149S, C1150S, C1154S, C1156S, C1160S, C1163S, C1178S, C117A, C1180S, C1188S, C1192S, C1193S, C1199S, C119A, C1201S, C1203S, C1205S, C1207S, C1214S, C1221S, C1235S, C1238S, C1239S, C123A, C1244S, C1255S, C1266S, C1267S, C1280A, C1317S, C1318A, C1319S, C1320S, C1321S, C1339S, C192A, C199A, C205A, C245A, C253A, C255A, C257A, C258A, C260A, C261A, C262A, C263A, C298A, C299A, C313A, C320A, C354A, C458A, C481A, C493A, C509A, C566S, C574S, C604A, C607A, C840S, C841S, C861A, C865A, C948S, D005A, D008A, D009A, D013A, D014A, D015A, D016A, D017A, D018A, D020A, D024A, D025A, D027A, D035A, D036A, D037A, D041A, D044A, D045A, D047A, D048A, D052A, D053A, D055A, D059A, D064A, D070A, D076A, D077A, D078A, D087S, D095A, D096A, D099S, D107A, D113S, D114A, D115S, D116A, P009A, P012A, P013A, P015A, P016A, P017A, P021A, P022A, P023A, P035A, P038A, P049A, P052A, P053A, P056A, P058A, P060A, P061A, P062A, P067A, P079A, P080A, P094A, P1030A, P1085S, P1086S, P1088S, P108A, P1101A, P1109A, P114A, P1326S, P1339A, P1346A, P1349A, P1350A, P1352A, P1374A, P1379A, P1380A, P1381A, P1382A, P1384S, P1389A, P1405A, P1407S, P1411S, P1412S, P1419A, P1466S, P1472S, P1483A, P1489S, P1494S, P1496S, P1501S, P1502S, P1507S, P151A, P1521S, P1528S, P1531S, P1532S, P1533S, P1535S, P1537A, P1540S, P1541S, P1545S, P1547S, P1548A, P1549A, P1553S, P1558S, P1570S, P1579S, P1586S, P1590S, P1593S, P1594S, P1631S, P1641S, P1644S, P1649S, P1666S, P1670S, P1673S, P1681S, P1714S, P1715S, P1723S, P1731S, P1740S, P1741S, P1742S, P1746S, P1748S, P1754S, P1755S, P1761S, P1765S, P1766S, P1768S, P1775S, P1788S, P1799S, P1810S, P1819A, P1823A, P1825A, P1826A, P1830A, P1839A, P1840A, P1841A, P1842A, P1843A, P1851A, P1852A, P1853A, P1854A, P1855A, P1987A, P1988A, P1996A, P1998A, P1999A, P2001A, P2002A, P2008A, P2010A, P2023A, P2025A, P2044S, P205A, P207A, P211A, P212A, P213A, P214A, P215A, P216A, P221A, P222A, P223A, P224A, P225A, P237A, P239A, P282A, P283A, P284A, P285A, P305A, P306A, P307A, P308A, P310A, P312A, P313A, P316A, P324A, P334A,

EPA hazardous waste constituents in the waste stream and Hazardous Waste Numbers assigned. Documentation regarding how the site has historically managed the waste, including the historical regulatory status of the waste (i.e., TRU mixed versus TRU nonmixed waste).	WS6	P335A, P336A, P337A, P351A, P356A, P357A, P365A, P368A, P380A, P393A, P400A, P417A, P418A, P435S, P439A, P442A, P443A, P444A, P448A, P449A, P450A, P451A, P452A, P453A, P454A, P455A, P456A, P460A, P461A, P462A, P486A, P487A, P489A, P490A, P491A, P492A, P503A, P505A, P506A, P509A, P512A, P517A, P519A, P520A, P527A, P532A, P539A, P592A, P593A, P594A, P599A, P604A, P610A, P632A, P633A, P635A, P636A, P637A, P638A, P649A, P650A, P658A, P659A, P662A, P667A, P673A, P680A, P708A, P709A, P710A, P711A, P715A, P717A, P728A, P729A, P733S, P743A, P744A, P751A, P838A, P840A, P842A, P850A, P859S, P861A, P890A, U005A, U011A, U015A, U020A, U022A, U030A, U046A, U059A, U060A, U062A, U082A, U085A, U086A, U087A, U088A, U089A, U090A, U097A, U102A, U103A, U113A, U142A, U184A, U185A, U190A, U192A, U199A, U205A, U206A, U208A, U218A, U236S, U308S, U309S, U320S, U330S, U333A, U343S, U344S, U355S, U356S, U357S, U374S, U375S, U385S, U386S, U389S, U390S, U391S, U398S, U402S, U407S, U408S, U409S

Specification of the isotopic ratios for the 10 WIPP-tracked radionuclides (241Am, 238PU, 239 Pu, 240 PU, 242Pu, 233U, 234U, 238 U, 90 Sr, and 137Cs) and the radionuclides comprising 95% of the hazard.	WS7	C002A, C072A, C1029A, C1041A, C1056S, C1065A, C1066S, C1067A, C1068S, C1081S, C1087S, C1090S, C1091S, C1094S, C1095S, C1133S, C1140S, C1142S, C1143S, C1144S, C1151S, C1152S, C1157S, C1161S, C1168S, C1169S, C1182S, C1188S, C1195S, C1196S, C1198S, C1200S, C1202S, C1211S, C1215S, C1216S, C1217S, C1218S, C1224S, C1225S, C1226S, C1227S, C1231S, C1232S, C1235S, C1243S, C1251S, C1258S, C1266S, C1280A, C1281A, C1309A, C130A, C134A, C137A, C174A, C180A, C184A, C210A, C221A, C255A, C256A, C281A, C285A, C291A, C338A, C348A, C351A, C354A, C358A, C368A, C370A, C371A, C373A, C378A, C379A, C380A, C381A, C383A, C384A, C385A, C387A, C388A, C389A, C390A, C391A, C393A, C394A, C396A, C400A, C401A, C402A, C404A, C405A, C406A, C408A, C409A, C410A, C412A, C413A, C414A, C416A, C417A, C418A, C419A, C420A, C421A, C422A, C423A, C425A, C426A, C427A, C428A, C429A, C430A, C431A, C432A, C433A, C434A, C435A, C436A, C437A, C438A, C439A, C440A, C441A, C442A, C445A, C446A, C447A, C448A, C449A, C450A, C452A, C453A, C464A, C465A, C466A, C467A, C468A, C469A, C470A, C471A, C472A, C477A, C479A, C485A, C488A, C489A, C490A, C491A, C494A, C505A, C506A, C508A, C517A, C523A, C551A, C552S, C566S, C603A, C604A, C840S, C841S, C865A, D022A, D051A, D099S, D101S, D107A, P016A, P024A, P035A, P038A, P053A, P056A, P061A, P062A, P067A, P076A, P078A, P079A, P081A, P083A, P090A, P092A, P094A, P098A, P1030A, P104A, P1109A, P113A, P115A, P117A, P1339A, P1346A, P1347A, P1349A, P1350A, P1351A, P1374A, P1379A, P1380A, P1381A, P1382A, P1387S, P1389A, P1390A, P1391A, P1392A, P1393A, P1403S, P1405A, P1466S, P1472S, P1483A, P1489S, P1491S, P1500S, P1506S, P1507S, P1521S, P1524S, P1529S, P1530S, P1532S, P1533S, P1534S, P1535S, P1536S, P1537A, P1540S, P1541S, P1542S, P1544S, P1547S, P1553S, P1555S, P1556S, P1557S, P155A, P1561S, P1563S, P1565S, P1566S, P1569S, P156A, P1572S, P1573S, P1574S, P1575S, P1576S, P1577S, P1579S, P1584S, P1585S, P1586S, P1589S, P1590S, P1591S, P1593S, P1594S, P1596S, P1634S, P163A, P1644S, P1647S, P1649S, P164A, P1657S, P1658S, P1666S, P1670S, P1673S, P1691S, P1705S, P1706S, P1708S, P1709S, P1711S, P1715S, P1716S, P1717S, P1719S, P1723S, P1728S, P1729S, P1730S, P1731S, P1735S, P1738S, P1741S, P1744S, P1746S, P1748S, P1753S, P1756S, P1758S, P1761S,

Specification of the isotopic ratios for the 10 WIPP-tracked radionuclides (241Am, 238PU, 239 Pu, 240 PU, 242Pu, 233U, 234U, 238 U, 90 Sr, and 137Cs) and the radionuclides comprising 95% of the hazard.	WS7	P1769S, P1771S, P1772S, P1778S, P1780S, P1788S, P1790S, P1792S, P1793S, P1795S, P1796S, P1804S, P1805S, P1806S, P1810S, P1819A, P1823A, P1825A, P1826A, P1839A, P1840A, P1841A, P1842A, P1843A, P1847S, P1851A, P1852A, P1853A, P1854A, P1855A, P1864A, P189A, P190A, P194A, P195A, P1987A, P1988A, P198A, P1996A, P1998A, P1999A, P2001A, P2002A, P2008A, P2010A, P2023A, P2025A, P221A, P222A, P223A, P224A, P227A, P230A, P231A, P232A, P233A, P234A, P235A, P236A, P240A, P282A, P283A, P294A, P295A, P305A, P306A, P307A, P312A, P319A, P322A, P348A, P349A, P353A, P354A, P355A, P357A, P368A, P380A, P381A, P385A, P398A, P400A, P417A, P418A, P423A, P435S, P439A, P442A, P443A, P448A, P449A, P452A, P453A, P454A, P455A, P456A, P460A, P461A, P462A, P463A, P467A, P469A, P472A, P482A, P486A, P487A, P489A, P490A, P491A, P492A, P493A, P499A, P501A, P502A, P503A, P504A, P505A, P506A, P507A, P509A, P510A, P511A, P512A, P513A, P514A, P517A, P518A, P519A, P520A, P521A, P522A, P523A, P524A, P525A, P526A, P527A, P532A, P539A, P540A, P543A, P544A, P545A, P546A, P547A, P548A, P549A, P550A, P551A, P553A, P554A, P555A, P558A, P593A, P594A, P604A, P610A, P611A, P621A, P622A, P632A, P633A, P635A, P636A, P637A, P638A, P649A, P650A, P658A, P659A, P662A, P673A, P680A, P699A, P703A, P708A, P709A, P710A, P711A, P712A, P715A, P719S, P721S, P728A, P743A, P744A, P745A, P751A, P759S, P834A, P838A, P840A, P842A, P850A, P861A, P888A, P890A, P953A, U022A, U047A, U073A, U126A, U137A, U139A, U141A, U142A, U147A, U153A, U154A, U155A, U156A, U157A, U158A, U159A, U160A, U161A, U162A, U166A, U168A, U169A, U170A, U172A, U173A, U184A, U185A, U187A, U189A, U190A, U192A, U195A, U198A, U199A, U202A, U203A, U205A, U208A, U220S, U235S, U237S, U306S, U310A, U311S, U320S, U330S, U331S, U333A, U336S, U337A, U338S, U339S, U342S, U343S, U344S, U345S, U347S, U351S, U352S, U361S, U370S, U372S, U381S, U383S, U385S, U386S, U388S, U389S, U391S, U396S, U397S, U398S, U400S, U405S, U406S, U412S, U414S, U415S, U416S, U418S, U419S, U420S, U421S, U440A, U442A, U444S

Implementing Document: MP-TRUW-8.13

AK Information	AK#<1>	Source Document Reference Number
Generator site TRU waste stream (WS) - specific information		
Documentation identifying the presence of prohibited items listed in Section C-1c of the WIPP-WAP.	WS8	C1029A, C1051A, C1052A, C1070A, C1131A, C1156S, C1276A, C1277A, C1280A, C1281A, C1299S, C1309A, C1310A, C1313A, C1317S, C1318A, C1320S, C1321S, C1331S, C1347A, C1348S, C1349A, C198A, C199A, C214A, C321A, C376A, C392A, C415A, C416A, C466A, C470A, C473A, C511A, C516A, C530A, C531A, C532A, C568S, C574S, C613S, C614S, C615S, C616S, C842S, C861A, D035A, D070A, D087S, D096A, D109A, P001A, P012A, P013A, P014A, P015A, P016A, P017A, P021A, P022A, P024A, P053A, P063A, P1030A, P1101A, P1319A, P1325A, P1351A, P1364A, P1365A, P1366A, P1379A, P1380A, P1381A, P1388A, P1389A, P1403S, P1405A, P1419A, P1466S, P1483A, P1823A, P1825A, P1826A, P1828A, P1829A, P1830A, P1839A, P1840A, P1841A, P1842A, P1843A, P1851A, P1852A, P1853A, P1854A, P1855A, P1987A, P1988A, P1996A, P1998A, P1999A, P2001A, P2002A, P2008A, P2010A, P2025A, P2045S, P2049S, P2050S, P2054S, P215A, P221A, P222A, P223A, P224A, P225A, P237A, P319A, P356A, P357A, P358A, P368A, P370A, P372A, P385A, P399A, P400A, P405A, P412A, P417A, P418A, P439A, P442A, P443A, P461A, P462A, P465A, P486A, P487A, P492A, P525A, P604A, P610A, P632A, P633A, P635A, P636A, P637A, P638A, P649A, P650A, P658A, P659A, P662A, P667A, P673A, P680A, P708A, P709A, P710A, P711A, P712A, P715A, P727A, P728A, P733S, P741A, P744A, P751A, P840A, P842A, P858A, P859S, P861A, P888A, P890A, U113A, U126A, U215A, U223A, U224A, U225A, U236S, U320S, U321A, U330S, U333A, U392S, U435S, U442A
<1> The AK#'s are to be used in the Acceptable Knowledge Source Document Summary to aid in the identification of program and waste stream-specific elements within a given document.		

All required AK information has been compiled and tracking numbers assigned.

AK Expert: Randall C. Morris — Print/Sign — Date: 09/11/14

Site Project Manager: Stan Capenter — Print/Sign — Date: 9.11.14

Waste Stream		
Name:	RPT-TRUW-83, ACCEPTABLE KNOWLEDGE SUMMARY FOR SUPERCOMPACTED DEBRIS WASTE	
Number:	BN510.3	

The mixed waste identified on manifest number _____ and bearing the EPA hazardous waste numbers D004 through D011, D022, D027, D028, D029, D030, D032, D034, D037, D043, F001, F002, F004, F005, F006, F007 and F009 are designated as transuranic (TRU) mixed waste and have been exempted from the land disposal prohibitions of 40 CFR 268 by the Land Withdrawal Act Amendments (Public Law 104-201). This amendment exempts WIPP waste from treatment standards promulgated pursuant to section 3004(m) of the Solid Waste Disposal Act [42 U.S. C. 6924(m)] and are not subjected to the Land Disposal Prohibitions in section 3004(d), (e), (f), and (g) of the Solid Waste Disposal Act.

Hazardous waste number(s) [3]	**Land Disposal Prohibition effective date** [4]
D004	May 26, 2000
D005	May 26, 2000
D006	May 26, 2000
D007	May 26, 2000
D008	May 26, 2000
D009	May 26, 2000
D010	May 26, 2000
D011	May 26, 2000
D022	September 19, 1996
D027	September 19, 1996
D028	September 19, 1996
D029	September 19, 1996
D030	September 19, 1996
D032	September 19, 1996
D033	September 19, 1996
D034	September 19, 1996
D037	September 19, 1996

D043	September 19, 1996
F001	November 8, 1986
F002	November 8, 1996
F004	November 8, 1996
F005	November 8, 1996
F006	July 8, 1989
F007	July 8, 1989
F009	July 8, 1989

AMWTP Advanced Mixed Waste Treatment Project	Waste Stream Profile Form HWN Assignment Worksheet	Form-1187 Rev. 4 Effective: 08/14/13 Page 1 of 1

Implementing Document: MP-TRUW-8.13

WSPF Number: BN510.3

AK Summary Report/Rev. Number: RPT-TRUW-83 Rev.8

HWN	(1) AK ASSIGNED	(2) VE OR RTR TESTING	(3) WSPF	(4) PERMITTED
F001	✔		✔	✔
F002	✔		✔	✔
F003				✔
F004	✔		✔	✔
F005	✔		✔	✔
F006	✔		✔	✔
F007	✔		✔	✔
F009	✔		✔	✔
D004	✔		✔	✔
D005	✔		✔	✔
D006	✔		✔	✔
D007	✔		✔	✔
D008	✔		✔	✔
D009	✔		✔	✔
D010	✔		✔	✔
D011	✔		✔	✔
D022	✔		✔	✔
D027	✔		✔	✔
D028	✔		✔	✔
D029	✔		✔	✔
D030	✔		✔	✔
D032	✔		✔	✔
D033	✔		✔	✔
D034	✔		✔	✔
D037	✔		✔	✔
D043	✔		✔	✔

Carlson, Clydene

From: Blattner, Delisa
Sent: Wednesday, October 23, 2013 8:06 AM
To: Site Documents - DOE
Cc: Records Management-Document Control; 'marcus.pinzel@wipp.ws'; Schweinsberg, Eric; Roberts, Benjamine B; Wells, Jerry L; Jenkins, Talley W Jr; Byram, George; Tedford, Gina; Document Services
Subject: For Approval RPT-TRUW-83 Rev 7B
Attachments: BN510 3 Waste Stream Profile.pdf; DCR-12760 casefile.pdf; RPT-TRUW-83_R7B_with attachments.pdf; RPT-TRUW-83_R7B-redline.pdf

AMWTP has revised the subject document (RPT-TRUW-83) and a draft new WSPF BN-510.3 for the Super-Compacted Debris. Having received DOE-ID's concurrence we are now seeking CBFO review and approval. This new Waste Stream Profile Form (WSPF) is accompanied with the Characterization Information Summary (CIS) and Acceptable Knowledge Summary (AKS). This will be a new profile for the BN-510 waste stream, as we are adding the Subsurface Disposal Area (SDA) waste as feedstock to the Treatment Facility (TF). Please review and provide your review and concurrence.

Attached is DCR-12760 and the updated documents.

Should you have any questions regarding this action, please feel free to contact me.

Thank you,
Delisa Blattner
Document Services
(208)-557-6480

AK4

B-2012-0203
RECORD
JMC 10/02/12

AMWTP Advanced Mixed Waste Treatment Project

AK Source Document Review Summary

Form-1068, Rev. 4
Effective: 01/08/09

Implementing Document: MP-TRUW-8.13

1. Source Document Tracking Number: P609A	**2. Revision:** 7

3. Category

- [x] Published Documentation
- [ ] Unpublished Documentation
- [ ] Correspondence
- [ ] Discrepancy

4. Title/Description Information: BN004 Special Setups Waste Stream Profile Package, December 28, 2005; Change Notice #1, February 15, 2007; Change Notice #2, April 2, 2008; and Change Notice #3, August 5, 2010.

Document Number: N/A

Revision: N/A

Author: AMWTP
CBFO

Date: 12/28/05

5. AK Element	6. Generator Or Waste Type(s)	7. Location in Source Doc.	8. AK Information Summary:
WM3, WM4, WM5, WM6, WM7	RF	all	The WSPF package addresses all of the Waste Management Program (WM) elements by providing either a summary of the information or by identifying references to the documents (e.g. AK baseline and certification procedures) that contain the information; however, only the WM elements that are actually addressed in the package are identified on the Form-1068.
WS1, WS2, WS3, WS4, WS5, WS6, WS7, WS8	RF-004, RF-744, RF-802	AK Summary	AK summary addresses all of the waste stream elements.

9. Document Summary:

Characterization information for the waste stream BN004 (special setups generated at Rocky Flats) submitted to and approved by CBFO. This package includes the following documentation:

- CBFO Approval letter of CN #3 for WSPF BN004, 8/5/10
- Change Notice # 3 for WSPF BN004, 7/27/10
- CBFO Approval letter of CN #2 for WSPF BN004, 4/2/08
- Change Notice # 2 for WSPF BN004, 3/27/08
- CBFO Approval letter of CN #1 for WSPF BN004, 2/15/07
- Change Notice # 1 for WSPF BN004, 2/12/07
- CBFO Approval letter for WSP BN004, 12/28/05
- Waste Stream Profile Form-1195, DQO Form-1597, and CIS Form-1598 for BN004, Rev. 0, 12/28/05
- Acceptable Knowledge Summary, RPT-TRUW-59, Rev. 4, 06/27/12
- Waste Stream Profile Form HWN Assignment Worksheet Form-1187 for BN004, 3/30/06
- TRU Waste Management AK Documentation Checklist Form-1067 for BN004, 9/16/10
- LDR Notification – IDCs RF-004, RF-744 and RF-802, Waste Stream BN004
- AMWTP transmittal letter WSP BN004, SPC-087-2005, 12/21/05

Revision 2 reorganized profile package to only contain the latest version of the above documents.
Revision 3 updated record to include Change Notice #1 and revised AK Summary Report (RPT-TRUW-59).
Revision 4 updated record to include revised Form-1067.
Revision 5 updated record to include Change Notice #2 and revised AK Summary Report (RPT-TRUW-59).
Revision 6 updated record to include Change Notice #3 and revised AK Summary Report (RPT-TRUW-59).
Revision 7 updated record to include revised AK Summary Report (RPT-TRUW-59, Rev. 4).

The above documents address all of the Waste Management Program (WM) elements by providing either a summary of the information or by identifying a reference to the document(s) that contain the information. Therefore, the WM elements identified above are for those elements that are actually addressed in the package.

Previous versions are archived in EDMS.

10. Source Document Data Limitations (if any):

None

11. AK Expert:	Julie Collins	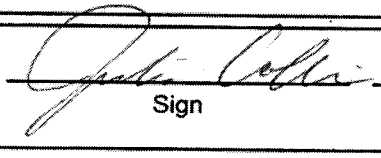	10/2/2012	
	Print	Sign	Date	

P609A R7

Department of Energy
Carlsbad Field Office
P. O. Box 3090
Carlsbad, New Mexico 88221

AUG - 5

Mr. James Cooper, Acting Deputy Manager
U.S. Department of Energy
Idaho Clean-Up Project
Idaho Operations Office (NE-ID)
1955 Fremont Avenue
Idaho Falls, ID 83401-1222

Subject: Review of Update for the WIPP Operating Record (Change Notice #3) Special Setups Waste (BN004, Rev. 0)

Dear Mr. Cooper:

The Carlsbad Field Office (CBFO) has reviewed the Change Notice Number 3 for Special Setups Waste (BN004, Rev. 0) and concluded that the Change Notice is complete and the waste stream determinations were made in accordance with the applicable procedures and guidance.

The CBFO therefore approves the Change Notice as submitted. Using the methods approved by the Advanced Mixed Waste Treatment Project (AMWTP), AMWTP may enter the data into the certification and shipping modules of the WIPP Waste Information System.

If you have questions on this matter, please contact me at (575) 234-7372.

Sincerely,

Donald C. Gadbury, Director
Office of the National TRU Program

cc:

G. Basabilvazo, CBFO	*ED
C. Gadbury, CBFO	ED
S. McCauslin, CBFO	ED
D. Miehls, CBFO	ED
M. Navarrete, CBFO	ED
K. Watson, CBFO	ED
P. Gilbert, LANL	ED
S. Lott, LANL	ED
G. Lyshik, LANL	ED
CBFO, M&RC	

*ED denotes electronic distribution

CBFO:NTP:NC:GS:10-1468:UFC 5900.00

Update for WIPP Operating Record (Change Notice #3)

Special Setups Waste (BN004, Rev. 0)

Please add the following information to the WIPP Operating Record for Waste Stream Profile Form (WSPF) BN004, Revision 0. This waste stream is Special Setups Waste and was approved by DOE/CBFO on December 28, 2005. Change Notice #1 was approved on February 15, 2007 and Change Notice #2 was approved on April 2, 2008.

This WSPF is being revised. The WSPF Form-1195 and AK Summary components are bolded. The updates are:

1. **WSPF Form-1195, Date of audit report approval by NMED**

   Revise NMED audit dates to include 7/2/2004, 1/9/2009 and 1/8/2010

2. **WSPF Form-1195, Title, version, number, and date of documents use for WAP Certification**

   Update the following procedures:

   Certification Plan for INL Transuranic Waste, MP-TRUW-8.1, Rev. 19, 6/30/2010

   Quality Assurance Project Plan, MP-TRUW-8.2, Rev. 13, 6/30/2010

   CCP Transuranic Authorized Methods For Payload Control (CCP CH-TRAMPAC), CCP-PO-003, Rev. 11, 6/4/2009

3. **WSPF Form-1195, Waste Stream Information, WIPP ID**

   Add IN-BN004

4. **WSPF Form-1195, Waste Stream Information, Description from the WTWBIR**

   Change description to:

   See Section 1.2.10 of AK Summary

5. **WSPF Form-1195, Waste Stream Information, Number of Drums**

   Change Number of Drums to 2,302 (55 gallon drums)

Update for WIPP Operating Record (Change Notice #3)

Special Setups Waste (BN004, Rev. 0)

6. **AK Summary for Special Setups Waste (BN004) (RPT-TRUW-59), Acronyms**

Add the following acronyms:

ATWIR	Annual Transuranic Waste Inventory Report
CH-TRAMPAC	Contact Handled Transuranic Waste Authorized Methods for Payload Control
CFR	Code of Federal Regulations
DOE	Department of Energy
EDMS	Electronic Document Management System
HF	hydrofluoric acid
nCi/g	nanocuries per gram
ppm	parts per million
PRQL	program required quantitation limit
RFETS	Rocky Flats Environmental Technology Site
SDA	Subsurface Disposal Area
TSA-RE	Transuranic Storage Area-Retrieval Enclosure
UCL_{90}	90% upper confidence limit
VE	Visual Examination
VOCs	Volatile Organic Compounds
WTS	Waste Tracking System

Also spell out the above acronyms in their first use in the AK Summary, as required.

7. **AK Summary for Special Setups Waste (BN004) (RPT-TRUW-59), Section 1.2.3, Waste Stream Volume**

Replace first line with the following:

2,302 55-gallon containers (480 m^3) – current volume [3]

8. **AK Summary for Special Setups Waste (BN004) (RPT-TRUW-59), Section 1.2.4, Generation Dates**

Change first sentence as follows:

AMWTP stored containers of Rocky Flats Special Setups waste generated from 1968 to 1988. [66]

9. **AK Summary for Special Setups Waste (BN004) (RPT-TRUW-59), Section 1.2.6, Transuranic Waste Baseline Inventory Report (TWBIR) Information**

Change title to:

Waste Isolation Pilot Plant (WIPP) Waste Stream ID

Update for WIPP Operating Record (Change Notice #3)

Special Setups Waste (BN004, Rev. 0)

Change Section 1.2.6 as follows:

Annual Transuranic Waste Inventory Report (ATWIR) Waste Stream ID: IN-BN004 [formerly identified as Transuranic Waste Baseline Inventory Report (TWBIR) Waste Stream ID: IN-W157] [5, 67]

10. **AK Summary for Special Setups Waste (BN004) (RPT-TRUW-59), Section 1.2.10, Description from the TWBIR**

Change title to:

Descriptions from the TWBIR and ATWIR

Replace Section 1.2.10 as follows:

TWBIR waste stream description:

This waste, generated at RF, consists of liquids absorbed on a cement mixture. The liquid wastes were not compatible with aqueous treatment processes and are handled separately due to their plutonium complexing nature. [5]

ATWIR waste stream description:

IN-BN004 (Special Setups) waste was generated from a waste treatment process (predominately laboratory waste) generated in support of plutonium operations at RFETS. Resins and electrochemical milling sludges were also solidified with the liquid waste. This waste stream is comprised of solidified waste assigned IDC ID-RF-004 and ID-RF-802. Special Setups consists of waste >50% by volume inorganic solidified waste. Specifically, small quantities of liquids solidified in large quantities of cement. [a (67)]

a. The description in the Annual Transuranic Waste Inventory Report (ATWIR) will be revised in the next annual update to add IDC RF 744 and revise the waste stream description to "IN-BN004 (Special Setups) waste was generated from treating wastes (predominately laboratory waste) generated in support of plutonium operations at Rocky Flats. Resins and electrochemical milling sludges were also solidified with the liquid waste. This waste stream is comprised of solidified waste assigned IDC ID-RF-004, ID-RF-744 and ID-RF-802."

11. **AK Summary for Special Setups Waste (BN004) (RPT-TRUW-59), Section 1.3.1, Description**

Replace third sentence of first paragraph as follows:

This waste stream is comprised of solidified waste assigned Item Description Codes (IDCs) RF 004, RF 744, and RF 802.

Update for WIPP Operating Record (Change Notice #3)

Special Setups Waste (BN004, Rev. 0)

Replace Table 1-1 as follows:

IDC	WMC	Description
RF 004	S3150	Special Setups Waste – Building 774
RF 744	S3150	Pits 11 and 12 Special Setups
RF 802	S3150	Solidified Laboratory Waste – Building 774

Change second sentence in second paragraph as follows:

A mixture of Portland cement and insulation cement (magnesia cement) was placed in a lined 55-gallon drum and identified with container prefix 744.

Insert following as 3rd paragraph:

Pits 11 and 12 Special Setups (RF 744). RF 744 was assigned by AMWTP to Special Setups containers retrieved from Subsurface Disposal Area (SDA) Pits 11 and 12 and identified with container prefix 744. The process and inputs were the same as waste containers identified as RF 004. The retrieved waste containers were originally generated prior to 1972, shipped to INL and buried in Pits 11 and 12. The waste containers were subsequently retrieved from the pits prior to 1979 and placed in the Transuranic Storage Area-Retrieval Enclosure (TSA-RE).[3]

12. AK Summary for Special Setups Waste (BN004) (RPT-TRUW-59), Section 1.5, Prohibited Items

Revise first paragraph as follows:

The following items are prohibited at the WIPP in accordance with Section B-1c of MP-TRUW-8.2, Quality Assurance Project Plan, and Section 3 of MP-TRUW-8.1, Certification Plan for INL Transuranic Waste. [9, 63]

Add the following as the last bullet:

- Sealed containers greater than four liters.

Add the following sentence to the end of the last paragraph:

Non-hazardous solidification agents Aquaset®, Aquaset II-G®, and Micro-Cel® E may be added to the waste by AMWTP to treat liquid in excess of WIPP-WAC limits. [64, 65]

13. AK Summary for Special Setups Waste (BN004) (RPT-TRUW-59), Section 1.6.2, Hazardous Determination

Add the following as the third sentence under Ignitability:

Furthermore non-hazardous absorbents (i.e., cement, vermiculite, and Oil-Dri®) were added during packaging for purposes of absorbing liquids. Containers identified with liquid in excess of WIPP-WAC limits may be treated using non-hazardous solidification agents (e.g., Aquaset®, Aquaset II-G®, or Micro-Cel® E) to render the waste acceptable prior to shipment. [64, 65]

Replace the third sentence under Corrosivity with the following:

Furthermore, absorbents (i.e., cement, vermiculite, and Oil-Dri®) were added during packaging for purposes of absorbing liquids. [7, 18, 19, 20, 21] Containers identified with liquid in excess of WIPP-WAC limits may be treated using non-hazardous solidification agents to render the waste acceptable prior to shipment (e.g., Aquaset®, Aquaset II-G®,or Micro-Cel® E). [64, 65]

Add the following sentence under Reactivity, before the last sentence:

Containers identified with compressed gases or aerosol cans will have the prohibited items treated/removed prior to shipment. Containers with liquid in excess of WIPP-WAC limits may be treated with non-hazardous solidification agents to render the waste acceptable prior to shipment (e.g., Aquaset®, Aquaset II-G®, or Micro-Cel® E). [64, 65]

14. AK Summary for Special Setups Waste (BN004) (RPT-TRUW-59), Section 1.7, Radionuclides

Delete reference 3 from first sentence.

15. AK Summary for Special Setups Waste (BN004) (RPT-TRUW-59), Section 2.1, Waste Packaging

Add the following paragraph to the end of Section 2.1:

Some of the 55-gallon drums may be overpacked into 83- or 85-gallon drums. Either four 55-gallon drums or two 83- or 85-gallon drums, with either the drum lid filters or the drum lids removed, may be direct loaded into an SWB equipped with approved filters.

16. AK Summary for Special Setups Waste (BN004) (RPT-TRUW-59), Section 3, References

Revise the Note as follows:

AMWTP documents such as procedures, AK reports, and operating instructions, are cited without revision numbers or dates. The most recent revisions of these documents are available through the AMWTP Electronic Document Management System. Previous revisions are available on EDMS.

Update for WIPP Operating Record (Change Notice #3)

Special Setups Waste (BN004, Rev. 0)

Revise references as follows:

7. DOE/WIPP-02-3122, Transuranic Waste Acceptance Criteria for the Waste Isolation Pilot Plant, Rev. 6.5, June 30, 2010

61. CCP-PO-003, CCP Transuranic Authorized Methods For Payload Control (CCP CH-TRAMPAC), Central Characterization Project, Rev 11, June 4, 2009

Replace the following references:

3. NDK-001-10, Memo to file, Estimation of Number of Drums for BN004 Waste Stream, July 5, 2010 [C876A]

9. MP-TRUW-8.1, Certification Plan for INL Transuranic Waste

52. INST-OI-34, Non-Facility Visual Examination Operations [P387A]

Add the following references:

64. Material Safety Data Sheets, Aquaset® (sodium montmorillonite)and Aquaset II-G® (sepiolite), Fluid Tech, January 1, 2005 and November 1, 2008 [P881S]

65. Material Safety Data Sheet, Micro-Cel®E, Celite Corporation, January 17, 2007 [P808S]

66. RCM-001-10, Memo to file, Earliest Pack Date for Rocky Flats Waste Retrieved from Pits 11 and 12, July 5, 2010 [C875S]

67. DOE/TRU-2008-3425, Annual Transuranic Waste Inventory Report – 2009 [P838A]

Reason/Justification for the Changes

Item 1. WSPF Form-1195, the audit report approval dates were updated to reflect all audit dates.

Item 2. WSPF Form-1195, the documents used for WAP certification were revised to reflect the most recent revisions.

Items 3, 4, 9, and 10. WSPF Form-1195, TWBIR information was updated to reflect the WIPP ID and description from the most recent annual update of the TWBIR.

Items 5 and 7. WSPF Form-1195 and AK Summary Report Section 1.2.3, Volume was changed to waste stream due to the addition of Special Setups containers retrieved from the SDA Pits 11 and12 and identified with container prefix 744. The retrieved waste containers were originally generated prior to 1972, shipped to INL and buried in Pits 11 and 12. The waste containers were subsequently retrieved from the pits prior to 1979 and placed in the TSA-RE. The Special Setups waste containers retrieved from Pits 11 and 12

were generated from the same process as the waste containers already included in BN004. Therefore, there is no impact on the EPA hazardous waste numbers assigned to waste stream BN004.

Item 6. AK Summary Report Acronym and Abbreviation list was updated to reflect all acronyms and abbreviations used in the report. The text of the AK Summary was also updated to spell out the first use of each acronym.

Item 8. AK Summary Report Section 1.2.4 was changed to reflect an earlier waste generation date due to the addition of the Special Setups waste containers retrieved from Pits 11 and 12.

Item 11. AK Summary Report Section 1.3.1, Section revised to include a description of Special Setups waste containers retrieved from Pits 11 and 12 and assigned RF-744.

Item 12. AK Summary Report Section 1.5, Prohibited Items was changed to address all prohibited WIPP waste in accordance with MP-TRUW-8.1, Certification Plan for INL Transuranic Waste and MP-TRUW-8.2, Quality Assurance Project Plan. The last paragraph was modified to clarify disposition of containers identified as containing prohibited liquid with non-hazardous absorbents.

Item 13. AK Summary Report Section 1.6.2, Language under Ignitability, Corrosivity and Reactivity was changed to support the recent WIPP Permit Modification concerning prohibited liquids.

Item 14. AK Summary Report Section 1.7, Reference 3 no longer applies.

Item 15. AK Summary Report Section 2.1 was changed to add a paragraph describing potential direct loading of containers into SWBs.

Item 16. AK Summary Section 3, References, was changed to update the note to reflect current practices of Document Control and to identify references that support the information revised or updated in the AK Summary.

Update for the WIPP Operating Record (BN004) certification:

I hereby certify that I have reviewed this Update for WIPP Operating Record, and it is complete and accurate to the best of my knowledge. I understand that this information will be made available to regulatory agencies and that there are significant penalties for submitting false information, including the possibility of fines and imprisonment for knowing violations.

Signature of Site Project Manager	Printed Name and Title	Date
	Eric P. Schweinsberg, SPM	7/22/10

Washington
TRU Solutions LLC

WRES:08:143
UFC:5822.00

April 2, 2008

Mr. Richard Provencher, Deputy Manager
U.S. Department of Energy
Idaho Clean-up Project
Idaho Operations Office (NE.ID)
1955 Fremont Avenue
Idaho Falls, ID 83401-1222

Subject: UPDATE FOR WIPP OPERATING RECORD (CHANGE NOTICE #2) SPECIAL SETUPS WASTE (BN004, REV. 0)

Dear Mr. Provencher:

Washington TRU Solutions LLC, on behalf of the Permittees, has approved the Change Notice Number 2 for Advanced Mixed Waste Treatment Project (AMWTP) Waste Stream Profile Form (WSPF) BN004, Rev. 0, Special Setups Waste. We have concluded that the WSPF is complete and that the waste stream determination was made in accordance with applicable procedures and guidance.

We therefore approve the Change Notice as submitted. Using the methods approved at AMWTP, AMWTP may enter the data into the certification and shipping modules of the WIPP Waste Information System.

If you have any questions on this matter, please contact me at (505) 234-7545.

Sincerely,

W. M. Wierzbicki, Manager
Regulatory Compliance

KSG:ks

Enclosure

P.O. Box 2078 • Carlsbad, New Mexico USA 88221-2078
Phone: (575) 234-7200 • Fax: (575) 234-7083

Update for WIPP Operating Record (Change Notice # 2)

Special Setups Waste (BN004, Rev. 0)

Please add the following information to the WIPP Operating Record for Waste Stream Profile Form (WSPF) BN004, Revision 0. This waste stream is Special Setups Waste and was approved by DOE/CBFO on December 28, 2005. Change Notice #1 was approved on February 15, 2007.

This WSPF is being revised. The WSPF Form-1195 and AK Summary components are bolded. The updates are:

1. **WSPF Form-1195, Date of audit report approval by NMED**

   Add additional audit approval date January 18, 2008.

2. **WSPF Form-1195, Title, version, number, and date of documents use for WAP Certification**

   Update the following procedures:

   Certification Plan for INL Transuranic Waste, MP-TRUW-8.1, Rev. 14, 12/27/07.

   Quality Assurance Project Plan, MP-TRUW-8.2, Rev. 10, 10/25/07.

   Delete the following procedure:

   Contact-Handled Transuranic Waste Authorized Methods for Payload Control, MP-TRUW-8.3, Rev. 6, 07/01/06

   Add the following procedure:

   CCP Transuranic Authorized Methods For Payload Control (CCP CH-TRAMPAC), CCP-PO-003, Rev. 10, 11/16/06.

3. **AK Summary, Special Setups Waste (RPT-TRUW-59), Report Number**

   Revise report number from AMWTP-RPT-TRUW-59 to RPT-TRUW-59.

4. **AK Summary, Special Setups waste (RPT-TRUW-59), Section 1.2.6, Transuranic Waste Baseline Inventory Report (TWBIR) Information**

   Revise the TWBIR number to IN-W157.144

5. **AK Summary, Special Setups waste (RPT-TRUW-59), Section 1.3.1, Description**

   Revise the TWBIR number in Table 1-1 to IN-W157.144

Update for WIPP Operating Record (Change Notice # 2)

Special Setups Waste (BN004, Rev. 0)

6. **AK Summary, Special Setups waste (RPT-TRUW-59), Section 1.5, Prohibited Items**

Add the following bullets to the first paragraph:

- Waste that has ever been managed as high-level waste and waste from tanks specified in Table B-8 of MP-TRUW-8.2, Quality Assurance Plan, unless specifically approved through a Class 3 permit modification. (63)

- Any waste container from a waste stream (or waste stream lot) that has not undergone either radiographic or visual examination of a statistically representative subpopulation of the waste stream in each shipment, as describe in Attachment B7 of MP-TRUW-8.2, Quality Assurance Project Plan. (63)

Revise the first paragraph after the bullets to read:

The absence of prohibited items is determined and documented through acceptable knowledge (AK) and characterization activities. Real-time radiography (RTR) or visual examination (VE) is performed on each container in this waste stream to verify the absence of prohibited items. (51, 52) Containers that are identified as containing prohibited items during RTR or Visual Examination (VE) are treated or rejected, as appropriate. Drums containing prohibited items will not be shipped to WIPP.

7. **AK Summary, Special Setups Waste (RPT-TRUW-59), Section 2.2, Flammability Considerations**

Revise last sentence as follows:

Payloads containing flammable VOCs are managed in accordance with CCP-PO-003, CCP Transuranic Authorized Methods for Payload Control (CCP CH-TRAMPAC). (61)

8. **AK Summary, Special Setups Waste (RPT-TRUW-59), Section 3, References**

Revise the following references:

5. DOE/TRU-2006-3344, Transuranic Waste Baseline Inventory Report 2004, U. S. Department of Energy

7. DOE/WIPP-02-3122, Transuranic Waste Acceptance Criteria for the Waste Isolation Pilot Plant, October 29, 2007

Add the following references:

60. Interim Guidance on Ensuring that Waste Qualifies for Disposal at the Waste Isolation Pilot Plant [P203A]

61. CCP-PO-003, CCP Transuranic Authorized Methods For Payload Control (CCP CH-TRAMPAC), Central Characterization Project, Rev. 10, November 16, 2006

Update for WIPP Operating Record (Change Notice # 2)

Special Setups Waste (BN004, Rev. 0)

62. RPT-TRUW-05, Waste Matrix Code Reference Manual [P399A]

63. MP-TRUW-8.2, Quality Assurance Project Plan (QAPjP)

Reason/Justification for the Changes

The audit report approval dates were updated to reflect the most recent approval date.

The documents used for WAP certification were revised to reflect the most recent revisions and to identify new TRAMPAC procedure required to support change in shipping contractor at AMWTP.

The AK Summary report number was changed to reflect changes in document control protocols.

AK Summary Section 1.2.6, Transuranic Waste Baseline Inventory Report (TWBIR) Information, was changed to update the TWBIR number to reflect the current TWBIR.

AK Summary, Special Setups waste (RPT-TRUW-59), Section 1.3.1, Description, was changed to update the TWBIR number to reflect the current TWBIR.

AK Summary Section 1.5, Prohibited Items, was changed to add two prohibited items to reflect the requirements of the updated Quality Assurance Project Plan, MP-TRUW-8.2, Section B-1c and to incorporate a variety of approved treatment methods.

AK Summary Section 2.2, Flammability Consideration, was updated to reflect new TRAMPAC procedure.

AK Summary Section 3, References, was updated to identify references that support the information revised or updated in the AK Summary.

Update for the WIPP Operating Record (BN004) certification:
I hereby certify that I have reviewed this Update for WIPP Operating Record, and it is complete and accurate to the best of my knowledge. I understand that this information will be made available to regulatory agencies and that there are significant penalties for submitting false information, including the possibility of fines and imprisonment for knowing violations.

Signature of Site Project Manager	Printed Name and Title	Date
[signature]	Eric P. Schweinsberg, SPM	3/27/08

Washington
TRU Solutions LLC

WRES:07:032
UFC:5822.00

February 15, 2007

Mr. Richard Provencher, Deputy Manager
U.S. Department of Energy
Idaho Clean-up Project
Idaho Operations Office (NE.ID)
1955 Fremont Avenue
Idaho Falls, ID 83401-1222

Subject: UPDATE FOR WIPP OPERATING RECORD (CHANGE NOTICE #1) SPECIAL SETUPS WASTE (BN004, REV. 0)

Dear Mr. Provencher:

Washington TRU Solutions, on behalf of the Permittees, has approved the Change Notice Number 1 for Advanced Mixed Waste Treatment Project (AMWTP) Waste Stream Profile Form (WSPF) BN004, Rev. 0, Special Setups Waste. We have concluded that the WSPF is complete and that the waste stream determination was made in accordance with applicable procedures and guidance.

We therefore approve the Change Notice as submitted. Using the methods approved at AMWTP, AMWTP may enter the data into the certification and shipping modules of the WIPP Waste Information System.

If you have any questions on this matter, please contact me at (505) 234-7545.

Sincerely,

William M. Wierzbicki

W. M. Wierzbicki, Manager
Regulatory Compliance

WMW:ks

Enclosure

P.O. Box 2078 • Carlsbad, New Mexico USA 88221-2078
Phone: (505) 234-7200 • Fax: (505) 234-7083

Update for WIPP Operating Record (Change Notice # 1)

Special Setups Waste (BN004, Rev. 0)

Please add the following information to the WIPP Operating Record for Waste Stream Profile Form (WSPF) BN004, Revision, 0. This waste stream is Special Setups Waste and was approved by DOE/CBFO on December 28, 2005.

This WSPF is being revised. The WSPF Form-1195 and AK Summary components are bolded. The updates are:

1. **WSPF Form-1195, Date of audit report approval by NMED**

   Delete audit approval dates 7/03/04 and 10/25/05 and add additional audit approval dates 4/1/05, 12/9/05, and 1/23/07.

2. **WSPF Form-1195, Title, version, number, and date of documents use for WAP Certification**

   Update the following procedures:

   Certification Plan for INL Transuranic Waste, MP-TRUW-8.1, Rev. 12, 1/24/07

   MP-TRUW-8.3, Contact-Handled Transuranic Waste Authorized Methods for Payload Control, Rev. 6, 7/01/06

   MP-TRUW-8.2, Quality Assurance Project Plan, Rev. 8, 1/24/07

3. **WSPF Form-1195, Required Waste Stream Information, new item entitled Waste material parameter weight estimates per unit of waste**

   Add the new item: See Section 1.4.5, Table 1-3 of the AK summary. This is listed as Item 5 in the Change Notice.

4. **AK Summary, Special Setups Waste (AMWTP-RPT-TRUW-59), TABLES**

   Revise Table of Contents per the following:

   Delete Table 1-3 Estimated percentage of various materials in BN004

   Change Table 1-4 Waste material parameters for Special Setups waste (BN004) to Table 1-3 Estimated waste material parameter weights per unit of waste for Special Setups waste (BN004)

5. **AK Summary, Special Setups waste (AMWTP-RPT-TRUW-59), Section 1.4, Process Description**

   Section 1.4.4, Material Inputs; delete last paragraph and delete Table 1-3

   Delete Section 1.4.5 and Table 1-4.

Update for WIPP Operating Record (Change Notice # 1)

Special Setups Waste (BN004, Rev. 0)

Add Section 1.4.5 Waste Material Parameters:

1.4.5 Waste Material Parameters

To estimate the waste material parameter (WMP) weight percentages for BN004, waste material parameter data from 100% of the completed RTR and VE of Special Setups waste drums were obtained from the AMWTP Waste Tracking System (WTS) database on October 11, 2006. This represents 49% of the estimated number of drums for this waste stream. The Special Setups waste was generated at RF from 1971 through 1988. Drums evaluated to estimate the WMP weights per unit of waste were generated from 1972 through 1988. Approximately 3% of the waste was generated prior to 1972. AK indicates that the waste generated in 1971 is similar to the wastes that have undergone RTR and VE. Therefore, the WTS data is representative of the waste stream. WTS is AMWTP's comprehensive, DOE-audited waste tracking database in which all waste containers are tracked cradle-to-grave and all related characterization data are stored. A statistical analysis of the RTR and VE data was performed to estimate WMP weights (by percent) for Special Setups waste, excluding packaging, in accordance with the requirements of MP-TRUW-8.13, Collection, Review, and Management of Acceptable Knowledge Documentation, and are summarized in Table 1-3. [50, 57, 58, 59]

Table 1-3. Estimated waste material parameter weights per unit of waste for Special Setups waste (BN004).

Waste Material Parameters	Weight per Unit Waste by Percent
Iron-based Metals/Alloys	<1
Aluminum-based Metals/Alloys	<1
Inorganic matrix	99
Other Inorganic Materials	<1
Cellulosics	<1
Plastics (waste materials)	<1
Rubber	<1

Although individual drums in this waste stream may contain other homogenous solid waste and debris materials, the waste stream as a whole will be greater than 50%, by volume, inorganic solidified homogeneous solids [2, 50]

6. **AK Summary, Special Setups Waste (AMWTP-RPT-TRUW-59), Section 2, Shipping Considerations**

Section 2.2 Flammability Considerations, change to read as follows:

The payload containers in the waste stream must comply with the Contact-Handled Transuranic Waste Authorized Methods for Payload Control (CH-TRAMPAC) requirements. As specified in the CH-TRAMPAC, a determination of compliance with

the flammable gas limits will be performed for volatile organic compounds (VOCs), hydrogen, and methane. Headspace gas sampling and analysis is performed when required by the WAP and/or CH-TRAMPAC. At a minimum, the headspace gas analytical results are evaluated to determine the total concentration of flammable VOCs present in the waste. Payload containers, including those with headspace gas results exceeding 500 ppm flammable VOCs, are evaluated for compliance with applicable CH-TRAMPAC requirements prior to shipment. Payloads containing flammable gases are managed in accordance with MP-TRUW-8.3, Contact-Handled Transuranic Waste Authorized Methods for Payload Control (CH-TRAMPAC).

7. **AK Summary, Special Setups Waste (AMWTP-RPT-TRUW-59), Section 3, References**

Update reference number 50 to Memorandum to File from Tim Venneman, "Waste Material Parameter Weight Calculations and Supporting Data to Determine Waste Material Parameter Weight per Unit of Waste." TV-001-07, January 19, 2007. (C534A)

Add the following as reference number 57: MP-TRUW-8.13, Collection, Review and Management of Acceptable Knowledge Documentation, Rev. 15, January 2007.

Add the following as reference number 58: BBWI-Generated Drum Data, including Data from the Transuranic Waste Management Information System (TWMIS). (U127A)

Add the following as reference number 59: AMWTP-RPT-TRUW-56, Acceptable Knowledge Document for INL Stored Transuranic Waste – Rocky Flats Plant, Rev. 0, August 2006. (P469A)

Reason/Justification for the Change

The NMED audit report approval dates were revised and updated to reflect the approval dates for audits conducted subsequent to the WSPF submittal and to delete the approval dates for non-S3000 audits or recertification (i.e., 7/2/04 was the approval date for the HSG system and 10/25/05 is a recertification date for S3000).

Documents used for WAP certification were revised to reflect the most recent revisions.

New item entitled waste material parameter weight estimates per unit of waste was added to WSPF Form 1195 as required by MP-TRUW-8.2, Quality Assurance Project Plan, Section B3-12b.

Table of Contents for the AK Summary was revised to accommodate changes required by the revised WIPP Hazardous Waste Facility Permit requirements as described in MP-TRUW-8.2, Quality Assurance Project Plan, Section B3-12b.

Table 1-3 and last paragraph were deleted from Section 1.4.4 of the AK Summary because cellulosic, plastic, and rubber information was incorporated into Section 1.4.5, Waste Material Parameters.

Update for WIPP Operating Record (Change Notice # 1)

Special Setups Waste (BN004, Rev. 0)

Waste material parameter weight estimates per unit of waste and method for determining those estimates have been incorporated into Section 1.4.5 and Table 1-3 of the AK Summary to meet the revised WIPP Hazardous Waste Facility Permit requirements as described in MP-TRUW-8.2, Quality Assurance Project Plan, Section B3-12b.

Flammability consideration was changed to clarify the method used for determining flammability as described in MP-TRUW-8.2, Quality Assurance Project Plan, Section B3-11a.

Special Setups Waste (BN004) AK Summary reference list was updated to identify references that support the information revised or updated in the AK Summary.

Update for the WIPP Operating Record (BN004) certification:
I hereby certify that I have reviewed this Update for WIPP Operating Record, and it is complete and accurate to the best of my knowledge. I understand that this information will be made available to regulatory agencies and that there are significant penalties for submitting false information, including the possibility of fines and imprisonment for knowing violations.

Signature of Site Project Manager	Printed Name and Title	Date
Eric P. Schweinsberg	Eric P Schweinsberg, SPM	2/12/07

Washington
TRU Solutions LLC

WRES:05:183
UFC:5822.00

December 28, 2005

Mr. Richard Provencher, Deputy Manager
U.S. Department of Energy
Idaho Clean-up Project
Idaho Operations Office (NE.ID)
1955 Fremont Avenue
Idaho Falls, ID 83401-1222

Subject: TRANSMITTAL OF APPROVED ADVANCED MIXED WASTE TREATMENT PROJECT WASTE STREAM PROFILE FORM NUMBER BN004, SPECIAL SETUPS WASTE

Dear Mr. Provencher:

Washington TRU Solutions LLC, on behalf of the Permittees, has evaluated the Advanced Mixed Waste Treatment Project (AMWTP) Waste Stream Profile Form (WSPF) BN004, Special Setups Waste. We have concluded that the WSPF is complete and that the waste stream determination was made in accordance with applicable procedures and guidance.

The Permittees therefore approve the WSPF as submitted. Using the methods approved at AMWTP, the AMWTP may enter the data into the certification and shipping modules of the WIPP Waste Information System.

If you have any questions, please contact me at (505) 234-7545 or (505) 706-0055.

Sincerely,

D. T. Bignell, Manager
Regulatory Compliance

DTB:rdr

P.O. Box 2078 • Carlsbad, New Mexico USA 88221-2078
Phone: (505) 234-7200 • Fax: (505) 234-7083

cc: F. Marcinowski, DOE HQ *ED
A. Holland, CBFO ED
R. McCallister, CBFO ED
M. Navarrete, CBFO ED
K. Watson, CBFO ED
G. Girard, DOE-ID ED
J. Ziemianski, DOE-ID ED
B. Edgerton, DOE-ID ED
T. Jenkins, DOE-ID ED
C. Maggart, DOE-ID ED
J. Medema, DOE-ID ED
J. Wells, DOE-ID ED
E. Schweinsberg, BNG ED
S. Carpenter, AMWTP ED
R. Chatfield, WTS ED
D. Hofer, WTS ED
G. Johnson, WTS ED
D Kump, WTS ED
D. Speed, WTS ED
D. Standiford, WTS ED
M. Strum, WTS ED
R. Chavez, WRES ED
R. Kehrman, WRES ED
R. Reeves, WRES ED
V. Waldram, LANL ED
P. Gilbert, LANL ED
CBFO M&RC

*ED denotes Electronic Distribution

AMWTP Advanced Mixed Waste Treatment Project	Waste Stream Profile Form HWN Assignment Worksheet	AMWTP Form-1195 Rev. 2 Effective Date: 11/30/04 MP-TRUW-8.14 Page 1 of 4

WASTE STREAM PROFILE FORM

Waste Stream Profile Number: BN004, Rev. 0

Generator site name: Advanced Mixed Waste Treatment Project
Technical contact: Eric Schweinsberg

Generator site EPA ID: ID4890008952
Technical contact phone number: (208) 557-6425

Date of Audit report approval by NMED: 12/23/03, 7/03/04, 10/25/05

Title, version number, and date of documents used for WAP certification:
Certification Plan for INEEL Contact-Handled (CH-TRU) Transuranic Waste, MP-TRUW-8.1, Rev. 9, 6/15/05
Contact-Handled Transuranic Waste Authorized Methods for Payload Control (CH-TRAMPAC), MP-TRUW-8.3, Rev. 4, 7/13/05
Quality Assurance Project Plan (QAPjP), MP-TRUW-8.2, Rev. 5, 6/15/05

Did your facility generate this waste? ☐Yes ☒No If no, provide the name and EPA ID of the original generator:
Rocky Flats Environmental Technology Site, CO7890010526

Waste Stream Information[1]

WIPP ID: IN-W157
Summary Category Group: S3000

Waste Matrix Code Group: Solidified Inorganics
Waste Stream Name: Special Setups Waste

Description from the WTWBIR: This waste, generated at Rocky Flats Plant, consists of liquids absorbed on a cement mixture. The liquid wastes were not compatible with the aqueous treatment processes and were handled separately due to their plutonium complexing nature.

Defense TRU Waste: (Ref. 1) ☒Yes ☐No Check One: ☒CH ☐RH

Number of SWBs 0 Number of Drums 2,102 (55 gallon drums) Number of Canisters 0

Batch Data report numbers supporting this waste stream characterization: See Characterization Information Summary, Table 5

List applicable EPA Hazardous Waste Codes:[3] D006, D007, D008, D011, D029, F001, F002, F005, F006, F007 and F009

Applicable TRUCON Content Codes: ID111/ID211

Acceptable Knowledge Information[1]

[For the following, enter supporting documentation used (i.e., references and dates)]

Required Program Information

Map of site: See Reference List, No. 1, Section 3, Figure 3-1; No. 2
Facility mission description: See Reference List No. 1, Section 3.1, and No. 3
Description of operations that generate waste: See Reference List, No. 1 Sections 24, and No. 9

Waste identification/categorization schemes: See Reference List, No. 4
Types and quantities of waste generated: See Reference List, No. 1 Section 24, Nos. 3, 5, and 6
Correlation of waste streams generated from the same building and process, as appropriate: See Reference List, No. 1

Waste certification procedures: See Reference List, Nos. 7 and No. 8

Required Waste Stream Information

Area(s) and building(s) *from which the waste stream was generated:* See Reference List, Nos. 1 Section 24 and 9
Waste stream volume and time period of generation: See Reference List, No.s. 1 Section 24 and 9
Waste generating process description for each building: See Reference List, Nos. 1 Section 24 and 9
Process flow diagrams: See Reference List, No. 9 Section 1.4.2 for list of references for the process flow diagrams
Material inputs or other information identifying chemical/radionuclide content and physical waste form: See Reference List, No. 9

AMWTP Advanced Mixed Waste Treatment Project	**Waste Stream Profile Form HWN Assignment Worksheet**	*AMWTP Form-1195* **Rev. 2** **Effective Date: 11/30/04** **MP-TRUW-8.14** **Page 2 of 4**

Which Defense Activity generated the waste: (check one)

☒	Weapons activities including defense inertial confinement fusion	☐	Naval Reactors development
☐	Verification and control technology	☐	Defense research and development
☐	Defense nuclear waste and material by products management	☐	Defense nuclear material production
☐	Defense nuclear waste and materials security and safeguards and security investigations		

Supplemental Documentation See Reference List, No. 1

Process design documents: See Reference List, No. 1
Standard operating procedures: See Reference List, No. 1
Safety Analysis Reports: See Reference List, No. 1
Waste packaging logs: See Reference List, No. 1
Test plans/research project reports: See Reference List, No. 1
Site databases: See Reference List, No. 1
Information from site personnel: See Reference List, No. 1
Standard industry documents: See Reference List, No. 1
Previous analytical data: See Reference List, No. 1
Material safety data sheets: See Reference List, No. 1
Sampling and analysis data from comparable/surrogate Waste: See Reference List, No. 1
Laboratory notebooks: See Reference List, No. 1

Sampling and Analysis Information

For the following, when applicable, enter procedure title(s), number(s) and date(s))

Radiography: See Reference List, No. 10
Visual Examination: See Reference List, No. 11

Headspace Gas Analysis

VOCs: See Reference List, Nos. 12 and 21
Flammable: See Reference List, Nos. 12 and 21
Other gases (specify): N/A

Homogeneous Solids/Soils/Gravel Sample Analysis *(See Reference List for Dates)*

Total metals: See Reference List, Nos. 13, 14, 15, and 20
PCBs: N/A
VOCs: See Reference List, Nos. 16 and 20
Nonhalogenated VOCs: See Reference List, Nos. 17 and 20
Semi-VOCs: See Reference List, Nos. 18, 19 and 20
Other (specify): N/A

Waste Stream Profile Form Certification:

I hereby certify that I have reviewed the information in this Waste Stream Profile Form, and it is complete and accurate to the best of my knowledge. I understand that this information will be made available to regulatory agencies and that there are significant penalties for submitting false information, including the possibility of fines and imprisonment for knowing violations.

Signature of Site Project Manager	Printed Name and Title	Date
R Eckenbaum for EPS per telecon	EPA 12/28/05 Eric P Scheveirs berg	12/28/05

NOTE: (1) Use back of sheet or continuation sheets, if required.
(2) If radiography, visual examination, headspace gas analysis, and/or homogeneous solids/soils/gravel sample analysis were used to determine EPA Hazardous Waste Codes, attach signed Characterization Information Summary documenting this determination.

Waste Stream Profile Continuation Sheet

Reference List

1. Acceptable Knowledge Document for INEEL Stored Transuranic Waste – Rocky Flats Plant Waste, INEL-96/0280, Rev. 3, February 28, 2003. (P368A)
2. Site Plan of the Advanced Mixed Waste Treatment Facility, DWG-5232-52-0101, Rev. 0, April 1999.
3. AMWTP TRU Waste Management Acceptable Knowledge Elements, AMWTP-RPT-TRUW-06, Rev. 4, August 2005.
4. AMWTP Waste Stream Designations, AMWTP-RPT-TRUW-12, Rev. 5, November 2005.
5. Estimated Earthen and Geofabric Covered TRU Waste Inventory in the TSA at Radioactive Waste Management Complex (RWMC), RWMC EDF-837, August 1995.
6. Container Inventory Report for WMF-629 thru WMF-633 (TRIPS query), December 2002.
7. Certification Plan for INEEL Contact-Handled Transuranic Waste, MP-TRUW-8.1, Rev. 9, June 2005.
8. Advanced Mixed Waste Treatment Project TRU Waste Certification, MP-TRUW-8.5, Rev. 16, December 2005.
9. Acceptable Knowledge Summary for Special Setups Waste, AMWTP-RPT-TRUW-59, Rev. 0, December 2005.
10. Real Time Radiography Operations, INST-OI-12, Rev. 23, August 2005.
11. Visual Examination Operating Procedures and Data Reporting, INST-OI-34, Rev. 12, October 2005.
12. Drum Vent/Headspace Gas Sample Operations, INST-OI-13, Rev. 20, March 2005.
13. Microwave Assisted Digestion of Homogeneous Solids, Soil and Gravel, INEEL Analytical Laboratories Department, Analytical Chemistry Methods Manual, ACMM-8909, Rev. 9, January 2005
14. Determination of Mercury by CVAA for TRU Waste Characterization, INEEL Analytical Laboratories Department, Analytical Chemistry Methods Manual, ACNMM-2810, Rev. 3, January 2005
15. Determination of Metals by ICP-AES for TRU Waste Characterization, INEEL Analytical Laboratories Department, Analytical Chemistry Methods Manual, ACNMM-2901, Rev. 3, January 2005
16. Volatile Organic Compounds by Gas Chromatography/Mass Spectrometry, INEEL Analytical Laboratories Department, Analytical Chemistry Methods Manual, ACNMM-9260, Rev. 14, December 2005
17. Determination of Nonhalogenated Volatile Organics by Gas Chromatography, INEEL Analytical Laboratories Department, Analytical Chemistry Methods Manual, ACNMM-9441, Rev. 11, December 2004
18. Semi-Volatile Organic Compounds by Gas Chromatography/Mass Spectrometry, INEEL Analytical Laboratories Department, Analytical Chemistry Methods Manual, ACNMM-9270, Rev. 8, January 2005

Waste Stream Profile Continuation Sheet

19. Sample Preparation for Semi-Volatile Organic Compounds and Polychlorinated Biphenyls, INEEL Analytical Laboratories Department, Analytical Chemistry Methods Manual, ACNMM-9500, Rev. 11, December 2004

20. RCRA Statistical Sampling, MP-TRUW-8.25, Rev. 11, October 2005.

21. HGAS Sampling and Analysis Operations, INST-OI-43, Rev. 12, September 2005.

22. Waste Isolation Pilot Plant Hazardous Waste Facility Permit, New Mexico Environment Department, NM4890139088-TSDF, October 2005.

23. Contact-Handled Transuranic Waste Acceptance Criteria for the Waste Isolation Pilot Plant, U. S. Department of Energy, Carlsbad Field Office, Waste Isolation Pilot Plant, DOE/WIPP 02-3122, Rev. 3, April 2005.

24. AMWTP Memorandum, Sampling Plan for BN004 – Lot 1-SPC-069-2005, October 2005.

25. Drum Coring Operations, INST-OI-16, Rev. 20, October 2005.

Characterization Information Summary

Introduction

Advanced Mixed Waste Treatment Project (AMWTP) has compiled Acceptable Knowledge (AK) information for waste stream BN004 as required by the Waste Isolation Pilot Plant (WIPP) Waste Analysis Plan (WAP) and the Contact-Handled Transuranic Waste Acceptance Criteria (CH-WAC).[22, 23] In addition, AMWTP has conducted confirmatory testing and analysis using real time radiography (RTR) or visual examination (VE), headspace gas sampling and analysis, solid sampling and analysis, and radioassay.

This Characterization Information Summary (CIS) presents the analytical data from five containers for the total solids analysis and 18 other containers for headspace gas analysis. The headspace analytical data associated with the five containers that were solid sampled were not included in the headspace gas analysis. These data meet the necessary requirements for confirmatory characterization. Headspace gas analysis from the 18 containers is presented in Tables 1A and 1B. Solid sampling data from five containers is summarized in Tables 2, 3A, 3B, 4A, and 4B. Table 5 lists the correlation of container numbers to characterization data packages. Table 6 presents the RTR/VE summary of prohibited items and AK confirmation. Table 7 presents the correlation between the container number, the headspace gas sample number, and the solid sample numbers.

Solid sampling was performed on randomly selected containers obtained from BN004–Lot 1, Special Setups Waste from the Rocky Flats Plant. BN004–Lot 1 consists of 870 drums of mixed-transuranic waste.

Data Results

The data in this CIS are obtained from the required ("n") samples from solid sampling and analysis. The data is used to determine the mean concentrations and the 90% upper confidence level (UCL_{90}) for toxicity characteristic compounds and to assign and/or confirm hazardous waste numbers (HWNs) for the BN004 waste stream.

The statistical evaluation of the analytical data collected for BN004-Lot 1 is presented in Tables 1A, 2A, 3A, and 4A. Table 5 lists the correlation of container number to solids analysis data packages.

HWNs assigned by AK are applied to the waste stream even if headspace gas analytical results and solid sampling analytical results for the assigned compounds are not above the program required quantitation limit (PRQL). There were no solids sampling UCL_{90} results above the PRQLs for toxicity characteristic metals. The solid sampling results and HSG sampling results for VOCs reflected the UCL_{90} for methanol above the PRQL. However, the waste stream was determined not to be ignitable; therefore, the D001 and F003 HWNs were not applied. There were no other VOC analytes with UCL_{90} values above the PRQL for either the HSG or solid sampling results. AK data indicate that there are no semi-volatile organic compounds (SVOCs)

Characterization Information Summary

present in the waste, and there were no solid sampling results above the PRQL for SVOCs. The HWN assignment for this waste stream includes:

- Toxicity characteristic metals – D006 (cadmium), D007 (chromium), D008 (lead), and D011 (silver)
- Toxicity characteristic organics – D029 (1,1-dichloroethylene)
- Listed codes for organics – F001 and F002 (1,1,1- trichloroethane, trichloroethylene, tetrachloroethylene, and 1,1,2-trichloro-1,2,2-trifluoroethane), F001 (carbon tetrachloride), F002 (methylene chloride), F005 (benzene, methyl ethyl ketone and toluene)
- Listed codes from electroplating operations – F006, F007, and F009 (spent cyanide electroplating wastes)

Solid sampling results and headspace gas results confirm AK. No additional EPA HWNs are required. One constituent (ethanol, CAS No. 64-17-05) was detected as VOC tentatively identified compounds (TICs) in over 25 percent of the headspace confirmatory samples collected; however, this constituent is not listed in 40 CFR 261, Appendix VIII and thus will not be added as a target analyte for this waste stream.

AMWTP Advanced Mixed Waste Treatment Project	**Reconciliation with Data Quality Objectives**	AMWTP Form-1597 Rev. 0 MP-TRUW-8.11 Effective Date: 12/06/04 Page 1 of 1

I certify by signature (below) that sufficient data have been collected to determine the following program-required waste parameters:

WSPF# BN004-Lot 1 Reconciliation

Data Quality Objective	Yes	No	N/A	Comment
1. Have all containers in the lot been assigned an appropriate Waste Matrix Code?	✓			
2. Have waste material parameter weights been established for each container in the lot?	✓			
3. Does each container of waste contain TRU radioactive waste?	✓			
4. Have mean concentrations, UCL_{90} values for the mean concentration, standard deviations, and the number of samples collected for each VOC in the headspace gas of waste containers in the waste stream lot been evaluated against the constituent hazardous waste number assignments?	✓			
5. Has the potential flammability of TRU waste headspace gases been evaluated for the lot?	✓			Containers will be evaluated on an individual basis using headspace gas analysis and WWIS.
6. Have mean concentrations, UCL_{90} for the mean concentrations, standard deviations, and number of samples collected for VOCs, SVOCs, and metals in the waste stream (if applicable) lot been evaluated against the constituent hazardous waste number assignments?	✓			
7. Does the waste stream exhibit a toxicity characteristic (TC) under 40 CFR Part 261, Subpart C?	✓			
8. Can the waste stream be classified as hazardous or nonhazardous at the 90-percent confidence level?	✓			
9. Have a sufficient number of waste containers been visually examined (as a QC check on radiography) to determine with a reasonable level of certainty that the UCL_{90} for the miscertification rate is less than 14 percent for the summary category group?	✓			
10. Was an appropriate packaging configuration and Drum Age Criteria (DAC) applied and documented in the headspace gas sampling documentation and was the drum age criteria met prior to sampling?	✓			
11. Have all TICs been appropriately identified and reported in accordance with the requirements of Section B3-1 for the lot?	✓			
12. Have the overall completeness, comparability, and representativeness QAOs been met for each of the analytical and testing procedures as specified in Sections B3-2 through B3-9 for the lot?	✓			
13. Have the PRQLs for all analyses been met for the lot?	✓			

12/28/05

R A Eckenbar for EPS per telecon — Signature of Site Project Manager

Eric P Schweinsberg — Printed Name

12/28/05 — Date

AMWTP Advanced Mixed Waste Treatment Project	Characterization Information Summary Report	AMWTP Form-1598 Rev. 0 MP-TRUW-8.14 Effective Date: 11/30/04 Page 1 of 17

WSPF Number: BN004, Rev. 0, (Lot 1)

SQAO [signature] Date: 12/28/05
SQAO signature indicates that the information presented in this package is consistent with analytical batch reports.

SPM [signature] for [signature] Date: 12/28/05 12/28/05
SPM signature indicates concurrence with all information presented in this report.

telecon

Characterization Description:

Drum selection and quantity of drums for Totals Analysis, Reduced Headspace Gas Sampling, and/or Newly Generated Soils/Gravel have been evaluated and meet the requirements established in MP-TRUW-8.25, *RCRA Statistical Sampling*.[20]

Y ☒ N ☐ NA ☐

L Eschenbaum for EPS per telecon — 12/28/05

SPM Signature — Date

For "N" or "NA" provide rationale.

Table 1A. Headspace Gas Summary Data. BN004-Lot 1

ANALYTE	Number of Samples	# of Samples above MDL [a]	Transformation Used [c]	Maximum (ppmv)	Mean (ppmv)	Standard Deviation (ppmv)	Upper 90 % confidence limit (ppmv)	Transformed PRQL	PRQL (ppmv)	EPA Code
1,1-Dichloroethane [c]	18	2	Natural log	2.14	0.35	0.81	0.60	2.30	10	N/A
1,1-Dichloroethylene [c]	18	4	Natural log	2.48	0.87	0.68	1.08	2.30	10	D029 [d]
1,1,1-Trichloroethane [c]	18	9	Natural log	4.14	1.65	1.53	2.13	2.30	10	F001, F002 [d]
1,1,2-Trichloro-1,2,2-trifluoroethane	18	0	None	2.35	1.72	0.46	[b]	-	10	F001, F002 [d]
1,1,2,2-Tetrachloroethane	18	0	None	2.35	1.18	0.85	[b]	-	10	N/A
1,2-Dichloroethane	18	0	None	2.35	1.35	0.73	[b]	-	10	N/A
1,2,4-Trimethylbenzene [f]	18	0	None	2.35	1.18	0.85	[b]	-	10	N/A
1,3,5-Trimethylbenzene [f]	18	0	None	2.30	1.20	0.80	[b]	-	10	N/A
Acetone	18	0	None	25.50	12.83	9.22	[b]	-	100	N/A
Benzene	18	2	None	5.00	1.57	1.29	1.97	-	10	F005 [d]
Bromoform	18	0	None	2.00	1.10	0.65	[b]	-	10	N/A
Butanol	18	0	None	27.50	24.83	1.94	[b]	-	100	N/A
Carbon disulfide [f]	18	0	None	2.50	1.70	0.58	[b]	-	10	N/A
Carbon tetrachloride [c]	18	1	Natural log	2.83	0.42	0.75	0.66	2.30	10	F001 [d]
Chlorobenzene	18	0	None	2.10	1.17	0.68	[b]	-	10	N/A
Chloroform	18	0	None	2.30	1.20	0.80	[b]	-	10	N/A
Chloromethane [g]	18	0	None	2.60	1.70	0.65	[b]	-	10	N/A
cis-1,2-Dichloroethylene	18	0	None	2.25	1.25	0.73	[b]	-	10	N/A
Cyclohexane [f]	18	1	None	3.50	1.29	0.94	1.59	-	10	N/A
Ethyl benzene [c]	18	2	Natural log	7.44	0.92	2.42	1.68	2.30	10	N/A
Ethyl ether	18	0	None	2.30	1.60	0.51	[b]	-	10	N/A
M&p-Xylene [c]	18	2	Natural log	8.46	0.91	2.78	1.78	2.30	10	N/A
Methanol [c]	18	17	Natural log	9.47	7.50	1.59	8.00	4.61	100	N/A [h]
Methyl ethyl ketone	18	0	None	24.50	13.50	8.00	[b]	-	100	F005 [d]
Methyl isobutyl ketone	18	0	None	19.50	16.50	2.18	[b]	-	100	N/A
Methylene chloride	18	0	None	2.30	1.30	0.73	[b]	-	10	F002 [d]
o-Xylene [c]	18	2	Natural log	7.00	0.85	2.19	1.54	2.30	10	N/A
Tetrachloroethylene	18	0	None	1.85	1.05	0.58	[b]	-	10	F001, F002 [d]
Toluene [c]	18	8	Natural log	3.40	0.87	1.02	1.19	2.30	10	F005 [d]
trans-1,2-Dichloroethylene	18	0	None	2.25	1.22	0.75	[b]	-	10	N/A
Trichloroethylene [c]	18	6	Natural log	2.20	0.57	0.68	0.78	2.30	10	F001, F002 [d]

a. When a measurement is reported as below detection, one-half the analysis method detection limit (MDL) is used. Note that the MDL for a given analyte may vary from sample to sample.

b. The mean and standard deviation presented are the mean and standard deviation of the MDL after dividing by 2. All measurements are below detection; therefore, the upper 90% confidence limit is not calculated.

c. The maximum, mean, standard deviation, UCL_{90}, and PRQL are presented as transformed values

d. The HWNs for these constituents are assigned based on AK. HWNs assigned by AK are applied to the waste stream even if headspace gas analytical results for the assigned compounds are not above the PRQL.

e. The Shapiro-Wilk test for normality was applied to data prior to determination of the maximum, mean, SD, UCL_{95}, and PRQL.[20]

f. Cyclohexane (CAS No. 110-82-7), 1,2,4-trimethylbenzene (CAS No. 95-63-6), 1,3,5-trimethylbenzene (CAS No. 108-67-8) and carbon disulfide (CAS No. 75-15-0) are not target analytes for this waste stream but will be reported because they have been added as target compounds on the Agilent system at the AMWTP [reference Section 2.2 of the AK Summary for Non-special Source Metal Debris Waste (BN296)].[9]

g. Chloromethane (CAS No. 74-87-3) is not a target analyte for this waste stream but will be reported because it has been added as a target compound for other waste streams at AMWTP.

h. Although the UCL_{95} level is above the PRQL for methanol, the waste is not ignitable; therefore, no HWN was applied.

Did the Data verify the Acceptable Knowledge? Yes X No_____

If no, describe the basis for assigning the EPA Hazardous Waste Code.

Statistics performed by: _____ Date: 12/28/05

Signature

Table 1B. Headspace Gas Summary Data – tentatively identified compounds. BN004-Lot 1

Tentatively Identified Compound	Maximum Observed Estimated Concentrations (ppmv)	# Samples Containing TIC	# Containers in Lot	% Detected	# Containers in Waste Stream to Date	% Detected
Ethanol [a]	53	5	18	27.8%	18	27.8%

a. The CAS No. for ethanol is 64-17-05. This is not a 40 CFR 261, Appendix VIII, listed analyte.

Did the data verify the Acceptable Knowledge? YES: X NO: _____

If no, describe the basis for assigning the EPA Hazardous Waste Code. N/A

Verification of % Detected Calculation: _____ Date: 12/28/05
Signature

Table 2. Metals Summary Data. BN004-Lot 1

ANALYTE	# Samples	# Samples above MDL [a, b]	Transformation Used [e]	Maximum (mg/kg)	Mean (mg/kg)	SD (mg/kg)	UCL_{95} (mg/kg)	Transformed PRQL	PRQL [d] (mg/kg)	EPA Code [g]
Arsenic	5	5	None	6.00	4.92	1.00	5.61	–	100	N/A
Barium	5	5	None	260	230	33.9	253	–	2000	N/A
Cadmium [b]	5	5	Natural log	-0.073	-0.463	0.265	-0.281	3.00	20	D006 [c]
Chromium [b]	5	5	Natural log	4.22	3.43	0.470	3.75	4.61	100	D007 [c]
Lead	5	5	None	36.0	17.9	12.5	26.5	–	100	D008 [c]
Mercury	5	0	None	0.005	0.005	0.000	[i]	–	4	N/A
Selenium	5	3	None	0.980	0.564	0.283	0.758	–	20	N/A
Silver [b]	5	3	Natural log	2.64	0.080	2.02	1.46	4.61	100	D011 [c]
Antimony [b]	5	5	Natural log	0.182	-0.060	0.178	0.062	4.61	100	N/A [f]
Beryllium [b]	5	4	Natural log	0.095	-1.19	1.18	-0.384	4.61	100	N/A [f]
Nickel	5	5	None	28.0	22.6	5.32	26.2	–	100	N/A [f]
Thallium	5	2	None	1.90	0.959	0.655	1.41	–	100	N/A [f]
Vanadium [b]	5	5	Natural log	4.79	4.08	0.412	4.36	4.61	100	N/A [f]
Zinc	5	5	None	130	84.8	39.7	112	–	100	N/A [f]

a. When a measurement is reported as below detection, one-half the analysis MDL is used. Note that the MDL for a given analyte may vary from sample to sample.
b. The maximum, mean, standard deviation (SD), UCL_{95}, and PRQL are presented as transformed values.
c. These HWNs, assigned by AK, are applied to the waste stream even though analytical results for the assigned compounds are not above the PRQL.
d. To determine whether a HWN should be added, the UCL_{95} is compared against the appropriate limit. For toxicity characteristic constituents that do not have a PRQL in the permit, the TC limit (mg/L) multiplied by 20 is used to calculate the RTL. RTLs correspond to the analyte PRQL for analytes that are not characteristic hazardous waste constituents.
e. The Shapiro-Wilk test for normality was applied to data prior to determination of the maximum, mean, SD, UCL_{95}, and PRQL.
f. There are no associated toxicity characteristic HWNs with these analytes.
g. Spent stripping, cleaning, and plating operations in which cyanides and chromium were used are included in this waste stream; therefore, EPA HWNs F006, F007 and F009 are applied based on AK.
h. Distribution testing is not performed on 2 or fewer applicable samples; therefore, a normal distribution is assumed.
i. All measurement are below detection; therefore, the UCL_{95} will not be calculated.

Did the data verify the Acceptable Knowledge? Yes X No

If no, describe the basis for assigning the EPA Hazardous Waste Code: N/A

Statistics performed by: Tamara Sellers Date: 12/28/05
Signature

Table 3A. Total VOC Summary Data, BN004-Lot 1

ANALYTE	# Samples	# Samples above MDL [a, f]	Trans-formation Used [c]	Maxi-mum (mg/kg)	Mean (mg/kg)	SD (mg/kg)	UCL_{90} (mg/kg)	Trans-formed PRQL	PRQL [c] (mg/kg)	EPA Code
1,1-Dichloroethylene	5	0	None	0.185	0.178	0.007	[b]	-	10	D029 [d]
Trans-1,2-dichloroethylene	5	0	None	0.095	0.088	0.004	[b]	-	10	N/A
1,1,1-Trichloroethane	5	0	None	0.095	0.088	0.004	[b]	-	10	F001/F002 [d]
1,1,2,2-Tetrachloroethane	5	0	None	0.185	0.178	0.007	[b]	-	10	N/A
1,1,2-Trichloro-1,2,2-trifluoroethane	5	0	None	0.095	0.088	0.004	[b]	-	10	F001/F002 [d]
1,1,2-Trichloroethane	5	0	None	0.095	0.088	0.004	[b]	-	10	N/A
1,2-Dichloroethane	5	0	None	0.185	0.178	0.007	[b]	-	10	N/A
Acetone	5	0	None	1.75	1.68	0.087	[b]	-	100	N/A
Benzene	5	0	None	0.185	0.178	0.007	[b]	-	10	F005 [d]
Bromoform	5	0	None	0.095	0.088	0.004	[b]	-	10	N/A
Butanol	5	0	None	1.75	1.68	0.087	[b]	-	100	N/A
Carbon disulfide	5	0	None	0.095	0.088	0.004	[b]	-	10	N/A
Carbon tetrachloride	5	0	None	0.095	0.088	0.004	[b]	-	10	F001 [d]
Chlorobenzene	5	0	None	0.095	0.088	0.004	[b]	-	10	N/A
Chloroform	5	0	None	0.095	0.088	0.004	[b]	-	10	N/A
Ethyl benzene	5	0	None	0.095	0.088	0.004	[b]	-	10	N/A
Ethyl ether	5	0	None	1.75	1.68	0.087	[b]	-	100	N/A
Isobutanol	5	0	None	1.15	1.11	0.048	[b]	-	100	N/A
Methanol	5	5	None	6700	3161	2690	5005	-	100	N/A [g]
Methyl ethyl ketone	5	0	None	1.75	1.68	0.087	[b]	-	100	F005 [d]
Methylene chloride	5	0	None	0.185	0.178	0.007	[b]	-	10	F002 [d]
Pyridine	5	0	None	1.75	1.68	0.087	[b]	-	100	N/A
o-Xylene	5	0	None	0.095	0.088	0.004	[b]	-	10	N/A
m&p-Xylene	5	0	None	0.185	0.178	0.007	[b]	-	10	N/A
Tetrachloroethylene	5	0	None	0.185	0.178	0.007	[b]	-	10	F001/F002 [d]
Toluene	5	0	None	0.095	0.088	0.004	[b]	-	10	F005 [d]
Trichloroethylene	5	0	None	0.095	0.088	0.004	[b]	-	10	F001/F002 [d]
Trichlorofluoromethane	5	0	None	0.095	0.088	0.004	[b]	-	10	N/A
Vinyl chloride	5	0	None	0.185	0.178	0.007	[b]	-	4	N/A

a. When a measurement is reported as below detection, one-half the analysis MDL is used. Note that the MDL for a given analyte may vary from sample to sample.
b. All measurement are below detection; therefore, the UCL_{90} will not be calculated.
c. To determine whether a HWN should be added, the UCL_{90} is compared against the appropriate limit. For toxicity characteristic (TC) wastes, the TC limit expressed as the RTL is used if compounds do not have a PRQL in the permit. For listed wastes, the PRQL is used.
d. These HWNs, assigned by AK, are applied to the waste stream even though analytical results for the assigned compounds are not above the PRQL.
e. The Shapiro-Wilk test for normality was applied to data prior to determination of the maximum, mean, SD, UCL_{90}, and PRQL.
f. Distribution testing is not performed on 2 or fewer applicable samples; therefore, a normal distribution is assumed.
g. Although the UCL_{90} was above the PRQL, the waste is not ignitable; therefore, HWN F003 was not applied.

Did the data verify the Acceptable Knowledge? Yes X No

If no, describe the basis for assigning the EPA Hazardous Waste Codes: N/A

Statistics performed by: Tamara E. Bolus Date: 12/28/05
Signature

Table 3B. Total VOC Summary Data – tentatively identified compounds, BN004-Lot 1.

Tentatively Identified Compound	Maximum Observed Estimated Concentrations (ppmv)	# Samples Containing TIC	# Containers in Lot	% Detected	# Containers in Waste Stream to Date	% Detected
None	N/A	N/A	N/A	N/A	N/A	N/A

Did the data verify the Acceptable Knowledge? Yes X No

If no, describe the basis for assigning the EPA Hazardous Waste Codes: N/A

Verification of % Detected Calculation N/A Date: _____

Signature

Table 4A. Total SVOC Summary Data. BN004-Lot 1.

Analyte	# Samples	# Samples Above MDL [a, c]	Trans-formation Used [d]	Maxi-mum (mg/kg)	Mean (mg/kg)	SD (mg/kg)	UCL_{95} (mg/kg)	Trans-formed PRQL	PRQL (mg/kg)	EPA code
1,2-Dichlorobenzene (o-Dichlorobenzene)	5	0	None	0.100	0.100	0.000	[b]	-	40	N/A
1,4-Dichlorobenzene (p-Dichlorobenzene)	5	0	None	0.100	0.100	0.000	[b]	-	40	N/A
2,4-Dinitrophenol	5	0	None	0.200	0.200	0.000	[b]	-	40	N/A
2,4-Dinitrotoluene	5	0	None	0.100	0.100	0.000	[b]	-	2.6	N/A
bis(2-Ethylhexyl)phthalate [e]	5	0	None	0.200	0.200	0.000	[b]	-	40	N/A
Fluoranthene [f]	5	0	None	0.100	0.100	0.000	[b]	-	40	N/A
Hexachlorobenzene	5	0	None	0.100	0.100	0.000	[b]	-	2.6	N/A
Hexachloroethane	5	0	None	0.100	0.100	0.000	[b]	-	40	N/A
2-Methylphenol (o-Cresol)	5	0	None	0.100	0.100	0.000	[b]	-	40	N/A
3- & 4-Methylphenol (m- & p-Cresol)	5	0	None	0.200	0.200	0.000	[b]	-	40	N/A
Nitrobenzene	5	0	None	0.100	0.100	0.000	[b]	-	40	N/A
Pentachlorophenol	5	0	None	0.100	0.100	0.000	[b]	-	40	N/A
Phenol [g]	5	0	None	0.355	0.151	0.114	[b]	-	40	N/A

a. When a measurement is reported as below detection, one-half the analysis MDL is used. Note that the MDL for a given analyte may vary from sample to sample.

b. All measurement are below detection; therefore, the UCL_{95} will not be calculated.

c. Distribution testing is not performed on 2 or fewer applicable samples; therefore, a normal distribution is assumed.

d. The Shapiro-Wilk test for normality was applied to data prior to determination of the maximum, mean, SD, UCL_{95}, and PRQL.

e. Bis(2-Ethylhexyl) phthalate was detected as a TIC in BNDNW216-Lot 1 in over 25% of the samples analyzed and was added to the target analyte list as required by the WAP. Bis(2-Ethylhexyl) phthalate is not a target analyte for the BN004 waste stream, but the data will be reported for this analyte. The CAS # for bis(2-Ethylhexyl) phthalate is 117-81-7.

f. Fluoranthene was detected as a TIC in BNDNW216-Lot 1 in over 25% of the samples analyzed and was added to the target analyte list as required by the WAP. Fluoranthene is not a target analyte for the BN004 waste stream, but the data will be reported for this analyte. The CAS # for fluoranthene is 206-44-0.

g. Phenol was detected as a TIC in BNDNW218-Lot 2 in over 25% of the samples analyzed and was added to the laboratory target analyte list as required by the WAP. Phenol is not a target analyte for the BN004 waste stream, but the data will be reported for this analyte. The CAS # for phenol is 108-95-2.

Did the data verify the Acceptable Knowledge? Yes X No

If no, describe the basis for assigning the EPA Hazardous Waste Code: N/A

Statistics performed by: Tamara E Sobus Date: 12/28/05
Signature

Table 4B. Total SVOC Summary Data – tentatively identified compounds. BN004-Lot 1.

Tentatively Identified Compound	Maximum Observed Estimated Concentrations (ppmv)	# Samples Containing TIC	# Containers in Lot	% Detected	# Containers in Waste Stream to Date	% Detected
None	N/A	N/A	N/A	N/A	N/A	N/A

Did the data verify the Acceptable Knowledge? Yes X No

If no, describe the basis for assigning the EPA Hazardous Waste Code: N/A

Verification of % Detected Calculation N/A Date:

Signature

Table 5. Correlation of Container Identification Numbers to Data Package. BN004-Lot 1.

Container Number	Headspace Gas Data Package	RTR Data Package	RA Data Package	Visual Examination Data Package	Solid Sampling Data Package	Solid Analysis Data Packages
10001234	HS105_00151	RTR03-00072	ASY03-00348	N/A	N/A	N/A
10001239	HS105_00151	RTR03-00072	ASY03-00347	N/A	N/A	N/A
10001240	HS105_00151	RTR03-00072	ASY03-00347	N/A	N/A	N/A
10001318	HS105_00151	RTR03-00073	ASY03-00347	N/A	N/A	N/A
10001331	HS105_00151	RTR03-00073	ASY03-00347	N/A	N/A	N/A
10001355	HS105_00151 [a]	RTR03-00043	ASY03-00353	N/A	SSC05-00321	ALD05035S ALD05041V ALD05029N ALD05042M
10001387	HS205_00322 [a]	RTR03-00041	ASY03-00264	N/A	SSC05-00321	ALD05035S ALD05041V ALD05029N ALD05042M
10016677	HS105_00151	RTR04-00221	ASY04-00480	N/A	N/A	N/A
10016686	HS105_00151	RTR04-00226	ASY04-00483	N/A	N/A	N/A
10016706	HS505_00050	RTR04-00228	ASY04-00494	N/A	N/A	N/A
10016711	HS105_00151	RTR04-00182	ASY04-00414	N/A	N/A	N/A
10016719	HS105_00151	RTR04-00184	ASY04-00414	N/A	N/A	N/A
10016722	HS105_00151	RTR04-00184	ASY04-00415	N/A	N/A	N/A
10016825	HS505_00045	RTR04-00198	ASY04-00469	N/A	N/A	N/A
10016828	HS505_00045	RTR04-00197	ASY04-00461	N/A	N/A	N/A
10016843	HS505_00050	RTR04-00200	ASY04-00463	N/A	N/A	N/A
10016860	HS505_00050	RTR04-00201	ASY04-00463	N/A	N/A	N/A
10017109	HS505_00050	RTR04-00218	ASY04-00473	N/A	N/A	N/A
10017168	HS105_00151	RTR04-00219	ASY04-00474	N/A	N/A	N/A
10017169	HS205_00322 [a]	RTR04-00219	ASY04-00474	N/A	SSC05-00321	ALD05035S ALD05041V ALD05029N ALD05042M
10017184	HS105_00151	RTR04-00214	ASY04-00480	N/A	N/A	N/A
10019885	HS205_00322 [a]	RTR04-00322	ASY04-00690	N/A	SSC05-00321	ALD05035S ALD05041V ALD05029N ALD05042M
10048273	HS105_00151 [a]	RTR05-04066	ASY05-04785	N/A	SSC05-00321	ALD05035S ALD05041V ALD05029N ALD05042M

NOTE: *For headspace gas sampling data packages, the HSG prefix represents use of the DVS system and the HS prefix represents use of the HGAS system.*

a. Headspace gas data from cored drums were not included in the statistics for headspace gas results. These containers are not included in the BN004 reconciliation Lot 1.

Table 6. RTR/VE Summary of Prohibited Items and AK Confirmation. BN004-Lot 1 [a]

Container Number	RTR Prohibited Items	Visual Examination Prohibited Items [c]	AK Confirmation [b]
10001234	None	N/A	Complete
10001239	None	N/A	Complete
10001240	None	N/A	Complete
10001318	None	N/A	Complete
10001331	None	N/A	Complete
10001355	None	N/A	Complete
10001387	None	N/A	Complete
10016677	None	N/A	Complete
10016686	None	N/A	Complete
10016706	None	N/A	Complete
10016711	None	N/A	Complete
10016719	None	N/A	Complete
10016722	None	N/A	Complete
10016825	None	N/A	Complete
10016828	None	N/A	Complete
10016843	None	N/A	Complete
10016860	None	N/A	Complete
10017109	None	N/A	Complete
10017168	None	N/A	Complete
10017169	None	N/A	Complete
10017184	None	N/A	Complete
10019885	None	N/A	Complete
10048273	None	N/A	Complete

Notes:

a. See Table 5 for the associated RTR and visual examination data packages. None of the listed containers contains prohibited items as defined by Section B-1c of the Advanced Mixed Waste Treatment Project Quality Assurance Project Plan (QAPjP), MP-TRUW-8.2. The absence of prohibited items is determined and documented through acceptable knowledge and confirmation activities. Radiography or visual examination is performed on each container in this waste stream as a confirmation activity.

b. Acceptable Knowledge confirmations for RTR and visual examinations are conducted by an Acceptable Knowledge Expert on every drum by completing a checklist for each RTR and visual batch. This checklist can be accessed through the batches listed in Table 5.

c. None of these drums have a VE in lieu of RTR examination. N/A indicates that containers have been selected for visual examination by AMWTP.

Table 7. Sample Identification Number Cross Correlation Table. BN004-Lot 1

Container Number	Headspace Gas Sample Number	Solid Sample Number(s)
10001234	HS105_00151B-12	N/A
10001239	HS105_00151B-16	N/A
10001240	HS105_00151B-15	N/A
10001318	HS105_00151B-21	N/A
10001331	HS105_00151B-10	N/A
10001355	HS105_00151B-14 [a]	10066793, 10066794, 10066797
10001387	HS205_00322B-04 [a]	10066183, 10066184, 10066187
10016677	HS105_00151B-03	N/A
10016686	HS105_00151B-05	N/A
10016706	HS505_00050C-16	N/A
10016711	HS105_00151B-18	N/A
10016719	HS105_00151B-06	N/A
10016722	HS105_00151B-07	N/A
10016825	HS505_00045B-20	N/A
10016828	HS505_00045B-21	N/A
10016843	HS505_00050C-10	N/A
10016860	HS505_00050C-18	N/A
10017109	HS505_00050C-11	N/A
10017168	HS105_00151B-08	N/A
10017169	HS205_00322B-03 [a]	10066273, 10066274, 10066277
10017184	HS105_00151B-20	N/A
10019885	HS205_00322B-01 [a]	10066424, 10066425, 10066428
10048273	HS105_00151B-13 [a]	10066701, 10066702, 10066705

a. Headspace gas data from cored drums were not included in the statistics for headspace gas results. These containers are not included in the BN004 reconciliation Lot 1.

Attachment A
Evaluation of Required Number of Samples BN004-Lot 1

ANALYTE	Number of Samples	Number of Samples above MDL [a, b]	Trans-formation Used	Maxi-mum (mg/kg)	Mean (mg/kg)	Standard Deviation (mg/kg)	Upper 90% confidence limit (mg/kg)	Trans-formed PRQL	PRQL [b] (mg/kg)	Required number of samples [c,e,g]	Comments
Arsenic	5	5	None	6.00	4.92	1.00	5.61	-	100	5	Code not required to be applied [i]
Barium	5	5	None	260	230	33.9	253	-	2000	5	Code not required to be applied [i]
Cadmium [f]	5	5	Natural log	-0.073	-0.463	0.265	-0.281	3.00	20	5	Code D006 applied per AK
Chromium [f]	5	5	Natural log	4.22	3.43	0.470	3.75	4.61	100	5	Code D007 applied per AK
Lead	5	5	None	36.0	17.9	12.5	26.5	-	100	5	Code D008 applied per AK
Mercury	5	0	None	0.005	0.005	0.000	-	-	4	-	No samples above MDL
Selenium	5	3	None	0.980	0.564	0.283	0.758	-	20	5	Code not required to be applied [i]
Silver [f]	5	3	Natural log	2.64	0.080	2.02	1.46	4.61	100	5	Code D011 applied per AK
Antimony [f]	5	5	Natural log	0.182	-0.060	0.178	0.062	4.61	100	5	No associated hazardous waste code [d]
Beryllium [f]	5	4	Natural log	0.095	-1.19	1.18	-0.384	4.61	100	5	Code not required to be applied [i]
Nickel	5	5	None	28.0	22.6	5.32	26.2	-	100	5	No associated hazardous waste code [d]
Thallium	5	2	None	1.90	0.959	0.655	1.41	-	100	5	No associated hazardous waste code [d]
Vanadium [f]	5	5	Natural log	4.79	4.08	0.412	4.36	4.61	100	5	No associated hazardous waste code [d]
Zinc	5	5	None	130	84.8	39.7	112	-	100	17	No associated hazardous waste code [d]
1,1-Dichloroethene (1,1-Dichloroethylene)	5	0	None	0.185	0.178	0.007	-	-	10	-	Code D029 applied per AK
trans-1,2-Dichloroethene (trans-1,2-Dichloroethylene)	5	0	None	0.095	0.088	0.004	-	-	10	-	No samples above MDL
1,1,1-Trichloroethane	5	0	None	0.095	0.088	0.004	-	-	10	-	Codes F001/F002 applied per AK
1,1,2,2-Tetrachloroethane	5	0	None	0.185	0.178	0.007	-	-	10	-	No samples above MDL
1,1,2-Trichloro-1,2,2-trifluoroethane	5	0	None	0.095	0.088	0.004	-	-	10	-	Code F001/F002 applied per AK

ANALYTE	Number of Samples	Number of Samples above MDL [a, b]	Trans-formation Used	Maxi-mum (mg/kg)	Mean (mg/kg)	Standard Deviation (mg/kg)	Upper 90% confidence limit (mg/kg)	Trans-formed PRQL	PRQL [b] (mg/kg)	Required number of samples [c,e,g]	Comments
1,1,2-Trichloroethane	5	0	None	0.095	0.088	0.004	-	-	10	-	No samples above MDL
1,2-Dichloroethane	5	0	None	0.185	0.178	0.007	-	-	10	-	No samples above MDL
Acetone	5	0	None	1.75	1.68	0.087	-	-	100	-	No samples above MDL
Benzene	5	0	None	0.185	0.178	0.007	-	-	10	-	Code F005 applied per AK
Bromoform	5	0	None	0.095	0.088	0.004	-	-	10	-	No samples above MDL
Butanol	5	0	None	1.75	1.68	0.087	-	-	100	-	No samples above MDL
Carbon disulfide	5	0	None	0.095	0.088	0.004	-	-	10	-	No samples above MDL
Carbon tetrachloride	5	0	None	0.095	0.088	0.004	-	-	10	-	Code F001 applied per AK
Chlorobenzene	5	0	None	0.095	0.088	0.004	-	-	10	-	No samples above MDL
Chloroform	5	0	None	0.095	0.088	0.004	-	-	10	-	No samples above MDL
Ethyl benzene	5	0	None	0.095	0.088	0.004	-	-	10	-	No samples above MDL
Ethyl ether	5	0	None	1.75	1.68	0.087	-	-	100	-	No samples above MDL
Isobutanol	5	0	None	1.15	1.11	0.048	-	-	100	-	No samples above MDL
Methanol	5	5	None	6700	3161	2690	5005	-	100	5	Code not required to be applied [j]
Methyl ethyl ketone	5	0	None	1.75	1.68	0.087	-	-	100	-	Code F005 applied per AK
Methylene chloride	5	0	None	0.185	0.178	0.007	-	-	10	-	Code F002 applied per AK
Pyridine	5	0	None	1.75	1.68	0.087	-	-	100	-	No samples above MDL
o-Xylene	5	0	None	0.095	0.088	0.004	-	-	10	-	No samples above MDL
m&p-Xylene	5	0	None	0.185	0.178	0.007	-	-	10	-	No samples above MDL
Tetrachloroethene (Tetrachloroethylene)	5	0	None	0.185	0.178	0.007	-	-	10	-	Codes F001/F002 applied per AK
Toluene	5	0	None	0.095	0.088	0.004	-	-	10	-	Code F005 applied per AK
Trichloroethene (Trichloroethylene)	5	0	None	0.095	0.088	0.004	-	-	10	-	Codes F001/F002 applied per AK
Trichlorofluoromethane	5	0	None	0.095	0.088	0.004	-	-	10	-	No samples above MDL

ANALYTE	Number of Samples	Number of Samples above MDL [a, b]	Trans-formation Used	Maxi-mum (mg/kg)	Mean (mg/kg)	Standard Deviation (mg/kg)	Upper 90% confidence limit (mg/kg)	Trans-formed PRQL	PRQL [b] (mg/kg)	Required number of samples [c,e,g]	Comments
Vinyl chloride	5	0	None	0.185	0.178	0.007	-	-	4	-	No samples above MDL
1,2-Dichlorobenzene (o-Dichlorobenzene)	5	0	None	0.100	0.100	0.000	-	-	40	-	No samples above MDL
1,4-Dichlorobenzene (p-Dichlorobenzene)	5	0	None	0.100	0.100	0.000	-	-	40	-	No samples above MDL
2,4-Dinitrophenol	5	0	None	0.200	0.200	0.000	-	-	40	-	No samples above MDL
2,4-Dinitrotoluene	5	0	None	0.100	0.100	0.000	-	-	2.6	-	No samples above MDL
bis(2-Ethylhexyl) phthalate	5	0	None	0.200	0.200	0.000	-	-	40	-	No samples above MDL
Fluoranthene	5	0	None	0.100	0.100	0.000	-	-	40	-	No samples above MDL
Hexachlorobenzene	5	0	None	0.100	0.100	0.000	-	-	2.6	-	No samples above MDL
Hexachloroethane	5	0	None	0.100	0.100	0.000	-	-	40	-	No samples above MDL
2-Methylphenol (o-Cresol)	5	0	None	0.100	0.100	0.000	-	-	40	-	No samples above MDL
3- & 4-Methylphenol (m- & p-Cresol)	5	0	None	0.20	0.200	0.00	-	-	40	-	No samples above MDL
Nitrobenzene	5	0	None	0.100	0.100	0.000	-	-	40	-	No samples above MDL
Pentachlorophenol	5	0	None	0.100	0.100	0.000	-	-	40	-	No samples above MDL
Phenol	5	0	None	0.355	0.151	0.114	-	-	40	-	No samples above MDL

a. The mean and standard deviation presented are the mean and standard deviation of the method detection limits (after dividing by 2). If all measurements are below detection, the UCL_{95} will not be calculated.

b. For analytes that have both an RTL and a PRQL, the PRQL is used to calculate the required number of samples.

c. The required number "n" of samples pertains only to toxicity characteristic or listed waste analytes and only to those analytes where the associated EPA HWN is not assigned (i.e., it only applies to those cases where a site intends to establish that the constituent is below the regulatory threshold and the associated EPA HWN does not apply).

d. If there is no hazardous waste code associated with an analyte, then that analyte will not be used to define the number of required samples.

e. If there are no samples above the MDL for a given analyte, then that analyte will not be used to define the number of required samples.

f. If a transformation is applied to the distribution to improve normality prior to calculating the mean and variance, then this same transformation is applied to the PRQL / RTL for that analyte.

g. If the calculated sample size is less than 5, then the number of required samples is set to the program-defined minimum of 5.

h. Distribution testing is not performed on 2 or fewer applicable samples; therefore, a normal distribution is assumed.

i. The HWN for characteristic or listed hazardous waste is not assigned based on AK, and the UCL_{95} is below the RTL or PRQL.

j. Although the UCL_{95} is above the PRQL for methanol, the waste is not ignitable; therefore, HWN F003 was not applied.

Acceptable Knowledge Summary for Special Setups Waste (BN004)

Advanced Mixed Waste Treatment Project

(Signature on file. See DCR-11340.)

Susan Peterman
TRU Programs Manager

06/27/12
Date

CONTENTS

ACRONYMS AND ABBREVIATIONS iv

1.0 WASTE STREAM DESCRIPTION 1

1.1 Waste Stream Number 1

1.2 Basic Waste Stream Information 1

1.3 Waste Stream Description 3

1.4 Process Description 4

1.5 Prohibited Items 7

1.6 Resource Conservation and Recovery Act Determination 8

1.7 Radionuclides 12

2.0 SHIPPING CONSIDERATIONS 12

2.1 Waste Packaging 12

2.2 Flammability Consideration 13

3.0 REFERENCES 14

TABLES

Table 1-1. Physical waste form description for special setups waste. 3

Table 1-2. Wastes treated in the solidification process 5

Table 1-3. Estimated waste material parameter weights per unit of waste for Special Setups Waste (BN004). 7

ACRONYMS AND ABBREVIATIONS

AK	acceptable knowledge
AMWTP	Advanced Mixed Waste Treatment Project
ATWIR	Annual Transuranic Waste Inventory Report
CCP	Central Characterization Project
CFR	Code of Federal Regulations
CH-TRAMPAC	Contact Handled Transuranic Waste Authorized Methods for Payload Control
CH-TRUCON	CH-TRU Waste Content Codes
DOE	Department of Energy
ECM	Electrochemical Milling
EDL	economic discard limit
EDMS	Electronic Document Management System
EDTA	Ethylenediaminetetraacetic acid
EPA	Environmental Protection Agency
HF	hydrofluoric acid
HSG	headspace gas
HWN	hazardous waste number
IDC	item description code
INEEL	Idaho National Engineering and Environmental Laboratory (now INL)
INEL	Idaho National Engineering Laboratory (now INL)
INL	Idaho National Laboratory
nCi/g	nanocuries per gram
NDA	non-destructive assay
PCB	polychlorinated biphenyl
ppm	parts per million
PRQL	program required quantitation limit
RF	Rocky Flats
RFETS	Rocky Flats Environmental Technology Site
RTR	real-time radiography
SDA	Subsurface Disposal Area
TSA-RE	Transuranic Storage Area-Retrieval Enclosure
TWBIR	Transuranic Waste Baseline Inventory Report
UCL_{90}	90% upper confidence limit
VE	Visual Examination
VOCs	Volatile Organic Compounds

WAC	Waste Acceptance Criteria
WAP	Waste Analysis Plan (Attachment B of the WIPP Hazardous Waste Permit)
WIPP	Waste Isolation Pilot Plant
WMP	Waste material parameter
WMC	Waste Matrix Code
WTS	Waste Tracking System

Advanced Mixed Waste Treatment Project

Acceptable Knowledge Summary for Special Setups Waste (BN004)

1.0 WASTE STREAM DESCRIPTION

1.1 Waste Stream Number

BN004[1]

1.2 Basic Waste Stream Information

1.2.1 Waste Stream Name

Special Setups Waste[1]

1.2.2 Point of Generation

Rocky Flats (RF) Plant, Building 774[2]

1.2.3 Waste Stream Volume

2,302 55-gallon containers (480 m^3) – current volume[3]

The estimated percentages of transuranic (TRU) activity for special setups waste are 70% greater than 100 nanocuries per gram (nCi/g) and 30% less than 100 nCi/g.

Advanced Mixed Waste Treatment Project (AMWTP) will employ payload management practices in accordance with the Waste Acceptance Criteria (WAC) for waste stream BN004.[7]

1.2.4 Generation Dates

AMWTP stored containers of RF special setups waste generated from 1968 to 1988.[66] Waste stored at AMWTP with generation dates (i.e., pack date) later than 1988 are the result of repackaging (e.g., waste characterization activities).

1.2.5 TRUCON Codes

ID111/ID211[1, 4]

1.2.6 Waste Isolation Pilot Plant (WIPP) Waste Stream ID

Annual Transuranic Waste Inventory Report (ATWIR) Waste Stream ID: IN-BN004 (formerly identified as WIPP Identification Number Transuranic Waste Baseline Inventory Report [TWBIR] Waste Stream ID: IN-W157.144)[5, 67]

1.2.7 Summary Category Group

S3000 Homogenous Solids[1, 6]

1.2.8 Waste Matrix Code Group

Solidified Inorganics

1.2.9 Waste Matrix Codes

S3150 –Solidified Homogeneous Solids

Special setups waste consists of >50% by volume solidified waste form. Specifically, small quantities of liquids were solidified in large quantities of cement as special setups waste. Small quantities of absorbents (Oil-Dri® or vermiculite) were also added. This waste is at least 50% (by volume) inorganic solids and is classified as a homogeneous waste.[36]

1.2.10 Descriptions from the TWBIR and ATWIR

TWBIR waste stream description:

This waste, generated at RF, consists of liquids absorbed on a cement mixture. The liquid wastes were not compatible with aqueous treatment processes and are handled separately due to their plutonium complexing nature.[5]

ATWIR waste stream description:

IN-BN004 (Special Setups) waste was generated from a waste treatment process (predominately laboratory waste) generated in support of plutonium operations at the Rocky Flats Environmental Technology Site (RFETS). Resins and electrochemical milling (ECM) sludges were also solidified with the liquid waste. This waste stream is comprised of solidified waste assigned item description code (IDC) ID-RF-004 and ID-RF-802. Special setups consists of waste >50% by volume inorganic solidified waste. Specifically, small quantities of liquids solidified in large quantities of cement.[a] [67]

1.2.11 Defense Determination

The special setups wastes (BN004) generated at RF and shipped to the Idaho National Laboratory (INL) were generated exclusively through defense program activities. Liquid wastes that were subsequently solidified as special setups waste addressed by this summary were generated from defense related activities (e.g., weapons production and plutonium recovery activities) or from one of the four activities identified in the 1997 Department of Energy (DOE) Carlsbad Area Office (CAO) memorandum[10] as non-defense waste that was inadvertently mixed in the past and from which the non-defense portion cannot be segregated.

---

a. The description in the ATWIR will be revised in the next annual update to add IDC RF 744 and revise the waste stream description to "IN-BN004 (Special Setups) waste was generated from treating wastes (predominately laboratory waste) generated in support of plutonium operations at Rocky Flats. Resins and electrochemical milling sludges were also solidified with the liquid waste. This waste stream is comprised of solidified waste assigned IDC ID-RF-004, ID-RF-744 and ID-RF-802."

In accordance with interim guidance, defense wastes are identified as those wastes generated during work involving only defense activities or during work in which defense and non-defense wastes were inadvertently mixed in the past and from which the non defense portion cannot be segregated. The TRU wastes shipped to the INL covered by the BN004 waste stream profile (WSP) meet this definition.[60]

1.3 Waste Stream Description

1.3.1 Description

Special setups waste was generated from a waste treatment process that solidified process waste (predominantly laboratory liquid waste) generated in support of plutonium operations at RF. Resins and ECM sludges were also solidified with the liquid waste. This waste stream is comprised of solidified waste assigned IDCs RF 004, RF 744, and RF 802. The waste was generated in Building 774. The Special Setups waste is similar in material, physical form, and hazardous constituents and is a single waste stream. The TWBIR number, IDC, waste matrix code (WMC), and waste descriptions for the special setups waste stream are presented in Table 1-1.

Table 1-1. Physical waste form description for special setups waste.

IDC	WMC	Description
RF 004	S3150	Special Setups Waste
RF 744	S3150	Pits 11 and 12 Special Setups
RF 802	S3150	Solidified Laboratory Waste

Special Setups Waste – Building 774 (RF 004). This waste consists of liquids primarily from laboratory operations throughout the plant site that were neutralized, if required, and solidified in Building 774. A mixture of Portland cement and insulation cement (magnesia cement) was placed in a lined 55-gallon drum and identified with container prefix 744. The liquid was neutralized, if required, and then added to the cement mixture. Some drums may contain polyethylene bottles (<4 liters) of solidified waste.[19, 21]

Pits 11 and 12 Special Setups (RF 744). RF 744 was assigned by AMWTP to special setups containers retrieved from Subsurface Disposal Area (SDA) Pits 11 and 12 and identified with container prefix 744. The process and inputs were the same as waste containers identified as RF 004. The retrieved waste containers were originally generated prior to 1972, shipped to INL and buried in Pits 11 and 12. The waste containers were subsequently retrieved from the pits prior to 1979 and placed in the Transuranic Storage Area-Retrieval Enclosure (TSA-RE).[3]

Solidified Laboratory Waste – Building 774 (RF 802). RF 802 replaced RF 004 in approximately 1986.[43] RF changed the IDC, but the process and inputs remained the same.[11]

1.4 Process Description

1.4.1 Areas of Operation

The waste was generated in Building 774 by solidifying waste generated from various locations at RF.[13, 16, 23, 24, 40]

1.4.2 Process Flow Diagrams

The process flow diagram for the solidification of liquid waste as special setups waste is provided in the archived RF information, Waste Stream Residue Identification and Characterization (WSRIC) Building 774.[30]

1.4.3 Waste Generating Processes

The special setups waste treatment process solidified process waste (predominantly laboratory liquid waste that was not compatible with the primary aqueous waste treatment system). The liquids include complexing agents (e.g., Versene [ethylene diaminetetraacetic acid], tetraphosphoric acid, tributyl phosphate, citrate, oxalic acid, sodium lignosulfonate, and americium oxalate), strong acids, and strong bases. The special setups waste treatment process also solidified solids such as ECM sludges or resins. These wastes were generated primarily from the analytical laboratories, research and development laboratories, and maintenance shops located in Buildings 122, 123, 126, 371, 444, 559, 705, 707, 750, 771, 777, 779, 865, 881, 883, 886, and 991.[2, 4, 12, 14, 16, 21, 30, 31, 34, 39, 42, 44]

If the liquids generated in the analytical laboratories in Buildings 371, 559, and 771 contained plutonium above the economic discard limit (EDL), the liquids were sent to Building 771 for recovery prior to the transfer of the liquid waste to Building 774 for solidification.[27]

The bulk of the waste was packaged in small containers (typically plastic bottles) or in drums at the point of origin and transferred to Building 774; however, some of the liquid waste was received by pipeline transfers from Building 771. A setup logbook was used in Building 774 to record the types of waste and generation source. The date of treatment, generation location, waste description, and treatment process were entered in the logbook.[39, 48] The bulk of the liquid waste treated in the special setups process was laboratory waste, acids, and bases; however, other liquids (e.g., coolants, oils) were also solidified in Building 774. Therefore, individual containers in this waste stream may have limited amounts of organics (less than 10 liters). Containers of 50% or greater solidified organic waste are not included in this waste stream.

1.4.3.1 Neutralization and Solidification

In Building 774, the packaged waste received in plastic bottles was placed into a glovebox. Any acid waste was transferred from the glovebox into Tank T-7 located adjacent to the glovebox and neutralized with sodium hydroxide. After sodium hydroxide was added to

Tank T-7, pH paper was used to ensure the acid waste had been neutralized. Basic liquid wastes were not neutralized prior to solidification.[28, 48]

A mixture of approximately 250–300 pounds of Portland Type I/II cement and 100-150 pounds of insulation cement (magnesia cement) was placed in a lined 55-gallon drum, and the drum was placed on a drum roller to ensure mixing of the contents. The drum was then attached to the glovebox.[29, 48] Approximately 80–100 liters of the basic or neutralized liquid waste was added to the cement mixture.[21, 29, 48] The cement mixture in the drum chemically reacted with the waste solution to form a solid monolith.[28, 48] Periodically, polyethylene bottles (<4 liters) were filled with the cement mixture, sent to the small quantity waste generators on the plant site for addition of the liquid waste, and returned to Building 774 where they were packaged into drums.[21]

1.4.4 Material Inputs

Material inputs for special setups waste are presented in Table 1-2 (based on the type of waste) and include liquid wastes from laboratories, production, maintenance, and research and development activities. The special setups waste treatment process was used to solidify liquid wastes containing complexing agents that made the liquid incompatible or would interfere with the primary aqueous liquid waste treatment processes.

Table 1-2. Wastes treated in the solidification process.

Type of Waste	Compound
Laboratory Wastes	Aqueous wastes generated from sampling various waste streams including those that contain listed solvents (acetone, benzene, carbon tetrachloride, methanol, methylene chloride, methyl ethyl ketone, tetrachloroethylene, 1,1,1-trichloroethane, 1,1,2-trichloro-1,2,2-trifluoroethane, trichloroethylene, toluene, and xylene), toxicity characteristic metals (cadmium, chromium, lead, and silver), and electroplating wastes (cyanide bath rinse solutions that contained cadmium, chromium, nickel, and silver). Spent laboratory standards, including the above constituents and 1,1-dichloroethylene.
Acids/bases	Boric, chromic, hydrochloric, hydrofluoric, nitric, perchloric, phosphoric, tetraphosphoric, sodium hydroxide, sulfamic, sulfuric, oxalic, and tartaric.[2]

Type of Waste	Compound
Commercial products	Ox-out (a water solution of nitric acid and ammonium bifluoride);[33, 45] Versene (a trade name ethylenediaminetetraacetic acid [EDTA] product),[21, 54] Kepro developer (contains 1,1,1-trichloroethane),[33, 55] Metex solution (a trade name for a series of inorganic and organic acids or salts)[35] and Turco solutions (a trade name for a series of cleaners with various combinations of acids, complexing agents, and surfactants).[33, 53]
Complexing agents	Sodium lignosulfonate, tributyl phosphate, tetraphosphoric acid, citrate, oxalic acid, americium oxalate, and EDTA
ECM electrolyte	A mixture of chromic, sulfuric, and phosphoric acids[56]
Radionuclides	^{133}Ba, ^{55}Fe ^{237}Np, ^{239}Pu, ^{90}Sr, and tritium (sources)
Resins	Spent anion and cation resins
Other chemicals	Dicesium hexachloroplutonate, cyanide, acrylonitrile (vinyl cyanide), thiocyanate, and sodium sulfide solutions

1.4.5 Waste Material Parameters

To estimate the waste material parameter (WMP) weight percentages for BN004, WMP data from 100% of the completed real-time radiography (RTR) and visual examination (VE) of special setups waste drums were obtained from the AMWTP Waste Tracking System (WTS) database on October 11, 2006. This represents 49% of the estimated number of drums for this waste stream. The special setups waste was generated at RF from 1971 through 1988. Drums evaluated to estimate the WMP weights per unit of waste were generated from 1972 through 1988. Approximately 3% of the waste was generated prior to 1972. AK indicates that the waste generated in 1971 is similar to the wastes that have undergone RTR and VE. Therefore, the WTS data is representative of the waste stream. WTS is AMWTPs comprehensive, DOE-audited waste tracking database in which all waste containers are tracked cradle-to-grave and all related characterization data are stored. A statistical analysis of the RTR and VE data was performed to estimate WMP weights (by percent) for special setups waste, excluding packaging, in accordance with the requirements of MP-TRUW-8.13, Collection, Review, and Management of Acceptable Knowledge Documentation, and are summarized in Table 1-3.[50, 57–59]

Table 1-3. Estimated waste material parameter weights per unit of waste for Special Setups Waste (BN004).

Potential Waste Material Parameters	Unit Weight by Percent
Iron-based Metals/Alloys	<1
Aluminum-based Metals/Alloys	<1
Inorganic matrix	99
Other Inorganic Materials	<1
Cellulosics	<1
Plastics (waste materials)	<1
Rubber	<1

Although individual drums in this waste stream may contain other homogenous solid waste and debris materials, the waste stream as a whole will be greater than 50%, by volume, inorganic solidified homogeneous solids.[2, 50]

1.5 Prohibited Items

The following items are prohibited at the WIPP in accordance with Section B-1c of MP-TRUW-8.2, Quality Assurance Project Plan, and Section 3 of MP-TRUW-8.1, Certification Plan for INL Transuranic Waste.[9, 63]

- Liquid waste and prohibited observable liquids
- Non-radionuclide pyrophoric materials
- Hazardous wastes not occurring as co-contaminants with TRU mixed wastes
- Wastes incompatible with backfill, seal and panel closure materials, container and packaging materials, shipping container materials, or other wastes
- Wastes containing explosives or compressed gases
- Wastes with polychlorinated biphenyls (PCBs) not authorized under an U.S. Environmental Protection Agency (EPA) PCB waste disposal authorization
- Wastes exhibiting the characteristic of ignitability, corrosivity, or reactivity (hazardous waste numbers [HWNs] D001, D002, or D003)
- Waste that has ever been managed as high-level waste and waste from tanks specified in Table B-8 of MP-TRUW-8.2 unless specifically approved through a Class 3 permit modification.[63]

- Any waste container from a waste stream (or waste stream lot) that has not undergone either radiographic or VE of a statistically representative subpopulation of the waste stream in each shipment, as describe in Attachment B7 of MP-TRUW-8.2.[63]

- Sealed containers greater than four liters.

The absence of prohibited items is determined and documented through acceptable knowledge (AK) and characterization activities. Real-time radiography or VE is performed on each container in this waste stream to verify the absence of prohibited items.[51, 52] Containers that are identified as containing prohibited items during RTR or VE are treated or rejected, as appropriate. Drums containing prohibited items will not be shipped to WIPP. Non-hazardous solidification agents Aquaset®, Aquaset II-G®, and Micro Cel® E may be added to the waste by AMWTP to treat liquid in excess of WIPP WAC limits.[64, 65]

1.6 Resource Conservation and Recovery Act Determination

1.6.1 EPA Hazardous Waste Numbers

Special setups waste is characterized as mixed-TRU waste. Toxicity characteristic HWNs applied to the waste are D006, D007, D008, D011, and D029. Listed HWNs applied to this waste stream are F001, F002, F005, F006, F007, and F009.

1.6.2 Hazardous Determination

The hazardous waste determination for special setups waste is described in the following subsections.

1.6.2.1 Characteristic Waste

1.6.2.1.1 Ignitability

The materials in this waste stream do not meet the 40 Code of Federal Regulations (CFR) 261.21 definition of ignitability. The materials in this waste stream are not liquid waste. Furthermore, non hazardous absorbents (i.e., cement, vermiculite, and Oil-Dri®) were added during packaging for purposes of absorbing liquids. Containers identified with liquid in excess of WIPP WAC limits may be treated using non-hazardous solidification agents (e.g., Aquaset®, Aquaset II-G®, or Micro Cel® E) to render the waste acceptable prior to shipment.[64, 65] The materials are not liquid and are not capable of causing fire through friction, absorption of moisture, or spontaneous chemical change. These materials are not compressed gases, and the containers do not contain compressed gases. These materials are not Department of Transportation (DOT) oxidizers as defined in 49 CFR 173. Feed solutions contained small amounts of oxidizers such as oxalic acid or nitric acid; however, the waste solutions were neutralized and solidified, and the final form does not meet the definition of an oxidizer.[16–21] Therefore, this waste stream does not exhibit the characteristic of ignitability (D001).

1.6.2.1.2 Corrosivity

The materials in this waste do not meet the definition of corrosivity as defined in 40 CFR 261.22. This waste is not a liquid. Furthermore, absorbents (i.e., cement, vermiculite, and Oil-Dri®) were added during packaging for purposes of absorbing liquids.[7, 18–21] Containers identified with liquid in excess of WIPP WAC limits may be treated using non-hazardous solidification agents to render the waste acceptable prior to shipment (e.g., Aquaset®, Aquaset II-G®, or Micro-Cel® E).[64, 65] Therefore, the corrosive characteristic (D002) does not apply to this waste stream.

1.6.2.1.3 Reactivity

The materials in this waste stream do not meet the 40 CFR 261.23 definition of reactivity. The materials are stable and will not undergo violent chemical change. The materials will not react violently with water, form potentially explosive mixtures with water, or generate toxic gases, vapors, or fumes when mixed with water. The materials are not capable of detonation or explosive reaction. The materials are neither forbidden explosives nor Division 1.1, 1.2, or 1.3 (Class A or B) explosives as defined in 49 CFR 173, nor do the drums contain explosive materials.[16–21] On five occasions, small volumes of cyanide, acrylonitrile (vinyl cyanide), thiocyanate, and sodium sulfide solution were included in the liquid waste prior to solidification and are included in this waste stream.[39] However, if exposed to pH conditions between 2 and 12.5, they will not generate toxic gases, vapors, or fumes in a quantity sufficient to present a danger to human health or the environment because the chemicals have been stabilized in a solidified monolith. Containers identified with compressed gases or aerosol cans will have the prohibited items treated/removed prior to shipment. Containers with liquid in excess of WIPP WAC limits may be treated with non-hazardous solidification agents to render the waste acceptable prior to shipment (e.g., Aquaset®, Aquaset II-G®, or Micro-Cel® E).[64, 65] The materials in this waste stream are, therefore, not reactive wastes (D003).

1.6.2.1.4 Toxicity

The toxicity characteristic contaminants fall into one of two categories: metals and organics. Organic compounds include halogenated and non-halogenated solvents, pesticides, herbicides, and other toxic organic compounds.

AK documentation indicated the presence of toxicity characteristic metals cadmium (D006), chromium (D007), lead (D008), and silver (D011) because these constituents are present in the liquid wastes from the analytical laboratories and research and development operations.[1, 2, 41] Even though these contaminants were not detected in solid sampling and analysis at concentrations above their associated program required quantitation limit (PRQL) values, the waste stream is conservatively assigned EPA HWNs D006, D007, D008, and D011.

1,1 Dichloroethylene (D029) was detected in the headspace gas (HSG) sampling results. No use for 1,1-dichloroethylene was identified within the RF AK (except as a laboratory calibration standard); however, this constituent was detected in HSG sampling and analysis conducted previously at INL. Even though the calculated 90% upper confidence limit (UCL_{90})

value is below the PRQL value, EPA HWN D029 is conservatively assigned to the special setups waste.

The special setups waste includes analytical waste generated from the sampling of waste streams containing listed solvents including benzene, carbon tetrachloride, tetrachloroethylene, and trichloroethylene that were used as solvents in many operations on the plant site.[32] Because special setups wastes are characterized as listed hazardous wastes, the toxicity EPA HWNs for these constituents are not applied to this waste stream.

1.6.2.2 Listed Waste

1.6.2.2.1 F-Listed Hazardous Waste Numbers

The materials in this waste stream are listed hazardous wastes because they were mixed with or derived from waste listed in 40 CFR 261, Subpart D as hazardous waste from non-specific sources (40 CFR 261.31).

EPA HWN F001, F002, and F005 are assigned to the special setups waste for spent solvents including carbon tetrachloride (F001); tetrachloroethylene, 1,1,1-trichloroethane, 1,1,2-trichloro-1,2,2-trifluoroethane, trichloroethylene (F001, F002); methylene chloride (F002); and benzene, methyl ethyl ketone, and toluene (F005). EPA HWNs F006, F007 and F009 listed HWNs are assigned to the special setups waste because it may be contaminated with spent electroplating wastes. The special setups waste includes analytical waste generated from sampling and analyzing listed waste.

Carbon tetrachloride, tetrachloroethylene, trichloroethylene, 1,1,1-trichloroethane, and 1,1,2-trichloro-1,2,2-trifluoroethane were identified in AK documents as solvents commonly used in cleaning, degreasing, production, laboratory, and maintenance operations. Benzene, methylene chloride, and toluene were used as solvents in laboratory operations. In addition, 1,1,1-trichloroethane, trichloroethylene, and paint thinner (methyl ethyl ketone and toluene) were used for cleaning, and methylene chloride was used for paint removal.[2] Waste streams with these listed constituents were sampled and analyzed by the RF laboratories, and the waste generated from the laboratories is included in this waste stream. In addition, small amounts (4–8 liters) of organic solvents may have been added to the waste on occasion. Spent solvent wastes included electropolishing solution (containing 2-ethoxyethanol from metallography laboratories) and scintillation cocktail (containing toluene from tritium analysis).[39] Therefore, EPA HWNs F001, F002, and F005 are assigned to this waste stream.

Acetone, methanol, and xylene (non-chlorinated solvents) were also used as solvents in laboratory and production operations. Waste streams with these listed constituents were sampled and analyzed by the RF laboratories, and the waste generated from the laboratories is included in this waste stream. Methanol was detected in the HSG and solid samples at levels above the PRQL, but special setups waste is not a liquid waste. If a waste no longer exhibits the characteristic of ignitability, the F003 HWN can be removed [40 CFR 261.3(9)(1)]. Because the waste is not ignitable, the EPA HWN F003 is not assigned to this waste stream.

EPA HWNs F006, F007, and F009 are assigned because laboratories could have sampled and analyzed treated aqueous wastes from Buildings 374 and 774 treatment facilities. The treated aqueous waste from Buildings 374 and 774 include aqueous waste from electroplating operations (e.g., cyanide bath rinse solutions that contained cadmium, chromium, nickel, and silver) and the waste generated from the laboratories is included in this BN004 waste stream.[23, 27]

AK indicates that 1,1,1-trichloroethane, carbon tetrachloride, trichloroethylene, ethyl benzene, methanol, and xylene were detected above the PRQL based on HSG and solid sampling conducted previously at INL.[22] Confirmatory solid and HSG sampling and analysis did confirm the presence of listed solvent constituents; however, the concentrations are below the associated PRQLs (except for methanol). No additional EPA HWNs are required; therefore, EPA HWNs F001, F002, F005, F006, F007, and F009 are assigned to this waste stream.

1.6.2.2.2 P-, U-, and K-Listed Hazardous Waste Numbers

Although hydrofluoric acid (HF) was identified as a chemical used (for its intended purpose) during plutonium processing at RF, only spent HF sources could have been sent to special setups process. Based on this information, the U134 HWN does not apply to this waste stream.

Based on a review of AK, it was determined that the special setups waste will contain less than one percent beryllium by weight. If beryllium is present, it is a contaminant of the process and not an unused commercial chemical product, an off-specification species, a container residue, or a spill residue thereof. Therefore, the P-listed waste code for beryllium, as defined in 40 CFR 261.33, is not assigned to the waste.

The materials in this waste stream are not discarded commercial chemical products, off specification species, container residues, or spills thereof (40 CFR 261.33). The materials in this waste stream are not P- or U-listed hazardous waste.

The materials in this waste are not hazardous waste from specific sources since they were not generated from any processes listed in 40 CFR 261.32. The materials in this waste stream are, therefore, not K-listed hazardous waste.

1.6.2.3 Toxic Substances Control Act Regulated Contaminants

Polychlorinated biphenyls are not expected to be present in the special setups waste stream in concentrations greater than 50 parts per million (ppm). If any containers are identified during RTR/VE as containing PCB items (e.g., light ballasts) greater than 50 ppm, the drums containing the PCB items will be managed and shipped in accordance with the WIPP WAC.[9, 38]

1.6.2.4 Other Special Setups Waste Streams

RF107.07 was reviewed as being pertinent to this waste stream (BN004).[13] A more specific WMC (S3150) was assigned to BN004 by INL; whereas the general WMC (S3190) was assigned to RF107.07 by RFETS for these solidified inorganic waste streams. INL identified the

same WMC S3150 that was identified for IDC 004 in TWBIR. Listed waste EPA HWNs F001, F002, F005, F006, F007, and F009 were assigned to both waste streams; however, EPA HWNs D006, D007, D008, and D011, assigned to BN004 based on AK were retained although the UCL_{90} values were below the PRQL values.[2] EPA HWN D029 was conservatively assigned to BN004 because 1,1-dichloroethylene was detected in HSG sampling and analysis conducted previously at INL.[2]

RF107.07 assigned the additional EPA HWNs P030, P098, P099, P106, U003, U103, and U108, which are associated with RF waste generated after January 1995.[13, 16] None of the post-January 1995 waste is included in this waste stream.

1.7 Radionuclides

The WIPP-tracked radionuclides of concern for special setups waste are ^{238}Pu, ^{239}Pu, ^{240}Pu, ^{242}Pu, ^{233}U, ^{234}U, ^{238}U, and ^{241}Am.[8, 15, 28, 37] The remaining WIPP-tracked radionuclides, ^{137}Cs and ^{90}Sr, are expected to be present in measurable quantities in special setups waste because sources were disposed of in special setups.[47] In addition, tritium, plutonium, americium, depleted uranium, enriched uranium, ^{233}U, ^{55}Fe, ^{237}Np, ^{133}Ba, ^{60}Co, ^{228}Th, and Cm (no isotope specified)[2, 39, 46] were introduced into the solidification process in liquids received or as sources from various buildings.[2]

The ratios of the two most prevalent radionuclides in the container are compared to confirm existing AK data in compliance with WAC requirements.[7] The two most prevalent radionuclides anticipated in the special setups waste drums are ^{239}Pu and ^{240}Pu.[8]

2.0 SHIPPING CONSIDERATIONS

2.1 Waste Packaging

Special setups waste was contained in an O-ring bag inside a prepared 55-gallon drum attached to the glovebox.[18, 20] Approximately 10 to 15 pounds of Portland cement were added on top of the special setups waste before the O-ring bag was sealed. The special setups waste may also be contained in polyethylene bottles (<4 liters) inside the lined 55-gallon drum.[21]

Depending on waste packaging requirements at the time, several combinations of bags and liners were used to prepare 55-gallon drums for shipment. From 1970 to 1972, waste drums were lined with a polyethylene drum bag. Three to five pounds of Portland cement were placed in the bottom of the drum and in the drum bag. Use of the 90 mil rigid polyethylene liner began in 1972.[21] The rigid liner was placed in each drum and lined with a polyethylene round bottom drum liner.[19, 21, 25, 26] Three to five pounds of Portland cement were placed in the bottom of the rigid liner and in the round bottom liner. When a drum was full, the drum liners were twisted and taped closed, the lid was secured with a bolted ring, and a tamper-indicating device was attached to the drum.[19, 21]

After drums were inspected, one to two quarts of absorbent material (Oil-Dri®) was placed on the top of the outer, sealed polyethylene drum bag. This procedure changed in February 1982

when vermiculite was used to fill the space between the outer, sealed polyethylene drum bag and the top of the 90-mil rigid liner. Any combination of plastic bags that does not exceed five layers of confinement (of which no more than three are inner bags) is acceptable for shipment to WIPP.[62]

Although the procedure changed in 1982 and required vermiculite to be used, strict adherence to the procedure was not followed based on observations from RTR and/or VE. As a result the type, amount, and expected time-frame of absorbent use will vary. The quantity of vermiculite varied from 3-12 pounds according to the amount of waste contained in each drum.[21, 62]

Some of the 55-gallon drums may be overpacked into 83- or 85-gallon drums. Either four 55-gallon drums or two 83- or 85-gallon drums, with either the drum lid filters or the drum lids removed, may be direct loaded into an Standard Waste Box (SWB) equipped with approved filters.

2.2 Flammability Consideration

The payload containers in the waste stream must comply with the Contact Handled Transuranic Authorized Methods for Payload Control (CH-TRAMPAC) requirements. As specified in the CH-TRAMPAC, a determination of compliance with the flammable gas limits will be performed for volatile organic compounds (VOCs), hydrogen, and methane. Headspace gas sampling and analysis is performed when required by the Waste Analysis Plan (WAP) and/or CH TRAMPAC. At a minimum, the HSG analytical results are evaluated to determine the total concentration of flammable VOCs present in the waste. Payload containers, including those with HSG results exceeding 500 ppm flammable VOCs, are evaluated for compliance with applicable CH-TRAMPAC requirements prior to shipment. Payloads containing flammable gases are managed in accordance with CCP-PO-003, CCP Transuranic Authorized Methods for Payload Control (CCP CH-TRAMPAC).[61]

3.0 REFERENCES

NOTE: *AMWTP documents such as procedures, AK reports, and operating instructions, are cited without revision numbers or dates. The most recent revisions of these documents are available through the AMWTP Electronic Document Management System (EDMS). Previous revisions are available on EDMS.*

1. RPT-TRUW-12, AMWTP Waste Stream Designations [P393A]

2. INEL-96/0280, Acceptable Knowledge Document for INEEL Stored Transuranic Waste – Rocky Flats Plant Waste, Rev. 3, February 28, 2003 [P368A]

3. NDK-001-10, Memo to file, Estimation of Number of Drums for BN004 Waste Stream, July 5, 2010 [C876A]

4. DOE/WIPP-01-3194, CH-TRU Waste Content Codes (CH-TRUCON)

5. DOE/TRU-2006-3344, Transuranic Waste Baseline Inventory Report, U.S. Department of Energy [P746A]

6. DOE/LLW-217, DOE Waste Treatability Group Guidance, 1995 [P670A]

7. DOE/WIPP-02-3122, Transuranic Waste Acceptance Criteria for the Waste Isolation Pilot Plant, Rev. 6.5, June 30, 2010

8. RPT-TRUW-07, Determination of Radioisotopic Content in TRU Waste Based on Acceptable Knowledge [P398A]

9. MP-TRUW-8.1, Certification Plan for INL Transuranic Waste

10. Memorandum from DOE CAO to J. M. Roberson, RFFO, and J. M. Wilcynski, INEEL, Identification of Defense Waste Streams Generated at Rocky Flats Environmental Technology Site (RFETS), May 20, 1997 [C191A]

11. Correspondence from G. F. Jaskot to Distribution, Certification Waste Documentation, May 9, 1986 [C008A]

12. Record of Conversation of Maurie Maas, March 19, 2003 [C073A]

13. RMRS-WIPP-98-100, Section 7.29, RFETS Acceptable Knowledge TRU/TRM Waste Stream Summaries, TRM Solidified Inorganic Waste (F001, F002, F005, F006, F007, F009, P030, P098, P099, P106, U003, U103, U108), Profile No. RF107.07 [P494A]

14. Telecon between Al Morgan (retired) of Rocky Flats and Jeff Harrison, Building 776 Size Reduction Area, February 27, 1997 [C175A]

15. Interview of Al Morgan, March 19, 1997 [C184A]

16. Backlog Waste Reassessment Baseline Book, Waste Form 60, Solidified Lab Waste [P495A]

17. PSD87-059, EG&G Sampling Program Results FY1987 [P013A]

18. EGG WM 6503, TRU Waste Sampling Program: Volume I Waste Characterization [P015A]

19. INEL-95/0281, Idaho National Engineering Laboratory Code Assessment of the Rocky Flats Transuranic Waste, August 10, 2006 [P016A]

20. PSD86-061, EG&G Drum Sampling Program Results FY1986 [P021A]

21. WM-F1-82-021, Content Code Assessments for INEL Contact-Handled Stored Transuranic Wastes [P024A]

22. INEL-95/0397, Summary of Transuranic Waste Characterization Programs at the INEL (1979-Present) [P033A]

23. Backlog Waste Reassessment Baseline Book [P052A]

24. Tasks 3 & 4 Final Draft Report, Reconstruction of Historical Rocky Flats Operations and Identification of Release Points [P053A]

25. WO-4034-C, Packaging Wastes for Shipment Offsite (U) [P063A]

26. WO 4034-F, Waste Packaging Requirements [P064A]

27. Waste Stream Identification and Characterization [P067A]

28. Operational Safety Analysis (OSA), Waste Receipt and Processing No. 774.001 [P070A]

29. A-008-LWTO, Process Qualification Report for Miscellaneous Waste Handling and Solidification (Bottlebox) Building 774 [P073A]

30. Waste Stream and Residue Identification and Characterization Building 774. Version 3.2 [P077A]

31. Waste Stream and Residue Identification and Characterization Building 776. Version 3.2 [P078A]

32. ISSN 0738-0232, RCRA Land Disposal Restrictions: A Guide to Compliance, The Hazardous Waste Consultant. Vol. 12, Issue 6, 1995 Edition [P080A]

33. Materials Hazards Manual [P091A]

34. Waste Stream Residue Identification and Characterization Building 559, Version 5.0 [P107A]

35. Material Safety Data Sheet for Metex Chemicals [P119A]

36. INEL 95/029, RWMC-EDF-805, Matrix Parameter Category Groups (MPCG) Engineering Design File [P141A]

37. EDF-RWMC-840, Document SWEPP NDA Compliance Development, Bechtel BWXT Idaho, LLC [P240A]

38. Comparison of Real Time Radiography (RTR) and Visual Examination Results of the Stored Waste Examination Pilot Plant Certified Waste Sampling Program. EDF 2710 and the associated RTR-VE Database CD, December 11, 2002 [P321A]

39. Building 774 Set Up Log Book [U043A]

40. A History of the Rocky Flats Plutonium/Actinide Recovery Plant 1952 to 1991, Draft October 30, 1991 [U047A]

41. Toxicity Characteristic Leaching Procedure Test Results of Cemented Surrogate Analytical Laboratory Solution Waste—Part 2 [U054A]

42. Drum Prefix Numbers and Corresponding Material Balance Areas [U059A]

43. Inventory values as generated by TRIPS Change Request (TCR) 1821, May 22, 2001 [U092A]

44. Draft Characterization Report: Characterization of Rocky Flats Plant Special Setups Sludge Waste (IDCs 004, 802) [U107A]

45. Material Safety Data Sheet for OX-Out 536, ChemClean Corporation [P129A]

46. EDF-3374, Radioassay Data Collected During 3100 Cubic Meter Project [P322A]

47. Cs-137/Sr-90 expected only in RF-IDC 004 and 480 wastes, February 28, 2005 [AKR 05 208]

48. WO-4021-C, Miscellaneous Aqueous Waste Handling and Solidification [P496A]

49. Not used

50. Memorandum to file, Waste Material Parameter Weight Calculations and Supporting Data to Determine Waste Material Parameter Weight per Unit of Waste, January 19, 2007 [C534A]

51. INST-OI-12, Real Time Radiography Operations (Drums)[P407A]

52. INST-OI-34, Non-Facility Visual Examination Operations [P387A]

53. Material Safety Data Sheet for Turco, Turco Products various [P605A]

54. Material Safety Data Sheet for Versene, Dow Chemical [P606A]

55. Material Safety Information for Kepro, Kepro Circuit System various [P607A]

56. RFP-1985, The Heats of Solution of Beryllium in Chemical Milling Solutions, James D. Navratil and Franklin L. Oetting [P608A]

57. MP-TRUW-8.13, Collection, Review and Management of Acceptable Knowledge Documentation [P418A]

58. BBWI-Generated Drum Data, including Data from the Transuranic Waste Management Information System (TWMIS) [U127A]

59. RPT-TRUW-56, Acceptable Knowledge Document for INL Stored Transuranic Waste – Rocky Flats Plant [P649A]

60. Interim Guidance on Ensuring that Waste Qualifies for Disposal at the Waste Isolation Pilot Plant [P203A]

61. CCP-PO-003, CCP Transuranic Authorized Methods For Payload Control (CCP CH TRAMPAC), Central Characterization Project, Rev. 11, June 4, 2009

62. RPT-TRUW-05, Waste Matrix Code Reference Manual [P399A]

63. MP-TRUW-8.2, Quality Assurance Project Plan

64. Material Safety Data Sheets, Aquaset® (sodium montmorillonite) and Aquaset II-G® (sepiolite) Fluid Tech, January 1, 2005 and November 1, 2008 [P881S]

65. Material Safety Data Sheet, Micro-Cel®E, Celite Corporation, January 17, 2007 [P808S]

66. RCM-001-10, Memo to file, Earliest Pack Date for Rocky Flats Waste Retrieved from Pits 11 and 12, July 5, 2010 [C875S]

67. DOE/TRU-20098-3425, Annual Transuranic Waste Inventory Report -2009 [P838A]

AMWTP Advanced Mixed Waste Treatment Project	Waste Stream Profile Form HWN Assignment Worksheet	AMWTP Form 1187 Effective Date: 07/17/02, Rev. 1 MP-TRUW-8.13 Page 1 of 1

WSPF Number: BN004 (RF004, RF802)

AK Source Document / Rev. Number: AMWTP-RPT-TRUW-59, Rev.0

hwm	(1) AK ASSIGNED	(2) STORAGE	(3) RECONC.	(4) DELETE RECONC.	(5) ITEMS/ CONST.	(6) FINAL	(7) PERMIT-TED
F001	X					X	✔
F002	X					X	✔
F003							✔
F004							✔
F005	X					X	✔
F006	X					X	✔
F007	X					X	✔
F009	X					X	✔
D004							✔
D005							✔
D006	X					X	✔
D007	X					X	✔
D008	X					X	✔
D009							✔
D010							✔
D011	X					X	✔
D022							✔
D029	X					X	✔
D032							✔

AK Expert: Vivian Sendelweck Vivian Sendelweck Date: 3/30/06
Print/Sign

Site Project Manager: R A Eschenbach Date: 3/30/06
Print/Sign
R A ESCHENBACH

Implementing Document: MP-TRUW-8.13

Waste Stream or Waste Type Description: Special Setups

Waste Stream or IDC Number: BN004

AK Information	AK#<1>	Source Document Reference Number
Generator site TRU waste stream (WS) - specific information		
Information identifying the building(s) and/or area (s) from which TRU waste was or is generated.	WS1	C001A, C073A, C184A, C522A, C618A, C822S, C842S, D061A, P001A, P012A, P014A, P016A, P024A, P052A, P067A, P1031A, P127A, P319A, P368A, P435S, P442A, P443A, P494A, P495A, P496A, P608A, P609A, P621A, P649A, P667A, P671S, P717A, P733S, P741A, P744A, P746A, P755A, P759S, P847A, P888A, P953A, U043A, U059A, U069A, U119A, U215A, U223A
Waste stream volume and time period of generation.	WS2	C499A, C507A, C522A, C534A, C535A, C543S, C620A, C842S, C855A, C856A, C861A, C875S, C876A, D032A, D061A, P024A, P090A, P1031A, P127A, P198A, P318A, P319A, P364A, P365A, P368A, P400A, P442A, P443A, P567A, P609A, P621A, P649A, P671S, P743A, P744A, P746A, P755A, P758A, P759S, P826A, P838A, P847A, P888A, U043A, U059A, U069A, U122A, U127A, U215A, U223A, U235S
Waste generating process description for each building, including processes with U134 waste generation, if applicable and process flow diagrams. See instructions if process flow diagrams are not available.	WS3	C008A, C010A, C014A, C175A, P001A, P012A, P014A, P015A, P016A, P024A, P052A, P067A, P070A, P073A, P078A, P107A, P319A, P368A, P435S, P442A, P443A, P494A, P496A, P608A, P609A, P621A, P649A, P667A, P671S, P717A, P743A, P744A, P746A, P758A, P759S, P888A, U043A, U119A
Material inputs or other information identifying chemical content, and event or process that may have modified the chemical properties after generation. Include data for newly generated waste obtained through VE and/or radiography, information demonstrating neutralization of U134 waste and chemical composition that could affect the isotopic distribution.	WS4	C063A, C065A, C085A, C245A, C546S, D061A, D070A, D076A, P016A, P024A, P033A, P052A, P053A, P070A, P091A, P107A, P119A, P164A, P207A, P307A, P310A, P319A, P365A, P368A, P393A, P401A, P409A, P435S, P442A, P443A, P494A, P495A, P496A, P605A, P606A, P607A, P608A, P609A, P621A, P649A, P667A, P717A, P744A, P759S, P808S, P888A, U043A, U054A, U107A, U119A

Implementing Document: MP-TRUW-8.13

AK Information	AK#<1>	Source Document Reference Number
Generator site TRU waste stream (WS) - specific information		
Material inputs or other information identifying physical waste form, and event or process that may have modified the physical properties after generation. Include data obtained through RTR or VE of newly generated waste and physical composition that could affect the isotopic distribution.	WS5	C313A, C315A, C316A, C460A, C499A, C504A, C534A, C546S, C566S, C620A, C840S, C841S, C842S, D061A, P001A, P012A, P014A, P015A, P016A, P021A, P024A, P039A, P043A, P052A, P063A, P064A, P070A, P073A, P090A, P141A, P207A, P319A, P365A, P368A, P372A, P393A, P399A, P435S, P442A, P443A, P465A, P494A, P495A, P496A, P567A, P605A, P606A, P607A, P608A, P609A, P621A, P649A, P667A, P670A, P717A, P741A, P744A, P746A, P755A, P758A, P759S, P838A, P847A, P881S, P888A, U119A, U223A, U230A
EPA hazardous waste constituents in the waste stream and Hazardous Waste Numbers assigned.	WS6	C065A, C079A, C085A, C245A, C313A, C566S, C607A, C840S, C841S, D001A, D011A, D064A, D070A, D076A, D077A, P012A, P013A, P015A, P016A, P052A, P053A, P080A, P207A, P307A, P310A, P365A, P368A, P393A, P435S, P442A, P443A, P494A, P495A, P605A, P606A, P607A, P609A, P649A, P667A, P668S, P717A, P733S, P743A, P744A, P756A, P838A, U046A, U054A, U059A, U060A, U082A, U107A
Specification of the isotopic ratios for the 10 WIPP-tracked radionuclides (241Am, 238PU, 239 Pu, 240 PU, 242Pu, 233U, 234U, 238 U, 90 Sr, and 137Cs) and the radionuclides comprising 95% of the hazard.	WS7	C002A, C130A, C222A, C281A, C285A, C459A, C506A, C551A, C552S, C566S, C840S, C841S, D051A, P024A, P090A, P198A, P227A, P240A, P307A, P322A, P368A, P398A, P435S, P442A, P443A, P494A, P609A, P611A, P621A, P649A, P743A, P744A, P745A, P755A, P759S, P838A, P888A, U043A, U235S
Documentation identifying the presence of prohibited items listed in Section B-1c of the WIPP-WAP.	WS8	C073A, C321A, C511A, C516A, C842S, D070A, P001A, P012A, P013A, P015A, P016A, P021A, P024A, P063A, P358A, P368A, P372A, P399A, P442A, P443A, P465A, P609A, P649A, P667A, P733S, P741A, P744A, P888A, U215A, U223A
<1> The AK#'s are to be used in the Acceptable Knowledge Source Document Summary to aid in the identification of program and waste stream-specific elements within a given document.		

All required AK information has been compiled and tracking numbers assigned.

AK Expert: Nancy Kirk / Nancy Kirk Date: 9/16/10
Print/Sign Date

Site Project Manager: Steve Carpenter Date: 9/16/10
Print/Sign

LDR NOTIFICATION- IDCs RF004 RF802 RF744

WASTE STREAM BN004

The mixed waste identified on manifest number _____ and bearing the EPA hazardous waste numbers D006, D007, D008, D011, D029, F001, F002, F005, F006, F007, and F009 are designated as transuranic (TRU) mixed waste and have been exempted from the land disposal prohibitions of 40 CFR 268 by the Land Withdrawal Act Amendments (Public Law 104-201). This amendment exempts WIPP waste from treatment standards promulgated pursuant to section 3004(m) of the Solid Waste Disposal Act [42 U.S. C. 6924(m)] and are not subjected to the Land Disposal Prohibitions in section 3004(d), (e), (f), and (g) of the Solid Waste Disposal Act. This waste is not prohibited for land disposal.

Container Identification numbers	Hazardous waste number(s)	Land Disposal Prohibition effective date
	D006	May 26, 2000
	D007	May 26, 2000
	D008	May 26, 2000
	D011	May 26, 2000
	D029	December 19, 1996
	F001	Nov 8, 1986
	F002	Nov 8, 1986
	F005	Nov 8, 1986
	F006	July 8, 1989
	F007	July 8, 1989
	F009	July 8, 1989

AMWTP
Advanced Mixed Waste Treatment Project

Bechtel BWXT Idaho, LLC

December 21, 2005 CCN 05-1550

Mr. Dale Bignell
Washington Regulatory and Environmental Services
4021 National Parks Highway
Carlsbad, NM 88220

Subject: Contract No. DE-AC07-99ID13727- Waste Stream Profile, BN004 - SPC-087-2005

Dear Mr. Bignell:

Attached is Waste Stream Profile (WSPF), BN004, Special Setups Waste, and AMWTP-RPT-TRUW-59, *Acceptable Knowledge Summary for Special Setups Waste (BN004)*, for your review and approval. We have evaluated and reviewed the profile, and believe it is compliant with the WAP.

If you have any questions feel free to call me at (208) 557-6323 or Eric P. Schweinsberg (208) 557-6425.

Sincerely,

Steve Carpenter
Acceptable Knowledge/ Alternate Site Project Manager
Bechtel BWXT Idaho, LLC
Advanced Mixed Waste Treatment Project

SPC:cc

cc: Rod Arbon, BBWI
Steve Carpenter, BBWI
Rick Chavez, WRES
Joan Connolly, BBWI
Elvin Dumas, BBWI
Guy Girard, DOE-ID
Tally Jenkins, DOE-ID
Ron Reeves, WRES
Frank Russo, BBWI
Jerry Wells, DOE-ID
Ed Ziemianski, DOE-ID
WIPP Site Documents

AMWTP
Advanced Mixed Waste Treatment Project

RPT-TRUW-06, Rev. 16

Acceptable Knowledge Document for AMWTP Waste

Advanced Mixed Waste Treatment Project

(Signature on file. See DCR-13025.)

05/12/14
Date

REVISION LOG

Revision Number	Date Approved	Pages Affected	Description of Revision
0	06/30/2003	All	DCR-2331. Initial issue
1	11/20/2003	Various	DCR-2527. Added Appendix A and B. Added newly created IDC 512. Update container numbers in Table 5-1. Misc. editorial changes.
2	03/07/2005	Various	DCR-4174. Provide a flowchart of the AMWTP AK documentation process. Add Bettis Atomic Power Laboratory.
3	07/14/2005	Various	DCR-4232. Various changes to make IDC information consistent with other TRU program documents.
4	08/22/2005	Various	DCR-4492. Add subtitle of "Baseline AK for Newly Generated Waste". Misc. editorial changes.
5	03/07/2006	Various	DCR-4523. Reorganized the entire document to enhance usability.
6	04/10/2006	Various	DCR-4873. Delete Appendix C. Appendix D becomes Appendix C. Misc. editorial changes.
7	07/25/2006	Various	DCR-5008. Delete Figure 1. Revise text per CAR 22295. Misc. editorial changes.
8	08/15/2006	Various	DCR-5223. Add material to section 6.1.3 to document recent PCB contamination events. Update references and Table B-1.
9	08/23/2007	All	DCR-6308. Add Revision Log. Misc. editorial changes. Total rewrite.
10	08/27/2008	App. A & B	DCR-7480. Update appendices to make consistent and correct generation dates.
11	07/13/2009	Various	DCR-7529. Add references to footnotes in Table 2a. Reword Page 39 for clarity.
12	08/19/2010	All	DCR-9296. Rewrite.
13	08/19/2010	All	DCR 9480. Rewrite of entire report to include all AMWTP waste generating processes. Added sections for the various waste groups generated during processing.
14	07/05/2012	Cover page	DCR-10659. Applied ITG Bluesheet-077 and updated document owner.

Revision Number	Date Approved	Pages Affected	Description of Revision
15	10/23/2013	ALL	DCR-12707. Complete rewrite to bring document current with changes over time.
16	05/12/14	All	DCR-13025. Updated document to include SD and LA IDCs. Updated to address operational/programmatic changes since the last revision. Updated IDC descriptions as needed to match TRUW-05. Updated figures and references as needed.

CONTENTS

1.0 INTRODUCTION 1

2.0 REQUIREMENT AND GUIDANCE DOCUMENTS 2

3.0 AMWTP WASTE MANAGEMENT 2

3.1 Facility Location 2

3.2 Site Description and History 2

3.3 Mission 13

3.4 Defense and WIPP Land Withdrawal Act Determinations 13

3.5 AMWTP TRU Waste Management 15

3.6 Waste Generation Operations 16

3.7 Radionuclides 51

3.8 Waste Certification 52

3.9 Waste Characterization 52

3.10 Correlation of Wastes Generated 52

4.0 TRU LIQUID WASTE GROUP 53

4.1 Liquids Released During Supercompaction of Debris Waste Containers 53

4.2 Liquids Segregated or Collected from Stored Waste 58

4.3 Liquids Generated from Maintenance Activities 59

5.0 S3000 HOMOGENEOUS SOLIDS WASTE GROUP 59

5.1 Absorbed Squeezants 59

5.2 Homogeneous Solids 65

5.3 Absorbed Liquids 73

5.4 AMWTP Laboratory Homogenous Solids 78

6.0 S4000 SOIL WASTE GROUP 79

6.1 Soil 79

7.0 S5000 HETEROGENEOUS DEBRIS WASTE GROUP 85

7.1 Non-PCB Debris Waste 85

7.2 WMF-676 Facility Repackaged TRU Debris Waste 99

7.3 Secondary Heterogeneous Debris Waste from Offsite Waste 108

7.4 AMWTP Heterogeneous PCB Debris Waste 114

7.5 WMF-676 PCB-Contaminated Debris Waste 121

7.6 AMWTP Laboratory Debris Waste 129

8.0 DEFINITIONS 130

9.0 REFERENCES 131

FIGURES

Figure 1. Location of the RWMC including the TSA and SDA at the INEL. 4

Figure 2. Map of the Transuranic Storage Area (TSA). 5

Figure 3. TSA-RE. 6

Figure 4. Process flow diagram for Supercompactor squeezants. 55

Figure 5. Process flow diagram for absorbed squeezants waste. 61

Figure 6. Process flow diagram for homogeneous solids waste. 69

Figure 7. Process flow diagram for absorbed liquids (excluding squeezants) 75

Figure 8. General process flow diagram for the primary activity that generates AMWTP soil 81

Figure 9. General flow diagram for newly generated debris waste from maintenance/ monitoring and cleanup activities. 91

Figure 10. General flow diagram for newly generated debris waste from characterization. 92

Figure 11. General flow diagram chart for supercompaction operations. 102

Figure 12. Offsite waste characterization and support activities. 110

Figure 13. General PCB debris flow diagram for BN-523, BN-536, and BN-604. 117

Figure 14. Waste diagram for waste within the BN-600 WIPP waste stream. 125

TABLES

Table 3.1. Offsite waste generators 9

Table 3.2. Non-AMWTP generators 10

Table 3.3. AMWTP buildings, operations, and processes/activities associated with TRU waste generation 11

Table 3.4. Operations, processes, building/area, and applicable procedures 17

Table 3.5. Waste container handling operations, processes, buildings/areas, and applicable procedures 21

Table 3.6. Maintenance operations, processes, buildings/areas, and applicable procedures 27

Table 3.7. Waste characterization operations, processes, buildings/areas, and applicable procedures 36

Table 3.8. Waste treatment operations, processes, buildings/areas, and applicable procedures 42

Table 4.1. Squeezants IDC, waste description, and generation date. 53

Table 4.2. Liquids segregated or collected from stored waste IDCs, waste descriptions, and generation dates. 59

Table 4.3. Liquids generated from maintenance activities waste IDC, waste description, and generation date. 59

Table 5.1. Absorbed squeezants IDCs, waste descriptions, and generation dates. 59

Table 5.2. TRU homogeneous solids IDCs, waste descriptions, and generation dates. 66

Table 5.3. TRU absorbed liquid IDCs, waste descriptions, and generation dates. 73

Table 5.4. AMWTP Laboratory homogeneous solids waste IDCs, waste descriptions, and generation dates. 79

Table 6.1. AMWTP TRU soil waste IDCs, wastes descriptions, and generation dates. 79

Table 7.1. Newly generated non-PCB debris waste IDCs, waste descriptions, and generation dates. 86

Table 7.2. Area of generation with generation process and applicable report section for each heterogeneous debris waste 89

Table 7.3. Supercompacted debris waste IDCs, waste descriptions, and generation dates. 100

Table 7.4. Secondary debris waste generated from offsite waste IDCs, waste descriptions, and generation dates 108

Table 7.5. AMWTP heterogeneous PCB debris waste IDCs, waste descriptions, and generation dates. 114

Table 7.6. WMF-676 PCB-contaminated debris waste IDC, waste descriptions, and generation date. 121

Table 7.7. AMWTP laboratory debris waste IDCs, waste descriptions, and generation dates. . 129

ACRONYMS

AE	Argonne National Laboratory–East (generator site code)
AK	acceptable knowledge
AMWTF	Advanced Mixed Waste Treatment Facility
AMWTP	Advanced Mixed Waste Treatment Project
ARA	Auxiliary Reactor Area
ARP	Accelerated Retrieval Project
AW	Argonne National Laboratory–West (aka MFC generator site code)
B&W	Babcock and Wilcox
BBWI	Bechtel, BWXT Idaho, Inc.
BC	Battelle Columbus (prefix)
BL	Bettis Laboratory (generator site code)
BN	BNFL Inc. (generator site code) now used to represent AMWTP
BNFL	British Nuclear Fuels Limited
BOGR	Box Opening Gantry Robot
Brokk	Remote Controlled Demolition Robot
BRSOP	Bull Run soft-sided overpacks
BW	Babcock and Wilcox (generator site code)
BX	Bendix-Grand Junction Operation Office (generator site code)
CBFO	Carlsbad Field Office
CCP	Central Characterization Program
CFA	Central Facilities Area
CFC	chlorofluorohydrocarbons
CFR	Code of Federal Regulations
CH	contact-handled
CPP	Chemical Processing Plant (now: INTEC)
D&D	decontamination and decommissioning
DCSRS	Drum Core Sample Retrieval System
DIEG	Drum Import/Export Glovebox
DOD	Department of Defense
DOE	Department of Energy
DOHE	Drum Opening Hood Enclosure
DOS	Drum Opening Station
DOT	Department of Transportation
DRF	Drum Re-overpacking Facility
DRS	Drum Repacking Facility
DTF	Drum Treatment Facility
DU	depleted uranium
DVF	Drum Vent Facility
DVS	drum vent system
DWHE	drummed waste handling enclosure
DWPG	drummed waste packaging glovebox

EMOP	eight-drum metal overpack pallet
EPA	Environmental Protection Agency
EU	enriched uranium
EWR	Early Waste Retrieval Project
FGE	fissile gram equivalent
FRP	fiberglass-reinforced plywood
FTS	Fuel Tracking System
GC/S	gas chromatography
GC/TCD	gas chromatography thermal conductivity detector
GEV	General Electric – Vallecitos
GEVNC	General Electric – Vallecitos
GGT	Gas Generation Testing
GGTC	Gas Generation Testing Canister
GGTS	Gas Generation Testing System
HEPA	high-efficiency particulate air
HGAS	headspace gas sampling
HS	heat source
HWD	hazardous waste determination (AMWTP Waste Characterization Checklist Form-1086)
HWMA	Hazardous Waste Management Area
HWN	hazardous waste number
IC	Idaho Nuclear Technology and Engineering Center (generator site code)
ID	Idaho National Engineering and Environmental Laboratory (generator site code)
IDC	item description code
IDR	Initial Drum Retrieval Project
IH	industrial hygienist
INL	Idaho National Laboratory
INTEC	Idaho Nuclear Technology and Engineering Center
IS/IH	Industrial Safety/Industrial Hygiene
ITG	Idaho Treatment Group
ITP	Import Transfer Port
IW	Radioactive Waste Management Complex (generator site code)
JH	J. C. Haynes, Ohio businessman who irradiated diamonds with Am-241 (generator site code)
LA	Los Alamos National Laboratory (generator code)
LANL	Los Alamos National Laboratory
LBNL	Lawrence Berkeley Laboratory
LOFT	Loss-of-Fluid Test
LLNL	Lawrence Livermore National Laboratory
LLW	low-level waste
M&O	Management and Operating
m^3	cubic meter

MD	Mound Laboratory (generator site code)
MFC	Materials and Fuels Complex (aka ANL-W)
MLLW	mixed low-level waste
MO	Monsanto-Dayton Laboratory (generator site code)
MP	management procedure
MS	mass spectrometer
MTRU	mixed transuranic waste
MX	Am-241 waste from a smoke detector manufacturing company in Mexico (generator site code)
nCi	nanocuries
NDA	nondestructive assay
NDE	nondestructive examination
NNSS	Nevada National Security Site (previously Nevada Test Site)
NRF	Naval Reactor Facility
NWPA	Nuclear Waste Policy Act
OR	Oak Ridge National Laboratory (generator site code)
ORNL	Oak Ridge National Laboratory
PAM	packet assay monitor
PCB	polychlorinated biphenyl
PI	prohibited item
PK	process knowledge
PPE	personal protective equipment
ppm	part per million
QAPjP	Quality Assurance Project Plan
RBAS	Retrieval Box Assay System
RCRA	Resource Conservation Recovery Act
RE	Retrieval Enclosure
RF	Rocky Flats Plant (generator site code)
RFETS	Rocky Flats Environmental Technology Site
RFP	Rocky Flats Plant (name of site for waste stored at INL)
RH	remote-handled
RL	Richland, Washington – Hanford Site (generator site code)
RT	Radiological Technician
RTR	real-time radiography
RWMC	Radioactive Waste Management Complex
RWMIS	Radioactive Waste Management Information System
S/C	Supercompactor
SCG	summary category group
SCW	special case waste
SD	Radioactive Waste Management Complex (generator site code)
SDA	Subsurface Disposal Area
SDOP	six-drum overpack
SMOP	six-drum metal overpack pallet

SNF	spent nuclear fuel
SNL	Sandia National Laboratory
SRS	Savannah River Site
SVOC	semivolatile organic compound
SWB	standard waste box
TAA	Temporary Accumulation Area
TAN	Test Area North
TRA	Test Reactor Area
TRAMPAC	TRUPACT-II Authorized Methods for Payload Control
TRU	transuranic
TSA-RE	Transuranic Storage Area-Retrieval Enclosure
TSCA	Toxic Substances Control Act
TWBIR	Transuranic Baseline Inventory Report
UN	Unknown or Undefined (generator site code)
VE	visual examination
VDOP	virtual drum overpack (SDOP, SMOP, or EMOP)
VOC	volatile organic compound
WAC	waste acceptance criteria
WAP	Waste Analysis Plan
WG Pu	weapons-grade plutonium
WIPP	Waste Isolation Pilot Plant
WM	Waste Management
WMC	Waste Matrix Code
WMC	waste matrix code
WMCG	waste matrix code group
WMF	Waste Management Facility
WS	waste stream
WSPF	Waste Stream Profile Form
WTS	Waste Tracking System

EXECUTIVE SUMMARY

This Advanced Mixed Waste Treatment Project (AMWTP) document was developed to compile information for transuranic (TRU) waste generated at the Idaho National Laboratory (INL) AMWTP. It includes acceptable knowledge (AK) waste management (WM) program and waste stream (WS) information (WM and WS elements) required by the Waste Isolation Pilot Plant (WIPP) Waste Acceptance Plan (WAP) and Waste Acceptance Criteria (WAC). [4]

AMWTP waste is generated from: the processing and management of waste containers historically stored at the AMWTP; conducting laboratory analysis (no longer generated); and from management of waste containers received at AMWTP under the AMWTP Offsite Waste Program. This document is compiled in accordance with MP-TRUW-8.13, Collection, Review, and Management of Acceptable Knowledge Documentation. [1]

1.0 INTRODUCTION

WIPP-required WM program and WS information specific to AMWTP newly generated TRU waste is described in this document. The focus of this report is to provide the pertinent AK for TRU waste generated at the AMWTP and destined for disposal at the WIPP facility.

AMWTP waste is generated during processing of waste containers from three principal sources:

1. Retrieval and management of containers historically stored in the INL Radioactive Waste Management Complex (RWMC) Transuranic Storage Area-Retrieval Enclosure (TSA-RE) and Transuranic Storage Area (TSA) Type II Storage Modules (now the AMWTP) and

2. Management of containers received at AMWTP through the Offsite Waste Program from:

   a. Non-AMWTP INL facilities (e.g., Materials and Fuels Complex [MFC], Idaho Nuclear Technology and Engineering Center [INTEC], RWMC)

   b. U.S. Department of Energy (DOE) offsite facilities (e.g., U.S. DOE regional and national sites).

3. Supercompaction process.

The waste generation operations that may generate TRU AMWTP waste include waste container retrieval, waste container handling, maintenance, waste characterization, and waste treatment processes/activities.

The wastes stored, characterized, treated, and managed by the AMWTP include TRU, mixed TRU (MTRU), LLW, and mixed low-level waste (MLLW), as defined in Section 7.6. [6] This document only addresses both TRU and MTRU waste. AMWTP TRU wastes are grouped in preliminary waste groups, as outlined in Section 3.10 for this document; which may not represent the final waste stream delineation that is determined for a WIPP waste stream profile form (WSPF).

2.0 REQUIREMENT AND GUIDANCE DOCUMENTS

In accordance with the State of New Mexico Resource Conservation and Recovery Act (RCRA) permit for the WIPP facility (Attachment C, Waste Analysis Plan), prior to shipping waste to WIPP AK must be obtained for each waste stream and the information must be placed into an auditable record. [3]

AK is obtained and placed into the AMWTP AK auditable records in accordance with the AMWTP MP-TRUW-8.13, Collection, Review, and Management of Acceptable Knowledge Documentation. [1]

- The MP-TRUW-8.13 management procedure (MP) provides an outline of the methods used by AMWTP personnel and/or subcontractors in the collection, review, compilation, evaluation, and management of AK documents. The procedure outlines the required information to be placed into AMWTP AK documents.[1]

3.0 AMWTP WASTE MANAGEMENT

3.1 Facility Location

The AMWTP is located on the INL site in southeastern Idaho in the RWMC. (Figure 1) The AMWTP site includes the TSA. (Figure 2)

3.2 Site Description and History

The TSA is a 56-acre area of the INL RWMC (Figure 1) established in 1970 for TRU waste storage and consists of Waste Management Facility (WMF)-636 TSA-RE, WMF-635 Type I and WMF-628 through MWF-634 Type II storage modules, WMF-676 Treatment facility, and various other buildings. (Figure 2) Waste containers from DOE, U.S. Department of Defense (DOD) and INL facilities were shipped to Idaho and stored at the TSA beginning in 1970. In 2003, British Nuclear Fuels Limited (BNFL) was awarded the contract to manage the TSA area, build the Advanced Mixed Waste Treatment Facility (AMWTF), and retrieve and process the accessibly stored waste remaining in the Type I and Type II storage modules and the retrievably stored waste located in the TSA-RE. Two of the Type II modules, WMF-628 and WMF-634, were modified and are now used as characterization facilities. In 2004, management of the AMWTP was assumed by Bechtel, BWXT Idaho, Inc. (BBWI). In 2011, management of AMWTP was assumed by Idaho Treatment Group (ITG).

Three asphalt pads located on the west side of the TSA: TSA-1 (Pad-1), TSA-2 (Pad-2), and TSA-R (Pad-R) are divided into cells. There are eight cells in Pad 1, three cells in Pad 2, and three cells in Pad R. (Figure 3) From 1970 through 1982, waste containers (i.e., 55-gallon and 83/85-gallon drums) were stacked either horizontally or vertically on Pads 1 and 2. Boxes were positioned around the outside of each cell and between stacks of drums to provide stability. The retrieval pad (Pad R) constructed to receive waste retrieved from the RWMC Subsurface Disposal Area (SDA) was finished in August 1975. (Figure 1) Waste containers packaged in fiberglass-reinforced plywood (FRP) and Sandia boxes, metal bins, and cargo containers were

placed for storage on Pad R from 1975 through 1982. Waste retrieved from the SDA in 1974 and early 1975 was overpacked into 83-gallon drums and stored on Pad 1 (Cells 7 and 8). As each cell reached its volume limit, the waste containers were covered with plywood and other sheeting materials (e.g., tarp or polyvinyl sheeting) followed by a minimum of 2 ft of soil cover above the highest container in the cell. Side burden soil was added to reduce the grade angle and soil was also placed between cells to act as a firebreak. Interstitial soil may be located between containers and the surrounding area. Soil over some of the containers may have exceeded 4 ft in depth. Some containers stored on Pad-R were covered with plastic or tarps only. [12, 47, 78]

From 1982 through 1992, additional waste containers received at the TSA were stored in a temporary air-support building located east of the earthen covered TSA (bermed pads). In 1993, seven Type II storage modules (WMF-628, -629, -630, -631, -632, -633 and -634) and one Type I storage module (WMF-634) were built on the east side of the bermed pads for added storage capacity and long term storage. (Figure 2) Transfer of waste containers from the air-support building to the Type II storage modules began in 1994. In 1996, the Retrieval Enclosure (RE) was constructed over the bermed pads to create the TSA-RE (WMF-636). [78]

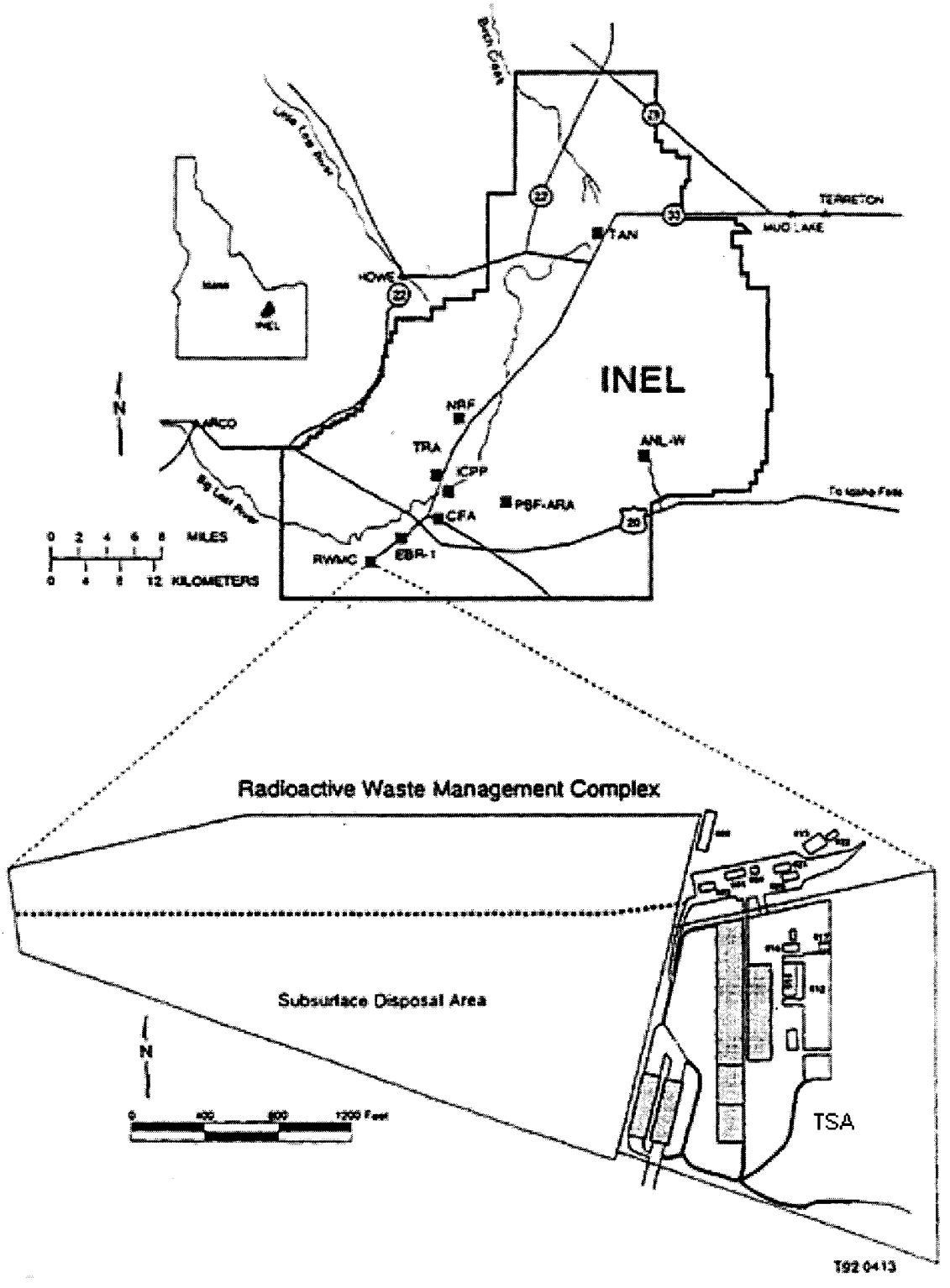

Figure 1. Location of the RWMC including the TSA and SDA at the INEL. [78]

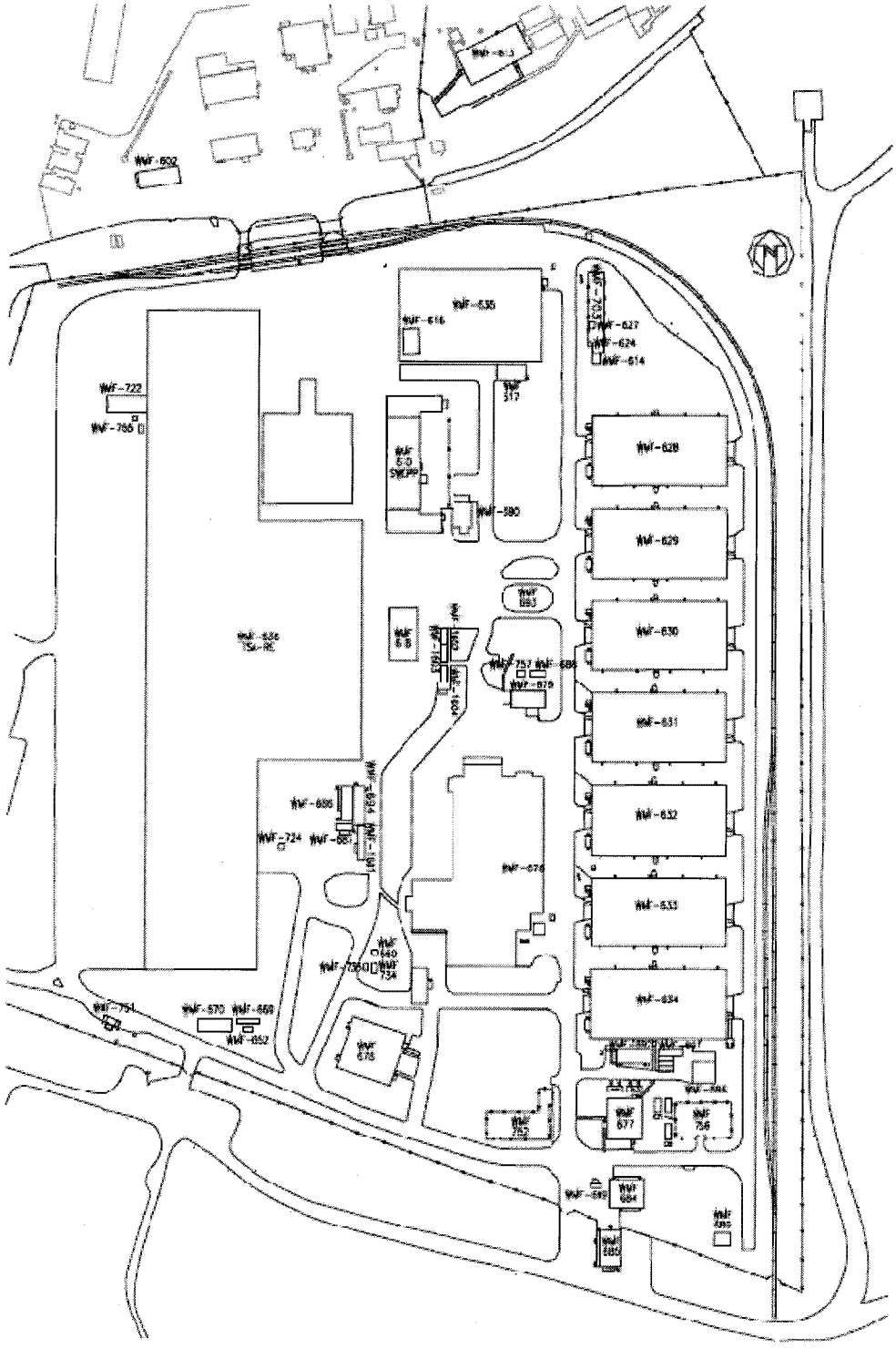

Figure 2. Map of the Transuranic Storage Area (TSA).[13]

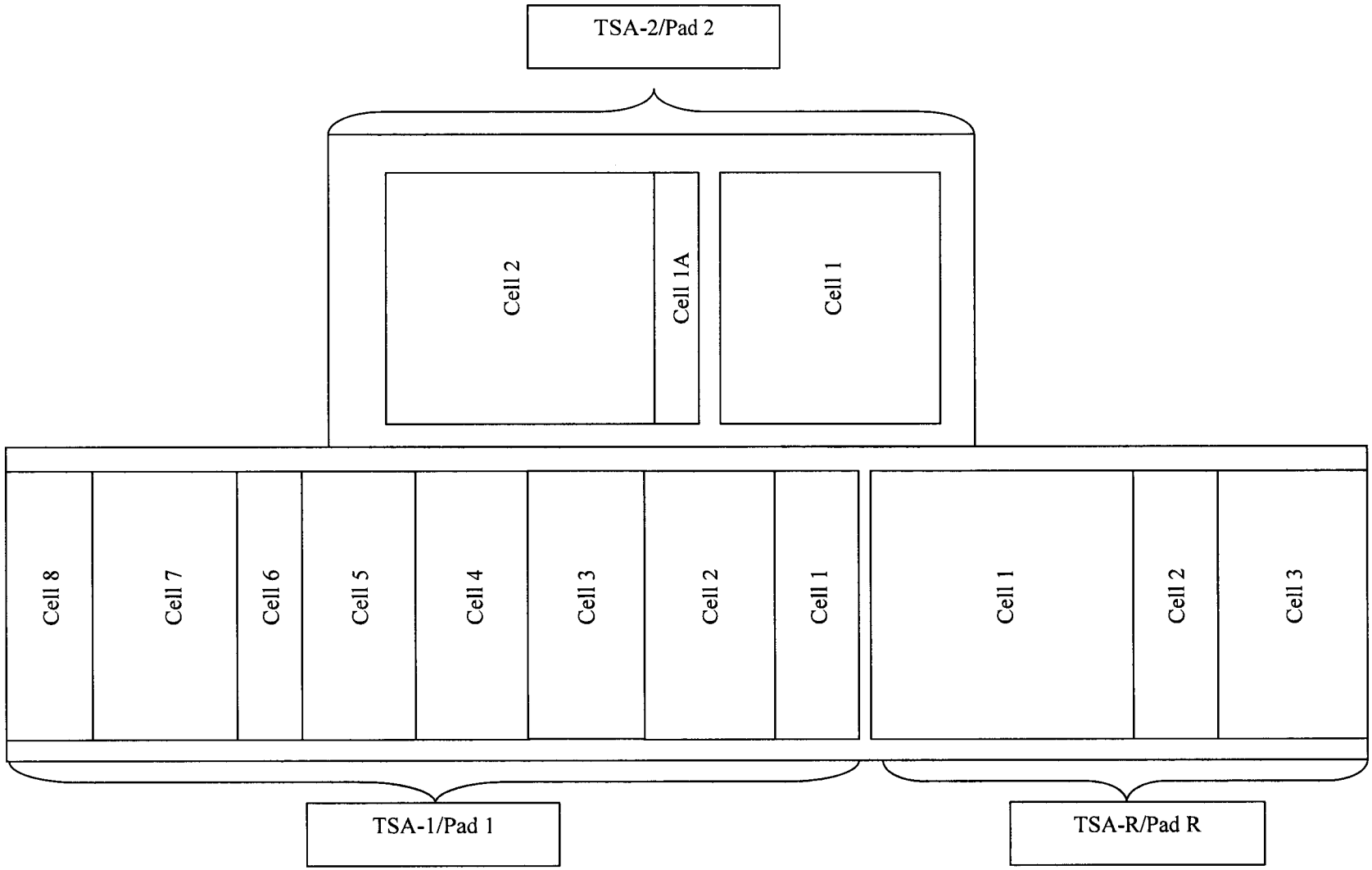

Figure 3. TSA-RE.[78]

3.2.1 Historically Stored Waste Description and Origin

Over 100,000 containers (boxes and drums) of waste containing >10 nCi/g TRU were stored on Pad-1, Pad-2, and Pad R. Storage of waste containers on the pads began November 1970, with Pad 1, Cell 1. Approximately 80,000 containers, of which 90% are 55-gallon steel drums, were stored on Pads 1 and 2. Waste containers retrieved from the RWMC SDA during the initial drum retrieval (IDR) and the early waste retrieval (EWR) projects were overpacked into 83-gallon drums, cargo containers, and M-III bins. The waste overpacked in 83-gallon drums prior to construction of Pad R were stored on Pad 1 in Cells 7 and 8. The cargo containers and MIII bins were stored on Pad R, Cell 1. Non-SDA waste packaged in boxes and bins received between November 1980 and July 1982 was stored on Pad R, Cells 2 and 3. Non-AMWTP waste generators, the time periods of waste receipt, and TSA storage locations are listed in Table 3.1. [13, 47, 78]

Boxed waste was placed around the perimeter of the Pads-1 and 2 cells. Drums were stacked inside these areas. Boxed waste was also placed in rows inside the cell area to provide stability. All of the drums in Pad-1, Cells 1 and 2 were stacked horizontally. The majority of the drums in Pad-1, Cells 3 and 4 were stacked horizontally with some drums stacked vertically. All drums stored in Pad-1, Cells 5, 6 and 8 and Pad-2, Cells 1, 1A and 2 were vertically stacked. In the Pad-1, Cell 7 a majority of the drums was stacked vertically with a small number of drums stacked horizontally. Most stacks were covered with wood, polyvinyl sheeting, and 2 to 3 ft (0.6 to 0.9 m) of soil. Waste containers on the south end of the Pad-1 were not covered with soil. In 1996, about 25 years after the first waste containers were covered with soil, a large steel building, the retrieval enclosure (i.e., TSA-RE) was constructed over the waste, shielding the estimated 80,000 containers. [47, 78]

Waste containers retrieved from the SDA (Pits 1, 2, 11, and 12, Trenches 1, 5, 7, 8, 9, and 10) during the IDR and EWR from 1974 through 1978 were overpacked into 83-gallon drums, wooden boxes, MIII/MIV bins, and cargo containers. Most of the 83-gallon drums were stored on Pad-1 Cells 7 and 8. The bins and cargo containers were stacked on Pad R, Cell 1 and also covered with soil and other materials. Each cargo container was loaded during retrieval with anywhere from 29 to 96 containers, depending on the size of containers (e.g., 30-gallon, 55-gallon, 83-gallon). Drums were stacked vertically with plywood sheets placed between the layers. Absorbent material was placed around each drum on the container floor and on top of the plywood sheets. The waste containers retrieved during the IDR includes combustible, compactable, homogeneous solid, and depleted uranium oxide received from Rocky Flats (RF) between April 1970 and September 1972. The EWR waste originated at generators prior to 1964 and is over packed in approximately 75 MIII bins. The remaining 283 MIII bins contain waste containers retrieved from Pits 11 and 12 during the IDR. Each bin contains 3 to 12 inner containers with an average of eight containers per bin. It is assumed that the majority of the waste originated at RF. [47]

There are an estimated 105 oversize boxes (i.e., dimensions exceed the box size waste acceptance criteria for the AMWTF) in the AMWTP inventory stored on TSA-R, Cells 2 and 3. The boxes contain waste from RF, Mound Laboratory (MD), and waste retrieved during the EWR project. The majority of the contents is large equipment (e.g., gloveboxes from MD, piping from RF). These boxes will be evaluated in the future for possible unpacking and sizing. [28]

Additional boxed waste stored on Pad R, Cells 2 and 3 was shipped to the TSA by RF, MD, Argonne National Laboratory-East (ANL-E) and the INL Chemical Processing Plant (CPP). The boxes are a combination of FRPs, Sandias, and MIII/MIV bins. The boxes and bins were stacked and covered with soil and other materials on Cell 2 and a portion of Cell 3. [78]

Between 1992 and 2007, waste from offsite facilities was not shipped to the INL although waste from INL facilities was received sporadically and stored in the Type IIs at the AMWTP TSA. Beginning in 2007, AMWTP began receiving offsite waste, in addition to non-AMWTP INL waste, for characterization and/or treatment, and shipment to WIPP. [78, 185] Tables 3.1 and 3.2 identify the generator and generator prefix for offsite waste generators and non-AMWTP (respectively).

Table 3.1. Offsite waste generators.

Offsite Generators	Item Description Code (IDC) Prefix
Argonne National Laboratory – East (ANL-E)	AE
Babcock and Wilcox	BW
Battelle Columbus Laboratory	BC
Bendix-Grand Junction	BX
Bettis Atomic Power Laboratory [165]	BL
General Electric – Vallecitos Nuclear Center (GEVNC)	GV
J.C. Haynes	JH
Los Alamos National Laboratory (LANL)	LA
Lawrence Berkley National Laboratory (LBNL)	LB
Lawrence Livermore National Laboratory (LLNL)	LL
Americium Smoke Detector Site (Mexico)	MX
Monsanto-Dayton	MO
Mound Laboratory	MD
Nuclear Radiation Development	ND
Nevada National Security Site (NNSS)	NT
Oak Ridge National Laboratory (ORNL)	OR
Richland – Hanford	RL
Rocky Flats	RF
Sandia National Laboratory (SNL)	SL
Savannah River Site (SRS)	SR

Table 3.2. Non-AMWTP generators.

Non-AMWTP Generators	IDC Prefix[a]	Generator-Specific IDC Prefix alternative
Argonne National Laboratory-West (MFC)	AW	
SDA[165]/Accelerated Retrieval Project (ARP)	SD	
Idaho National Laboratory (INL)	ID	
Auxiliary Reactor Area (ARA)	ID	IA
Central Facilities Area (CFA)	ID	IF
Chemical Processing Plant (CPP)/Idaho Nuclear Technology and Engineering Center	ID	IC
Naval Reactor Facility (NRF)	ID	IN
Power Burst Facility (PBF)/INL Critical Infrastructure Test Range Complex	ID	IP
Radioactive Waste Management Complex (RWMC)	ID	IW
Test Reactor Area (TRA)	ID	IR
Test Area North (TAN)	ID	IT

a. The two-character site code "ID" is used in this report to summarize a group of subsidiary area codes with the same characteristics. Either the site code "ID" or the area codes "AW, IA, IF, IN, IP, IR, IT, or IW" may be used in WTS to identify the INL area generators.

From 1999 through 2002, approximately 3,100 cubic meters (m^3) of the RF TRU waste stored in the Type II modules, were characterized and shipped to WIPP under the INL 3,100 m^3 Project. [16, 84, 85, 86, 87, 88, 89, 90, 91, 92, 93, 94]

The main facilities inside the TSA are:

- WMF-610 Waste Characterization Building
- WMF-615 Drum Vent Facility (DVF)
- WMF-628 Characterization Building and Drum Treatment Facility (DTF)
- WMF-629 through WMF-633 Type II Storage Modules
- WMF-634 Characterization Facility
- WMF-635 Type I Storage Module and Drum Re-overpacking Facility (DRF)
- WMF-636 TSA RE; Pads 1, 2, and TSA-R
- WMF-676 AMWTF.

The AMWTP facilities covered by this report are identified in Table 3.3 with the operations and related waste generating processes/activities in each building and the report section where discussed.[6]

Table 3.3. AMWTP buildings, operations, and processes/activities associated with TRU waste generation.

Building	Operations	Process/Activity	Section
AMWTP Site Wide	3.6.2 Waste Container Handling	Container Movement and Storage	3.6.2.1
	3.6.3 Maintenance	Spill Response and Cleanup	3.6.3.5
WMF-610 Characterization Building	3.6.4 Characterization Operations	Nondestruction Examination (NDE) Activities	3.6.4.1
WMF-615 Drum Vent Facility (DVF)	3.6.2 Waste Container Handling	Drum Vent and Drum Filter Placement and Replacement	3.6.2.3
	3.6.3 Maintenance	Glovebox Glove and Bag-Out Bag Change Out	3.6.3.4
WMF-628 Drum Treatment Facility (DTF)	3.6.2 Waste Container Handling	Overpack, Un-Overpack, Relidding, Drum Liner Removal, and Confinement Layer Reduction	3.6.2.2.5
		Drum Vent and Drum Filter Placement and Replacement	3.6.2.3
	3.6.3 Maintenance	Ventilation System Pre-Filter and high-efficiency particulate air (HEPA) Filter Replacement	3.6.3.6
	3.6.4 Characterization Operations	(NDE) Activities	3.6.4.1
		Visual Examination (VE)	3.6.4.2
	3.6.5 Treatment	Liquid Absorption	3.6.5.4
		Absorption/Resorption (Shaker Table Operations) WMF-628	3.6.5.5
WMF-629—633 Type II Storage Modules	3.6.2 Waste Container Handling	Waste Container Preparation, Overpack, Un-Overpack, and Re-Overpack	3.6.2.2
		Drum Vent and Drum Filter Placement and Replacement	3.6.2.3

Building	Operations	Process/Activity	Section
WMF-634 Characterization Facility	3.6.2 Waste Container Handling	Drum Vent and Drum Filter Placement and Replacement	3.6.2.3
	3.6.3 Maintenance	Cleanout of Containment Areas including Criticality Cleanout	3.6.3.2
		Glovebox Glove and Bag-Out Bag Change Out	3.6.3.4
		Ventilation System Pre-Filter and HEPA Filter Replacement	3.6.3.6
	3.6.4 Characterization Operations	Nondestruction Examination (NDE) Activities	3.6.4.1
		VE	3.6.4.2
		Solid Sampling of Homogeneous Solid Waste S3000/S4000	3.6.4.3
WMF-635 Drum Re-Overpacking Facility (DRF).	3.6.5 Treatment	Liquid Remediation	3.6.5.3
	3.6.2 Waste Container Handling	Un-Overpacking and Re-Overpacking of S3000 Waste Drums in WMF-635 DRF	3.6.2.2.3
		Drum Vent and Drum Filter Placement and Replacement	3.6.2.3
	3.6.3 Maintenance	Ventilation System Pre-Filter and HEPA Filter Replacement	3.6.3.6
WMF-636 TSA-RE	3.6.1 Waste Container Retrieval from TSA-RE Berm	TSA-RE Berm Preparation Prior to Waste Container Retrieval (WMF-636)	3.6.1.1
		Waste Container Retrieval Operations in the TSA-RE (WMF-636)	3.6.1.2
	3.6.3 Maintenance	Ventilation System Pre-Filter and HEPA Filter Replacement	3.6.3.6

Building	Operations	Process/Activity	Section
WMF-676 AMWTF	3.6.2 Waste Container Handling	Drum Preparation in WMF-676 Drum Repack System (DRS)	3.6.2.2.2
		Confinement Layer Reduction	3.6.2.2.8
	3.6.3 Maintenance	Cleanout of Containment Areas including Criticality Cleanout	3.6.3.2
		Maintenance of Remote Controlled Demolition Robot (Brokk®) Manipulators	3.6.3.3.1
		Glovebox Glove and Bag-Out Bag Change Out	3.6.3.4
		Supercompactor Hydraulic Oil Change	3.6.3.3.2
		Ventilation System Pre-Filter and HEPA Filter Replacement	3.6.3.6
		Visual Examination (VE)	3.6.4.2
	3.6.4 Characterization Operations	(NDE) Activities	3.6.4.1
		Visual Examination (VE)	3.6.4.2
	3.6.5 Treatment	Prohibited/Nonconformance Item Removal and Treatment	3.6.5.1
		Waste/Size Reduction (WMF-676)	3.6.5.2
		Liquid Absorption	3.6.5.4
		Homogeneous Solid Waste Treatment in South Box Line	3.6.5.6

3.3 Mission

The AMWTP mission is to process TRU radioactive waste historically stored in the TSA; support cleanup through characterization/treatment and disposition of waste generated at the Idaho site; and perform characterization/treatment and disposition of waste received from other DOE sites. ITG is the primary contractor for the AMWTP. (174)

3.4 Defense and WIPP Land Withdrawal Act Determinations

3.4.1.1 Defense Evaluation

The DOE/WIPP-02-3122, Transuranic Waste Acceptance Criteria for the Waste Isolation Pilot Plant (WIPP-WAC), requires generator sites to use Acceptable Knowledge to determine if the transuranic (TRU) waste streams to be disposed at WIPP meet the definition of TRU "defense" waste. Based on guidance from the DOE, a TRU waste is eligible for disposal at WIPP if it has been generated in whole or by part one or more of the activities listed in Section

42 U.S.C. 10101(3) of the Nuclear Waste Policy Act (NWPA) of 1982. The term "atomic energy defense activity" means any activity of the Secretary (of the Department of Energy) performed in whole or in part in carrying out any of the following functions: (4, 14, 15, 180)

- Naval reactors development
- Weapons activities, including defense inertial confinement fusion
- Verification and control technology
- Defense nuclear materials production
- Defense nuclear waste and materials by-products management
- Defense nuclear materials security and safeguards and security investigations
- Defense research and development.

In accordance with interim guidance, TRU waste is eligible for disposal at WIPP if it has been generated in whole or part by one of the atomic energy defense activities identified in the Nuclear Waste Policy Act of 1982 (NWPA), and is not high-level or spent nuclear fuel (SNF). (14, 15)

Defense wastes include those wastes generated during work involving only defense activities or during work in which defense and nondefense wastes were inadvertently mixed in the past and from which the nondefense portion cannot be segregated.

3.4.1.2 Land Withdrawal Act Evaluation

Public Law 102-579, WIPP Land Withdrawal Act, prohibits the disposal of SNF and high-level waste (HLW) as defined by the NWPA at WIPP. According to the NWPA, SNF is defined as "fuel that has been withdrawn from a nuclear reactor following irradiation, the constituent elements of which have not been separated by reprocessing." (15, 181)

In addition, The DOE Radioactive Waste Management Manual expands on this definition to clarify that "Test specimens of fissionable material irradiated for research and development only, and not production of power or plutonium, may be classified as waste, and managed in accordance with the requirements of this Order when it is technically infeasible, cost prohibitive, or would increase worker exposure to separate the remaining test specimens from other contaminated material."(182)

High-level waste is defined by the NWPA as "the highly radioactive material resulting from the reprocessing of SNF, including liquid waste produced directly in reprocessing and any solid material derived from such liquid waste that contains fission products in sufficient concentrations, and other highly radioactive material that the Commission, consistent with existing law, determines by rule requires permanent isolation." (15)

The AMWTP TRU wastes are generated from contact with the existing waste materials during waste container retrieval, waste container handling, characterization, and treatment activities of defense-related waste. AMWTP newly generated waste is classified as defense-related waste and is not SNF or high level waste (HLW). If a condition occurs that a newly generated waste is not derived from defense-related waste or if waste is discovered to be SNF or HLW, it will be addressed on a case-by-case basis at that time. There is no historical record or evidence of SNF or HLW being included in the AMWTP inventory and the AMWTP does not receive SNF or HLW from non-AMWTP generators. The AMWTP does not generate SNF or HLW. (16, 17, 18, 19, 20, 21, 122, 158, 189, 190, 191, 192, 193, 194

Waste from offsite DOE and non-AMWTP INL facilities/projects received under the AMWTP Offsite Waste Program must meet the AMWTP WAC prior to acceptance. Part of the AMWTP WAC requires that the waste to be received meets the definition of defense-related wastes and prohibits the acceptance of SNF or HLW. (168) These determinations are documented by the Offsite Waste Program prior to receipt at the AMWTP for characterization, treatment (supercompaction), storage and/or shipment. AMWTP waste generated during processing of offsite wastes is also considered defense-related. (20, 95, 96)

Based on the AMWTP's AK documentation, AMWTP newly generated wastes generated from defense-related offsite generators and Non-AMWTP INL Generators listed in Table 3.1, are defense-related wastes and do not meet the definition of HLW or SNF. (4, 14, 15, 16, 17, 18, 19, 20, 21, 122, 158, 180, 181, 182, 189, 190, 191, 192, 193, 194)

3.5 AMWTP TRU Waste Management

AMWTP waste management was initiated in 2003 when the AMWTP first started operations to retrieve, characterize and treat historically stored waste from the TSA.[a] Waste management includes administrative controls to ensure that waste generated during storage, handling, waste characterization, and/or treatment of historically stored waste and waste received under the Offsite Waste Program is properly managed. With few exceptions, the AMWTP Environmental Program/Waste Services group is responsible for oversight of newly generated waste management. The AMWTP self-generated wastes generated during these activities are managed in compliance with the AMWTP Hazardous Waste Management Act/Resource Conservation and Recovery Act (HWMA/RCRA) Permit. (25, 31, 45, 97, 98, 171, 172)

Waste generated at the AMWTP that is derived from or has contacted TRU waste stored at AMWTP is managed as TRU waste until radioassay data indicate that it is not TRU. AMWTP newly generated waste is assigned an appropriate Summary Category Group (SCG), a Waste Matrix Code Group (WMCG), a Waste Matrix Code (WMC) and an item description code (IDC). (11, 31, 76) TRU programs provides oversight of the activities associated with data validation and waste stream certification requirements for all TRU waste destined for WIPP disposal.

[a] Prior to 2003, the INL RWMC managed TRU waste within the TSA.

3.5.1 Waste Identification/Categorization

Each AMWTP TRU waste is first categorized by assignment of an SCG, WMCG, and WMC based on physical form. IDCs are used to identify specific waste generated during specific operations or processes/activities. Assignments of SCGs, WMGCs, WMCs and IDCs are documented in RPT-TRUW-05, Waste Matrix Code Reference Manual. [76]

The three summary category groups identified for WIPP wastes are:

- S3000 homogeneous solids waste
- S4000 soil and/or gravel
- S5000 heterogeneous debris waste.

WMCG are assigned based on the bulk physical/chemical form (i.e., solidified inorganic, solidified organic, salt waste for S3000; soils for S4000; and lead/cadmium metal, inorganic nonmetal waste, combustible waste, graphite, filters, heterogeneous debris waste, and uncategorized metal for S5000).

WMCs are based on the expected physical form (matrix) that makes up the majority of the waste material in each container. The first position of the WMC is a letter that denotes the physical form of the waste (L for liquid, S for solid, etc.). The four-digit numerical identifiers further denote the type of waste (e.g., homogeneous solid, organic or inorganic, heterogeneous debris, soil, etc.). The DOE guidance document, DOE Waste Treatability Group Guidance, aids generating facilities in assigning WMCs to WIPP wastes.

The AMWTP generator site-specific IDCs contain the two-digit alpha generator site code, BN, and a three-digit numerical code specific for each waste. [76] Prior to WIPP profiling, AMWTP TRU wastes are assigned hazardous waste numbers (HWNs) through collaboration between Waste Services and TRU programs, based on one or more of the following: the generating process, material inputs, testing/sampling results, and AK/PK. HWN assignment is documented in hazardous waste determinations (HWDs) developed and maintained in the operating record by AMWTP Waste Services and incorporated into the AK record. TRU waste destined for disposal at WIPP is characterized on a waste stream basis as described by the WIPP WAP, the AMWTP implementing documents MP-TRUW-8.1, Certification Plan for INL Transuranic Waste; MP-TRUW-8.2, Quality Assurance Project Plan; and MP-TRUW-8.13, Collection, Review, and Management of Acceptable Knowledge Documentation. A waste stream is defined as waste materials that have common physical form, that contain similar hazardous constituents, and that are generated from a single process or activity. [1, 2, 3, 51]

3.6 Waste Generation Operations

AMWTP waste is generated during processing of TSA historically stored waste containers and waste containers received at the AMWTP from other INL and offsite DOE facilities through the AMWTP Offsite Waste Program. [6]

AMWTP operations that may generate TRU wastes include:

- Waste container retrieval from the AMWTP TSA-RE
- Waste container handling
- Maintenance activities
- Waste characterization (e.g., VE, sampling, laboratory operations)
- Treatment of TRU waste (absorption, supercompaction, etc.).

AMWTP TRU wastes generated by these operations are identified, characterized, segregated, treated, and packaged for storage and eventual offsite disposal. [6, 13] The operations that generate AMWTP waste are described in the following subsections.

3.6.1 Waste Container Retrieval from TSA-RE Berm

Waste container retrieval from the TSA-RE cells includes preparation for extraction such as sampling of the berm soil and removal of the berm covering materials as well as removal of intact waste containers (e.g., boxes and drums), contaminated surface soil, and loose waste and waste container materials. The applicable procedures used in waste container extraction are listed in Table 3.4.

Table 3.4. Operations, processes, building/area, and applicable procedures.

Operations	Processes	Building/Area	Applicable Procedures	Doc Section
3.6.1 Waste Container Retrieval from TSA-RE Berm	TSA-RE Berm Preparation	WMF-636 TSA-RE	INST-OI-23 [22] INST-EC&P-7.28.1 [24] INST-OI-24 [25]	3.6.1.1
	Waste Container Retrieval		INST-OI-09 [26] INST-OI-11 [23] INST-OI-84 [29] INST-OI-88 [30] INST-OI-100 [154] INST-OI-101 [155] INST-EC&P-7.10 [35] MP-RS&C-6.17 [75]	3.6.1.2

3.6.1.1 TSA-RE Berm Preparation Prior to Waste Container Retrieval (WMF-636)

Samples are collected from the overburden, side burden, firebreaks, and interstitial soil on the TSA pads in preparation of removal of the soil and other covering material to expose the waste containers for retrieval. Discrete soil samples are collected using hand augers, and sent for

analyses of radionuclide contamination and RCRA hazardous constituents; volatile organic compounds (VOCs), semivolatile organic compounds (SVOCs), other organic compounds (e.g., total petroleum hydrocarbons), polychlorinated biphenyl (PCBs), metals and inorganic compounds. [22, 24]

After sample analysis, the side burden and top soil as well as plywood and other covering materials are removed from around the waste containers.

3.6.1.1.1 Soil Removal

Small loaders, compact excavators and manual methods (e.g., shovels) are used to remove berm soil from around the buried waste containers. Clean soil is removed to a dump truck using a front end loader, and the soil is transported to a disposal area. Soil with staining or suspected contamination is packaged into waste containers per applicable AMWTP procedures (e.g., INST-OI-24, Packaging Radioactive Waste). [22, 25]

Soil is monitored during soil removal operations and radiologically contaminated soil is monitored by Industrial Safety/Industrial Hygiene (IS/IH) for VOCs contamination and packaged per applicable AMWTP procedures (e.g., INST-OI-24). [22, 25]

3.6.1.1.2 Plywood and Other Covering Materials Removal

Plywood sheets and tarps or other covering materials were used to cover the waste containers in the TSA-RE berm areas and are also removed during berm preparation. Plywood sheeting was placed between the layers of drums in the TSA-RE storage for stabilizing the stacked drums. Containers were also covered by tarps and other materials to impede soil and water from infiltrating the stacks. [22]

At or near the dig face, miscellaneous materials, tarp, plastic, and or plywood are inspected for damage or staining. Staining is used as an indicator that the tarps and other covering materials may be considered hazardous or mixed waste. Staining may be indicated by light shadows, slight streaks, or minor discolorations. Whenever possible, contaminated or stained materials are separated from clean materials to support waste minimization. [22]

Materials from the berm removed during preparation for container retrieval are also surveyed by Radiological Technician (RT) and Industrial Hygienist (IH) and segregated based on radiological and chemical contamination. As the drums are removed from the stacks, the interstitial plywood is removed and inspected for contamination. [22]

3.6.1.2 Waste Container Retrieval Operations in the TSA-RE (WMF-636)

After the soil and other covering materials are removed, waste containers are extracted from the TSA-RE WMF-636 storage pads. Prior to physically removing the containers from the Pads 1 and 2 waste stacks, an initial large area wipe is taken and counted for radiological contamination values. Areas of suspect hazardous constituent contamination on the external portion of containers are painted or wrapped to seal the hazardous constituents. The container to

be retrieved is visually inspected for staining or damage that would preclude its retrieval or require immediate overpacking. Waste container retrieval operations conducted on Pad 1, Cells 1 and 2 utilize the Retrieval Contamination Enclosure (RCE) and the Inner Contamination Enclosure (ICE) for staging, inspection, decontamination, and repairing/overpacking.[12, 23, 26, 29, 154, 155]

Cargo containers and bins were retrieved from Pad R beginning in 2009. The soil and other covering materials were removed from around the stored containers as described previously (Section 3.6.1.1). Each cargo container and bin was evaluated to obtain its historical identification number and the probability (high or low) of containing one or more inner drum(s) of roaster oxide. Inner containers (e.g., 30-gallon, 55-gallon and 83/85-gallon drums and wooden boxes) extracted from each cargo container are overpacked, as needed. The surfaces of retrieved/extracted containers are cleared of residual soil and debris; surveyed (radiological), inspected, and labeled. Each container is visually examined to determine historical data (e.g., generator, IDC, pack date). The retrieved/extracted waste containers are stored in stacks in the TSA-RE, based on the type of waste and container size. Retrieved drums/containers/packages smaller than a 55-gallon drum are overpacked into 55-gallon or larger drums or boxes.

Containers extracted from cargo containers or those retrieved from the bermed pads with poor integrity or that are breached or have other structural defects are overpacked or repaired to the extent possible, as described in the following Sections. [12, 23, 26, 29, 154, 155]

3.6.1.2.1 Container Integrity

Containers with questionable physical integrity are required to be placed into secondary containment and undergo repair prior to additional handling or transfer out of the TSA-RE. Questionable physical integrity is defined as containers with areas of suspect hazardous constituent contamination on the exterior, structural defects (e.g., physical degradation, excessive rust), breached containers (e.g., holes, splits that may release contamination), and bulging containers. [26, 155]

The primary action is to repair container integrity deficiencies (e.g., breaches, structural defects) to the extent possible without overpacking the container except for solid waste matrix drums (sludge drums). Damaged or stained TRU waste containers are evaluated based on radiological and IH conditions, and managed as follows: [29, 155]

- Breached TRU debris waste containers may be repaired or overpacked.
- Wooden containers with areas of suspect hazardous constituent contamination on the external portion are painted to seal the hazardous constituents to the container. [26]
- Breached containers of solid waste matrix (sludge drums) are not repaired, but overpacked. [26]

- Bulging waste containers are handled only with supervision. The recommended sequence is retrieval, place on a cradle or turntable, set the container upright using the drum tipper, install a lid restraint; and segregate the container until it can be vented. (26)

- Dropped, mishandled and/or breached waste containers are evaluated, and overpacked, repaired, or processed as necessary.

3.6.1.2.2 Loose Waste

Loose waste materials identified during retrieval activities are isolated and evaluated to determine the source and type of the material, the extent of the release, and presence of hazardous material. Loose waste may be found on the TSA pads, in cargo containers and bins. (26, 30, 35, 154, 155)

Loose waste material is recovered using appropriate tools (e.g., vacuums, scoop, brush, and/or shovel). If the entire container is compromised, the original packaging materials and pieces of the original drum are included in the new container. (26, 30, 35, 75)

The recovered materials are packaged into new Department of Transportation (DOT) 7A Type A-approved waste drums (e.g., 55-gallon, 83/85-gallon, 100-gallon) or boxes to contain less than 380 FGE ^{239}Pu per container. Containers are filled and assigned the total fissile content of all parent containers from which the material originated. If the parent container(s) is unknown, it is assumed to contain less than 200 FGE ^{239}Pu for collector drums and less than 325 FGE ^{239}Pu for collector boxes. (25, 30, 35, 75, 154, 155)

Waste materials determined to contain PCB, beryllium and/or acute hazardous waste have special requirements for handling and packaging. IS/IH is consulted to determine the need for sampling for beryllium or other contaminates of concern. (30)

Spilled material or leaked liquid clean up is covered by INST-OI-88, Spill/Leak Response and Cleanup and if applicable under MP-EC&P-7.10, Spill Response Procedure, as described in detail in Section 3.6.3.5.

3.6.2 Waste Container Handling

TRU waste container handling involves movement and management of waste containers (e.g., drums, boxes, and bags or plastic wrapped materials) around the AMWTP TSA. Waste container handling includes, placing containers in storage, container preparation (e.g., un-overpacking, overpacking), drum liner removal and liner repack, re-lidding, confinement layer reduction, and drum venting. (23) The applicable procedures and locations for waste container handling operations are listed in the Table 3.5. (23)

Table 3.5. Waste container handling operations, processes, buildings/areas, and applicable procedures.

Operations	Processes	Building/Area	Applicable Procedures	Doc Section
3.6.2 Waste Container Handling	Container Movement and Storage	Site Wide	INST-OI-11 [23]	3.6.2.1
	Waste Container Preparation, Overpack, Un-Overpack, and Re-overpack	WMF-629 WMF-630 WMF-635 DRF WMF-676 DRS	INST-FOI-21 [27] INST-FOI-23 [32] INST-OI-84 [29] INST-OI-80 [49] INST-OI-91 [50] INST-OI-65 [161]	3.6.2.2
	Overpack/Un-overpack, Re-lidding, Drum Liner Removal and Liner Repack, Confinement Layer Reduction	WMF-628 (DTF) WMF-676	INST-OI-68 [38] INST-FOI-16 [37]	3.6.2.2.5 3.6.5.2
	Drum Vent and Drum Filter Placement and Replacement	Type II modules WMF-628 WMF-634 DVS WMF-635 WMF-615 DVF	INST-OI-09 [26] INST-FOI-21 [27] INST-OI-45 [52] INST-OI-50 [53] INST-OI-92 [54] INST-OI-43 [48] CCP-TP-082 [80]	3.6.2.3

3.6.2.1 Container Movement and Storage

Retrievably stored waste containers are transported to and removed from RCRA storage units to maintain compliance with the AMWTP Site RCRA permit and to meet AMWTP offsite milestones/commitments. Primary movements are in support of operational activities relating to characterization, treatment, and offsite shipment. [23, 170]

Waste drums (55-, 85-, and 100-gallon) and boxes are stacked in storage areas in the Type I and Type II storage modules, in storage areas in the TSA-RE and in the facility WMF-676. Storage configuration is based on container size, and weight and drum conditions. Drums are stacked in rows with plywood sheets placed between drums layers for stabilization. [23]

All pyrophoric waste containers are stored in a designated pyrophoric materials storage area. [23]

A mobile crane may be used in the Type II modules to move containers (e.g., MIII/MIV bins). Sandia boxes are moved using the Sandia Lift Fixture. A clamshell lifting attachment may be used in lieu of a Parrot Beak Handler for an out-of-round container. [23]

Boxes with runner/stringers or cribbing are considered elevated and may be stored directly on the floor of Pad 1 or Pad. R. All boxes stored on Pad 2 must be elevated on pallets. Secondary containment is required if a container contains liquids or has questionable container integrity. [23]

A single rear axle dual-wheeled flat bed truck is used to move containers within WMF-636. Individual drums or boxes are moved with a forklift and/or all terrain extend-a-boom forklift to lift the containers onto the flat bed or to move containers within a building. Waste containers are inspected for structural soundness prior to movement. [23]

3.6.2.2 Waste Container Preparation, Overpack, Un-Overpack, and Re-Overpack

Waste container preparation and handling is conducted in the WMF-676 DRS, the WMF-635 DRF, and in the Type II modules as described in the following sections. The specific handling described includes preparation of containers for VE, overpacking or treatment, and overpacking, un-overpacking, and re-overpacking of containers with structural defects in support of safety and spill prevention programs. Overpacking includes drums packed into virtual drum overpacks (VDOPs) (e.g., six-drum overpack [SDOP], eight-drum metal overpack pallet [EMOP], six-drum metal overpack pallet [SMOPs]) for movement of waste from the Type II storage modules to the facility. Each facility handles specific types of waste containers and/or waste receiving containers depending on function and location. [27, 29, 32, 49, 50, 82, 164]

3.6.2.2.1 Loading Virtual Drum Overpacks

Debris waste containers greater than 55-gallon or with poor container integrity or structural defects are overpacked into virtual boxes or placed on pallets (SDOPs, SMOPs, and EMOPs) for transfer into a box line. The waste containers are loaded into the VDOPs in Type-II modules (e.g., WMF-629 and WMF-630). All drums to be packed into a VDOP are first verified to contain less than or equal to 200 FGE and linked to the VDOP in the Waste Tracking System (WTS). The containers are dumped from the VDOP into the box line trough where they are opened, prohibited items (PI) are removed or treated, and the remaining waste is packed into 55-gallon silver drums. The waste drums are moved via a conveyor to an assay station and into the Supercompactor for compaction. [29, 34, 37, 164]

3.6.2.2.2 Drum Preparation in WMF-676 DRS

The DRS consists of the Drummed Waste Handling Enclosure (DWHE) room, the Drum Opening Hood Enclosure (DOHE), which includes the Drum Opening Station (DOS), and the Drummed Waste Packaging Glovebox (DWPG). Drummed TRU waste is prepared in the DOHE/DOS prior to entry into the DWPG for VE, PI removal or treatment, and repackaging prior to entry into the Supercompactor. Drum preparation includes lid removal and opening of the drum liner. Containers and uncontainerized waste are considered to be in treatment at all times in the DWHE, DWPG, and special case waste (SCW) glovebox system. Prohibited items may be removed from containers in the DWPG and treated in the SCW glovebox. [27, 32, 82]

Overpack drums (83/85-gallon) may be prepared in the DOHE prior to un-overpacking the inner 55-gallon drum, which involves moving the overpack container into the DOS, and removing the lid and locking ring. The inner 55-gallon drum is lifted from the overpack in the DOS, surveyed for radiological contamination and inspected during lifting. The unpacked 55-gallon drum is placed on the floor or on the dolly for later handling. [27, 32]

Waste containers exit the DRS area either through the System 423 lift (for assay and supercompaction) or through the DWPG for VE and/or repackaging. [27, 32]

3.6.2.2.3 Un-Overpacking and Re-Overpacking of S3000 Waste Drums in WMF-635 DRF

Un-overpacking and re-overpacking in the WMF-635 DRF tent is limited to S3000 TRU waste containers. This excludes the organic homogeneous wastes (IDCs RF-003, RF-700, and RF-801). [50] Overpacked S3000 waste drums that have poor container integrity or cannot be treated in WMF-628 are moved into the DRF tent and prepared for overpacking into an SWB for shipment to WIPP. Filter vents, locking rings and lids are removed from the overpack drums and set aside for disposal into a prepared waste container. Vented inner containers (30-gallon or 55-gallon) are lifted from the overpack and inspected for container integrity. Intact drums are staged in the DRF on an appropriate pallet or dolly or directly loaded into a prepared SWB. Breached waste containers or those with poor integrity are not retrieved from their overpack containers and are returned for storage. [50, 82, 161, 162, 163]

The empty 83/85-gallon drums are inspected to determine the presence of waste material. Any waste material is removed and bagged. Liquid waste is absorbed with an approved absorbent (e.g., Aquaset II-G® and Micro-Cel® E) placed into a poly bag. The bagged waste from the empty container is disposed of in the SWB with the parent waste. The lid and locking ring and a new vent are reinstalled on the empty overpack container, which is then crushed using the drum crusher and loaded into a waste box. [50, 161]

3.6.2.2.4 Un-Overpacking of Boxed Waste Containers in WMF-629

Large overpack TRU containers such as TX-4 and cakeboxes are un-overpacked in WMF-629. Forklifts and attachments used to move these boxes are covered to reduce the possibility for cross contamination, as applicable. Box lids are removed and cribbing (e.g., plastic/herculite sheeting and cribbing) is installed to allow radiological surveys as needed. Removed box lids are placed on plastic/herculite sheeting to prevent cross contamination. To process the unpacked waste boxes to RCRA empty status, all waste (e.g., lid gaskets, inner bags, etc.) is removed from the container; the container is reassembled (e.g., re-install bolts, cargo tape is applied to lid and box seam as applicable), the exterior is surveyed, and the container is decontaminated as appropriate. (49)

When a breached waste container is found, and conditions permit, the container and the area are decontaminated and the container is overpacked or repaired and placed back into storage. Areas of suspected contamination on the external portion of containers are painted or covered to seal the constituents to the container. (49)

3.6.2.2.5 Overpack, Un-Overpack, Relidding, Drum Liner Removal, and Confinement Layer Reduction

The WMF-628 DTF activities include overpacking/un-overpacking, and relidding, and drum liner removal of S3000, S4000 and S5000 TRU waste and reduction of the layers of confinement of S3000 and S4000 waste. (38)

3.6.2.2.6 Overpack, Un-Overpack, and Relidding

Overpacking is performed on drums received into the DTF if the drum is damaged where it cannot be stored. The drum is lifted out of the overpack and placed into a new 83/85-gallon drum, lidded with a vented lid, and closed with a locking ring bolt. (38)

Overpack 83-gallon drums of S3000 and S4000 waste containers taken into the DTF are first un-overpacked. Overpacked S5000 waste is also un-overpacked in the DTF as necessary. After removal of the lid from the overpack, the inner container is lifted, monitored for structural integrity, radiologically surveyed, and decontaminated as necessary. Emptied overpack drums are evaluated to determine if RCRA empty and dispositioned accordingly. (38)

The filter vent and lid locking ring are then removed from the un-overpacked 55-gallon drums. The interior of the container is radiologically surveyed prior to complete removal of the drum lid. Waste container lids with excessive rust or that cannot be reinstalled on a drum due to warping or other structural issues are replaced with new lids and ring that are compatible with the container. A new filter vent is installed and the drum is closed. (38)

If the container requires absorption or remediation, the procedure is described in Section 3.6.5.2 (160) or 3.6.5.3. (38)

3.6.2.2.7 Drum Liner Removal and Liner Repack

Drums of S3000 and S4000 waste with container integrity issues require drum liner removal and liner repack prior to shipment to WIPP or treatment on the shaker table. Removal of rigid drum liners involves first removing the liner lid or cutting slots out of the liner lid to facilitate removal of the liner. When the liner lid is removed, a confinement method is used to contain the waste in the liner (e.g., application of a shower cap). Liners are raised above the source drum (55-gallon), decontaminated as needed, surveyed for radiological contamination and structural integrity, and the liner containing the waste is placed into a new 55-gallon container. [38]

In the event the rigid liner cannot be removed from the drum, the liner is lowered back into the original drum, the liner lid replaced or repaired, and the container is banded, relidded, vented and overpacked. Drum liners that are successfully removed from the original drum but cannot be repackaged into a 55-gallon drum are packed into a soft-sided overpack and overpacked into an 83/85-gallon overpack. [38]

3.6.2.2.8 Confinement Layer Reduction

Layers of confinement in S3000 and S4000 waste containers are breached during treatment for liquids and during PI removal. The rigid liner lids are cut out or removed; concrete cap materials are broken up and left in the container or placed into waste bags for return to the treatment drum after treatment, and layers of bagging are cut open and the bag umbilical(s) removed. The removed packaging materials are placed back into the treatment drum along with any secondary waste items generated after treatment is completed, if there is sufficient space in the container. [38]

All layers of confinement in S5000 waste containers are breached as an integral part of treatment during removal of waste from containers in the box lines and supercompaction (Section 3.6.5.2.2). [34, 37]

3.6.2.3 Drum Vent and Drum Filter Placement and Replacement

TRU waste containers are vented prior to characterization or movement of containers into the WMF-676 Facility. Installation of drum vents or ports and filter removal and replacement are conducted in the Type II modules (i.e., WMF-629 through WMF-633), WMF-628, WMF-634 and WMF-635 and in the DVF (WMF-615). Drum lids are wiped as needed prior to vent/port or filter insertion. The drums are remotely punched, a vent, port or filter is inserted, and the drum is discharged. The top of each drum is swiped for a contamination survey and the swipe is scanned prior to removal of the drum from the area. [26, 52, 53]

- Drums requiring WAC headspace gas sampling that have nonpenetrable filter media are moved to the Headspace Gas (HSG) filter change out hood or the SUMMA sampling filter change out area (WMF-628). Drums requiring WAP headspace gas sampling that require a filter replacement are conducted in WMF-634. The container filter is removed and discarded as

radiological waste, the gasket seating surface is cleaned as appropriate, and an appropriate container filter is installed. [48, 54, 80]

- Drum lids with excessive corrosion are replaced prior to installation of the drum filter. Drums with dents, imperfections or existing filters that interfere with the seal housing, are repositioned or the drum lid is replaced. [52]

- Drum filter removal and replacement for TRU waste drums is monitored using a photoionization detector (PID) and a high-efficiency particulate air (HEPA) filter vacuum to remove any drum filings resulting from the removal process, or other material from the drum surface. Current drum filters are removed from the drum and disposed of based on radiological contamination and an appropriate filter is installed. The container is surveyed by a radiological control technician (RCT). Containers with survey results in excess of acceptable limits require decontamination, containment, or affixing of the contamination. [48, 54]

- Drums retrieved from Pad R, Cell 1 cargo containers and bins identified as RF-751 or unidentified homogeneous solid waste are not vented prior to real-time radiography (RTR) examination due to the potential presence of depleted uranium (roaster oxide). [52, 53]

- Whenever a new lid or an old lid is installed onto a waste drum, a new filter vent is installed. [27]

3.6.3 Maintenance

Maintenance includes equipment maintenance (e.g., oil change outs and equipment change outs), as well as cleanout of containment areas (e.g., Drum Repack System, box lines), periodic replacement of glovebox gloves and ports, spill response and clean up, and replacement of ventilation system filters. These maintenance activities occur across the AMWTP to support overall operations and criticality concerns. The applicable procedures and locations for maintenance operation are listed in Table 3.6.

Table 3.6. Maintenance operations, processes, buildings/areas, and applicable procedures.

Operations	Processes	Building/Area	Applicable Procedures	Doc Section
.6.3 Maintenance	Cleanout of Containment Areas	WMF-615 DVF WMF-634 DVS WMF-676 DRS WMF-676 Box lines WMF-676 SCW	INST-OI-16 (65) INST-OI-73 (66) INST-FOI-21 (27) INST-FOI-16 (37) INST-FOI-23 (32) INST-FOI-28 (151) INST-FOI-37 (153) RPT-ESH-079 (150)	3.6.3.2
		WMF-676 Supercompactor	INST-FOI-20 (34)	3.6.5.2
	Equipment Maintenance	WMF-676	INST-FOI-36 (152) INST-MS-0111 (68) INST-MS-0049 (79)	3.6.3.3
	Glovebox Glove and Bag Support Ring Change out	WMF-615 WMF-676 WMF-634	INST-OI-16 (37) INST-FOI-21 (27) INST-FOI-23 (32)	3.6.3.4
	Spill Response and Clean up	Site Wide	INST-OI-11 (23) INST-OI-88 (30) INST-EC&P-7.10 (35) INST-FOI-25 (39)	3.6.3.5
	Ventilation System Pre-filter and HEPA Filter Replacement	WMF-628 WMF-635 WMF-676 WMF-636 Vacuums and portable exhausters WMF-615 WMF-634 WMF-636	MP-EC&P-7.4 (56) INST-FOI-34 (55) INST-MI-1001 (59) INST-MI-1082 (60) INST-MI-1051 (58) INST-MI-1070 (57) INST-OI-91 (50) MP-RS&C-6.17 (75)	3.6.3.6

3.6.3.2 Cleanout of Containment Areas including Criticality Cleanout

Regular cleanout of containment areas (WMF-634 Drum Core Sample Retrieval System [DCSRS], WMF-676 DRS, and WMF-676 north and south box lines) is conducted to prevent criticality situations and prior to receiving known incompatible waste (i.e., waste coming in is incompatible with previously processed waste). Cleanout of the Supercompactor glovebox suite is described in Supercompaction Section 3.6.5.2.2.1. [32, 37, 65]

3.6.3.2.1 WMF-634 DCSRS Cleanout

Cleanout of the DCSRS glovebox is performed after a sampling event is complete. The glovebox is cleaned out by returning residual core material, packaging material (e.g., plastic, absorbents removed and set aside prior to sampling), and any secondary waste generated to the source container. In the event the source container does not have sufficient headspace to accommodate the waste materials, they are packaged separately from all other waste in the glovebox per applicable AMWTP procedures (e.g., INST-OI-24). [65, 66]

The coring tools, equipment and the three sections of the glovebox are wiped down to a visibly clean condition. Waste packages are transferred to the bag-out port and bagged out of the glovebox and placed into a collector drum. The drum is removed from the drum port and surveyed. Trapped air from the drum transfer sleeve is removed using a HEPA-filtered vacuum and the top lip of the drum is taped over the drum transfer sleeve. A VE is performed during final closure of the drum. A drum lid with an installed bung-type filter vent is placed on the drum, and a drum lid locking ring and filter vent are installed. [65, 66]

3.6.3.2.2 WMF-676 Drum Repack System Criticality Cleanout

The DWHE, DOHE, and DWPG are considered a single area (DRS) for criticality cleanout and are all cleaned before resetting the FGE totals in the Fuel Tracking System (FTS). Cleanout of the DRS includes emptying any container (including vacuums) that are not labeled and specifically controlled "For nonfissile materials ONLY" and removal of drums within the area that do not form part of the area mass limit (e.g., lidded SCW drums). [27, 32]

The DRS is visually inspected to provide a means of achieving criticality control by ensuring "clumps" of contamination are not present. Items used for cleanout, such as wipes used for cleaning contamination off the inside of a glovebox, are collected into the same container as waste and are treated as part of the "clump" volume. Following a criticality cleanout and inspection, less than 1,000 cm^3 (approximately a quart bottle) of contamination may be left in a glovebox. Waste items (e.g., personal protective equipment (PPE) are inspected to verify contamination level before being bagged from the DOHE and bulked into a 55-gallon drum and assayed to control the fissile mass within a drum to below the 200 FGE ^{239}Pu WAC. Waste containers exit the DRS area either through the system lift (for assay and supercompaction), through the DWPG (for VE and/or repackaging), or are transferred to the SCW glovebox for treatment. [27, 32]

3.6.3.2.3 WMF-676 Special Case Waste Criticality Cleanout

The WMF-676 SCW glovebox system is composed of 4 interconnected gloveboxes; (1) transfer, (2) treatment, (3) sampling, and (4) container-in-container gloveboxes. The SCW gloveboxes and secondary waste items are visually inspected for significant quantities of contamination to determine that such quantities ("clumps" of contamination) are not present as a means of achieving criticality control. Cleanout of the SCW glovebox includes removing any waste material and secondary waste items and wiping the inside of the glovebox to remove contamination. Items used for cleaning contaminated material from the glovebox (e.g., wipes) are treated as part of the "clump" volume of waste material removed. Following a criticality cleanout and inspection, less than 1,000 cm^3 (approximately a quart bottle) of contamination may be left in a glovebox. [32]

3.6.3.2.4 Box Lines and Containment Systems Cleanout

Criticality cleanout of the box lines and containment systems is initiated based on radiological contamination. Cleaning includes the area inside each box line room (229B [north box line] and 228B [south box line], second floor zone 3 enclosures), including troughs, windows, crane maintenance, PAR maintenance, mezzanines above east and west suite change rooms, and conveyors. Enclosure cleanouts shall be periodically (at least quarterly) cleaned of extraneous materials (e.g., paint chips, wood chips, debris) to minimize the collection of waste materials. [37, 151, 153]

Liquids present in the box line troughs are removed, either by absorption, or using a portable sump pump during cleanout. Loose waste materials are placed in bags and removed from the troughs and placed in staged 55-gallon silver drums for supercompaction. All surfaces are visually inspected to ensure all incompatible waste material has been removed from the box line areas. The trough and containment surfaces are swept with the Brokk® tool to remove any excess material and contamination. Wipes and other materials used during the cleanout are included with any waste material removed. [37]

Spills of potential PCB contaminated waste in the facility box line are cleaned per the PCB management plan. An Environmental Representative will develop a written plan for the cleanup and confirmation sampling of the area. The area will be cleaned using a double/wash rinse methodology. After the PCB-contaminated surface has been cleaned, a series of surrogate swipes (100 square centimeter swipes) will be collected. The surrogate swipes will be collected in a manner to represent the entire surface area of the PCB cleanup. The swipes will then be surveyed for radionuclide activity to determine the alpha contamination remaining on the cleaned surface. The radiological swipe results will be compared to an alpha surrogate swipe threshold to determine if the area has been adequately cleaned for PCBs. If the alpha swipes are equal to or below the acceptable threshold level of 26,000 dpm, the area will be deemed adequately cleaned and can return to normal operations. However, if the alpha swipes are above the acceptable surrogate swipe threshold level, the PCB-contaminated surface will be cleaned again using the double wash/rinse method. The area will continue to be cleaned using this methodology until the alpha swipe samples show that the area has been cleaned to levels below the acceptable surrogate swipe threshold. The acceptable alpha surrogate swipe threshold, the level used to determine if a

PCB-contaminated area has been adequately cleaned, has been set at 26,000 disintegrations per minute (dpm). [150]

Following criticality cleanout and inspection, less than 3,000 cm^3 (approximately the size of a soccer ball) of waste is allowed to remain in the respective box line trough. Insignificantly contaminated items (e.g., metal shelving or wood from the waste box) may remain in the box line after a cleanout. [37]

Cleanup of *holdup* material is conducted in the following systems:

- System 335, North Box Line Conveying and Drum Fill—Room 125B
- System 345, South Box Line Conveying and Drum Fill—Room 124B
- System 390, Facility Drum Assay Conveyor Area—Room 126C.

3.6.3.3 Equipment Maintenance

Holdup material consists of debris and dust that collects on surfaces within the area of box line processing in the facility. The debris and dust are collected separately from the surfaces and packaged according to INST-FOI-28. [151]

Standardized maintenance procedures are used at AMWTP. Maintenance is performed with services, drives, and electrical power isolated and AMWTP personnel using appropriate PPE. [42]

Modular units within WMF-676 (such as manipulators) are typically maintained/repaired in designated areas near where they are used, or they can be removed from the area on failure and taken to the contaminated maintenance cell for repair. Any failed or uneconomical-to-repair components originating from within Zone 3 areas (e.g., waste tools used in box lines or gloveboxes) are bagged out of the area, collected in containers or added to the box line waste as feedstock. [34, 37]

3.6.3.3.1 Maintenance of Brokk® Manipulators

Changing the hydraulic fluid (i.e., QuintoLubric 822-300 hydraulic fluid) from the Brokk® pedestals is performed on a quarterly basis as part of routine maintenance. [74] Three Brokk® floor-mounted manipulators are installed in the two box line cells located in WMF-676. The Brokks® are hydraulically driven, remotely operated, and are situated in highly contaminated cells. They are primarily used to sort, segregate, and size-reduce waste and waste containers dumped from boxes into the two box line troughs. [74, 79]

To remove the Brokk® manipulator oil, the oil and any sludge is pumped, drained or dipped from the equipment and the waste is placed into accumulation containers (e.g., polyethylene containers or 55-gallon drums). The polyethylene containers are double-bagged from the room prior to removal from the area. The equipment is inspected; breather filters are replaced, minor leaks are repaired as needed, and the oil is replaced. The

drained oil is placed into waste containers with absorbent material. When the waste container is full or all oil has been drained, the waste container is closed and stored until disposal is determined. [79, 152]

3.6.3.3.2 Supercompactor Hydraulic Oil Change

Periodic cleanout of the Supercompactor includes changing the hydraulic oil, inspection of the oil reservoir, replacement of breather filters, repair of any minor leaks, performing a functional check of the reservoir level indicator, and a flow measurement of the hydraulic power unit (HPU) chilled water and other maintenance as needed. [68]

During oil change, the Supercompactor reservoir is completely drained, and the reservoir is inspected and cleaned. Cleaning includes wiping off any suspended oil on the walls of the reservoir using reach tools; removing oil from the bottom of the reservoir using a squeegee and lint-free rags or a vacuum. A plastic scraper on an extension pole or other nonmetal device is used to remove any sludge remaining on the reservoir floor. After cleaning, the reservoir is re-inspected to ensure no foreign matter or objects are present. A new O-ring is installed and the cover is put back on the reservoir and the oil is replaced with QuintoLubric oil. [68, 70, 74, 99]

The drained oil is placed into a waste drum. When the waste drum is filled or all oil has been drained the waste drum is closed and stored until disposal is determined. When all of the operations have been performed, the Supercompactor is refilled with prefiltered QuintoLubric oil and put back into operations. [68, 99]

3.6.3.4 Glovebox Glove and Bag-Out Bag Change Out

Glovebox gloves (e.g., coring, DRS, SCW, DVS, DVF gloveboxes) are inspected daily or before use for wear and tear. Gloves that fail an inspection are changed at the time of the failure or when the inspection date has expired. The glove and the rubber O-ring from the glove support ring are removed, bagged-out of the area, and placed into a waste collection container. [27, 32, 37, 65, 66, 67]

Bag-out bags including support rings are also inspected daily. Those that fail inspection are replaced. New O-rings and bag support ring are installed over the replacement bag-out bag. The previous bag is rolled up completely and placed into the inner housing of the ejection tool with the bag ring on the open end and removed. During installation of the replacement bag, the bag support ring and bag stub are disengaged from the enclosure ring into the inside of the glovebox to be bagged out of the glovebox after installation is completed. [27, 32, 37, 65, 66, 67]

3.6.3.5 Spill Response and Clean Up

Spills from breached containers results in spill response actions. Actions to be taken for spill/leak cleanup of liquid or solid waste materials are dependent on the waste type, radionuclide content and extent of the spill, leak, or release. Spill areas are isolated when necessary to protect others and to keep spill material from spreading. The spill/leak area is evaluated by the Environmental personnel, and characterization/cleanup activities are determined. All decisions

and activities are documented appropriately. Released material is tested and recovered based on testing results into collection drum(s). It is managed as TRU waste until assayed to determine the level of radionuclide contamination. Spills due to a container leak or breach or a release of any hazardous or radiological material at the AMWTP are reported to the Environmental group. (23, 25, 30, 35, 45)

- PCB, beryllium, and acute hazardous waste releases have specific requirements (e.g., PPE) for cleanup/handling and packaging. The leaked/spilled material is tested (e.g., pH) and packaged into a collector drum and stored for future evaluation and disposition. Each collector drum is controlled to less than 200 FGE ^{239}Pu. (30, 35, 150)

- When there is a spill or leak from a non-PCB/Be contaminated waste container, appropriate PPE is donned, leaked/spilled material is tested (e.g., pH) as necessary, and spilled material is recovered and placed into either 55-gallon drums or boxes. The resulting waste is managed as TRU waste until assayed. (30, 71)

- Any spillage of fissile waste material is recovered at the earliest practical opportunity, using INST-OI-88, Spill/Leak Response and Cleanup. (30) Any container produced as a result of the recovery from a spillage is assayed. (39, 71)

- Dry materials may be removed by vacuum. Leaked/spilled material is picked up or absorbed using appropriate tools (vacuums, scoop, brush, and/or shovel). (30)

- Liquids are cleaned up with the use of appropriate absorbent material over the leaked/spilled material. When absorbed the material is picked up. The area of the spill/leak is wiped up to remove excess. (30)

The types of absorbent materials used during spill cleanup are based on characterization data and determination of the nature of any liquids present. Approved absorbents are Aquaset®, Aquaset II-G®, Micro-Cel® E, SP-400®, Oil Dri® (i.e., historical use only), Hg Absorb, Petroset II® and Petroset II-G® as well as absorbent PIG® mats or towels. The spill cleanup materials are placed in appropriate waste receptacles and stored in a Temporary Accumulation Area (TAA). (23, 25, 30, 35, 45, 163, 175 176, 177, 178)

The Box Line Polychlorinated Biphenyl (PCB) Management Plan establishes guidelines for the cleanup of PCBs that inadvertently enter the AMWTF box lines. The use of these guidelines prevents non-PCB waste processed in the Box Lines from becoming contaminated with PCBs at concentrations above 50 ppm. Upon discovery of potential PCB-contamination on a surface within the AMWTF box lines, the area will be shut down. An Environmental Representative will develop a written plan for the cleanup and confirmation sampling of the area. The area will be cleaned using a double/wash rinse methodology. After the PCB contaminated surface has been cleaned, a series of surrogate swipes (100 square centimeter swipes) will be collected. The surrogate swipes will be collected in a manner to represent the entire surface area of the PCB cleanup. The swipes will then be surveyed for radionuclide activity to determine the alpha contamination remaining on the cleaned surface. The radiological swipe results will be compared to an alpha surrogate swipe threshold to determine if the area has been adequately cleaned for PCBs. If the alpha swipes are equal to or below the acceptable threshold level of

26,000 dpm, the area will be deemed adequately cleaned and can return to normal operations. However, if the alpha swipes are above the acceptable surrogate swipe threshold level, the PCB contaminated surface will be cleaned again using the double wash/rinse method. The area will continue to be cleaned using this methodology until the alpha swipe samples show that the area has been cleaned to levels below the acceptable surrogate swipe threshold. (150)

3.6.3.6 Ventilation System Pre-Filter and HEPA Filter Replacement

Pre-filters and HEPA filters from multiple ventilation systems and filtered equipment (e.g., gloveboxes, the shredder area, DRF, DTF, vacuum cleaners) are replaced on a periodic or as needed basis. All HEPA filter/pre-filter replacement is bag-in-bag-out, which allows filter change from the exterior of the filter housing without exposing personnel to the contents of the spent filter. (59)

When a HEPA filter or HEPA filter bank falls below 99.97% efficiency as determined by testing, the filters are isolated and replaced within 10 days. (56, 57, 58, 60) Ventilation areas are defined as Zone 1, Zone 2, and Zone 3 areas based on the environments serviced. Zone 1 areas are served by a singled bank of HEPA filters and Zone 2 areas are served by two stages of HEPA filtration. The Zone 1 and 2 exhaust systems areas are combined downstream of the filters and routed to a common duct to the main stack. Zone 3 filtration areas are served by three stages of HEPA filters. The first-stage filter is located near the areas served and the exhaust passes through the second- and third-stage HEPA filter banks before being exhausted through the main stack. The glovebox exhaust system serves gloveboxes with Zone 3 environments and is similar to the Zone 3 exhaust system, except that the flow rate requirements are much lower. This system also has first-stage HEPA banks followed by second- and third-stage HEPA filter banks. (13)

Ventilation systems are present in the following areas:

- Characterization facilities (WMF-610, WMF-615, WMF-628, WMF-634) ventilation consists of a general exhaust for the building plus special-purpose exhaust systems in the drum venting system(s) and drum core sampling area. Drum venting includes a vapor extraction system to evacuate headspace gases of drums, and a multistage HEPA filtered exhaust system. (13) These are Zone 2 areas.

- The outside of soft-sided containment (tents) are Zone 2 areas. (60)

- Drum coring (WMF-634) ventilation consists of a glovebox suite enclosed in a secondary containment enclosure. Exhaust from the glovebox and from the secondary enclosure passes through multistage HEPA filters before exhausting with the main facility exhaust. (13) This is a Zone 3 area.

- The AMWTF (WMF-676) is divided into clean areas and three ventilation/radiological confinement zones (Zones 1, 2, and 3). Exhaust from the ventilation zones are separately conveyed to the atmosphere in individual flues. Zone 1 areas are served with a single-stage bank of HEPA filters and Zone 2 areas have two stages of HEPA filtration, which exhaust to the main stack. Zone 3 areas are served with three stages of

HEPA filters. [13] The drum opening hood filters are changed after 1,000 drums have been processed. [57]

- Glovebox Zone 3 environments have three stages of HEPA filtration but with much lower flow rate requirements than other Zone 3 areas. [13]

- The (WMF-635) DRF Zone 3 ventilation system includes pre-filters and HEPA filters which are removed along with any significant material from the ventilation ducting. Inspection/replacement/cleaning of the WMF-635 DRF ventilation system and associated equipment is conducted when 1,000 overpack drums have been opened in the DRF. [50]

The ventilation inlet and housing are first inspected to determine if contamination may be present and if the change/containment bag is intact. For both pre-filters and HEPA filter replacement the containment/change bag is taped to the filter housing spigot to contain material during removal. The change bag is inspected, surveyed and unrolled from the outer groove of the spigot. Manipulating though the change bag(s), the pre-filter or filter is withdrawn from the housing and placed into the bottom end of the change bag and visually inspected. The change bag is closed with a twist and tape. Depending on radiological contamination, pre-filters/HEPA may be doubled bagged. The bagged pre-filter/HEPA filter is placed into a secondary bag and tape-sealed closed and the filter is folded to fit into a 55-gallon drum. The bagged pre-filters or HEPA filters are packaged into a staged 55-gallon or larger drum. Only one unmonitored HEPA filter or pre-filter is packed into each 55-gallon drum. No other waste material other than that generated during change-out operations is allowed in the waste drum. Incidental waste generated during filter replacement may be placed into the same waste container as the removed filter. New containment bags with replacement HEPA filter or pre-filters are installed. [56, 59, 60] Spent pre-filters, HEPA filters, and any secondary waste generated during removal operations from both Zones 2 and 3 are discarded individually or as a single group (with no other materials) in a 55-gallon or larger waste container. [60]

Vacuum cleaners and portable air-handling equipment are equipped with HEPA filters and are used to control radioactive contamination by vacuuming gross amounts of surface contamination, or loose debris. Vacuum cleaners and air-handling equipment are used under the direction of Criticality and/or Radiological Safety and may be used in WMF-615, WMF-634, and WMF-636, but are not limited to those areas. RCT's survey HEPA-filtered vacuums and air-handling equipment for radiation and contamination under the following conditions: after each use when a significant change in contamination or radiation levels is possible; prior to transfer to another area; prior to and after dumping and/or HEPA filter change out; or as required by routine survey frequencies. [75]

3.6.4 Characterization Operations (WMF-628, -634, -635, -636, -676)

TRU waste characterization operations at the AMWTP include a variety of nondestructive and/or destructive processes used in the verification of process knowledge (PK) and AK information for each waste. Waste retrieved from the TSA-RE or the Type II storage modules, from receipt of offsite waste, or newly generated is characterized using a combination of two or more of the following technologies: RTR/VE, radioassay, headspace gas sampling (HGAS), and homogeneous solid sampling and analyses as required by the WIPP WAP. In addition, every container is characterized for transportation by HGAS, as required by the WAC. Characterization data are used to optimize treatment processes for criticality control; to certify waste for disposal at the WIPP, or other onsite or offsite facilities; and to ensure compliance with regulations governing storage and transportation of TRU waste. IDCs, SCGs and WMCs are verified and PIs are identified by the operators during RTR and VE in support of TRU Programs characterization activities. The implementation of the March 13, 2013 WIPP WAP changes removed HGAS, and homogeneous solid sampling and analyses as a requirement; sampling may be requested to resolve issues of HWN assignment for waste stream profiling. If required, the principal items of equipment used at the AMWTP for characterization are RTR units, a box radioassay system, drum radioassay systems, drum-venting/headspace gas sampling units, a drum coring system/solid sampling glovebox, and gas generation testing systems (GGTS). These systems are located in WMF-610, WMF-628, WMF-634, WMF-635, and WMF-676. Fast scan assay or noncertified scan (or equivalent technique) as well as RTR equipment may also be deployed to aid in the identification of waste. [13, 51]

The applicable AMWTP procedures and locations for waste characterization operations are listed in the Table 3.7.

Table 3.7. Waste characterization operations, processes, buildings/areas, and applicable procedures

Operations	Processes	Building/Area	Applicable Procedures	Doc Section
3.6.4 Characterization	NDE (RTR, nondestructive assay [NDA], HGAS, gas-generation testing [GGT], packet assay monitor [PAM])	WMF-610 WMF-628 WMF-634 WMF-635 WMF-676	INST-OI-12 [61] INST-OI-41 [62] INST-OI-43 [48] INST-OI-81 [63] INST-OI-115 [135] INST-FOI-01 [64] INST-FOI-25 [39] INST-OI-14 [71] INST-OI-15 [72] INST-OI-60 ([156] INST-OI-99 [157] CCP-CM-013 [10] CCP-TP-083 [121]	3.6.4.1
	VE	WMF-634 WMF-628 DTF WMF-676 Box lines WMF-676 DWPG WMF 676 SCW	INST-FOI-17 [40] INST-FOI-21 [27] INST-FOI-22 [146] INST-FOI-23 [32] INST-OI-34 [73] INST-OI-16 [65]	3.6.4.2
	Coring/Solid Sampling of Homogeneous Solid Waste S3000/S4000	WMF-634	INST-OI-16 [65] INST-OI-73 [66] INST-OI-75 [67]	3.6.4.3

3.6.4.1 NDE Activities

Waste characterization is conducted in Buildings WMF-610, WMF-628, WMF-634, WMF-635 and WMF-676 and includes examination by several nondestructive activities as described below:

- RTR is an x-ray technique used to confirm the specific waste matrix code and waste description, identity PIs and provide data for waste material parameters. [51, 61] AMWTP operates two RTR units located in WMF-634. Both units are used for certified scanning of either drums (55-gallon, 83/85-gallon, 100-gallon) or boxes. During certified and noncertified RTR examination of boxed waste, the summary category and waste matrix code (WMC) group for each container are determined. Real-time radiography is also used to identify the presence of *liquids* (including mercury), items prohibited from the box line, and items that require segregation or further treatment in the box line prior to supercompaction in WMF-676. [135]

- In the case of unlabeled boxes or boxes with illegible labels, RTR is used to identify and verify the container contents. Based on the contents, the RTR operator technician (OT) then recommends an assignment of a WMC group (i.e., combustible waste, filters, graphite, heterogeneous debris, inorganic nonmetal, lead cadmium metal, or uncategorized metal) and an IDC based on the physical form of the waste as described in RPT-TRUW-05, Waste Matrix Code Reference Manual. [13, 61, 62, 63 76]

- The AMWTP uses a noncertified scan or equivalent technique on its RTR System as a nondestructive examination process. The purpose of this noncertified scan, or equivalent, technique is to screen candidate containers to identify overall physical forms and contents of radioactive and mixed waste within AMWTP and non-AMWTP waste containers. These container sizes may include 55-gal, 83-gal, 85-gal, and 100-gal drums, as well as various box sizes up to 58.5 in. wide by 76.5 in. high by 96.0-in. long. Additionally, the RTR quick scan technique provides a digital data recording of the waste container's contents as a permanent record. [156, 157]

- Nondestructive assay (NDA) is performed to characterize each drum or box for radiological content. The Drum Assay System located in WMF-634 is designed to measure FGE for criticality safety control in the AMWTP process areas and to ensure compliance with the radiological characterization requirements specified in the WIPP CH-WAC. [71]

- Drum Assay Systems (Z-390-100 and Z-390-101) are automated NDA systems used to measure FGE for criticality safety control in the AMWTF process areas and ensure compliance with radiological characterization requirements for supercompaction feed drums. The drum assay machines are located in WMF-676 along the two conveyors from the north and south box lines to the Supercompactor and measure the FGE for each feed drum prior to entry into the Supercompactor. [64]

- The PAM located in the SCW area is used to measure the FGE of waste packets (e.g., bagged bottles/jars of squeezants, sample containers, waste packages) prior to being bulk packaged or transferred into the SCW glovebox for treatment. [39]

- The Retrieval Box Assay System (RBAS) located in WMF-634 is used to determine FGE and TRU alpha activity concentration in waste boxes prior to movement of the boxes into a box line to be dismantled and the contents removed, repackaged, and re-assayed. [72]

- Headspace gas WAP sampling and analysis of waste containers is conducted in WMF-634 using an automated manifold system with gas chromatography/mass spectrometry (GC/S) and gas chromatography/thermal conductivity detector (GC/TCD) methods. Prefilter samples are taken by penetrating the carbon composite filter on vented containers with a side-port needle attached to a probe gun and collecting the sample from beneath the drum lid. Alternatively, the sample may be collected using a sampling port device mounted in a drum lid or as part of a filter. [48]

- Gas Generation Testing (GGT) is conducted in WMF-635 on selected containers determined to be test category drums to determine the hydrogen concentration and pressure. The selected containers are drums with decay heat exceeding the analytical limit, the waste type has not bounding G value, or the flammable VOC concentration in the container headspace cannot be demonstrated to be less than or equal to 500 parts per million (ppm). Containers are loaded into the Gas Generation Test Canister (GGTC), which is closed and pressurized with air or nitrogen, and heated. The data is used in the calculation of the hydrogen/methane and total gas generation rate. [121]

- The Transportation Only HSG Unit in WMF-628 is used to analyze headspace gas from TRU waste containers to determine flammable gas concentration in the head space of containers for transportation to WIPP. A sample is collected from a waste container headspace, injected into two different columns in a gas chromatograph. The samples then go to a mass spectrometer (MS) and are analyzed for detection of VOCs and hydrogen and methane. The data are used to calculate concentrations of the compounds detected. [81]

3.6.4.2 Visual Examination (VE)

VE is an intrusive physical examination of the contents of a drum or box used to identify and verify physical form and the absence of PIs as well as to confirm that the waste matches the waste stream description and the WMC assigned to a waste container. VE may be conducted while performing specific operations in which the waste can be visually examined, either while in an opened container, when the waste is removed from a container, during repackaging of waste, or while the drum is opened prior to solid sampling. VE may also be used to characterize AMWTP waste (such as secondary waste) at the time of generation/packaging to identify physical form and to verify the absence of PIs. [32, 40, 65, 73, 146]

Prohibited items identified during visual examination are removed and treated if applicable or segregated for future evaluation and dispositioning. [27]

VE in the WMF-676 DWPG was used in the past to confirm RTR data. The drum was prepared in the DOHE. The drum lid was removed and packaged, the rigid liner lid was opened, and a temporary drum cap bag was attached to the top of the drum in place of the lid. The drum was transferred to the DWPG and docked to the horizontal ports. Waste was then removed from the original drum, visually examined and repackaged into a new container after examination. [27, 40]

3.6.4.3 Solid Sampling of Homogeneous Solid Waste S3000/S4000

Inorganic homogeneous solid, organic homogeneous solid, and soil/gravel waste containers may be sampled by either coring the waste or collecting grab samples. Each waste container is processed in the DCSRS only after a complete cleanout before and after processing to minimize cross-contamination of the samples collected from each source drum. The implementation of the March 13, 2013 WIPP WAP changes removed homogeneous solid sampling and analyses as a requirement; sampling may be requested to resolve issues of HWN assignment for waste stream profiling.

3.6.4.3.1 Core Sampling

Containers of direct load homogeneous solids or soils are processed in the WMF-634 DCSRS to support onsite and offsite characterization. The DCSRS consists of a core retrieval glovebox with associated drilling equipment, a core bit preparation glovebox and a sample preparation glovebox where cored materials are processed for sampling. The waste is packaged in 30-gallon or 55-gallon drums, which may be in 55-gallon or 83/85-gallon overpack drums, respectively. A representative core is retrieved to provide a sample for external laboratory analyses. Samples are analyzed for total metals, VOCs and SVOCs. The analyses provide data required to satisfy the characterization requirements of MP-TRUW-8.2, and to identify contaminated waste or other waste categories requiring treatment. [51, 65, 66]

A homogeneous solid waste container is transported to the DCSRS; the TID, drum lid-locking ring and bolt are removed and any filter vent(s) are removed. The inside of the drum is surveyed. Depending on the survey results, the drum lid may or may not be removed prior to entry into the glovebox. A new drum transfer sleeve is attached to the bag-in port, and the waste container is docked in the core retrieval glovebox. If necessary, the lid is removed and absorbent material present on top of the inner drum or rigid liner is moved aside or bagged and set aside inside the glovebox. The lid is cut out of the drum/liner, removed, and staged. Any spacers are removed if present and set aside and the drum waste bag is cut away. The removed outer drum lid and lid locking ring are packaged per applicable AMWTP procedures (e.g., INST-OI-24). [25, 65, 66]

Using the appropriate automated or manual coring tools, the coring bit is lowered into the waste and the waste is cored. Manual core sampling within the DCSRS is conducted when wastes are not amenable to the normal automated coring processes (e.g., containers that exhibit lower fill factors or contain waste that is less densely packed than typical sludge and soil/gravel wastes). Manual core sampling uses nonrotational coring tools and is performed within the confines of a Zone 3 glovebox (i.e., DCSRS). Core samples are collected by manually driving a certified-clean core tube liner into waste at a randomly established coring location. [65, 66]

When coring is complete, the core tube liner is pulled out of the core barrel and the exposed core tube liner is capped. After the tube is capped, it is extracted until completely free of the core barrel. The other end of the core tube liner is then capped and the core is then visually examined to record the physical description and recovery results. [65, 66]

The core-tube liner with core sample material is wiped down and passed into the sample preparation glovebox. Sample/sub-sample materials are collected from random locations on the core and placed in appropriate sample containers to be sent for analyses. Sample vials or jars are wiped with a disposable wipe prior to removing from the glovebox. The sampled core-tube liner ends are recapped. [65, 66]

Residual core material is returned to the source drum. Fissile materials removed from a waste drum and any waste generated as a result of processing that waste drum are removed from the glovebox and put back into the same drum prior to docking another drum. All equipment and coring tools used are wiped down to a visible clean condition Waste material is returned to the source drum in the following priority: (1) Core material, (2) original materials (plastic absorbents) and (3) secondary waste generated as a result of coring and sampling. When secondary waste is not packaged into the source drum because of insufficient head space, it is bagged out of the glovebox, surveyed and loaded into 55-gallon drums. (25, 65, 66)

If liquids are identified during core sampling of an AMWTP legacy waste container, any core material is returned to the source drum, all secondary waste is bagged out of the glovebox and the drum is identified for treatment (liquid absorption) in WMF-628 (DTF) as described in Section 3.6.5.4.1. If liquids are identified during sampling of an offsite waste drum, all original material and secondary waste are returned to the drum and the core sample is sent for analysis. (25, 65, 66)

3.6.4.3.2 Container-in-Container Sampling

Container-in-container sampling of TRU homogeneous solids or soil/gravel (S3000 or S4000) wastes is also conducted in the WMF-634 DCSRS gloveboxes using a manual grab sampling method. Container-in-container sampling is used when the waste form is other than direct loaded, including waste packaged in small inner packages (e.g., metal or plastic containers or in small plastic bags). Samples are analyzed for total metals, volatile organic compounds and semi-volatile organic compounds. (67)

For sampling the small inner packages; the drum is docked as previously described, the drum locking ring and bolt are removed, and surveyed, and sharp edges of the ring are taped prior to packaging. The filter vent(s) is removed from the lid to be added to the waste inventory of the drum upon closure. The lid is surveyed and removed, taping the sharp edges as needed and packaged. (25, 67)

Packing material (e.g., vermiculite) is removed and put into a plastic bag; the drum waste bag(s) are cut away from the contents; each inner package is removed from the source drum and sequentially numbered. Random packages are selected and the sampling method is based on the type of material (e.g., small puck, loose material, large puck). Sample material is placed into a sample pan, broken into pieces/particles, and mixed. Subsamples are collected from the pan and placed into appropriate sample vials or jars, weighed, recorded and labeled. Excess material in the sample pan is returned to an appropriate container, closed and returned to the source drum prior to closure. The glovebox is cleaned and the drum exported. Samples are bagged out of the glovebox and prepared for shipment to an approved laboratory for analyses. (25, 67)

If liquids are identified during solid sampling, they may be treated prior to undocking the drum from the glovebox if there is sufficient headspace to accommodate the addition of an appropriate absorbent (e.g., Aquaset II-G® for aqueous or Micro-Cel® E for organic liquids or SP-400® or an approved absorbent suitable for use).

Fissile materials removed from a waste drum and any waste generated as a result of processing are removed from the glovebox and put back into the same drum prior to docking another drum. All equipment and sampling tools used are wiped down to a visible clean condition. Waste material is returned to the source drum in the following priority: (1) Source drum waste material, (2) original materials (plastic absorbents) and (3) secondary waste generated as a result of sampling. When secondary waste is not packaged into the source drum because of insufficient head space, it is bagged out of the glovebox, counted by packet assay, surveyed and bulk loaded into 55-gallon drums. [25, 67]

3.6.5 Treatment

Waste treatment at the AMWTP is conducted on TRU waste to render the waste containers compliant with the WIPP WAC and WAP requirements, to meet AMWTP storage requirements and to meet Supercompactor acceptance criteria. Supercompaction is also conducted to reduce waste volume. Treatment operations are conducted in buildings WMF-628, WMF-635, and WMF-676 and include PI removal/treatment, size reduction (e.g., supercompaction), liquid remediation, absorption, and resorption. The procedures and locations for waste treatment operations are listed in the Table 3.8.

Table 3.8. Waste treatment operations, processes, buildings/areas, and applicable procedures

Operations	Processes	Building/Area	Applicable Procedures	Doc Section
3.6.5 Treatment	Prohibited/ Nonconformance Item Removal	WMF-676 DWPG WMF-676 SCW WMF-676 Box lines WMF-634 DCSRS	INST-FOI-21 [27] INST-FOI-23 [32] INST-FOI-16 [37]	3.6.5.1
	Waste/Size Reduction (WMF-676)	WMF-676 Box lines WMF-676 Room 232 WMF-676 Room 224B WMF-676 Room 225A	INST-FOI-32 [33] INST-FOI-20 [34] INST-FOI-16 [37] INST-FOI-15 [44] INST-MS-0097 [69]	3.6.5.2
	Liquid Remediation	WMF-635 DRF	INST-OI-114 [160]	3.6.3.6
	Liquid Absorption	WMF-676 SCW WMF-628 DTF	INST-FOI-23 [32] INST-FOI-20 [34] INST-FOI-21 [27] INST-FOI-40 [159] INST-OI-68 [38] INST-EC&P-7.10 [35] INST-FOI-16 [37]	3.6.5.4
	Absorption/ Resorption(Shaker Table Operations)	WMF-628 DTF	INST-OI-68 [38]	3.6.5.5
	Homogeneous Solid – Treatment in Box Line	WMF-676 Box line	INST-FOI-39 [136]	3.6.5.6

3.6.5.1 Prohibited/Nonconformance Item Removal and Treatment

Prohibited/nonconformance items are waste items that are not suitable for direct treatment via the primary WMF-676 supercompaction treatment process, including items discovered during RTR and box line waste segregation operations. These items do not meet the Supercompactor acceptance criteria for direct treatment or do not meet the WIPP WAC/WAP.[32] Prohibited item removal and repackaging are conducted in multiple containment areas to support of onsite and offsite compliance. Prohibited liquid treatment is described in Sections 3.6.5.3 and 3.6.5.4.

- WMF-676 Facility areas: prohibited/nonconformance item removal
  - Box lines
  - DWPG/SCW.

3.6.5.1.1 Prohibited/Nonconformance Item Removal

Prohibited items are identified during characterization activities such as RTR, solid waste sampling and sorting and visual examination in the box lines or gloveboxes. Homogeneous solid waste drums containing prohibited or nonconforming items may be transported to the DWPG for removal of the items and/or treatment. Debris waste drums containing prohibited or nonconforming items may be transferred to the DWPG/SCW for removal of the items, treated by supercompaction or overpacked into VDOP boxes to be processed in a box line for either removal of the item, treatment in the box line and/or treatment by supercompaction. [32, 34, 37]

Prohibited and nonconformance items identified in the box lines may be segregated from debris waste and packaged into a 55-gallon and overpacked into an 85-gallon drum or bagged out and packaged for later treatment in DWPG/SCW such as: [32, 37]

- Containerized liquids (including mercury)
- Unknown or flammable liquids
- Corrosive, explosive, reactive, incompatible or pyrophoric materials
- Homogeneous solid waste or soils exceeding 50% of container contents [27, 40]
- Items suspected of containing PCBs (e.g., light ballasts)
- Unvented pressurized containers (except fire extinguishers).

3.6.5.1.2 Prohibited Item Treatment

Treatment of prohibited items is conducted in the box lines, Supercompactor glovebox, and the SCW glovebox system to support onsite and offsite compliance. The SCW prohibited item treatment process is illustrated in the process flow for treatment of liquids shown in Exhibit 1 of INST-FOI-23. Prohibited wastes are defined as waste that is prohibited from acceptance at WIPP. Prohibited debris items treated to remove the prohibited characteristic are managed as AMWTP waste and are candidate wastes for supercompaction. Containers with WIPP-prohibited liquids are treated using nonhazardous solidification agents (e.g., Aquaset®, Aquaset II-G®, SP-400®, Petroset II® or Petroset II-G® or Micro-Cel® E) to render the waste acceptable prior to shipment. [34, 35, 163] The resulting AMWTP waste is characterized and assigned to an appropriate waste stream. [5, 25]

Prohibited waste may be stored in the SCW glovebox system, drum repack system, or SCW collection area until transferred out of WMF-676. Examples of prohibited or nonconforming items removed from original waste containers that are treated or managed in the SCW glovebox system are: [27, 32, 42, 61, 183, 184]

- containers with a total volume of liquid greater than 5% by volume
- elemental mercury, in the form of containerized liquid [42]

- aerosol cans with total observable liquids greater than 49 ml
- containerized unknown prohibited liquids
- pressurized containers [42]
- PCB items.

Non-PCB containerized liquids collected from waste containers, internal containers or from waste items (e.g., bottles, cans, jars, wet cell batteries, valves, pumps) may be separated from other waste. In the DWPG/SCW, the liquids are evaluated for compatibility with other liquid waste and are only packaged with other compatible liquid waste containers. After determination of chemical compatibility, the liquids are segregated into groups and sent to either the WMF-628 DTF or the WMF-676 SCW glovebox for treatment. [37, 167]

Liquids are first examined to determine if the liquid has multiple phases. Multi-phase liquid waste is separated into containers for further evaluation (e.g., testing, sampling) and treatment. The liquids are tested to determine specific gravity, and pH, if aqueous. Aqueous liquids are neutralized as necessary (e.g., pH <3 use sodium bicarbonate and pH >11.5 use sodium bisulfate) prior to absorption with Aquaset II-G®. Micro-Cel® E, or SP-400® is used to absorb organic liquids. The containers of absorbed liquid are double bagged in the glovebox and bagged out as a waste packet. Waste packets containing neutralized and stabilized waste are placed into a collector drum for storage. Waste packets are packaged singly in a 55-gallon drum if un-assayed. Assayed packets are packaged in bulk in a collector drum depending on FGE values. Empty containers are bagged out and transferred to the SCW collection area for storage until the appropriate disposition has been determined. [27, 32, 39, 40]

Containers of elemental mercury removed from waste containers or segregated from other liquid are absorbed using Hg Absorb. [32]

Pressurized containers that cannot be depressurized using standard methods or compaction are vented in the SCW glovebox system. A puncturing device is used to release gas from the container. After puncturing, the container is opened as necessary and any free liquid is poured into another container. The depressurization area is decontaminated after each container depressurization, as necessary. [32] Depressurized containers are bagged out of the glovebox and packaged per directions of Waste Services. [32] Pressurized containers containing chlorofluorocarbon (CFCs), flammable carrier gases, or unknown contents are not processed, but are returned to the INL Management and Operating (M&O) contractor or are managed per direction from ES&H. [32]

PCB contaminated items are prohibited from supercompaction and are packaged in drums and transferred from the facility. [42]

Bulk liquid contained in PCB equipment (e.g., capacitors, ballasts, transformers) is prohibited from treatment. [38]

3.6.5.2 Waste/Size Reduction (WMF-676)

The AMWTP facility, WMF-676, houses a Supercompactor, a shredder, and a plasma arc cutter that are used to reduce the volume of waste and size-reduce emptied original waste containers (e.g., drums and boxes) and large items (e.g., gloveboxes, lathes, other machinery) to support subsequent containerization and/or treatment.

3.6.5.2.1 North and South Box Lines

Debris waste packaged in boxes and drums overpacked in VDOPs are transported into one of two box lines (i.e., north and south). Prior to entry into the box lines, lids are cut off the boxes remotely using the Box Opening Gantry Robot (BOGR), or manually. The lids are usually left in place (on top of the box). The boxes or boxes and lids are transferred to the box line areas. If approved, boxes overpacked in Bull Run Soft-sided overpacks (BRSOPs) are processed directly into the box lines. In the box lines waste is dumped into a trough or removed from the containers (drums and boxes) using the remote controlled demolition robots (the Brokks®), or the PaR manipulator. Box tipper units in both the north and south box lines are used to tip waste boxes over the box line troughs. The Brokks® are floor-mounted hydraulically-driven, remotely operated manipulators. Two Brokk® units are located in the north box line. One Brokk® unit and the PaR remote manipulator and pintle grabber are located in the south box line. The Brokks® and PaR manipulators are used to sort, segregate, and size-reduce waste (and containers, if required) dumped into the box line troughs. The south box line is also equipped with an Import Transfer Port (ITP). Drums damaged during box line loading or during lidding operations or other approved waste containers may be brought into the south box line via the ITP. [25, 34, 37, 40, 148]

The box line debris waste is sorted or size-reduced as needed. Waste is sorted to remove or treat items prohibited from the Supercompactor or shipment to WIPP and is visually examined to identify and verify physical form. Fire extinguishers may be depressurized by a controlled discharge in the box line. Internal containers with liquids are removed. The waste is loaded into 55-gallon thin-walled drums ("silvers") for feed to the Supercompactor. The cleanout of the treatment box lines is limited to housekeeping (e.g., criticality cleanout) and to remove prohibited items (reference Section 3.6.3.2). [25, 34, 37, 40, 148]

Spills of TRU waste material outside the box line troughs are cleaned up by the end of the next shift and the material is placed into the trough. Any liquids discovered during processing are absorbed using an approved absorbent and mixed with debris. PCB-contaminated liquids and debris are managed per ES&H direction. Elemental mercury liquids found in the box lines are absorbed using HgAbsorb and mixed with debris. Empty boxes and box lids verified to contain no significant amounts of contamination are transferred to a shredder where the material is currently handled based on the Waste Services HWD-021411-01 as IDC BN-539. [148]

Holdup material consists of debris and dust that collects on surfaces within the area of box line processing in the facility. Wastes are collected from the surfaces and packaged according to INST-FOI-28. [151] The intentional mixing of S3000 and S5000 waste is not conducted. Co-generated S3000 and S5000 waste whose overall VE established >50% debris is placed into

debris containers and are assigned BN-508 (if non-PCB). Waste containers that contain >50% S3000 wastes are managed separately as BN-516.

3.6.5.2.2 Supercompaction

The Supercompactor is a glovebox with a 2,000-ton capacity compactor used to compact 55-gallon feedstock waste drums to roughly one-fifth their normal size. Supercompaction is the treatment to reduce the volume of debris waste. Supercompaction is also the treatment for unprotected sharp objects, sealed containers greater than four liters, excess layers of confinement because there are no layers of confinement following supercompaction, containers with a total volume of observable liquid less than or equal to 5% by volume, and aerosol cans with a total liquid volume less than or equal to 49 ml. The Supercompactor feedstock consists of waste generated at RF, MD, BC, BN, AE, AW, SD, LA, and RL. [122, 179, 189, 190, 191, 192]b

3.6.5.2.2.1 Supercompactor Cleanout

Cleanout of the Supercompactor glovebox is performed as needed to remove maintenance and operation waste items from the Supercompactor glovebox suite which are too large to bag-out of the glovebox, or used to remove smaller debris as part of the overall cleanup operations. Cleanout is performed anytime waste accumulates in the gloveboxes or in conjunction with the Annual Glovebox Cleanout or with a Criticality Cleanout. [69]

Maintenance debris from Supercompactor cleanout consists of empty or nonfissile maintenance waste items and operational waste. Operational waste is described as old glovebox gloves, port covers, any nonserviceable tools and slings and debris. Waste is accumulated during cleanup of the Supercompactor gloveboxes (e.g., infeed, Venturi airlock, post compaction) and conveyers. Waste accumulates around the Supercompactor parts. This waste consists of debris or a mixture of paint flakes, solid waste, and dried squeezants. The waste is VE'd, packaged in 55-gallon silver drums and placed into the conveyor system for lidding, assay, and compaction. The intentional mixing of S3000 and S5000 waste is not conducted. Co-generated S3000 and S5000 waste whose overall VE established >50% debris is placed into debris containers and are assigned BN-508 (if non-PCB). Waste containers that contain >50% S3000 wastes are managed separately as BN-516. [69]

Squeezants are liquids expressed from debris waste containers during supercompaction and are removed from the Supercompactor sump during criticality cleanout and during routine cleanout/removal. The removed liquids are put into squeezants bottles/jars and all areas are visually inspected for debris. All waste is double-bagged at the collection area boundary. Squeezant packets (bagged bottles/jars) are placed individually into containers (smaller than or equal to 55-gallon drums) for transfer to SCW for processing. [34]

Bagged debris generated during removal of squeezants from the Supercompactor is bagged out of the Supercompactor glovebox. Debris packets are placed into 5-gallon buckets within an

[b] RL is no longer used as feedstock. It was a one-time activity.

accumulation container prior to being assayed. After assay the debris packets are packaged together based on assay results. (43, 64)

3.6.5.2.3 Size Reduction of Large Items

Size reduction of large wooden, metal and concrete items may only be performed in the hot maintenance cell (Room 224B) and the shredder room (Room 225A) and other waste items are size-reduced in the south box line (Room 228B) using a guillotine.

The hot maintenance area contains equipment (e.g., plasma arc cutter, saws all, drills, etc.) used to physically size waste items such that the waste may be processed in the Supercompactor or be containerized and removed from WMF-676. (33, 159) The plasma arc cutter unit is used to size-reduce large metal and concrete items that cannot be reduced using the Brokk®. Dust accumulation from size reduction activities is collected and packaged according to procedures. (33)

The shredder is used to reduce the size of RCRA-empty waste containers (i.e., wooden, FRP, and metal boxes) including lids. Empty boxes and lids (e.g., metal and wood) from the north and south box lines are moved to the shredder to reduce them in size. Prior to transferring a box to the box size-reduction area, the box interior and lid is inspected to verify that there is insignificant (i.e., <15 cm^3) waste material present. Empty containers generated during waste repackaging conducted in the SCW and DTF gloveboxes may also be sent to the shredder for size reduction. (25, 37, 44)

Shredder contents are visually inspected to insure that shredding is complete and that no large box pieces or nonshredded materials remain. Shredder contents are emptied from the shredder into an export box through a gravity powered chute into a metal waste box. Sleeving is bunched and twisted and secured with a tie wrap. The sleeve is tightly bunched and twisted then wrapped with vinyl tape and the cut sleeve on each end is taped to close. (44)

Some large waste items removed from the box line are size-reduced using a guillotine located in Room 228B, the south box line. The item is placed onto the guillotine feed table, pushed to the desired location and cropped to size for drum loading. Sized material is moved back into the box line trough via the guillotine disposal chute. Emptied boxes and box lids are cleaned of any excess material and transferred to the shredder area. (37)

Some large waste items removed from the box line cannot be size-reduced. Authorized feedstock within WMF-676 that cannot be size-reduced through remote-handling are packaged into a System 352 export box or an SWB. The large items placed in a System 352 export box are first loaded into a Super Sack and transferred out of the facility through the shedder chute. The oversized items placed in an SWB are placed on a conveyor and transferred out of the facility. (159)

3.6.5.3 Liquid Remediation

Containers of S3000 inorganic sludge wastes with prohibited liquids are treated to support WIPP compliance. These types of containers are candidates for treatment in WMF-628 DTF. Overpacked containers of S3000 waste containers are taken into the DTF and un-overpacked prior to treatment. The liquid may be vacuumed from the source waste container into a collector drum and treated with absorbent. [38, 160]

3.6.5.3.1 Drill and Drain

Procedure INST-OI-114, Liquid Remediation of Inorganic Sludges, provides instructions for liquid remediation activities on drums contained in Summary Category S3000 inorganic sludge waste streams BNINW216, BNINW218, BN004, BN835, and BN836. This activity is designed to perform remediation on drums with prohibited amounts of liquid. This process is not intended to be used to treat containers internal to the drum/drum liner that contain liquids. The process may include removing the 55-gallon drum from an overpack, treating liquids between the overpack and inner container, opening the 55-gallon drum for treatment of liquids on top of the waste, drilling into the 55-gallon drum and removing liquids using a vacuum and collection container, and re-overpacking the 55-gallon drum once liquid remediation is complete. This procedure also includes instructions for absorption of these liquids and placement back into the source container or the secondary waste collection container. [160]

3.6.5.4 Liquid Absorption

Un-containerized liquids identified in waste containers are treated based on location of the liquid in the container, type of waste (e.g., debris or direct loaded solids) or generation process (e.g., Supercompactor squeezants). Un-containerized liquid wastes identified in the box lines troughs are absorbed in the trough and removed with the debris for supercompaction.[37] Squeezants are transferred and treated in the SCW glovebox. Liquids identified in homogeneous solid container-in-container waste containers are treated by absorption in the WMF-634 DCSRS during sampling. [27, 38, 82] Liquids identified in homogeneous solid waste containers during coring are sent for treatment in the WMF-628 (DTF). [65]

Treatment of containerized liquids removed from waste containers is described in the Prohibited Item Treatment Section 3.6.5.1.2.

3.6.5.4.1 Liquid Absorption in WMF-628 Drum Treatment Facility (DTF)

The DTF is a soft-sided containment multi function enclosure tent located in WMF-628. Liquid absorption operations were previously conducted in a soft-sided containment tent in WMF-635. Each is a tented area with its own filtered ventilation system, adequate drum treatment/handling tools, and radiation monitoring instruments. [41]

Observable liquids identified in prohibited quantities in S3000 and S4000 waste of direct loaded drums with sufficient headspace are treated in WMF-628 DTF. Aquaset II-G®, and

Micro-Cel® E or SP-400® are the chemical absorbents used for aqueous and organic liquids, respectively. [38]

Based on the quantity of liquid present, the amount of absorbent needed is calculated. Layers of containment are breached as necessary to access the liquid to be treated, and the appropriate absorbent is added to the container and mixed. Secondary waste items generated during treatment are placed in the waste container prior to closure. If sufficient headspace is not available in the source container, waste generated during processing are bagged out of the DTF and packaged per applicable AMWTP procedures (e.g., INST-OI-24) under the direction of Waste Services. [25, 38]

3.6.5.4.2 Liquid Absorption in WMF-676 SCW Glovebox System

The SCW glovebox system is located in WMF-676 and composed of four interconnected gloveboxes; (1) transfer, (2) treatment, (3) sampling, and (4) container-in-container gloveboxes. Each glovebox is individually connected to the ventilation system. The SCW room also contains the SCW PAM, a chemical hood and sink, a sample storage refrigerator, and several storage containers. [42] Treatment of liquid waste conducted in the SCW glovebox system includes:

- Liquid from supercompaction of waste (i.e., squeezants),
- Liquid generated from pretreatment processing,
- Liquid drained from fluid containing waste items (e.g., pressurized containers, wet cell batteries, valves, pumps). [32]

Squeezants from supercompaction of feedstock debris waste drums accumulate in the Supercompactor sump located in WMF-676. Squeezant removal is conducted during criticality cleanout or when the sump is 90% full. Liquids are pumped into separate collection containers, bagged out of the Supercompactor glovebox and packaged separately into collection containers for transfer to the SCW. Each bagged jar/packet is assayed in the SCW PAM to determine ^{239}Pu FGE. All packets must be assayed and carry with them via barcode an appropriate FGE value. Packets are placed into the SCW glovebox or before multiple packets are packaged into 55-gallon drums. [32, 34, 35, 36]

All collected liquid containers (bottles/jars) are visually inspected to determine if the waste contains multiple phases. Multi-phase liquids are separated (e.g., inorganic, organic, mercury) by decanting into multiple containers as necessary prior to treatment. [32] The containerized liquids are tested as follows:

- A chemical test strip is used to determine the type of liquid (i.e., organic or aqueous)
- The specific gravity of the liquid relative to distilled water is determined
- A liquid shake-out test is used to determine miscibility.
- The pH is tested and the liquid neutralized as necessary. [32]

Sodium bicarbonate is used to neutralize aqueous liquids with pH less than 3. Sodium bisulfate is used to neutralize aqueous liquid with pH greater than 11.5. The liquid is separated into two or more containers to provide sufficient volume for the addition of absorbent. [32] Absorbent material is added to each container in a recommended ratio and mixed into the liquid. Aquaset®, Aquaset II-G®, Micro-Cel® E, Petroset II-G®, SP-400®, and Hg Absorb are the only chemical absorbents used in absorption activities. Only Hg Absorb is used in mercury absorption activities in SCW. If liquid is present after absorbent addition and mixing, additional absorbent is mixed in, but no more than two additional times. Liquid absorption is not performed more than three times per container. [130, 131, 132, 133, 162]

The SCW glovebox is also used to treat aerosol containers and small inner containers removed from waste containers with liquid contents. Liquid from these containers is emptied into collection bottles/jars for testing and treatment. [32]

Items (e.g., wet cell batteries, valves, pumps, and similar fluid-containing items) that require inspection to determine the presence of liquid are moved into the SCW treatment glovebox and examined for liquid content. Items containing liquids are drained into a new container for testing and treatment. [32]

3.6.5.5 Absorption/Resorption (Shaker Table Operations) WMF-628

This is a discontinued process. Homogeneous solid waste containers are vibrated using a commercial mechanical vibrator (shaker table) located in WMF-628 DTF to facilitate treatment of liquid. Due to properties specific to the RF-003 organic setups waste, vibration of the waste containers causes either the liquid and waste matrix back into contact resulting in resorption of the liquid into the waste matrix or allows the liquid to rise to the surface of the sludge where the liquid can be absorbed onto added absorbent material. [38, 46, 82]

3.6.5.6 Homogeneous Solid Waste Treatment in South Box Line

This is a discontinued process. The RF organic set-up homogeneous solid waste (RF-003/RF-743) is identified as PCB-contaminated and containers with free liquid cannot be shipped to WIPP until the containers are processed by absorption of the liquid. The handling and transit of containers associated with the sludge processing campaign in the south box line included operations conducted in the Drum Import/Export Glovebox (DIEG) located in Room 126B at AMWTF. [139]

Organic set-up waste containers were loaded into an SDOP box in one of the storage modules outside the AMWTF. The PCB SDOP was transported by conveyor (System 345 south box line drum conveyor) to the south box line and subsequently to the south box line for processing. The boxes were lifted by the box line crane into the clamping frame, and partially tipped. All of the sludge drums are removed from the box and placed outside the mixing area. To remove the organic setup wastes for treatment, the containers may have been cut open by the Brokk®. The waste in the bags was removed from the liners and placed in the south box line trough for treatment. The drum and liners were segregated from the waste and undergo size reduction. The sludge was spread over the bottom of the mixing area and un-containerized liquid

was treated by the addition of the appropriate absorbent (e.g., Micro-Cel® E) to the sludge mixture. The absorbent, liquid and sludge were mixed using remote tools until absorption was complete as verified by VE. (136, 138, 139)

VE is used to verify physical form of the waste, prevent shipment of PIs (listed in Exhibit 3 of INST-FOI-22) to WIPP, confirm waste matrix code, confirm waste stream description for each container and verify liquid absorption. During VE in the box line, prohibited and nonconforming nonliquid items and containerized liquids are segregated, packaged and removed from the box line. The inventory of waste (e.g., by weight and volume), waste items (e.g., drum stub bags) and packaging materials for each new 55-gal 90-ml rigid liner is summarized in WTS for each liner/container. (136, 146)

When the liquid has been absorbed (i.e., there is no visible liquids present in the trough), the treated sludge is loaded into a transport container (a reusable 55-gal drum with a new rigid liner without an installed lid) by sweeping the waste into the drum port or by scooping the waste using the clamshell attachment on the Brokk®. When the liner was full of treated waste, the transport container and liner were undocked and moved back to the DIEG via conveyor (System 390 Drum assay conveyor), where the liner was lifted from the transport container and placed into a new 55-gal drum. The drum bag was twisted and taped prior to lidding and transport out of the AMWTF via the System 310 drum dolly. During loading and undocking drums in the DIEG, acceptable glovebox waste (e.g., drum stub bag, changed glovebox gloves) may have been added to the filled liner. The new drums are nominal 55-gal drums containing a filtered drum bag and a 90-mil rigid drum liner inside the filtered bag. (136, 137, 138, 139, 147)

The treated waste underwent VE prior to transfer to Central Characterization Program (CCP) for certification for shipment to WIPP. (146)

3.7 Radionuclides

AMWTP does not add radionuclides during storage, treatment or processing of waste. Therefore, all radionuclides in newly generated waste derived from the storage, treatment or processing of waste are those present when the original waste was delivered to the AMWTP or are the decay products thereof.

There are currently two sources of waste at the AMWTP from which newly generated waste could be derived: waste containers in historical storage and waste containers received under the AMWTP Offsite Waste Program.

Historically stored wastes include waste from AE, AW, RF, MD, BC, and BL, as well as, from non-AMWTP INL sites (see Table 3.1). The radionuclides in this waste, along with the offsite waste (e.g., RL waste, AMWTF-processed waste), are described in detail in RPT-TRUW-07. (83) The predominant radionuclides in this waste will usually be ^{239}Pu and ^{240}Pu. In some containers composed primarily of waste derived from the MD Plant, the predominant radionuclides will be ^{238}Pu and ^{239}Pu. When waste is contaminated with depleted uranium (DU) or enriched uranium (EU) as well as WG Pu the prevalent radioisotopes may include uranium.

Historically stored waste include waste generated from non-AMWTP INL sites, the MFC, Auxiliary Reactor Area (ARA), Central Facilities Area (CFA), Idaho Nuclear Technology and Engineering Center (INTEC), Loss of Fluid Test (LOFT) Reactor (LOF), Naval Reactor Facility (NRF), Test Area North (TAN), Test Reactor Area (TRA) and RWMC (IDCs associated with IW and SD generator prefix).

Information about radionuclides in this waste is primarily found in the Radioactive Waste Management Information System (RWMIS) database, and is summarized in RPT-TRUW-07. [83]

Waste received under the AMWTP Offsite Waste Program includes waste from the RL, the MFC, LANL, NNSS, SRS, Oak Ridge National Laboratory (ORNL), LLNL, GEV, SNL, and ANL-E.

Information about radionuclides in this waste is primarily found in the AMWTP Offsite Waste Stream Profile (Form-1900) for each waste stream, and is summarized in RPT-TRUW-07. [83]

3.8 Waste Certification

Prior to shipment of any of the AMWTP waste to WIPP, waste containers are included in a waste stream for which there is a WIPP-approved WSPF. Containers of waste are certified for shipment to WIPP per the requirements listed in MP-TRUW-8.5. [77]

Characterization certification and labeling are conducted to meet applicable requirements of the WIPP. Documentation of the waste certification process is maintained in accordance with permit conditions and quality assurance requirements. Waste is certified that it meets the appropriate WAC requirements before being transported or shipped to the receiving facility. [2, 7, 13]

3.9 Waste Characterization

Characterization of the AMWTP wastes is initially based on the as-generated waste form with consideration given to the generating process, related generator AK summary reports, hazardous constituents, and PCB status. The HWD and PK are developed by Waste Services. The HWD and PK are placed into the AMWTP operating record and maintained/updated by AMWTP Waste Services. [31]

Prior to profiling the waste for shipment to WIPP, the waste is characterized using RTR/VE, radioassay, HGAS, and homogeneous solid sampling analyses as required by the WIPP WAP. In addition, every container is characterized for transportation by headspace gas sampling as required by the WAP (Section 3.6.4). [1, 5]

3.10 Correlation of Wastes Generated

All waste generated at the AMWTP that is derived from or has contacted TRU waste managed by AMWTP may be managed as TRU until proven by assay otherwise. [25, 30] For

purposes of this document, wastes generated during the same or similar process or activity, no matter the location, and that have the same final waste form are placed into waste groups and presented in the following sections. The waste groups are preliminary designations and do not correlate to the WIPP waste stream.

AMWTP newly generated secondary wastes are managed under the direction of the Waste Services group when generated.

4.0 TRU LIQUID WASTE GROUP

4.1 Liquids Released During Supercompaction of Debris Waste Containers

4.1.1 Waste Description

The TRU liquid waste includes the squeezants waste and is described in HWD 061410-01 and PK, as documented by the AMWTP Waste Services group. Supercompactor squeezants are expressed during supercompaction (Section 3.6.5.2.2). The squeezants are aqueous and organic liquids or in some cases multiple phase liquids packaged in 4-liter polyethylene bottles/jars. The liquids are assumed to be contaminated with the chemical and radiological constituents identified for the authorized Supercompactor feedstock wastes as identified in RPT-TRUW-83 and approved MLLW. [165, 179, 186, 187]

The squeezants waste is comprised of IDC BN-518 as described in Table 4.1, which also provides the dates of generation for TRU squeezants.

Table 4.1. Squeezants IDC, waste description, and generation date.

IDC	IDC Description	Generation Date
BN-518	TRU Supercompactor Squeezants	2004 – ongoing

BN-518 TRU Supercompactor Squeezants: Inorganic and organic liquids generated as squeezants from the supercompaction of feedstock wastes.

4.1.2 Waste Generation

Supercompaction is the treatment for liquids in feedstock waste drums. During compaction of the drums, the liquid is expressed/squeezed from the drums and collected in the Supercompactor sump. The sump liquid (squeezants) is transferred (e.g., manually or remotely pumped) from the sump into one-gallon squeezants bottles/jars during Supercompactor glovebox clean-out. The squeezants can also be removed from the sump manually using a dipper. (Section 3.6.5.2.2.1) [32, 122]

4.1.2.1 Areas and/or Building from which the Waste was Generated

The squeezants waste is generated in the Supercompactor glovebox in Room 232B of the facility (WMF-676).

4.1.2.2 Process Flow Diagrams

The process flow diagram for Supercompactor squeezants is presented in Figure 4.

4.1.2.3 Material Inputs

The materials present in the squeezants waste are aqueous and organic liquids, and incidental liquid mercury expressed from feedstock drums during supercompaction.

4.1.2.4 Waste Volume

See AMWTP WTS for current up-to-date volumes for each IDC. Approximately 100 gallons of squeezants are generated per year. [124]

4.1.3 Waste Packaging

The squeezants bottles/jars are double-bagged at the collection area boundary and may be stored in the Supercompactor area for later removal, or bagged out of the area and packaged into a collector container for transfer to SCW (total of 3 plastic bags of confinement). When the bagged squeezants bottles/jars are removed from the Supercompactor area, they are packaged as either one packet per 55-gallon drum or one packet per transfer device (i.e., 5-gallon bucket) and transferred to SCW for storage and/or treatment.

The SCW packet assay monitor (PAM) system is used for determination of fissile gram equivalent (FGE) ^{239}Pu in containers and packets. At SCW, squeezant packets are assayed to determine the FGE value before they are bulk-packaged into 55-gallon drums or placed into the SCW glovebox.

4.1.4 Waste Characterization

The AMWTP approach to characterization is described in Section 3.9. Squeezants have historically been managed as mixed waste. The squeezants waste is characterized based on HWD 061410-01 and PK, as documented by the AMWTP Waste Services group and the AK for the Supercompactor feedstock debris, as documented by RPT-TRUW-83 and the AK for the MLLW feedstock wastes. [125, 165, 186, 187] AK characterization is augmented by VE, RTR and NDA. The squeezant HWNs/constituents may change over time due to changes in the feedstock waste authorized for supercompaction. Waste constituents and HWNs assigned to the squeezants waste are identified in the Waste Services HWD. The liquid squeezants waste is not characterized for shipment to WIPP, but treated by absorption. Absorbed squeezants waste is described in Section 5.1.

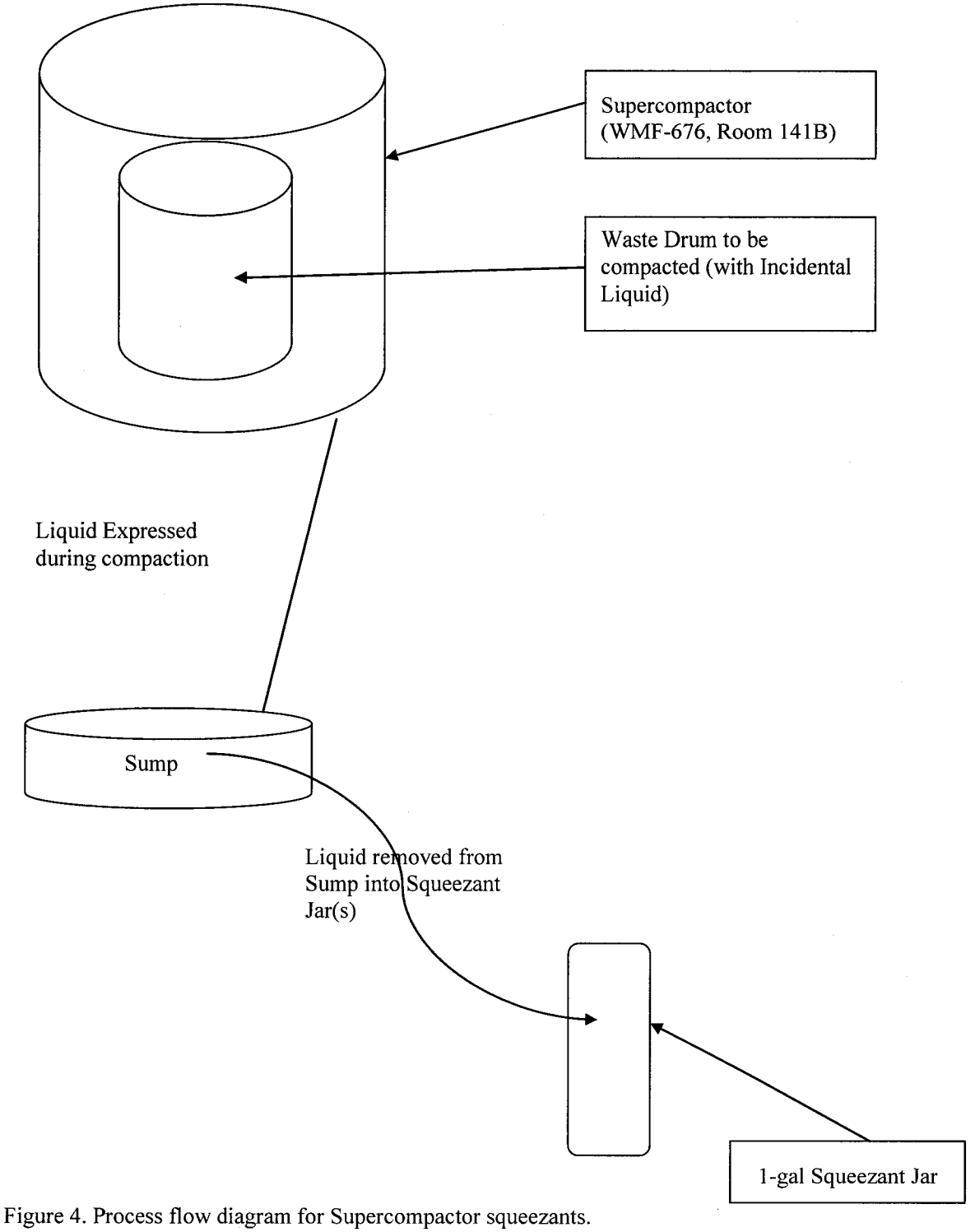

Figure 4. Process flow diagram for Supercompactor squeezants.

4.1.4.1 EPA Hazardous Waste Number Assignments

Newly generated Supercompactor squeezants waste HWNs/constituents may be based on one or more of the following: PK, the RCRA mixture and derived-from rules, authorized Supercompactor feedstock HWNs and a Waste Services determination. The characterization results are documented in an applicable Waste Services HWD. Waste constituents and HWNs assigned to the squeezants waste are identified in the Waste Services HWD. [5, 16, 17, 18, 20, 21, 122, 125, 189, 190, 191, 192]

4.1.4.1.1 Ignitability

The AMWTP Supercompactor squeezants waste is liquid, and has the potential to exhibit the characteristic of ignitability (D001) prior to treatment due to authorization of treatment of pressurized (e.g., aerosol cans) and internal containers with liquids by supercompaction. The waste is not an ignitable compressed gas, or an oxidizer. The Supercompactor squeezants waste may exhibit the characteristics of ignitability (D001) prior to treatment.

4.1.4.1.1 Corrosivity

The AMWTP Supercompactor squeezants waste is liquid and has the potential to exhibit the characteristic of corrosivity (D002). Supercompactor squeezants waste may exhibit the characteristics of corrosivity (D002).

4.1.4.1.2 Reactivity

The AMWTP Supercompactor squeezants waste is liquid. The liquids are generated from the compact ion of authorized Supercompactor feedstock debris wastes, which may include pressurized (e.g., aerosol cans) and internal containers containing liquids by supercompaction.

The newly generated Supercompactor squeezants waste is not expected to meet the 40 CFR 261.23, Characteristic of Reactivity definition of reactivity. The Supercompactor squeezants waste is expected to be stable and should not undergo violent chemical change, react violently with water, form potentially explosive mixtures with water, or generate toxic gases, vapors, or fumes when mixed with water. The waste is not expected to contain sulfide waste which, when exposed to a pH between 2 and 12.5, can generate toxic gases, vapors, or fumes in a quantity sufficient to present a danger to human health or the environment. The waste is not capable of detonation or explosive reaction if subjected to a strong initiating source if heated under confinement. The waste is not readily capable of detonation or explosive decomposition or reaction at standard temperature and pressure. The materials do not contain explosive material and are not forbidden explosives or Division 1.1, 1.2, or 1.3 (Class A or B) explosives as defined in 49 CFR 173. Although the waste may contain wastes that are assigned F006, F007, and F009 listed HWNs that are associated with cyanide electroplating operations, the waste when exposed to a pH between 2 and 12.5 will not generate toxic gases, vapors, or fumes in a quantity sufficient to present a danger to human health or the environment. This waste does not exhibit the characteristic of reactivity (D003).[16, 17, 18, 20, 122, 143, 144, 145]

Any containers that are identified as having prohibited liquid may be treated using: Aquaset®, Aquaset II-G®, Petroset II® or Petroset IIG®, Micro-Cel® E, PIG®, or SP-400® absorbents to ensure that the waste is acceptable for disposal at WIPP. (130, 131, 132, 133, 162)

4.1.4.1.3 Toxicity Characteristic

The AMWTP Supercompactor squeezants waste meets the definition of toxicity for metals and organics as defined in 40 CFR 261.24. Assignment of the RCRA toxicity characteristic metals and organics HWNs to the Supercompactor squeezants is based on PK and feed to the Supercompactor. Waste constituents and HWNs assigned to the squeezants waste are identified in the Waste Services HWD. (125, 189, 190, 191, 192)

4.1.4.1.4 Listed Waste

4.1.4.1.4.1 F-Listed HWNs

The Supercompactor squeezants waste is listed waste. The applicable RCRA HWNs and hazardous constituents for the Supercompactor squeezants waste are assigned based on the RCRA the derived-from rule and PK associated with the Supercompactor feed waste (RPT-TRUW-83). Waste constituents and HWNs assigned to the squeezants waste are identified in the Waste Services HWD. See Waste Services HWD for the most up-to date HWNs. (189, 190, 191, 192)

4.1.4.1.4.2 P-, U- and K- Listed HWNs

The Supercompactor squeezants waste is currently not a P-, U- or K-listed hazardous waste. Waste constituents and HWNs assigned to the squeezants waste are identified in the Waste Services HWD.

- The squeezants are assumed to be contaminated with less than 1% by weight beryllium. The AMWTP does not use commercial chemicals containing beryllium powder. Although Supercompactor squeezants may contain beryllium contamination, the beryllium contamination is only associated spent forms of beryllium; it is not associated with commercial chemical product, an off-specification species, a manufacturing intermediate a container residue, or a spill residue thereof. Based on this information, the P015 HWN does not apply to the Supercompactor squeezants.

The AMWTP does not use hydrofluoric acid at the site. Although hydrofluoric acid was identified as a chemical used (for its intended purpose) during plutonium processing at some of the generator sites, AK indicates that only spent forms of hydrofluoric acid would have contaminated wastes from the generator sites. Based on this information, the U134 HWN does not apply to the Supercompactor squeezants.

The AMWTP does not generate waste that would be classified as K-listed waste. The Supercompactor squeezants are not hazardous waste from specific sources listed in

40 CFR 261.32. Based on this information, the K-listed HWNs do not apply to the Supercompactor squeezants.

- None of the Supercompactor feedstock debris wastes are discarded, unused, commercial chemical products, off-specification species, or manufacturing intermediates and do not contain spill residues thereof that would meet the listing of P- or U-listed hazardous waste as identified in 40 CFR 261.33. In addition, the wastes were not mixed with, or derived from, the treatment, storage, or disposal of P- or U-listed hazardous waste. Therefore, the Supercompactor squeezants waste is also not a P-, U- or K-listed hazardous waste and no P- or U-listed HWNs are assigned to the Supercompactor squeezants waste.[1, 6, 7, 8, 9, 27]

4.1.4.2 Identification of Radionuclides

The radionuclides expected in the Supercompactor squeezants waste originate from historically stored (i.e., RF, MD, BC, AE, AW, SD, and BL) debris waste as summarized in RPT-TRUW-07 and include radionuclides from offsite waste MFC (AW), LA and RL wastes. The WIPP-tracked radionuclides (^{238}Pu, ^{239}Pu, ^{240}Pu, ^{242}Pu, ^{233}U, ^{234}U, ^{238}U, ^{241}Am, ^{137}Cs, and ^{90}Sr) are expected to be present and measurable by NDA. The two most prevalent radionuclides expected in the majority of AMWTP squeezants are ^{239}Pu and ^{240}Pu. This is based on a review of the BN510.1 product drums; however, prevalent radioisotopes in some of the supercompacted debris waste product drums and, therefore in the squeezants, may be a combination of ^{239}Pu and a different second TRU or uranium isotope due to variability in the feedstock. (Section 3.7)

4.1.4.3 Identification of Prohibited Items

AMWTP TRU squeezants are liquid and prohibited from shipment to WIPP. The waste does not contain any other WIPP-prohibited items. Only liquids are placed into the squeezants bottles/jars. This liquid waste is treated by absorption and the absorbed squeezants waste is described in Section 5.1.

4.1.4.4 Identification of PCBs

Drums of Supercompactor debris waste feedstock identified during RTR/VE as containing PCB items are not included in the supercompacted debris waste stream. PCB items identified in boxed debris are removed during box line operations. The Box Line Polychlorinated Biphenyl (PCB) Management Plan establishes guidelines for the cleanup of PCBs that inadvertently enter the AMWTF Box Lines. PCB items and PCB-contaminated debris wastes from box line cleanup of spills are packaged as newly generated waste and are not authorized as Supercompactor debris waste feedstock and are removed from the acility. [150]

4.2 Liquids Segregated or Collected from Stored Waste

BN-528 and BN-529 information will be obtained and included in this document in the future after AK is obtained.

Table 4.2. Liquids segregated or collected from stored waste IDCs, waste descriptions, and generation dates.

IDC	Description	Generation Date
BN-528	TRU PCB Liquids	TBD
BN-529	TRU non-PCB Liquids	TBD

4.3 Liquids Generated from Maintenance Activities

BN-534 information will be obtained and included in this document in the future after AK is obtained.

Table 4.3. Liquids generated from maintenance activities waste IDC, waste description, and generation date.

IDC	Description	Generation Date
BN-534	Organic Liquid from Maintenance Activities	TBD

5.0 S3000 HOMOGENEOUS SOLIDS WASTE GROUP

5.1 Absorbed Squeezants

5.1.1 Waste Description

The S3000 homogeneous solids waste group includes absorbed squeezants waste generated from the treatment of squeezants waste. The absorbed squeezants waste is described in HWD 061604-01 and PK, as documented by the AMWTP Waste Services group. Liquids from Supercompactor feedstock debris waste containers are expressed during compaction (i.e., squeezants), and collected in the Supercompactor sump (Section 4.1). The squeezants are routinely removed from the sump and transferred to the SCW for storage and/or treatment. This waste is comprised of IDCs BN-507 and BN-514 as listed in Table 5.1, which also provides a description and the dates of generation.

Table 5.1. Absorbed squeezants IDCs, waste descriptions, and generation dates.

IDC	Description	Generation Date
BN-507	Absorbed Aqueous Squeezants	2003 – ongoing
BN-514	Absorbed Organic Squeezants	2003 – ongoing

BN-507 Absorbed Aqueous Squeezants: Aqueous squeezants from the Supercompactor that have been absorbed onto inorganic particulate absorbent materials (e.g., Aquaset®, Aquaset II-G® or other approved inorganic absorbents). [76]

BN-514 Absorbed Organic Squeezants: Organic squeezants from the Supercompactor that have been absorbed onto inorganic particulate absorbent materials (e.g., Micro-Cel® E, Petroset II-G®, Aquaset®, Aquaset II-G®, or other approved inorganic absorbents). [76]

5.1.2 Waste Generation

The liquid squeezants are packaged in 4-liter polyethylene bottles/jars. When taken into SCW for treatment, the liquid squeezant (IDC BN-518) bottles/jars are visually inspected to determine if the waste contains multiple phases (e.g., mercury, organic, aqueous). Multiphase liquids are separated by decanting each phase into separate bottles/jars (Section 3.6.5.2.2). [32] The containerized liquids are tested as follows:

- A chemical test strip is used to determine the type of liquid (i.e., organic or aqueous)
- The specific gravity of the liquid relative to distilled water is determined
- A liquid shake-out test is used to determine miscibility
- The pH is tested and the liquid neutralized as necessary. [32]

Sodium bicarbonate is used to neutralize aqueous liquids with pH less than 3. Sodium bisulfate is used to neutralize aqueous liquid with pH greater than 11.5. Prior to treatment the liquid is separated into two or more 1-gallon (4-liter) Nalgene bottles/jars as necessary to provide sufficient volume for the addition of absorbent. [32] Applicable absorbent material is added to each container to treat the liquid. Aquaset®, Aquaset II-G®, SP-400®, Micro-Cel® E, Petroset II-G®, and Hg Absorb are the only chemical absorbents used in absorption activities. Only Hg Absorb is used in mercury absorption activities in SCW. If liquid is present after absorbent addition and mixing, additional absorbent is mixed in, but no more than two additional times. Liquid absorption is not performed more than three times per container, without contacting the shift supervisor. When treatment is complete the bottles/jars are double- or triple-bagged out of the glovebox and placed into 55-gallon drums (Section 3.6.5.4.2). [32]

5.1.2.1 Areas and/or Building from which the Waste was Generated

The absorbed squeezants are generated in the WMF-676 SCW glovebox system.

5.1.2.2 Process Flow Diagrams

The process flow diagram for absorbed squeezants waste is presented in Figure 5.

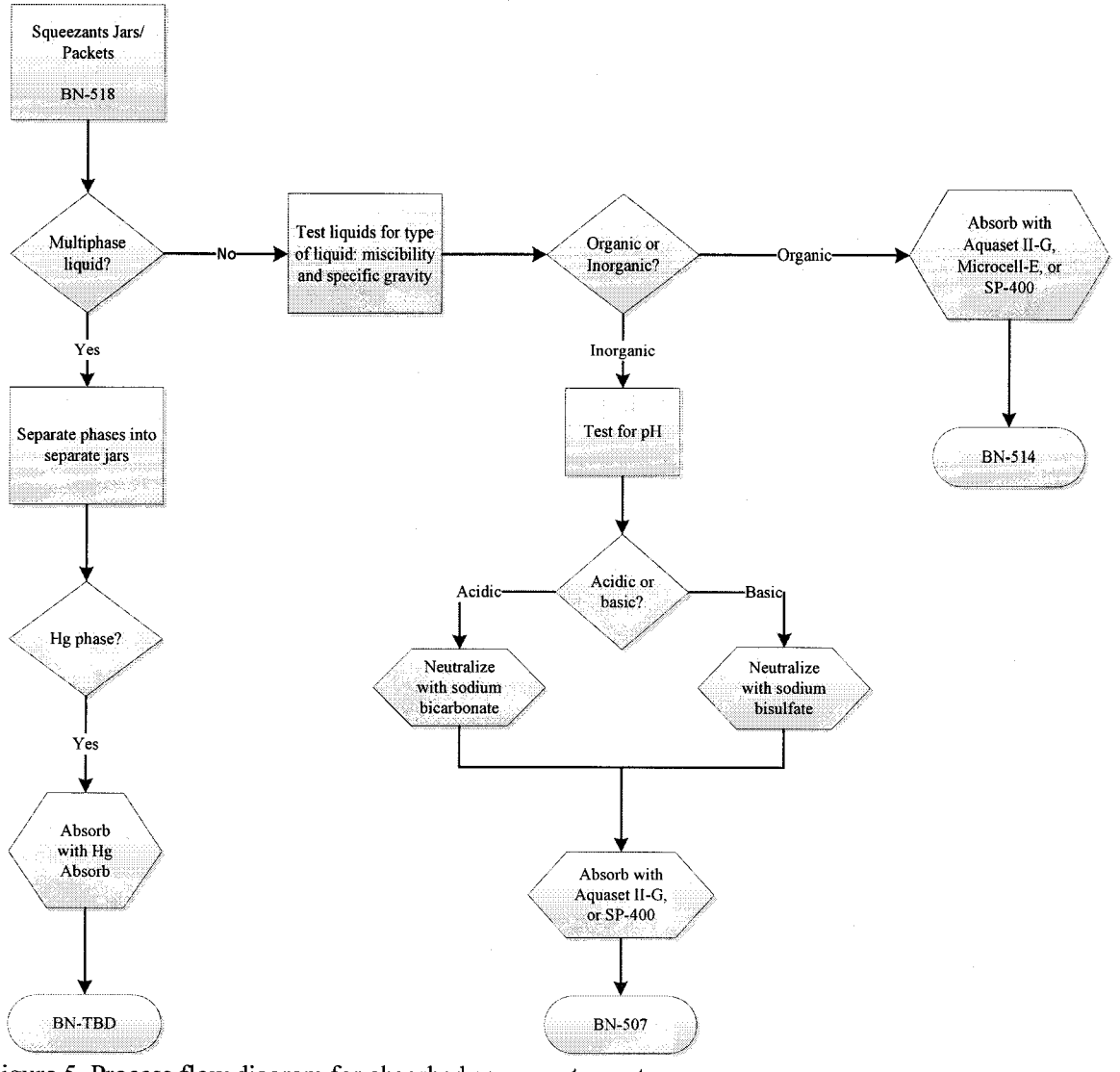

Figure 5. Process flow diagram for absorbed squeezants waste.

5.1.2.3 Material Inputs

The material inputs to the absorbed squeezants are aqueous and organic liquids from Supercompactor debris feedstock waste containers collected from the Supercompactor sump, neutralization agents (e.g., sodium bicarbonate, sodium bisulfate), and approved particulate absorbent material(s) (e.g., Aquaset®, Aquaset II-G®, Micro-Cel® E, SP-400®, Petroset II-G®, and Hg Absorb).

Material inputs are identified during various activities including, but not limited to, input from VE and/or RTR and information provided by the AMWTP waste generator and the AMWTP Waste Services HWD and PK.

5.1.2.4 Waste Volume

The absorbed squeezants waste is generated at a rate of 20 to 40 drums per year. See AMWTP WTS for current up-to-date volumes for each IDC. [124]

5.1.3 Waste Packaging

Absorbed squeezants are packaged in 4-liter Nalgene bottles/jars, triple bagged and approximately 20 bottles/jars are packaged per 55-gallon drum with up to 2 bag liners. [25, 124]

5.1.4 Waste Characterization

The AMWTP approach to characterization is described in Section 3.9. Absorbed squeezants have historically been managed as mixed waste. The AK for absorbed squeezants waste is based on PK, authorized feedstock to the Supercompactor and an applicable Waste Services HWD. AK characterization is augmented by VE, RTR and NDA. Waste constituents and HWNs assigned to the absorbed squeezants waste are identified by the AMWTP Waste Services group: HWD 061604-01. The absorbed squeezants HWNs/constituents may change over time due to changes in the feedstock authorized for supercompaction. Waste constituents and HWNs assigned to squeezants waste are identified in the Waste Services HWD. [16, 17, 18, 20, 21, 122, 124, 189, 190, 191, 192]

The absorbed squeezants 4-liter Nalgene bottles/jars are VE during treatment in the SCW glovebox to verify absorption. The bottles/jars of absorbed squeezants are bagged out of the glovebox and packaged into 55-gallon drums. Absorbed squeezants waste drums are examined by RTR and assayed. [124]

5.1.4.1 U.S. Environmental Protection Agency Hazardous Waste Number Assignments

Newly generated absorbed squeezants waste HWNs/constituents may be based on one or more of the following: PK, the RCRA mixture and derived-from rules, generator input, authorized Supercompactor feedstock HWNs. The characterization results are documented in an applicable Waste Services HWD. Waste constituents and HWNS assigned to the absorbed squeezants waste are identified in the Waste Services HWD. [5, 16, 17, 18, 20, 21, 122, 124, 189, 190, 191, 192]

5.1.4.1.1 Ignitability

The newly generated absorbed squeezants waste does not meet the 40 CFR 261.21, Characteristic/definition of Ignitability, definition of ignitability. The newly generated absorbed squeezants wastes are not a liquid, an ignitable compressed gas, or an oxidizer. Finally, the waste is not capable of causing fire through friction, absorption of moisture, or spontaneous chemical change. Containers that are identified as having prohibited liquids may be treated using Aquaset®, Aquaset II-G®, Petroset II®, Petroset IIG®, Micro-Cel® E, PIG®, or SP-400® absorbents to ensure that the waste is acceptable for disposal at WIPP. [130, 131, 132, 133, 162] The

newly generated absorbed squeezants waste does not exhibit the characteristic of ignitability (D001). (5, 16, 17, 18, 20, 122, 130, 132, 133, 143, 144, 145, 189, 190, 191, 192)

5.1.4.1.2 Corrosivity

The newly generated absorbed squeezants waste does not meet the 40 CFR 261.22, Characteristic of Corrosivity, definition of corrosivity. The absorbed squeezants waste is not liquid waste and does not contain liquids in excess of WIPP-WAC limits. Containers that are identified as having prohibited liquids may be treated using Aquaset®, Aquaset II-G®, Petroset II®, Petroset IIG®, Micro-Cel® E, PIG®, or SP-400® absorbents to ensure that the waste is acceptable for disposal at WIPP.(130, 131, 132, 133, 162) The newly generated absorbed squeezants waste does not exhibit the characteristic of corrosivity (D002). (5, 16, 17, 18, 20, 122, 130, 132, 133, 143, 144, 145, 189, 190, 191, 192)

5.1.4.1.3 Reactivity

The newly generated absorbed squeezants waste does not meet the 40 CFR 261.23 definition of reactivity. The absorbed squeezants waste is not a liquid waste.

The absorbed squeezants waste is stable and will not undergo violent chemical change, react violently with water, form potentially explosive mixtures with water, or generate toxic gases, vapors, or fumes when mixed with water. The waste does not contain sulfide waste, which when exposed to a pH between 2 and 12.5, can generate toxic gases, vapors, or fumes in a quantity sufficient to present a danger to human health or the environment. The waste is not capable of detonation or explosive reaction if subjected to a strong initiating source if heated under confinement. The waste is not readily capable of detonation or explosive decomposition or reaction at standard temperature and pressure. The materials do not contain explosive material and are not forbidden explosives or Division 1.1, 1.2, or 1.3 (Class A or B) explosives as defined in 49 CFR 173. Although the waste may contain wastes that are assigned F006, F007, and F009 listed HWNs that are associated with cyanide electroplating operations, the waste when exposed to a pH between 2 and 12.5 will not generate toxic gases, vapors, or fumes in a quantity sufficient to present a danger to human health or the environment. This waste does not exhibit the characteristic of reactivity (D003).(16, 17, 18, 20, 122, 143, 144, 145, 189, 190, 191, 192)

Any containers that are identified as having prohibited liquid may be treated using: Aquaset®, Aquaset II-G®, Petroset II® or Petroset IIG®, Micro-Cel® E, PIG®, or SP-400® absorbents to ensure that the waste is acceptable for disposal at WIPP. (130, 131, 132, 133, 162)

5.1.4.1.4 Toxicity Characteristic

The AMWTP absorbed squeezants waste may meet the definition of toxicity for metals and organics as defined in 40 CFR 261.24. Assignment of the RCRA toxicity characteristic metals and organics HWNs to the absorbed squeezants is based on PK and AK associated with the supercompacted waste. Waste constituents and HWNs assigned to the absorbed squeezants waste are identified in the Waste Services HWD. (125, 189, 190, 191, 192)

5.1.4.1.5 Listed Waste

5.1.4.1.5.1 F-Listed HWNs

The absorbed squeezants waste is listed hazardous waste.

The applicable RCRA HWNs and hazardous constituents for the absorbed squeezants waste are assigned based on the RCRA-derived-from rule and PK and AK associated with the Supercompactor feed waste. The addition of absorbent material and/or neutralization agents does not add additional characteristic or listed hazardous waste to the absorbed TRU squeezants waste.

Waste constituents and HWNs assigned to the absorbed squeezants waste are identified in the Waste Services HWD. See Waste Services HWD for up-to-date HWNs. [189, 190, 191, 192]

5.1.4.1.5.2 P-, U- and K-Listed HWNs:

- The absorbed squeezants waste is not currently a P-, U- or K-listed hazardous waste.
- None of the Supercompactor feedstock debris wastes are discarded, unused, commercial chemical products, off-specification species, or manufacturing intermediates and do not contain spill residues thereof that would meet the listing of P- or U-listed hazardous waste as identified in 40 CFR 261.33. In addition, the wastes were not mixed with, or derived from, the treatment, storage, or disposal of P- or U-listed hazardous waste.
- The squeezants are assumed to be contaminated with less than 1% by weight beryllium. The AMWTP does not use commercial chemicals containing beryllium powder. Although absorbed squeezants may contain beryllium contamination, the beryllium contamination is only associated spent forms of beryllium; it is not associated with commercial chemical product, an off-specification species, a manufacturing intermediate, a container residue, or a spill residue thereof. Based on this information, the P015 HWN does not apply to the absorbed squeezants.

The AMWTP does not use hydrofluoric acid at the site. Although hydrofluoric acid was identified as a chemical used (for its intended purpose) during plutonium processing at some of the generator sites, AK indicates that only spent forms of hydrofluoric acid would have contaminated wastes from the generator sites. Based on this information, the U134 HWN does not apply to the absorbed squeezants.

- The AMWTP does not generate waste that would be classified as K-listed hazardous waste. The TRU homogeneous solids are not hazardous waste from specific sources listed in 40 CFR 261.32. Based on this information, the K-listed HWNs do not apply to the absorbed squeezants.
- Therefore, the absorbed squeezants waste is also not a P-, U- or K-listed hazardous waste and no P- or U-listed HWNs are assigned to the absorbed Supercompactor liquid waste.[1, 6, 7, 8, 9, 27]

5.1.4.2 Radionuclide Content

The radionuclides expected in the absorbed squeezants waste are summarized in RPT-TRUW-07 and also include the radionuclides from BL debris waste. The WIPP-tracked radionuclides (^{238}Pu, ^{239}Pu, ^{240}Pu, ^{242}Pu, ^{233}U, ^{234}U, ^{238}U, ^{241}Am, ^{137}Cs, and ^{90}Sr) are expected to be present and measurable by NDA.

The two most prevalent radionuclides expected in the majority of AMWTP absorbed squeezants waste are ^{239}Pu and ^{240}Pu. This is based on a review of the BN510.1 product drums; however, prevalent radioisotopes in some of the supercompacted debris waste product drums and, therefore, in the absorbed squeezants, may be a combination of ^{239}Pu and a different second TRU or uranium isotope due to variability in the feedstock.

5.1.4.3 Prohibited Items

The absorbed squeezants wastes are not expected to contain WIPP PIs. AMWTP packaging procedures and AMWTP RTR and/or VE procedures are used to support the absence of PIs for newly generated waste. Drums containing WIPP-prohibited items will not be shipped to WIPP. Containers with WIPP-prohibited liquids may be treated using nonhazardous solidification agents (e.g., SP-400®, AquasetII-G®, Micro-Cel®E, Petroset II-G®, to render the waste acceptable prior to shipment.

5.1.4.4 Identification of PCBs

Drums of Supercompactor debris waste feedstock identified during RTR/VE as containing PCB items are not included in the supercompacted debris waste. PCB items identified in boxed debris are removed during box line operations. The Box Line Polychlorinated Biphenyl (PCB) Management Plan establishes guidelines for the cleanup of PCBs that inadvertently enter the AMWTF box lines.(150) PCB items and PCB-contaminated debris wastes from box line cleanup of spills are packaged as newly generated waste and are not authorized as Supercompactor debris waste feedstock and are removed from the Facility. PCB items and PCB-contaminated wastes removed from debris waste feedstock drums and boxes are packaged as newly generated waste and are not authorized as Supercompactor debris waste feedstock.

5.2 Homogeneous Solids

5.2.1 Waste Description

The homogeneous solids waste group includes homogeneous solids waste that is being managed as newly generated because the historically stored waste (Table 3.1) may have been cross-contaminated with other wastes during retrieval or characterization (e.g., VE). It also includes repackaged or intact containers of historically stored retrieved homogeneous solids waste with insufficient AK for a legacy IDC. Homogeneous solids waste that is collected during cleanouts and clean ups is also included in this waste. Homogeneous solids waste is described in HWDs 031411-01, 060519, 060509-02, 061010-01, 061504-02, 062309-09, 071511-01, 090810-02 and PK, as documented by the AMWTP Waste Services group. The homogeneous

solids waste is comprised of IDCs BN-505, BN-511, BN-513, and BN-516 as described in Table 5.2, which also provides the dates of generation for homogeneous solids wastes.

Table 5.2. TRU homogeneous solids IDCs, waste descriptions, and generation dates.

IDC	Description	Generation Date
BN-505	Inorganic Homogeneous Solids	2003 – ongoing
BN-511	PCB Organic Homogeneous Solids	TBD
BN-513	Non-PCB Organic Homogeneous Solids	2006 – ongoing
BN-516	AMWTP Inorganic Homogeneous Solids	2011 – ongoing

BN-505 Inorganic Homogeneous Solids: Loose or cross-contaminated inorganic homogeneous solids derived from historically stored waste (e.g., sludges, salts, ash, heels, special setups, or other process residual solids including absorbents) repackaged during retrieval, characterization, treatment, storage, and other waste management activities conducted at the AMWTP. Also may include inorganic homogeneous solids generated by AMWTP as a result of repackaging loose homogeneous solids from breached containers. Waste may include repackaged or intact containers of historically stored inorganic homogeneous solids waste with insufficient AK information to assign a legacy IDC. Waste may also contain <50% by volume debris (metal cans, plastic bottles, etc.) and soils. (76)

BN-511 PCB Organic Homogeneous Solids: Loose or cross-contaminated organic homogeneous solids derived from historically stored waste (e.g., organic setups IDCs RF-003 or RF-743) repackaged during retrieval, characterization, treatment, storage, and other waste management activities conducted at the AMWTP that may be or are contaminated with PCBs. This also may include homogeneous solids generated by AMWTP as a result of repackaging loose homogeneous solids from breached containers that are suspected of being PCB-contaminated. It also includes repackaged or intact containers of historically stored homogeneous solids waste with insufficient AK information to assign a legacy IDC. Waste may also contain <50% by volume soils (e.g., interstitial soil) or debris (metal cans, plastic bottles, etc). (76)

BN-513 Non-PCB Organic Homogeneous Solids: Loose or cross-contaminated organic homogeneous solids derived from historically stored waste (e.g., organic sludges) repackaged during retrieval, characterization, treatment, storage, and other waste management operations conducted at the AMWTP. Also may include homogeneous solids generated by AMWTP as a result of repackaging loose organic homogeneous solids from breached containers. Waste may include repackaged or intact containers of historically stored organic homogeneous solids waste with insufficient AK information to assign a legacy IDC. Waste may also contain <50% by volume debris (e.g., metal cans, plastic bottles, etc.) or soils. (76)

BN-516 AMWTP Inorganic Homogeneous Solids: Inorganic homogeneous solids generated from general operation and maintenance activities conducted at the AMWTF. The primary process is cleanup of the 1st floor of the facility and cleanup of the Supercompactor glovebox area. The waste consists of dust buildup material on the 1st floor and a mixture of paint

flakes, solid waste, and dried squeezants material at the Supercompactor. Solids are also generated as metal oxides from plasma cutting operations and collected during cleanup of the Brokk pedestal area. Waste may also contain <50% by volume debris that cannot be practically separated from the waste.

5.2.2 Waste Generation

Homogeneous solids (Table 3.1) are generated as a result of (but not limited to) the following:

- Homogeneous solids waste that is cross-contaminated with other wastes during VE to confirm RTR in the WMF-676 DWPG (Section 3.6.4.2)
- Small containers of homogeneous solids waste that is cross-contaminated with other wastes and is segregated from debris waste in the Supercompactor (S/C) box lines during the VE process (Sections 3.6.4.2 and 3.6.5.1.1)
- Homogeneous solids waste that is cross-contaminated with other wastes and is repackaged during retrieval of historically stored waste (Section 3.6.1.2).
- Homogeneous solids waste that is not commingled with other wastes and is repackaged during retrieval of historically stored waste (Section 3.6.1.2).
- Intact containers with insufficient AK information include containers retrieved during retrieval of historically stored waste (Section 3.6.1.2).
- Homogeneous solids waste that is collected during quarterly cleanup of the box line areas in the facility (Section 3.6.3.2.4).
- Homogeneous solids waste that is collected during cleanup of the Brokk pedestal area in the facility (Section 3.6.3.3.1).
- Homogeneous solids waste that is collected during cleanup of the Supercompactor glovebox area in the facility (Section 3.6.3.3).
- Homogeneous solids waste that is generated during plasma cutting in the size reduction area in the facility (Section 3.6.5.2).

Homogeneous solids derived from PCB wastes are assigned IDC BN-511. Homogeneous solids not derived from PCB wastes are assigned IDC BN-505, IDC BN-513, or BN-516 based on physical form (organic versus inorganic matrix). Homogeneous solids waste associated with containers with insufficient AK information or a PCB determination are assigned IDC BN-511 to reflect the most conservative characterization.

5.2.2.1 Areas and/or Buildings

The homogeneous solids that may be cross-contaminated during characterization are generated in the WMF-676 DWPG (Section 3.6.4.2). Homogeneous solids are generated during segregation in WMF-676 box line (Section 3.6.5.1.1) or cleanout and maintenance of the box line areas, containment systems, and Supercompactor glovebox area (Section 3.6.3 and 3.6.5). The homogeneous solids loose waste that is repackaged during retrieval is generated in the WMF-636 TSA-RE (Section 3.6.1.2). The homogeneous solids in intact containers are retrieved from historical storage. Releases involving homogeneous solids in other areas at AMWTP may also result in the generation of homogeneous solids if cross contamination occurs.

5.2.2.2 Process Flow Diagram

The process flow diagram for TRU homogeneous solids is presented in Figure 6.

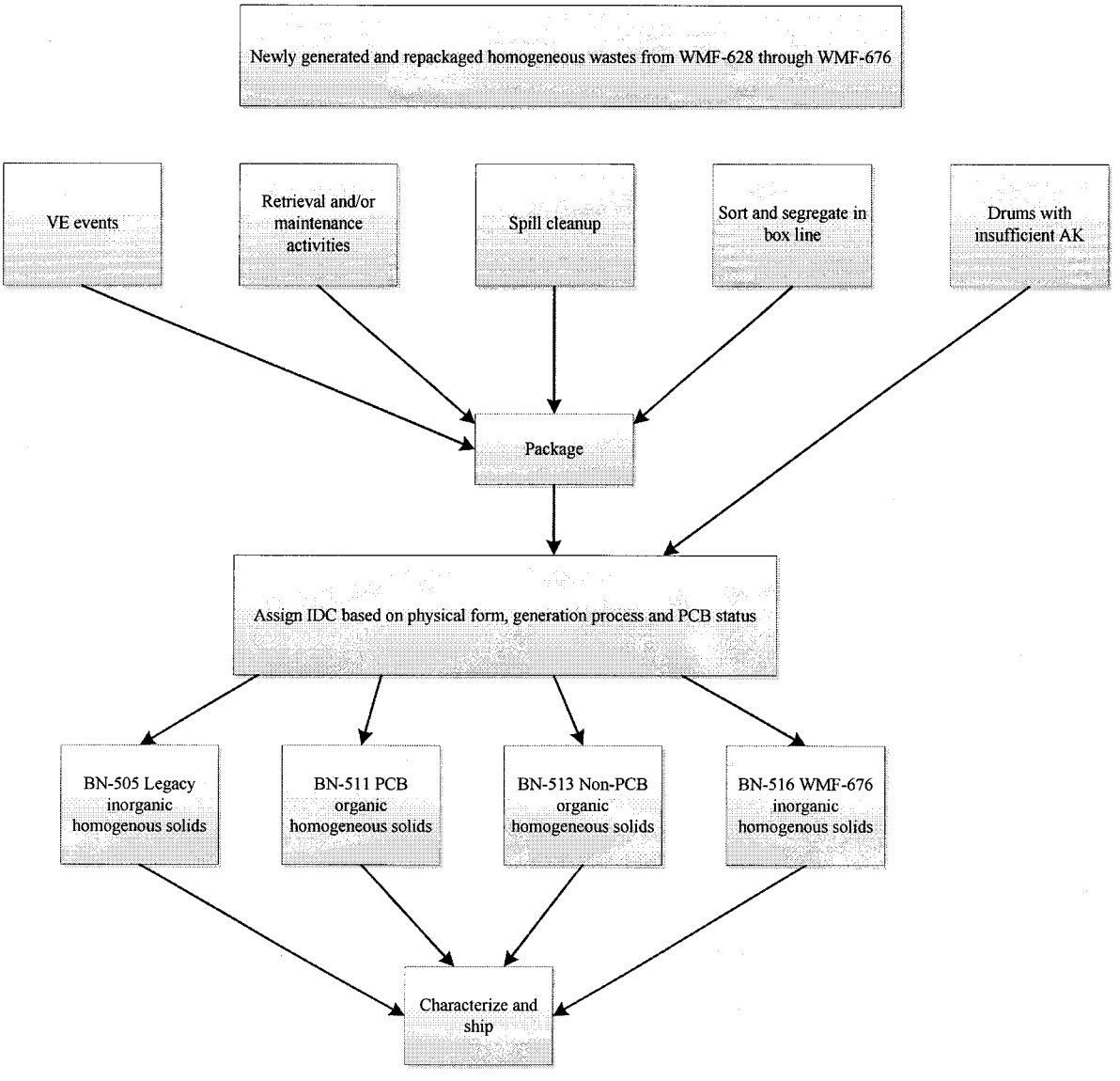

Figure 6. Process flow diagram for homogeneous solids waste.

5.2.2.3 Material Inputs

The material inputs to homogenous solids wastes are dependent on the type of waste and the generator of the waste being retrieved. Material inputs are identified during various activities including, but not limited to input from VE and/or RTR and information provided by related generator AK summary reports, the AMWTP waste generator, and the AMWTP Waste Services HWDs and PK.

5.2.2.4 Waste Volume

See AMWTP WTS for current up-to-date volumes for each IDC. Generation rates will be provided by the generator at the time of WIPP profiling, if generation is on-going.

5.2.3 Waste Packaging

The homogeneous solids are repackaged in 55-gallon drums with up to 2 bag liners. The waste may either be loose waste that is direct loaded into drums (typically performed in WFM-636 TSA-RE) or be comprised of waste packaged in small containers (plastic bottles or metal cans) by the original generator that are repackaged into a drum (typically performed in WFM-676 SCW). The accumulated dust is placed in an approved container, bagged and placed in a drum. [25, 33, 151] The homogeneous solids may also include a variety of legacy waste packaging configurations (e.g., rigid liners, up to two drum bags, and/or inner bottles, cans, or cartons with up to two small bags). These drums may be overpacked into 83- or 100-gallon drums or standard waste box. [25, 76, 155]

5.2.4 Waste Characterization

The AMWTP approach to characterization is described in Section 3.9. The waste has been historically managed as mixed wastes. The AK for homogeneous solids waste is based on generator AK summary reports, PK and Waste Services HWDs. AK characterization is augmented by VE, RTR and NDA. Waste constituents and HWNs assigned to the homogeneous solids waste are identified in the Waste Services HWDs. Waste constituents and HWNs assigned to the homogeneous solids waste are identified in the Waste Services HWDs.

5.2.4.1 Identification of EPA HWNs

Newly generated AMWTP homogeneous solids waste HWNs/constituents may be based on one or more of the following: related generator AK summary reports, PK, the RCRA mixture and derived-from rules, generator input, Waste Services determinations. The characterization results are documented in the applicable Waste Services HWDs. Waste constituents and HWNs assigned to the homogeneous solids waste are identified in the Waste Services HWDs. [5, 189, 190, 191, 192]

5.2.4.1.1 Ignitability

The newly generated homogeneous solids wastes do not meet the 40 CFR 261.21 definition of ignitability. The newly generated homogeneous solids wastes are not a liquid, an ignitable compressed gas, or an oxidizer. Finally, the waste is not capable of causing fire through friction, absorption of moisture, or spontaneous chemical change. Containers that are identified as having prohibited liquids may be treated using Aquaset®, Aquaset II-G®, Petroset II®, Petroset IIG®, Micro-Cel® E, PIG®, or SP-400® absorbents to ensure that the waste is acceptable for disposal at WIPP.[130, 131, 132, 133, 162] The newly generated homogeneous solids waste does not exhibit the characteristic of ignitability (D001).[5, 16, 17, 18, 20, 122, 130, 132, 133, 143, 144, 145]

5.2.4.1.2 Corrosivity

The newly generated homogeneous solids waste does not meet the 40 CFR 261.22, Characteristic of Corrosivity, definition of corrosivity. The absorbed liquids waste is not liquid waste and does not contain liquids in excess of WIPP-WAC limits. Containers that are identified as having prohibited liquids may be treated using Aquaset®, Aquaset II-G®, Petroset II®, Petroset IIG®, Micro-Cel® E, PIG®, or SP-400® absorbents to ensure that the waste is acceptable for disposal at WIPP.[130, 131, 132, 133, 162] The newly generated homogeneous solids waste does not exhibit the characteristic of corrosivity (D002).[5, 16, 17, 18, 20, 122, 130, 132, 133, 143, 144, 145]

5.2.4.1.3 Reactivity

The newly generated homogeneous solids waste does not meet the 40 CFR 261.23 definition of reactivity. The homogeneous solids waste is not a liquid waste.

The homogeneous solids waste is stable and will not undergo violent chemical change, react violently with water, form potentially explosive mixtures with water, or generate toxic gases, vapors, or fumes when mixed with water. The waste does not contain sulfide waste which, when exposed to a pH between 2 and 12.5, can generate toxic gases, vapors, or fumes in a quantity sufficient to present a danger to human health or the environment. The waste is not capable of detonation or explosive reaction if subjected to a strong initiating source if heated under confinement. The waste is not readily capable of detonation or explosive decomposition or reaction at standard temperature and pressure. The materials do not contain explosive material and are not forbidden explosives or Division 1.1, 1.2, or 1.3 (Class A or B) explosives as defined in 49 CFR 173. Although the waste may contain wastes that are assigned F006, F007, and F009 listed HWNs that are associated with cyanide electroplating operations, the waste when exposed to a pH between 2 and 12.5 will not generate toxic gases, vapors, or fumes in a quantity sufficient to present a danger to human health or the environment. This waste does not exhibit the characteristic of reactivity (D003).[16, 17, 18, 20, 122, 143, 144, 145]

Any containers that are identified as having prohibited liquid may be treated using: Aquaset®, Aquaset II-G®, Petroset II® or Petroset IIG®, Micro-Cel® E, PIG®, or SP-400® absorbents to ensure that the waste is acceptable for disposal at WIPP.[130, 131, 132, 133, 162]

5.2.4.1.4 Toxicity Characteristic

The homogeneous solids may meet the definition of toxicity for metals and organics. Waste constituents and HWNs assigned to the homogeneous solids waste are identified in the applicable Waste Services HWDs.

5.2.4.1.5 Listed Waste

5.2.4.1.5.1 F-Listed HWNs

The homogeneous solids may meet the definition for an F-listed hazardous waste. Waste constituents and HWNs assigned to the homogeneous solids waste are identified in the applicable Waste Services HWDs.

5.2.4.1.5.2 P-, U- and K-Listed HWNs

Newly generated homogeneous solids waste does not currently meet the definition of a P-, or K-listed waste. Waste constituents and HWNs assigned to the homogeneous solids waste are identified in the Waste Services HWDs. [31] The homogeneous solids are not currently classified as a P-, U- or K-listed hazardous waste.

The AMWTP does not use commercial chemicals containing beryllium powder. Although homogeneous solids may contain beryllium contamination (including wastes derived from IDC RF-800 which may contain greater than 1.0 wt% beryllium), the beryllium contamination is only associated spent forms of beryllium; it is not associated with commercial chemical product, an off-specification species, a manufacturing intermediate a container residue, or a spill residue thereof. Based on this information, the P015 HWN does not apply to the homogeneous solids.

The AMWTP does not use hydrofluoric acid at the site. Although hydrofluoric acid was identified as a chemical used (for its intended purpose) during plutonium processing at some of the generator sites, AK indicates that only spent forms of hydrofluoric acid would have contaminated wastes from the generator sites. Based on this information, the U134 HWN does not apply to the homogeneous solids.

The AMWTP does not generate waste that would be classified as K-listed hazardous waste. The homogeneous solids are not hazardous waste from specific sources listed in 40 CFR 261.32. Based on this information, the K-listed HWNs do not apply to the homogeneous solids.

5.2.4.2 Radionuclide Content

The radionuclides expected to be quantifiable or calculated by NDA technique in homogeneous solids waste derived from historical stored wastes are summarized in RPT-TRUW-07. Other radionuclides identified in the waste are also summarized in RPT-TRUW-07. Radionuclides from other historically stored waste generators may also contribute the TRU homogeneous solids (RPT-TRUW-07). [83]

5.2.4.3 Prohibited Items

The homogeneous solids are not expected to contain WIPP-prohibited items. AMWTP packaging procedures and AMWTP RTR and/or VE procedures are used to support the absence of prohibited items for newly generated waste. Drums containing prohibited items will not be shipped to WIPP. Containers with WIPP-prohibited liquids may be treated using nonhazardous solidification agents (e.g., SP-400®, Aquaset II-G®, Micro-Cel® E, Petroset II-G®) to render the waste acceptable prior to shipment. Other PIs (e.g., sealed containers greater than 4 liters) will be treated to render the waste acceptable prior to shipment.

5.2.4.4 Identification of PCBs

The homogeneous solids contaminated with PCB wastes (e.g., waste identified as, or commingled with, RF organic setup wastes) are assigned IDC BN-511. IDC BN-505 or IDC BN-513, and BN-516 are assigned to homogeneous solids that are not derived from PCB wastes.

5.3 Absorbed Liquids

5.3.1 Waste Description

The absorbed liquids waste includes waste generated as a result of absorbing liquids from maintenance and cleanup activities and liquids derived from historically stored waste. This also includes absorbed liquids generated from a high contamination area or has come in direct contact with primary waste. The waste is described in HWDs 061509-01, 020905-02, and 030707-01 and PK, as documented by the AMWTP Waste Services group. This waste includes containerized prohibited liquids that are absorbed in the WMF-676 SCW that are segregated from historically stored containers (Sections 3.6.5.1.2 and 3.6.5.4.2). This waste is comprised of IDCs BN-509, BN-515, and BN-605 as described in Table 5.3 which also provides the dates of generation for absorbed liquids.

Table 5.3. TRU absorbed liquid IDCs, waste descriptions, and generation dates.

IDC	Description	Generation Date
BN-509	Absorbed Organic Liquids (Excluding Squeezants)	TBD
BN-515	Absorbed Aqueous Liquids (Excluding Squeezants)	TBD
BN-605	Absorbed Liquids Toxic Substances Control Act (TSCA)/PCB	TBD

BN-509 Absorbed Organic Liquids (Excluding Squeezants): Organic liquids derived from waste containers that are not PCB-contaminated and that were treated using an inorganic particulate absorbent material (e.g., Micro-Cel® E, Petroset II-G®, Aquaset II-G®, or SP-400®). The absorbed organic liquids include prohibited containerized liquids removed and absorbed at SCW. This also includes absorbed organic liquids from maintenance activities and spill cleanups.

BN-515 Absorbed Aqueous Liquids (Excluding Squeezants): Aqueous liquids derived from waste containers that were treated using an inorganic particulate absorbent material

(e.g., Aquaset II-G®, Micro-Cel® E, or SP-400®). The absorbed aqueous liquids include prohibited containerized liquids removed and absorbed at SCW. This also includes absorbed aqueous liquids from maintenance activities and spill cleanups.

BN-605 Absorbed Liquids TSCA/PCB: Organic or aqueous PCB liquids derived from waste containers that were treated using an inorganic particulate material (e.g., Aquaset®, Petroset®, Micro-Cel® E, or other inorganic particulate absorbent material approved by EPA). The absorbed organic or aqueous PCB liquids include prohibited containerized liquids removed and absorbed at SCW. This also includes absorbed PCB liquids from maintenance activities and spill cleanups.

5.3.2 Waste Generation

The absorbed liquids waste includes waste generated as a result of absorbing liquids from maintenance and cleanup activities and liquids derived from historically stored waste. This also includes absorbed liquids generated from a high contamination area or has come in direct contact with primary waste. This also includes absorbed liquids from maintenance activities and spill cleanups. (Sections 3.6.5.1.2 and 3.6.5.4.2) This waste includes containerized prohibited liquids that are segregated from historically stored containers that are subsequently treated in SCW (Sections 3.6.5.1.2 and 3.6.5.4.2).

The absorbed liquids derived from PCB waste are assigned IDC BN-605. The absorbed liquids not derived from PCB waste are assigned either IDC BN-509 or IDC BN-515 based on physical form (organic versus inorganic matrix).

5.3.2.1 Areas and/or Buildings

The absorption of containerized prohibited liquids or prohibited liquids drained from waste items is performed in WMF-676 SCW (Section 3.6.5.4.2). The absorbed liquids generated from a high contamination area or that has come in direct contact with primary waste can occur throughout the AMWTP area but is primarily from maintenance and cleanup activities (Sections 3.6.5.1.2 and 3.6.5.4.2).

5.3.2.2 Process Flow Diagram

The process flow diagram for TRU absorbed liquids (excluding squeezants) is presented in Figure 7.

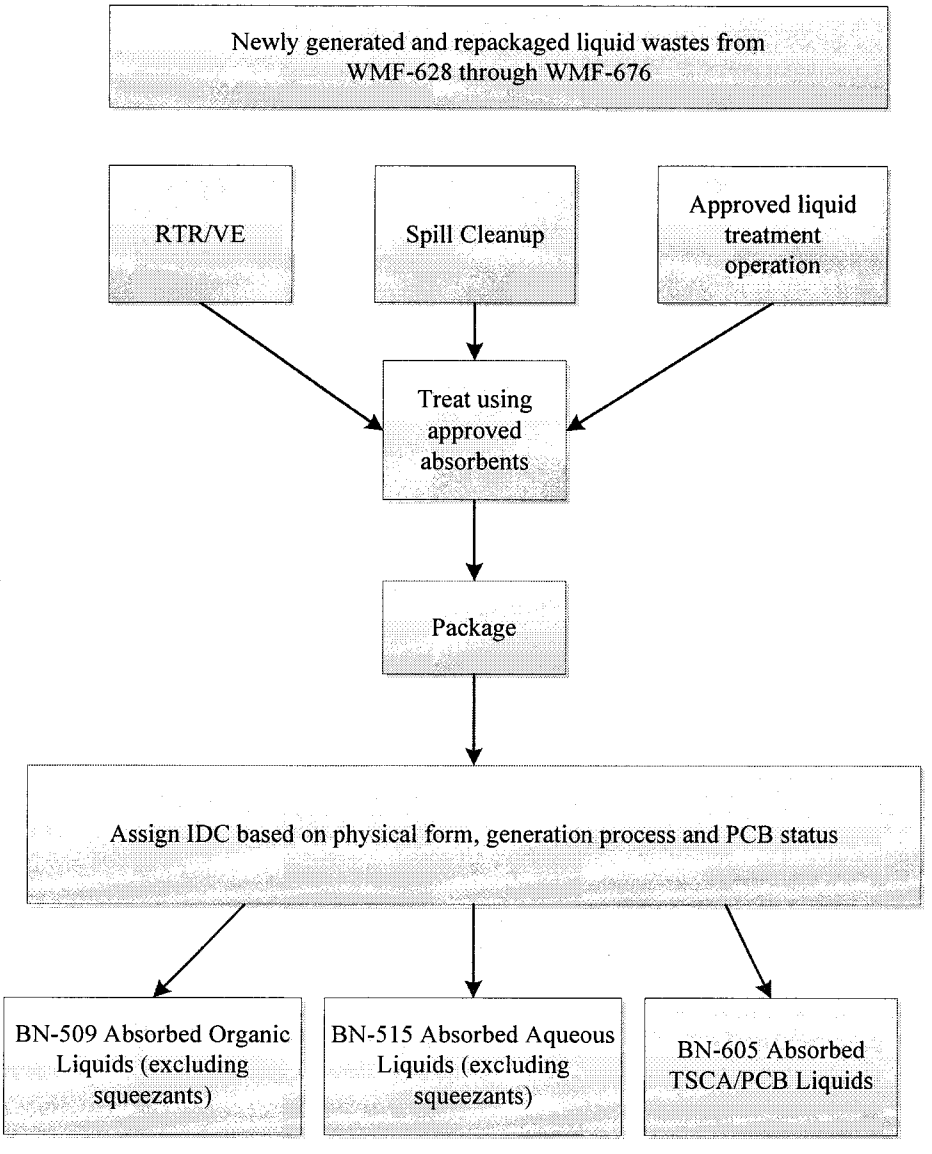

Figure 7. Process flow diagram for absorbed liquids (excluding squeezants).

5.3.2.3 Material Inputs

Material inputs are identified by various activities including, but not limited to, input from VE and/or RTR and information provided by the AMWTP waste generator, related generator AK summary reports, and the AMWTP Waste Services HWD and PK. The material inputs to absorbed liquids wastes are dependent on the type and generator of the liquids being absorbed including, but limited to, liquids derived from containers of historically stored waste and containerized prohibited liquids/liquids drained from waste items. SP-400®, Aquaset II-G®, Micro-Cel® E, Petroset II-G®, or other approved inorganic particulate absorbents may be used to absorb the prohibited liquids.

5.3.2.4 Waste Volume

See AMWTP WTS for current up-to-date volumes for each IDC within this waste group. Generation rates will be provided by the generator at the time of WIPP profiling, if generation is on-going.

5.3.3 Waste Packaging

The absorbed liquids are packaged in 55-gallon drums with rigid liner or up to 2 drum bags (for small containers of absorbed liquids generated in WMF-676 SCW). [25, 76]

5.3.4 Waste Characterization

The AMWTP approach to characterization is described in Section 3.9. The waste has been historically managed as mixed wastes. The AK for absorbed liquids waste is based on related generator AK summary reports, PK, and Waste Services HWDs. AK characterization is augmented by VE, RTR and NDA. Waste constituents and HWNs assigned to the absorbed liquids waste are identified in the applicable Waste Services HWDs. [31]

5.3.4.1 Identification of EPA HWNs

Newly generated AMWTP absorbed liquids waste HWNs/constituents may be based on one or more of the following: PK, the RCRA mixture and derived-from rules, generator input, related generator AK summary reports, Waste Services determinations. The characterization results are documented in Waste Services HWDs. Waste constituents and HWNs assigned to the absorbed liquids waste are identified in the Waste Services HWDs. [5, 31]

5.3.4.1.1 Ignitability

The newly generated absorbed liquids wastes do not meet the 40 CFR 261.21 definition of ignitability. The newly generated absorbed liquids wastes are not a liquid, an ignitable compressed gas, or an oxidizer. Finally, the waste is not capable of causing fire through friction, absorption of moisture, or spontaneous chemical change. Containers that are identified as having prohibited liquids may be treated using Aquaset®, Aquaset II-G®, Petroset II®, Petroset IIG®, Micro-Cel® E, PIG®, or SP-400® absorbents to ensure that the waste is acceptable for disposal at WIPP. [130, 131, 132, 133, 162] The newly generated absorbed liquids waste does not exhibit the characteristic of ignitability (D001). [5, 16, 17, 18, 20, 122, 130, 132, 133, 143, 144, 145]

5.3.4.1.2 Corrosivity

The newly generated absorbed liquids waste does not meet the 40 CFR 261.22, Characteristic of Corrosivity, definition of corrosivity. The absorbed liquids waste is not liquid waste and does not contain liquids in excess of WIPP-WAC limits. Containers that are identified as having prohibited liquids may be treated using Aquaset®, Aquaset II-G®, Petroset II®, Petroset IIG®, Micro-Cel® E, PIG®, or SP-400® absorbents to ensure that the waste is acceptable for

disposal at WIPP.[130, 131, 132, 133, 162] The newly generated absorbed liquids waste does not exhibit the characteristic of corrosivity (D002). [5, 16, 17, 18, 20, 122, 130, 132, 133, 143, 144, 145]

5.3.4.1.3 Reactivity

The newly generated absorbed liquids waste does not meet the 40 CFR 261.23 definition of reactivity. Absorbed liquids waste is not a liquid waste.

The absorbed liquids waste is stable and will not undergo violent chemical change, react violently with water, form potentially explosive mixtures with water, or generate toxic gases, vapors, or fumes when mixed with water. The waste does not contain sulfide waste which, when exposed to a pH between 2 and 12.5, can generate toxic gases, vapors, or fumes in a quantity sufficient to present a danger to human health or the environment. The waste is not capable of detonation or explosive reaction if subjected to a strong initiating source if heated under confinement. The waste is not readily capable of detonation or explosive decomposition or reaction at standard temperature and pressure. The materials do not contain explosive material and are not forbidden explosives or Division 1.1, 1.2, or 1.3 (Class A or B) explosives as defined in 49 CFR 173. Although the waste may contain wastes that are assigned F006, F007, and F009 listed HWNs that are associated with cyanide electroplating operations, the waste when exposed to a pH between 2 and 12.5 will not generate toxic gases, vapors, or fumes in a quantity sufficient to present a danger to human health or the environment. This waste does not exhibit the characteristic of reactivity (D003). [16, 17, 18, 20, 122, 143, 144, 145]

Any containers that are identified as having prohibited liquid may be treated using: Aquaset®, Aquaset II-G®, Petroset II® or Petroset IIG®, Micro-Cel® E, PIG®, or SP-400® absorbents to ensure that the waste is acceptable for disposal at WIPP. [130, 131, 132, 133, 162]

5.3.4.1.4 Toxicity Characteristic

The absorbed liquids may meet the definition of toxicity for metals and organics. Waste constituents and HWNs assigned to the absorbed liquids waste are identified in the Waste Services HWDs. [31]

5.3.4.1.5 Listed Waste

5.3.4.1.5.1 F-Listed HWNs

The absorbed liquids may meet the definition for an F-listed hazardous waste. Waste constituents and HWNs assigned to the absorbed liquids waste are identified in the Waste Services HWDs. [31]

5.3.4.1.5.2 P-, U- and K-Listed HWNs

Newly generated absorbed liquids waste does not currently meet the definition for a P-, U- or K-listed hazardous waste. Waste constituents and HWNs assigned to the absorbed liquids waste are identified in the Waste Services HWDs. [31]

The absorbed liquids are not currently classified as a P-, U- or K-listed hazardous waste.

The AMWTP does not use commercial chemicals containing beryllium powder. Although TRU absorbed liquids may contain beryllium contamination the beryllium contamination is only associated spent forms of beryllium; it is not associated with commercial chemical product, an off-specification species, a manufacturing intermediate a container residue, or a spill residue thereof. Based on this information, the P015 HWN does not apply to the TRU absorbed liquids.

The AMWTP does not use hydrofluoric acid at the site. Although hydrofluoric acid was identified as a chemical used (for its intended purpose) during plutonium processing at some of the generator sites, AK indicates that only spent forms of hydrofluoric acid would have contaminated wastes from the generator sites. Based on this information, the U134 HWN does not apply to the absorbed liquids.

The AMWTP does not generate waste that would be classified as K-listed hazardous waste. The absorbed liquids are not hazardous waste from specific sources listed in 40 CFR 261.32. Based on this information, the K-listed HWNs do not apply to the absorbed liquids.

5.3.4.2 Radionuclide Content

The radionuclides expected to be quantifiable or calculated by NDA technique in absorbed liquids waste derived from historically stored waste are summarized in RPT-TRUW-07. Other radionuclides identified in the waste are also summarized in RPT-TRUW-07 (Section 3.7).[83]

5.3.4.3 Prohibited Items

The absorbed liquids are not expected to contain WIPP prohibited items AMWTP packaging procedures and AMWTP RTR and/or VE procedures are used to support the absence of prohibited items for newly generated waste. Drums containing prohibited items will not be shipped to WIPP. Containers with WIPP-prohibited liquids may be treated using nonhazardous solidification agents (e.g., SP-400®, Aquaset II-G®, Micro-Cel® E, Petroset II-G®, or other approved inorganic particulate) to render the waste acceptable prior to shipment.

5.3.4.4 Identification of PCBs

The absorbed liquids derived from PCB waste are assigned IDC BN-605. IDC BN-509 or IDC BN-515 is assigned to absorbed liquids that are not derived from PCB wastes.

5.4 AMWTP Laboratory Homogenous Solids

To be developed: BN-598, BN-599, BN-602, and BN-603

Secondary waste generated in the laboratory from analyzing waste samples. The waste is comprised of analytical liquids (e.g., extraction liquids) that have been absorbed or solidified with imbiber beads, Acid Bond 660, or other absorbent/solidification agents. These liquids were

generated during analysis of waste samples. The waste may contain sample residues (leached solids remaining after extraction) and returned unused sample material. Waste may also contain <50% by volume debris items (e.g. vials). This waste is generated at the analytical laboratory located at RWMC and operated by AMWTP. [76] Table 5.4 provides a list of IDCs included in this waste group and dates of generation for AMWTP Laboratory Homogeneous solids.

Table 5.4. AMWTP Laboratory homogeneous solids waste IDCs, waste descriptions, and generation dates.

IDC	Description	Generation Date
BN-598	P/U-listed Lab PCB Homogeneous Solids Waste	TBD
BN-599	Lab Non-PCB Homogenous Solids Waste (not P/U-listed)	TBD
BN-602	P/U-listed Lab Non-PCB Homogeneous Solids Waste	TBD
BN-603	Lab PCB Homogenous Solids Waste (not P/U-listed)	TBD

6.0 S4000 SOIL WASTE GROUP

6.1 Soil

6.1.1 Waste Description

Soil is generated during retrieval and/or spills/cleanup activities. During the retrieval process soil may be generated from the removal of overburden and/or interstitial soil between containers of waste or as a result of spill cleanup or packaged soil from a breached soil waste container during segregation of soils identified during VE in the box lines. The soil waste is described in HWD 060509-02, 062309-08, 061610-02 and PK, as documented by the AMWTP Waste Services group. This waste is comprised of IDCs BN-501 and BN-522 as listed in Table 6.1 also including the dates of generation for AMWTP TRU soil. [26]

Table 6.1. AMWTP TRU soil waste IDCs, wastes descriptions, and generation dates.

IDC	Description	Generation Date
BN-501	AMWTP PCB Soil	2003-ongoing
BN-522	AMWTP Non-PCB Soil	2003-ongoing

BN-501 AMWTP PCB Soil: Soil (natural geologic material <2.36 inches [60 millimeters]) generated during retrieval, characterization, treatment, packaging, storage, and other waste management activities conducted at the AMWTP that are or may be PCB contaminated. It also may include soils generated by AMWTP as a result of repackaging loose soil from breached containers that is suspect of being PCB contaminated. Waste may include repackaged or intact containers of historically-stored soils with insufficient AK information to assign a legacy IDC. The BN-501 soil may also contain <50% by volume homogeneous solids or debris including natural geologic material (e.g., rocks) >2.36 inches (60 millimeters). [76]

BN-522 AMWTP Non-PCB Soil: Soil (natural geologic material <2.36 inches [60 millimeters]) generated during retrieval, characterization, treatment, packaging, storage, and other waste management activities conducted at the AMWTP that are not PCB contaminated. It also may include soils generated by AMWTP as a result of repackaging loose soil from breached containers. Waste may include repackaged or intact containers of historically stored soils with insufficient AK information to assign a legacy IDC. The BN-522 soil waste may also contain <50% by volume homogeneous solid waste or debris including natural geologic material (e.g., rocks) >2.36 inches (60 millimeters). [76]

6.1.2 Waste Generation

Soil is primarily generated during retrieval activities within WMF-636; however, soil may also be generated during spill cleanup activities (Sections 3.6.1 and 3.6.3.5). Soil may also be generated when it is collected during segregation from debris waste in the box line areas in the facility. (3.6.5.1). Containerization of the berm soil and subsequent management is based on radioassay results. Soils that assay as MLLW are managed under the AMWTP MLLW program. Soils that assay as TRU (i.e., ≥100 nCi/g) are managed for subsequent shipment to WIPP. Loose soil discovered during retrieval and/or spill is packaged into drums or boxes. Containerized soil that is in poor condition where historical information is lacking may be managed as newly generated AMWTP soil.

The waste may also be generated during characterization, treatment, packaging, storage, and other waste management activities (Section 3.0). Soil that is suspect of being PCB-contaminated is packaged as BN-501. Soil that is not suspected of being PCB-contaminated (i.e., non-PCB) is packaged as BN-522. [26, 76]

6.1.2.1 Areas and/or Building from which the Waste Was Generated

The waste is primarily generated within WMF-636. The waste may be generated within WMF-628 through 635 as a result of spill cleanup. [26] Soils may also be segregated from debris waste in the box lines when retrieved containers with >50% soil are inadvertently introduced.

6.1.2.2 Process Flow Diagram

The process flow diagram for AMWTP TRU soil is presented in Figure 8.

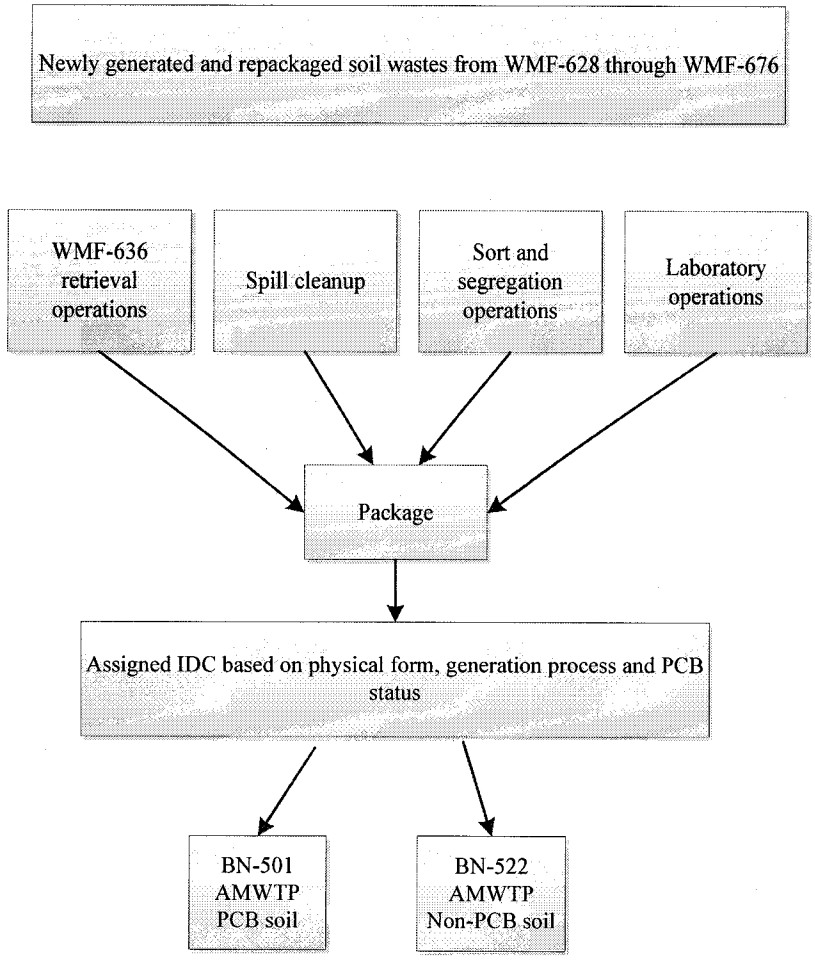

Figure 8. General process flow diagram for the primary activity that generates AMWTP soil.

6.1.2.3 Material Inputs

The material inputs to the soil are primarily contaminated soil identified during retrieval, segregation in the box lines, or spill cleanup. The waste may also contain or be commingled with homogeneous solids or debris waste (Section 3.2.1). Nonhazardous solidification agents: SP-400®, Aquaset®, Aquaset II-G®, Petroset II®, Petroset II-G® or Micro-Cel® E absorbents may also be present in waste containers. (26, 30, 35, 130, 131, 132, 133)

Material inputs are identified by various activities including, but not limited to, input from VE and/or RTR, related generator AK summary reports, and information provided by the AMWTP waste generator and the AMWTP Waste Services HWD and PK.

6.1.2.4 Waste Volume

Generation rates will be provided by the generator at the time of WIPP profiling, if generation is ongoing. See AMWTP WTS for current up-to-date volumes for each IDC.

6.1.3 Waste Packaging Description

Soil is packaged in accordance with applicable AMWTP procedures (e.g., INST-OI-24).[22, 25]

6.1.4 Waste Characterization

The AMWTP approach to characterization is described in Section 3.9. The waste has been historically managed as both mixed and nonmixed wastes. The AK for soils waste is based on related generator AK summary reports, PK and Waste Services HWDs. AK characterization is augmented by VE, RTR and NDA. Waste constituents and HWNs assigned to the soils are identified in the Waste Services HWDs.[5, 40, 61, 123]

6.1.4.1 Identification of EPA HWNs

Newly generated AMWTP TRU soils waste HWNs/constituents may be based on one or more of the following: related generator AK summary reports, PK, the RCRA mixture and derived-from rules, generator input, Waste Services determinations. The characterization results are documented in a Waste Services HWD. Waste constituents and HWNs assigned to the soils are identified in the Waste Services HWDs. [5, 31]

6.1.4.1.1 Ignitability

Soil does not meet the 40 CFR 261.21 definition of ignitability. TRU soil is not a liquid, an ignitable compressed gas, or an oxidizer. If found, liquid in excess of WIPP-WAC limits will be removed or undergo treatment (absorption) prior to WIPP shipment/disposal. Containers that are identified as having prohibited liquids may be treated using Aquaset®, Aquaset II-G®, SP-400®, Petroset II®, Petroset II-G® or Micro-Cel® E absorbents to ensure that the waste is acceptable for disposal at WIPP. Soil is not compressed gas and does not contain compressed gas. TRU soil does not meet the DOT definition of an oxidizer as defined in 49 CFR 173. Finally, the waste is not capable of causing fire through friction, absorption of moisture, or spontaneous chemical change. The soil does not exhibit the characteristic of ignitability (D001). [5, 130, 131, 132, 133]

6.1.4.1.2 Corrosivity

Soil does not meet the 40 CFR 261.22 definition of corrosivity. Soil is not liquid waste and is not expected to contain liquids in excess of WIPP-WAC limits. If found, liquid in excess of WIPP-WAC limits will be removed or treated (absorbed) prior to WIPP shipment/disposal. Containers that are identified as having prohibited liquids may be treated using Aquaset®, Aquaset II-G®, SP-400®, Petroset II®, Petroset II-G® or Micro-Cel® E absorbents to ensure that the waste is acceptable for disposal at WIPP. TRU soil does not exhibit the characteristic of corrosivity (D002). [5, 130, 131, 132, 133]

6.1.4.1.3 Reactivity

Soil does not meet the 40 CFR 261.23 definition of reactivity. Soil is not a liquid waste. Any containers that are identified as having prohibited liquids may be treated using Aquaset®,

Aquaset II-G®, SP-400®, Petroset II® or Petroset II-G®, or Micro-Cel® E absorbents to ensure that the waste is acceptable for disposal at WIPP. TRU soil is stable and will not undergo violent chemical change, react violently with water, form potentially explosive mixtures with water, or generate toxic gases, vapors, or fumes when mixed with water. The waste does not contain sulfide waste which, when exposed to a pH between 2 and 12.5 can generate toxic gases, vapors, or fumes in a quantity sufficient to present a danger to human health or the environment. The waste is not capable of detonation or explosive reaction if subjected to a strong initiating source if heated under confinement. The waste is not readily capable of detonation or explosive decomposition or reaction at standard temperature and pressure. The wastes do not contain explosive material and are not forbidden explosives or Division 1.1, 1.2, or 1.3 (Class A or B) explosives as defined in 49 CFR Part, 173. Although some of the waste contains wastes assigned F006, F007, and F009 listed HWNs associated with cyanide electroplating operations, the waste when exposed to a pH between 2 and 12.5 will not generate toxic gases, vapors, or fumes in a quantity sufficient to present a danger to human health or the environment. Soil does not exhibit the characteristic of reactivity (D003). [5, 130, 131, 132]

6.1.4.1.4 Toxicity Characteristic

Soil may meet the definition of toxicity for metals and organics as defined in 40 CFR 261.24. Waste constituents and HWNs assigned to the soils are identified in the Waste Services HWDs. [5, 31]

6.1.4.1.5 Listed Waste

6.1.4.1.5.1 F-Listed HWNs

Soil may meet the definition for an F-listed hazardous waste. Waste constituents and HWNs assigned to the soils are identified in the Waste Services HWDs. [5, 31]

6.1.4.1.5.2 P-, U- and K-Listed HWNs

Newly generated soil does not currently meet the definition for a P-, U- or K-listed hazardous waste. Waste constituents and HWNs assigned to the soils are identified in the Waste Services HWDs. [31]

Soil is not currently classified as a P-, U- or K-listed hazardous waste. Soil is not discarded, unused, commercial chemical products, off-specification species, a manufacturing intermediate or contains spill residues thereof that would meet the listing of P- or U-listed hazardous waste as identified in 40 CFR 261.33. In addition, soil was not mixed with, or derived-from the treatment, storage, or disposal of P- or U-listed hazardous waste. As a result, P- or U-listed HWNs are not assigned to soil. [5]

The AMWTP does not use commercial chemicals containing beryllium powder. The soil may be contaminated with trace quantities of beryllium (e.g., less than one percent of the waste by weight). Although soil may contain beryllium contamination, the beryllium contamination is only associated with spent forms of beryllium; it is not associated with commercial chemical

product, an off-specification species, a manufacturing intermediate a container residue, or a spill residue thereof. Based on this information, the P015 HWN does not apply to soil. [5]

The AMWTP does not use hydrofluoric acid at the site. Although hydrofluoric acid was identified as a chemical used (for its intended purpose) during plutonium processing at some of the generator sites, AK indicates that only spent forms of hydrofluoric acid may be present in waste from the generator sites. The soil does not contain and was not derived from an unused commercial chemical product, an off specification species thereof, or a manufacturing intermediate that would be classified as a U134 HWN. Based on this information, the U134 HWN does not apply to TRU soil. [5]

The AMWTP does not generate waste that would be classified as K-listed hazardous waste. Soil is not hazardous waste from specific sources since it is not generated from the processes listed in 40 CFR 261.32. Soil does not contain and was not derived from waste that would be associated with specific sources associated with a K-listed HWN. Therefore, soil is not K-listed hazardous waste.

6.1.4.2 Radionuclide Content

Soil may be contaminated with various radionuclides as a result of retrieval operations and spill cleanup. Soil can contain any radionuclide associated with retrieved waste. Radionuclides associated with AMWTP retrieved waste are identified in RPT-TRUW-07. [83]

6.1.4.3 Prohibited items

The soil is not expected to contain WIPP-prohibited items. AMWTP packaging procedures and AMWTP RTR and/or VE procedures are used to support the absence of prohibited items for newly generated waste. Drums containing prohibited items will not be shipped to WIPP. Containers with WIPP-prohibited liquids may be treated using nonhazardous solidification agents (e.g., SP-400®, Aquaset II-G®, Micro-Cel® E, Petroset II-G®, or other approved inorganic particulate) to render the waste acceptable prior to shipment. Other PIs (e.g., sealed containers greater than 4 liters) will be treated to render the waste acceptable prior to shipment. [130, 131, 132, 133]

6.1.4.4 Identification of PCBs

Soil may be PCB-contaminated as a result of leaking PCB containers within the earthen covered storage areas. Newly generated soil classified as PCB is assigned the IDC BN-522. [5]

7.0 S5000 HETEROGENEOUS DEBRIS WASTE GROUP

7.1 Non-PCB Debris Waste

7.1.1 Waste Description

The Supercompactor feedstock debris waste group is composed of non-PCB debris waste. It currently includes repackaged debris wastes from other generators (reference IDCs listed in RPT-TRUW-83) and AMWTP waste generated from S/C operations, IDC BN-508. This repackaged feedstock waste from the box lines is identified as IDC BN-508. IDCs BN-519 and BN-541 are boxes or pallets (e.g. SDOPs) that contain drummed waste with IDCs listed in RPT-TRUW-83. The supercompacted debris BN-510 and BN-550 containers that are damaged or unacceptable for shipping are approved to re-enter the box lines and be processed as feed stock.

Other debris wastes that are potential future feedstock to the AMWTP S/C (e.g., BN-500, BN-521, BN-524, BN-527, and BN-537) are included in this waste group. BN-500 and BN-521 can be added as feedstock when required information for WAP profiling is provided (see Section 7.3 for BN-521). BN-524 waste can be added as feedstock after approval of the INL-generated waste.

Waste from approved feedstock that is too large or impractical to be processed with the size reduction equipment in the box lines (e.g., Brokk manipulators) is transferred to the size reduction area for plasma cutting or other operations in the hot maintenance cell. Items that cannot be size-reduced are transferred out of the facility for direct ship.

The Supercompactor feedstock debris waste is described in HWDs 010311-01, 010511-01, 010710-01, 021411-01, 022205-01, 031110-01, 051012-01, 052909-01, 060712-01, 060910-02, 061504-02, 071511-01, 102109-01, and 122010-01, and PK, as documented by the AMWTP Waste Services group. However, waste that is potential feedstock cannot be processed until the waste is authorized as feedstock Carlsbad Field Office (CBFO). [5, 122, 189, 190, 191, 192]

Supercompactor feedstock debris waste has been generated since March 2003. Table 7.1 includes approved and potential waste descriptions and dates of generation.

Table 7.1. Newly generated non-PCB debris waste IDCs, waste descriptions, and generation dates.

Approved Feedstock		
IDC	**IDC Description**	**Generation Date**
BN-508	AMWTP Newly Generated Debris	2003-ongoing
BN-510	Supercompacted Debris	2003-2010
BN-519*	TRU SDOP to Supercompactor	2011-ongoing
BN-541*	Debris SDOP to Supercompactor	2012-ongoing
BN-550	Supercompacted Debris	2010-ongoing
Potential Feedstock		
IDC	**IDC Description**	**Generation Date**
BN-500	Newly Generated Debris (not BN-508)	2003-ongoing
BN-521	TRU Secondary Debris Generated from Offsite Waste	2007-ongoing
BN-524	Pad 1 Cells 1 and 2 Non-PCB Debris	2011-ongoing
BN-537	TRU Empty Containers	TBD

*This is a temporary IDC only and is used as a management tool to transport/receive waste into the WMF-676 box line.

BN-500 Newly Generated Debris (not BN-508): Heterogeneous non-PCB debris waste generated by AMWTP that is not BN-508. This IDC includes non-PCB waste generated in TSA-RE, Type II storage areas, DRF, DTF, and waste characterization areas in WMF-634. It includes waste repackaged in the DWPG and SCW that is generated as a result of processing waste assigned IDCs not approved in RPT-TRUW-83 and off-gas filters generated in WMF-676. It may also include repackaged loose debris from breached containers that is **not** PCB-contaminated. Waste may contain any type of debris waste (e.g., cloth, paper, plastics, glass, rubber and metals debris). Waste may also contain <50% by volume soils or homogeneous solids (e.g., sludges). (76)

BN-508 AMWTP Newly Generated Debris: This is debris waste generated in WMF-676 that is directly related to the S/C operations from IDCs approved in RPT-TRUW-83 as approved feedstock (e.g., debris from box lines). It includes TRU debris waste generated during waste management, maintenance, and cleanup operations performed in WMF-676 Zone 3 in direct support of S/C operations, including HEPA and prefilters generated from the WMF-676 ventilation systems. Waste also includes TRU debris from repackaging waste in DWPG and SCW with IDCs approved in RPT-TRUW-83. Waste may also contain <50% by volume

homogeneous solids (e.g., absorbents including Vermiculite, Oil Dri® and Aquaset II-G®), soil and sand.(76)

BN-510 Supercompacted Debris: All types of TRU debris waste that is compacted at the AMWTP and will be shipped to WIPP under WSPF BN510. (76)

BN-519 TRU SDOP to Supercompactor: All IDCs approved in RPT-TRUW-83 packaged in 55-gallon drums or larger that has been overpacked into a box or placed on a pallet for processing in AMWTF. (76)

BN-521 TRU Secondary Debris Generated from Offsite Waste: (see Section 7.3 for BN-521).

BN-524 Pad 1 Cells 1 and 2 Non-PCB Debris: Heterogeneous debris waste generated during repackaging of loose waste found on Cells 1 and 2 of Pad 1 that is commingled with non-RF debris but is **not** contaminated with or commingled with PCB waste (e.g., organic setups or interstitial soil). Waste includes intact containers and repackaged containers of debris waste historically stored within Cells 1 and 2 of Pad 1 with insufficient AK information to assign a legacy IDC. Waste may contain any type of debris waste (e.g., cloth, paper, plastics, glass, rubber and metals debris). Waste may also contain <50% by volume noninterstitial soils. (76)

BN-537 TRU Empty Containers: Empty cargo containers, boxes, 55-gallon drums or 83/85-gallon overpacks generated during the retrieval, repack, or treatment process verified to be non-PCB waste. (76)

BN-541 Debris SDOP to Supercompactor: All IDCs approved in RPT-TRUW-83 packaged in 55-gallon drums or larger that have been overpacked into a box or placed on a pallet for processing in AMWTF. This IDC is assigned to the overpack container only and not the waste it contains. (76)

BN-550 Supercompacted Debris: All types of TRU waste that is compacted at the AMWTP and will be shipped to WIPP. Product drums (100-gallon) typically contain multiple compacted 55-gallon drums of approved feedstock (i.e., pucks) associated with the TRU IDCs listed in RPT-TRUW-83. Waste may also contain <50% by volume nondebris per container. (76)

7.1.2 Waste Generation

Sources of Supercompactor feedstock debris waste can be generated by the operations described in Section 3.6.

BN-500 includes secondary debris waste that includes non-PCB waste generated in TSA-RE, TYPE II storage areas, Drum Repackaging Facility (DRF), Drum Treatment Facility (DTF) and waste characterization areas in WMF-634 and WMR-676. It includes waste repackaged in the DWPG, WMF-676 (e.g., Supercompactor clean-out) and SCW that is generated as a result of processing waste assigned IDCs not approved in RPT-TRUW-83. It also includes waste that is generated as a result of: routine waste handling and retrieval operations,

repackaging of loose waste, radiological/chemical monitoring, spill response activities, decontamination, treatment, equipment maintenance, and characterization (e.g., VE, HSG, GGT, and solid sampling). Secondary debris is generated as a result of providing overall support to TRU waste operations retrieved waste containers and occurs in various storage areas throughout the AMWTP. It does not include waste that meets the description of BN-508.

IDC BN-508 is generated in WMF-676 as a result of managing waste with a TRU IDC approved in RPT-TRUW-83 (i.e., authorized feed to S/C) and includes:

1. Repackaging authorized S/C debris feedstock within the box line
2. WMF-676 ventilation off-gas filters
3. Secondary waste generated during waste management, maintenance, and cleanup operations in WMF-676 Zone 3 in direct support of S/C operations associated with approved IDCs as listed in RPT-TRUW-83
4. Repackaged waste from DWPG/SCW areas from IDCs approved in RPT-TRUW-83.

The primary generation activity is from repackaging authorized S/C debris feedstock within the box line. Authorized S/C debris feedstock wastes are received into the south or north box line and transferred to the box line troughs for sorting/segregation of prohibited items, size reduction and repackaging. After conducting VE activities on the waste, the waste is loaded/repackaged into unlined 55-gallon drums (silvers). The silvers are sent to the S/C for processing/treatment as BN-508s. The IDC also includes repackaged waste from DWPG/SCW areas within IDCs approved in RPT-TRUW-83. Containerized waste (BN-508) generated directly from S/C operations can be placed into the box line or used as direct feed to the S/C.

BN-524 debris waste is generated during repackaging of debris waste from Cells 1 and 2 of Pad 1 containers that is **not** PCB-contaminated or commingled with PCB waste (e.g., organic setups or with interstitial soil). Waste includes intact containers and repackaged containers of debris waste historically stored within Cells 1 and 2 of Pad 1 with insufficient AK information to assign a legacy IDC. Waste stored in Cells 1 and 2 of Pad 1 was generated from RF and INL (Section 3.6.1.2).

IDC BN-537 may be generated as a result of removing empty containers from the AMWTP retrieval area or otherwise generated as a result of repackaging or un-overpacking containers (Sections 3.6.1, 3.6.2, and 3.6.5).

The boxed waste, BN-519 and BN-541, includes multi-drum overpacks (SDOPs, EMOPs, and SMOPs) containing up to eight 55- or six 85-gallon drums). These are created by virtual overpack planning. [163]An SDOP is a six-drum overpack wood box, an EMOP is an eight 55-gallon drum metal pallet, and an SMOP is a six 85-gallon drum metal pallet. The box overpacks are of two types: (1) one type is packaged with characterized debris drums for processing in AMWTF. These contain drums with IDCs confirmed by RTR to be acceptable feedstock waste; (2) the other type is packaged with drums that are not characterized but are

labeled with historical acceptable knowledge (AK) information that indicates acceptable feedstock waste. The un-characterized overpacks are subjected to RTR to confirm that each container is >50% debris. VE is performed in the box lines to confirm that each container is acceptable feedstock.

7.1.2.1 Areas and/or Building from which the Waste was Generated

The AMWTP heterogeneous debris wastes that are approved or are potential Supercompactor feedstock are shown in Table 7.2.

Table 7.2. Area of generation with generation process and applicable report section for each heterogeneous debris waste.

IDC	Area	Process	Section
BN-500	WMF-636 TSA-RE	Retrieval	3.6.1
	Site Wide	Monitoring	3.6.2
	WMF-628 DTF WMF-629 WMF-630 WMF-635 DRF WMF-676 DRS/SCW	Repackaging	3.6.2
	Site Wide Type II Modules WMF-615 DVF WMF-628 DTF WMF-629 WMF-630 WMF-634 DVS WMF-635 DRF WMF-676 DRS/SCW	Container handling	3.6.2
	Site Wide	Storage	3.6.2.1
	WMF-615 WMF-628 WMF-634 WMF-635 WMF-636 WMF-676	Maintenance	3.6.3
	WMF-615 DVF WMF-634 DVS WMF-676 DRS WMF-676 SCW	Decontamination	3.6.3.2
	Site Wide	Spill response	3.6.3.5

Table 7.2. (Continued).

IDC	Area	Process	Section
	WMF-628 WMF-634 WMF-676 DWPG/SCW	Characterization	3.6.4
	WMF 676 DWPG WMF-676 SCW WMF-634 DCSRS WMF-628 DTF	Treatment	3.6.5
BN-508	WMF-676 DWPG/SCW	Repackaging	3.6.2.2.3
	WMF-676 Box lines	Repackaging	3.6.5.2.1
	WMF-676 Box lines and S/C	Maintenance	3.6.3.2.4
BN-510 and BN-550	WMF-676 Supercompactor	Supercompaction	7.2
BN-519 and BN-541	WMF-629, -630	SDOP packaging	3.6.2.2.1
BN-521	WMF-628 WMF-634 WMF-676 DWPG/SCW	Characterization	3.6.4
BN-524	WMF-636 TSA-RE Pad-1, Cells 1 and 2	Waste container retrieval	3.6.1.2
BN-537	WMF-636 TSA-RE	Waste container retrieval	3.6.1.2
	WMF-676 DRS WMF-635 DRF WMF-629 Boxes	Drum preparation	3.6.2.2
	WMF-628 DTF	Un-Overpacking	3.6.5.3

7.1.2.2 Process Flow Diagrams

The process flow diagrams for the newly generated debris waste are presented in Figures 9 and 10.

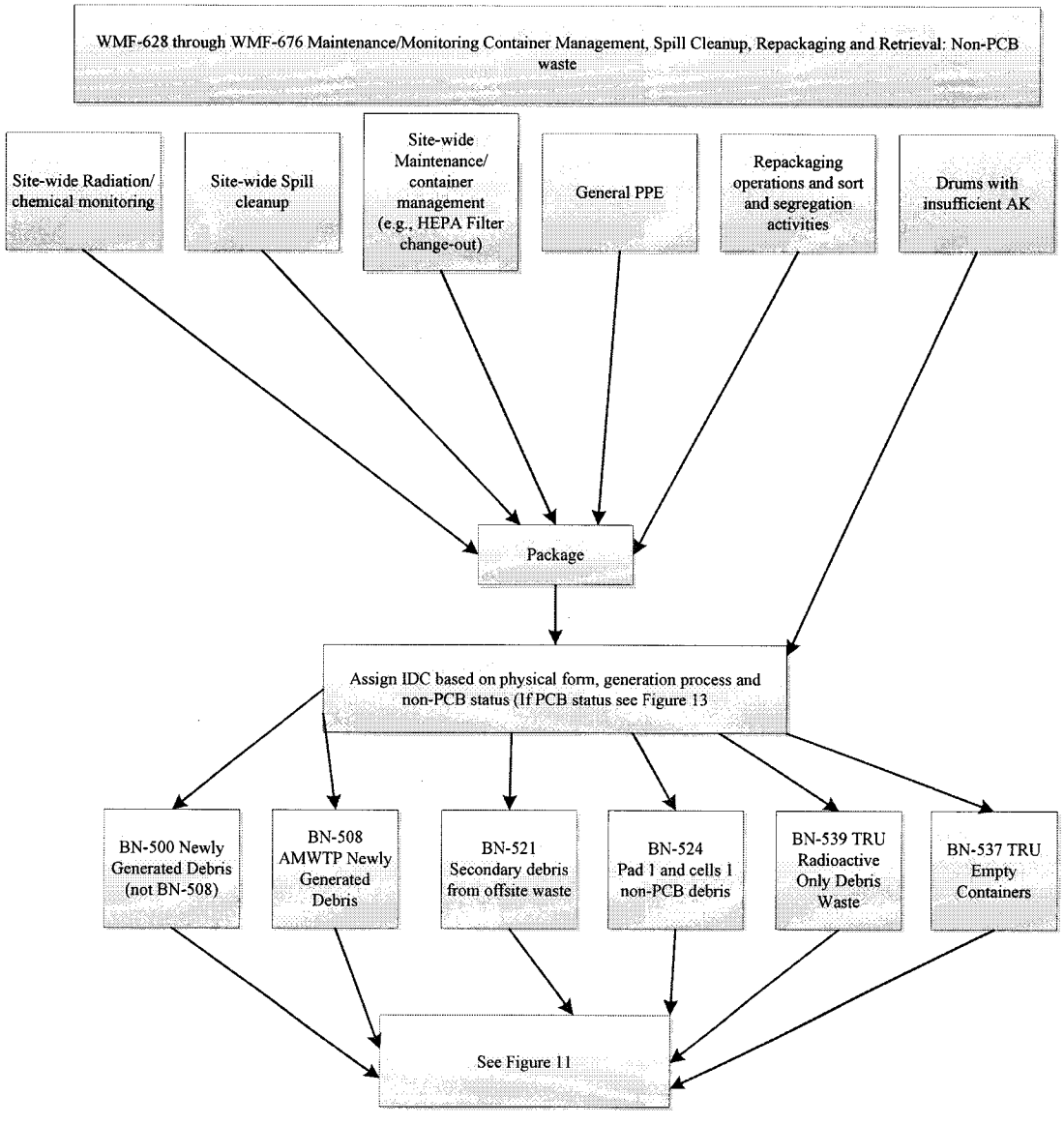

Figure 9. General flow diagram for newly generated debris waste from maintenance/monitoring and cleanup activities.

The following Figure 10 outlines the flow diagram for newly generated debris waste from characterization.

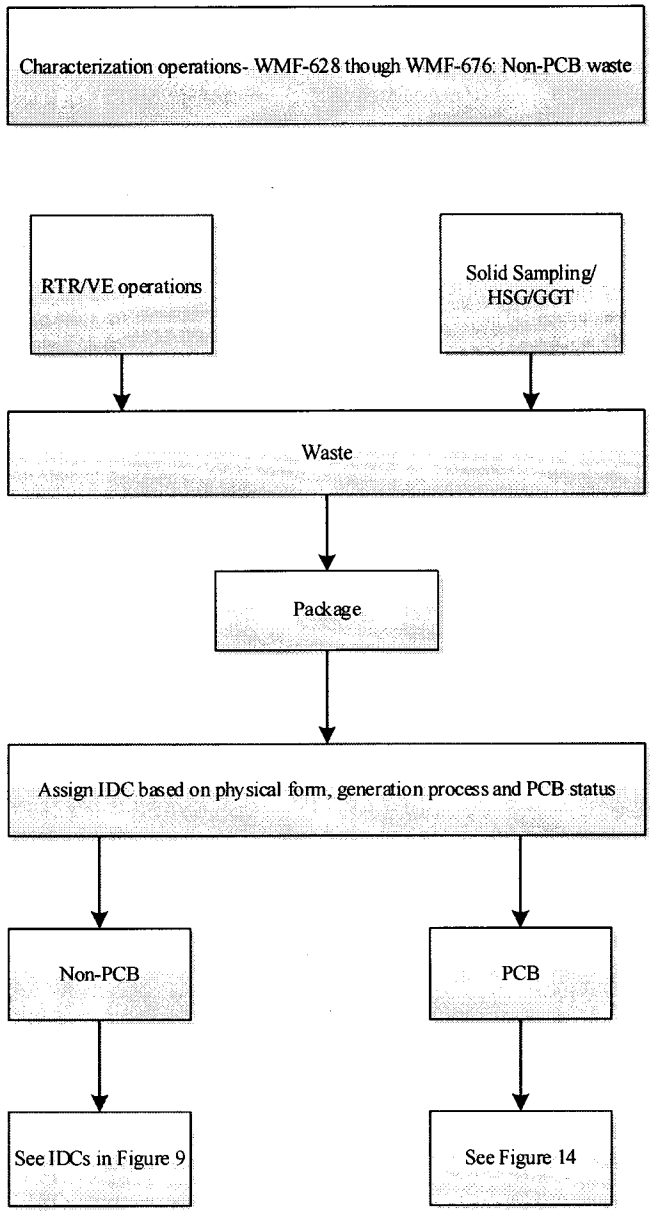

Figure 10. General flow diagram for newly generated debris waste from characterization.

7.1.2.3 Material Inputs

TRU Supercompactor feedstock debris may contain any type of debris waste (e.g., paper and rags; gloves; wipes; asbestos; PPE); plastic and rubber items; absorbent PIGs® (e.g., mats, blankets, socks, etc.), filters; leaded gloves, aprons, bricks, and sheeting; metal debris, lead, cadmium; floor tiles, piping, sheet rock, insulation, glass; raschig rings; crucibles; fire brick; wood; Plexiglas®; Benelex®; tools; graphite; grit; asphalt and concrete). Retrieved waste containers (e.g., drums, bins, and boxes) may also contain <50% by volume non-PCB homogeneous solids (e.g., sludges and absorbents) and soil. Material inputs are identified during various activities including, but not limited to input from RTR/VE related generator AK summary reports, and information provided by the AMWTP waste generator and the AMWTP Waste Services HWDs and PK.

7.1.2.4 Waste Volume

The estimated volumes of Supercompactor feedstock debris waste may change over the lifetime of the project as additional feedstocks are approved for supercompaction.

Estimated volumes of potential Supercompactor feedstock debris waste that may be eligible in the future for supercompaction will be developed and incorporated into an AK summary report at the time of profiling. See AMWTP WTS for current up-to date volumes for each IDC within this waste group.

7.1.3 Waste Packaging

Approved and potential Supercompactor feedstock debris waste is packaged in accordance with applicable AMWTP procedures (e.g., INST-OI-24 or INST-FOI-17). [25, 40]

AMWTP Supercompactor feedstock debris waste (IDC BN-508) generated during box line operations is packaged in thin-walled 55-gallon drums (i.e., silvers) (Section 3.6.5.2).

7.1.4 Waste Characterization

The AMWTP general approach to characterization is described in Section 3.9. Newly generated AMWTP Supercompactor feedstock debris waste has been historically managed as mixed wastes. The AK for newly generated AMWTP debris waste associated with the AMWTP Supercompactor feedstock debris waste (i.e., BN IDCs) is based on related generator AK summary reports, PK, generator input and applicable Waste Services HWDs. AK characterization is augmented by VE, RTR, and NDA. [5] Waste constituents and HWNs assigned to the approved Supercompactor feedstock debris waste are identified in RPT-TRUW-83 and included in RPT-TRUW-12. Waste constituents and HWNs assigned to the potential Supercompactor feedstock debris waste are identified in the related generator AK summary reports, and information provided by the AMWTP waste generator and the AMWTP Waste Services HWDs and PK. [31]

7.1.4.1 Identification of EPA HWNs

Newly generated AMWTP Supercompactor feedstock debris waste HWNs/constituents may be based on one or more of the following: related generator AK summary reports, PK (e.g., HWNs associated with authorized Supercompactor feedstock), the RCRA mixture and derived-from rules, generator input, Waste Services determinations. The characterization results are documented in Waste Services HWDs. Waste constituents and HWNs assigned to the potential Supercompactor feedstock debris waste are identified in the Waste Services HWDs; and approved Supercompactor feedstock debris waste are identified in RPT-TRUW-83 and included in RPT-TRUW-12. [5, 122]

The potential feedstock IDCs are not included as part of the following characterization sections.

7.1.4.1.1 Ignitability

7.1.4.1.1.1 Direct-feed Wastes

Newly generated debris containers selected for direct-feed is not a liquid waste. However, the direct-feed container may contain ignitable liquids. The current State of Idaho RCRA/HWMA permit allows the AMWTP to process by direct-feed pressurized aerosol cans within the Supercompactor providing that the total volume within the pressurized aerosol cans are with less than or equal to 49 ml and the total volume of liquids within the container does not exceed a maximum of 5% of the overall container capacity.[11, 61, 166, 169, 171, 179, 183]

7.1.4.1.1.2 Box Line Wastes

The containers accepted for processing within the WMF-676 box line areas may contain waste items that exhibit the characteristics of ignitability (D001).[11, 169, 171, 179, 183] Newly generated debris containers that enter the box line that also contain internal containerized liquids in excess of AMWTP permit and facility limits; unvented aerosol cans; and/or compressed gas cylinders (other than fire extinguishers[d]) will be removed and/or undergo treatment (liquid absorption/venting) within the WMF-676 SCW area. Uncontainerized liquids within newly generated debris waste containers received into the box line and/or discovered in the WMF-676 box line may be treated in the box line troughs or SCW using: SP-400®, Aquaset®, Aquaset II-G®, Petroset II®, Petroset II-G® or Micro-Cel® E absorbents to ensure that the waste is acceptable for supercompaction. [130, 131, 132, 133]

7.1.4.1.1.3 Repackaged Box Line Wastes

Newly generated Supercompactor feedstock debris wastes accepted into the box line undergoes treatment (or removal) for liquids and pressurized aerosol cans prior to repackaging and subsequent compaction. The repackaged box line waste (BN-508) is not a liquid and is not capable of causing fire through friction, absorption of moisture, or spontaneous chemical change.

[d] Fire extinguishers may be treated in the WMF-676 box line troughs.

Repackaged box line wastes will not meet the definition of a RCRA ignitable waste. [5, 122, 130, 131, 132, 133]

7.1.4.1.2 Corrosivity

7.1.4.1.2.1 Direct-feed Wastes

Newly generated debris containers selected for direct-feed is not a liquid waste. However the direct-feed container may contain corrosive liquids. [11, 169, 171, 179, 183] The current State of Idaho RCRA/HWMA permit allows the AMWTP to process by direct-feed pressurized aerosol cans within the Supercompactor providing that the total volume within the pressurized aerosol cans are with less than or equal to 49 ml and the total volume of liquids within the container do not exceed a maximum of 5% of the overall container capacity.[11, 61, 166, 169, 171, 179, 183]

7.1.4.1.2.2 Box Line Wastes

Newly generated debris containers selected for processing within the WMF-676 box line areas is not a liquid waste. However, the container received into the WMF-676 box line may contain corrosive liquids. Newly generated debris containers that enter the box line that also contain internal containerized liquids in excess of AMWTP permit and facility limits and unvented aerosol cans will be removed and/or undergo treatment (liquid absorption/venting) within the WMF-676 SCW area. Uncontainerized liquids within newly generated debris waste containers received into the box line for repackaging and/or discovered in the WMF-676 box line may be treated in the box line troughs or SCW using: SP-400®, Aquaset®, Aquaset II-G®, Petroset II®, Petroset II-G® or Micro-Cel® E absorbents to ensure that the waste is acceptable for supercompaction.

7.1.4.1.2.3 Repackaged Box Line Wastes

Newly generated Supercompactor feedstock debris wastes accepted into the box line undergoes treatment (or removal) for liquids and pressurized aerosol cans prior to repackaging and subsequent compaction are not corrosive wastes. The repackaged box line waste (BN-508) is not a liquid and will exhibit a pH between (or equal to) 2.0 and 12.5 standard units. Repackaged box line wastes will not meet the definition of a RCRA corrosive waste. [122]

7.1.4.1.3 Reactivity

7.1.4.1.3.1 Direct-feed Wastes

Newly generated direct-feed debris waste containers are not expected to contain reactive items in the form of compressed gases (aerosol cans). The current State of Idaho RCRA/HWMA permit allows the AMWTP to process by direct-feed pressurized aerosol cans within the Supercompactor providing that the total volume within the pressurized aerosol cans are with less than or equal to 49 ml and the total volume of liquids within the container does not exceed a maximum of 5% of the overall container capacity.[11, 61, 166, 169, 171, 179, 183]

Newly generated debris containers that are processed as direct-feed containers will not contain items that meet the 40 CFR 261.23 definition of reactivity. Direct-feed containers may contain liquids. Although the waste may contain liquids, the overall status of the direct-feed containers is expected to be stable and will not undergo violent chemical change, react violently with water, form potentially explosive mixtures with water, or generate toxic gases, vapors, or fumes when mixed with water. The waste is not expected to contain sulfide waste which, when exposed to a pH between 2 and 12.5 can generate toxic gases, vapors, or fumes in a quantity sufficient to present a danger to human health or the environment, nor is the overall waste container expected to be capable of detonation or explosive reaction if subjected to a strong initiating source if heated under confinement. In addition, the waste is not readily capable of detonation or explosive decomposition or reaction at standard temperature and pressure and the waste does not contain explosive material and is not forbidden explosives or Division 1.1, 1.2, or 1.3 (Class A or B) explosives as defined in 49 CFR Part, 173.

Although some of the direct-feed debris waste containers contain wastes that are assigned F006, F007, and F009 listed HWNs and associated with cyanide electroplating operations, the waste when exposed to a pH between 2 and 12.5 will not generate toxic gases, vapors, or fumes in a quantity sufficient to present a danger to human health or the environment. [5, 130, 131, 132, 133]

7.1.4.1.3.2 Box Line Wastes

Newly generated Supercompactor feedstock debris waste received into the WMF-676 box lines for repackaging is not expected to contain reactive items in the form of compressed gases (aerosol cans). Newly generated debris containers that enter the box line that also contain internal containerized liquids in excess of AMWTP permit and facility limits; unvented aerosol cans; and/or compressed gas cylinders (other than fire extinguishers[e]) will be removed and/or undergo treatment (liquid absorption/venting) within the WMF-676 SCW area. Uncontainerized liquids within newly generated debris waste containers received into the box line and/or discovered in the WMF-676 box line may be treated in the box line troughs or SCW using: SP-400®, Aquaset®, Aquaset II-G®, Petroset II®, Petroset II-G® or Micro-Cel® E absorbents to ensure that the waste is acceptable for supercompaction. [f]

7.1.4.1.3.3 Repackaged Box Line Wastes

Newly generated repackaged box line waste (BN-508) TRU Supercompactor feedstock debris waste that is repackaged through the box line and eligible for supercompaction does not meet the 40 CFR 261.23 definition of reactivity. TRU debris waste that is repackaged through the box line and eligible for supercompaction is not a liquid waste. Free liquids may be treated using Aquaset®, SP-400®, Aquaset II-G®, Petroset II®, Petroset II-G® or Micro-Cel® E absorbents to ensure that the waste is acceptable supercompaction. Any containers that are

[e] Fire extinguishers may be treated in the WMF-676 box line troughs.

[f] Newly generated supercompactor feedstock debris waste accepted into the box line undergoes treatment for liquids and pressurized aerosol cans prior to repackaging and subsequent compaction. The repackaged box line waste will not meet the definition of a RCRA ignitable waste.

identified as having prohibited liquids may be treated using Aquaset®, Aquaset II-G®, Petroset II® or Petroset II-G®, or Micro-Cel® E absorbents to ensure that the waste is acceptable for disposal at WIPP. TRU debris waste that is repackaged through the box line and eligible for supercompaction is stable and will not undergo violent chemical change, react violently with water, form potentially explosive mixtures with water, or generate toxic gases, vapors, or fumes when mixed with water. The waste does not contain sulfide waste which, when exposed to a pH between 2 and 12.5 can generate toxic gases, vapors, or fumes in a quantity sufficient to present a danger to human health or the environment. The waste is not capable of detonation or explosive reaction if subjected to a strong initiating source if heated under confinement. The waste is not readily capable of detonation or explosive decomposition or reaction at standard temperature and pressure. The wastes do not contain explosive material and are not forbidden explosives or Division 1.1, 1.2, or 1.3 (Class A or B) explosives as defined in 49 CFR Part, 173. Although some of the waste contains wastes that are assigned F006, F007, and F009 listed HWNs and associated with cyanide electroplating operations, the waste when exposed to a pH between 2 and 12.5 will not generate toxic gases, vapors, or fumes in a quantity sufficient to present a danger to human health or the environment. Repackaged TRU debris waste from the box line operations does not exhibit the characteristic of reactivity (D003). [122, 130, 131, 132, 133]

7.1.4.1.4 Toxicity Characteristic

Newly generated Supercompactor feedstock debris waste meets the definition of toxicity for metals and organics as defined in 40 CFR 261.24.

The IDC for repackaged box line debris waste (i.e., BN-508) is assigned characteristic HWNs. See RPT-TRUW-83 for the current toxicity characteristic hazardous waste numbers. [122]

7.1.4.1.5 Listed Waste

Newly generated Supercompactor feedstock debris waste meets the definition for a listed hazardous waste.

7.1.4.1.5.1 F-listed HWNs

Newly generated Supercompactor feedstock debris waste meets the definition for an F-listed hazardous waste. Nonhalogenated F003 solvent constituents (e.g., acetone, cyclohexanone, ethyl benzene, ethyl ether, methanol, methyl isobutyl ketone, n-butyl alcohol, and xylenes) were identified in the AK and PK record as contaminants associated with the Supercompactor debris waste feedstock. The repackaged box line wastes do not exhibit the characteristic of ignitability. Therefore the F003 HWN is not assigned to the repackaged box line waste. [5, 16, 17, 18, 20, 122, 130, 132, 133, 141, 143, 144, 145, 189, 190, 191, 192]

See RPT-TRUW-83 for the current listed hazardous waste numbers for repackaged box line debris waste (i.e., BN-508). [122, 189, 190, 191, 192]

7.1.4.1.5.2 P-, U- and K-Listed HWNs

Newly generated Supercompactor feedstock debris waste does not currently meet the definition for a P, U or K-listed hazardous waste. See RPT-TRUW-83 for the current toxicity characteristic HWNs. Newly generated Supercompactor feedstock debris waste that is repackaged through the box line and eligible for supercompaction is not discarded, unused, commercial chemical products, off-specification species, a manufacturing intermediate or contains spill residues thereof that would meet the listing of P- or U-listed hazardous waste as identified in 40 CFR 261.33. In addition, TRU debris waste that is repackaged through the box line and eligible for supercompaction was not mixed with, or derived-from the treatment, storage, or disposal of P- or U-listed hazardous waste. As a result, P and U-listed HWNs are not assigned to TRU debris waste that is repackaged through the box line and eligible for supercompaction. The Environmental group has determined that the direct feedstock with containerized liquids that meets the AMWTP Permit requirements also meets the above criteria. (122, 189, 190, 191, 192)

The AMWTP does not use commercial chemicals containing beryllium powder. The TRU debris waste eligible for supercompaction may be contaminated with beryllium in concentrations of less than one percent of the waste by weight. Although TRU debris waste eligible for supercompaction may contain beryllium contamination, the beryllium contamination is only associated with spent forms of beryllium; it is not associated with commercial chemical product, an off-specification species, a manufacturing intermediate a container residue, or a spill residue thereof. Based on this information, the P015 HWN does not apply to TRU debris waste eligible for supercompaction. (5)

The AMWTP does not use hydrofluoric acid within TRU waste operations. Hydrofluoric acid was identified as a contaminant within S/C authorized debris feedstock. Hydrofluoric acid was identified as a chemical used (for its intended purpose) during plutonium processing at some of the generator sites. AK indicates that only spent forms of hydrofluoric acid would have contaminated TRU debris waste eligible for supercompaction. TRU debris waste eligible for supercompaction does not contain and was not derived from an unused commercial chemical product, an off specification species thereof, or a manufacturing intermediate that would be classified as a U134 HWN. Based on this information, the U134 HWN does not apply to TRU Supercompactor-related debris waste eligible for supercompaction. (5)

7.1.4.2 Radionuclide Content

The AMWTP debris waste may be contaminated with radionuclides associated with AMWTP retrieved waste identified in Section 3.7.

The radionuclides expected in the Supercompactor debris feedstock waste originate from historically stored (primarily RF, MD, BC, AE, SD, LA, and AW) debris waste as summarized in RPT-TRUW-07 and offsite waste from AW and RL waste also summarized in RPT-TRUW-07. The WIPP tracked radionuclides (^{238}Pu, ^{239}Pu, ^{240}Pu, ^{242}Pu, ^{233}U, ^{234}U, ^{238}U, ^{241}Am, ^{137}Cs, and ^{90}Sr) are expected to be present and measurable by NDA. (83)

7.1.4.3 Prohibited Items

Newly generated Supercompactor feedstock debris is not expected to contain WIPP-prohibited items. AMWTF packaging procedures and facility VE procedures are used to support the absence of prohibited items for newly generated waste.

Newly generated Supercompactor feedstock debris containers that also contain AMWTP permit and facility-prohibited items will not be supercompacted. Any S/C prohibited item found in the box line will be treated prior to supercompaction or will be removed from the box line and managed separately. (130, 131, 132, 133, 172)

7.1.4.4 Identification of PCBs

Newly generated Supercompactor feedstock debris received into the box lines may inadvertently contain PCB items or PCB sludges and soils. PCB items identified in boxed debris are removed during box line operations. Potential PCB-contaminated waste identified during box line repackaging is subject to AMWTP PCB cleanup requirements.(150) PCB items removed from approved feedstock debris waste drums and boxes and potential PCB cleanup wastes are packaged as newly generated waste and are not approved as feedstock debris waste.

7.2 WMF-676 Facility Repackaged TRU Debris Waste

7.2.1 Waste Description

The newly generated repackaged TRU debris waste group is generated from a single process/activity (i.e., repackaging). The AMWTP newly generated repackaged TRU debris waste includes supercompacted feedstock debris waste containers packed into 100-gal product drums, shredded empty boxes that contained feedstock debris, and oversized supercompacted feedstock debris re-packaged into boxes (and/or bins). (122, 189, 190, 191, 192) The feedstock debris waste consists of various combustible and noncombustible debris materials originally generated at multiple DOE sites (i.e., RF, MD, BC, AE, AW, SD, LA, and BN). The process of supercompaction produces "pucks." A puck is a compacted 55-gallon debris container. Several pucks are loaded into 100-gallon product drums for offsite shipment. Pucks are compressed/compacted 55-gallon drums that have been size-reduced to approximately one fifth of their normal size. The supercompacted debris wastes (i.e., pucks) are repackaged into 100-gallon product drums as BN-550 (previously identified as BN-510). After compaction, the drum pucks are loaded into 100-gallon drums. AMWTP supercompacted TRU debris wastes have been generated since March 2003.

Boxes that are emptied of waste contents into the box lines for treatment are subsequently shredded. The shredded materials are re-packaged into boxes as BN-539.

This waste group includes feedstock debris waste that is oversized and/or not conducive to size reduction in the box lines, hot maintenance cell and/or compaction. The debris waste that is not conducive to size reduction is repackaged to boxes. Waste from approved feedstock that is oversized and/or not conducive to be processed with the size reduction equipment in the box

lines (e.g., Brokk manipulators), is transferred to the size reduction area for plasma cutting or other operations in the hot maintenance cell. Items identified in the hot maintenance cell and the box lines as not conducive to size reduction are repackaged in boxes and removed from the facility.

These IDCs, BN-539, BN-538 and BN-540, are included in this waste group. The repackaged debris waste is described in HWD 110209-01, 030409-01, 110713-01, 071610-01, and PK, as documented by the AMWTP Waste Services group. The repackaged debris waste IDCs, waste descriptions, and dates of generation are provided in Table 7.3.

Table 7.3. Supercompacted debris waste IDCs, waste descriptions, and generation dates.

IDC	Description	Generation Date
BN-510	Supercompacted Debris	2003-2010
BN-538	Oversized Debris Items From Supercompactor Facility	2009- ongoing
BN-539	TRU Radioactive Only Debris Waste	TBD
BN-540	Oversized Debris Items From Supercompactor Facility	2012- ongoing
BN-550	Supercompacted Debris	2010-ongoing

BN-510 Supercompacted Debris: All types of TRU debris waste that is compacted at the AMWTP and will be shipped to WIPP under WSPF BN510. [76]

BN-538 Oversized Debris Items from Supercompactor Facility: Oversized debris waste items that are transferred out of the facility via the shredder chute. Examples of oversized waste items include hardened metals, milling tables, and large diameter solid bars. The debris items may also include large tools or equipment from the Facility. The waste also includes shredded boxes (wooden and steel) used as filler material. The waste may include gloves, wipes, plastic, PPE, bag cutters, tape, and sleeve stub generated during the packaging operations. [76]

BN-539 TRU Radioactive Only Debris Waste: Heterogeneous debris waste generated in WMF-676 from the treatment of RCRA empty containers including shredded boxes constructed of metal, wood, and fiber glassed reinforced plywood. Waste may also include associated PPE, bagging, leather gloves, wipes, and cutting tools. [76]

BN-540 Oversized Debris Items from Supercompactor Facility: Oversized debris waste items from boxed waste that are transferred out of the Facility because they are too large or cannot be size-reduced for supercompaction. Examples of oversized waste items include hardened metals, milling tables, and large diameter solid bars. The debris items may also include large tools or equipment from the Facility. The waste may include gloves, wipes, plastic, and PPE generated during the packaging operations. May contain <50% nondebris.[76]

BN-550 Supercompacted Debris: All types of TRU debris waste that is compacted at the AMWTP and will be shipped to WIPP in 100-gallon product drums typically containing multiple compacted 55-gallon drums of feedstock debris (i.e., pucks) associated with the IDCs listed in RPT-TRUW-83. Waste may also contain <50% by volume soils or homogeneous solids. [76]

7.2.2 Waste Generation

The AMWTP repackaged debris waste group is generated during treatment/size reduction of 55-gallon thin-walled containers (BN-508) and original generator packaged 55-gallon containers by supercompaction. After compaction, the drum pucks are loaded into 100-gallon drums (IDC BN-550 and BN-510). Several pucks are loaded into 100-gallon product drums for offsite shipment.

IDCs BN-538 and BN-540 are generated from WMF-676 box line operations (Section 3.6.5). IDC BN-539 may be generated in WMF-676 from the treatment of RCRA empty containers (Section 3.6.1). The empty boxes are shredded and packaged into new boxes. Oversized items received into the WMF-676 box line may be removed from authorized debris feedstock waste for subsequent management. Oversized debris waste items (BN-540) that are physically too large to be treated with existing S/C facility equipment, or have physical characteristics (e.g., density, hardness, etc.) that are outside the design specifications, may be repackaged and removed from the facility. Items that cannot be size-reduced in the hot maintenance cell (BN-538) are dropped down the shredder chute for packaging and subsequent management (Section 3.6.1).

The repackaged debris waste group is generated from a single process (i.e., repackaging). The waste produced is similar in material, physical form, and hazardous constituents, and is a single waste stream.

The authorized S/C feedstock debris waste is introduced into the S/C as any of the following:

- Direct feed
  - Original 55-gallon drums of authorized historically stored waste from the generator site
  - From the DWPG where drummed waste is sorted and repackaged into new 55-gallon drums (Section 3.6.2.2.2)
  - Secondary debris waste generated as a result of S/C operations (e.g., maintenance, container management, clean-outs, BN-508) (Sections 3.6.3.2.4 and 3.6.5.2.2)
- Box lines
  - Repackaged box line debris wastes (BN-508, silvers).

7.2.2.1 Areas and/or Building from which the Waste Was Generated

The waste is generated within the WMF-676 Facility.

7.2.2.2 Process Flow Diagrams

Figure 11 provides a general process flow diagram for repackageing operations.

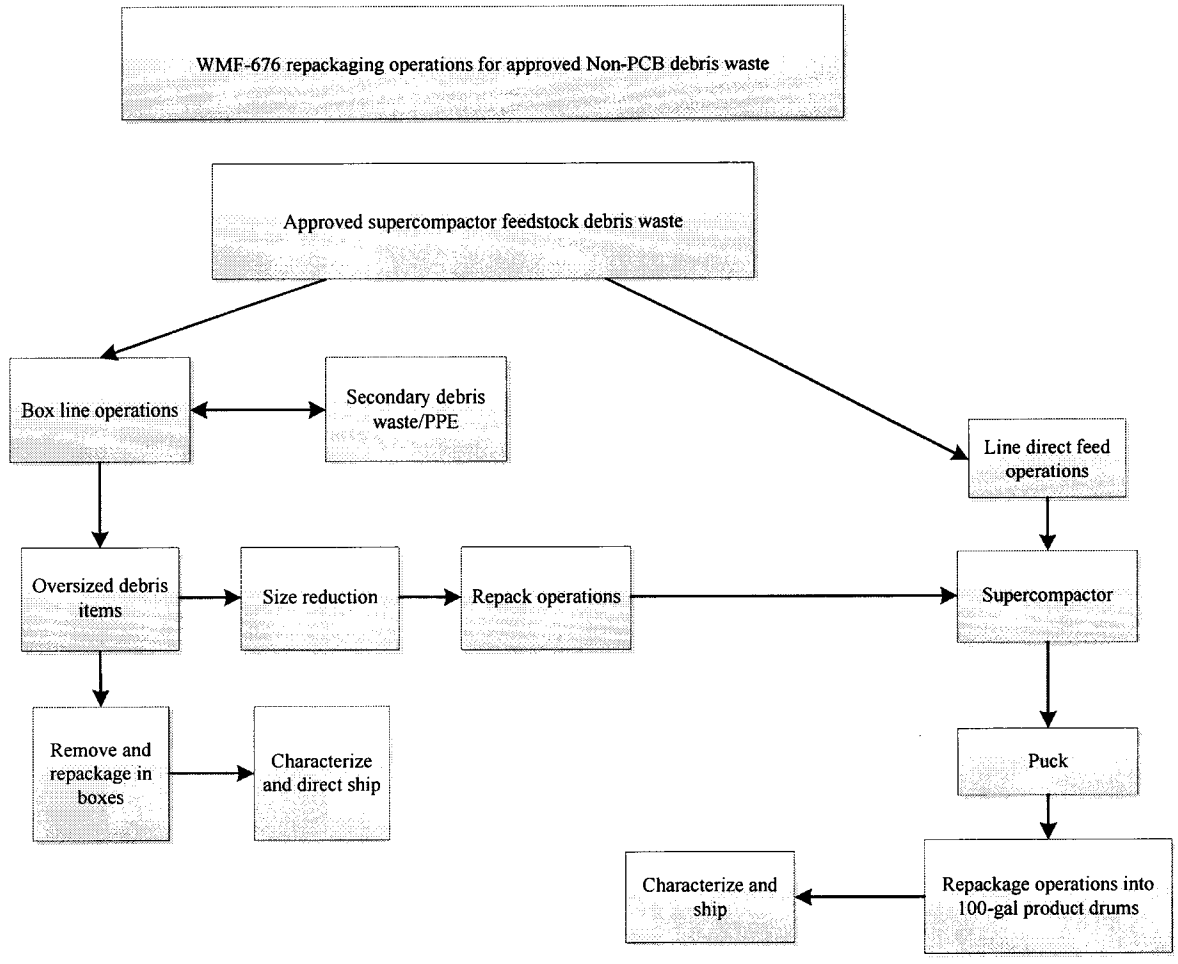

Figure 11. General flow diagram chart for supercompaction operations.

7.2.2.3 Material Inputs

The material inputs to the repackaged debris waste group are the authorized S/C feedstock. Repackaged debris waste includes heterogeneous debris such as paper and rags; gloves; wipes; asbestos; personal protective equipment (PPE); plastic and rubber items; filters; leaded gloves, aprons, bricks, and sheeting; metal with and without lead or cadmium; floor tiles; piping; sheet rock; insulation; glass; raschig rings; crucibles; fire brick; wood; Plexiglas®; Benelex®; pieces of equipment and tools; shredded boxes; lab waste; decontamination and decommissioning (D&D) waste; resins; graphite; grit; aerosol cans; asphalt and concrete from multiple DOE sites (i.e., RF, MD, BC, AE, AW, SD, LA, and RL) that are approved Supercompactor feedstock. The repackaged debris waste also includes AMWTP waste (BN) generated during Supercompactor

operations. Nonhazardous solidification agents SP-400®, Aquaset®, Aquaset II-G®, Micro-Cel® E, Petroset II® or Petroset II-G® may be added to the waste by AMWTP to absorb prohibited liquids within the box line prior to compaction. [122, 189, 190, 191, 192]

Repackaged debris may contain nondebris waste such as absorbed liquids, soil, dirt, sand, absorbent, or homogeneous solids. Nondebris waste will be less than 50% by volume in each 55-gallon drum of compacted debris or in the boxes of oversized debris.

RPT-TRUW-56, Acceptable Knowledge Document for INL Stored Transuranic Waste – Rocky Flats Plant Waste; RPT-TRUW-13, Acceptable Knowledge Document for INL Stored Waste-Mound Plant Waste; RPT-TRUW-04, Acceptable Knowledge Document for the Battelle Columbus Laboratories Building JN-4 Plutonium Laboratory; RPT-TRUW-79, Acceptable Knowledge Document for Materials and Fuels Complex Waste; RPT-TRUW-82, Acceptable Knowledge Document for Hanford Debris Waste Shipped to AMWTP; RPT-TRUW-89, Acceptable Knowledge Document for Argonne National Laboratory–East Waste, RPT-TRUW-91, Acceptable Knowledge Document for Pre-1980 INL-Exhumed SDA Waste, RPT-TRUW-93, Acceptable Knowledge Document for Los Alamos National Laboratory Debris Waste, and this report (i.e., RPT-TRUW-06, AMWTP AK for Newly Generated Waste), are the AMWTP AK documents for the RF, MD, BC, AW, RL, AE, SD, LA, and BN facilities (respectively). [16, 17, 18, 20, 21, 158, 193, 194]

7.2.2.4 Waste Volume

AMWTP supercompacted TRU debris wastes have been generated since March 2003 either as BN-510 or BN-550 through waste stream profiles BN510, BN510.1, BN510.2 and BN510.3. The current projected volume for supercompacted debris is presented in the waste stream profile package. [122, 141, 189, 190, 191, 192] See AMWTP WTS for current up-to date volumes for this waste.

Generation rates for shredded boxes and oversized waste items will be provided by the generator at the time of WIPP profiling, if generation is on-going. See AMWTP WTS for current up-to date volumes for each IDC.

7.2.3 Waste Packaging

Supercompacted TRU debris waste containers (i.e., pucks) are placed directly into 100-gallon product drums. There are no inner packagings or layers of confinement associated with the 100-gallon product drums. There is a filtered lid on the 100-gallon drums. If 100-gallon drums become damaged, they are packaged into SWBs for shipment to WIPP. Oversized items that are not conducive to supercompaction (BN-538 and BN-540) are packaged in boxes. The empty shredded boxes are packaged in boxes.

7.2.4 Waste Characterization

The AMWTP general approach to characterization is described in Section 3.9.

Newly generated AMWTP repackaged debris waste has been historically managed as mixed waste. The AK for newly generated AMWTP debris waste associated with the AMWTP Supercompactor operations (e.g., BN-550) is based on related generator AK summary reports, PK, the RCRA mixture and derived-from rules, applicable HWDs, and HWNs associated with Supercompactor feedstock debris waste. AK characterization is augmented by VE and NDA. [5]

7.2.4.1 Identification of EPA HWNs

The newly generated repackaged debris waste HWNs/constituents are based on related generator AK summary reports, PK (e.g., HWNs associated with authorized Supercompactor feedstock), applicable Waste Services HWDs, the RCRA mixture and the RCRA derived from rules. The characterization results are documented in RPT-TRUW-12, the applicable HWDs, and the applicable WIPP-approved WSPF. [5, 122, 141, 189, 190, 191, 192]

7.2.4.1.1 Ignitability

The newly generated repackaged debris wastes do not meet the 40 CFR 261.21 definition of ignitability. The newly generated repackaged debris waste is not a liquid, an ignitable compressed gas, or an oxidizer. Finally, the waste is not capable of causing fire through friction, absorption of moisture, or spontaneous chemical change. Containers that are identified as having prohibited liquids may be treated using Aquaset®, Aquaset II-G®, Petroset II®, Petroset IIG®, Micro-Cel® E, PIG®, or SP-400® absorbents to ensure that the waste is acceptable for disposal at WIPP. [130, 131, 132, 133, 162] The newly generated repackaged debris waste does not exhibit the characteristic of ignitability (D001). [5, 16, 17, 18, 20, 122, 130, 132, 133, 143, 144, 145]

7.2.4.1.2 Corrosivity

The repackaged debris waste does not meet the 40 CFR 261.22 definition of corrosivity. The supercompacted debris waste is not liquid waste and does not contain liquids in excess of WIPP-WAC limits. If found, liquid in excess of WIPP-WAC limits will be removed or treated (absorbed) prior to supercompaction and WIPP disposal. Containers that are identified as having prohibited liquids may be treated using Aquaset®, Aquaset II-G®, Petroset II®, Petroset II-G® or Micro-Cel® E, or SP-400® absorbents to ensure that the waste is acceptable for disposal at WIPP. The newly generated repackaged debris waste does not exhibit the characteristic of corrosivity (D002). [5, 16, 17, 18, 20, 122, 130, 132, 133, 143, 144, 145]

7.2.4.1.3 Reactivity

The repackaged debris wastes do not meet the 40 CFR 261.23 definition of reactivity. Repackaged debris is not a liquid waste.

The repackaged debris waste is stable and will not undergo violent chemical change, react violently with water, form potentially explosive mixtures with water, or generate toxic gases, vapors, or fumes when mixed with water. The waste does not contain sulfide waste which, when exposed to a pH between 2 and 12.5, can generate toxic gases, vapors, or fumes in a quantity sufficient to present a danger to human health or the environment. The waste is not capable of

detonation or explosive reaction if subjected to a strong initiating source if heated under confinement. The waste is not readily capable of detonation or explosive decomposition or reaction at standard temperature and pressure. The wastes do not contain explosive materials and are not forbidden explosives or Division 1.1, 1.2, or 1.3 (Class A or B) explosives as defined in 49 CFR Part, 173. Although the waste contains wastes that are assigned F006, F007, and F009 listed HWNs that are associated with cyanide electroplating operations, the waste when exposed to a pH between 2 and 12.5 will not generate toxic gases, vapors, or fumes in a quantity sufficient to present a danger to human health or the environment. This nonreactive position is based on AMWTP AK documents that debris waste being used as feedstock is a nonreactive RCRA waste. This waste does not exhibit the characteristic of reactivity (D003).[16, 17, 18, 20, 122, 143, 144, 145]

Any containers that are identified as having prohibited liquid may be treated using: Aquaset®, Aquaset II-G®, Petroset II® or Petroset IIG®, Micro-Cel® E, PIG®, or SP-400® absorbents to ensure that the waste is acceptable for disposal at WIPP. [130, 131, 132, 133, 162]

7.2.4.1.4 Toxicity Characteristic

The repackaged debris waste contains RCRA toxicity constituents associated with toxicity characteristic metals and organics. The RCRA toxicity characteristic metals and organics assigned to repackaged debris waste are listed in RPT-TRUW-83 and the applicable HWDs. [5, 16, 17, 18, 20, 122, 130, 132, 133, 143, 144, 145, 189, 190, 191, 192]

7.2.4.1.5 Listed Waste

7.2.4.1.5.1 F-Listed HWNs

The repackaged debris waste is assigned F-listed HWNs listed in RPT-TRUW-83 and the applicable HWDs. [5, 16, 17, 18, 20, 122, 130, 132, 133, 141, 143, 144, 145, 189, 190, 191, 192]

Nonhalogenated F003 solvent constituents (e.g., acetone, cyclohexanone, ethyl benzene, ethyl ether, methanol, methyl isobutyl ketone, n-butly alcohol, and xylenes) were identified in the AK and PK record as contaminants associated with the Supercompactor debris waste feedstock. The repackaged debris waste does not exhibit the characteristic of ignitability. Therefore, the F003 HWN is not assigned to the repackaged debris waste. [5, 16, 17, 18, 20, 122, 130, 132, 133, 141, 143, 144, 145]

The HWN F004 (cresols and nitrobenzene) were assigned based on AK documentation associated with AE, AW, and RL feedstock. The resultant supercompacted debris waste retains the listed HWNs assigned to the Supercompactor feedstock based on current regulatory requirements (i.e., the RCRA derived from rule). Therefore, supercompacted debris waste is assigned the EPA HWN F004. The HWN F005 (2-ethoxyethanol, 2-nitropropane, benzene, carbon disulfide, isobutanol, MEK, pyridine, and toluene) were assigned based on AK documentation associated with RF, MD, BC, AE, AW, and RL feedstock. Therefore, supercompacted debris waste is assigned the EPA HWN F005. The HWNs F006, F007 and F009 were assigned based on AK documentation associated with RF feedstock and HWNs F007 and

F009 were also assigned based on AK documentation associated with MD feedstock. Therefore, supercompacted debris waste is assigned the F006, F007, and F009 EPA HWNs. (5, 16, 17, 18, 20, 122, 130, 132, 133, 141, 143, 144, 145)

7.2.4.1.5.2 P-, U- and K-Listed HWNs

The repackaged debris waste and the feedstock debris are not currently classified as a P-, U- or K-listed hazardous waste. The repackaged debris waste is not discarded, unused, commercial chemical products, off-specification species, or a manufacturing intermediate; nor does it contain spill residues thereof that would meet the listing of P- or U-listed hazardous waste as identified in 40 CFR 261.33. In addition, the TRU repackaged debris and feedstock debris wastes were not mixed with, or derived from the treatment, storage, or disposal of P- or U-listed hazardous waste. As a result, P- or U-listed HWNs are not assigned to repackaged debris waste. (5, 16, 17, 18, 20, 122, 130, 132, 133, 141, 143, 144, 145, 189, 190, 191, 192)

The AMWTP does not use commercial chemicals containing beryllium powder. The repackaged TRU debris and feedstock debris may be contaminated with trace quantities of beryllium (e.g., less than one percent of the waste by weight). Although repackaged waste may contain beryllium contamination, the beryllium contamination is only associated with spent forms of beryllium; it is not associated with commercial chemical product, an off-specification species, a manufacturing intermediate a container residue, or a spill residue thereof. Based on this information, the P015 HWN does not apply to repackaged debris waste. (5, 16, 17, 18, 20, 122, 130, 132, 133, 141, 143, 144, 145, 189, 190, 191, 192)

The AMWTP does not use hydrofluoric acid at the site. Although hydrofluoric acid was identified as a chemical used (for its intended purpose) during plutonium processing at some of the generator sites, AK indicates that only spent forms of hydrofluoric acid would have contaminated the repackaged debris waste. The repackaged debris and feedstock debris does not contain and was not derived from an unused commercial chemical product, an off specification species thereof, or a manufacturing intermediate that would be classified as a U134 HWN. Based on this information, the U134 HWN does not apply to repackaged debris waste. (5, 16, 17, 18, 20, 122, 130, 132, 133, 141, 143, 144, 145, 189, 190, 191, 192)

The repackaged debris wastes are not classified as K-listed hazardous waste. The materials in the wastes are not hazardous waste from specific sources since they were not generated from the processes listed in 40 CFR 261.32. The repackaged debris waste and feedstock debris does not contain and was not derived from waste that would be associated with specific sources associated with a K-listed HWN. Therefore, the repackaged waste is not K-listed hazardous waste. (5, 16, 17, 18, 20, 122, 130, 132, 133, 141, 143, 144, 145, 189, 190, 191, 192)

7.2.4.2 Radionuclide Content

Radionuclide content of AMWTP waste is described in Section 3.7. The radionuclides expected to be quantifiable or calculated by NDA technique in the repackaged debris waste are those identified in RPT-TRUW-07 for RF, MD, AE, BC, AW, SD, LA, and RL. The predominant radionuclides by activity for the waste stream are ^{239}Pu, ^{238}Pu, and ^{240}Pu; however,

some TRU waste containers may have other TRU nuclides (e.g., ^{241}Am, ^{237}Np) that are predominant for that container. (83)

7.2.4.3 Prohibited Items

Prohibited items for the AMWTP S/C and WAP/WAC disposal at WIPP differ. The AMWTP utilizes RTR/VE to evaluate each container for both AMWTP facility and WIPP-prohibited items. (34, 37, 40, 61) WIPP and AMWTP S/C prohibited items are removed and/or treated as applicable (Section 3.6.5.1.2).

Supercompaction is the treatment for pressurized aerosol containers with a total liquid volume of less than or equal to 49 ml and containers with observable liquid not greater than 5% by volume of the container in direct feedstock 55-gallon drums. Supercompaction is also the treatment for unprotected sharp objects and sealed containers greater than 4 liters that do not contain prohibited liquids. Because there are no layers of confinement following supercompaction, it is also the treatment for excess layers of confinement. Items/materials prohibited from the Supercompactor are:

- PCBs or PCB-contaminated waste: To prevent PCB cross-contamination and additional permit requirements (e.g., TSCA), the S/C debris wastes that contain TSCA regulated materials such as PCBs >50 PPM are not authorized for supercompaction. Repackaged debris wastes and the TRU feedstock debris waste are not PCB contaminated (i.e., >50 ppm). (37, 40, 61, 150)

- Containerized or free elemental mercury (identified as being detrimental to the S/C seals/gaskets) (37, 40, 61)

- Reactive wastes (11)

- Containerized liquids, as determined by RTR to be in excess of 5% of the waste volume (11)

- Pressurized aerosol cans with total observable liquids greater than 49 ml. (11)

Debris waste feedstock containers that are identified as containing WIPP-prohibited items during RTR or VE are treated in the box line, the prohibited items removed, supercompacted, or are rejected, as appropriate.

Prohibited items that can be treated in SCW to remove the prohibited characteristic are managed as newly generated waste. Containers with WIPP-prohibited liquids may be treated using nonhazardous solidification agents (e.g., SP-400®, Aquaset®, Aquaset II-G®, Petroset II® or Petroset II-G® or Micro-Cel® E) to render the waste acceptable prior to shipment. Newly generated waste is characterized and assigned to an appropriate waste stream. In the event the treatment renders a debris waste form that can be compacted, it is included as IDC BN-508.

Repackaged debris waste will not contain WIPP-prohibited items.

7.2.4.4 Identification of PCBs

PCB items (i.e., RTR/VE) are not authorized for supercompaction or repackaged as part of this waste stream. Authorized feedstock debris waste from non-AMWTP generators (current and historically) is not and have not been classified as having >50 ppm PCBs by the original generators. [5, 186]

Repackaged TRU debris (and associated feedstock debris waste) is classified as non-PCB waste (i.e., <50 ppm). [122, 141, 189, 190, 191, 192]

7.3 Secondary Heterogeneous Debris Waste from Offsite Waste

7.3.1 Waste Description

Heterogeneous debris waste is routinely generated as a result of supporting offsite waste characterization (e.g., solid sampling, HSG, etc.). Due to potential variability in hazardous constituents (and HWNs) over time, secondary debris waste generated from characterization of DOE offsite is given a unique IDC to ensure compliant storage and handling and for purposes of WIPP profiling (e.g., BN-520 and BN-521).

AMWTP newly generated secondary debris waste that is generated from offsite waste management may contain any type of debris waste (e.g., paper and rags; gloves; wipes; personal protective equipment [PPE]; plastic and rubber items; absorbent PIGs® [e.g., mats, blankets, socks, etc.], filters; metal debris]). TRU heterogeneous debris waste generated from characterization of offsite waste may contain small amounts of nondebris waste such as soil/dirt and/or homogeneous solids (e.g., from glovebox clean-out). Nonhazardous solidification agents: SP-400®, Aquaset®, Aquaset II-G®, Petroset II®, Petroset II-G® or Micro-Cel® E absorbents may also be added to the waste by AMWTP to absorb prohibited liquids in response to PI treatment and/or spill cleanup activities. Nondebris waste will be less than 50% by volume in the debris waste container.

Secondary debris waste from offsite waste management is described in HWDs: 010912-01, 061610-01, and 081110-01, and PK, as documented by the AMWTP Waste Services group. TRU debris waste generated from offsite waste has been generated since 2007 (see Table 3.1 for a list of offsite generators). Table 7.4 provides dates of generation for secondary debris waste from offsite waste management.

Table 7.4. Secondary debris waste generated from offsite waste IDCs, waste descriptions, and generation dates.

IDC	Description	Generation Date*
BN-520	TRU PCB Secondary Debris Generated from Offsite Waste	2007-ongoing
BN-521	TRU Secondary Debris Generated from Offsite Waste	2007-ongoing
*Earlier generation date for newly generated waste may be identified and will be evaluated on a case-by-case basis.		

IDC BN-520 TRU PCB Secondary Debris Generated from Offsite Waste: heterogeneous PCB secondary debris generated from characterization, treatment, storage, and other waste management operations conducted at the AMWTP of offsite wastes that are **not** profiled by AMWTP for shipment to WIPP. The debris may include PCB items, PPE, tarps, tools, PIGs®/mats, HEPA filters, smear paper, etc., and may contain <50% by volume nondebris waste such as soil and/or homogeneous solids. (76)

IDC BN-521 TRU Secondary Debris Generated from Offsite Waste: heterogeneous secondary debris generated from characterization, treatment, storage, and other waste management operations conducted at the AMWTP of offsite wastes that are **not** profiled by AMWTP for shipment to WIPP. The debris may include PPE, tarps, tools, PIGs®/mats, HEPA filters, smear paper, etc., and may contain <50% by volume nondebris waste such as soil and/or homogeneous solids. (76)

7.3.2 Waste Generation

BN-520 and BN-521 are generated primarily as a result of solid sampling offsite nondebris waste within WMF-634 (Section 3.6.4). DOE offsite homogeneous solid and soil (i.e., S3000 and S4000) wastes received by the AMWTP Offsite Waste Program and are solid sampled by AMWTP in support of CCP waste profiling. Debris waste resulting from solid sampling or waste container handling of PCB-contaminated waste is assigned BN-520. Debris waste resulting from solid sampling or waste container handling of non-PCB-contaminated waste is assigned BN-521.

The BN-520 and BN-521 heterogeneous debris wastes are primarily generated as a result of solid sampling of S3000 and S4000 wastes. Additional support activities that have the potential to generate secondary debris waste from offsite waste management include, but are not limited to: radiological monitoring, maintenance, filter change outs, general container movement/management, and spill response activities associated with support of TRUPACT-II Authorized Methods for Payload Control (TRAMPAC) requirements.

7.3.2.1 Areas and/or Building from which the Waste Was Generated

The waste is generated primarily within WMF-634.

7.3.2.2 Process Flow Diagrams

The waste process flow diagram for offsite waste characterization is presented in Figure 12.

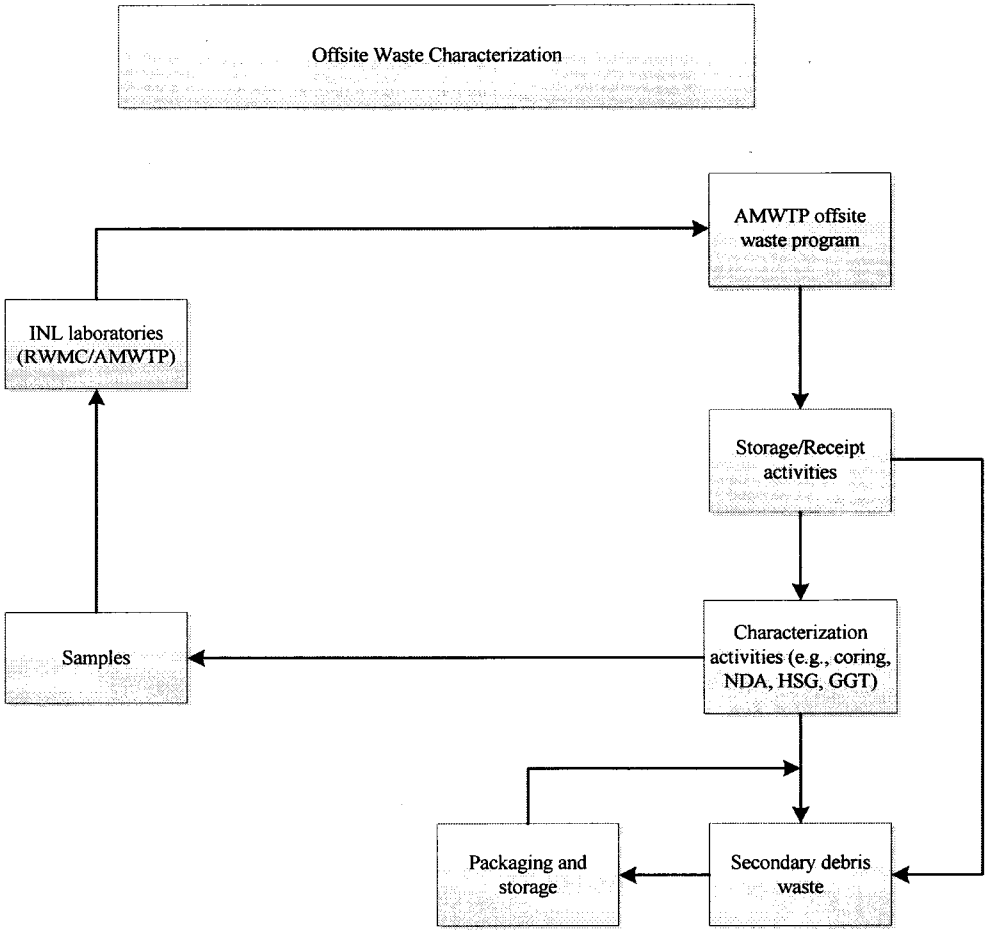

Figure 12. Offsite waste characterization and support activities.

7.3.2.3 Material Inputs

Secondary debris waste generated from offsite waste may contain any type of debris waste (e.g., paper and rags; gloves; wipes; PPE; plastic and rubber items; absorbent PIGs® [e.g., mats, blankets, socks, etc.], filters; metal debris). Waste containers may also contain <50% by volume homogeneous solids (e.g., sludges and absorbents) and soil.

Material inputs are identified through PK or AK provided to the AMWTP from the offsite generator and from information provided by the AMWTP waste generator, AMWTP Waste Services group, and the TRU Program. (5, 31, 100, 101, 102, 103, 104, 105, 106, 107, 108, 109, 110, 111, 112, 113, 114, 115, 116, 117, 118, 119, 120, 142, 173)

7.3.2.4 Waste Volume

Generation rates will be provided by the generator at the time of WIPP profiling, if generation is ongoing. See AMWTP WTS for current up-to-date volumes for each IDC within this waste.

7.3.3 Waste Packaging

Secondary debris wastes from offsite waste management are packaged in accordance with applicable AMWTP procedures (e.g., INST-OI-24). [25]

7.3.4 Waste Characterization

The AMWTP general approach to characterization is described in Section 3.9. Secondary debris waste from offsite waste management has been historically managed as mixed wastes. The AK for secondary debris waste from offsite waste management is based on PK, the RCRA mixture and derived-from rules, HWNs associated with the waste received from the offsite facility and the HWDs. AK characterization is augmented by VE, RTR and NDA. [5]

7.3.4.1 Identification of EPA HWNs

The HWNs/constituents associated with secondary debris wastes from offsite waste management are based on: PK (e.g., HWNs associated with the offsite waste), the RCRA mixture and the RCRA derived-from rules, generator input, and Waste Services determinations. The characterization results are documented in Waste Services HWDs. Waste constituents and HWNs assigned to the secondary debris wastes are identified in the Waste Services HWDs. [5, 31, 100, 101, 102, 103, 104, 105, 106, 107, 108, 109, 110, 111, 112, 113, 114, 115, 116, 117, 118, 119, 120, 142, 173]

7.3.4.1.1 Ignitability

Secondary debris waste from offsite waste does not meet the 40 CFR 261.21 definition of ignitability. The newly generated secondary debris wastes from offsite waste management are not a liquid, an ignitable compressed gas, or an oxidizer. Finally, the waste is not capable of causing fire through friction, absorption of moisture, or spontaneous chemical change. Containers that are identified as having prohibited liquids may be treated using Aquaset®, Aquaset II-G®, Petroset II®, Petroset II-G® or Micro-Cel® E, PIG®, or SP-400® absorbents to ensure that the waste is acceptable for disposal at WIPP. [130, 131, 132, 133, 162] Waste constituents and HWNs assigned to the secondary debris wastes are identified in the Waste Services HWDs. [31]

7.3.4.1.2 Corrosivity

The newly generated secondary debris waste from offsite waste management does not meet the 40 CFR 261.22 definition of corrosivity. The waste is not liquid waste and does not contain liquids in excess of WIPP-WAC limits. Containers that are identified as having prohibited liquids may be treated using Aquaset®, Aquaset II-G®, Petroset II®, Petroset II-G® Micro-Cel® E,

PIG, or SP-400 absorbents to ensure that the waste is acceptable for disposal at WIPP. [130, 131, 132, 133, 162] Waste constituents and HWNs assigned to the secondary debris wastes are identified in the Waste Services HWDs. [31]

7.3.4.1.3 Reactivity

The newly generated secondary debris waste from offsite waste management does not meet the 40 CFR 261.23, Characteristic of Reactivity, definition of reactivity. Secondary debris waste from offsite waste management is not a liquid waste. The AMWTP does not accept reactive waste from offsite generators.

The secondary debris waste from offsite waste management is stable and will not undergo violent chemical change, react violently with water, form potentially explosive mixtures with water, or generate toxic gases, vapors, or fumes when mixed with water. The waste does not contain sulfide waste which, when exposed to a pH between 2 and 12.5, can generate toxic gases, vapors, or fumes in a quantity sufficient to present a danger to human health or the environment. The waste is not capable of detonation or explosive reaction if subjected to a strong initiating source if heated under confinement. The waste is not capable of detonation or explosive decomposition or reaction at standard temperature and pressure. The materials do not contain explosive material and are not forbidden explosives or Division 1.1, 1.2, or 1.3 (Class A or B) explosives as defined in 49 CFR Part 173. Although the waste may contain wastes that are assigned F006, F007, and F009 listed HWNs that are associated with cyanide electroplating operations, the waste when exposed to a pH between 2 and 12.5 will not generate toxic gases, vapors, or fumes in a quantity sufficient to present a danger to human health or the environment. Waste constituents and HWNs assigned to the secondary debris wastes are identified in the Waste Services HWDs. [31] This waste does not exhibit the characteristic of reactivity (D003).[31]

7.3.4.1.4 Toxicity Characteristic

Newly generated secondary debris wastes from offsite waste management may meet the definition of toxicity for metals and organics as defined in 40 CFR 261.24. Waste constituents and HWNs assigned to the secondary debris wastes are identified in the Waste Services HWDs. (5, 31, 100, 101, 102, 103, 104, 105, 106, 107, 108, 109, 110, 111, 112, 113, 114, 115, 116, 117, 118, 119, 120, 142, 173)

7.3.4.1.5 Listed Waste

Newly generated secondary debris waste generated from offsite waste may meet the definition for an F-listed hazardous waste. Waste constituents and HWNs assigned to the secondary debris wastes are identified in the Waste Services HWDs. [5, 31, 100, 101, 102, 103, 104, 105, 106, 107, 108, 109, 110, 111, 112, 113, 114, 115, 116, 117, 118, 119, 120, 142, 173]

7.3.4.1.5.1 P- and K-Listed HWNs

Newly generated secondary debris wastes from offsite waste management does not currently meet the listing of P or K- listed hazardous waste as identified in 40 CFR 261.33. Waste constituents and HWNs assigned to the secondary debris wastes are identified in the

Waste Services HWDs. [5, 31, 100, 101, 102, 103, 104, 105, 106, 107, 108, 109, 110, 111, 112, 113, 114, 115, 116, 117, 118, 119, 120, 142, 173]

7.3.4.1.5.2 U-Listed HWNs

Newly generated secondary debris wastes from offsite waste management include U-listed hazardous waste. Currently U151 is assigned to a limited subpopulation of debris from coring activities. Waste constituents and HWNs assigned to the secondary debris wastes are identified in the Waste Services HWDs. [5, 31, 100, 101, 102, 103, 104, 105, 106, 107, 108, 109, 110, 111, 112, 113, 114, 115, 116, 117, 118, 119, 120, 142, 173]

7.3.4.2 Radionuclide Content

Radionuclide content of AMWTP waste is described in Section 3.7. The radionuclides expected to be quantifiable or calculated by NDA technique in the newly generated secondary debris wastes from offsite waste management are those identified in RPT-TRUW-07. TRU heterogeneous debris waste generated from offsite waste is generated during management of waste from multiple generators.

7.3.4.3 Prohibited Items

Newly generated secondary debris wastes from offsite waste management are not expected to contain WIPP-prohibited items. AMWTP Waste Service's hazardous waste determinations, AMWTP packaging procedures, RTR and/or VE are used to support the absence of prohibited items for newly generated waste. Drums containing prohibited items will not be shipped to WIPP.

If found, WIPP-prohibited item associated with TRU heterogeneous debris waste generated from offsite waste will undergo treatment prior to shipment to WIPP or will be managed separately. Containers with WIPP-prohibited liquids may be treated using nonhazardous solidification agents (e.g., SP-400®, Aquaset®, Aquaset II-G®, Petroset II®, Petroset II-G® or Micro-Cel® E absorbents) to render the waste acceptable prior to shipment.

7.3.4.4 Identification of PCBs

Newly generated secondary debris wastes from offsite waste management may be contaminated with PCBs in concentrations >50 ppm. PCB determinations for offsite waste during characterization is dependent upon the status of the waste as received from offsite DOE facilities. Waste that is generated from characterization of offsite waste retains the PCB classification as previously profiled. PCB-contaminated debris waste from offsite waste characterization is assigned BN-520. Non-PCB-contaminated debris waste from offsite waste characterization is assigned BN-521. Waste constituents and HWNs assigned to the secondary debris wastes are identified in the Waste Services HWD. [5, 31, 100, 101, 102, 103, 104, 105, 106, 107, 108, 109, 110, 111, 112, 113, 114, 115, 116, 117, 118, 119, 120, 142, 173]

7.4 AMWTP Heterogeneous PCB Debris Waste

7.4.1 Waste Description

The following AMWTP heterogeneous PCB debris waste group is composed of PCB general/routine debris waste that may be generated in multiple buildings. The AMWTP heterogeneous PCB debris waste is developed to establish a separate grouping for AMWTP heterogeneous PCB debris waste that is not generated from offsite characterization activities (Section 7.3). The AMWTP heterogeneous PCB debris waste is bounded by hazardous waste constituents and HWNs associated with retrieved historically stored waste. PCB-contaminated waste from management of offsite waste, BN-520, may be added to this grouping at a later date (see Section 7.3 for BN-520).

AMWTP heterogeneous PCB debris waste may contain any type of debris waste (e.g., PCB items [e.g., ballast/capacitors/transformers], paper and rags; gloves; wipes; PPE; plastic and rubber items; absorbent PIGs® [e.g., mats, blankets, socks, etc.], filters; metal debris).

AMWTP heterogeneous PCB debris waste may contain small amounts of nondebris waste such as soil/dirt and/or homogeneous solids (including absorbed liquids). Nonhazardous solidification agents: SP-400®, Aquaset®, Aquaset II-G®, Petroset II®, Petroset II-G® Soil-Sement, or Micro-Cel® E absorbents may also be added to the waste by AMWTP to absorb prohibited liquids in response to PI treatment and/or spill cleanup activities. Nondebris waste will be less than 50% by volume in the debris waste container. [130, 131, 132, 133, 178]

The AMWTP heterogeneous PCB debris waste is described in HWDs 011210-01, 012810-01, 060509-02, 060712-01, 061010-03, 061509-01, 062309-01, 062309-11, 062309-13, and 070505-02, and PK, as documented by the AMWTP Waste Services group. Table 7.5 provides a list of IDCs included in this waste and dates of generation for each IDC.

Table 7.5. AMWTP heterogeneous PCB debris waste IDCs, waste descriptions, and generation dates.

IDC	Description	Generation Date*
BN-520	TRU PCB Secondary Debris Generated from Offsite Waste	2007-ongoing
BN-523	Pad 1 Cells 1 and 2 PCB Debris	TBD
BN-536	TRU Empty Containers with PCBs	2005-ongoing
BN-604	Debris TSCA/PCB	2005-ongoing
*Earlier generation date for AMWTP heterogeneous PCB debris waste may be identified and will be evaluated on a case-by-case basis.		

IDC BN-520 TRU PCB Secondary Debris Generated from Offsite Waste: (see Section 7.3 for BN-520).

BN-523 Pad 1 Cells 1 and 2 PCB Debris: AMWTP heterogeneous PCB debris waste generated during repackaging of loose waste within Cells 1 and 2 of Pad 1 that may be

commingled with PCB waste (e.g., homogeneous solids; interstitial soil; PCB liquids [e.g., oily liquids], or large PCB items including capacitor, transformers, transformer; electric motors, or hydraulic equipment). Waste may contain any type of debris waste (e.g., cloth, paper, plastics, glass, rubber and metal debris). Waste may also contain <50% by volume soils or homogeneous solids (e.g., sludges).

BN-536 TRU Empty Container with PCBs: Empty cargo containers, boxes, 55-gallon drums or 83/85-gallon overpacks generated during the retrieval, repack, or treatment processes that may contain PCBs. (76)

BN-604 Debris TSCA/PCB: Heterogeneous PCB debris waste generated by AMWTP including waste generated during handling of TSCA PCB-contaminated waste or waste that contains PCB items other than PCB debris waste generated in WMF-676. Waste also includes loose debris that is PCB-contaminated or commingled with other PCB waste and debris generated during the cleanup of spills or leaks from waste containers that are PCB waste or are suspected to be PCB-contaminated or contain PCB items (e.g., SDA IDCs). The waste may also include intact containers of debris known or suspected to be commingled with PCB waste and/or may contain any type of debris waste (e.g., cloth, paper, plastics, glass, rubber and metals debris). (76, 195)

Waste may also contain <50% by volume soils or homogeneous solids (e.g., sludge).

7.4.2 Waste Generation

AMWTP heterogeneous PCB debris waste includes debris waste generated as a result of: routine waste handling and retrieval operations, repackaging of loose waste, radiological/chemical monitoring, spill response activities, decontamination, treatment, equipment maintenance, and characterization (e.g., VE, HSG, GGT, and solid sampling). AMWTP heterogeneous PCB debris is generated as a result of providing overall support to TRU waste operations retrieved waste containers and occurs in various storage areas throughout the AMWTP.

BN-523 is generated at the TSA-RE WMF-636 during retrieval of stored drums and repackaging of loose waste within Cells 1 and 2 of Pad 1.

BN-536 may be generated within WMF-628 through 636 and WMF-676 as a result of removing PCB waste from a container (Sections 3.6.1 through 3.6.5). Empty containers are generated as a result of removing all contained waste but the waste may have been or was contaminated with PCBs, contained PCB waste or contained breached PCB items. The containers are from retrieval, repackaging and/or treatment operations and can occur within various AMWTP operations. (Sections 1.0 through 3.0 of this document).

BN-604 may be generated during handling of TSCA PCB-contaminated waste or waste that contains PCB items within WMFs-628 through 636 (Sections 3.6.1 through 3.6.5). The waste includes, but not is limited to PCB waste generated by various site-wide AMWTP activities (excluding WMF-676) as a result of retrieval and general handling activities (e.g.,

waste repackaged loose debris found in cargos or bins); loose PCB items and PCB suspected waste generated from breached or leaking containers (e.g., RF Organic setup waste); and spill cleanup and decontamination activities associated with RF and ARP PCB-contaminated sludge (Sections 1.0 through 3.0 of this document). [5, 26, 30, 35] The IDC may also include intact containers of debris known or suspected to be commingled with PCB waste. Containers of ARP PCB-contaminated sludge have been known to weep liquids as a result of container deterioration during storage. Leaks/weeps from ARP containers are contained and decontaminated as necessary using rags, wipes and/or absorbent material. [76]

PCB decontamination involves a double-wash/-rinse and swipe sampling of the spill area. Nonhazardous Sunrise Exeter® and Simple Green® cleaning solutions are used for decontaminating PCB-contaminated areas. An optional decontamination step may include the use of acetone or hexane. Following decontamination activities, a wipe saturated with hexane is used to swipe a 100 cm^2 area of the decontaminated area, and the swipe sample is analyzed for PCB content to verify that PCB cleanup standards are met.

PCB decontamination involves pouring/applying Sunrise® cleaner/solvent to the area then using a scrubber (brush or pad) to scrub for about 1 min and then wiping up the liquid with a pad or towel. The area is then rinsed with Sunrise® cleaner/solvent by pouring/applying Sunrise® cleaner/solvent and letting it sit for 1 minute prior to wiping the spill area up with a pad or towel. A second wash is performed the same as the first wash. The second rinse uses either Sunrise® cleaner/solvent or Simple Green®. The product is poured/applied in the same manner as noted in the first rinse.

An optional decontamination solvent rinse using hexane or acetone may be required. When required, hexane or acetone is poured/applied to the spill area and then wiping up the liquid with a pad or towel.

Following decontamination, the spill area is sampled (e.g., 100 cm^2 area) and analyzed to determine a clean status. Swipe sampling of the PCB spill area includes the use of hexane. Hexane is placed on a swipe sample and a 100 cm^2 area is wiped down. The swipe sample is then sent to the onsite laboratory for PCB analysis. [30, 35, 126, 127, 149]

7.4.3 Areas or Building from which the Waste was Generated

The waste is primarily generated within WMFs-610 through -636 and WMF-676. [134]

7.4.3.1 Process Flow Diagrams

Process flow diagrams for AMWTP TRU heterogeneous PCB debris waste are developed based on generation activities and locations. Figure 13 provides the general process flow diagram that generates AMWTP heterogeneous PCB debris waste.

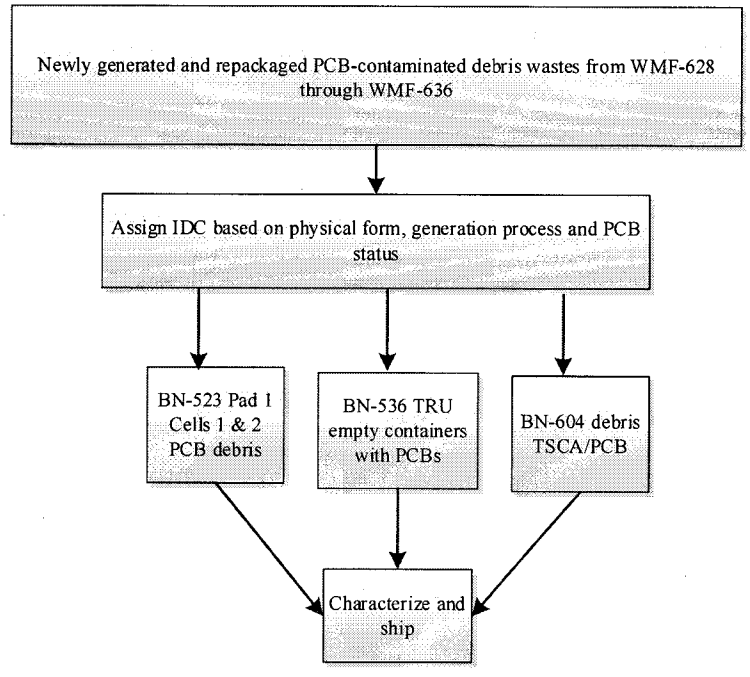

Figure 13. General PCB debris flow diagram for BN-523, BN-536, and BN-604.

7.4.4 Material Inputs

AMWTP heterogeneous PCB debris waste may contain any type of debris waste (e.g., PCB items [e.g., ballast/capacitors/transformers], paper and rags; gloves; wipes; PPE; plastic and rubber items; absorbent PIGs® [e.g., mats, blankets, socks], filters; metal debris). Waste containers may also contain <50% by volume homogeneous solids (e.g., sludges and absorbents) and soil. Material inputs are identified during various activities including, but not limited to input from VE and/or RTR and information provided by the AMWTP waste generator and the AMWTP Waste Services HWDs and PK. (134)

7.4.5 Waste Volume

Estimated volumes of heterogeneous PCB debris generated will be developed and incorporated into WIPP WSPFs and this document at the time of WIPP profiling.

Containers of each IDC identified in this waste group are documented in the AMWTP WTS when generated. See AMWTP WTS for current up-to-date volumes for each IDC within this waste.

7.4.6 Waste Packaging

AMWTP heterogeneous PCB debris waste is packaged in accordance with applicable AMWTP procedures (e.g., INST-OI-24). (25)

7.4.7 Waste Characterization

The AMWTP general approach to characterization is described in Section 3.9.

Newly generated AMWTP heterogeneous PCB debris waste has been historically managed as mixed wastes. The AK for newly generated AMWTP heterogeneous PCB debris waste is based on PK, generator input, and applicable Waste Services HWDs. AK characterization is augmented by VE, RTR and NDA. [5, 134]

7.4.7.1 Identification of EPA HWNs

Newly generated AMWTP heterogeneous PCB debris waste HWNs/constituents may be based on one or more of the following: PK (e.g., HWNs associated with authorized Supercompactor feedstock), the RCRA mixture and derived-from rules, generator input, Waste Services determinations. The characterization results are documented in a Waste Services HWD. Waste constituents and HWNs assigned to the newly generated AMWTP heterogeneous PCB debris waste are identified in the Waste Services HWDs. [5, 31, 61, 73]

7.4.7.1.1 Ignitability

AMWTP heterogeneous PCB debris wastes do not meet the 40 CFR 261.21 definition of ignitability. The AMWTP heterogeneous PCB debris waste is not expected to be a liquid, an ignitable compressed gas, or an oxidizer. If found, liquid in excess of WIPP-WAC limits will be removed or treated by absorption prior to WIPP shipment/disposal. Containers that are identified as having prohibited liquids may be treated using SP-400®, Aquaset®, Aquaset II-G®, Petroset II®, Petroset II-G® or Micro-Cel® E absorbents to ensure that the waste is acceptable for disposal at WIPP. The wastes are not compressed gas and do not contain compressed gas. The AMWTP heterogeneous PCB debris waste does not meet the U.S. DOT definition of an oxidizer as defined in 49 CFR 173. Finally, the waste is not capable of causing fire through friction, absorption of moisture, or spontaneous chemical change. The characterization results are documented in a Waste Services HWD. [5, 31, 130, 131, 132, 133, 134]

7.4.7.1.2 Corrosivity

AMWTP heterogeneous PCB debris waste does not meet the 40 CFR 261.22 definition of corrosivity. AMWTP heterogeneous PCB debris waste is not liquid waste and is not expected to contain liquids in excess of WIPP-WAC limits. If found, liquid in excess of WIPP-WAC limits will be removed or treated (absorbed) prior to WIPP shipment/disposal. Containers that are identified as having prohibited liquids may be treated using SP-400®, Aquaset®, Aquaset II-G®, Petroset II®, Petroset II-G® or Micro-Cel® E absorbents to ensure that the waste is acceptable for disposal at WIPP. The characterization results are documented in a Waste Services HWD. [5, 31]

7.4.7.1.3 Reactivity

AMWTP heterogeneous PCB debris waste does not meet the 40 CFR 261.23 definition of reactivity. AMWTP heterogeneous PCB debris waste is not a liquid waste. Any containers that are identified as having prohibited liquids may be treated using SP-400®, Aquaset®, Aquaset II-G®, Petroset II® or Petroset II-G®, or Micro-Cel® E absorbents to ensure that the waste is acceptable for disposal at WIPP. AMWTP heterogeneous PCB debris waste is stable and will not undergo violent chemical change, react violently with water, form potentially explosive mixtures with water, or generate toxic gases, vapors, or fumes when mixed with water. The waste does not contain sulfide waste which, when exposed to a pH between 2 and 12.5, can generate toxic gases, vapors, or fumes in a quantity sufficient to present a danger to human health or the environment. The waste is not capable of detonation or explosive reaction if subjected to a strong initiating source if heated under confinement. The waste is not readily capable of detonation or explosive decomposition or reaction at standard temperature and pressure. The wastes do not contain explosive material and are not forbidden explosives or Division 1.1, 1.2, or 1.3 (Class A or B) explosives as defined in 49 CFR Part, 173. Although some of the waste contains wastes are assigned F006, F007, and F009 listed HWNs and associated with cyanide electroplating operations, the waste, when exposed to a pH between 2 and 12.5, will not generate toxic gases, vapors, or fumes in a quantity sufficient to present a danger to human health or the environment. The characterization results are documented in applicable Waste Services HWDs. [5, 31, 134]

7.4.7.1.4 Toxicity Characteristic

The AMWTP newly generated heterogeneous PCB-contaminated debris contains RCRA toxicity constituents associated with toxicity characteristic metals and organics. Waste constituents and HWNs assigned to the newly generated AMWTP heterogeneous PCB debris waste are identified in the Waste Services HWDs. [5, 31, 134]

7.4.7.1.5 Listed Waste

AMWTP newly generated heterogeneous PCB wastes are assigned F-listed HWNs. Waste constituents and HWNs assigned to the newly generated AMWTP heterogeneous PCB debris waste are identified in the Waste Services HWDs.[5, 31, 134]

7.4.7.1.5.1 F-Listed HWNs

The characterization results are documented in a Waste Services HWD. The HWNs currently assigned to this waste are listed in the applicable HWDs. [5, 31, 134] h

7.4.7.1.5.2 P-, U- and K-Listed HWNs

AMWTP heterogeneous PCB debris waste is currently not classified as discarded, unused, commercial chemical products, off-specification species, a manufacturing intermediate, or contains spill residues thereof that would meet the listing of P- or U- listed hazardous waste as identified in 40 CFR 261.33. In addition, the AMWTP heterogeneous PCB debris waste was not

mixed with, or derived-from the treatment, storage, or disposal of P- or U-listed hazardous waste. The characterization results are documented in a Waste Services HWD. [5, 31, 134]

The AMWTP does not use commercial chemicals containing beryllium powder. The AMWTP heterogeneous PCB debris waste may be contaminated with trace quantities of beryllium (e.g., less than one percent of the waste by weight). Although AMWTP heterogeneous PCB debris waste may contain beryllium contamination, the beryllium contamination is only associated with spent forms of beryllium; it is not associated with commercial chemical product, an off-specification species, a manufacturing intermediate of a container residue, or a spill residue thereof. The characterization results are documented in a Waste Services HWD. [5, 31, 134]

The AMWTP does not use hydrofluoric acid at the site. Although hydrofluoric acid was identified as a chemical used (for its intended purpose) during plutonium processing at some of the generator sites, AK indicates that only spent forms of hydrofluoric acid would have contaminated AMWTP heterogeneous PCB debris waste. AMWTP heterogeneous PCB debris waste does not contain and was not derived from an unused commercial chemical product, an off specification species thereof, or a manufacturing intermediate that would be classified as a U134 HWN. The characterization results are documented in a Waste Services HWD. [5, 31, 134]

Potassium cyanide (P098) and Sodium cyanide (P106) are assigned to ARP waste shipments to WIPP. These HWNs do not apply to onsite management of ARP waste and secondary debris waste generated as a result of managing ARP waste by the AMWTP. [5, 31, 134]

7.4.8 Radionuclide Content

Radionuclide content of AMWTP homogeneous PCB debris waste is described in Section 3.7. The radionuclides expected to be quantifiable or calculated by NDA technique in the AMWTP heterogeneous PCB debris waste are those identified in RPT-TRUW-07. AMWTP heterogeneous PCB debris waste is generated during management of waste from multiple generators. The radionuclides expected in waste from each generator are identified in RPT-TRUW-07. [83]

7.4.9 Prohibited Items

AMWTP heterogeneous PCB debris waste is not expected to contain WIPP-prohibited items. AMWTP Waste Service's hazardous waste determinations, AMWTP packaging procedures, RTR and/or VE are used to support the absence of prohibited items for newly generated waste. Drums containing prohibited items will not be shipped to WIPP. [61, 73]

If found, WIPP-prohibited items associated with AMWTP heterogeneous PCB debris waste will undergo treatment prior shipment to WIPP or will be managed separately. Containers with WIPP-prohibited liquids may be treated using nonhazardous solidification agents (e.g., SP--400®, Aquaset®, Aquaset II-G®, Petroset II®, Petroset II-G® or Micro-Cel® E absorbents) to render the waste acceptable prior to shipment.

7.4.10 Identification of PCBs

AMWTP heterogeneous PCB debris wastes are known or suspected to be contaminated with PCBs in concentrations >50 ppm. The characterization results are documented in a Waste Services HWD. [5, 31, 134]

7.5 WMF-676 PCB-Contaminated Debris Waste

The following WMF-676 PCB-contaminated debris (i.e., BN-600) waste is composed of PCB general/routine debris waste that is generated within WMF-676. This waste may potentially be grouped with PCB waste described in Section 7.4.

7.5.1 Waste Description

WMF-676 PCB-contaminated debris waste may contain small amounts of nondebris waste such as soil/dirt and/or homogeneous solids (including absorbed liquids). Nonhazardous solidification agents SP-400®, Aquaset®, Aquaset II-G®, Petroset II®, Petroset II-G® or Micro-Cel® E absorbents may also be added to the waste by AMWTP to absorb prohibited liquids in response to PI treatment and/or spill cleanup activities. Nondebris waste will be less than 50% by volume in the debris waste container. [130, 131, 132, 133]

The WMF-676 PCB-contaminated debris waste is described in HWD 041811-03 and AK report RPT-TRUW-88. Table 7-6 provides a list of IDCs included in this waste group and dates of generation for WMF-676 PCB-contaminated debris. [134, 188]

Table 7.6. WMF-676 PCB-contaminated debris waste IDC, waste descriptions, and generation date.

IDC	Description	Generation Date
BN-600	WMF-676 PCB-Contaminated Debris	2005-ongoing

BN-600 WMF 676 PCB-Contaminated Debris: PCB-contaminated heterogeneous debris waste generated in WMF-676 from the remediation of PCB-prohibited wastes (e.g., removal, cleanout, spill cleanup, or treatment of PCB waste/items from box lines, SCW, or DWPG). The waste may include PCB electrical equipment (e.g., capacitors, ballast, transformers), PIG® mats, blankets, and pillows; size-reduced drum liners and empty containers; PPE; wipes, and Supercompactor feedstock debris that is PCB-contaminated due to PCB spills (e.g., paper and rags; gloves; wipes; asbestos; PPE; plastic and rubber items; filters; leaded gloves, aprons, bricks, and sheeting; metal with and without lead or cadmium; floor tiles, piping, sheet rock, insulation, and glass; raschig rings; crucibles; fire brick; wood; Plexiglas®; Benelex®; pieces of equipment and tools; graphite; grit; and asphalt and concrete). The waste may also contain <50% by volume of nondebris (e.g., soil and particulate absorbents). [76]

7.5.2 Waste Generation

PCB-contaminated debris waste is generated within WMF-676 during removal and/or treatment of prohibited PCB waste (e.g., PCB items from S/C feed and PCB liquids within RF organic setups). The WIPP and the AMWTP Supercompactor facilities prohibit various forms of PCB waste. Waste containers with any amount of PCB liquid are prohibited at the WIPP facility. The AMWTP Supercompactor prohibits waste with PCB concentration equal to or greater than 50 ppm PCBs from being compacted. (134, 188)

7.5.2.1 WMF-676 Prohibited PCB Liquid Treatment

This generation process has been discontinued.

Containers of RF organic setup wastes with prohibited PCB liquids are loaded into six drum overpacks for transport to the AMWTP WMF-676 south box line. Prior to treating the organic setups, the containers may be cut open, by the Brokk®. The waste in the bags is removed from the liners and placed in the south box line trough for treatment. The drum and liners are segregated from the waste and undergo size reduction. (136)

The removed organic setup waste is mixed with Micro-Cel® E absorbent using a remote manipulator (i.e., Brokk®) in the south box line trough to absorb the WIPP-prohibited PCB liquid. New 55-gallon containers with new rigid liners are transferred into the WMF-676 south box line import/export glovebox area. The new liners are removed and transferred to (placed in) a waste transfer container. The lined transfer container (without the waste) is transported to the south box line trough and loaded with treated organic setup waste. The treated organic setup waste is visually examined as it is loaded into lined transfer containers. (136, 137)

The transfer container is moved to the south box line import/export glovebox area. The liner (with treated organic setup waste) is transferred to a new 55-gallon container in the glovebox. The new lined container is transferred out of the south box line import/export glovebox area. (136)

7.5.2.2 WMF-676 Prohibited PCB Item Removal

Authorized debris feedstock to the Supercompactor is accepted into the north (and previously the south) box line. The waste is visually examined for WIPP and AMWTP Supercompactor PIs within the box line troughs. The Supercompactor feedstock is periodically identified as containing PCB items (e.g., PCB ballast, PCB capacitors). PCBs are prohibited within the AMWTP Supercompactor.

WIPP and AMWTP Supercompactor-prohibited PCB items (e.g., containers with PCB liquids, PCB ballast/capacitors/transformers) are removed/segregated from the box lines debris waste and managed separately to prevent compaction and possible PCB contamination within the Supercompactor. If PCB items are breached and/or leaking within the box line troughs, the PCB items and all waste materials generated from contact with PCB waste is removed from the box line trough and the trough area decontaminated. If required, PCB items removed from box line

operations may be transported to the WMF-676 DWPG or SCW for further treatment and repackaging. [37, 40, 61]

Prohibited PCB items found in Supercompactor direct-feed containers by means of RTR may be transported directly to WMF-676 DWPG or SCW for removal/segregation and/or treatment of PCB waste. [37, 40, 61] PCB liquids are prohibited at WIPP and PCBs greater than 50 ppm are prohibited from being processed in the AMWTP Supercompactor. [37]

7.5.2.3 WMF-676 Criticality Clean-Out

Periodic criticality clean-out operations may be conducted within the WMF-676 south box line after performing PCB treatment to remediate prohibited PCB liquids. Various secondary debris waste items may be generated from criticality clean-out operations within the WMF-676 south box line (e.g., PPE, rags, wipes). [138, 139]

7.5.2.4 WMF-676 Spill Cleanup

Spill cleanup of PCB waste can occur within the WMF-676 north or south box line areas, the DWPG, and/or SCW as a result of removing/segregating and/or treating prohibited PCB waste. Upon discovery of a PCB spill, the spilled material, as well as any material that comes into contact with PCBs, are removed and containerized. The area is then decontaminated using an EPA-approved/recommended decontamination activity. Various secondary debris waste items may be generated during spill cleanup activities within the WMF-676 (e.g., PCB electrical equipment [PCB ballast/capacitors/transformers], PPE, tools, rags, wipes, plastic, paper, wood, metal and glass, PIG® absorbent). [30, 35, 126, 127, 128, 129, 130, 131, 132, 133]

The Box Line Polychlorinated Biphenyl (PCB) Management Plan establishes guidelines for the cleanup of PCBs that inadvertently enter the AMWTF box lines. The use of these guidelines prevents non-PCB waste processed in the box lines from becoming contaminated with PCBs at concentrations above 50 ppm. Upon discovery of potential PCB contamination on a surface within the AMWTF box lines, the area will be shut down. An Environmental Representative will develop a written plan for the cleanup and confirmation sampling of the area. The area will be cleaned using a double/wash rinse methodology. After the PCB-contaminated surface has been cleaned, a series of surrogate swipes (100 square centimeter swipes) will be collected. The surrogate swipes will be collected in a manner to represent the entire surface area of the PCB cleanup. The swipes will then be surveyed for radionuclide activity to determine the alpha contamination remaining on the cleaned surface. The radiological swipe results will be compared to an alpha surrogate swipe threshold to determine if the area has been adequately cleaned for PCBs. If the alpha swipes are equal to or below the acceptable threshold level of 26,000 dpm, the area will be deemed adequately cleaned and can return to normal operations. However, if the alpha swipes are above the acceptable surrogate swipe threshold level, the PCB-contaminated surface will be cleaned again using the double wash/rinse method. The area will continue to be cleaned using this methodology until the alpha swipe samples show that the area has been cleaned to levels below the acceptable surrogate swipe threshold. [150]

Previously, WMF-676 PCB decontamination involves a double-wash/-rinse and swipe sampling of the spill area. Nonhazardous Sunrise Exeter® and Simple Green® cleaning solutions are used for decontaminating PCB-contaminated areas. An optional decontamination step may include the use of acetone or hexane. Following decontamination activities, a wipe saturated with hexane is used to swipe a 100 cm^2 area of the decontaminated area, and the swipe sample is analyzed for PCB content by the onsite laboratory to verify that PCB cleanup standards are met.[30, 35, 126, 127, 149]

PCB decontamination involves pouring/applying Sunrise® cleaner/solvent to the area then using a scrubber (brush or pad) to scrub for about 1 min and then the liquid is wiped up with a pad or towel. The area is then rinsed with Sunrise® cleaner/solvent by pouring/applying Sunrise® cleaner/solvent and letting it sit for 1 minute prior to wiping the spill area up with a pad or towel. A second wash is performed the same as the first wash. The second rinse uses either Sunrise® cleaner/solvent or Simple Green®. The product is poured/applied in the same manner as noted in the first rinse.

An optional decontamination solvent rinse using hexane or acetone may be required. When required, hexane or acetone is poured/applied to the spill area and then wiping up the liquid with a pad or towel. [30, 35, 126, 127, 149]

7.5.2.5 WMF-676 South Box Line Equipment Maintenance

This generation process has been discontinued due to no longer processing containers of RF organic setup wastes with prohibited PCB liquids in the AMWTP WMF-676 south box line (7.5.2.1).

The south box line equipment (e.g., Brokk® manipulator) is used to cut open containers, size-reduce, mix absorbents and load treated RF organic setup wastes into new containers assumed to be PCB contaminated. Periodically, personnel enter the south box line and perform maintenance as required on this equipment to ensure optimum operating functions (e.g., replacement of parts, oil changes, repair of the Brokk®). Decontamination may also be conducted on the equipment during maintenance work. PCB-contaminated debris is generated during maintenance and decontamination of equipment. [30, 134, 188]

7.5.3 Areas or Building from which the Waste was Generated

The waste is generated within WMF-676. [134, 188]

7.5.4 Waste Diagram

Figure 14 provides the waste diagram for primary activities that generate WMF-676 PCB contaminated waste.

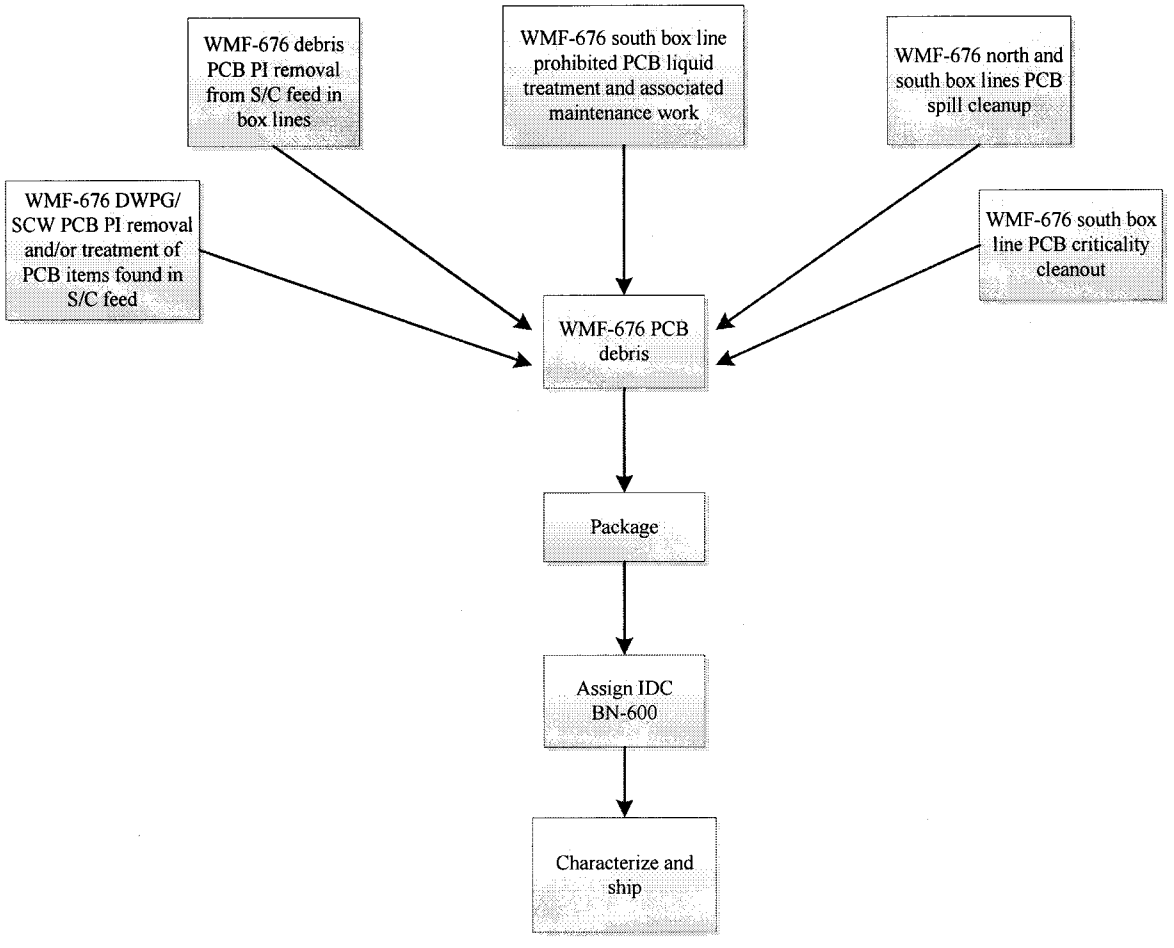

Figure 14. Waste diagram for waste within the BN-600 WIPP waste stream.

7.5.5 Material Inputs

Material inputs are identified during various activities, including, but not limited to input from VE and/or RTR and information provided by the AMWTP waste generator and the AMWTP Waste Services HWDs and PK.

7.5.6 Waste Stream Volume

Estimated volumes of WMF-676 PCB-contaminated debris generated from PI removal/treatment and from spill cleanup is incorporated into WIPP WSPFs. See AMWTP WTS for current up-to-date volumes for each IDC within this waste.[140]

7.5.7 Waste Packaging

WMF-676 PCB-contaminated debris is packaged in accordance with applicable AMWTP procedures (e.g., INST-OI-24). [25] Newly generated TRU wastes are placed in a filtered container. Absorbent may be added prior to placement of waste into the container. Waste will be bagged using a 6-mil (or thicker) bag or placed in an open head drum with a 6-mil (or thicker) polyethylene drum bag liner. A waste container may be bulk-loaded (multiple bags in one container), loaded with a single bagged item, or loaded with multiple items in a single drum bag liner. [134, 188]

7.5.8 Waste Characterization

The AMWTP general approach to characterization is described in Section 3.9.

Newly generated WMF-676 PCB-contaminated debris waste has been historically managed as mixed wastes. The AK for newly generated WMF-676 PCB-contaminated debris waste is based on related generator AK summary reports, PK, generator input, and appropriate Waste Services HWDs.[31] Waste constituents and HWNs are identified in RPT-TRUW-88 and included in RPT-TRUW-12. Waste constituents and HWNs assigned are identified in the related generator AK summary reports, and information provided by the AMWTP waste generator and the AMWTP Waste Services HWDs and PK. AK characterization is augmented by VE, RTR and NDA.[5, 134, 188]

7.5.8.1 Identification of EPA HWNs

WMF-676 PCB-contaminated debris waste has historically been managed as mixed waste. [134] The characterization results are documented in a Waste Services HWD, in RPT-TRUW-12 and in RPT-TRUW-88. [5, 31, 61, 73]

7.5.8.1.1 Ignitability

WMF-676 PCB-contaminated debris wastes do not meet the 40 CFR 261.21 definition of ignitability. The AMWTP heterogeneous PCB debris waste is not a liquid, an ignitable compressed gas, or an oxidizer. If found, liquid in excess of WIPP-WAC limits will be removed or treated by absorption prior to WIPP shipment/disposal. Containers that are identified as having prohibited liquids may be treated using SP-400®, Aquaset®, Aquaset II-G®, Petroset II®, Petroset II-G® or Micro-Cel® E absorbents to ensure that the waste is acceptable for disposal at WIPP. The wastes are not compressed gas and do not contain compressed gas. The WMF-676 PCB-contaminated debris waste does not meet the U.S. DOT definition of an oxidizer as defined in 49 CFR 173. Finally, the waste is not capable of causing fire through friction, absorption of moisture, or spontaneous chemical change. The characterization results are documented in a Waste Services HWD. The WMF-676 PCB-contaminated debris waste does not exhibit the characteristic of ignitability (D001). [5, 31, 130, 131, 132, 133, 134, 188]

7.5.8.1.2 Corrosivity

WMF-676 PCB-contaminated debris waste does not meet the 40 CFR 261.22 definition of corrosivity. WMF-676 PCB-contaminated debris waste is not liquid waste and is not expected to contain liquids in excess of WIPP-WAC limits. If found, liquid in excess of WIPP-WAC limits will be removed or treated (absorbed) prior to WIPP shipment/disposal. Containers that are identified as having prohibited liquids may be treated using SP-400®, Aquaset®, Aquaset II-G®, Petroset II®, Petroset II-G® or Micro-Cel® E absorbents to ensure that the waste is acceptable for disposal at WIPP. The characterization results are documented in a Waste Services HWD. WMF-676 PCB-contaminated debris waste does not exhibit the characteristic of corrosivity (D002). [5, 31, 130, 131, 132, 133, 134, 188]

7.5.8.1.3 Reactivity

WMF-676 PCB-contaminated debris waste does not meet the 40 CFR 261.23 definition of reactivity. WMF-676 PCB-contaminated debris waste is not a liquid waste. Any containers that are identified as having prohibited liquids may be treated using SP-400®, Aquaset®, Aquaset II-G®, Petroset II® or Petroset II-G®, or Micro-Cel® E absorbents to ensure that the waste is acceptable for disposal at WIPP. WMF-676 PCB-contaminated debris waste is stable and will not undergo violent chemical change, react violently with water, form potentially explosive mixtures with water, or generate toxic gases, vapors, or fumes when mixed with water. The waste does not contain sulfide waste which, when exposed to a pH between 2 and 12.5, can generate toxic gases, vapors, or fumes in a quantity sufficient to present a danger to human health or the environment. The waste is not capable of detonation or explosive reaction if subjected to a strong initiating source if heated under confinement. The waste is not readily capable of detonation or explosive decomposition or reaction at standard temperature and pressure. The wastes do not contain explosive material and are not forbidden explosives or Division 1.1, 1.2, or 1.3 (Class A or B) explosives as defined in 49 CFR Part 173. Although some of the waste contains wastes that are assigned F006, F007, and F009 listed HWNs and associated with cyanide electroplating operations, the waste, when exposed to a pH between 2 and 12.5, will not generate toxic gases, vapors, or fumes in a quantity sufficient to present a danger to human health or the environment. The characterization results are documented in a Waste Services HWD. WMF-676 PCB-contaminated debris waste does not exhibit the characteristic of reactivity (D003). [5, 31, 130, 131, 132, 133, 134, 188]

7.5.8.1.4 Toxicity Characteristic

The WMF-676 PCB-contaminated debris waste meets the definition of toxicity for metals and organics. [5, 134]

The characterization results are documented in a Waste Services HWD. Waste constituents and HWNs are identified in RPT-TRUW-88 and included in RPT-TRUW-12. [5, 31, 134]

7.5.8.1.5 Listed Waste

The WMF-676 PCB-contaminated debris waste meets the definition of a RCRA-listed waste. (5, 134, 188)

7.5.8.1.5.1 F- Listed HWNs

The characterization results are documented in a Waste Services HWD. Waste constituents and HWNs are identified in RPT-TRUW-88 and included in RPT-TRUW-12. (5, 31, 134)

7.5.8.1.5.2 P-, U- and K-Listed HWNs

WMF-676 PCB-contaminated debris waste is not discarded, unused, commercial chemical products, off-specification species, a manufacturing intermediate, or contains spill residues thereof that would meet the listing of P- or U- listed hazardous waste as identified in 40 CFR 261.33. In addition, the WMF-676 PCB-contaminated debris waste was not mixed with, or derived-from the treatment, storage, or disposal of P- or U-listed hazardous waste. The characterization results are documented in a Waste Services HWD. As a result, P- and U-listed HWNs are not assigned to WMF-676 PCB-contaminated debris waste. (5, 31, 134, 188)

The AMWTP does not use commercial chemicals containing beryllium powder. The WMF-676 PCB-contaminated debris waste may be contaminated with trace quantities of beryllium (e.g., less than one percent of the waste by weight). Although WMF-676 PCB-contaminated debris waste may contain beryllium contamination, the beryllium contamination is only associated with spent forms of beryllium; it is not associated with commercial chemical product, an off-specification species, a manufacturing intermediate a container residue, or a spill residue thereof. The characterization results are documented in a Waste Services HWD. Based on this information, the P015 HWN does not apply to WMF-676 PCB-contaminated debris waste. (5, 31, 134, 188)

The AMWTP does not use hydrofluoric acid at the site. Although hydrofluoric acid was identified as a chemical used (for its intended purpose) during plutonium processing at some of the generator sites, AK indicates that only spent forms of hydrofluoric acid would have contaminated WMF-676 PCB-contaminated debris waste. WMF-676 PCB-contaminated debris waste does not contain and was not derived from an unused commercial chemical product, an off-specification species thereof, or a manufacturing intermediate that would be classified as a U134 HWN. The characterization results are documented in a Waste Services HWD. Based on this information, the U134 HWN does not apply to WMF-676 PCB-contaminated debris waste. (5, 31, 134, 188)

7.5.9 Radionuclide Content

Radionuclide content of WMF-676 PCB-contaminated debris waste is described in Section 3.7. The radionuclides expected to be quantifiable or calculated by NDA technique in the TRU heterogeneous PCB debris waste are those identified in RPT-TRUW-07 for RF, MD, AE, BC, RL, SD, LA, and AW. WMF-676 PCB-contaminated debris waste is generated during

management of waste from multiple generators. The radionuclides expected in waste from each generator are identified in RPT-TRUW-07. (83)

7.5.10 Prohibited Items

WMF-676 PCB-contaminated debris waste is not expected to contain WIPP-prohibited items. AMWTP Waste Service's hazardous waste determinations, AMWTP packaging procedures, RTR and/or VE are used to support the absence of prohibited items for newly generated waste. Drums containing prohibited items will not be shipped to WIPP. (61, 73)

If found, WIPP-prohibited items associated with WMF-676 PCB-contaminated debris waste will be treated prior to shipment to WIPP or will be managed separately. Containers with WIPP-prohibited liquids may be treated using nonhazardous solidification agents (e.g., SP-400®, Aquaset®, Aquaset II-G®, Petroset II®, Petroset II-G® or Micro-Cel® E absorbents) to render the waste acceptable prior to shipment. (130, 131, 132, 133)

7.5.11 Identification of PCBs

WMF-676 PCB-contaminated debris wastes are known or suspected to be contaminated with PCBs in concentrations >50 ppm. (5, 134, 188)

7.6 AMWTP Laboratory Debris Waste

To be developed: BN-525, BN-526, BN-527, and BN-597. The PCB waste may potentially be grouped with PCB waste described in Section 7.4.

Secondary waste is generated in the laboratory from analyzing TRU waste samples. This waste includes debris waste (e.g., beakers, vials). Waste may also contain <50% by volume homogeneous solids, including absorbed/solidified laboratory extraction liquids, sample residues (leached solids remaining after extraction), and returned unused sample material. This waste is generated at the analytical laboratory located at RWMC and operated by AMWTP. Table 7.7 provides a list of IDCs included in this waste group and dates of generation for AMWTP laboratory debris.

Table 7.7. AMWTP laboratory debris waste IDCs, waste descriptions, and generation dates.

IDC	Description	Generation Date
BN-525	P/U-listed Lab Non-PCB Debris Waste	TBD
BN-526	Lab PCB Debris Waste (not P/U-listed)	TBD
BN-527	Lab Non-PCB Debris Waste (not P/U-listed)	TBD
BN-597	P/U-listed Lab PCB Debris Waste	TBD

8.0 DEFINITIONS

Acceptable knowledge (AK). Any information about the process used to generate waste, material inputs to the process, and the time period during which the waste was generated, as well as data resulting from the analysis of waste, conducted prior to or separate from the waste certification process authorized by EPA's Certification Decision, to show compliance with Condition 3 of the certification decision (Appendix A of the part). (40 CFR 194.2 and 194.67, Criteria for the Certification and Re-Certification of the Waste Isolation Pilot Plant's Compliance with the 40 CFR Part 191 Disposal Regulations).

Acceptable Knowledge Resolution (AKR) Checklist (Form-1070). The documented resolution of differences between AK documentation and characterization data. Typically, an AK Resolution addresses inconsistencies identified during confirmatory analysis and observations performed during the AMWTP characterization processes.

Alpha low-level waste (ALLW). Waste containing TRU radionuclides with total activity from 10 – 100 nanocuries per gram (nCi/g) (greater than the lower limit of detection [LLD]) and may or may not contain characteristic and/or listed waste constituents.

Low-level waste. Waste contaminated with radionuclides with total activity under 100 nCi/g.

Mixed low-level waste. Waste that contains LLW and characteristic and/or listed waste constituents.

Mixed transuranic waste. Waste contaminated with TRU radionuclides and characteristic and/or listed waste constituents.

Non-AMWTP generator. An INL waste generator, such as the Idaho Nuclear Technology and Engineering Center (INTEC) and MFC.

Offsite generator. A non-INL waste generator, such as MD, BC, RL, RF, etc.

Retrievably stored. Refers to waste that is retrieved from AMWTP TSA-RE berm area.

TRU radionuclides. Alpha-emitting radionuclides with an atomic number greater than 92 (i.e., the element uranium) with half lives greater than 20 years.

TRU waste. Waste contaminated with TRU radionuclides at an activity concentration greater than 100 nCi/g.

WIPP waste stream. Waste material generated from a single process or from an activity that is similar in material, physical form, and hazardous constituents.

9.0 REFERENCES

1. MP-TRUW-8.13, Collection, Review, and Management of Acceptable Knowledge Documentation
2. MP-TRUW-8.1, Certification Plan for INL Transuranic Waste [P396A]
3. EPA-ID No. NM4890139088-TSDF, Attachment B, Waste Analysis Plan to the Hazardous Waste Facility Permit for the Waste Isolation Pilot Plant
4. DOE/WIPP-02-3122, Transuranic Waste Acceptance Criteria for the Waste Isolation Pilot Plant [P362A]
5. RPT-TRUW-12, AMWTP Waste Stream Designations [P393A]
6. RPT-PMP-01, Rev-05, Idaho National Engineering and Environmental Laboratory Advanced Mixed Waste Treatment Project - Project Management Plan [P386A] (Suspended)
7. CCP-PO-003, CCP Authorized Methods for Payload Control (CCP-CH-TRAMPAC) [P672A]
8. 40 CFR Parts 260 through 265 and 40 CFR Parts 269 through 270, current edition
9. New Mexico Administrative Code, Title 20, Environmental Protection, Chapter 4, Hazardous Waste
10. CCP-CM-013, CCP Transportation HSG Only - Flammable Gas Analysis (FGA) [P1141S]
11. ID4890008952, AMWTP HWMA/RCRA Permit
12. RPT-ESH-062, Rev 1, Category 1 Exemption for 30% increase in the Transuranic Storage Area – Retrieval Enclosure Retrieval Rate, 10/21/09 [1971A] (Cancelled)
13. RPT-DSA-02, Documented Safety Analysis [P953A]
14. Carlsbad Area Office, Interim Guidance on Ensuring that Waste Qualifies for Disposal at the Waste Isolation Pilot Plant [P203A]
15. Nuclear Waste Policy Act of 1982 [P757A]
16. RPT-TRUW-56, Acceptable Knowledge Document for INL Stored Transuranic Waste - Rocky Flats Plant [P649A]
17. RPT-TRUW-04, Acceptable Knowledge Document for the Battelle Columbus Laboratories, Building JN-4 Plutonium Laboratory [P417A]
18. RPT-TRUW-13, Acceptable Knowledge Document for INL Stored Transuranic Waste – Mound Plant Waste [P418A]
19. CAO:NTP:MRB 97-1108 UFC 5822, Memorandum from DOE CAO to J. M. Roberson, RFFO, and J. M. Wilcynski, INEEL, Identification of Defense Waste Streams Generated at Rocky Flats Environmental Technology Site (RFETS), May 20, 1997 [C191A]

20. RPT-TRUW-82, Acceptable Knowledge Document for Hanford Debris Waste Shipped to AMWTP [P857A]
21. RPT-TRUW-79, Acceptable Knowledge Document for Materials and Fuel Complex Waste [P890A]
22. INST-OI-23, Soil Removal Operations [P389A]
23. INST-OI-11, Waste Container Handling [P1092S]
24. INST-EC&P-7.28.1, SMWTP TSA-RE Soil Sampling Procedure [P1093S]
25. INST-OI-24, Packaging Radioactive Waste [P388A]
26. INST-OI-09, Retrieval Inspection Station Operations [P1094S]
27. INST-FOI-21, Drummed Waste Handling Operations [P405A]
28. RPT-TRUW-78, AMWTP Challenging Waste Forms and Disposition [P1101A]
29. INST-OI-84, Waste Container Repair and Overpack [P1095S]
30. INST-OI-88, Spill/Leak Response and Cleanup [P1096S]
31. MP-WM&M-13.9, Waste Characterization and Waste Services Management [P392A]
32. INST-FOI-23, Special-Case Waste Operations [P403A]
33. INST-FOI-32, Size Reduction of Large Items [P1099S]
34. INST-FOI-20, Supercompactor and Post-Compaction Operation [P414A]
35. MP-EC&P-7.10, Spill Response Procedure [P404A]
36. RPT-TRUW-74, Decanted Liquid Chemical Compatibility and Hazard Evaluation [P1108A]
37. INST-FOI-16, Box-Line Operations [P415A]
38. INST-OI-68, Drum Treatment Facility Operations [P807A] (Suspended)
39. INST-FOI-25, Special-Case Waste Packet Monitor Operations [P1110A]
40. INST-FOI-17, Facility Visual Examination Operations [P433A]
41. PLN-015, Plan of Action for WMF-628 Drum Treatment Facility (Multi Function Enclosure) Readiness Assessment [P1111S]
42. FAC-SD-23, Rev. 1, 5/17/05 to 7-9-09, Special Case Waste [P1112A] (Reference Document Only – Cancelled per DCR-6595)
43. FAC-SD-25, Rev. 2, 6/12/07, Special Case Waste Packet Assay Equipment. [P1113S] (Reference Document Only – Cancelled per DCR--6597)
44. INST-FOI-15, Waste Box Shredding and Exporting Operations [P1114S]
45. MP-WM&M-13.3, 90-Day Temporary Accumulation Areas [P391A]

46. RPT-006, Using Mechanical Vibration to Enhance Liquid Availability and Treatment in Drums containing Sludge (Reference Document only) [P1115A]
47. CKA-001-09, Memorandum to File Re: Summary of Retrieval AK for Pad R, Cell 1 Waste, March 5, 2009 [C618A]
48. INST-OI-43, HGAS Sampling and Analysis Operations [P1103S] (Suspended)
49. INST-OI-80, Unpacking Overpack Containers [P1116S] (Suspended)
50. INST-OI-91, Drum Re-Overpacking Facility Operations [P1117A]
51. MP-TRUW-8.2, Quality Assurance Project Plan [P1118A]
52. INST-OI-45, Drum Filter Installation [P1104S]
53. INST-OI-50, WMF-615 Filter Insertion Operations [P1105S]
54. INST-OI-92 Drum Filter Removal and Replacement Operations [P1106A] (Suspended)
55. INST-FOI-34, Shredder Pre-Filter Replacement (AFU-750-200 or AFU-750-201 ONLY) [P1107A]
56. MP-EC&P-7.4, HEPA Filter Management Procedure [P1119S]
57. INST-MI-1070, System 234 Pre-Filter Replacement [P1120S]
58. INST-MI-1051, HVAC Pre-Filter Replacement [P1121A]
59. INST-MI-1001, Ventilation HEPA Filter Replacement [P1122A]
60. INST-MI-1082, System 235 Air Filter Replacement [P1123A]
61. INST-OI-12, Real-Time Radiography Examinations (Certification Scans) [P407A]
62. INST-OI-41, RTR Operations (Box) [P408A] (Cancelled)
63. INST-OI-81, RTR Operations (For WIPP Certification of Boxes) [P1124S] (Cancelled)
64. INST-FOI-01, In-Plant Drum Assay Operations [P1125S]
65. INST-OI-16, Drum Coring Operations [P413A] (Suspended)
66. INST-OI-73, Manual Drum Coring Operations [P1126A] (Suspended)
67. INST-OI-75, Container-In-Container Sampling [P1127A] (Suspended)
68. INST-MS-0111, Supercompactor Hydraulic Oil Change [P1128S]
69. INST-MS-0097, Removal of Maintenance Debris from the Supercompactor Glovebox [P1129S]

70. MSDS, QuintoLubric 702-46, 5/17/02, Quaker Chemical Corp. [P1130S]

71. INST-OI-14, Drum Assay Operations [P1131S]

72. INST-OI-15, Box Assay Operations [P1132S]

73. INST-OI-34, Non-Facility Visual Examination Operations [P387A]

74. MSDS-067 for QuintoLubric 822-300 [P1316S]

75. MP-RS&C-6.17, Use of Vacuum Cleaners and Portable Air Handling Equipment in Radiological Areas [P1139S]

76. RPT-TRUW-05, Waste Matrix Code Reference Manual [P399A]

77. MP-TRUW-8.5, TRU Waste Certification

78. INEL-95/0412, Waste Description Information for Transuranically-Contaminated Wastes Stored at the Idaho National Engineering Laboratory [P365A]

79. INST-MS-0049, Replace Hydraulic Fluid in Brokk® Manipulators [P1140A]

80. CCP-TP-082, CCP Waste Container Filter Vent Operations [P1142S]

81. DOE/WIPP 06-3345, WIPP Flammable Gas Analysis

82. Interview of Dave Preston, (Coring and Solid Sampling SME Lead and Drum Treatment and Repackaging SME Lead), BBWI, by Carolyn Abbott re: Clarification of AMWTP procedures [C1010A]

83. RPT-TRUW-07, Determination of Radioisotopic Content in TRU Waste Based on Acceptable Knowledge [P398A]

84. Waste Stream Profile Form INW276.003, Graphite, 7/25/2000 [P211A]

85. Waste Stream Profile Form INW276.004, Graphite, 9/26/2000 [P212A]

86. Waste Stream Profile Form INW296.001, Non-special Source Metals, 10/23/2000 [P213A]

87. Waste Stream Profile Form INW247.001, Raschig Rings, 11/13/2000 [P214A]

88. Waste Stream Profile Form INW243.001, Glass (except Raschig Rings), March 26, 2001 [P215A]

89. Waste Stream Profile Form INW211.001, Filters and Insulation, 4/26/2001 [P216A]

90. Waste Stream Profile Form INW216.001, First/Second Stage Sludge, May 24, 2001 [P217A]

91. Waste Stream Profile Form INW218.001, Building 374 Sludge, July 19, 2001 [P218A]

92. Waste Stream Profile Form INW169.001, Combustibles, 2/1/02 [P284A]

93. Waste Stream Profile Form INW198.001, Plastics, 2/1/02 [P285A]

94. Waste Stream Profile Form INW222.001, Miscellaneous Cemented Sludges, 4/10/02 [P288A]

95. MP-TRUW-8.40, INL Waste Acceptance and Transfers

96. MP-TRUW-8.41, Offsite Waste Acceptance

97. RPT-TRUW-86, Identification of Pack Dates for Waste Potentially Included in the AMWTP Inventory [P1031A]

98. MP-WM&M-13.2, Satellite Accumulation Areas [P390A]

99. MSDS, QuintoLubric 888-68, 3/26/04, Quaker Chemical Corp. [P447A]

100. OR-NFS-CH-Soil Lot 1, AMWTP Form-1900, DOE CH-TRU Waste Profile for Nuclear Fuel Services Contact-Handled Transuranic Waste Soil Stored at Oak Ridge National Laboratory (OR-250) [P772A]

101. SR-MD-HOM-A, AMWTP Form-1900, DOE CH-TRU Waste Profile for Mound Plant Solidified Acid/Caustic Waste Stored at the Savannah River Site (SR-835) [P778A]

102. AMWTP NTLBL-S5400, AMWTP Form-1900, DOE CH--TRU Waste Profile for NTLBL-S5400, Lawrence Berkeley Heterogeneous Debris (NT-211) [P796A]

103. NTLLNL-S3900, AMWTP Form-1900, DOE CH-TRU Waste Profile for NTLBL-S5400, Lawrence Berkeley Heterogeneous Debris (NT-211) [P797A]

104. NTLLNL-S5400, AMWTP Form-1900, DOE CH-TRU Waste Profile for NTLLNL-S5400, LLNL Heterogeneous Debris (NT-213) [P798A]

105. AMWTP NTRLC-S5400, AMWTP Form-1900, DOE CH-TRU Waste Profile for NTRLC-S5400, NTS Lynchburg Heterogeneous Debris (NT-214) [P799A]

106. AMWTP NTLBL-S3900, AMWTP Form-1900, DOE CH-TRU Waste Profile for NTLBL-S3900, NTS Berkeley Solidified Liquids (NT-210) [P800A]

107. AMWTP NTS-EG&G-HET, AMWTP Form-1900, DOE CH-TRU Waste Profile for NTS-EG&G-HET, NTS EG&G Heterogeneous Debris (NT-215) [P801A]

108. AMWTP NTS-TTR-HET, AMWTP Form-1900, DOE CH-TRU Waste Profile for NTS-TRR-HET, NTS Roller Coaster Debris (NT-216) [P802A]

109. AMWTP NT-RF-DECON, AMWTP Form-1900, DOE CH-TRU Waste Profile for NT-RF-DECON, NTS RF Decon Debris (NT-217) [P803A]

110. AMWTP NTLLLBL-S5400, AMWTP Form-1900, DOE CH-TRU Waste Profile for NTLLLBL-S5400, NTS Livermore and Berkeley Combined Debris (NT-218) [P804A]

111. AMWTP NTS-ITRI, AMWTP Form-1900, DOE CH-TRU Waste Profile for NTS-ITRI-S5310, NTS ITRI Debris (NT-219) [P805A]

112. AMWTP NTVERB-S5400, AMWTP Form-1900, DOE CH-TRU Waste Profile for NTVERB-S5400, NTS Decon and Maintenance Debris (NT-220) [P806A]

113. AMWTP GEVNC.02, AMWTP Form-1900, DOE CH-TRU Waste Profile for GEVNC.02, GEVNC Hot Cell 4 Debris (GV-222) [P869A]

114. AMWTP LL-W019-S3900, AMWTP Form-1900, DOE CH-TRU Waste Profile for LL-W019-S3900, Lawrence Livermore National Laboratory Solidified Inorganics and Solidified Organics (LL-212) [P870A]

115. AMWTP LL-M001-S5400, AMWTP Form-1900, DOE CH-TRU Waste Profile for LL-M001-S5400, Lawrence Livermore National Laboratory Heterogeneous Debris (LL-213) [P871A]

116. AMWTP LL-T004-S3141, AMWTP Form-1900, DOE CH-TRU Waste Profile for LL-T004-S3141, Lawrence Livermore National Laboratory Salts (LL-221) [P872A]

117. MPFPDD, AMWTP Form-1900, DOE CH-TRU Waste Profile for MPFPDD, Hanford Plutonium Finishing Plant (PFP) Heterogeneous Debris (RL-712) [P883A]

118. RLM325D.001, AMWTP Form-1900, DOE CH-TRU Waste Profile for RLM325D.001, 325 Building Heterogeneous Debris (RL-714) [P884A]

119. RLM231ZD.001, AMWTP Form-1900, DOE CH-TRU Waste Profile for RLM231ZD.001, Hanford 231-Z Building Heterogeneous Debris (RL-716) [P885A]

120. SR-W026-221F-HOM, AMWTP Form-1900, DOE CH-TRU Waste Profile for Savannah River Site, Building 221F, Absorbed Waste (SR-252) [P1134S]

121. CCP-TP-083, CCP Gas Generation Testing [P1223A]

122. RPT-TRUW-83, Acceptable Knowledge Summary for Supercompacted Debris Waste [P1030A]

123. MP-TRUW-8.25, Random Selection of Containers for Headspace Gas and solids Sampling and Analysis [P409A] (Suspended)

124. HWD 061604-01, Letter to File Re: Absorbed Supercompactor Squeezants (IDCs BN-507 and BN-514) [C953A]

125. HWD 061410-01, Letter to File Re: Supercompactor Squeezants (IDCs BN-518 and BN-632) [C1011A]

126. Material Safety Data Sheets for Acetone, Fisher Scientific, March 18, 2004. [P1294S]

127. Material Safety Data Sheets for Hexane, Fisher Scientific, September 11, 1996. [P1309S]

128. Material Safety Data Sheets for Simple Green®, Sunshine Makers Inc., May 2009. [P1298S]

129. Material Safety Data Sheets for Sunrise® Exeter, Sunrise Environmental Scientific, March 15, 2001. [P1310S]

130. Material Safety Data Sheets for Petroset II and Petroset II-G, Fluid Tech, Inc. June 8, 1998 and March14, 2006. [P657S]

131. Material Safety Data Sheets, PIG® Acid Encapsulating/Neutralizing, Absorbents, February 5, 2007; and PIG® Packing Material, Absorbents, February 1, 2007. [P866S]

132. Material Safety Data Sheets, Aquaset® (sodium montmorillonite) and Aquaset II-G® (sepiolite), Fluid Tech, January 1, 2005 and November 11, 2008 [P881S]

133. Material Safety Data Sheet, Micro-Cel® E, Celite Corporation, January 17, 2007 [P808S]

134. AMWTP Hazardous Waste Determination WMF-676 PCB Contaminated Debris (BN-600), HWD 041811-03, June 6, 2011 [C1018A]

135. INST-OI-115, Real-Time Radiography Unit Operation (WMF-634)

136. INST-FOI-39, Processing Sludge Drums in the South Box Line [P2031] (Suspended)

137. INST-FOI-38, Drum Import/Export Glovebox Operations

138. RPT-NFCS-20, Criticality Safety Evaluation for Sludge Drum Processing in South Box Line.

139. RPT-NFCS-11, Criticality Safety Evaluation Container Conveyors within AMWTF.

140. Memo to File, Estimated Number of Containers for the BN600 PCB Contaminated Debris Waste Stream – WJE-001-11. [C1016A]

141. RPT-TRUW-30, Acceptable Knowledge Summary for Supercompacted Debris Waste (BN510)

142. CCP-AK-LANL-010, Central Characterization Project Acceptable Knowledge Summary Report for Los Alamos National Laboratory, TA-21 DP West Facility. Waste Streams: LA-MHD04.001, LA-MSG04.001, CCP, May 21, 2012. [P1421A]

143. CCP-PK-RL-101, Central Characterization Project Process Knowledge Summary Report For Hanford Plutonium Finishing Plant Contact-Handled Transuranic Debris Waste, 85-Gallon Overpacked Drums, Waste Stream MPFPDD, Rev. 2, June 4, 2010 [P853A]

144. CCP-PK-RL-102, Central Characterization Project Process Knowledge Summary Report For The Hanford 325 Building Radiochemical Processing Laboratory Contact-Handled Transuranic Debris Waste, 85-Gallon Overpacked Drums, Waste Stream RLM325D.001, Rev. 2, June 4, 2010 [P854A]

145. CCP-PK-RL-103, Central Characterization Project Process Knowledge Summary Report For Hanford 231-Z building Contact Handled Transuranic Debris Waste, 85-Gallon Overpacked Drums, Waste Stream RLM231ZD.001, Rev. 2, June 4 2010 [P855A]

146. INST-FOI-22, Visual Examination of S3000 Waste in the Facility [P1836] (Suspended)

147. Email correspondence between Daniel L. Benedict and AK: Timothy E. Venneman Re: Criticality controls/evals for S3114 treatment S Box line. [C1022A]

148. Criticality Safety Evaluation for AMWTF Box Lines.

149. Correspondence from AMWTP Environmental, June 15, 2011. [C1024A]

150. RPT-ESH-079, Advanced Mixed Waste Treatment Facility Box Line PCB Management Plan. [P1827A]

151. INST-FOI-28, Cleanup and Packaging of Dust/Debris/Material from 1st Floor Cells in WMF-676

152. INST-FOI-36, BROKK Pedestal

153. INST-FOI-37, Box Line Quarterly Cleanout

154. INST-OI-100, Retrieval Enclosure Waste Drum Extraction

155. INST-OI-101, Retrieval Enclosure Waste Box Extraction

156. INST-OI-60, Real-Time Radiography Examinations (Non-Certified Scan)

157. INST-OI-99, Real-Time Radiography Unit Operation – RTR-1001

158. RPT-TRUW-89, Acceptable Knowledge Document for Argonne National Laboratory–East Waste. [P1825A]

159. INST-FOI-40, Large Item Disposal into System 352 Export Box

160. INST-OI-114, Liquid Remediation for Inorganic Sludges [P1846S] (Suspended)

161. INST-OI-65, Standard Waste Box Direct Loading. [P1850S]

162. Material Safety Data Sheets for WaterWorks SP-400® Absorbent (MSDS-1252), WaterWorks America Inc., August 23, 2012. [P1432S]

163. MP-TRUW-8.44, Virtual Standard Waste Box Planning

164. MP-TRUW-8.45, Virtual Overpack Process and Planning

165. RPT-TRUW-60, Acceptable Knowledge Document for INL Stored Waste – Bettis Atomic Power Laboratory. [P650A]

166. RPT-82, Supercompactor Liquid Treatment Capabilities, Evaluation and Conclusion. [P859S]

167. RPT-ESH-014, Chemical Compatibility Evaluation of Wastes for the Advanced Mixed Waste Treatment Project. [P406A]

168. INST-FOI-26, AMWTF Receipt, Storage, and Container Management

169. EDF-0768, Analysis of Using Supercompaction as Treatment for the Removal of Liquids and Rupture of Aerosol Cans. [P1828A]

170. MP-PRPL-22.1, Production Planning

171. LST-EC&P-03-IM, Hazardous Waste Management Act/Resource Conservation and Recovery Act Implementing Matrix

172. LST- EC&P-11, AMWTP HWMA/RCRA Permit WMF-676 Waste Management Criteria

173. LA-MIN02-V.001, AMWTP Form-1900, AMWTP Offsite Waste Stream Profile for Profile ID. No. LA-MIN02-V.001 (LA-004) [P1821A]

174. RPT-PEP-01, Project Execution Plan. [P1834A]

175. Material Safety Data Sheet for ABC® Asbestos Binding Compound ® (MSDS-1218), Fiberlock Technologies, Inc., March 10, 2009. [P1304S]

176. Material Safety Data Sheet for Clorox® Disinfecting Wipes (MSDS-779), The Clorox Company, September, 1999. [P1831S]

177. Material Safety Data Sheet for Hg Absorb (MSDS-560), Lab Safety Supply, Inc., May 18, 2001. [P1398S]

178. Material Safety Data Sheet for Soil-Sement® (MSDS-988), Midwest Industrial Supply, Inc., June 30, 2006. [P1832S]

179. EDF-0783, Deflagration Analysis of Aerosol Can Propellant in the Supercompactor Glovebox. [P1829A]

180. Correspondence from Frank Marcinowski to EM-13 (Stan Wolf, 301-903-7962), Process for TRU Waste Defense Determination, February 2005. [C329A]

181. Public Law 102-579, WIPP Land Withdrawal Act, U.S. Congress, October 1992. [P1674A]

182. DOE M 435.1, DOE Radioactive Waste Management Manual. [P1183A]

183. INST-TRUW-8.13.1, TRU Programs Site Project Office Process

184. LST-EC&P-11, AMWTP HWMA/RCRA Permit WMF-676 Waste Management Criteria

185. AMWTP TSA-Cell Open and Cell Closure Dates. [C1282S]

186. RCRA Waste Codes for NNSS HDPE Macroencapsulation Debris Profile, AMWP MLLW Program, June 7, 2013. [C1303S]

187. SPC-013-13, Bettis Debris Waste as Mixed Low-Level Waste Feedstock to the Supercompactor July 18, 2013. [C1308]

188. RPT-TRUW-88, Acceptable Knowledge Summary for AMWTP WMF-676 PCB Contaminated Debris (BN600), [P2024A]

189. RPT-TRUW-83, Acceptable Knowledge Summary for Supercompacted Debris Waste (BN510.1), Rev. 0 and Rev. 3 [P2010]

190. RPT-TRUW-83, Acceptable Knowledge Summary for Supercompactor Debris Waste (BN510.2) WSPF package. [P1995A]

191. BN510.3 Waste Stream Profile Package for Supercompactor Debris Waste. [P2002A]

192. RPT-TRUW-83, Revision 7; Acceptable Knowledge Summary for Supercompactor Debris Waste (BN510.3)(SDA debris) [P2008A]

193. RPT-TRUW-91, Acceptable Knowledge Document for Pre-1980 INL-Exhumed SDA Waste

194. RPT-TRUW-93, Acceptable Knowledge Document for Los Alamos National Laboratory Debris Waste

195. CCP-AK-INL-001, Central Characterization Program, Acceptable Knowledge Summary Report for Waste Retrieved from Designated Areas Within the Subsurface Disposal Area at the Idaho National Laboratory

AMWTP
Advanced Mixed Waste Treatment Project

RPT-TRUW-56, Rev. 6

Acceptable Knowledge Document for INL Stored Transuranic Waste–Rocky Flats Plant Waste

Advanced Mixed Waste Treatment Project

(Signature on file. See DCR-13423.)

07/02/14
Date

Advanced Mixed Waste Treatment Project

Acceptable Knowledge Document for INL Stored Transuranic Waste—Rocky Flats Plant Waste

REVISION LOG

Revision Number	Date Approved	Pages Affected	Description of Revision
0	08/03/06	All	DCR-4791. Initial issue.
1	08/14/07	All	DCR-5213. Incorporate revision log, correct footnotes in Appendix B, revise each section for clarity and consistency.
2	8/21/08	All	DCR-7429. Remove references to RPT-12 in regard to specific IDCs and add references to specific WSPFs for approved IDCs. Use RPT-TRUW-12 as reference for Hazardous Waste Constituents. Update generation dates and HWNs. Add two-digit IDCs to Table 1-1 and corresponding chapters (C267A).
3	08/19/10	All	DCR-9039. Add information about RF waste buried in Pits 11 and 12 of the RWMC SDA. Remove Appendix B, as it will become integrated into a separate AMWTP report. Add a new Appendix B. Add references to Appendix A.
4	09/13/11	All	DCR-10378. Updated acronym list. Corrected/updated information for IDCs 010, 020, 030, 040, 050, 060,.070, 080, 292, 374, 420, 421, 422, 432, 750, 760, and 960. Updated Section 2.0 requirements. Added beryllium information to Section 3.3.4.1. Updated waste material parameter information for pyrochemical salts, evaporator salts, and ash wastes. Updated Section 17.0 to identify ash heels and delete incorrect information. Added reference to Appendix A. Updated Appendix B to add IDC and correct IDC names. General editorial changes.
5	05/09/12	Various	DCR-10550. Update information and description for IDC 760. Incorporate ITG-Bluesheet-077.
6	07/02/14	Acronym list. Appendix A and B	DCR-13423. Updated acronym list. Appendix A: Update information, description and date for various references. Appendix B: Changed IDC RF-760 description to include current AK determinations.

CONTENTS

1.0 INTRODUCTION 1-1

2.0 REQUIREMENTS 2-1

3.0 TRU WASTE GENERATION AND MANAGEMENT 3-1

3.1 RF Description and Mission 3-1

3.2 TRU Waste Operations 3-3

3.3 TRU Waste Management 3-27

3.4 TRU Waste Certification 3-37

3.5 TRU Waste Inventory 3-43

4.0 REFERENCES 4-1

5.0 SOILS 5-1

5.1 Waste Generation 5-2

5.2 Waste Packaging 5-2

5.3 Waste Characterization 5-3

6.0 SALTS 6-1

6.1 Pyrochemical Salts 6-1

6.2 Evaporator Salts 6-7

7.0 RESINS 7-1

7.1 Waste Generation 7-2

7.2 Waste Packaging 7-4

7.3 Waste Characterization 7-5

8.0 LAUNDRY, TANK CLEAN OUT, AND SEWER SLUDGE 8-1

8.1 Waste Generation 8-2

8.2 Waste Packaging 8-2

8.3 Waste Characterization 8-4

9.0 COMBUSTIBLES AND PLASTICS 9-1
9.1 Waste Generation 9-4
9.2 Waste Packaging 9-4
9.3 Waste Characterization 9-6
10.0 FILTERS AND INSULATION 10-1
10.1 Waste Generation 10-4
10.2 Waste Packaging 10-5
10.3 Waste Characterization 10-7
11.0 GLASS 11-1
11.1 Waste Generation 11-2
11.2 Waste Packaging 11-3
11.3 Waste Characterization 11-4
12.0 GRAPHITE 12-1
12.1 Waste Generation 12-3
12.2 Waste Packaging 12-4
12.3 Waste Characterization 12-5
13.0 MISCELLANEOUS HEELS 13-1
13.1 Waste Generation 13-2
13.2 Waste Packaging 13-2
13.3 Waste Characterization 13-4
14.0 FIRE BRICK DEBRIS 14-1
14.1 Waste Generation 14-2
14.2 Waste Packaging 14-3
14.3 Waste Characterization 14-4

15.0 LEADED RUBBER DEBRIS WASTE 15-1
15.1 Waste Generation 15-2
15.2 Waste Packaging 15-3
15.3 Waste Characterization 15-4
16.0 NON-SPECIAL SOURCE METAL 16-1
16.1 Waste Generation 16-3
16.2 Waste Packaging 16-6
16.3 Waste Characterization 16-7
17.0 MISCELLANEOUS INCINERATOR ASH, ASH HEELS AND SOOT 17-1
17.1 Waste Generation 17-2
17.2 Waste Packaging 17-4
17.3 Waste Characterization 17-6
18.0 MISCELLANEOUS HOMOGENEOUS SOLID WASTE 18-1
18.1 Waste Generation 18-4
18.2 Waste Packaging 18-6
18.3 Waste Characterization 18-9
19.0 RASCHIG RINGS 19-1
19.1 Waste Generation 19-2
19.2 Waste Packaging 19-3
19.3 Waste Characterization 19-5
20.0 SOLIDIFIED AQUEOUS WASTE—BUILDING 374 20-1
20.1 Waste Generation 20-2
20.2 Waste Packaging 20-7
20.3 Waste Characterization 20-8

21.0 SOLIDIFIED AQUEOUS WASTE—BUILDING 774 21-1
21.1 Waste Generation 21-3
21.2 Waste Packaging 21-7
21.3 Waste Characterization 21-9
22.0 SOLIDIFIED LABORATORY WASTE 22-1
22.1 Waste Generation 22-2
22.2 Waste Packaging 22-5
22.3 Waste Characterization 22-6
23.0 MISCELLANEOUS DEBRIS 23-1
23.1 Waste Generation 23-7
23.2 Waste Packaging 23-8
23.3 Waste Characterization 23-12
24.0 SOLIDIFIED ORGANIC HOMOGENEOUS SOLIDS 24-1
24.1 Waste Generation 24-3
24.2 Waste Packaging 24-7
24.3 Waste Characterization 24-9
25.0 ABSORBENTS 25-1
25.1 Waste Generation 25-2
25.2 Waste Packaging 25-2
25.3 Waste Characterization 25-3
26.0 GRIT 26-1
26.1 Waste Generation 26-1
26.2 Waste Packaging 26-2
26.3 Waste Characterization 26-3

27.0 AMERICIUM PROCESS DEBRIS 27-1
27.1 Waste Generation 27-2
27.2 Waste Packaging 27-2
27.3 Waste Characterization 27-3
28.0 DEPLETED URANIUM OXIDE 28-1
28.1 Waste Generation 28-2
28.2 Waste Packaging 28-2
28.3 Waste Characterization 28-2

FIGURES

Figure 3-1. Rocky Flats Plant. 3-2
Figure 3-2. Plutonium production, recovery, and purification flow diagram. 3-7
Figure 3-3. Plutonium recovery incineration process. 3-17
Figure 3-4. Fluidized-bed incineration process. 3-19
Figure 13-1. Residue dissolution process. 13-3
Figure 20-1. Building 374 radioactive decontamination and evaporation processes. 20-4
Figure 20-2. Building 374 acid neutralization and sludge immobilization processes. 20-5
Figure 21-1. Building 774 aqueous waste treatment process. 21-4
Figure 23-1. Reduction and button break-out process. 23-9
Figure 23-2. Carbon analysis process. 23-10
Figure 24-1. Flow of organic liquid waste into IDC 003 drum. 24-5
Figure 24-2. Flow of organic liquid waste into IDCs 700 and 801 drums. 24-6

TABLES

Table 1-1. Waste groups discussed in Sections 5.0 through 28.0. 1-3
Table 3-1. Nominal compositions of radionuclide mixtures at RF 3-4
Table 3-2. Plutonium operations in RF buildings. 3-5
Table 3-3. Reagents and solvents used by laboratory operations at RF. 3-13
Table 3-4. Radioisotopes used for research and analytical activities at RF 3-15
Table 3-5. Description of candidate wastes immobilized with cement. 3-20
Table 3-6. Summary of research and development activities and special order work. 3-22
Table 3-7. Drum gasket types. 3-29
Table 3-8. Drum packaging materials. 3-29
Table 3-9. Summary of TRU waste certification and characterization programs. 3-41
Table 5-1. Soil waste in the AMWTP inventory. 5-1
Table 5-2. Potential waste material parameters for dirt waste containers. 5-1
Table 5-3. Potential hazardous chemical constituents of soil wastes. 5-3
Table 6-1. Pyrochemical salt waste in the AMWTP inventory. 6-1
Table 6-2. Potential waste material parameters for pyrochemical salt waste containers 6-2
Table 6-3. Potential hazardous chemical constituents of pyrochemical salt wastes. 6-5
Table 6-4. Evaporator salt waste in the AMWTP inventory. 6-7
Table 6-5. Potential waste material parameters for evaporator salt waste containers. 6-7
Table 6-6. Potential hazardous chemical constituents of evaporator salt wastes. 6-9
Table 7-1. Resin waste in the AMWTP inventory 7-1
Table 7-2. Potential waste material parameters for resin waste containers. 7-2
Table 7-3. Potential hazardous chemical constituents of resin waste. 7-5
Table 8-1. Laundry, tank clean out, and sewer sludge waste in the AMWTP inventory. 8-1
Table 8-2. Potential waste material parameters for laundry, tank clean out, and sewer sludge waste containers. 8-2
Table 8-3. Potential hazardous chemical constituents of laundry, tank clean out, and pond sludge waste. 8-5
Table 9-1. Combustibles and plastic waste in the AMWTP inventory 9-1
Table 9-2. Typical waste material parameters for combustibles and plastic waste containers 9-3
Table 9-3. Potential hazardous chemical constituents of combustibles and plastic waste. 9-6

Table 10-1. Filters and insulation waste in the AMWTP inventory. 10-1
Table 10-2. Typical waste material parameters for filters and insulation waste containers. 10-3
Table 10-3. Potential hazardous chemical constituents of filters and insulation waste 10-8
Table 11-1. Glass waste in the AMWTP inventory. 11-1
Table 11-2. Typical waste material parameters for glass waste containers. 11-2
Table 11-3. Potential hazardous chemical constituents of glass waste 11-4
Table 12-1. Graphite waste in the AMWTP inventory. 12-1
Table 12-2. Typical waste material parameters for graphite waste containers. 12-3
Table 12-3. Potential hazardous chemical constituents of graphite waste 12-6
Table 12-4. Waste matrix evaluation. 12-6
Table 13-1. Miscellaneous heels waste in the AMWTP inventory. 13-1
Table 13-2. Potential waste material parameters for miscellaneous heels waste containers. 13-1
Table 13-3. Potential hazardous chemical constituents of miscellaneous heels waste. 13-4
Table 14-1. Fire brick debris waste in the AMWTP inventory. 14-1
Table 14-2. Typical waste material parameters for fire brick debris waste containers. 14-2
Table 14-3. Potential hazardous chemical constituents of fire brick debris waste. 14-4
Table 15-1. Leaded rubber debris waste in the AMWTP inventory 15-1
Table 15-2. Typical waste material parameters for leaded rubber debris waste containers. 15-2
Table 15-3. Potential hazardous chemical constituents of leaded rubber debris waste. 15-4
Table 16-1. Non-special source metal waste in the AMWTP inventory. 16-1
Table 16-2. Typical waste material parameters for non-special source metal waste containers. 16-3
Table 16-3. Potential hazardous chemical constituents of non-special source metal waste. 16-7
Table 17-1. Miscellaneous incinerator ash, ash heels, and soot waste in the AMWTP inventory. 17-1
Table 17-2. Potential waste material parameters for incinerator ash, ash heels and soot waste containers.(P399A) 17-2
Table 17-3. Potential hazardous chemical constituents of miscellaneous incinerator ash and soot waste 17-6
Table 18-1. Miscellaneous homogeneous solid waste in the AMWTP inventory.[a] 18-1
Table 18-2. Candidate inorganic particulate wastes immobilized with cement and reassigned IDC 806.(D059A) 18-3

Table 18-3. Typical waste material parameters for cemented sludge waste containers.(P226A, P286A, P402A) 18-4

Table 18-4. Potential hazardous chemical constituents of miscellaneous homogeneous solid waste 18-10

Table 19-1. Raschig ring waste in the AMWTP inventory. 19-1

Table 19-2. Typical waste material parameters for unleached and leached Raschig rings waste containers. 19-2

Table 19-3. Potential hazardous chemical constituents of Raschig rings waste. 19-5

Table 20-1. Building 374 solidified aqueous waste in the AMWTP inventory 20-1

Table 20-2. Typical waste material parameters for solidified aqueous waste containers.(P368A) 20-2

Table 20-3. Waste streams treated in the sludge solidification process. 20-6

Table 20-4. Potential hazardous chemical constituents of Building 374 solidified aqueous waste.(P420A) 20-8

Table 21-1. Building 774 solidified aqueous waste in the AMWTP inventory 21-1

Table 21-2. Typical waste material parameters for solidified aqueous waste containers 21-3

Table 21-3. Waste streams feeding second stage treatment. 21-6

Table 21-4. Potential hazardous chemical constituents of Building 774 solidified aqueous waste. 21-9

Table 22-1. Solidified laboratory waste in the AMWTP inventory 22-1

Table 22-2. Potential waste material parameters for solidified laboratory waste containers. 22-2

Table 22-3. Liquid wastes included in IDCs 004 and 802 22-3

Table 22-4. Potential hazardous chemical constituents of solidified laboratory waste. 22-6

Table 23-1. Miscellaneous RF debris waste in the AMWTP inventory. 23-2

Table 23-2. Potential waste material parameters for the miscellaneous debris waste containers. 23-5

Table 23-3. Potential hazardous chemical constituents of miscellaneous debris wastes 23-13

Table 24-1. Organic homogeneous solids wastes in the AMWTP inventory 24-1

Table 24-2. Typical Waste Material Parameters for the Solidified Organic Homogeneous Solid waste containers.(U099A) 24-2

Table 24-3. Organic liquid wastes included in IDCs 003, 700, and 801. 24-8

Table 24-4. Potential hazardous chemical constituents of solidified organic homogeneous solids waste. 24-9

Table 25-1. Absorbents waste in the AMWTP inventory 25-1
Table 25-2. Potential waste material parameters for absorbents waste containers. 25-1
Table 25-3. Potential hazardous chemical constituents of absorbents waste 25-3
Table 26-1. Grit waste in the AMWTP inventory. 26-1
Table 26-2. Potential waste material parameters for grit waste containers. 26-1
Table 26-3. Potential hazardous chemical constituents of grit waste. 26-3
Table 27-1. Americium process debris waste in the AMWTP inventory. 27-1
Table 27-2. Potential waste material parameters for americium process debris waste containers. 27-1
Table 27-3. Potential hazardous chemical constituents of americium process debris waste. 27-3
Table 28-1. Depleted uranium oxide waste in the AMWTP inventory. 28-1
Table 28-2. Potential waste material parameters for depleted uranium oxide waste containers. 28-1

ACRONYMS

AEC	U.S. Atomic Energy Commission (a predecessor of DOE)
AK	acceptable knowledge
AMWTP	Advanced Mixed Waste Treatment Project
ANL-W	Argonne National Laboratory-West
BNFL	British Nuclear Fuels, Limited
BWR	Backlog Waste Reassessment
CBFO	Carlsbad Field Office
CC	cargo container
CFR	Code of Federal Regulations
CH	contact-handled
CWS	Chemical Warfare Service
D&D	decontamination and decommissioning
DCHP	dicesium hexachloroplutonate
DCP	direct cementation process
DOD	U.S. Department of Defense
DOE	U.S. Department of Energy
DOR	direct oxide reduction
DOT	U.S. Department of Transportation
DU	depleted uranium
ECL	Environmental Chemistry Laboratory
EDF	Engineering Design File
EDL	economic discard limit
EDMS	Electronic Document Management System
EDTA	ethlyenediaminetetraacetic acid
EPA	Environmental Protection Agency
EU	enriched uranium
EWR	Early Waste Retrieval
FBI	Fluidized-Bed Incinerator
FRP	fiberglass-reinforced plywood (a.k.a. fiberglass reinforced polyester)
FY	fiscal year
GGT	gas generation testing
HEPA	high-efficiency particulate air
HSA	high-specific activity
HGAS	headspace gas sampling
HVAC	heating, ventilation, and air conditioning
HWD	hazardous waste determination
HWMA	Hazardous Waste Management Act
HWNs	hazardous waste numbers

IDC	item description code
IDR	Initial Drum Retrieval
INEEL	Idaho National Engineering and Environmental Laboratory
INL	Idaho National Laboratory
LASL	Los Alamos Scientific Laboratory
LLNL	Lawrence Livermore National Laboratory
LLW	low-level waste
LRL	Lawrence Radiation Laboratory
LSA	low-specific activity
MBA	material balance area
MLLW	mixed low-level waste
MSE	molten salt extraction nu
MP	Management Procedure
NGS	nuclear-generating station
NDA	non-destructive assay
OASIS	Organic and Sludge Immobilization System
ORNL	Oak Ridge National Laboratory
QAPjP	Quality Assurance Project Plan
QAPP	Quality Assurance Program Plan
PAN	passive/active neutron
PCBs	polychlorinated biphenyls
PI	prohibited item
PVC	polyvinyl chloride
R&D	research and development
RCRA	Resource Conservation and Recovery Act
RF	IDC generator designator for Rocky Flats Plant
RF	Rocky Flats Plant
RH	remote handled
RO	roaster oxide
RTR	Real-time Radiography
RWMC	Radioactive Waste Management Complex
SDA	Subsurface Disposal Area
SGRS	SWEPP Gamma-ray System
SGS	segmented gamma scan
SRV	Size Reduction Vault
SS&C	sand, slag, and crucible
SWB	standard waste box
SWEPP	Stored Waste Examination Pilot Plant
TRIPS	Transuranic Reporting, Inventory, and Processing System
TRU	transuranic

TRUPACT	Transuranic Package Transporter
TSA	Transuranic Storage Area
TSA-RE	Transuranic Storage Area - Retrieval Enclosure
TSCA	Toxic Substance Control Act
TSDF	treatment, storage, and disposal facility
TWCP	TRU Waste Characterization Program
TWMIS	Transuranic Waste Management Information System
VE	visual examination
WAC	Waste Acceptance Criteria
WAGS	Waste Assay Gamma System
WAP	Waste Analysis Plan
WETP	WIPP Experimental Test Program
WG Pu	weapons-grade plutonium
WILD	Waste Information and Location Database
WIPP	Waste Isolation Pilot Plant
WM	waste management
WMC	waste matrix code
WMP	waste material parameter
WS	waste stream
WSIC	Waste Stream Identification and Characterization
WSPF	Waste Stream Profile Form
WSRIC	Waste Stream Residue Identification and Characterization
WTS	Waste Tracking System
WWCP	WIPP Waste Characterization Program

EXECUTIVE SUMMARY

This document and its supporting documentation provides a consistent, defensible, and auditable record of acceptable knowledge (AK) for waste generated at the Rocky Flats Plant (RF) that was sent to the Idaho National Laboratory (INL) for storage. The wastes addressed by this document include containers currently in the INL accessible and retrievable inventory and those containers characterized and sent for disposal at the Waste Isolation Pilot Plant (WIPP) facility during the 3,100 m^3 Project. The inventory consists of drums and boxes of transuranic (TRU) waste generated at the RF from 1971 through 1988. The inventory also includes 46 boxes that were packaged at the RF in 1989, as well as more than 19,000 drums that were retrieved from Pits 11 and 12 containing waste packaged at the RF prior to 1972 or that were placed into the retrievable storage (i.e., Cells 1 and 2 on Pad 1) prior to maintaining inventory lists in 1971.(P443A, U127A) The wastes consist of a wide variety of matrices generated during plutonium parts production and support operations including recovery, waste treatment, maintenance, laboratory, and research and development (R&D). The inventory also contains TRU wastes generated by non-routine events including renovations, spills, fires, and decommissioning.

The Resource Conservation and Recovery Act (RCRA) and New Mexico Hazardous Waste Management Regulations authorize waste generators and treatment, storage, and disposal facilities (TSDFs) to use AK in appropriate circumstances to make hazardous waste determinations (HWDs). Knowledge of the materials and processes that generated a waste was used for characterization of TRU wastes when adequate documentation relating to the generating processes and composition of the wastes were available. For example, wastes contaminated with one or more spent solvents were characterized as listed hazardous waste if the compound(s) had been used for their solvent properties in the processes that generated the waste.

Acceptable knowledge includes information relating to plant history, process operations, and waste management, in addition to waste-specific data generated prior to the effective date of the RCRA regulations. Acceptable knowledge, as an alternative to sampling and analysis, can be used to meet all or part of the waste characterization requirements under RCRA.

In addition to published documents describing the inventory and historical operations, AK documentation was collected from numerous other sources including the RF library, historical document archives, operator historical records, and interviews with cognizant personnel. This document also references characterization data generated during the 3,100 m^3 Project and the results of data collection and sampling and analyses conducted at INL prior to the Advanced Mixed Waste Treatment Project (AMWTP) in compliance with the WIPP Waste Acceptance Criteria (WAC) and Waste Analysis Plan (WAP). This information is included in other AMWTP baseline and waste management documents. Once AK information was identified and obtained, the documentation was incorporated into source files. Over 680 sources of information were obtained, reviewed, and incorporated into a data management system. The information presented is traceable to the source by the alpha-numeric references in the text of this document. The references are divided into the following three general types of source documents: published documents (P), unpublished data (U), correspondence (C), and discrepancy reports (D).

The source documents are located in the Electronic Document Management System (EDMS) and are part of the AK record. Supplemental information is also collected, reviewed, and accounted for in the AK record. All references used are listed in Appendix A, Acceptable Knowledge Inventory, of this report.

This report consolidates the various wastes shipped to the INL from RF into waste groups. The waste groups are consolidated based on similar processes and/or similar physical and chemical properties.

This document was organized to provide the reader a comprehensive presentation of the TRU waste inventory ranging from descriptions of the historical plant operations that generated and managed the waste to specific information about the composition of each waste group. The requirements that dictated and directed TRU waste characterization and authorized the use of the AK approach are listed in Section 2.0. The historical operations, waste management, characterization, certification activities associated with the inventory, as well as the TRU waste inventory are summarized in Section 3.0. Sections 5.0 through 28.0 contain descriptions of the individual waste groups in the inventory including waste generation, waste packaging, and waste characterization. The source references and AK documents reviewed during this program are listed in Appendix A.

Appendix B, Summary of AMWTP Inventory, is a summary of the total AMWTP inventory for RF waste including the number of containers (boxes and drums) by item description code (IDC) and storage location (e.g., storage module or Transuranic Storage Area-Retrieval Enclosure [TSA-RE]), and the description of the waste. All three-digit IDCs noted in this document will also carry the AMWTP assigned generator two-digit alpha acronym RF (e.g., RF-001) when used in the Waste Tracking System (WTS), and other AMWTP reports and procedures. The information in this baseline document is intended to provide waste management (WM) and waste stream (WS) elements required by WIPP for RF waste used to compile waste stream profile forms (WSPFs) and AK waste stream summary sheets for each waste stream. As such, it includes information from previously WIPP-approved waste streams (e.g., 3,100 m^3 Project) as well as baseline information that can be used to support the characterization of the RF wastes for disposal at the WIPP facility.

1.0 INTRODUCTION

The purpose of this document and supporting documentation is to present the available AK for RF waste stored in the AMWTP retrievable and accessible storage at the INL. This inventory contains drums and boxes of TRU waste shipped by RF to the INL from 1971 through 1988, as well as boxes shipped in 1989, and drums retrieved from Pits 11 and 12 that were generated prior to 1972.(P443A, U127A) The primary objective of this document is to provide a consistent, defensible, and auditable record of the AK for this TRU waste that was available at the beginning of the AMWTP. The AMWTP retrievable and accessible storage RF waste inventory is presented in Appendix B of this report.

The New Mexico Hazardous Waste Management regulations and the WIPP RCRA permit authorize waste generators and TSDFs to use AK in appropriate circumstances to make HWDs. Acceptable knowledge includes information relating to plant history, process operations, and waste management, in addition to waste-specific data generated prior to the effective date of the RCRA regulations. Acceptable knowledge, as an alternative to sampling and analysis, can be used to meet all or part of the WIPP waste characterization requirements under RCRA.(P131A, P132A, P134A, P136A, P137A)

Since TRU waste presents serious health and safety risks to waste characterization personnel, excessive handling and manipulation of the waste is to be minimized. In addition, TRU waste generated by the U.S. Department of Energy (DOE) facilities consists of debris and other complex matrix materials that are difficult to sample. The collection of representative samples of TRU waste is costly and increases the potential of human exposure to radiation and, under most circumstances, is not feasible. TRU waste may be characterized using AK in conjunction with radioassay, real-time radiography (RTR), visual examination (VE), headspace gas sampling (HGAS) analysis and solid sampling analysis in accordance with WIPP permit requirements. This characterization process limits exposure to personnel and the environment.(P131A)

Data collected from a variety of sources relating to historical RF operations, waste generating processes, and waste management practices are presented in this document. In addition, the available information used to determine the physical, chemical, and radiological composition of the TRU waste inventory and data generated during characterization activities for the 3,100 m^3 Project at the INL have been incorporated. The information contained within this report also incorporates and revises previously identified information from INEL-96/0280, Acceptable Knowledge Document for INEEL Stored Transuranic Waste–Rocky Flats Plant Waste, Revision 3.(P368A) The information on waste is divided into waste groups that consist of populations of drums with similar sources and waste matrices. The AK record consists of RF and INL information from the following sources:

- **Published Documentation.** In general, published documents represent the most reliable, reviewed, and controlled sources of information. This documentation consists primarily of controlled documents, previously controlled documents, and procedures, in addition to formal reports, studies, and databases. Published sources are identified by the "P" at the beginning of the reference number (e.g., P368A).

- **Unpublished Data.** Unpublished data consist of information from a variety of sources that has typically not received peer review and may not have been formally controlled. In many cases, this information will consist of the raw data used during the development of published documentation. Unpublished data include, but are not limited to, draft documents, analytical data packages, log books, and inventory lists, in addition to internal reports, studies, and databases. Unpublished sources are identified by the "U" at the beginning of the reference number (e.g., U127A).
- **Correspondence.** Correspondence consists of communication records relating to specific TRU waste streams or TRU waste management. Typically, this information consists of uncontrolled records of internal and external communications. Correspondence includes, but is not limited to, internal and external letters, memos, directives, telecommunication records, meeting minutes, and personnel interview summaries. Correspondence sources are identified by the "C" at the beginning of the reference number (e.g., C002A).
- **Discrepancy Reports.** Discrepancy reports consist of resolutions of discrepancies identified between two or more AK documents. Typically, these records are letters to file written by AK experts that identify the specific discrepancy, describe the results of reevaluation of AK, and the rationale used in the resolution of the discrepancy to be used in characterization and/or identification of wastes. Discrepancy reports are identified by the "D" at the beginning of the reference number (e.g., D009A).

Most documents can be used to address one or more of the mandatory programmatic or waste stream information elements (WM and WS elements) and are assigned an "A" suffix with the reference number. Documents that are not sufficient to all parts of the WM or WS elements, but do provide supporting information for one or more of the elements, are referred to as supporting AK information.

Over 680 sources were collected and reviewed during the development of this document. The sources were incorporated into an inventory that is controlled as an AK record and is shown in Appendix A.[U094A] When possible, discrepancies between sources were resolved by contacting cognizant personnel or collecting additional information. If the inconsistency was irresolvable, the most conservative information was incorporated into the document. Discrepancy reports were generated and referenced either directly in this document or in waste stream summary reports.

This document is organized to provide the reader a comprehensive presentation of the TRU waste inventory ranging from descriptions of the historical plant operations that generated and managed the waste to specific information about the composition of each waste group. Section 1.0 is the introduction, including a discussion of the purpose and scope. The requirements used to dictate and direct TRU waste characterization and authorize the use of an AK approach are listed in Section 2.0. Section 3.0 provides historical background of the RF site, the defense determination discussion, descriptions of the RF processes, TRU waste management and certification, and the container inventory stored at the AMWTP. Section 4.0 is a brief discussion of the AK source document inventory presented in Appendix A. The groups of waste generated from the same or similar processes and/or having similar physical and chemical properties are presented in Sections 5.0 through 28.0. The IDCs for each waste group discussed in Sections 5.0 through 28.0 are presented in Table 1-1.

Table 1-1. Waste groups discussed in Sections 5.0 through 28.0.

Section	Section Title	IDC	IDC Title
5.0	Soils	090	Dirt
		697[a]	Dirt
		990	Dirt
6.0	Salts		
	6.1 Pyrochemical Salts	409	Molten Salt – 30% Unpulverized
		410	Molten Salt – 30% Pulverized
		411	Electrorefining Salt
		412	Gibson Salts
		414	Direct Oxide Reduction Salt
	6.2 Evaporator Salts	005	Evaporator Salts
		745[b]	Pits 11 and 12 Evaporator Salts
7.0	Resin	430	Ion Column Unleached Resin
		431	Leached Resin
		432	Resin, Leached and Cemented
		822	Cemented Resins
8.0	Laundry, Tank Clean Out, and Sewer Sludges	095	Sewer Sludge
		976	Building 776 Process Sludge
		978	Laundry Sludge
		995	Sewer Sludge
		749[b]	Pits 11 and 12 Sewer Sludge
9.0	Combustibles and Plastics	330	Paper and Rags-Dry
		336	Paper and Rags-Moist
		337	Plastics, Teflon, Washables, PVC
		831	Dry Combustibles
		832	Wet Combustibles
		833	Plastics, TRU Mixed
		010[c]	Paper & Rags (Pre-June 1971)
		030[c]	Plastic (Pre-June 1971)
10.0	Filters and Insulation	328	Ful-Flo Incinerator Filters
		335	Absolute 8 × 8 Filters
		338	Insulation and CWS Filter Media
		360	Insulation
		376	Cemented Insulation and Filter Media
		490	HEPA Filters and CWS Filters
		491	Plenum Prefilters

Table 1-1. (continued).

Section	Section Title	IDC	IDC Title
11.0	Glass	440	Glass
		060[c]	Glass (Pre-June 1971)
12.0	Graphite	300	Graphite Molds (Only drums with prefix 0012)
		301	Graphite Cores
		303	Scarfed Graphite Chunks
		310	Graphite Scarfings
		312	Coarse Graphite
		070[c]	Graphite (Pre-June 1971)
13.0	Miscellaneous Heels (residues)	311	Graphite Heels
		361	Insulation Heel
		393	Sand, Slag, and Crucible Heels
14.0	Fire Brick Debris	371	Fire Brick
		377	Coarse Fire Brick
15.0	Leaded Rubber Debris Waste	339	Leaded Rubber Gloves and Aprons
		463	Leaded Rubber Gloves and Aprons
		040[c]	Rubber (Pre-June 1971)
16.0	Non-Special Source Metal	320	Heavy Non-special Source Metal
		321	Lead
		480	Non-special Source Metal
		481	Leached Non-Special Source Metal
		488	Glovebox Parts w/Lead
		48A	WETP Bin Program – Metal
		050[c]	Metal Scrap (Pre-June 1971)
17.0	Miscellaneous Incinerator Ash and Soot	420	Ash, Incinerator (Virgin)
		421	Ash Heels
		422	Soot
		425	Fluid Bed Ash
18.0	Miscellaneous Homogeneous Solid Waste	290	Filter Sludge
		292	Cemented Sludge
		696	Cemented Incinerator Sludge
		806	Solidified Process Solids
		817	Cemented SS and C Heels
		818	Cemented Incinerator Ash
		820	Cemented Soot
		823	Cemented Miscellaneous Sludge

Table 1-1. (continued).

Section	Section Title	IDC	IDC Title
19.0	Raschig Rings	441	Raschig Rings, Unleached
		442	Raschig Rings, Leached
20.0	Solidified Aqueous Waste – Building 374	007	Building 374 Dry Sludge
		803	Solidified DCP Sludge
		807a	Bypass Sludge
21.0	Solidified Aqueous Waste – Building 774	001	First Stage Sludge
		741[b]	Pits 11 and 12 First Stage Sludge
		002	Second Stage Sludge
		742[b]	Pits 11 and 12 Second Stage Sludge
		800	First Stage Sludge – Cemented
22.0	Solidified Laboratory Waste	004	Special Setups
		744[b]	Pits 11 and 12 Special Setups
		802	Solidified Laboratory Waste
23.0	Miscellaneous Debris	302	Benelex and Plexiglas
		33A	WETP Bin Program – Combustibles A
		33B	WETP Bin Program – Combustibles B
		368	Magnesium Oxide Crucibles
		370	Leco Crucibles
		374	Blacktop, Concrete, and Construction Rubble
		391	Crucibles and Sand
		392	Sand, Slag, and Crucible
		416	Zinc Magnesium Alloy Metals
		44A	WETP Bin Program – Glass
		460	Washables, Rubber, Plastic
		464	Benelex and Plexiglas
		900	LSA Paper, Plastic, etc.
		950	LSA Metals, Glass, etc.
		960	Concrete, Asphalt, etc.
		970	Wood
		020[c]	Wood & Benelex (Pre-June 1971)
		080[c]	Equipment (Pre-June 1971)
		750[b]	Pits 11 and 12 Debris
		760	RFP Debris

Table 1-1. (continued).

Section	Section Title	IDC	IDC Title
24.0	Solidified Organic Homogeneous Solids	003	Organic Set Ups, Oil Solids
		743[b]	Pits 11 and 12 Organic Setups
		700	OASIS Waste
		801	Solidified Organics
25.0	Absorbents	375	Oil-Dri®
26.0	Grit	372	Grit
27.0	Americium Process Debris	241	Americium Process Residue
28.0	Depleted Uranium Oxide	751[b]	Pits 11 & 12 Roaster Oxide

a. The AMWTP has assigned IDC 697 (374A) to individual containers of IDC 374 that are greater than 50 percent by volume soil/gravel to address the database issues of two different waste matrix codes (WMCs) associated with one IDC.(P024A)

b. IDC 750 was assigned by AMWTP to identify debris waste removed from Pits 11 and 12 and placed in the TSA-RE prior to 1979. Most of this waste was not assigned an IDC by RF. RF began use of IDCs in 1971.

c. This is a two digit IDC that was used prior to June 1971 and may be assigned to containers stored in Cell 1 of Pad 1.(C267A)

CWS = Chemical Warfare Service
DCP = direct cementation process
HEPA = High-Efficiency Particulate Air (filter)
LSA = Low Specific Activity
OASIS = Organic and Sludge Immobilization System
PVC = polyvinyl chloride
SS and C = sand, slag, and crucibles
WETP = WIPP Experimental Test Program

The estimated number of containers (including drums and boxes) for each IDC included in the AMWTP inventory are compiled in Appendix B. Waste stream volume estimates are developed and included (as applicable) in the AK summary reports.

Appendix A is the Acceptable Knowledge Record Inventory of the data sources. Appendix B is the AMWTP waste inventory. The inventory is organized by IDC and waste description, and the number of containers (boxes and drums) stored in the Type II storage modules and the TSA-RE at the start of the project is listed.

2.0 REQUIREMENTS

The following is a list of requirement and guidance documents that dictate or direct collection and review of AK documents and the development of baseline AK reports, or outlines Resource Conservation and Recovery Act (RCRA)/Toxic Substances Control Act (TSCA) requirements:

- **Collection, Review, and Management of Acceptable Knowledge Documentation, MP-TRUW-8.13:** This is the AMWTP management procedure (MP) that provides an outline of the methods used by AMWTP personnel and/or subcontractors in the collection, review, compilation, evaluation, and management of AK documents. Implementation of this procedure assures that a consistent, defensible, and auditable AK record is created for the TRU waste inventory to be characterized by the AMWTP and the AMWTP newly-generated waste. This procedure includes the instructions used in the development of an AK Baseline Document based on the collected documentation. A template for the AK Baseline Document is included in Appendix H of MP-TRUW-8.13.

- **AMWTP Hazardous Waste Management Act (HWMA)/RCRA Permit:** The AMWTP Waste Acceptance Criteria (WAC) defines AMWTP requirements for receiving, storing and treating waste.

- **Certification Plan for INL Transuranic Waste, MP-TRUW-8.1:** The Certification Plan summarizes the methods and procedures used by the AMWTP to certify waste as compliant to the WAC applicable to the transportation, storage, and disposal of contact-handled (CH) and remote-handled (RH) TRU waste at the WIPP.

- **Quality Assurance Project Plan, MP-TRUW-8.2:** The Quality Assurance Project Plan (QAPjP) describes how the requirements of the WIPP WAP for TRU waste are met at the AMWTP. It identifies the quality of data necessary and the procedures developed by the AMWTP to attain and maintain quality.

- **TRU Waste Certification, MP-TRUW-8.5:** This procedure summarizes the method used by the AMWTP to certify waste as compliant with MP-TRUW-8.1, Certification Plan for INL Transuranic Waste, and CCP-PO-003, CCP Contact-Handled Transuranic Waste Authorized Methods for Payload Control (CCP CH-TRUPAC), for transportation, storage, and disposal of contact-handled transuranic (CH-TRU) waste at the WIPP.

3.0 TRU WASTE GENERATION AND MANAGEMENT

This section provides a brief history of the RF including a summary of its mission, a description of the operations associated with the generation of the TRU waste inventory stored at the INL, and the RF's TRU waste management and certification practices.

3.1 RF Description and Mission

The RF was located in northern Jefferson County, Colorado, approximately 16 miles northwest of Denver. The 6,550-acre government-owned and contractor-operated facility was part of the nationwide nuclear weapons production complex. Groundbreaking for the first permanent buildings for the plant began in 1951. By 1954, approximately 700,000 square feet of building space had been completed. As the plant operations expanded, as much as 1.6 million square feet were occupied by manufacturing, chemical processing, plutonium recovery, and waste treatment operations. Plutonium operations were located primarily in the 384-acre high security area (Protected Area). A map of the plant highlighting the buildings that generated TRU waste is provided in Figure 3-1.(P053A)

The plant had two primary missions during the period of operations from 1952 through 1990: the production of triggers for nuclear weapons and the processing of retired weapons for plutonium recovery. The triggers, also known as pits, were the first-stage fission bombs used to initiate the second-stage fusion reaction in hydrogen bombs.(P053A) Plutonium metal was recovered from retired warheads and manufacturing residues, and was also imported from the Hanford Reservation in Washington State and the Savannah River Plant in South Carolina. Weapons parts were manufactured from plutonium, uranium, beryllium, stainless steel, and various other metals.(P053A)

In general, the plant's primary mission changed little from 1952 until 1990, when plutonium operations were suspended. In the early 1960s, DOE implemented the single-mission concept to reduce redundant operations between DOE facilities. At that time, RF became the primary manufacturer for nuclear weapon triggers. With the exception of periodic refinements, only three trigger configurations were manufactured at the plant. The first two trigger designs were solid units manufactured primarily of uranium, similar to the devices used during World War II. In 1957, the trigger design was changed to sealed hollow spheres, which were manufactured with much less uranium and more plutonium. This design change resulted in lighter, smaller, and more powerful weapons.(P053A)

The general design of the trigger has not changed dramatically since 1958, although the relative amounts of metals, dimensions, and other features of the parts were modified over the years. The primary materials of construction included plutonium, uranium, beryllium, aluminum, and stainless steel. Other metals such as cadmium, vanadium, silver, and gold were also used in some of the parts. The plant also supported weapons development programs responsible for fabricating, testing, and assembling parts with new geometries or metal compositions. Because of the plant's metal manufacturing capabilities, RF often fabricated other weapons parts, including components made of stainless steel and beryllium.(P053A)

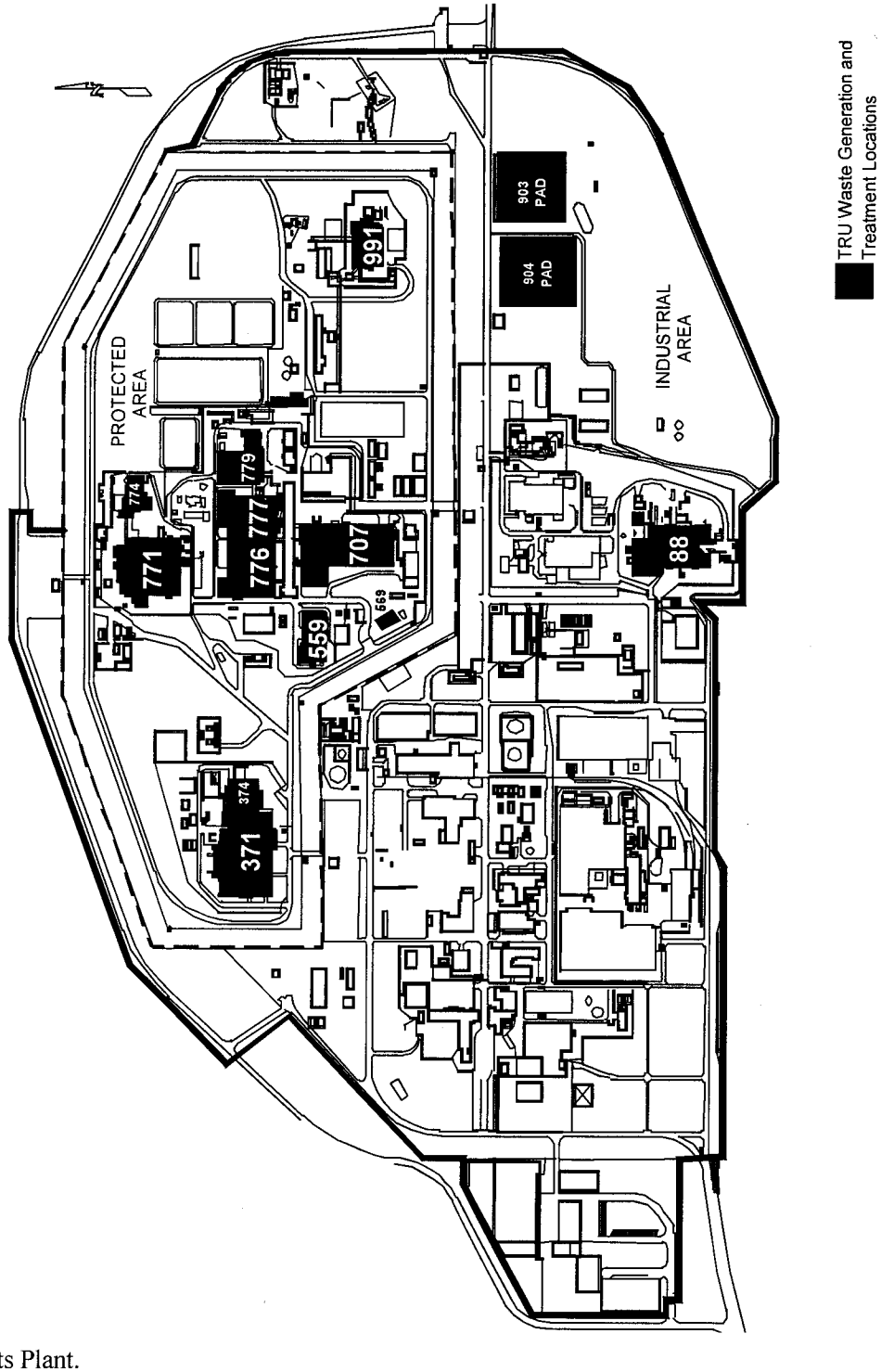

Figure 3-1. Rocky Flats Plant.

3.1.1 Defense Waste Determination

The Carlsbad Field Office (CBFO) defines defense waste as nuclear waste derived from the manufacture of nuclear weapons and operation of naval reactors. The WAC[(P362A)] defines defense waste as originating from specific defense activities, as specified in Section 10101 (3) of the Nuclear Waste Policy Act of 1982. The term "atomic energy activity" means any activity of the Secretary (of DOE) performed in whole or in part in carrying out any of the following functions:

- Naval reactors development
- Weapons activities, including defense inertial confinement fusion
- Verification and control technology
- Defense nuclear materials production
- Defense nuclear waste and materials by products management
- Defense nuclear materials security and safeguards
- Defense R&D.

Virtually all of the TRU waste generated at RF was generated through defense program weapons activities or were wastes that were inadvertently mixed with defense wastes, which cannot be separated. Furthermore, based on a review of data, there is no historical record or evidence of spent nuclear fuel or high level waste ever having been handled at RF. Based on the guidance described above, defense wastes are identified as those wastes generated during work involving only defense activities or during work in which defense and non-defense wastes were inadvertently mixed in the past and from which the non-defense portion cannot be segregated. Accordingly, TRU waste generated at RF can be clearly classified as defense-generated TRU waste and is, therefore, eligible for disposal at WIPP.[(C188A, C190A, C191A, P436A)]

3.2 TRU Waste Operations

Waste materials contaminated with TRU radionuclides were generated during the fabrication, assembly, and processing of nuclear weapons components in the DOE weapons production complex.[(P028A)] The term "transuranic" refers to the man-made actinide elements with atomic numbers greater than uranium (atomic number 92). Plutonium and americium are the primary TRU actinides encountered in DOE weapons facilities.[(P020A)] The Atomic Energy Commission (AEC) first identified TRU waste as a separate category of radioactive waste in 1970. In 1973, the AEC established 10 nanocuries per gram of alpha activity as the threshold at which waste would be defined as TRU. This definition included all radionuclides with long half-lives and all the TRU isotopes except ^{238}Pu and ^{241}Pu. The 1973 definition of TRU waste also included ^{233}U and its associated daughter products. DOE revised the definition of TRU waste in 1982 to include materials contaminated with alpha-emitting TRU radionuclides having a half-life greater than 20 years, in concentrations of more than 100 nanocuries per gram.[(P020A, P028A, U120A)] The revised definition also excluded all uranium isotopes.

Due to the 1973 change in the definition of TRU wastes and the time of receipt of TRU waste at the INL, the INL inventory contains waste that is now considered low-level by the current DOE standard.(P020A)

It has been estimated that approximately 95 percent of the radioactive waste volume generated at RF was a result of processing plutonium. A majority of the remaining 5 percent was generated during the processing of depleted uranium (DU).

The primary radionuclides contained in RF TRU waste were weapons-grade plutonium (WG Pu), ^{241}Am, and enriched uranium (EU). In addition, wastes generated by liquid waste treatment operations contained DU, as discussed in Section 3.2.5. The nominal isotopic compositions of WG Pu, EU, and DU in weight percent are listed in Table 3-1.(C039A, C130A, P152A, P161A, P166A, P169A, P210A, P227A, U064A)

Table 3-1. Nominal compositions of radionuclide mixtures at RF.

Weapons-Grade Plutonium		Enriched Uranium		Depleted Uranium	
^{238}Pu	0.01–0.05%	^{231}Th	negligible	^{231}Th	negligible
^{239}Pu	92.8–94.4%	^{234}Th	negligible	^{234}Th	negligible
^{240}Pu	4.85–6.5%	^{234}U	~1.0%	^{234}U	~0.0006%
^{241}Pu[a]	0.3–1.0%	^{235}U	~90–93%	^{235}U	~0.2
^{242}Pu	0.005–0.60%	^{236}U	~0.4%	^{238}U	~99.8%
		^{238}U	~5.3%		

a. Includes ^{241}Am daughter product.

TRU wastes generated at RF were primarily associated with operations that manufactured, recovered, and treated plutonium-metal and plutonium-containing materials. In addition, TRU waste was generated during activities that supported plutonium production, including maintenance, laboratory, and R&D operations. Non-routine events, including renovations, spills, fires, and decommissioning also generated TRU waste. Plutonium-related operations conducted in Buildings 371, 374, 559, 707, 771, 774, 776, 777, and 779 generated the vast majority of the TRU waste at the plant. Table 3-2 briefly summarizes the operations of these buildings associated with the TRU waste inventory.(P060A–P062A, P070A, P077A–P079A, P081A, P082A) Process flow diagrams for waste generating processes are provided in archived Waste Stream and Residue Identification and Characterization (WSRIC) information.(P060A–P062A, P070A, P077A–P079A, P081A, P082A) Relevant details for particular waste streams are provided in the applicable chapters in the WSRIC.

In addition to the waste generated by plutonium operations, a small amount of TRU waste may have been generated by special order work in Building 881. The non-routine operations involved the machining of ^{233}U in an area normally used for ^{235}U. Some plutonium-contaminated waste may have also been generated during the leaching of uranium and beryllium site-return parts in Building 881. These parts were sprayed with nitric acid to remove surface plutonium contamination. The uranium and beryllium leaching process was moved to Building 771 between 1973 and 1975.(C072A, C110A, U057A) Although the revised 1980 TRU waste definition excludes uranium isotopes as TRU wastes, for purposes of this baseline document, materials shipped to INL that are contaminated with ^{233}U are managed as TRU waste.

Table 3-2. Plutonium operations in RF buildings.

Building	Operations	Primary Functions
371	Recovery	Electrorefining of non-specification plutonium metal[P067A]
	Waste Treatment	Stabilization of incinerator sludge, heels (sand, slag, and crucibles), and resins[P067A]
	Storage	Automated materials handling system[P067A]
	Laboratory	Analytical and chemical standards laboratory[P053A]
374	Waste Treatment	Aqueous waste treatment, sludge stabilization, and salt immobilization[P053A]
559	Laboratory	Plutonium analytical laboratory conducting spectrochemical, chemical, and mass spectrometric analyses[P053A]
707	Production	Plutonium foundry and casting[P053A]
		Part rolling, cutting, forming, and machining[P053A]
		Part assembly[P053A]
		Part calibration, weighing, leak testing, and measurement[P053A]
771	Recovery	Recovery of plutonium from solid wastes, liquids, and plutonium oxide using dissolution, incineration, leaching, and ion exchange technology[P061A]
	Laboratory	Radiochemistry, chemical standards, reagent preparation, and R&D support[P061A, P067A]
	R&D	Plutonium metallurgy supporting production operations[P053A]
		Chemical technology supporting actinide recovery, separation, and purification[P053A]
774	Waste Treatment	Aqueous and organic liquid waste treatment and sludge stabilization[P077A]
776	Recovery	Pyrochemical processing to extract, purify, and recover plutonium and americium using molten salt extraction (MSE), direct oxide reduction (DOR), pyroredox, and electrorefining technology[P078A]
		Processing of pyrochemical salt to recover plutonium[P078A]
	R&D	Development of coating technologies and pilot plant Fluidized-Bed Incinerator (FBI)[P067A]
	Waste Treatment	FBI for liquid and solid low-level waste (LLW)[P067A]
777	Production	Back-up and special assembly of parts using welding and joining technologies[P053A]
		Disassembly, cleaning, and briquetting of site-return parts and metal for further processing[P053A]
		Part machining, coating, and etching[P067A]
		Dimensional, weight, radioscopy, density, stress, and pressure testing of parts for production control[P053A, P067A]

Table 3-2. (continued).

Building	Operations	Primary Functions
	R&D	Fabrication of classified parts and fitting specialty parts and materials[P053A]
	Laboratory	Plutonium metallurgy and tritium analysis[P067A]
779	R&D	Development and refinement of production, recovery, purification, and waste treatment technologies[P053A]
	Recovery	Leaching of parts to remove and recover surface contaminants[P053A, P062A, P067A]

3.2.1 Plutonium Production

Plutonium production consisted of operations directly associated with the manufacturing of plutonium metal parts including casting, rolling, forming, machining, and assembly processes. Building 707, constructed in 1972, was the primary weapons components production facility at RF. Building 707 was constructed after a fire in 1969 shut down foundry and machining operations in Building 776.[P053A] Figure 3-2 illustrates the general flow of plutonium through the production, recovery, and purification operations at the plant.

The foundry in Building 707 cast acceptable-purity metal into ingots that were shaped by rolling, forming, and machining processes. The resulting shapes were assembled into the finished parts. Assembled units were either sent to the Pantex Plant in Amarillo, Texas for final assembly, or retained at the plant for testing or surveillance.[P052A] Rejected parts, metal scraps, and turnings were returned to the foundry to be recast. Small pieces of metal, fines, and sweepings were typically burned to oxide and sent to be recovered in Building 771.

Plutonium metal was placed in tantalum crucibles and funnels and was heated inside a furnace vessel during the casting process. The used tantalum was oxidized and then returned to the furnace gloveboxes for reuse. Tantalum items to be discarded were processed by heating the items in a burn box to convert adhering plutonium metal to plutonium oxide. After cooling, the tantalum items were scraped or brushed off to remove the plutonium oxide.[P024A]

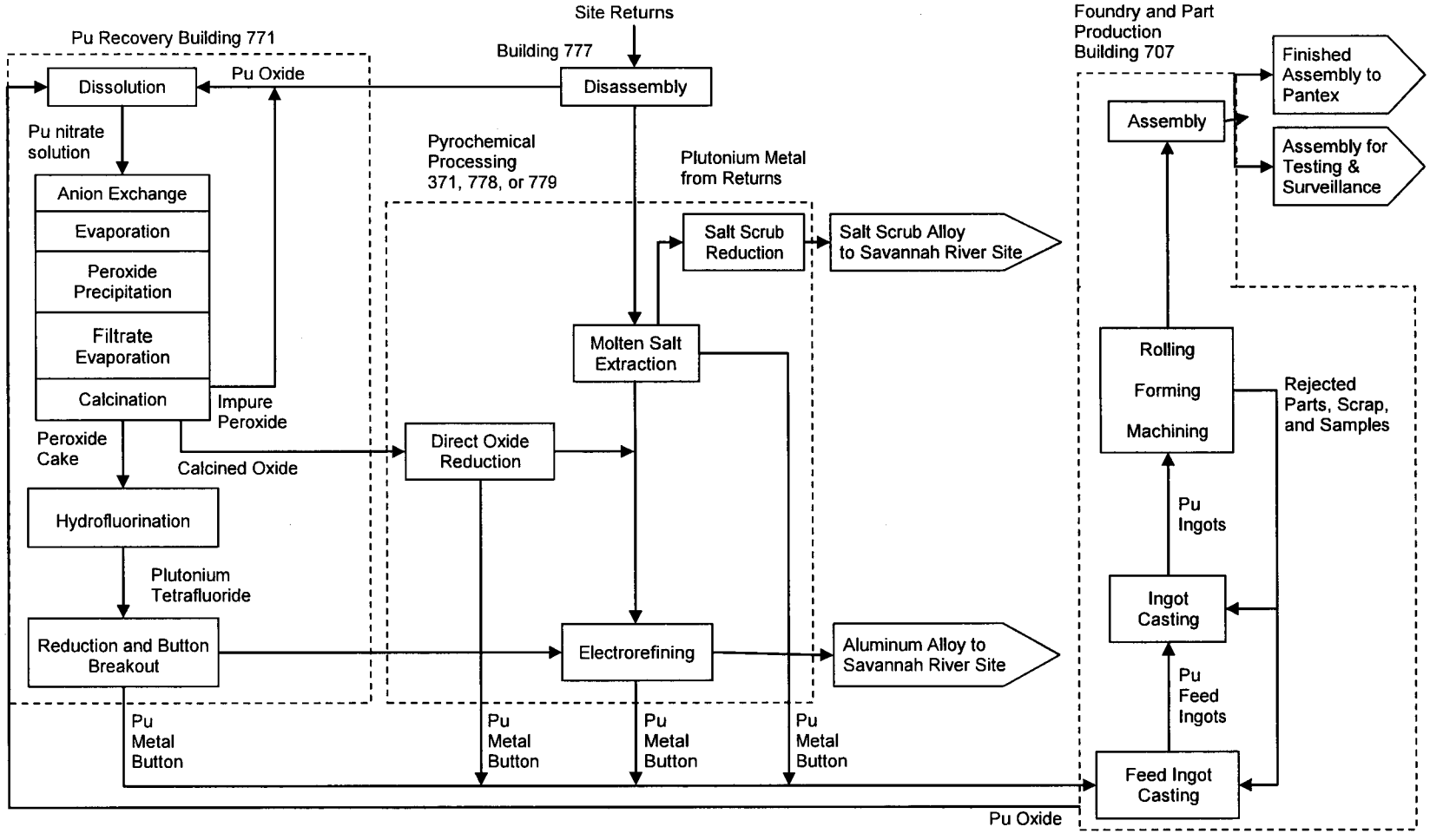

Figure 3-2. Plutonium production, recovery, and purification flow diagram.

Halogenated solvents were used in production operations to clean and degrease plutonium parts and metal. In addition, the solvents were used with cutting oils (e.g., Shell Vitrea or Texaco Regal A paraffinic oil) to cool plutonium parts during machining. Carbon tetrachloride; tetrachloroethylene; 1,1,1-trichloroethane; 1,1,2-trichloro-1,2,2-trifluoroethane; trichloroethylene; and methylene chloride were the primary solvents historically used during plutonium production. Tetrachloroethylene was replaced by 1,1,1-trichloroethane for degreasing during the 1973 time frame. Several non-halogenated solvents were also used for cleaning and degreasing, primarily during efforts to reduce use of halogenated solvents.(P023A, P052A, P091A, P444A, P060A) These solvents included isopropyl alcohol, ethanol, and acetone.(P052A, P053A, P067A) Building 777 housed the carbon tetrachloride and 1,1,1-trichloroethane systems that collected and filtered solvents generated during production operations. In addition to cleaning and degreasing parts, solvents were also used to clean plutonium operation glovebox lines.(P053A)

3.2.2 Plutonium Recovery and Purification

Several operations at the plant were responsible for either the purification of non-specification plutonium metal or the recovery of plutonium from production waste and residues. Dissolution and leaching technologies were used in Building 771 recovery operations to extract plutonium from waste materials and other residues. Plutonium purification was performed primarily in Buildings 371, 776, 771, and 779. Figure 3-2 illustrates the relationship between the production, recovery, and purification operations at the plant.(P052A)

Recovery operations in Building 771 used acid dissolution to dissolve solid materials containing plutonium. The resulting liquid was processed by a series of ion exchange, precipitation, evaporation, calcination, fluorination, and reduction operations to produce plutonium metal to be recycled back into production operations.(P052A) Building 771 also recovered plutonium surface contamination from EU hemishells and recovered and purified ^{241}Am.(P164A)

Plutonium metal from returned parts and metal from other DOE facilities was purified at RF. Plutonium-241 decays to ^{241}Am, which decreases the effectiveness of the plutonium parts. Beginning in 1967, the MSE process in Building 776 was used to remove ^{241}Am from site-return and other non-specification plutonium. The americium contaminated plutonium parts were disassembled in Building 777.(P053A, P113A) The americium was recovered by the MSE process using sodium chloride, potassium chloride, and magnesium chloride.(P053A) Americium was separated from the MSE residue salts using potassium hydroxide precipitation followed by an ammonium thiocyanate anion exchange process.

In 1975, the MSE process changed to cation exchange followed by anion exchange (no thiocyanate) and then precipitation using oxalic acid.(P113A, U047A) The process changed again the following year to the salt scrub process, which used a magnesium/zinc or a magnesium/aluminum extractant.(P052A, U047A) The purified plutonium metal from MSE was either sent to the foundry in Building 707, or sent to the electrorefining process in Building 371 or Building 776 if the metal contained other impurities.(P053A, U047A)

Spray leaching (Building 771) and hydride leaching (Building 779) also used acids to remove plutonium surface contamination from uranium metal and other metals or beryllium contamination from plutonium metal. These processes used nitric, hydrochloric, sulfuric, and sulfamic acids.(P053A, P061A, P062A)

Electrorefining operations in Buildings 371 and 776 were used primarily to purify metal from other production processes that did not meet the purity specification required by the foundry. The metal included miscellaneous metal from the foundry and non-specification metal from DOR, MSE, and plutonium fluoride reduction. Electrorefined buttons were sent to the foundry to be batched and then cast. Anode heel from electrorefining operations was alloyed with aluminum for processing at the Savannah River Site.(P052A)

In the electrorefining process, non-specification plutonium metal, cast as an anode, was combined with magnesium chloride and an equimolar mixture of sodium chloride and potassium chloride in a magnesium oxide crucible. The crucible and contents were heated in a furnace until the mixture was molten. A cathode and an anode/stirrer were then lowered into the molten mixture. A current was applied to the anode/stirrer, which flowed through the mixture to the cathode. Plutonium ions migrated through the salt to the cathode and were reduced to purified metal. After the cathode and anode were removed, the crucible was allowed to cool before it was removed from the furnace. The crucible was broken and the purified plutonium metal was separated from the salt and anode heel. The plutonium was analyzed and then sent to the foundry for production.(P139A, P163A)

In the DOR process, calcined plutonium oxide was placed in a magnesium-oxide crucible with calcium chloride and calcium metal. The crucible and its contents were placed in a furnace and heated until the contents were molten. The molten mixture was stirred until the reduction was complete. After the mixture cooled, the contents were removed and the plutonium metal was separated from the salt phase. Depending on the purity of the plutonium, it was either sent to the foundry or it was further purified in the electrorefining process.(P139A, P163A)

Ion exchange processes were important to the plutonium purification processes at RF. Anion exchange resin was part of the main plutonium recovery operation in Building 771. Plutonium contaminated materials were often dissolved in nitric acid and processed through ion exchange. The dissolution process created plutonium nitrate solution. The ion exchange resin contained in a glass cylinder was loaded with plutonium by passing the plutonium nitrate solution through the column. Americium and other impurities passed through the column without being loaded on the resins. Ferrous sulfamate and aluminum nitrate were added to the plutonium nitrate solution to aid in the sorption of the plutonium on the resin. The plutonium was then eluted from the resin by passing a dilute nitric acid solution through the column.(P052A, P061A)

The anion exchange processes used for plutonium recovery operations and special recovery operations operated in a similar manner. The major differences between the two processes were: (1) flow rate of the solution, (2) the special recovery process was used to separate plutonium and neptunium from impurities, or plutonium from EU, and (3) small amounts of hydrofluoric acid and sodium nitrite were used as needed in the special recovery process.(P061A, P095A, P096A, P102A, P105A)

The cation exchange process for plutonium purification used the same general steps as anion exchange, but with a different type of resin. In addition, the plutonium was loaded onto the resin with a hydrochloric acid solution and removed with nitric acid.(P052A, P061A)

Prior to 1975, a combination anion and cation exchange process was used to purify americium from plutonium and other metals as part of the americium recovery process. The americium and plutonium were loaded onto a hydrogen form cation exchange resin with a nitric acid solution. The resin was water washed to remove any residual nitric acid. A weak ammonium thiocyanate solution was trickled through the resin to remove iron and other impurities. A stronger ammonium thiocyanate solution was then trickled through the resin to remove the americium and plutonium. The resin was washed again to remove residual ammonium thiocyanate solution prior to repeating the nitric acid loading process.(P113A)

The americium and plutonium solution from the initial cation exchange purification was trickled through chloride from anion exchange resin columns. A strong ammonium thiocyanate solution was trickled through the resin to remove cerium, yttrium, and other rare earth metals. Residual ammonium thiocyanate was removed using vacuum. The americium and plutonium were removed with a hydrochloric acid solution.(P113A)

The solution from the anion exchange purification was concentrated through use of another cation exchange step. Plutonium and americium were separated in a final anion exchange step. A small amount of nitric acid added to the americium and plutonium solution caused the plutonium to load on the chloride from resin and the purified americium would pass through the column to the next americium recovery step. The plutonium was removed from the column with water and returned to the main plutonium recovery process.(P113A)

The salt scrub process was used to reduce and concentrate actinide ion metals present in residue salts from the MSE process (described in Section 6.1.1) into a stable non-oxidizing metal alloy. The salts were combined with a reducing agent and alloying agent; the combinations used included magnesium and aluminum, calcium and gallium, and calcium and cerium. The crucible and its contents were placed in a furnace and heated until the contents were molten. While molten, the plutonium and americium were reduced by the calcium or magnesium and the actinides were taken up in the metal alloy phase. The molten mixture was stirred until the reduction was complete. After the mixture cooled, the contents were removed and the scrub alloy button was separated from the salt phase.(P139A, P163A)

Hydride operations were conducted in Building 779 to recover plutonium from various substrates by reacting plutonium metal with gaseous hydrogen in an argon-inerted glovebox.(P052A, U059A, P062A, P163A) Hydriding produced plutonium metal for use in the foundry or non-specification feed to pyrochemical operations in addition to plutonium oxides sent for aqueous recovery.(C184A, P062A) The hydriding process formed plutonium hydride, which was converted to plutonium dioxide by oxidizing the material in an air atmosphere.(P163A)

3.2.3 Uranium Processing

Uranium casting, machining, and assembly were performed in Building 444 until 1989, when the foundry in this building was shut down. Building 447 operations included casting, welding, chemical milling, and heat treatment. Building 865 was built in 1972 to support R&D of beryllium and DU operations associated with casting, machining, rolling, heat treating, chemical etching, and cleaning. Uranium rolling, shearing, blanking, trepanning, forming, and heat treating were conducted in Building 883. Uranium processing in Building 883 increased considerably between 1980 and 1985 to support the manufacturing of hundreds of tons of DU for armor plates for the Army's M1A1 tank.(P053A)

3.2.4 Laboratory Operations

The laboratories in Buildings 371, 771, and 559 supported production operations at the site. The primary function of the laboratories was to provide sampling and analytical support for production activities. In addition, the laboratories supported recovery, purification, and liquid waste treatment operations. Each of the laboratories used numerous acids, bases, solvents, and other chemical reagents including acetone, benzene, carbon disulfide, chloroform, methanol, methylene chloride, toluene, and xylenes.(P061A, P076A, P081A)

Building 371 had an analytical laboratory and a chemical standards laboratory. The chemical standards laboratory prepared standards for various users and inspected standards used in the field. The analytical laboratory analyzed samples from various operations on site. The types of analyses performed included: (P081A)

- Total alpha activity
- Isotopic analysis
- X-ray emission
- X-ray diffraction
- Plutonium, uranium, and americium content
- Corrosivity
- Ignitability

Building 559 housed the Plutonium Analytical Laboratory responsible for spectrochemical, chemical, and mass spectrometric analyses of samples from plutonium production operations. Uranium, Raschig rings, solutions, and commercial product and gas samples were also analyzed in the laboratory. Plutonium production samples, including metal and oxide, were prepared and subdivided for analysis in the sample cutting process. The types of analyses performed included: (P067A)

- Emission spectroscopy
- Atomic absorption
- Infrared analysis
- Gallium analysis
- Plutonium assay
- Carbon analysis
- Uranium analysis
- Raschig ring analysis
- Tritium analysis
- Non-routine chemical analysis
- Anion/cation solution analysis
- Isotopic analysis
- Thermal analysis
- Gas analysis
- Spark source mass spectroscopy
- X-ray analysis

Building 771 housed analytical and chemical standards laboratories. The chemical standards laboratory prepared control sample standards for the analytical laboratories in Buildings 371, 559, and 771.(P061A) The analytical laboratory provided analyses in support of plutonium operations. The types of analyses performed included:(P061A, P067A)

- X-ray fluorescence
- Alpha/gamma scintillation
- Atomic absorption
- Laser fluorimetry
- Spectrophotometry
- Calorimetry
- Gamma spectroscopy
- Titrations

Buildings 559 and 881 each housed a chemical standards laboratory. The chemical standards laboratory prepared nitrate, oxide, and metal standards of uranium, plutonium, and americium for various users; inspected standards that had been used in the field; and developed methods for checking accuracy of analyses. Types of standards included equipment calibration standards, non-destructive assay (NDA) standards used at drum counters, and fluoride standards for chemical operations.(P076A, P059A)

Building 886 contained the critical mass laboratory where critical mass experiments were performed using uranium and plutonium in solutions.(P053A)

Table 3-3 is a list of the variety of reagents and solvents used by laboratories.

3.2.5 Waste Treatment

Waste processing at RF treated both liquid and solid process wastes. Liquid waste treatment was conducted in Building 774 (built in 1952) and Building 374 (became operational in 1980).(P053A) Solid TRU waste treatment was performed in Buildings 771 and 776.

3.2.5.1 Solid Waste Treatment

Solid TRU wastes were treated in Buildings 771 and 776. Wastes containing plutonium above the economic discard limit (EDL) were processed in Building 771. Wastes below the EDL were processed for disposal in Building 776.

Operations in Building 771 processed wastes including Raschig rings, HEPA filters, and sludge from the filter plenum and from process piping. Filters were disassembled to remove plutonium-contaminated dust (see Section 10.0). Process piping removed from service was cut up and cleaned of built-up sludge. Sludge from the process piping and from the filter plenum was dissolved in nitric acid to recover plutonium. Until 1984, plutonium was recovered from Raschig rings by nitric acid leaching.(P061A)

Table 3-3. Reagents and solvents used by laboratory operations at RF.

Acids/Bases

- Boric(P067A)
- Hydrochloric(P061A, P067A, P081A)
- Hydrofluoric(P061A, P067A, P081A)
- Nitric(P061A, P067A, P081A)
- Perchloric(P067A)
- Phosphoric(P067A)
- Sodium hydroxide(P061A, P067A, P083A)
- Sulfamic (P067A)
- Sulfuric(P067A, P083A)
- Tartaric(P067A)

Reagents

- Ammonium hydroxide(P083A)
- Ammonium molybdate(P067A)
- Ceric ammonium nitrate(P067A)
- Ceric sulfate(P083A)
- Ferrous sulfamate(P067A)
- Ferric chloride(P067A)
- Potassium bromide(P083A)
- Potassium chloride(P067A)
- Sodium fluoride(P067A)
- Total ionic strength adjusting buffer (contains diaminocyclohexane tetraacetic acid)(P061A)
- Trioctyl phosphene oxide(P061A, P081A)

Organic Solvents

- Acetone(P083A)
- Benzene(P053A)
- Carbon disulfide(P083A)
- Carbon tetrachloride(P053A, P067A, P083A)
- Chloroform(P053A, P067A, P083A)
- Cyclohexane(P061A)
- Ethanol(P083A)
- Isooctane(P083A)
- Isopropanol(P083A)
- Methanol(P083A)
- Methylene chloride(P053A, P083A)
- Petroleum ether(P083A)
- Toluene(P083A)
- Tributyl phosphate(P083A)
- 1,1,1-trichloroethane(P083A)
- Trichloroethylene(P083A)
- 1,1,2-trichloro-1,2,2-trifluoroethane(P067A, P083A)
- xylene(P083A)

Waste treatment operations in Building 776 consisted primarily of size reduction, sorting, washing, and packaging of solid waste materials for disposal. Size reduction in Building 776 removed materials from drums and sorted them in an airlock vault. Waste materials such as light metals, filters, glass, combustibles, and Raschig rings were packaged for disposal.(P067A) Beginning in approximately 1975, wastes contaminated with plutonium below the EDL were transported to size reduction in Building 776.(C103A, P001A, P124A) Dry Portland cement was added to the waste as a precautionary measure to absorb moisture, neutralize any residual nitric acid that may be present, and reduce the potential for drum pressurization. Prior to 1979, the waste was usually emptied from the original packaging (e.g., bottles, cans, or plastic bags) into a mortar box, mixed with dry Portland cement, and repackaged in a 15-gallon plastic bag. After 1979, waste received at size reduction in cans or bottles was removed and repackaged in a 15-gallon polyethylene bag. A small quantity of Portland cement was added to each bag and the bag was shaken to disperse the cement. Waste received at size reduction in plastic bags was processed by cutting open the bag, pouring in a small quantity of Portland cement, and shaking the bag.(P024A)

Advanced size reduction operations in Building 776 disassembled or cut plutonium-contaminated gloveboxes and miscellaneous large equipment into sizes that could be packaged in approved containers.(P110A)

3.2.5.2 Liquid Waste Treatment

Liquid waste treatment operations had relatively few process changes over the years. When Building 774 was built in 1952, its primary purpose was to treat radioactive aqueous waste from Building 771. Radionuclides were removed by precipitation, and the resulting slurry was filtered. The solids removed from filters were combined with cement or other solidifying agents.(P077A, P163A) The aqueous waste from this first stage went through a second precipitation.(P053A) These processes used sodium hydroxide, ferric sulfate, magnesium sulfate, and calcium chloride.(P109A) See Section 21.0 for a detailed description of these processes.

Around 1965, an evaporator was installed in Building 774 to treat liquids from the second stage treatment process and from the solar ponds. Evaporator salt waste generation is described in more detail in Section 6.0.(P016A, P077A, P082A, D035A)

Organic liquid wastes were also processed in Building 774. Organic liquid wastes were comprised of a variety of oils and solvents. Most of the oils were from spent lathe coolant used in the plutonium machining and degreasing operations in Buildings 707 and 777 and, therefore, were contaminated with actinide metals and oxides.(P052A) Lubricating oils used in machines throughout the plant are included in the organic liquid waste.(P164A) The spent organic liquid was filtered and then mixed with a solidifying agent. The process was later changed to a one-step process in which the organic liquid was mixed with Envirostone (gypsum cement) and allowed to set up.(P109A) The air from the process passed through a HEPA filtration system prior to being released.(P109A) The sludge waste generated from this treatment process is described in detail in Section 24.0.

Liquid waste streams were also generated from DU and beryllium operations conducted in Buildings 444, 447, 865, and 883.(P053A) In addition to uranium and plutonium contaminants, other radioactive elements may have been introduced from streams originating from special order work, laboratory, and R&D activities.(P164A) Radionuclides that RF handled, or had the potential to handle, in kilogram quantities included ^{241}Am, natural uranium and thorium, and ^{233}U.(C159A, U064A) Radioisotopes handled in gram quantities primarily for research and analytical activities included ^{244}Cm, ^{237}Np, ^{228}Th, ^{233}U, ^{238}Pu, and ^{242}Pu; low nuclear-generating station (NGS) plutonium (approximately 3 percent ^{240}Pu); and power-grade plutonium (up to 20 percent ^{240}Pu and 1 percent ^{241}Pu).(C134A, C137A, C185A, P179A, U064A)

Radioisotopes used for research and analytical activities are listed in Table 3-4. (U064A)

Table 3-4. Radioisotopes used for research and analytical activities at RF.

Radioisotope Name	Radioisotope Name
Actinium (^{228}Ac)	Mercury (^{203}Hg)
Aluminum (^{26}Al)	Neptunium (^{237}Np)
Americium (^{241}Am[a], ^{243}Am)	Nickel (^{63}Ni)
Antimony (^{125}Sb)	Plutonium (^{236}Pu, ^{238}Pu[a], ^{239}Pu[a], ^{240}Pu[a], ^{241}Pu[a], ^{242}Pu)
Argon (^{39}Ar)	Polonium (^{210}Po[a])
Barium (^{133}Ba[a])	Potassium (^{40}K)
Bismuth (^{207}Bi)	Promethium (^{147}Pm[a])
Cadmium (^{109}Cd)	Protactinium (^{231}Pa, ^{234}Pa)
Californium (^{250}Cf, ^{252}Cf[a])	Radium (^{226}Ra[a])
Carbon (^{14}C[a])	Ruthenium (^{106}Ru)
Cerium (^{139}Ce)	Selenium (^{75}Se[a])
Cesium (^{134}Cs, ^{137}Cs[a])	Silver (^{110}Ag)
Chlorine (^{36}Cl)	Sodium (^{22}Na)
Cobalt (^{57}Co[a], ^{60}Co[a])	Strontium (^{85}Sr, ^{90}Sr[a])
Curium (^{244}Cm, ^{246}Cm)	Technetium (^{99}Tc)
Europium (^{152}Eu, ^{154}Eu)	Thallium (^{204}Tl[a])
Holmium (^{166m}Ho[a])	Thorium (^{228}Th, ^{230}Th)
Iodine (^{129}I, ^{131}I)	Tin (^{113}Sn)
Iridium (^{192}Ir[a])	Tritium (^{3}H[a])
Iron (^{55}Fe[a])	Uranium (^{232}U, ^{233}U[a], ^{235}U[a], ^{236}U)
Krypton (^{85}Kr)	Ytterbium (^{169}Yb[a])
Lead (^{210}Pb[a])	Yttrium (^{88}Y, ^{90}Y)
Manganese (^{54}Mn)	Zinc (^{65}Zn)

a. Sources: sealed solids >10 microcuries, plated greater than one microcurie, or liquids >10^{-3} microcuries

3.2.5.1 Incineration

TRU incinerator wastes were generated by the plutonium recovery incinerator in Building 771, the FBI in Building 776, and test runs by the LSA and high-specific activity (HSA) incinerators in Building 371. See Section 10.0 for a description of the filtration of incinerator exhausts.

3.2.5.1.1 LSA and HSA Incinerators

The LSA and HSA incinerators in Building 371 were developed as volume-reduction incinerators. The startup operation test program used non-hazardous materials during test runs. The test revealed design concerns, and the incinerators never became operational.

3.2.5.1.2 Plutonium Recovery Incinerator

The plutonium recovery incinerator in Building 771 was constructed for two main purposes. The first was to reduce the volume of solid combustible wastes to reduce storage costs. The second was to generate an ash from which actinides, primarily plutonium and americium, could be recovered.(U047A) The incineration system was comprised of a multi-chamber, refractory-lined firebox; caustic scrubber system; dedicated vacuum system; heat exchangers; various tanks, pipes, and valves; and a filter plenum.(P061A)

Combustibles fed to the incinerator included paper, PVC and polystyrene bags, polypropylene and Ful-Flo filters, surgical gloves, PVC maintenance tents, and various types of sludge. The radioactively contaminated materials entered the glovebox from the drum hoist and bag-in area and were hand-sorted to segregate the combustibles. Non-combustibles, such as metal or glass wastes, were removed from the glovebox.(P052A, P061A)

The incinerator was comprised of three chambers; a firebox where combustibles were initially introduced into the system, a main burner chamber where ashes that fell through the firebox grate continued to burn, and an afterburner section.(U047A) Material was fed into the incinerator and was reduced by a 12:1 ratio, by weight.(P061A)Two air-to-gas heat exchangers drew in-room air to help cool the incinerator off-gas before it passed through a caustic scrubber, and a venturi, which increased the scrubbing efficiency of the potassium hydroxide caustic scrubber solution. After the off-gas passed through the scrubber, it was filtered through the incinerator filter plenum. Cooling air from the heat exchangers was filtered through the incinerator filter plenum and then through the main filter plenum where the gases were combined with other glovebox exhaust gases.(P061A) The potassium hydroxide solution from the scrubber was processed through the drum filter where particulate matter (fly ash) was entrained on diatomite filter media.(P067A, P016A, P061A, U013A) The plutonium recovery incineration process is presented in Figure 3-3.(P052A)

The low-level dissolution process was intended for high impurity/low plutonium content residues. The dissolution systems operated in the following way: ash was introduced into a glovebox system, fed by screw conveyor with calcium fluoride to the first dissolver pot, and allowed to cascade by gravity through a series of air lifted dissolver pots before overflowing into a pan-type nutsche filter. Aluminum nitrate was added to the last dissolver to complex any remaining fluoride and prevent corrosion of down-stream equipment.(P024A, P035A, P052A, P163A)

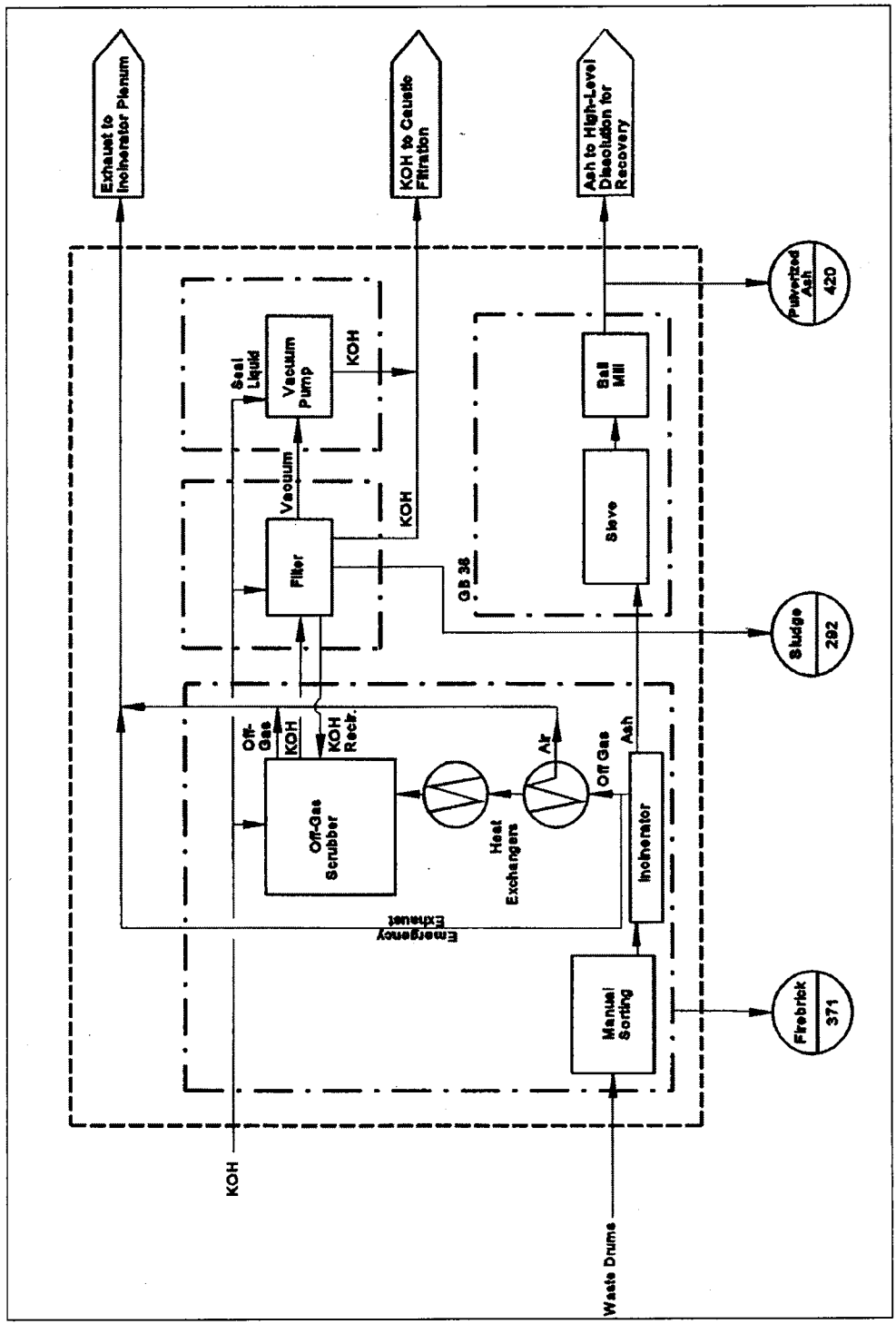

Figure 3-3. Plutonium recovery incineration process.

3.2.5.1.1 Fluidized-Bed Incinerator

The FBI received low-level plutonium-contaminated combustible solid and liquid wastes. The main purpose of the FBI program was to develop new technology to reduce volume and destroy volatile constituents prior to plutonium recovery operations.(P037A, P052A)

The first runs of the FBI were made from 1971 to 1978 in a pilot-scale unit. Test materials introduced into the incinerator included PVC, polyethylene, and paper. After 1974, paint thinner, tributyl phosphate, kerosene, and hydrazine hydrate were burned. In 1978, polychlorinated biphenyls (PCBs) mixed as one part PCB to four to five parts diesel fuel or kerosene were burned. The first runs of the full-scale FBI occurred from 1978 to 1981. These first runs used test materials such as newspaper, LLW from Building 776, combustible waste, kerosene, garage oil, and grease. Test runs conducted from 1985 to 1988 were conducted with methanol, diesel products, and non-radioactive surrogate combustibles (e.g., shredded coveralls, leather gloves, rolls of PVC plastic, wood, and paper).(P052A)

Liquid wastes were pumped through filters into two incinerator feed tanks. From these tanks, the liquid was sprayed into the incinerator through nozzles. Solid wastes were transferred to a glovebox for hand sorting where non-combustible materials such as metal and glass were removed. The combustible wastes were shredded and conveyed by screw feeder to the incinerator.(P067A)

The wastes were incinerated in fluidized beds of sodium carbonate and chromic oxide catalyst. The incinerator had a primary reactor and an afterburner. Process flue gases passed through two stages of cyclone separators, a stainless-steel sintered metal filter bank, and a one stage HEPA filter, before being exhausted into the HEPA filter plenum of the building ventilation system. The FBI process is illustrated in Figure 3-4.(P067A)

3.2.5.2 Immobilization

Particulate- and sludge-type wastes were immobilized by mixing with Portland cement and water.(P001A, P016A) Some of the wastes to be immobilized were first washed with water to remove residual materials. Portland cement and water were mixed and the waste to be solidified was added to the mixture. The slurry was poured into a one-gallon polyethylene container mold. After the mixture cured, the cemented pucks were removed from the molds and placed in a 55-gallon drum.(P098A) A brief description of the candidate wastes that were allowed by RF procedure to be immobilized is presented by IDC in Table 3-5.(P001A, P039A, P368) Process flow diagrams for miscellaneous cemented waste generating processes are provided in archived WSRIC information.(P060A–P062A, P070A, P077A–P079A, P081A, P082A)

Sludge wastes were cemented separately, as were resin wastes. Particulate wastes, such as grit, ash, and heel, may have been mixed together prior to immobilization.(P098A) Even though the sludges and resins were cemented separately, no documentation was available to determine which drums contain the sludges or resins.(C044A) Therefore, it is assumed that miscellaneous cemented wastes (IDCs 806 and 823) may contain any of the wastes that were immobilized.

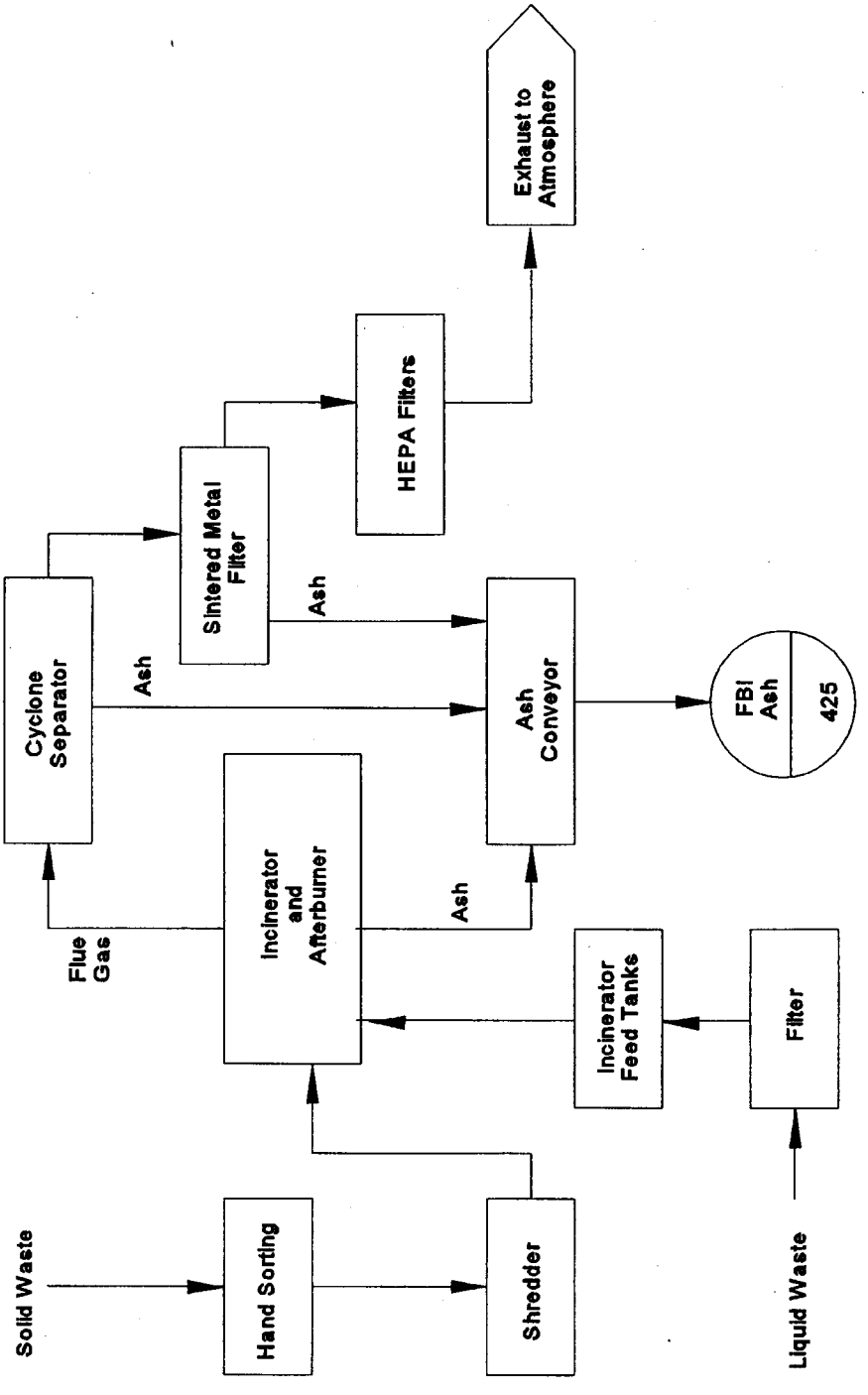

Figure 3-4. Fluidized-bed incineration process.

Table 3-5. Description of candidate wastes immobilized with cement.

IDC	Title	Description
159	Screenings from Oxide	Miscellaneous floor sweepings too large to sift through a screen mesh. May contain fine particles, metal, and glass.
290	Filter Sludge	Sludge from filter plenums and Nash pumps.
291	Dried Lab Waste Fluoride Sludge	A more detailed description for this waste was not identified.
292	Cemented Sludge	Sludge collected from the recovery incinerator in Building 771 (refer to Section 17.0).
310	Graphite Scarfings	Graphite particles below EDL produced from mold cleaning and floor sweeping.
311	Graphite Heels	Insoluble components remaining after leaching of graphite materials.
332	Oily Sludge	Sludge that contains oil and is not described by another IDC.
340	Sludge from Size Reduction Area	Sludge recovered from cleanup of equipment and clean-out of filter trap.
369	Leco Heel	Insoluble components remaining after leaching of Leco materials.
372	Grit	Grit blasting media in all forms.
373	Fire Brick Heel	Insoluble components remaining after leaching of incinerator fire brick.
378	Fire Brick, Pulverized or Fines	Particulate fire brick below EDL.
387	Reburned Sand, Slag, and Crucible (SS&C) Sweepings	Floor sweepings from button break-out, calcined to neutralize reactive metals.
390	Unpulverized Slag	Unpulverized slag (calcium fluoride) from button break-out. May contain calcium metal.
391	Crucibles and Sand	Unpulverized magnesium oxide sand and crucible from button break-out. May contain calcium metal.
392	Sand, Slag, and Crucible	Unpulverized magnesium oxide sand and crucible and calcium fluoride slag from button break-out. May contain calcium metal.
393	Sand, Slag, and Crucible Heels	Insoluble components remaining after leaching of sand, slag, and crucible.
394	Sand from Button Break-Out	Magnesium oxide sand from button break-out. May contain calcium metal.
395	Unpulverized Slag and Crucible	Unpulverized magnesium oxide crucible and calcium fluoride slag from button break-out. May contain calcium metal.
396	Pulverized Slag	Slag (IDC 390) that has been pulverized in a jaw crusher and hammer mill.
397	Pulverized Sand and Crucible	Sand and crucible (IDC 391) that has been pulverized in a jaw crusher and hammer mill.
398	Pulverized Sand, Slag, and Crucible	Sand, slag, and crucible (IDC 392) that has been pulverized in a jaw crusher and hammer mill.
399	Pulverized Slag and Crucible	Slag and crucible (IDC 395) that has been pulverized in a jaw crusher

Table 3-5. (continued).

IDC	Title	Description
		and hammer mill.
413	Impure Salt from Cell Clean-Out	Salts generated from scraping and cleaning of pyrochemical furnace cells. May contain sodium, potassium, magnesium, and calcium metals.(P052A)
420	Ash, Incinerator (Virgin)	Ash from the recovery incinerator in Building 771 that has been pulverized in a ball mill (refer to Section 17.0).
421	Ash Heels	Insoluble components remaining after leaching of ash (IDC 420) (refer to Section 17.0).
422	Soot	Airborne fly ash material that accumulated in the off-gas system of the recovery incinerator in Building 771 (refer to Section 17.0).
423	Soot Heels	Insoluble components remaining after leaching of soot (IDC 422) (refer to Section 18.0).
425	Fluid Bed Ash	Ash consisting of a fine powder generated by the FBI in Building 776 (refer to Section 17.0).
431	Leached Resin	Ion-exchange column resin below EDL.

3.2.6 Research and Development

Research and development included activities related to production, recovery, and purification as well as special-order work. Building 779, which was built in 1965, housed much of the R&D operations at the plant. Other areas at the plant supporting R&D included Buildings 771, 776, 777, 865, and 881.(P053A) Table 3-6 provides a history of R&D and special-order activities.

A description of the R&D areas is provided below. Most of the documentation pertaining to R&D activities does not specify the locations in which the work was performed; therefore, unless otherwise noted, it is assumed that any of the radioisotopes identified in Table 3-6 could have been handled in the R&D areas of any of these buildings.

In Building 771, special recovery anion exchange separated plutonium from other materials that were not suitable for the regular recovery processes. The chemical technology laboratories in Building 771 were used for aqueous plutonium R&D activities, such as determining the appropriate combinations for production processes. These labs conducted simulations of aqueous processes used for plutonium production, including dissolution, evaporation, precipitation, and calcination. Building 771 also contained R&D plutonium metallurgy operations that included alloy preparation, heat treating, rolling metal cutting, and metallurgical testing cutting. The process used plutonium alloys to simulate various operations conducted in Building 707.(C154A, P061A)

Table 3-6. Summary of research and development activities and special order work.

Date	Research and Development Activity
	Americium
1968–1986	Americium research projects included recovery of ^{241}Am by MSE and from MSE salt residues and solid process wastes, separation of cerium and other rare earth elements from americium oxide, and preparation of americium metal from americium tetrafluoride.(P178A–P202A)
July 1970	Development of the oxalate precipitation process for ^{241}Am purification began.(P183A)
October 1970	Development began on a tracer method using alpha spectroscopy and the addition of ^{243}Am spike for the determination of ^{241}Am in plutonium metal.(P184A)
November 1979–September 1981	Disks of ^{241}Am-Ce were cast for the Lawrence Livermore National Laboratory (LLNL) Radiochemical Diagnostic Tracer Program.(P196A)
November 1980–September 1981	Recovery of ^{241}Am from the residues generated from the Tracer Program.(P197A)
October 1984–September 1985	Methods were investigated for the separation of plutonium and americium from contaminated coral from Johnston Atoll through a request by the Defense Nuclear Agency.(P201A)
Unknown	Americium-240 reportedly used as a tracer material.(C159A, P053A)
	Californium
January 1973–June 1973	Study was conducted to determine the applicability of ^{252}Cf for reactor neutron interrogation of 55-gallon drums with approximately one milligram plutonium content.(P191A)
	Curium
1965–1970	WG Pu was alloyed with ^{244}Cm for use in the LLNL Radiochemical Diagnostic Tracer Program prior to 1970.(C159A, P053A, P164A)
1965–1975	Residues from Tracer Program were chemically processed in Building 771 to recover the plutonium. (C154A, C171A, P164A)
	Neptunium
October 1968–June 1969	Studies conducted to investigate the voltammetry of neptunium complexes and the thermal behavior of neptunium (IV) oxalate hexahydrate.(P178A, P179A, P180A)
April 1969–September 1969	Neptunium-237 metal foil fabricated for Los Alamos Scientific Laboratory (LASL).(P179A, P180A)
	Neptunium-237 metal purified for Argonne National Laboratory-West (ANL-W).(P179A, P180A)
	Neptunium-237 oxide purified for Oak Ridge National Laboratory (ORNL).(P179A, P180A)

Table 3-6. (continued).

Date	Research and Development Activity
Neptunium (cont.)	
July 1969– September 1969	Experiments on the oxidation of alpha-phase neptunium metal foil in air were conducted.(P180A)
January 1972– June 1972	Neptunium-237 metal disks and ^{237}Np oxide diagnostic neutron detectors were prepared for the Liquid-Metal Fast Breeder Reactor neutron dosimetry program.(P167A, P189A)
July 1974– December 1974	Studies conducted on the storage of ^{237}Np metal.(P193A)
November 1980– September 1982	Anion exchange and solvent extraction techniques were investigated for the separation and purification of plutonium from neptunium residues.(P197A, P198A)
November 1980– September 1985	Neptunium-237 metal and oxide prepared for the LLNL Radiochemical Diagnostic Tracer Program.(P197A, P198A, P199A, P200A, P201A)
October 1982– September 1984	Neptunium-237 oxide was purified for the ORNL Isotope Pool.(P199A, P200A)
	Plutonium
1970	Research was conducted on the synthesis of organoplutonium compounds for future applications in chemical vapor deposition and plutonium processing.(P181A, P182A, P184A)
April 1970– June 1970	Studies were done to determine the half-life of ^{239}Pu by calorimetry.(P182A) Lead-plutonium alloys and oxides were received from Lawrence Radiation Laboratory (LRL) for plutonium recovery.(P182A)
July 1971– September 1971	Three metal disks fabricated from highly enriched (98 percent) ^{242}Pu metal for LASL.(P187A)
July 1972– December 1972	A plutonium metal plate was fabricated for LASL using low NGS material (97.7 weight percent ^{239}Pu and 2.2 weight percent ^{240}Pu), and recovery of the low NGS plutonium from the residues.(P190A) ^{242}Pu metal target foil was fabricated for LLNL.(P190A)
January 1973– June 1973	Three ^{241}Pu metal target disks were fabricated for the Aerojet Nuclear Company.(P191A)
January 1977– June 1977	A plutonium metal rod (12 weight percent ^{238}Pu and approximately 6 weight percent ^{240}Pu) was prepared for LLNL.(P195A)
November 1979– October 1981	Plutonium-242 tracer disks prepared for the LLNL Radiochemical Diagnostic Tracer Program.(P196A, P197A)
October 1981– September 1982	Residues generated from the Tracer Program were processed to recover the plutonium.(P198A)

Table 3-6. (continued).

Date	Research and Development Activity
Plutonium (cont.)	
October 1983–September 1984	Plutonium-242 oxide was purified and converted to metal for the LLNL Tracer Program.(P200A)
Unknown	Plutonium-238 reportedly used as a tracer material.(C159A)
	Thorium
January 1975–June 1975	A 100-gram batch of high purity thorium oxide was received from ORNL for conversion to metal. RF converted the oxide to metal and fabricated it into targets to be used for a particle accelerator experiment at ORNL.(P194A)
	Uranium
1968, 1977, and 1979–1984	Development of several processes for the separation and recovery of the uranium and plutonium.(P178A, P195A–P200A)
October 1968–December 1968	A single ^{236}U metal button was produced for ORNL.(P178A)
April 1969–June 1969	Prepared mixed plutonium and uranium oxide for ANL-W.(P179A)
July 1969–September 1969	Uranium-233 metal prepared from ^{233}U oxide for ORNL.(P180A) Nickel and copper disks coated with ^{235}U oxide for LRL.(P180A)
July 1971–September 1971	Four ^{233}U metal disks were fabricated for ORNL.(P187A)
January 1972–June 1972	Three uranium buttons prepared for the Liquid-Metal Fast Breeder Reactor neutron dosimetry program. Each button was prepared with a different uranium isotope (^{235}U, ^{236}U, and ^{238}U).(P189A)
July 1973–December 1973	A passive-active gamma-ray system for the NDA of waste packages containing ^{233}U was investigated.(P192A)
July 1974–June 1975	Research performed on removal of ^{232}U daughters from ^{233}U. The in-growth reaches equilibrium at 10.3 years.(P193A, P194A)
November 1979–September 1982	A study was performed on the feasibility of reducing the plutonium in uranium oxide product shipped to ORNL for further processing.(P197A)
October 1980–September 1982	Uranium-233 tracer disks prepared for the LLNL Radiochemical Diagnostic Tracer Program(P197A, P198A)
October 1983–September 1984	Research was conducted on the adsorption of halogenated solvents on uranium dioxide.(P200A)

Building 776 and 777 had R&D coatings laboratories that evaluated and formulated chemical coatings for a variety of substrates, including stainless steel, copper, chromium, aluminum, and beryllium. The metal substrates were etched, cleaned, and degreased. The coating materials, uranium or plutonium, were applied as solutions or slurries and then placed in a furnace and heated. The coated substrates were evaluated to determine if they met certain specifications. This R&D facility supported production processes.(P078A, P079A)

The special weapons area in Building 777 assembled war reserve and other specially fabricated parts. The operation was also responsible for disassembly of surveillance (tracer) parts and drilling of parts for use in analytical testing. This process conducted ultrasonic cleaning, cold machining, plutonium oxidation, and machining.(P079A)

The purpose of Building 779 R&D was to gain more knowledge of the chemistry and metallurgy of plutonium and its interactions with other materials, which might be used in plutonium operations. Other activities in Building 779 included developing improvements to the manufacturing process, and finding new ways to recover plutonium and associated actinides. Another function was to develop a better understanding of the aging and shelf life limitations of RF products. Most of the materials used and wastes generated in this facility were the same as those in the production and recovery buildings, as much of the work conducted involved improvement of existing processes.(P053A)

The plant conducted special order work for other facilities in the DOE complex, the U.S. Department of Defense (DOD), or other federal departments or agencies. One example is the introduction of radionuclide tracers into pits destined for off-site test shots. This work took place in the 1960s and well into the 1970s. Materials such as ^{240}Am, ^{238}Pu, neptunium, curium, and cerium were blended in with the regular component materials for the purpose of studying performance of the different weapon components based on post-test distribution of the rare tracers. These tracer materials were kept separate from the regular production material streams, and special recovery operations in Building 771 specialized in recovering these more exotic materials.(C072A, P053A)

Some radionuclide tracers consisting of neptunium, curium, and cerium were fabricated in Building 881 in the 1960s.(U057A) The first neptunium processing was also done in this building.(C154A, U057A) Other TRU radionuclides used in Building 881 in the 1960s included ^{233}U.(C145A) There reportedly was some work performed with ^{233}U in 1975, as well.(C134A, C145A)

From approximately 1959 to the mid-1970s, RF was involved in Project Plowshare. The mission of the program was to develop technology for using nuclear explosives for peaceful applications such as excavation and uncovering of deep mineral deposits. Materials used in the manufacturing of these components were the same as those used in the production buildings.(P053A)

3.2.7 Routine Maintenance

Routine maintenance at RF consisted of a variety of activities supporting plant operations including utilities, filter testing and replacement, and change-out of oils, coolants, and Raschig rings. Most of the buildings contained maintenance operations for the building and peripheral areas. Utility operations included the upkeep of the heating, ventilation, and air conditioning (HVAC), fume scrubbers, and process vacuum systems. The Filter Testing group was responsible for in-place testing of plenum HEPA filters.(P053A) Waste produced by maintenance may have been contaminated by the materials and chemicals used in the area of generation.

The HVAC systems contained air supply units for filtering incoming air and plenums for filtering exhaust air. HVAC equipment was lubricated, generating waste oil and oily wipes. KW detergent was used for periodic maintenance inside and outside the plenums. Scrubbers housed in Buildings 371, 559, 771, and 779, used potassium or sodium hydroxide to neutralize acid fumes from various process off-gas streams and glovebox exhaust streams. Process vacuum systems provided an absolute pressure at a vacuum header, which served as a means to transfer fluids on demand by adjusting various valves.(P061A, P067A)

Oils, coolants, filters, and Raschig rings were used in numerous processes and required periodic change out. During oil and coolant changes, wipes were generated from spill cleanup. During Raschig ring removal, wipes, gloves, or other combustible materials may have been contaminated with oils, solvents, acids, or bases. Other general maintenance activities included repair or replacement of gloveboxes, tanks, valves, pumps, and pipes.(P108A, P061A, P067A, P109A)

3.2.8 Non-Routine Operations

Non-routine operations include spill clean-up, strip-out operations, and activities associated with fires and other contaminant releases.

Occasionally, spills of various materials occurred due to leaks in tanks and piping or from material releases from gloveboxes. Tanks or pipes may have contained acids, bases, or solvents used during normal process operations. A paint stripper containing methylene chloride was often used for decontamination.(P053A, P067A)

Another non-routine activity was the strip-out of glovebox lines, process piping, valves, and associated systems. Strip-out activities were performed when a glovebox line was scheduled to be replaced or during renovation. Solvents such as trichloroethylene or 1,1,1-trichloroethane may have been used during this type of operation for decontamination.(P067A, P108A)

Other non-routine activities such as fires and other contaminant releases include the following:

- 1969 fire which spread through combustible materials in several hundred inter-connected gloveboxes in Building 776/777(P053A)

- 1974 control valve release in Building 707 which allowed radioactive particulates to escape from an exhaust stack on the roof and into Module K(P053A)

- Tritium release in which tritium-contaminated plutonium was processed from April 9, 1973 through April 25, 1973 in Building 779 causing a tritium release to the atmosphere, as well as elevated tritium levels in surface waters, process wastes, equipment, gloveboxes, and exhaust plenums.(P053A)

3.3 TRU Waste Management

TRU waste management at RF was initiated at the point of waste generation and continued through final waste disposition. Waste management included segregation, packaging, storage, transportation, RCRA characterization, and certification. Administrative controls were put in place to ensure that TRU waste was properly managed.

3.3.1 Organization and Administration

Plutonium Operations and Quality Engineering and Control were the primary organizations at RF responsible for ensuring proper management of TRU waste. The Waste Operations department within Plutonium Operations was responsible for activities related to waste generation and certification including operating programs, policies, and procedures. Quality Engineering and Control supported Waste Operations by performing various testing and inspection activities including NDA, RTR, VE, waste analyses, and equipment and instrument calibration.(P014A)

At the INL, the RF waste containers are managed under the HWMA/RCRA Permit, Permit No. ID4890008952, until the waste streams are characterized for shipment to WIPP.

3.3.2 Waste Segregation

When waste was initially packaged, it was segregated by the type of waste matrix using IDCs. IDCs (also referred to as content codes) are a series of numbers (001 through 999) used to identify nuclear material forms or process materials.(P063A) Over the years, new IDCs have been added, obsolete IDCs have been deleted, and descriptions for some IDCs have been modified.(U014A) In addition, deleted IDCs may have been redefined. For example, IDC 807 was used originally for cemented incinerator sludge. After 1987, IDC 807 was reassigned to Building 374 Solidified Bypass Sludge.(P043A, P063A, P064A)

RF did not assign IDCs to waste containers until mid 1971; however, drum prefixes may be used to identify some of the waste forms. Drum prefixes were assigned by each generator building or material balance area (MBA) before the drum was sent to the counter. Prefixes can be used in most cases to identify the originating building or MBA within a building. The prefix corresponds to a MBA used to control the transfer of nuclear material. The title of an MBA usually corresponds to specific process operations. The prefix is identified by the first four digits

of the container number (not including the letters "RF").(U059A) The last five digits of the container number indicate the sequence in which drums were packaged within a given prefix. The majority of the pre-1971 sludge/salt waste can be identified by using the drum prefixes. The drum prefix for debris wastes can only identify the MBA or generating building and cannot be used to identify the type of debris waste. The majority of waste created during this time period consisted of 30- and 55-gallon containers of mixed TRU and mixed low-level waste (MLLW) homogenous solids, soil, and debris. Pre-1971 wastes were identified on the shipping papers in one of seven categories: combustible debris (I), filter paper (II), filters (III), inorganic sludge (IV), non-combustible debris (V), organic sludge (VI), and beryllium contaminated (VII).(P443A, C618A)

Based on drum prefixes, the sludge/salt wastes can be correlated to post-1971 IDCs as follows:

- Prefix 741 = IDC 001 First Stage Sludge
- Prefix 742 = IDC 002 Second Stage Sludge
- Prefix 743 = IDC 003 Organic Setups, Oil Solids
- Prefix 744 = IDC 004 Special Setups
- Prefix 745 = IDC 005 Evaporator Salts
- Prefix 995 = IDC 995 Sewer Sludge.

Waste was segregated for the purposes of assaying and controlling nuclear material.(P014A) Full drums were sent to the appropriate drum counter to determine if they contained recoverable TRU actinides, or contained TRU or LLW.(P035A, U016A) The determination of whether the drum contained recoverable material was based on an EDL. The EDL compared the cost of manufacturing plutonium in a reactor to recovering the plutonium from specific process wastes and residues. EDLs were established by the DOE for each IDC.(P035A, P053A)

Several types of assay were used at RF including segmented gamma scan (SGS), passive/active neutron (PAN), and radiochemical analysis. Low resolution SGS was used on low weight drums such as combustibles or filters to determine if the waste was TRU or low-level. High-resolution SGS provided assay values for plutonium, americium, and uranium for other IDCs. PAN assay was used on most IDCs to make a TRU or LLW determination.(U016A) The PAN system quantified the amount of TRU activity within a drum, and relative quantities were established based on the isotopic makeup of the waste. The SGS system was developed to verify actual radioisotopes present in the waste. When SGS was used in conjunction with PAN, actual quantities of individual isotopes could be established.(P033A) Radiochemical analysis was the primary assay method for batch samples or individual container samples of sludge wastes; however, PAN assay was also used for sludge waste.(U016A)

3.3.3 TRU Waste Packaging, Storage, and Transportation

From 1970 to 1971, drummed TRU waste was packaged in U.S. Department of Transportation (DOT) 17H 55-gallon drums. Since 1971, DOT 17C 55-gallon drums have been used. The different types of gaskets installed in the drums are shown in Table 3-7.(C057A)

Table 3-7. Drum gasket types.

Gasket Type	Time of Use at RF
Standard Neoprene	Until 1977
Tubular	1977–December 1982
Flow-In Ventable	December 1982–October 1988
Tubular with Carbon Filter	October 1988–Present

Approved liners were required in each TRU waste drum to provide contamination control, corrosion and puncture resistance, and radiation shielding. Other liners or packing materials may have been used inside of the required liners.(P063A) Liner and packing material configurations are provided in this document for each waste group in the waste packaging discussions in Sections 5.0 through 28.0. Additional packaging information was identified during RTR and VE confirmation activities. This information is provided in the AK summaries for each waste stream as well as RPT-TRUW-05, Waste Matrix Code Reference Manual. The various types of packaging materials used are shown in Table 3-8.

Table 3-8. Drum packaging materials.

Item	Description
Inner packaging	3-mil plastic bag, 12 × 18 inches(P008A)
	6-mil plastic bag, 18 × 24 inches(P008A)
	12-mil plastic bag, 10 × 72 inches(P008A)
55-gallon drum liners	90-mil rigid polyethylene liner(P039A, P123A)
	0.01 inch polyethylene round bottom liner(P008A)
	0.0055 inch polyethylene liner(P008A)
	0.051 inch fiberboard liner, 32 × 72 inches(P008A)

TRU waste was temporarily stored in buildings at RF designated by specific procedures. Drums were staged in areas during drum counting, inspection, and closing operations. Drums of TRU waste accepted for shipment were transferred to Building 664 before they were shipped off site.(P004A)

TRU waste was shipped to INL by ATMX railcar. Drums were placed in cargo containers that were loaded in the railcar. The cargo containers were secured by inflatable dunnage.(P004A)

Some waste was packaged in boxes rather than drums. In general, boxes contained materials from the same processes as drums. Frequently, boxes were used for oversize materials before or after size reduction, or to reduce void spaces when packaging oddly-shaped materials.(C289A) There were several types of boxes in use including SANDBoxes (Sandia boxes), standard waste boxes (SWBs), cake boxes, fiberglass reinforced plywood (FRP) boxes, and TX-4 oversize steel boxes.(C289A) Packaging techniques varied with box type though many box waste packaging techniques were similar.(P024A) Each plywood box was lined with a polyethylene box bag, and the bag was then lined with a cardboard liner. After the box was filled with waste, the bag ends and sides were folded toward the box center, and tape was used to seal the folded edges. Prior to 1972, uncoated plywood boxes were used. Coating plywood boxes with FRP began in 1972.(P024A) Other box types may have used plywood, fiberboard, PVC, or lead liners.(C289A)

3.3.4 Waste Characterization

The waste characterization outlined in this report are the generator-assigned hazardous waste numbers (HWNs) and do not represent the final HWDs. The final HWNs and TSCA regulatory status will be assigned upon approval of the applicable AMWTP WSPF.

3.3.4.1 RF Waste Characterization

In November of 1985, RF submitted RCRA Part B permit applications to the U.S. Environmental Protection Agency (EPA) and Colorado Department of Health to comply with the requirements of RCRA. On June 4, 1986, an Agreement in Principle was signed, which stipulated that a technical program would be developed to obtain information regarding waste generation and waste management at the plant. From May 1986 to March 1987, every process and process support waste stream at the plant was identified and characterized. EPA HWNs were assigned to low-level and non-radioactive wastes based on process knowledge or sampling and analysis of the waste stream. The information was compiled in the Waste Stream Identification and Characterization (WSIC) document. Because the final Compliance Agreement did not apply to TRU waste, wastes that contained or were thought to contain TRU materials were not segregated based on their hazardous constituents. Prior to the implementation of WSIC, no wastes (non-radioactive, low-level, or TRU) were segregated based on their hazardous constituents.(P067A)

In October of 1989, WSIC was expanded to provide RCRA characterization of TRU waste streams and to address residues (above EDL materials) generated at RF. This program, known as WSRIC, provided details on the nature, quantities, and hazards associated with non-hazardous, hazardous, radioactive, and mixed wastes that resulted from all aspects of operations at RF. Field investigations were conducted to identify, evaluate, and verify current RF

waste- and residue-generating processes, wastes and residues, and waste management units. Sampling and analysis was also performed to characterize mixed wastes and residues that were potentially hazardous based upon preliminary field investigations.

In December 1993, the Backlog Waste Reassessment (BWR) project was implemented. Existing characterization information was compiled for the stored inventory of wastes at RF, and a reassessment of that information was conducted to recommend and document the correct RCRA characterization. The universe of wastes included non-radioactive wastes, hazardous wastes, LLW and MLLW, TRU and TRU-mixed wastes, and residues and mixed residues in the RF inventory. Characterization was accomplished primarily using process knowledge and analytical data as sources. RF cognizant personnel were also interviewed and WSRIC Building Books were reviewed for archived and active waste stream characterizations.(P052A)

Beryllium metal was historically used in the manufacture/assembly of weapons components at RF and may be present in solid or particulate form in RF waste. For the RF waste stored at INL, the beryllium is present in particulate form at less than 1 weight percent except for IDC 800 which may contain beryllium greater than 1 weight percent based on analytical results from sampling conducted at RF. The other RF IDCs that contain beryllium greater than 1 weight percent were not shipped to INL by RF. (P436A, C945A)

3.3.4.2 INL Waste Characterization

In October 1996, the original revision of the AK baseline document (INEL-96/0280) was issued to specifically cover the RF wastes that had been shipped to the INL.(P368A) The primary objective was to provide a consistent, defensible, and auditable AK record for the INL inventory of waste drums in accessible storage at the INL TRU waste storage area. Characterization of the RF waste streams was based primarily on the AK record and augmented with the results from the INL sampling program components: RTR, HGAS sampling and analysis, NDA, and solid sampling and analysis, when appropriate. The characterization data are described in detail in the individual sections of the AK baseline document for characterized wastes.(P368A)

INL characterization of the RF homogeneous solids wastes was initiated in 1996 and drums from these waste streams were subsequently sampled (cored) at ANL-W. Solid sampling was split into two phases. Each phase involved samples selected at random, but the candidate drum population from which the samples were selected differed for the two phases. Phase II samples were randomly selected across the waste streams. The data were used to characterize three homogeneous solids waste streams for the 3,100 m^3 Project, because the sampling plan and analytical procedures used were based on EPA protocol and were shown to be compliant with WAP requirements.

The INL homogeneous solids sampling plan is described in Engineering Design File (EDF)-909, Transuranic Waste Sampling Plan for the Idaho National Laboratory.(P304A) A discussion of the waste streams that were sampled and the collection of representative samples from those waste streams are included. Assessments of the solidified sampling and analysis data,

including the pre-WAP data, were included in a series of reports, one for each of the waste streams that were sampled. Each report also incorporated AK, waste form sampling, chemical analyses, and HGAS data. These reports are listed below:

- Hazardous Waste Code Determination for First/Second Stage Sludge Waste Stream (IDCs 001, 002, 800), INEEL/EXT-01-00015[P219A]
- Characterization of Rocky Flats Plant Building 374 Sludge Waste Stream (IDCs 007, 803, 807), INEEL/EXT-01-00517[P220A]
- Characterization of Rocky Flats Plant Building Miscellaneous Cemented Sludge Waste Stream (IDCs 292 and 807b), INEEL/EXT-02-00112[P287A]
- Characterization of Rocky Flats Plant Solidified Organics Waste Stream (IDCs 700 and 801), INEEL/EXT-02-00028, Draft.[U099A]

Characterization activities, including HGAS, RTR, NDA, VE, and gas generation testing (GGT), were certified under the WAP by CBFO during fiscal year (FY) 2000. Homogeneous solid waste sampling and analysis procedures were certified in FY 2001. Characterization using RTR, NDA, and HGAS data applied to all the drums in the inventory for the 3,100 m^3 Project. VE was performed on a random sampling of drums for each waste stream category group as required to determine miscertification rates. GGT was performed on containers of waste containing water and/or organic substances that could radiolytically generate combustible gases or were identified as test category wastes. Solid samples were collected on randomly selected homogeneous solid waste drums to complete characterization.

RTR data stored in the Transuranic Reporting, Inventory, and Processing System (TRIPS) are summarized in EDF-3395, Summary RTR Data for the 3,100 m^3 Project.[P358A] During the life of the 3,100 m^3 Project, approximately 20,000 containers were examined by RTR. The approximate overall success rate, defined by a final, approved status of "WIPPOK" was 89 percent. Data in this EDF are organized and presented for individual waste streams except for IDC wastes that were not included in waste steams or had not been planned for the project, in which case, the data are presented by IDC.

HGAS data are presented in EDF-3396, Summary Headspace Gas Data Collected During 3,100 m^3 Project.[P359A] The data presented in this EDF are summaries of the HGAS data for each waste stream generated by the Environmental Chemistry Laboratory (ECL) and stored in TRIPS. During the life of the 3,100 m^3 Project nearly 18,000 containers were sampled and the resulting samples analyzed. The overall success rate, defined by a final approved status of "WIPPOK" was 99.8percent. Data in this EDF are organized and presented for the individual waste streams. An AK resolution was prepared to capture the statistical assessment of HGAS data using a transformation approach as compared to the 3,100 m^3 Project normally distributed approach.[P359A]

NDA data are presented in EDF-3374, Radioassay Data Collected During 3,100 m3 Project Project.[P322A] The radioassay data stored in TRIPS are summarized in this EDF. During the life of the 3,100 m^3 Project approximately 20,000 containers were assayed with an overall success rate of 82 percent of containers being labeled as "WIPPOK." More than 30,000 assays were performed among the radioassay systems. Three radioassay systems were in operation during this time period. The PAN system coupled with a gamma system was the primary quantitative radioassay system used during the project. Two gamma spectrometry systems, Stored Waste Examination Pilot Plant (SWEPP) Gamma-ray System (SGRS), and Waste Assay Gamma System (WAGS) were also used for direct quantitative assay in addition to providing isotopic distribution information for the PAN system. The PAN system assayed over 16,000 unique waste containers while SGRS and WAGS quantitatively assayed over 2,000 and 3,000 unique waste containers, respectively.

Targeted waste streams as listed below were characterized using data from RTR, HGAS, NDA, and solid sampling and analysis (as appropriate). EPA HWNs were assigned to the wastes based on AK, RTR, HGAS, and solid sample characterization data.

Not all containers from waste streams with approved WSPFs could be certified for shipment or for disposal at the WIPP facility because of the presence of prohibited items (PIs), such as liquid in excess of the WIPP WAC limits, lead-acid batteries, or inner containers greater than four liters. These containers were retained in storage at the INL to be dispositioned later. Such wastes retain only those HWNs originally assigned by the waste generator.

Fifteen WIPP-approved WSPFs were developed during the 3,100 m^3 Project. The WSPFs were based on AK and confirmed during waste characterization activities at the INL. A list of WIPP approved WSPFs follows:

- INW276.001, Non-hazardous Debris–Graphite Molds IDC 300 (February 1999)[P289A]
- INW276.002, Non-hazardous Debris–Graphite Molds IDC 300 (August 1999)[P289A]
- INW276.003, Non-hazardous Debris–Graphite Molds IDC 300 (July 21, 2000)[P205A, P211A]
- INW276.004, Hazardous Debris–Graphite Waste IDCs 300, 301, 303, and 312 (September 27, 2000)[P212A]
- INW296.001, Hazardous Debris–Light Metals Waste IDCs 480 and 481 (November 14, 2000)[P213A]
- INW243.001, Hazardous Debris–Glass (except Raschig rings) Waste IDC 440 (March 28, 2001)[P215A]

- INW211.001, Hazardous Debris–Filter and Insulation Media IDCs 335, 376, and 490 (April 24, 2001)(P216A)
- INW216.001, Hazardous Solids–First and Second Stage Sludge IDCs 001, 002, and 800 (May 24, 2001)(P217A, P219A)
- INW218.001, Hazardous Solids–Building 374 Sludge IDCs 007, 803, and 807a (July 24, 2001)(P218A, P220A)
- INW247.001, Hazardous Debris–Raschig Rings IDCs 441 and 442 (November 14, 2001) (P214A)
- INW169.001, Hazardous Debris–Combustible Waste IDCs 330 and 336 (February 7, 2002) (P284A)
- INW198.001, Hazardous Debris–Plastics Waste IDC 337 (February 7, 2002)(P285A)
- INW222.001, Hazardous Solids–Miscellaneous Cemented Sludge IDCs 292 and 807b (April 24, 2002)(P287A, P288A)
- INW161.001, Hazardous Debris–Firebrick/Coarse Firebrick IDCs 371 and 377 (October 3, 2002)(P306A)
- INW252.001, Hazardous Debris–Leaded Rubber Gloves and Aprons IDC 339 (November 15, 2002).(P305A)

3.3.4.3 Radionuclides in RF Waste Streams

The primary radionuclides processed at RF are WG Pu, ^{241}Am, EU, and DU.(P368A, P398A) The chemical form of radionuclide contaminants and radioassay interferences are also described in the following section. Relevant details for particular waste streams are provided in the chapters discussing those waste streams.

R&D projects that used TRU radionuclides were conducted in Buildings 771, 776, 777, 779, and 881. Most of the documentation pertaining to R&D activities does not specify locations in which the work was performed, and unless otherwise noted, it was assumed that any of the radionuclides could have been handled in the R&D areas of any of these buildings. In addition to WG Pu, ^{241}Am, EU, and DU, the following radionuclides were processed during R&D activities:(C134A, C137A, C185A, P053A, P164A, P167A, P189A, P190A, P194A, P195A, P198A, P200A, U064A)

- ^{240}Am
- ^{244}Cm
- ^{237}Np
- ^{238}Pu, ^{240}Pu, ^{241}Pu, and ^{242}Pu

- Low NGS plutonium (less than 3 percent ^{240}Pu)
- Power-grade plutonium (up to 20 percent ^{240}Pu and 1 percent ^{241}Pu)
- ^{228}Th
- ^{233}U, ^{235}U, ^{236}U, and ^{238}U.

The chemical form of radionuclide contaminants and radioassay interferences, are as follows:

- Radioassay interferences may include beryllium from Part V metal fabrication in Building 707, and calcium fluoride, which was sprayed onto graphite molds in Building 707 prior to casting.(C184A, P060A)
- Other interfering waste contaminants include aluminum, beryllium, and stainless steel (chromium), which were machined in Building 777.(P079A)
- The different actinide forms are plutonium nitrate, plutonium chloride, plutonium peroxide, plutonium dioxide, plutonium tetrafluoride, and plutonium metal. Radioassay interferences may include aluminum nitrate from the dissolution process and beryllium, which was removed during Part V leach.(P163A)
- The americium was in a chloride, hydroxide, nitrate, oxalate, and oxide chemical form during different steps of the process. Prior to 1975, ammonium thiocyanate also was used.(P053A)
- The chemical forms of the radionuclide contaminants from the Oralloy leach process are plutonium nitrate and uranyl nitrate.(C184A, P061A, P163A, U059A)
- Plutonium metal was the feed and product of the MSE and electrorefining processes, wastes generated from these processes were contaminated with actinide metals, which probably formed an oxide or hydroxide layer from reaction with dry and moist air.(P163A, P175A)
- MSE residue salts containing actinide chlorides were the feed to the salt scrub process. Metal was the product of this process as well, so the radionuclide contaminants could be in a metal, oxide, and/or hydroxide form. Radioassay interferences may include chloride salts (i.e., sodium, potassium, magnesium, calcium, and zinc).(P163A)

3.3.4.3.1 Compilation of Radionuclides of Concern

Activity values of radionuclides were quantified and reported in accordance with Appendix A of the WAC, Sections 3.1.4, 3.3.1, and 3.7.1.(P362A, P398A) INL based most alpha-emitting nuclide activities on NDA measurements and not AK. The NDA radioassay systems

used at the INL measured ^{241}Am, ^{238}Pu, ^{239}Pu, ^{240}Pu, ^{241}Pu, ^{233}U, ^{235}U, and ^{238}U activities. Default values for mass isotopic ratios for the plutonium isotopes were obtained from 2,556 high resolution gamma spectrometric measurements of RF wastes.(P227A) Decision criteria for using default versus measured values were specific to the assay system. Determination of ^{242}Pu used its mass fraction in WG Pu, based on AK of RF wastes. Each drum assay included high resolution gamma spectrometry and the data from these measurements were reviewed to confirm the applicability of the default mass isotopic values.(P240A, P280A) Use of mass isotopic ratios for the plutonium isotopes, other than the default values, required a documented disposition as an anomaly. Default isotopic values were used only for the plutonium isotopes. Mass values for ^{241}Am, ^{233}U, ^{235}U, and ^{238}U, were based on the individual gamma spectrometric measurements. The ^{234}U activities were calculated based on ratios with detected uranium isotopes.

Detection of fission products, including ^{137}Cs and ^{90}Sr, was not expected in any of the RF TRU waste streams; however, it was a common practice at RF to dispose of radionuclide sources, including ^{137}Cs, in waste containers (IDC 002, 004, and 480).(U043A) During the 3,100 m^3 Project, ^{137}Cs was not detected in any of the containers assayed. The absence of ^{137}Cs was verified during radioassay using the 661 keV line as described in the INL EDF-840, Document SWEPP NDA Compliance Development.(P240A)

Wastes from some of the processes described above may not be contained in the inventory based on the assigned prefixes; however, it is assumed that repackaged drums could contain waste generated from any process.

3.3.4.3.2 Radioassay Data

During the 3,100 m^3 Project all candidate waste containers were assayed for radionuclide content at the Radioactive Waste Management Complex (RWMC).(P368A) Three radioassay systems were in operation during this time period. The PAN coupled with a gamma spectrometry system was the primary system in use. Two additional absolute gamma systems were also used: the SGRS and the WAGS. The overall yield for radioassay data from any individual waste stream is a compilation of the data from all three radioassay systems at the RWMC and is found in the WSPFs. The data for the individual radioassay systems information are contained in EDF-3374.(P322A) These radioassay data are consistent with results currently found in the AMWTP.(P487A)

3.3.4.4 Complexing Agents

Because complexing agents can aid in the transport of TRU radionuclides from the waste after disposal, the waste was assessed for potential complexing agents. This information may also be added to the chemical compatibility studies since limited AK information is available for these chemicals.

Ethlyenediaminetetraacetic acid (EDTA) is an example of a chelating compound. Chelating compounds are often found as constituents in commercial cleaning products. Versene (a trade name for EDTA) and citric acid are known constituents of KW decontamination detergent.(P024A, P068A) KW was used during a variety of decontamination activities at the plant. A buffer solution total iconic strength adjustment buffer containing diaminocyclohexane tetraacetic acid was used during specific ion electrode analysis in Building 559.(P076A) Oxalic acid and tetraphosphoric acid were used to etch plutonium and other metals.(P062A, P079A, U043A) Oxalic acid was also used for americium recovery. (P113A) All wastes may be contaminated with trace quantities of these complexing agents.

3.3.4.5 Real-Time Radiography

RTR examinations during the 3,100 m^3 Project were used to confirm the physical form and the absence of PIs.(P368A) A synopsis of the RTR data results is contained within this document. The full compilation of RTR data are summarized in the RF AK Document.(P368A)

3.3.4.6 Prohibited Items

Prohibited items identified in RF waste streams were detected during RTR or VE activities. Prohibited items identified during the 3,100 m^3 Project are summarized in the RF AK Document.(P368A) Prohibited items identified from AMWTP characterization activities are documented in RPT-TRUW-05.(P399A) However, PIs may be present in IDCs other than those identified in these two documents. Containers with PIs identified during characterization activities are segregated, treated, and/or repackaged to remove the items before certification and shipment.

3.4 TRU Waste Certification

In 1978 and 1979, the WAC for the WIPP were initially developed and documented in WIPP/DOE-069, Report of the Steering Committee on TRU Waste Acceptance Criteria for the Waste Isolation Pilot Plant.(P027A) During 1979 through 1995, the INL began characterizing TRU wastes stored on site and WIPP developed its experimental test program. In 1998 EPA certified WIPP open for receipt and disposal of non-hazardous waste, the INL generated the original certification to ship non-hazardous debris drums, and the non-hazardous debris waste stream INW276.003 for graphite was approved by CBFO in 1999. WIPP received certification for hazardous debris and hazardous solid waste in 2000 and 2001, respectively. In 2002, the WIPP WAC was further delineated into the CH WAC and the RH WAC. DOE facilities generating or storing TRU waste have implemented certification programs in order to comply with the WIPP WAC. Sections 3.4.1 and 3.4.2 describe the certification activities that have been conducted by RF and INL for TRU wastes generated at RF.(P014A)

3.4.1 RF Certification

RF implemented a program in May 1983 to certify TRU waste for future shipment to WIPP. The TRU waste certification procedures emphasized an efficient, effective, and auditable program that would comply with all existing orders, guidelines, and regulations.(P014A)

Waste Operations was responsible for providing assistance to waste generators, and for the promulgation of TRU waste certification operating programs, policies, and procedures. Waste Operations also implemented the certification program, which included operator indoctrination, performance of internal departmental program audits, verification inspection, and final certification of waste packages.(P014A)

After containers were assayed, they were sent to Building 776 for inspection. Containers would undergo a physical inspection that included content verification, free liquid detection, and a waste packaging conformance check. Rejected waste packages were returned to the generator for corrective action.(P014A, P043A) As final quality assurance verification, RTR was performed on each container to verify correct contents and the absence of free liquids.(P001A)

Quality Engineering and Control assisted Waste Operations in implementing, continually reviewing, and updating the RF Certification Plan for TRU Waste. Quality Engineering and Control was responsible for formal periodic plant audits and surveys of the overall TRU waste certification programs and activities. This group was also responsible for interfaces, for review and approval functions for the development, design, procurement, manufacture, and utilization of waste containers, and for operational and certification procedures used by Waste Operations.(P014A)

3.4.2 INL Certification

Several programs and studies were conducted at INL to characterize and certify the TRU waste inventory. The programs were established to increase knowledge of the waste inventories to properly manage the wastes until final disposal. Specific characterization activities included the review of process knowledge, RTR examinations, radioassay, drum HGAS, inner bag gas sampling, VEs, and core sampling and analysis.(P033A)

The Characterization and Categorization Program was implemented to confirm that drums shipped from RF had been assigned appropriate IDCs. During 1979 and 1980, 70 drums were visually inspected and gas samples were collected from the bags in the containers.(P033A)

During the TRU Waste Sampling Program, conducted between 1983 and 1985, containers were examined and sampled to assess compliance of the waste with the WIPP WAC and to test the INL RTR system. RTR examination of 209 containers was performed at INL and then the containers were sent to RF to verify the RTR examinations with VEs. Drum pressure, drum void volume, and headspace gas composition were determined by sampling 212 drums. Sludge containers were analyzed for pH and by infrared spectroscopy to determine the general composition of the sludges.(P015A, P033A)

The information from the TRU Waste Sampling Program was included as AK for the final phase of waste characterization for certification in compliance with the WIPP WAC and WAP.

Content codes were assessed by the INL to characterize and describe the TRU waste inventory. RF waste containers shipped to INL between 1985 and 1989 were reviewed and the assessment was completed in July 1995. Analytical data and process knowledge were evaluated to determine if the waste met the WIPP WAC.(P016A) Succeeding programs, such as the WIPP Experimental Test Program and TRU Waste Characterization Program (TWCP), from 1991 through the end of the 3,100 m^3 Project continued to use RTR and visual confirmation to assess parameters required to verify content codes. RTR characterization provides information on physical form, matrix parameters and weights, waste/packaging items and configurations, and other data necessary to confirm the waste stream description reflected in AK.

The SWEPP was constructed to provide non-destructive examination and certification capabilities for INL-stored TRU waste. In addition to waste certification operations, SWEPP provided waste retrieval, repackaging, and storage capabilities since the facility opened for operations in 1986. From 1985 to 1989, 17,252 containers were examined by RTR and PAN assay in the SWEPP facility during production waste examination. In the same time-frame, confirmatory VE was performed on 81 containers shipped to RF.(P033A)

RTR was used for a number of certification issues including estimating quantities of free liquids and particulates, verifying the content codes, and identifying the presence of pressurized containers. Visual Examination capabilities were developed at the ANL-W facility to facilitate drum certification for WIPP. VE was used to verify the RTR examination, to establish and update the miscertification rate, and to obtain data on waste acceptance criteria that cannot be determined non-destructively.(P033A) The results of RTR and VEs performed from 1997 through 1999 are presented in EDF-363, Description of the SWEPP Certified Waste Sampling Program(P303A) and EDF-2710, Comparison of Real Time Radiography (RTR) and Visual Examination Results of the Stored Waste Examination Pilot Plant (SWEPP) Certified Waste Sampling Program (and its associated database).(P321A) The results of the comparisons were used to develop the original and annual reassessments of the site specific miscertification rates. These data have been incorporated into the AK record.

Originally, the WIPP Experimental Test Program encompassed three waste characterization programs conducted at INL from 1991 to 1996. These programs included the WIPP Waste Characterization Program (WWCP), the TWCP, and the Bin Program. These programs utilized RTR, radioassay, HGAS analysis, VE, and core sampling to support WIPP certification activities at INL. From 1979 to 1999, TRU waste certification and characterization programs were developed at the INL in anticipation of TRU waste disposal at WIPP. The 3,100 m^3 Project was initiated in 1996, which included TRU waste characterization activities for shipment to WIPP under the TWCP. The 3,100 m^3 Project is the name given to the project intended to fulfill the commitment to certify and ship a minimum of 3,100 m^3 of TRU waste to the WIPP by December 31, 2002. The AMWTP began operations in 2004, with the objective of

certifying and shipping an additional 6,000 m^3 of waste to WIPP by the end of December 2005. Since the initial operations began, over 6,000 m^3 have been shipped.

The INL was granted the original certification to ship non-hazardous debris waste in April 1998. Additional certifications for hazardous debris waste and for hazardous homogeneous solids waste or recertification's followed in 1999, 2000, 2001, 2002, 2003, 2004, and 2005.

The history of the major INL and RF TRU waste certification and characterization programs from 1979 through 2002 is summarized in Table 3-9.(P033A)

Various radioisotopes are tracked and monitored at the WIPP site as TRU waste is received for permanent storage. Under the 3,100 m^3 Project, each waste container was radioassayed prior to shipment. The INL PAN Assay System, operating in conjunction with a gamma system (operating in an isotopic-mass-ratio mode), was used to quantify the mass values for the following nuclides: ^{241}Am, ^{238}Pu, ^{239}Pu, ^{240}Pu, ^{241}Pu, ^{233}U, ^{235}U, and ^{238}U.(P248A, P249A)

Initially, the PAN system was operated in conjunction with SGRS. In December 2002 WAGS was placed into operation and the PAN instrument could then provide mass ratios from either SGRS or WAGS to support the PAN measurements. PAN/gamma was certified to ship both debris and sludge waste to the WIPP.

Starting in May 2002 and through the end of the 3,100 m^3 Project, both the SGRS and WAGS systems began to be used in the absolute or quantitative mode. During this time over 2,000 drums were assayed through the SGRS system and 3,000 drums through the WAGS system. The certifications for use included both debris and sludge waste types.

The status and capabilities within the certification program at INL are summarized in EDF-924, INEEL CH TRU Waste Certification Capabilities Implementation.(P243A) Just over 3,100 m^3 of RF wastes were shipped to the WIPP facility from the INL, which represents a total of 14,909 55-gallon drums characterized under the TWCP, certified, and shipped under 12 WSPFs.(P264A) An additional 651 drums were certified during the 3,100 m^3 Project and later shipped by British Nuclear Fuels, Limited (BNFL) to the WIPP facility. These drums are not included in the inventory presented in Appendix B.(U242A)

Table 3-9. Summary of TRU waste certification and characterization programs.

Year	Program Description or Reference
1979	Characterization and Categorization Study of TRU Waste for EG&G
1981	INEEL-Stored TRU Waste Characterization: Non-radiological Hazards Identification, WM-F1-81–015
1982	Content Code Assessments for INEEL Contact-Handled Stored TRU Waste, WM-F1-82-021
1985	TRU Waste Sampling Program: Volume I–Waste Characterization, EGG-WM-6503
	TRU Waste Sampling Program: Volume II–Gas Generation Studies, EGG-WM-6503
	Waste Characterization for INEEL Remote-Handled/Special-Case Stored TRU Waste, WM-PD–85–014
1985–89	SWEPP Operations (Production Mode Certification)
1989	Waste Drum Gas Generation Sampling Program at Rocky Flats, PSD88-037
	Hazardous Waste Constituents of INEEL Contact-Handled Stored TRU Waste, RWMC-EDF-369
	Description of the SWEPP Certified Waste Sampling Program, Rev. 2, RWMC-EDF-363
1990	Chemical Compatibility of Stored TRU Mixed Waste, RWMC–EDF–413
	EPA Hazardous Waste Codes for Transuranic Storage Area Item Description Codes (Rev. 3 in 1996), RWMC–EDF–421
1990–94	WIPP Experimental Test Program
	No Migration Petition Quality Assurance Program Plan (QAPP) and QAPjP SWEPP operation HGAS Drum content examination Gas generation and transport studies Sampling and analytical protocols for sludges developed
1991	Program Plan for Certification of INEEL Contact-Handled Stored TRU Waste, WM-PD-88-011–4
1993	TRU Waste Questionnaire (Non-Rocky Flats Generators)
1994	Waste Generator Questionnaire, RWMC-EDF-676
1995	Chemical Constituents in Transuranic Storage Area Waste (Rev. 1 in 1996), RWMC-EDF-803
	INEEL Code Assessment of the Rocky Flats TRU Waste, INEL-95/028
	Summary of TRU Waste Characterization Programs at the INEEL, INEL-95/0397
1996	3,100 m^3 Project initiated

Table 3-9. (continued).

Year	Program Description or Reference
1997	AK baseline (INEL-96/0280, Rev. 0) issued
	Drum coring begins at ANL-W
1998	INEEL generates original certification to ship non-hazardous debris drums
	EPA certifies WIPP open for receipt and disposal of non-hazardous waste
1999	Non-hazardous debris waste stream 276.003 approved
2000	VE initiated at ANL-W
	CBFO grants INL certification for characterization and transport of hazardous debris
	Hazardous debris waste stream 276.004 Rev. 0 and Rev. 1 approved
	13 shipments
2001	Hazardous debris waste streams INW296.001, INW243.001, INW211.001, and INW247.001 approved
	Hazardous solid waste streams INW216.001 and INW218.001 approved
	121 shipments
2002	Hazardous debris waste streams INW169.001, INW198.001, and INW161.001 approved
	Hazardous solid waste stream INW222.001 approved
	Recovery option (absorbent addition) approved
	375 shipments
	Hazardous debris waste stream INW252.001 approved
	Recovery option (blending) approved
	120 SWBs processed and shipped (51 shipments)
	Total of 3,101.1 m^3 shipped

3.5 TRU Waste Inventory

Originally, the RF TRU waste inventory at INL addressed by INEL-96/0280[U092A] consisted of 23,784 accessible storage drums generated from 1968 through 1988.[C875S] The inventory consisted of a wide variety of materials generated by the operations described above. Waste materials range from relatively homogenous materials such as sludge from waste treatment operations to extremely heterogeneous wastes such as combustibles, which consist of a wide spectrum of materials generated from numerous areas. The waste is stored at the RWMC Transuranic Storage Area (TSA) at the INL.

The TRU waste inventory addressed in this document for the AMWTP consists of approximately 112,473 containers including the accessibly stored drums not previously characterized and shipped under the 3,100 m^3 Project, the accessibly stored boxed waste, and the retrievably stored drummed and boxed waste. It includes the drums in retrievable storage (e.g., drums on Pad 1, Cells 1 and 2) prior to maintaining inventory lists in 1973 (that were historically identified as IDC 999) and the estimated 19,000 drums retrieved from Pits 11 and 12 that were generated prior to 1971 (historically identified as IDC 000). The waste was originally stored at the AMWTP in the storage modules as accessibly stored waste and in the TSA-RE as retrievably stored waste. A map of the RWMC is provided in the AK source document files.[P209A]

As described in Section 3.3.2, RF wastes were segregated by IDC. During the review of AK, similar IDCs were combined to create the waste groups presented in Sections 5.0 through 28.0. These sections describe the composition, generation, packaging, and characterization for each waste or waste group.

3.5.1 Waste Retrieved from the Subsurface Disposal Area

Radionuclide-contaminated waste materials were generated during the fabrication, assembly, and processing of nuclear weapon components in the DOE weapons production complex at RF and shipped to the INL Subsurface Disposal Area (SDA) for disposal from 1954 to 1971. Waste management practices during the 1950s and early 1960s were often based on the program or processes specific to the building within which the wastes were generated. RF used a categorization scheme to identify waste types from 1954 to 1971 using roman numeral designators as follows:

- Type I—Combustibles (i.e., paper, rags, and wood), also defined as housekeeping wastes in some documents.
- Type II—Filter paper, including fiber/fibrous pads (containing asbestos), and non-HEPA filters.
- Type III—Filters and filter media, defined as including CWS and HEPA filters from gloveboxes and building ventilation systems. CWS filters refers to the brand Chemical Warfare Service filters that were used in building ventilation systems.

- Type IV—Inorganic sludge, primarily the series of sludge produced by the Liquid Waste Treatment Plant (Building 774).
- Type V—Noncombustibles such as glass, scrap metal, firebrick, spent equipment, wire, electric motors, piping, sheet metal, glovebox material, and tantalum molds.
- Type VI—Contaminated organics (55-gallon oil drums).

The waste designators included in the categorization scheme described here, as well as other types of designators are shown on load lists and in AK source documents and are included in the Waste Information and Location Database (WILD). The WILD is the most recent compilation of shipping records data for information and inventories of waste buried in the SDA. RF additionally used other waste designators (e.g., letter, word, or acronyms), which have been identified and assigned to the roman numeral designations through discrepancy resolution.(U115A, P443A)

Waste drums initially buried in Pits 11 and 12 of the TSA recorded in the WILD were retrieved during the Initial Drum Retrieval (IDR) project. Some of these waste drums were also recorded in four Transuranic Waste Management Information System (TWMIS) tables:

1. HCWDB (based on the cargo container [CC] number)
2. Pit 11 retrieved drums overpacked in 83-gallon in HCWDB (with prefix IW00000xxxx, xxxx being the retrieval sequence)
3. CARGO (by CC number and data from each drum [if legible at the time of recovery/over-pack])
4. MIII_BIN (by bin number and data for each drum).

The data recorded in the TWMIS tables were evaluated for both the cargo containers and bins to determine the probability of the presence of containers of roaster oxide (RO), the number of each type/size of over-packed drums in each over-pack container, and other parameters requested. Additionally, RF load lists were evaluated during assignment of historical drum data to the inner containers.(C510A, U127A, C618A)

Much of the waste shipped during the 1954 to 1971 timeframe may contain TRU isotopes with less than 100 nanocuries per gram activity range. Based on the shipping records as entered into the WILD, approximately 78 percent of the waste volume shipped to the Idaho National Engineering Environmental Laboratory (INEEL) was generated in the RF plutonium processing and production facilities, and is assumed to be TRU contaminated. The principal radionuclides contained in RF waste are those identified in WG Pu (e.g., ^{238}Pu, ^{239}Pu, ^{240}Pu, ^{241}Pu, and ^{242}Pu), EU, and DU. Due to ^{241}Pu decay and ingrowth of ^{241}Am, this radioisotope is expected in any RF waste containing plutonium. Americium-241 can be detected at considerably higher relative activities than would be expected from ingrowth alone in wastes containing chemically separated materials from the purification of plutonium. Other radionuclides may also be found in some RF wastes generated from R&D, analytical processing, tracer studies, and special order work, such as ^{244}Cm, ^{232}Th, ^{236}U, ^{233}U, ^{137}Cs, ^{90}Sr and ^{237}Np.(P443A)

4.0 REFERENCES

The AK source documents consist of published documentation, unpublished data, correspondence, and discrepancy reports. Published documentation consists primarily of controlled documents, previously controlled documents, and procedures, in addition to formal reports, studies, and databases. Unpublished data include draft documents, analytical data packages, log books, and inventory lists, in addition to internal reports, studies, and databases. Correspondence includes internal and external letters, memos, directives, telecommunication records, meeting minutes, and personnel interview summaries. A discrepancy report is a documented resolution of an AK discrepancy and typically consists of a letter to file with supporting documentation, if applicable.

Appendix A lists and describes the AK source references used by this program. The references are categorized and grouped by "C," "D," "P," and "U" sources, which coincide with the correspondence, discrepancy report, published, and unpublished information, respectively.

5.0 SOILS

The soils waste group consists of dry dirt or soil generated from non-routine operations (e.g., construction, decontamination and decommissioning [D&D], cleanup of spills, leaks). The IDCs and dates of generation for the soils waste in the AMWTP inventory are presented in Table 5-1.(P090A, P367A, P368A, P370A, U059A, U069A, U092, U128A)

Table 5-1. Soil waste in the AMWTP inventory.

IDC	Title	Dates of Generation[a]
090	Dirt	November 1971–February 1972
697	Dirt	November 1972–June 1988
990	Dirt	February 1972–November 1975

a. Dates of generation are based on available shipping papers and may not reflect the actual inventory at INL due to incomplete records for waste received prior to 1973.

Item Description Codes 090 and 990—Dirt: Waste consists of dry dirt or soil generated from cleanup of spills, leaks, etc., and includes evaporator pond sludge and limited amounts of combustibles such as coveralls and gloves. Limited amounts of waste may be damp or wet. IDC 090 (prior to early 1972) and IDC 990 were generated from similar processes and locations. Dirt or soil wastes were also included in containers of IDC 374 (reference IDC 697).

Item Description Code 697—Dirt: The AMWTP has assigned IDC 697 (374A) to individual containers of IDC 374 that are greater than 50 percent by volume soil/gravel to address the database issues of two different WMCs associated with one IDC.(P024A)

Potential waste material parameters (WMPs) for dirt waste containers, including typical packaging materials, are described in Table 5-2. RF waste management and inspection protocol allowed containers of wastes to contain up to 10 percent of an IDC other than that assigned to the container.(P016A) None of the dirt wastes were characterized by the 3,100 m^3 Project, and no RTR data were generated.(P321A)

Table 5-2. Potential waste material parameters for dirt waste containers.

Potential Waste Material Parameters	Examples
Steel (packaging materials)	55-gallon drum
Plastics (packaging materials)	90-mil drum liner, O-ring bag, drum bag, filtered drum bag
Cellulosics	Cardboard liner, Fibre-Paks
Other Inorganic Materials	Vermiculite, Oil-Dri®, Aquaset®, concrete, stone
Organic Matrix	Organic binder portion of blacktop
Combustibles	Coveralls, gloves, paper, rags
Plastic (waste materials)	Drum stub bags, Nalgene bottles, polyethylene bags
Soils/Gravel	Dirt, sand, and soil

5.1 Waste Generation

The majority of the soil waste was generated from cleanup operations conducted at the Production Support Laboratory (Building 559), Aqueous Waste Treatment (Building 774), and at other plant areas by personnel of the Size Reduction Facility (Building 776). None of the containers of waste are identified for specific occurrences but are assumed to have been generated in relation to the general site processes conducted during the time the waste was generated. The site processes and the details of the evaporator pond operations are presented in Section 3.0.

5.2 Waste Packaging

5.2.1 Drums

Dirt was packaged in drums by either placing it directly into a prepared 55-gallon drum or by placing it in single or double polyethylene bags that were closed by sealing with tape and then placed in a prepared 55-gallon drum.

To prepare 55-gallon drums for shipment, several combinations of bags and liners were used depending on waste packaging requirements at the time. Until 1972, waste drums were lined with one or two polyethylene drum bags and cardboard liners may have been used to line the inner drum bag. In 1972, the use of 90-mil rigid polyethylene liners began, but individual drums may or may not include them.(P024A) The rigid liner was placed in each drum and lined with one polyethylene round bottom drum liner or two polyethylene drum bags.(P008A, P012A, P024A, P063A, P064A) A fiberboard liner and discs may also have been used between the waste and the drum liners.(P012A) When a drum was full, the drum liners were twisted and taped closed, the lid was secured with a bolted ring, and a tamper indicating device was attached to the drum.(P001A, P012A, P024A) Other types of closure might also be encountered including, but not limited to, twisted and tied, plastic tie, or folded and taped. Based on previous VEs of RF containers, drums may also exhibit a filtered bag, drum stub bag, or no bag packaging.

While several combinations of drum bags, poly bags, and O-ring bags may have been used to package the wastes, any combination of these plastic bags, provided that four layers of containment were not exceeded, did not impact acceptability of the drums; however, no more than two of these layers may be inner bags.(P024A)

After drums were inspected, one to two quarts of absorbent material (e.g., Oil-Dri®) may have been placed on top of the outer, sealed polyethylene drum bag. During RTR examinations of waste containers, quantities of absorbent were identified that varied significantly from expected quantities, and some drums contained no absorbent. In addition, Oil-Dri® and vermiculite may have been used in some drums outside the expected time periods, or other absorbent materials may have been used.(P221A)

5.2.2 Boxes

There is no evidence that IDC 090 or 990 wastes were packaged in boxes.(P024A)

5.3 Waste Characterization

Soil wastes were characterized based on knowledge of the material and knowledge of the processes generating the waste. This waste is at least 50 percent (by volume) inorganic particulates, and is classified as a homogeneous waste.(P141A) Potential hazardous chemical constituents assigned to this group of IDCs by AK documentation are identified in Table 5-3.

Table 5-3. Potential hazardous chemical constituents of soil wastes.

IDC	Chemical Constituents(P016A, P023A, P307A, P368A)
090	None
697[a]	1,1,1-trichloroethane, 1,1,2-trichloro-1,2,2-trifluoroethane, carbon tetrachloride, methylene chloride
990	None

a. IDC 697 (374A) was created by AMWTP to allow segregation of containers that were assigned IDC 374 by RF but contain greater than 50 percent by volume soil. In addition, the IDC title for 374 was modified to reflect debris.

5.3.1 Radionuclides

Information about radionuclides common to all RF wastes is presented in Section 3.0 of this document. The radionuclides potentially contained in the soil wastes, and radioassay interferences, are as follows:(P024A)

- The radionuclides of concern for the RF soil wastes (IDCs 090, 697, and 990) are ^{238}Pu, ^{239}Pu, ^{240}Pu, ^{242}Pu, ^{233}U, ^{234}U, ^{238}U, and ^{241}Am.
- The two most prevalent TRU radionuclides in soil wastes are ^{239}Pu and ^{240}Pu.
- Uranium-235 and ^{238}U may also be present in some soil waste containers depending on the relative mixture of EU and DU in the waste.
- The remaining WIPP-tracked radionuclides, ^{137}Cs and ^{90}Sr, are not expected to be present in measurable quantities in soil wastes.

Due to the potential variability of the waste materials present in containers of soil waste (IDCs 090, 697, and 990), specific identification of the radionuclide form, particle size, and distribution; interfering waste contaminants; and physical matrix parameters has not been determined. The only exception to this is the assumption that hydrogen is present due to degradation of the plastic packaging materials.

6.0 SALTS

Pyrochemical and evaporator salts waste are addressed in this section under sub-sections 6.1 and 6.2 respectively.

6.1 Pyrochemical Salts

This waste group includes spent salts generated by production and experimental pyrochemical operations used to recover and purify plutonium metal. The salts were generated by MSE, DOR, and electrorefining processes in Buildings 371, 776, and 779.(P038A) Historic IDC descriptions and dates of generation for this waste in the AMWTP inventory are presented by IDC in Table 6-1.(P090A, P367A, P368A, P370A, U059A, U069A, U092, U128A)

Table 6-1. Pyrochemical salt waste in the AMWTP inventory.

IDC	Title	Dates of Generation[a]
409	Molten Salt—30% Unpulverized(P038A)	June 1976–January 1986
410	Molten Salt—30% Pulverized	November 1976–April 1980
411	Electrorefining Salt(P012A) Electrorefining Salt, Final Disposition(P001A)	April 1974–August 1986
412	Gibson Salts(P012A)	August 1980
414	Direct Oxide Reduction Salt(P012A) Direct Oxide Reduction Salt—Unoxidized Ca(P001A)	May 1982–August 1985

a. Dates of generation are based on available shipping papers and may not reflect the actual inventory at INL due to incomplete records for waste received prior to 1973.

Item Description Code 409—Molten Salt - 30% Unpulverized: This waste consists of spent salt generated by the MSE process used to extract americium contamination from plutonium metal. The MSE process that generated IDC 409 used 30 mole percent of magnesium chloride salt during the extraction. The spent salt is composed primarily of sodium chloride, potassium chloride, residual magnesium chloride, entrained magnesium metal, and various plutonium and americium compounds. IDC 409 consists of unpulverized fused chunks of salt.(P038A, P139A)

Item Description Code 410—Molten Salt - 30% Pulverized: This waste consists of spent salt generated by the MSE process used to extract americium contamination from plutonium metal as described for IDC 409. IDC 410 consists of pulverized fused chunks of salt.(P038A, P139A)

Item Description Code 411—Electrorefining Salt: This waste consists of spent salt generated by electrorefining operations used to purify plutonium metal that did not meet foundry specifications. The salt is composed primarily of sodium chloride, potassium chloride, magnesium chloride, entrained magnesium metal, and various plutonium compounds.(P139A) The salt is a mixture of chunks, granules, and fine particles.(P038A) This salt may also contain sodium and potassium metal produced during electrolysis of the molten salt mixture.(P052A, P139A)

Item Description Code 412—Gibson Salts: This waste consists of a single drum of spent salt generated by an experimental pyroredox process for extraction of impurities from plutonium metal. The salt is composed primarily of sodium chloride, potassium chloride, calcium chloride, zinc chloride, entrained zinc and calcium metal, and various plutonium and americium compounds.(P139A) The dry, fused salt chunks may also contain sodium and potassium metal resulting from the reduction of sodium chloride and magnesium chloride by the excess calcium metal.(P038A, P139A)

Item Description Code 414—Direct Oxide Reduction Salt: This waste consists of spent salt generated by the DOR process used to reduce plutonium oxide to plutonium metal. The salt is composed primarily of calcium chloride, calcium oxide, entrained calcium metal, calcium metal buttons, and various plutonium compounds.(P139A) The salt is in the form of chunks and fines.(P038A)

The potential WMPs for pyrochemical salt waste containers, including packaging materials, are listed in Table 6-2. Waste management and inspection protocol at RF allowed containers of waste to contain up to 10 percent of IDC wastes other than that assigned to the container.(P016A) None of the pyrochemical salt wastes were characterized by the 3,100 m^3 Project, and no RTR data were generated.(P368A)

Table 6-2. Potential waste material parameters for pyrochemical salt waste containers.

Potential Waste Material Parameters	Examples
Steel (packaging materials)	55-gallon drum
Plastics (packaging materials)	90-mil drum liner, O-ring bag, drum bag, filtered drum bag
Other Inorganic Materials	Pyrochemical salts, vermiculite, Oil-Dri®, Aquaset® [a]
Other Metals	Items such as lead sheets or lead tape
Iron-based Metals/Alloys	Items such as metal cans
Plastic (waste parameters)	Drum stub bags, Nalgene bottles, polyethylene bags

a. The WMP for pyrochemical salts was previously identified by AMWTP as Inorganic Matrix; however, these wastes are not cemented and do not match the description of Inorganic Matrix. Therefore, the WMP for pyrochemical salts was changed to Other Inorganic Materials which is consistent with the WMP assigned by RFETS to pyrochemical salts shipped directly from RFETS to WIPP. However, some containers of pyrochemical salts were examined by RTR prior to revising the WMP in RPT-TRUW-05. (P399A, P435S, P436A)

6.1.1 Waste Generation

Pyrochemical salts waste were generated by molten salt processes associated with plutonium recovery and purification operations in Buildings 371, 776, and 779. The pyrochemical waste consists of spent salts from the MSE, electrorefining, and DOR operations as described in Section 3.0. Electrorefining was conducted in Buildings 371, 776, and 779. The MSE and DOR processes were performed in Building 776. Building 779 supported technology development and experimental scale operations for the pyrochemical processes.(P038A) Process flow diagrams for pyrochemical waste generating processes are provided in archived WSRIC information.(P062A, P078A, P081A)

6.1.1.1 Molten Salt Extraction

The MSE technology was used to remove americium from salvaged plutonium metal. The process that generated IDC 409 was primarily conducted in the twelve stationary furnaces in Building 776; however, these salts were also generated by experimental operations in Building 779.(P038A)

Plutonium metal containing unacceptable levels of americium was combined with an equimolar mixture of sodium chloride and potassium chloride with magnesium chloride. The metal and salts were placed in a tantalum crucible. The crucible and contents were placed in a furnace and heated until the mixture was molten. The molten salt and metals were then mixed by stirring. While in the molten state, the magnesium chloride oxidized most of the americium and some of the plutonium. The oxidized actinides migrated from the metal to the salt phase. As the mixture cooled, the extremely dense plutonium metal separated from the salt and settled at the bottom of the crucible. The metal and salt were removed from the crucible and separated. Depending on the purity of the plutonium, it was either sent to the foundry or it was further purified in the electrorefining process.(P139A) The spent salt (IDC 409) was sent to Building 771 for plutonium assay. Salt above the EDL was stored on site for recovery. Drums of waste salt below the EDL were sent to Building 776 for inspection and sealing.(P024A)

6.1.1.2 Electrorefining

Electrorefining was used to purify plutonium metal from MSE and other recovery operations that did not meet foundry specifications. The processes that generated IDC 411 were conducted in the tilt-pour furnaces in Building 371 and the stationary furnaces in Buildings 776 and 779.(P038A)

Non-specification plutonium metal, cast as an anode, was combined with magnesium chloride and an equimolar mixture of sodium chloride and potassium chloride in a magnesium oxide crucible. The crucible and contents were heated in a furnace until the mixture was molten. A cathode and an anode/stirrer were then lowered into the molten mixture. A current was applied to the anode/stirrer which flowed through the mixture to the cathode. Plutonium ions migrated through the salt to the cathode and were reduced to purified metal. After the cathode and anode were removed, the crucible was allowed to cool before it was removed from the furnace. The crucible was broken and the purified plutonium metal was separated from the salt and anode heel. The plutonium was analyzed then sent to the foundry for production.(P139A) The spent salt was sent to Building 771 for plutonium assay. Salt above the EDL was stored on site for recovery. Drums of waste salt below the EDL were sent to Building 776 for inspection and sealing.(P024A)

6.1.1.3 Direct Oxide Reduction

The DOR technology was developed to reduce plutonium oxide to metal. The process that generated IDC 414 was conducted on a production scale in Building 776 and development work was done in Building 779.(P038A)

Calcined plutonium oxide was placed into a magnesium-oxide crucible with calcium chloride and calcium metal. The crucible and contents were placed in a furnace and heated until the contents were molten. The molten mixture was stirred until the reduction was complete. After the mixture cooled, the contents were removed and the plutonium metal was separated from the salt phase. Depending on the purity of the plutonium, it was either sent to the foundry or it was further purified in the electrorefining process.(P139A) The spent salt was sent to the in-line can counter for plutonium assay. Salt above the EDL was stored for recovery. Drums of waste salt below the EDL were sent to Building 776 for inspection and sealing.(P024A)

6.1.1.4 Pyroredox

Gibson salts (IDC 412) were generated during a pyroredox process development effort in Building 779 in the late 1970s.(P038A, P052A) In general, the pyroredox process was a three-step process to purify plutonium. The first step involved the oxidation of impure plutonium in a calcium chloride/potassium chloride molten salt matrix using zinc chloride as the oxidant. Plutonium metal was reduced out of the resulting plutonium rich salt using calcium metal. The remaining salt was assigned IDC 412.

6.1.2 Waste Packaging

6.1.2.1 Drums

A variety of container and liner configurations were used to package pyrochemical wastes. In general, the salts were placed directly into stainless steel cans or produce cans with rolled seam lids.(P001A, P038A) Electrorefining salts were also placed in one-gallon paint cans wrapped in lead. DOR salts may be contained in four-liter Nalgene bottles. The individual packages were assayed by the in-line can counter to determine if the salt was above or below the EDL.(P001A) The container was then double-bagged and removed from the glovebox line or placed in another stainless steel can that was double bagged and removed from the glovebox.(P012A) Packages removed from the glovebox were either placed into another package such as lead-lined Fibre-Paks, stainless steel containers, or process residue containers (clamshells).(P015A, P024A, U061A) The packages may also have been placed directly into prepared drums.(P012A)

Depending on waste packaging requirements at the time, several combinations of bags and liners were used to prepare 55-gallon drums for shipment. A 90-mil rigid polyethylene liner was placed in each drum and lined with one polyethylene round bottom drum liner or two polyethylene drum bags. A PVC O-ring bag and a polyethylene bag were used if the drum was attached to the glovebox.(P016A) A fiberboard liner and discs may also have been used between the waste packages and the drum liners. When a drum was full, the drum liners were twisted and taped closed, the lid was secured with a bolted ring, and a tamper indicating device was attached to the drum.(P012A, P016A, P024A)

Waste management practices for RF indicate twist and tape method for bag closure. However, a stub bag that is a heat-sealed filtered bag may be found in some containers that were

visually examined at ANL-W as part of a previous VE program. RTR/VE also identified a filtered bag in a RF drum that was not visually examined by ANL-W.(P445A)

After drums were inspected, one to two quarts of absorbent material (e.g., Oil-Dri®) was placed on top of the outer, sealed polyethylene drum bag. This procedure was changed in February 1982 when vermiculite was used to fill the space between the outer, sealed polyethylene drum bag and the top of the 90-mil rigid liner. The quantity of vermiculite varied from 3–12 pounds according to the amount of waste contained in each drum.(P024A) During RTR examinations of RF waste containers, quantities of absorbent were identified that varied significantly from expected quantities, and some drums contained no absorbent. In addition, Oil-Dri® and vermiculite may have been used in some drums outside the expected time periods, or other absorbent materials may have been used.(P221A)

6.1.2.2 Boxes

The AMWTP container inventory does not include any boxes of pyrochemical salt waste.(C289A, P024A)

6.1.3 Waste Characterization

Pyrochemical salts wastes were characterized based on knowledge of the material, and the processes generating the waste, VE, sampling and analysis, and HGAS analysis. This waste group contains at least 50 percent (by volume) salts, and are classified as homogeneous solid wastes.(P141A) Potential hazardous chemical constituents assigned to this group of IDCs by AK documentation are identified in Table 6-3. There is no evidence of evaporator salt wastes with PCBs at concentrations greater than 50 parts per million in the AMWTP inventory. Items that contain PCBs (e.g., light ballasts) are not expected to be present in the majority of evaporator salt containers.(P024A, P393A)

Table 6-3. Potential hazardous chemical constituents of pyrochemical salt wastes.

IDC	Chemical Constituents(P015A, P016A, P024A, P052A, P368A)
409	None
410	None
411	None
412	None
414	None

6.1.3.1 Radionuclides

The radionuclides potentially contained in the pyrochemical salts waste and radioassay interferences are described in the following sections. Information about radionuclides common to all RF waste is presented in Section 3.0.

- The radionuclides of concern for RF pyrochemical salts wastes (IDCs 409, 410, 411, 412, and 414) are ^{238}Pu, ^{239}Pu, ^{240}Pu, ^{242}Pu, ^{233}U, ^{234}U, ^{238}U, and ^{241}Am.(P024A, P368A)
- The two most prevalent radionuclides in pyrochemical salts wastes are ^{239}Pu and ^{240}Pu.(P024A, P368A)
- Uranium-235 and ^{238}U may also be present in some soil waste containers depending on the relative mixture of EU and DU in the waste.(P024A, P368A)
- The remaining WIPP-tracked radionuclides, ^{137}Cs and ^{90}Sr, are not expected to be present in measurable quantities.(P024A, P368A)

Aqueous waste treatment operations in Building 774 received wastes from throughout plant site, including processes that generated low-level and non-radioactive liquid wastes. For this reason, wastes generated during treatment operations may contain any of the radionuclides used at the plant.

The MSE process removed the ^{241}Am decay product from site-return metal and other non-specification plutonium.(P163A) Mass balance calculations for MSE residues (IDC 409) estimated these salts contain 226,000 parts per million plutonium, 46,400 parts per million americium, and 200 parts per million uranium.(P175A) The composition of site-return metal and the isotopic make-up of WG Pu and EU are provided in Section 3.0.

The electrorefining process purified plutonium metal from MSE or other operations for use in the foundry.(P163A) Mass balance calculations for electrorefining residues (IDC 411) estimate these salts contain 100,000 parts per million plutonium, 66.5 parts per million americium, and 617 parts per million uranium.(P175A)

The DOR process produced plutonium metal directly from foundry generated plutonium oxide; therefore, it will only contain impurity levels of americium and uranium.(P163A) Mass balance calculations for DOR residues (IDC 414) estimate these salts contain 4,540 parts per million plutonium, 10.1 parts per million americium, and 1.1 parts per million uranium.(P175A)

The experimental pyroredox process was for purification of plutonium metal from MSE residues or other sources of impure plutonium metal. Since MSE residue salts were one of the possible feed sources to this process, the Gibson salts (IDC 412) and magnesium/zinc alloy (IDC 416) may contain plutonium, americium, and uranium.(C182A) The levels of americium and uranium are possibly present as impurities only. In addition, impurity levels of neptunium may also be present.(P035A)

Radioassay interferences may include residual magnesium chloride and magnesium oxide (from crucibles), and entrained magnesium metal.(C186A, C187A, P139A, P175A) Small quantities of aluminum may also be present.(P035A)

6.2 Evaporator Salts

This waste group includes spent salts generated by the Building 774 evaporator system. Historic IDC descriptions and dates of generation for this waste in the AMWTP inventory are presented by IDC in Table 6-4.(P090A, P367A, P368A, P370A, U059A, U069A, U092, U128A)

Table 6-4. Evaporator salt waste in the AMWTP inventory.

IDC	Title	Dates of Generation
005	Evaporator Salts	November 1971 – September 1975[a]
745[b]	Pits 11 and 12 Evaporator Salts[b]	June 1968 – September 1972

a. Dates of generation do not include waste retrieved from Pits 11 and 12 (i.e., wastes identified by the ID numbers 745).

b. Prior to 1971, these wastes were not identified by an IDC; therefore, AMWTP has assigned IDC 745 based on the drum prefix assigned by RF for evaporator salts generated in Building 774.

Item Description Code 005—Evaporator Salts: This waste consists of salt residues generated by the Building 774 evaporator system from concentrating and drying liquid waste from the solar evaporation ponds. The approximate chemical makeup of the salt is 60 percent sodium nitrate, 30 percent potassium nitrate, and 10 percent miscellaneous. The majority of salt drums in storage at the INL should be contaminated with less than 10 nanocuries per gram of TRU.(P024A)

Item Description Code 745—Pits 11 & 12 Evaporator Salts: This waste consists of salt residues generated from the same process as IDC 005 that were shipped to INL prior to October 1972 and placed into Pits 11 and 12. The waste was subsequently retrieved from the Pits and placed into the TSA-RE prior to 1979. IDC 745 was assigned by AMWTP because the majority of the waste was generated prior to the use of IDCs at RF.

Potential waste material parameters for evaporator salt waste containers, including typical packaging materials, are described in Table 6-5. RF waste management and inspection protocol allowed containers of waste to contain up to 10 percent of IDC wastes other than that assigned to the container.(P016A, P024A) Evaporator salts were not a candidate waste stream for characterization by the 3,100 m^3 Project, and no RTR data were generated.(P321A)

Table 6-5. Potential waste material parameters for evaporator salt waste containers.

Potential Waste Material Parameters	Examples
Steel (packaging materials)	55-gallon drum
Plastics (packaging materials)	90-mil drum liner, O-ring bag, drum bag, filtered drum bag
Other Inorganic Materials	Evaporator salts, portland cement, vermiculite, Oil-Dri®, Aquaset® [a]
Other Metals	Items such as lead sheets or lead tape
Iron-based Metals/Alloys	Items such as metal cans

Potential Waste Material Parameters	Examples
Combustibles	Crepe paper bags, paper, rags
Plastics (waste materials)	Drum stub bags, Nalgene bottles, polyethylene bags

a. The WMP for evaporator salts was previously identified by AMWTP as Inorganic Matrix; however, these wastes are not cemented and do not match the description of Inorganic Matrix. Therefore, the WMP for evaporator salts was changed to Other Inorganic Materials. However, some containers of evaporator salts were examined by RTR prior to revising the WMP in RPT-TRUW-05 (P399A).

6.2.1 Waste Generation

Around 1965, an evaporator was installed in Building 774 to treat liquids from the second stage treatment process and from the solar ponds. The concentrate from the evaporator (salt brine) was introduced into a steam-heated, double-drum drier, which produced a salt waste. The Building 774 evaporator was removed in 1979.

Liquid effluent from the second-stage treatment process and all other plant-generated liquid wastes not requiring treatment were concentrated in solar evaporation ponds. The liquid was then pumped from the ponds to the evaporators in Building 774, concentrated and dried, forming a salt residue. Portland cement was added to damp or wet salt when free liquids were present.(P024A)

6.2.2 Waste Packaging

6.2.2.1 Drums

A variety of container and liner configurations were used to package evaporator salt wastes. In general, the salts were placed directly into prepared drums. During 1972, approximately 1,000 drums were lined with a plastic bag and a crepe paper bag. After this time, drums were lined with one or two plastic bags.(P024A) When a drum was full, the drum liners were twisted and taped closed, the lid was secured with a bolted ring, and a tamper indicating device was attached to the drum.(P012A, P016A, P024A)

After drums were inspected, one to two quarts of absorbent material (Oil-Dri®) was placed on top of the outer, sealed polyethylene drum bag. During RTR examinations of containers of other RF IDCs, quantities of absorbent were identified that varied significantly from expected quantities, or absorbent was identified outside of expected timeframes. In addition, some containers contained an absorbent other than that expected or contained no absorbent at all. These absorbent configurations are atypical but do not impact WMC or HWN assignments.

6.2.2.2 Boxes

The AMWTP container inventory includes one 4 × 4 × 7-foot box of evaporator salt waste. The box was lined with one or two plastic bags and may have included absorbent material.(P024A)

6.2.3 Waste Characterization

Evaporator salt wastes were characterized based on knowledge of the material, knowledge of the processes generating the waste, VE, sampling and analysis, and HGAS analysis. Evaporator salts (IDC 005) contain at least 50 percent (by volume) salts, and are classified as homogeneous solid wastes.(P141A) Potential hazardous chemical constituents assigned to this group of IDCs by AK documentation are identified in Table 6-6. There is no evidence of evaporator salt wastes with PCBs at concentrations greater than 50 parts per million in the AMWTP inventory. Items that contain PCBs (e.g., light ballasts) are not expected to be present in the majority of evaporator salt containers.(P024A, P393A)

Table 6-6. Potential hazardous chemical constituents of evaporator salt wastes.

IDC	Chemical Constituents(P024A)
005	TBD
745	TBD

6.2.3.1 Radionuclides

The radionuclides potentially contained in the evaporator salt waste, and radioassay interferences, are described in the following sections. Information about radionuclides common to all RF wastes is presented in Section 3.0.

- The radionuclides of concern for IDC 005 are ^{238}Pu, ^{239}Pu, ^{240}Pu, ^{242}Pu, ^{233}U, ^{234}U, ^{238}U, and ^{241}Am.
- The two most prevalent radionuclides in evaporator salt wastes can be any combination of ^{239}Pu and ^{240}Pu.
- Uranium-235 and ^{238}U may also be present in some soil waste containers depending on the relative mixture of EU and DU in the waste.(P240A)
- The remaining WIPP-tracked radionuclides, ^{137}Cs and ^{90}Sr, are not expected to be present in measurable quantities.

Aqueous waste treatment operations in Building 774 received wastes from throughout plant site, including processes that generated low-level and non-radioactive liquid wastes. For this reason, wastes generated during treatment operations may contain any of the radionuclides used at the plant.

Radioassay interferences may include residual magnesium chloride and magnesium oxide (from crucibles), and entrained magnesium metal.(P139A, C186A, C187A, P175A) Small quantities of aluminum may also be present.(P035A)

7.0 RESINS

This waste group consists of spent anion and cation exchange resins that were used in plutonium and americium purification and recovery operations in Building 771.(P012A) Limited amounts of ion exchange resin were also generated from R&D and laboratory operations.(P024A) Historic IDC descriptions and dates of generation for this waste in the AMWTP inventory are presented by IDC in Table 7-1.(P090A, P367A, P368A, P370A, U059A, U069A, U092, U128A)

Table 7-1. Resin waste in the AMWTP inventory.

IDC	Title	Dates of Generation[a]
430	Unleached Ion Column Resin	March 1972–July 1972
431	Leached Resin	December 1971–June 1972
432	Resin, Leached and Cemented(P012A) Cemented Resin(P001A)	December 1971–August 1986
822	Cemented Resins(P012A)	January 1986–February 1987

a. Dates of generation are based on available shipping papers and may not reflect the actual inventory at INL due to incomplete records for waste received prior to 1973.

Item Description Code 430—Unleached Ion Column Resin: This waste consists of anionic and cationic exchange resins used in the purification and recovery of plutonium and americium, respectively. The resins were polystyrene divinylbenzene copolymers. The resins were not leached with nitric acid and are uncemented.(P024A) After 1972, the resins were leached, cemented, and assigned IDC 432 and after August 1986 the cemented resins were assigned to IDC 806.(D060A)

Item Description Code 431—Leached Resin: This waste consists of anionic and cationic exchange resins used in the purification and recovery of plutonium and americium, respectively. The resins were polystyrene divinylbenzene copolymers. The resins were leached with nitric acid and then rinsed and are uncemented. This was formerly IDC 430 resin that was leached with water. It is believed that these resins were contaminated with above-discard amounts of plutonium and were leached to recover the plutonium.(P024A) After 1972, leached resins were cemented and assigned IDC 432.

Item Description Code 432—Resin, Leached and Cemented: This waste consists of leached, spent anion and cation exchange resins that were cemented by mixing Portland cement, water, and washed resin into a slurry. The slurry was poured into a polyethylene bottle or, in some cases, into a metal can.(U011A, P015A, P024A) After August 1986, this IDC was no longer used. The resin was cemented and assigned to either IDC 822 (until February 19, 1987) or IDC 806.(D060A)

Item Description Code 822—Cemented Resins: This waste consists of washed spent anion and cation exchange resins that were coated with cement with a mixer in a metal bowl. The resin was slurried with Portland cement and water. The slurried resin was poured into a polyethylene residue container mold and allowed to solidify.(P043A, P098A) IDC 822 replaced IDC 432 in the mid-1980s. The change in IDCs is a reflection of a change in the cementation

process, not a change in the processes generating the resins. IDC 806 was used after February 19, 1987 for both 432 and 822.[D060A] Additional information is provided in Section 7.1.

Potential waste material parameters for resin waste containers, including typical packaging materials, are described in Table 7-2. RF waste management and inspection protocol allowed containers of waste to contain up to 10 percent of IDC wastes other than that assigned to the container.[P016A] A variety of items including a bag of dry Portland cement, white powder in a one-gallon paint can, a cloth towel, tools, a grease pencil, and paper were identified in resin waste containers during VE.[P015A, P368A, U011A] In addition, at least one container of IDC 432 waste was identified with greater than one inch of residual liquid.

Table 7-2. Potential waste material parameters for resin waste containers.

Potential Waste Material Parameter	Examples
Steel (packaging materials)	55-gallon drum
Plastics (packaging materials)	90-mil drum liner, O-ring bag, drum bag
Iron-based metals/alloys	Metal waste items of iron, galvanized metal, carbon steel
Other metals	Stainless steel pieces, metal cans
Other inorganic materials	Glass, absorbents (e.g., Vermiculite, Oil-Dri®), cement
Cellulosics	Cardboard liner, Fibre-Paks, wipes, tape
Plastics (waste materials)	Small polyethylene bags, bottles, tubing, uncemented resin
Organic matrix	Solidified cemented organic resin

7.1 Waste Generation

Ion exchange resins were generated during recovery, purification, laboratory, and R&D activities associated with plutonium and americium recovery operations. Ion exchange processes were important to the plutonium purification processes at RF. The resin used in the process was replaced when the efficiency was reduced through repeated use. The ion exchange resin used at RF was generally small polystyrene plastic beads in which long-chain organic compounds with an activated group are imbedded.[P052A, P061A]

In Building 771, the americium and plutonium solution from the initial cation exchange purification was trickled through chloride form anion exchange resin columns. A strong ammonium thiocyanate solution was trickled through the resin to remove cerium, yttrium, and other rare earth metals. Residual ammonium thiocyanate was removed using vacuum. The americium and plutonium were removed with a hydrochloric acid solution. Impurities such as chromium, nickel, lead, and iron remained on the resin. The anion exchange resin was replaced after each use.[P113A]

The laboratories located in Buildings 559 and 779 generated small amounts of anion exchange resins. Two processes in Building 559 used anion exchange to prepare plutonium samples for isotopic analysis. Building 779 evaluated ion exchange resins for efficiency in

support of Building 771 plutonium recovery operations. These three processes operated in a manner similar to Building 771 plutonium recovery operations, anion exchange, and special recovery anion exchange but on a much smaller scale.(P062A, P076A)

Operating procedures required the ion exchange resin to be washed twice with water prior to removal from the glovebox. The washing was performed to remove any residual acid from the resin. Resin was removed from the gloveboxes in 6-inch diameter plastic-covered Kraft tubes or polyethylene bottles. The containers were assayed to determine if the resin was waste or if it contained recoverable amounts of plutonium.(P024A, P096A, P102A, P105A)

IDCs 430 and 431 are uncemented ion exchange resins. Prior to removal of the resin from a column, the resin was washed in 0.35N nitric acid; a vacuum was then drawn on the column to remove the nitric acid. The resin was then removed from the column and packaged in Fibre-Paks or polyethylene bottles, as described in Section 7.2. The Fibre-Paks and bottles were assayed for plutonium content in Building 771 before placement in a waste drum. Since 1972, drums containing discardable amounts of plutonium were sent to the Building 776 Size Reduction Facility for inspection and sealing. IDC 430 resin waste contaminated with above-discard amounts of plutonium were returned to a glovebox line for leaching. The resin was leached with 0.35N nitric acid, rinsed with water, and air-dried. This waste was designated IDC 431.(P024A) After July 1972, resins were cemented and assigned to IDC 432.(D060A)

Four ion exchange processes within Building 771 may have generated resin included in IDCs 430, 431, 432 and 822. These processes were anion exchange for plutonium recovery operations, cation exchange for plutonium purification from chloride solutions, special recovery anion exchange for plutonium and neptunium separation, and ammonium thiocyanate anion/cation exchange for americium purification.(P061A, P095A, P096A, P102A, P105A)

IDCs 432 and 822 are both solidified organic resins. IDC 822 replaced IDC 432 in the mid-1980s and IDC 806 replaced 822 in February 1987.(D060A) The change in IDCs is a reflection of a change in the cementation process, not a change in the processes generating the resins. Once the resin was determined to be waste, it was sent to Building 371 or 771 for cementation.(P061A)

The two cementation processes are summarized below:

- ***IDC 432—Resin, Leached and Cemented:*** Leached, spent anion and cation exchange resins were cemented by mixing one liter of Portland cement, 500 milliliters of water, and one liter of washed resin into a slurry. The slurry was poured into a polyethylene bottle or metal can. One-half inch of dry Portland cement was added to the bottle before the slurry was added and after the slurry had solidified.(P024A, U011A)

- ***IDC 822—Cemented Resin:*** Washed, spent anion and cation exchange resins were coated with cement with a mixer in a metal bowl. One liter of resin was slurried with 1,200 milliliters of Portland cement and 600 milliliters of water. The slurried resin was poured into a polyethylene residue container mold and allowed to solidify. Americium resin required lead shielding on the mixer and plastic container.(P043A, P098A)

Process flow diagrams for resin waste generating processes are provided in archived WSRIC information.[P061A] Waste generating processes are described in more detail in Section 3.0.

7.2 Waste Packaging

7.2.1 Drums

Uncemented ion column resins (IDCs 430 and 431) were packaged in several different configurations. The waste was placed in a Fibre-Pak (approximately 18-inch high by 6-inch diameter) lined with two polyethylene bags. Each bag was sealed with tape, and the Fibre-Pak lid was then placed on the Fibre-Pak. The Fibre-Pak was bagged out of the glovebox in single (PVC) or double plastic (PVC/polyethylene) bags. Each Fibre-Pak was assayed for plutonium content before placement in a prepared 55-gallon drum, as described above. Approximately 10 Fibre-Paks would fit into a drum.

Alternatively, the spent resins were placed in a one-gallon polyethylene bottle. After being filled with waste, the bottle was double-bagged out of the glovebox in PVC and polyethylene bags. Each bag was sealed with tape, assayed for plutonium content, and then placed in a prepared 55-gallon drum. Approximately 15 to 20 bottles would fit in a drum.[P024A] Leached resins (IDC 431) were also packaged in clamshells, which are sealed containers greater than four liters.

The bottles or cans of Resin, Leached and Cemented (IDC 432) were double-bagged out of the glovebox line in PVC or polyethylene bags.[P015A, P024A] The cemented blocks of americium resin were placed in lead-wrapped plastic residue containers after solidification and before removal from the glovebox.[P098A] The waste was then placed in a prepared 55-gallon drum.[P012A, P015A, P024A]

The polyethylene containers of Cemented Resin (IDC 822) were contained in plastic and then double-bagged out of the glovebox line in PVC or polyethylene bags.[P012A, P098A] The waste was then placed in a prepared 55-gallon drum.[P012A, P015A, P024A]

Depending on waste packaging requirements at the time, several combinations of bags and liners were used to prepare 55-gallon drums for shipment. Until 1972, waste drums were lined with one or two polyethylene drum bags. Cardboard liners may have been used to line the inner drum bag. Use of 90-mil rigid polyethylene liners began in 1972, but individual drums may or may not include them.[P024A] The rigid liner was placed in each drum and lined with one polyethylene round bottom drum liner or two polyethylene drum bags.[P008A, P012A, P024A, P063A, P064A] A fiberboard liner and discs may also have been used between the waste and the drum liners.[P012A] When a drum was full, the drum liners were twisted and taped closed, the lid was secured with a bolted ring, and a tamper indicating device was attached to the drum.[P001A, P012A, P024A]

After drums were inspected, one to two quarts of absorbent material (Oil-Dri®) was placed on top of the outer, sealed polyethylene drum bag. This procedure was changed in February 1982 when vermiculite was used to fill the space between the outer, sealed polyethylene drum bag and the top of the 90-mil rigid liner. The quantity of vermiculite varied from 3 to 12 pounds according to the amount of waste contained in each drum.[P024A]

During RTR examinations of RF waste containers, quantities of absorbent were identified that varied significantly from expected quantities, and some drums contained no absorbent. In addition, Oil-Dri® and vermiculite may have been used in some drums outside the expected time periods, or other absorbent materials may have been used.(P221A)

7.2.2 Boxes

There is no evidence that resin waste (IDCs 430, 431, 432, and 822) were packaged into boxes.(P024A)

7.3 Waste Characterization

Resin wastes are characterized based on knowledge of the material, knowledge of the processes generating the waste, RTR/VE, waste analysis, and HGAS analysis. These wastes are at least 50 percent by volume organic resin and are classified as homogeneous waste.(P593A) Potential hazardous chemical constituents assigned to this group of IDCs by AK documentation are identified in Table 7-3. There is no supporting AK documentation that identifies that the resin waste came into contact with sources of PCBs. PCBs are not expected to be present in the resin wastes.(P368A, P393A, C207A)

Table 7-3. Potential hazardous chemical constituents of resin waste.

IDC	Chemical Constituents(D046A, P015A, P016A, P024A, P361A, P368A)
430	None
431	None
432	1,1,1-trichloroethane, carbon tetrachloride, methylene chloride, lead, trichloroethylene
822	None

7.3.1.1 Radionuclides

Information about radionuclides common to all RF wastes is presented in Section 3.0 of this document. The radionuclides potentially contained in the resin waste and radioassay interferences are as follows:(P024A, P368A)

- The radionuclides of concern for the RF resin wastes (IDCs 430, 431, 432, and 832) are ^{238}Pu, ^{239}Pu, ^{240}Pu, ^{242}Pu, ^{233}U, ^{234}U, ^{238}U, and ^{241}Am.
- The two most prevalent radionuclides expected in the resin waste containers are ^{239}Pu and ^{240}Pu.
- Resins may also be contaminated with ^{241}Am, EU, ^{245}Cm, ^{244}Cm, ^{243}Am, and ^{40}K.
- The remaining WIPP-tracked radionuclides, ^{137}Cs and ^{90}Sr, are not expected to be present in measurable quantities in the resin wastes.

Containers of solidified organic resin wastes containing concentrations of plutonium in excess of 20 percent by weight for the aggregate of any material category are not part of this waste stream.(P368A, C334A)

Radionuclide contamination in anion and cation ion exchange resins from plutonium recovery operations in Buildings 371and 771 consisted primarily of plutonium because americium and other impurities remained in the acid solution while the plutonium loaded onto the resin.(P061A) Resin from the americium recovery and purification process was contaminated with higher levels of americium since both plutonium and americium were loaded onto the resins.(P113A) Limited amounts of resin waste were generated in Building 559 and the special recovery area of Building 771. This resin waste was possibly contaminated with neptunium, plutonium, americium, and ^{235}U.(P076A, P095A, P096A)

Organic resins were solidified in Buildings 371 and 771 in preparation for shipment. Therefore, resins from both buildings could have originated from any of the ion exchange processes identified.(P024A, P067A) Repackaging operations were conducted in the Building 776 Size Reduction Vault (SRV), and the repacked containers could also contain resins from any of the ion exchange processes.(C175A, P078A)

No interfering contaminants other than hydrogen were identified in this waste.

8.0 LAUNDRY, TANK CLEAN OUT, AND SEWER SLUDGE

This waste group consists of sludge generated by sewage treatment in Building 995, laundry operations in Building 776, and plutonium recovery operations in Building 776. Historic IDC descriptions and dates of generation for the sludge waste in the AMWTP inventory are presented by IDC in Table 8-1.(P090A, P367A, P368A, P370A, U059A, U069A, U092, U128A)

Table 8-1. Laundry, tank clean out, and sewer sludge waste in the AMWTP inventory.

IDC	Title	Dates of Generation[a]
095	Sewer Sludge	November 1971
976	Building 776 Process Sludge	May 1976–February 1977
978	Laundry Sludge	December 1975–February 1976
995	Sewer Sludge	March 1972–July 1976[a]
749[b]	Pits 11 and 12 Sewer Sludge	June1968–September 1972

a. Dates of generation do not include waste retrieved from Pits 11 and 12. Dates of generation are based on available shipping papers and may not reflect the actual inventory at INL due to incomplete records for waste received prior to 1973.

b. Prior to 1971, this waste was not identified by an IDC; therefore, AMWTP has assigned IDC 749 based on the drum prefix assigned by RF for first stage sludge generated in Building 995.

Item Description Codes 095 and 995—Sludge: These wastes primarily consist of moist to dry sewer sludge generated from cleaning the stabilization ponds at the Sewage Treatment Plant (Building 995). IDC 995 replaced IDC 095 in early 1972. IDC 995 also includes a limited number of waste containers containing sludge generated by Plutonium Recovery Operations (Building 771).(P024A)

Item Description Code 749—Pits 11 and 12 Sewer Sludge: This waste consists of sewer sludge generated from the same process as IDC 095 that were shipped to INL prior to October 1972 and placed into Pits 11 and 12. The waste was subsequently retrieved from the Pits and placed into the TSA-RE prior to 1979. IDC 749 was assigned by AMWTP because the majority of the waste from Pits 11 and 12 was generated prior to the use of IDCs at RF.

Item Description Code 976—Building 776 Process Sludge: This waste consists of sludge mixed with Portland cement. The sludge consists of dirt, sand, gravel, floor sweepings, and other similar materials. The sludge was removed from two process tanks located north of Building 776. These tanks collected liquid effluent from the floor drains in Building 776.(P024A)

Item Description Code 978—Laundry Sludge: This waste consists of sludge mixed with Portland cement. The sludge consists of lint, spent detergent, dirt, and other similar waste generated by laundry operations. The sludge was removed from two laundry tanks located north of Building 776. Both tanks collected liquid effluent from the laundry in Building 776.(P024A)

Potential waste material parameters for laundry, tank clean out, and sewer sludge waste containers, including packaging materials, are listed in Table 8-2. RF waste management and inspection protocol allowed containers of wastes to contain up to 10 percent of an IDC other than that assigned to the container.(P016A)

Table 8-2. Potential waste material parameters for laundry, tank clean out, and sewer sludge waste containers.

Potential Waste Material Parameters	Examples
Steel (packaging materials)	55-gallon drum
Plastics (packaging materials)	90-mil drum liner, O-ring bag, drum bag
Other Inorganic Materials	Absorbents (e.g., vermiculite and Oil-Dri®)[a]
Inorganic Matrix	Sludge layered with cement or cement/diatomite mixture

a. Only the absorbent located on top of the drum was expected to be distinguishable from the layered sludge.

8.1 Waste Generation

Miscellaneous heel wastes were generated by various plutonium production and recovery processes. See Section 3.0 for details of these processes.

8.2 Waste Packaging

8.2.1 IDCs 095 and 995

8.2.1.1 Drums

Sewer sludge (IDCs 095 and 995) was packaged in drums from 1972 to 1974. Sludge was placed directly into prepared 55-gallon drums or prepared boxes. Portland cement was added to waste containers as absorbent. The last box of sludge was shipped to the INL in 1976. Packaging and handling information for sludge waste generated by Plutonium Recovery (IDC 995 only) is not available.(P024A)

Until 1972, each 55-gallon drum was lined with two polyethylene drum bags. Portland cement was placed in the bottom of the inner bag, and the drum was filled with sludge. If the sludge was moist, cement was added in layers as the drum was filled. After the drum was filled, the sludge was "capped" with Portland cement and each plastic bag was closed by sealing with tape.(P024A)

In approximately 1972, use of the 90-mil polyethylene rigid drum liner began. A drum liner was placed in each drum and then the drum was lined with one or two polyethylene drum bags. Sludge was placed in the drum as previously described.(P024A)

Depending on waste packaging requirements at the time, several combinations of bags and liners were used to prepare 55-gallon drums for shipment. In 1972, the use of 90-mil rigid polyethylene liners began, but individual drums may or may not include them.(P024A) The rigid liner was placed in each drum and lined with one polyethylene round bottom drum liner or two polyethylene drum bags.(P008A, P012A, P024A, P063A, P064A) A fiberboard liner and discs may also have been used between the waste and the drum liners.(P012A) When a drum was full, the drum liners were twisted and taped closed, the lid was secured with a bolted ring, and a tamper indicating device was attached to the drum.(P001A, P012A, P024A)

Drums of IDC 095 and 995 wastes were not examined during the 3,100 m^3 Project. Acceptable knowledge indicates that, while several combinations of drum bags, poly bags, and O-ring bags may have been used to package the wastes, any combination of these plastic bags, provided that three layers of containment were not exceeded, did not impact acceptability of the drums. However, no more than two of these layers may be inner bags.(P024A) In addition, Oil-Dri® and vermiculite may have been used in some drums outside the expected time periods, or other absorbent materials may have been used.(P221A)

8.2.1.2 Boxes

After 1974, sludge was packaged in 4 × 4 × 7-foot FRP boxes because of concerns about pressurization of drums filled with sludge. Each box was lined with a polyethylene box bag and then the bag was lined with a cardboard liner. Approximately 90 pounds of Portland cement was placed in the box bottom before filling with sludge. After the box was filled, the sludge was capped with approximately 90 pounds of Portland cement and the polyethylene box bag ends and sides were folded toward the box center and sealed with tape.(P024A)

8.2.2 IDCs 976 and 978

8.2.2.1 Drums

Sludge removed from the process tanks and the laundry tanks was very wet. The sludge was shoveled out of each tank and placed into prepared 55-gallon drums. Portland cement was then added to each drum and mixed into the sludge with a paddle. The drums were allowed to stand for a period of time to ensure no free liquids were present. Additional cement was added if necessary. The quality of the sludge and cement mixture has been described as a poor grade of cement or concrete. The drums were then inspected and sealed.(P024A)

Sludge was placed in 55-gallon drums lined with a 90-mil rigid polyethylene drum liner. The rigid liner was then lined with one or two polyethylene drum bags. Each drum bag was sealed with tape after the drum was inspected for free liquids.(P024A)

While IDC 976 might be encountered by AMWTP as drums in boxes (see below), no individual drums of IDC 978 waste were shipped to INL.

To prepare 55-gallon drums for shipment, several combinations of bags and liners were used depending on waste packaging requirements at the time. In 1972, use of 90-mil rigid polyethylene liners began, but individual drums may or may not include them.(P024A) The rigid liner was placed in each drum and lined with one polyethylene round bottom drum liner or two polyethylene drum bags.(P008A, P012A, P024A, P063A, P064A) A fiberboard liner and discs may also have been used between the waste and the drum liners.(P012A) When a drum was full, the drum liners were twisted and taped closed, the lid was secured with a bolted ring, and a tamper indicating device was attached to the drum.(P001A, P012A, P024A) Other types of closure might also be encountered including, but not limited to, twisted and tied, plastic tie, or folded and taped. Based on previous VEs of RF containers, drums may also exhibit a filtered bag, drum stub bag, or no bag packaging.

Drums of IDC 976 and 978 wastes were examined during the 3,100 m^3 Project and it was determined that several combinations of drum bags, poly bags, and O-ring bags may have been used to package the wastes. Any combination of these plastic bags did not impact acceptability of the drums, provided that five layers of containment were not exceeded; however, no more than three of these layers may be inner bags. In addition, Oil-Dri® and vermiculite may have been used in some drums outside the expected time periods, or other absorbent materials may have been used.(P221A)

8.2.2.2 Boxes

Prior to shipment to INL, it was believed that some of the drums of IDC 976 and 978 waste began to pressurize or show signs of pressurization. At that time, a decision was made to place the drums into waste boxes because boxes are not air-tight. Boxes shipped to INL contain up to five drums per box. It is not believed any other wastes were placed in the waste boxes.(P024A) Because sludge was removed from the process tanks and the laundry tanks and packaged during overlapping time periods, it is possible that some IDC 976 boxes contain IDC 978 drums and vice versa. It is also possible that drum lids might have been loosened or holes might have been drilled in the drum lids prior to placement in the boxes.(P024A)

Drums were placed in 4 × 4 × 7-foot FRP boxes. Each box was lined with a polyethylene box bag; the bag was then lined with a cardboard liner. After the box was filled with drums, the box bag ends and sides were folded toward the box center and taped to seal the folded edges.(P024A)

8.3 Waste Characterization

Laundry, tank clean out, and pond sludges were characterized based on knowledge of the material and processes used to generate the waste. This waste is at least 50 percent (by volume) inorganic particulates and is classified as a homogeneous waste.(P141A) Potential hazardous chemical constituents assigned to this group of IDCs by AK documentation are identified in Table 8-3. There is no evidence of laundry, tank clean out, and pond sludge with PCBs at

concentrations greater than 50 parts per million in the AMWTP inventory. Items that contain PCBs (e.g., light ballasts) are not expected to be present.(P393A)

Table 8-3. Potential hazardous chemical constituents of laundry, tank clean out, and pond sludge waste.

IDC	Chemical Constituents(P319A)
095	None
976	1,1,1-trichloroethane, 1,1,2-trichloro-1,2,2-trifluoroethane, 1,2-dichloroethylene, 1-butanol, carbon tetrachloride, cadmium, chloroform, chromium, methanol, methylene chloride, lead, tetrachloroethylene, trichloroethylene, xylene
978	None
995	None

8.3.1 Radionuclides

Information about radionuclides common to all RF wastes is presented in Section 3.0 of this document. The radionuclides potentially contained in the laundry, tank clean out, and pond sludge are as follows:(P024A)

- The radionuclides of concern for the RF laundry, tank clean out, and pond sludge (IDCs 095, 976, 978, and 995) are ^{238}Pu, ^{239}Pu, ^{240}Pu, ^{242}Pu, ^{233}U, ^{234}U, ^{238}U, and ^{241}Am.
- The two most prevalent radionuclides in laundry, tank clean out, and pond sludge are ^{239}Pu and ^{240}Pu.
- Uranium-235 and ^{238}U may also be present in some of the sludge depending on the relative mixture of EU and DU in the waste.
- The remaining WIPP-tracked radionuclides, ^{137}Cs and ^{90}Sr, are not expected to be present in measurable quantities in laundry, tank clean out, and pond sludge.

Due to the potential variability of the waste materials present in containers of laundry, tank clean out, and pond sludge (IDCs 095, 976, 978 and 995), specific identification of the radionuclide form, particle size and distribution, interfering waste contaminants, and physical matrix parameters has not been determined. However, hydrogen is assumed to be present due to degradation of the plastic packaging materials.

9.0 COMBUSTIBLES AND PLASTICS

This waste group consists of combustibles and plastic wastes generated by the production, recovery, laboratory, treatment, maintenance, and R&D activities associated with plutonium operations. The waste was generated in Buildings 371, 374, 559, 707, 771, 774, 776, 777, and 779.(P001A, P012A, P016A)

Historic waste descriptions and dates of generation for the combustibles and plastics waste in the AMWTP inventory are presented by IDC in Table 9-1.(P090A, P367A, P368A, P370A, U059A, U069A, U092, U128A)

Table 9-1. Combustibles and plastic waste in the AMWTP inventory.

IDC	Title	Dates of Generation[f]
330	Dry Combustibles Combustibles-Dry(P032A) Paper and Rags-Dry(P024A)	April 1971–April 1988[a,e]
336	Wet Combustibles Combustibles-Wet(P032A) Paper and Rags-Moist(P024A)	May 1971–April 1988[b,e]
337	Plastics, Teflon, Wash, PVC Plastics(P012A) Plastics (Teflon, PVC, Poly, etc.)(P032A) Plastic (Teflon, PVC, etc.) and Non-leaded Rubber(P024A)	July 1971–June 1987[c,e]
831	Dry Combustibles	April 1988–July 1989
832	Wet Combustibles	December 1987–March 1989
833	Plastics, TRU Mixed	July 1988–December 1988
010	Paper and Rags	Prior to June 1971[d]
030	Plastic	Prior to June 1971[d]

a. Does not include containers from prefix RD94 with a pack date of June 1994.

b. Does not include containers from prefix RD93 with a pack date of July 1994.

c. Does not include containers from Prefixes RD93 and RD94 with pack dates of June – July 1994 and September 1994, respectively.

d. Two digit IDCs that may have been used prior to June 1971.(C267A)

e. Prefixes RD93, RD94, and RD95 were assigned to drums repackaged during characterization activities at the INL in the 1990's.

f. Dates of generation are based on available shipping papers and may not reflect the actual inventory at INL due to incomplete records for waste received prior to 1973.

Item Description Code 330—Dry Combustibles: This IDC consists of dry combustibles generated by the plutonium production, recovery, treatment, laboratory, and maintenance operations in Buildings 371, 374, 559, 707, 771, 774, 776, 777, and 779.(P012A) Dry combustibles consist primarily of cloth, paper, and wood wastes including wipes, towels, rags, coveralls, booties, gloves, and wood filter frames. Dry combustibles may contain up to 50 percent plastic and 10 percent of other waste such as metal, glass, and leaded gloves. Dry combustibles may be contaminated with solvents, acids, bases, and other reagents used in the processes from which they were generated.(P001A, P024A, P032A, P052A)

Item Description Code 336—Wet Combustibles: This IDC consists of wet combustibles generated by the plutonium production, recovery, treatment, laboratory, and maintenance operations in Buildings 371, 374, 559, 707, 771, 774, 776, 777, and 779.(P012A) Wet combustibles are primarily cloth, paper, and wood wastes including wipes, towels, rags, coveralls, booties, gloves, and wood filter frames. Wet combustibles may contain discernable quantities of process liquids. Wet combustibles may contain up to 50 percent plastic and 10 percent of other waste such as metal, glass, and leaded gloves. Wet combustibles may be contaminated with any of the solvents, acids, bases, and other reagents used in the processes from which they were generated.(P001A, P024A, P032A, P052A)

Item Description Code 337—Plastics, Teflon, Wash, PVC: This IDC consists of plastics and rubber generated by the plutonium production, recovery, treatment, laboratory, and maintenance operations in Buildings 371, 374, 559, 707, 771, 774, 776, 777, and 779.(P012A) Plastic wastes are primarily composed of polypropylene, polyethylene, PVC, Teflon, Hypalon, Tygon, and latex. Plastic and rubber items include respirator parts, supplied air suits, filters, hoses, non-leaded glovebox gloves, surgical gloves, bags, tape, and sheeting. Plastic and rubber wastes may be contaminated with solvents, acids, bases, and other reagents used in the processes from which they were generated.(P001A, P024A, P032A, P052A)

Item Description Code 831—Dry Combustibles: This waste consists of dry combustibles and may contain cloth, paper, and wood products such as wipes, towels, rags, coveralls, booties, and/or HEPA filter frames.

Item Description Code 832—Wet Combustibles: IDC 832 is not listed in the INL-TCWCIS due to the small amount of waste generated. Cartons of mercury waste were placed in other non-combustible waste containers (see IDCs 803, 805, 810, 811, 813, 814, and 826). A total of 61 cartons of contaminated elemental mercury have been included in wastes shipped to the INL.

Item Description Code 833—Plastics, TRU Mixed: This waste consists of TRU contaminated mixed waste plastic and may contain polypropylene, polyethylene, and PVC in the form of empty plastic bottles, piping and tubing, plastic windows, plastic bags and plastic sheeting, tygon tubing, supplied air suits, respirator parts and cartridges, and/or non-leaded glovebox gloves.

Item Description Code 010—Paper and Rags: This waste consists of paper and rags generated from the same processes as IDCs 330 and 336 but was the original IDC designator used at RF prior to June 1971.(C267A)

Item Description Code 030—Plastic: This waste consists of plastic generated from the same processes as IDC 337 but was the original IDC designator used at RF prior to June 1971.(C267A)

Typical waste material parameters for combustibles and plastic waste containers, including packaging materials, are presented in Table 9-2.(P222A, P368A) RF waste management and inspection protocols allowed waste containers to include up to 10 percent of IDCs different than the IDC assigned to the container.(P016A) The VE of combustibles and plastic containers identified a variety of metal and glass items including Raschig rings, nails, cans, vials, bottles, lead sheeting, bolts, pipes, welding rods, batteries, tools and wire.(P015A, P024A)

INEL-96/2080 provides detailed information of the items identified in combustibles and plastic waste containers during the 3,100 m^3 Project. These items include a variety of combustible, glass, concrete, lead, and plastic. Plastic items include wipes, surgical gloves, paper, Raschig rings, beakers, vials, fluorescent bulbs, leaded gloves, lead tape, scrap lead, rubber gaskets, plastic bags, containers and tubing. Other items may include tantalum crucibles, asbestos tie-wraps, aerosol cans, and light ballasts.(P368A) In a small percentage of the combustibles and plastic waste containers, AK confirmation activities identified many items including small quantities of liquid, Raschig rings, beakers, vials, rubber gaskets, batteries, light bulbs, lead items (e.g., rubber gloves, aprons, tape, and sheeting), and cellulosic and plastic items.(P368A)

Table 9-2. Typical waste material parameters for combustibles and plastic waste containers.

Typical Material Parameters	Examples
Steel (packaging materials)	55-gallon drums
Plastics (packaging materials)	90-mil drum liners, O-ring bags, drum bags
Plastics (waste materials)	Plastic, rubber and latex items
Cellulosics	Cardboard liners, fiberboard liners and disks, paper, cloth and wood
Other inorganic materials	Vermiculite, Oil-Dri®, Raschig rings, glass
Other metals	Lead liners, lead sheeting
Iron metals/alloys	Metal waste items

9.1 Waste Generation

Combustibles and plastic wastes were generated by plutonium operations at the RF. Operation and process details relevant to this waste stream are presented in Section 3.0.

Non-routine operations include spill clean-up, strip-out operations, and activities associated with fires and other contaminant releases. Occasionally, spills of various materials occurred due to leaks in tanks and piping or from material releases from gloveboxes. Tanks or pipes may have contained acids, bases, or solvents used during normal process operations. A paint stripper containing methylene chloride was often used for decontamination. Combustibles and plastic wastes containing paint (possibly containing lead), paint stripping compounds, and process solutions were generated from this type of activity.(P053A, P067A)

Non-routine strip-out activities generated wastes including glovebox lines, process piping, valves and associated systems. Strip-out activities were performed when glovebox lines were scheduled to be replaced or renovated. Combustibles and plastic wastes containing solvents such as trichloroethylene or 1,1,1-trichloroethane may have been generated by decontamination during this type of operation.(P067A, P108A)

9.2 Waste Packaging

9.2.1 Drums

Combustibles and plastic wastes were either double-bagged out of the glovebox or placed in polyethylene bottles and double-bagged out of the glovebox.(P012A)

To prepare 55-gallon drums for shipment, several combinations of bags and liners were used depending on waste packaging requirements at the time. From 1970 to 1972, waste drums were lined with one or two polyethylene drum bags and cardboard liners may have been used to line the inner drum bag. In 1972, the use of 90–mil rigid polyethylene liners began.(P024A) The rigid liner was placed in each drum and lined with one polyethylene round bottom drum liner or two polyethylene drum bags.(P008A, P012A, P016A, P024A, P063A, P064A) A PVC O-ring bag and a polyethylene bag were used if the drum was attached to the glovebox.(P016A) A fiberboard liner and discs may have also been used between the waste packages and the drum liners.(P008A, P012A, P016A, P064A) Lead drum liners were used in some instances.(P015A, P024A) Fibre-Paks were used as an inner container in some drums of IDC 336. When a drum was full, the drum liners were twisted and taped closed, or closed with a plastic tie; the lid was secured with a bolted ring, and a tamper indicating device was attached to the drum.(P012A, P016A, P024A)

During characterization for the 3,100 m^3 Project, it was observed that several combinations of drum bags, poly bags, and O-ring bags were used to package IDC 330, IDC 336, and IDC 337 wastes. Some drums did not contain a rigid drum liner. The various combinations of liners and plastic packaging do not impact acceptability of a drum provided that four layers of containment, two of which are drum liner bags, were not exceeded for IDC 336. For IDCs 330 and 337, five layers of containment, two of which are drum liner bags, could not be exceeded. Drums that exceeded Transuranic Package Transporter (TRUPACT)-allowed containment layers were generally flagged for treatment.(P282A, P283A)

After drums were inspected, one to two quarts of absorbent material (e.g., Oil-Dri®) may have been placed on the top of the outer, sealed polyethylene drum bag. In February 1982, this procedure changed when vermiculite was used to fill the space between the outer, sealed polyethylene drum bag and the top of the 90-mil rigid liner. The quantity of Oil-Dri® or vermiculite varied according to the amount of waste contained in each drum.(P024A) RTR examinations conducted during the 3,100 m^3 Project, indicate varying configurations of absorbents and time periods of use were not uncommon. Oil-Dri® or vermiculite may have been used outside the expected time periods.

Wet combustibles were sorted from dry combustibles based on the criteria that wet combustibles contained a discernable amount of moisture. This definition was ambiguous and in some cases, may have resulted in incorrect assignments between IDC 330 and IDC 336. This observation was supported by inspections conducted on drums in inventory. Some drums of wastes assigned to IDC 336 were found to no longer contain discernable liquids, while drums assigned IDC 330 were found to be wet or contain free liquids.(P008A, P015A)

9.2.2 Boxes

In 1974, RF began repackaging line- and non-line-generated combustible wastes into 4 × 4 × 7-foot boxes.(P024A) The wastes were initially packaged in drums at each waste-generating area. After the drums were assayed for plutonium content, drums containing discardable amounts of plutonium were transported to the Size Reduction Facility (Building 776) for repackaging. At size reduction, bags of combustible wastes were removed from waste drums and placed in a box.

IDC 330 waste was usually contained in one to four layers of plastic.(P024A) The outer bag of each waste bag was punctured to allow better packaging efficiency. Waste bags were examined before placement in a box. Any non-combustible items were removed from the waste bag. IDC 330 boxes occasionally contained bags of moist combustible waste mixed in with bags of dry combustibles. Oil-Dri® was added to any boxes suspected of containing moisture. The absorbent was placed on the bottom of the box and more was added as the box was filled. The quantity of added absorbent varied. The box was sealed after being filled with waste packages.

Each plywood box was coated with FRP. Each box was lined with a polyethylene box bag, and the bag was then lined with a cardboard liner. After the box was filled with waste, the bag ends and sides were folded toward the box center and tape was used to seal the folded edges.

All IDC 336 waste boxes shipped to the INL were generated by size reduction operations at Building 776. The majority of boxes were generated during fire cleanup operations and from repackaging drums of wet wastes into boxes. Because these wastes were generated after 1972, plywood boxes coated with FRP were used. The waste was contained in one to four layers of plastic. Portland cement and Oil-Dri® were used as absorbent agents. Some absorbent was placed in the bottom of the box and more was added as the box was filled with waste. Each plywood box was lined with a polyethylene box bag, and the bag was then lined with a cardboard liner. After the box was filled with waste, the bag ends and sides were folded toward the box center and taped to seal the folded edges. The box was then sealed.(P024A)

IDC 337 boxes were lined with a polyethylene box bag and the bag was lined with a cardboard liner. After the box was filled with waste, the bag ends and sides were folded toward the box center and taped to seal the folded edges. Prior to 1972, uncoated plywood boxes were used. Coating plywood boxes with FRP began in 1972.(P024A)

IDCs 831, 832, and 833 wastes were packaged in boxes prepared with either a polyethylene box bag or a cardboard box liner. Up to 100 pounds of absorbent may have been added to boxes during packaging.

9.3 Waste Characterization

Combustibles and plastic wastes were characterized based on knowledge of the material, knowledge of the processes generating the waste, RTR review of the waste, VE, and HGAS. The wastes contain at least 50 percent (by volume) materials that meet the WAP criteria for classification as heterogeneous debris wastes.(P141A) Potential hazardous chemical constituents assigned to this group of IDCs by AK documentation are identified in Table 9-3.(P633A) Combustible and plastic wastes with PCBs at concentrations greater than 50 parts per million are not expected within the AMWTP inventory. A portion of the containers in this waste stream may contain PCB items (e.g., fluorescent light ballasts) with concentrations greater than 50 parts per million PCBs.(P368A, P393A)

Table 9-3. Potential hazardous chemical constituents of combustibles and plastic waste.

IDC	Chemical Constituents (P015A, P016A, P024A, P307A, P368A)
330 010	1,1,1-trichloroethane, 1,1,2-trichloro-1,2,2-trifluoroethane, acetone, carbon disulfide, carbon tetrachloride, cadmium, chloroform, chromium, cyanide cleaning bath solutions, cyanide plating bath solutions, electroplating sludges, ethyl benzene, lead, mercury, methanol, methylene chloride, silver, toluene, tetrachloroethylene, trichloroethylene, xylene
336	1,1,1-trichloroethane, 1,1,2-trichloro-1,2,2-trifluoroethane, acetone, carbon disulfide, carbon tetrachloride, cadmium, chloroform, chromium, cyanide cleaning bath solutions, cyanide plating bath solutions, electroplating sludges, ethyl benzene, lead, mercury, methanol, methylene chloride, silver, toluene, tetrachloroethylene, trichloroethylene, xylene
337 030	1,1,1-trichloroethane, 1,1,2-trichloro-1,2,2-trifluoroethane, acetone, carbon disulfide, carbon tetrachloride, cadmium, chloroform, chromium, cyanide cleaning bath solutions, cyanide plating bath solutions, electroplating sludges, ethyl benzene, lead, mercury, methanol, methylene chloride, silver, toluene, tetrachloroethylene, trichloroethylene, xylene
831	1,1,1-trichloroethane, 1,1,2-trichloro-1,2,2-trifluoroethane, carbon tetrachloride, methylene chloride
832	1,1,1-trichloroethane, 1,1,2-trichloro-1,2,2-trifluoroethane, carbon tetrachloride, methylene chloride
833	1,1,1-trichloroethane, 1,1,2-trichloro-1,2,2-trifluoroethane, carbon tetrachloride, methylene chloride

9.3.1 Radionuclides

Information about radionuclides common to all RF wastes is presented in Section 3.0 of this document. The radionuclides potentially contained in the combustible and plastic wastes, and radioassay interferences, are described as follows:

- The radionuclides of concern for the RF combustibles and plastic wastes (IDCs 330, 336, and 337) are ^{238}Pu, ^{239}Pu, ^{240}Pu, ^{242}Pu, ^{233}U, ^{234}U, ^{238}U, and ^{241}Am.
- The two most prevalent radionuclides expected in the combustible and plastic waste containers are ^{239}Pu and ^{240}Pu.
- The remaining WIPP-tracked radionuclides, ^{137}Cs and ^{90}Sr, are not expected to be present in measurable quantities in combustibles and plastic wastes.

Radioassay interferences may include polypropylene from Ful-Flo filters, cadmium or chromium from HEPA filter frames, aluminum foil used as a spacer between the folds of the filter media, and Nomex, which is an aromatic polyamide fiber used in HEPA filters at five to seven weight percent.(P035A, P052A)

A log entry from Building 774 indicates the presence of tritium in liquid received from Building 779. The liquid appears to have been cemented and then buried in a combustible wastes drum (IDRF074607832).(U043A)

10.0 FILTERS AND INSULATION

This waste group consists of filters and insulation generated by the production, recovery, laboratory, treatment, maintenance, waste treatment, and R&D activities associated with plutonium operations at RF. Filter debris waste was generated in Buildings 371, 374, 559, 707, 771, 774, 776, 777, and 779.(P001A, P012A, P016A)

Historic waste descriptions and dates of generation for this waste in the AMWTP inventory are presented by IDC in Table 10-1.(P090A, P367A, P368A, P370A, U059A, U069A, U092, U128A) IDCs 335, 376, and 490 were characterized together under the CBFO-approved WSPF INW211.001, and corresponding containers were shipped to the WIPP facility by the 3,100 m^3 Project.(P216A, P225A) IDC 328 and IDC 338 were not included in the WSPF because of the limited number of containers from these IDCs that were available for characterization at the time. Containers of IDC 360 waste are not in the INL accessible storage inventory and were not available for characterization by the 3,100 m^3 Project.

IDCs 328, 335, 338, 360, 376, and 490 were characterized together under CBFO-approved WSPF BN211, and drums are direct shipped to the WIPP facility by the AMWTP project.(P461A) Filter debris waste is characterized as mixed TRU waste.

Table 10-1. Filters and insulation waste in the AMWTP inventory.

IDC	Title	Dates of Generation[b]
328	Ful-Flo Incinerator Filters	April 1982–February 1983
335	Absolute 8 × 8 Filters	September 1971–July 1987
338	Insulation and CWS Filter Media	October 1972–May 1976[a]
360	Insulation	September 1971–January 1973
376	Cemented Insulation and Filter Media	April 1976–September 1988
490	HEPA Filters and CWS Filters	January 1971–July 1989
491	Plenum Prefilters	October 1987–December 1987

a. Does not include containers from prefix RD93 with a pack date of July 1994.

b. Dates of generation are based on available shipping papers and may not reflect the actual inventory at INL due to incomplete records for waste received prior to 1973.

Item Description Code 328—Ful-Flo Incinerator Filters: This IDC consists of in-line cartridge filters (Ful-Flo trade name) from the recovery incinerator system in Building 771. These filters were used to remove particulates from the liquid streams associated with the incinerator off-gas scrubber system.(P001A, P037A, P444A, P052A) The filters are one-piece, molded filters about 10 inches long by 3-1/2 inches in diameter. Filter media consists of red fibrous material, which filtered particulates greater than 5 microns.(P052A) One-micron and 5-micron fibrous polypropylene filters were also used.(P001A, P444A, P052A) Ful-Flo filters may contain caustic free liquids.(P052A) A portion of the Ful-Flo filters were processed as IDC 376.(P001A)

Item Description Code 335—Absolute 8 × 8 Filters: This waste consists of Absolute 8 × 8 Filters (e.g., glovebox air intake and exhaust HEPA filters). Filter sizes included 8 × 8 × 6 inches, 8 × 8 × 4 inches, and 12 × 12 × 6 inches. Filter frames were constructed of either fire-retardant plywood or particleboard. The filter media was made of Nomex (trade name for glass and aromatic polyamide fiber) or glass fiber. Based on historical information, there is evidence that HEPA filters manufactured prior to the late 1970s may have contained asbestos.(P001A, P016A, P024A, P444A, P052A) This waste includes acid-, non-acid-, and solvent-contaminated filters.(C103A) The waste may also contain limited amounts of combustible materials such as surgical gloves.(P024A) Beginning in approximately 1989, acid- and non-acid-contaminated Absolute 8 × 8 filters were sorted. IDC 335 was assigned to non-acid contaminated filters, and acid-contaminated filters were assigned IDC 342. Absolute filters contaminated with plutonium above the EDL were processed in Building 771 as IDC 338. Filters below the EDL, which were wet or had been exposed to corrosive fumes, were sent to Building 776 and processed as IDC 376.(P001A, P016A, P024A)

Item Description Code 338—Insulation and CWS Filter Media: This waste consists primarily of filter media removed from various filters including Absolute dry box filters (IDC 335) and HEPA filters (IDC 490). Based on historical information, there is evidence that HEPA filters manufactured prior to the late 1970s may have contained asbestos. This waste may also include asbestos-type pipe and furnace insulation, asbestos fire blankets, and asbestos gloves.(P024A, P043A, P444A) Filter media that was wet, or had been exposed to corrosive fumes was processed in Building 776 as IDC 376.(P001A, P032A, P043A)

Item Description Code 360—Insulation: This waste consists of asbestos-type pipe insulation, asbestos gloves and fire blankets, and filter medium (glass fiber and glass fiber with asbestos) from prefilters and filters. The waste may contain limited amounts of combustible materials such as surgical gloves. IDC 360 was replaced by IDCs 338 and 376 in 1973.(P024A)

Item Description Code 376—Cemented Insulation and Filter Media: This waste consists of Ful-Flo incinerator filters (IDC 328), Absolute 8 × 8 Filters (IDC 335), and insulation and filter media (IDC 338) that were wet or had been exposed to corrosive fumes. Beginning in approximately 1975, filters, filter media, and insulation were sent to the Size Reduction Facility (Building 776) where dry Portland cement was added to the waste.(C103A, P001A, P024A, P444A) After adding cement, the waste was assigned IDC 376.(P001A) Prior to 1979, IDC 376 consisted primarily of filter media removed from various filters. Waste generated since 1979 consists of filter media and whole filters.(P024A) The waste also includes asbestos or fiberglass pipe and furnace insulation, asbestos fire blankets, and asbestos gloves.(P024A, P032A)

Item Description Code 490—HEPA Filters and CWS Filters: This waste consists primarily of 24 × 24 × 12-inch HEPA filters from ventilation intake and exhaust filter plenums. The waste may also include various other sizes of plenum HEPA filters, prefilters, and glovebox HEPA filters.(P024A, U009A) The filter frames are constructed of either fire-retardant plywood or particleboard. A limited number of HEPA filters have aluminum frames. The filter media is made of Nomex (glass and aromatic polyamide fibers) or glass fiber. Based on historical information, there is evidence that HEPA filters manufactured prior to the late 1970s may have

contained asbestos.(P001A, P016A, P024A, P052A) The waste may also contain metal canister filters that were used for respiratory protection during chemical spill cleanup. At one time, IDC 490 was referred to as CWS filters.(C103A, C104A, P024A) The waste includes filters that were potentially contaminated with acid vapors (acid-contaminated), solvent vapors (solvent-contaminated), and filters that are not expected to have been contaminated with either acid or solvent vapors (non-acid contaminated). In the mid-1980s, prefilters were sorted from HEPA filters and were assigned IDC 491. Beginning in approximately 1989, acid- and non-acid-contaminated plenum HEPA filters were sorted. IDC 490 was assigned to non-acid-contaminated filters, and acid-contaminated filters were assigned IDC 492. Prior to 1974, HEPA filters were packaged at each waste generating area.(P024A) HEPA filters contaminated with plutonium above the EDL were processed in Building 771 as IDC 338. Filters below the EDL, which were wet or had been exposed to corrosive fumes, were sent to Building 776 and processed as IDC 376.(C104A, P001A, P016A, P024A, U009A)

Item Description Code 491—Plenum Prefilters: This waste consists of plenum prefilters. In the mid-1980s, prefilters were sorted from HEPA filters and were assigned IDC 491. Beginning in approximately 1989, acid- and non-acid-contaminated plenum HEPA filters were sorted. IDC 490 was assigned to non-acid-contaminated filters.

Typical waste material parameters for filters and insulation waste containers, including packaging materials, are listed in Table 10-2.(P461A) RF waste management and inspection protocols allowed waste containers to include up to 10 percent of IDCs different than the IDC assigned to the container.(P016A) Filter and insulation debris waste is primarily composed of various types of insulation, filters, filter frames (wood and metal), and may contain minor amounts of other maintenance waste. RTR and VE of RF debris waste streams have identified debris items including combustibles (absorbents, wood, paper, rags, gloves, etc.), plastic (bottles, tubing, bags, filters, etc.), glass (bottles, Raschig rings, beakers, etc.), lead (glass, tape, gloves, scrap, etc.), metal (nuts, bolts, cans, frames, welding rods, tools, wire, scrap, etc.), and other debris/materials (concrete, light bulbs, etc). Items identified in containers during the 3,100 m^3 Project examinations of the filter debris waste included lead tape, nails, wood frames, rubber gaskets, and D-cell batteries.(U011A, U015A, U028A) The AK confirmation activities have also identified numerous items in a small percentage of the filters waste containers, including small quantities of liquid and miscellaneous metal and plastic items.(P225A)

Table 10-2. Typical waste material parameters for filters and insulation waste containers.

Typical Waste Material Parameter	Examples
Steel (packaging materials)	55-gallon drums
Plastics (packaging materials)	90-mil drum liners, O-ring bags, drum bags
Iron-Based Metals/Alloys	Filter frames
Aluminum-Based Metals/Alloys	Filter media, filter frames
Other Inorganic Materials	Vermiculite, Oil-Dri®, filter media
Cellulosics	Filter media, wooden filter frames
Plastics (waste materials)	Small poly bags, filters

10.1 Waste Generation

Filters debris wastes were generated from the change out of filters used in gloveboxes and plenums located within the site facilities where plutonium operations were conducted. Filter debris waste also includes asbestos and glass fiber type insulation generated during maintenance activities of equipment and asbestos waste (gloves and fire blankets) used in support of plutonium operations.(P444A) Except for details relevant only to this waste stream, these operations are discussed in Section 3.0.

Beginning in 1978, the liquids from the Building 774 second stage treatment and the solar ponds were transferred to the Building 374 evaporator where a salt waste was produced.(P052A, P053A) The salt brine (concentrated by evaporation within Building 374) was introduced into a spray dryer producing small salt particles suspended in the air stream. The salt-laden air passed through a baghouse filter followed by HEPA filtration.(P106A) Over time, a visible buildup of salt would form on the HEPA filters.(P016A, P077A, P082A, D035A)

Building 774 also processed organic liquid wastes. The air from the process passed through a HEPA filtration system prior to being released.(P109A) Filters from this process may have been contaminated with sludge containing oil and halogenated solvents.(P077A, P052A, P053A) See Section 3.0 for a detailed description of these processes.

Operations in Building 771 processed wastes including Raschig rings, HEPA filters, and sludge from the filter plenum and from process piping.(P061A) HEPA filters (IDC 490) removed from filter plenums were double bagged and placed in cardboard containers for assay.(P001A) Glovebox and plenum filters (IDCs 335 and 490) contaminated with plutonium above the EDL were processed in Building 771. Prior to disassembly, glovebox and plenum filters (IDCs 335 and 490) contaminated with plutonium above the EDL were manually shaken to remove loose particulate. The particulate was sent for recovery. Filter frames were usually below the EDL and were disposed of as combustible or metal waste. Filter media were then repackaged as IDC 338.(P024A, P061A) HEPA filters (IDC 490) below the EDL were transferred to Building 776, removed from the cardboard container, and crushed in a press.(P001A, P016A)

Size reduction in Building 776 removed materials from drums and sorted them in an airlock vault.(P067A) Ful-Flo incinerator filters (IDC 328), Absolute 8 × 8 filters (IDC 335), and insulation and filter media (IDC 338) were initially packed into drums by each waste-generating area and then assayed for plutonium content. They were subsequently treated as described in Section 3.0.

Advanced size reduction operations in Building 776 disassembled or cut plutonium-contaminated gloveboxes and miscellaneous large equipment into sizes that could be packaged in approved containers. Glovebox HEPA filters in this area required periodic change-out.(P110A)

The FBI in Building 776 received low-level plutonium-contaminated combustible solid and liquid wastes.(P052A, P067A) Building 771 also housed an incinerator for processing combustible wastes.(P052A, P061A, P163A, U047A) Process flue gas from the Building 776 incinerator passed through

cyclone separators, a sintered metal filter bank, and a HEPA filter bank, before being exhausted into the HEPA filter plenum of the building ventilation system(P067A) Off-gases from the Building 771 incinerator passed through a caustic scrubber and the incinerator filter plenum before being combined with other glovebox exhaust gases in the main filter plenum.(P061A, U047A) The caustic scrubber solution (potassium hydroxide) passed through Ful-Flo filters to remove particulate matter.(P052A, P061A, P077A) See Section 17.0 for a detailed description of the incineration processes.

Routine and non-routine maintenance at RF included utilities, filter testing and change out, strip-out activities, and other general maintenance and cleanup activities. Utility systems included HVAC systems, fume scrubbers, and process vacuum systems. The HVAC systems contained air supply units for filtering incoming air and plenums for filtering exhaust air. KW detergent was used periodically to wipe down filter frames. Scrubbers housed in Buildings 371, 559, 771, and 779 used potassium or sodium hydroxide to neutralize acid fumes from various process off-gas streams and glovebox exhaust streams. Process vacuum systems provided an absolute pressure at a vacuum header, which serves as a means to transfer fluids on demand by valving arrangements.(P061A, P067A)

In-place testing of the plenum HEPA filters was initiated in response to a filter change, when there was visible damage to the filter or supporting framework, when plenum monitoring indicated a potential problem, and when the routine testing schedule for that particular bank of filters dictated.(P053A) Dioctylphthalate was used for testing filter efficiency, and KW detergent was used for wiping down filter frames.(C105A, P053A)

The Building 776 fire in 1969 resulted in the removal of filters in the area and a high volume of filter waste was generated through 1972 because the plenums were rebuilt. To protect against a similar fire, several building filtering systems were upgraded, which resulted in an increase in filter waste in 1973 and 1974.(P053A, P090A, U056A)

Other incidents generating filters included strip-out activities associated with a control valve release in Building 707 that occurred in 1974, which allowed radioactive particulates to escape from an exhaust stack on the roof and into Module K. From April 9, 1973 through April 25, 1973, tritium contaminated plutonium was processed in Building 779, causing a tritium release to the atmosphere and elevated tritium levels in surface waters, process wastes, equipment, gloveboxes, and exhaust plenums.(P053A)

10.2 Waste Packaging

Ful-Flo incinerator filters (IDC 328) were bagged out of the glovebox in one or two polyethylene bags.(P001A, P015A) The bagged filters may also be contained in process residue containers (clamshell).(P015A) Each bag or clamshell was placed in a 55-gallon drum.(P001A, P043A, P105A)

Each Absolute drybox filter (IDC 335) removed from a glovebox was double-contained in plastic bags and sealed with tape or closed with a twist and tie. Oil-Dri® was added to any

bags containing damp filters.(P001A, P016A, P024A) Each bag containing a filter was assayed for plutonium content before placement in a 55-gallon drum.(P016A, P024A, P043A)

HEPA filters (IDC 490) removed from filter plenums were double-bagged and placed in cardboard cartons. The cardboard cartons were transferred to the drum counter for assay and then sent to Building 776 where the filter was removed from the carton for size reduction. The crushed filter was then placed into a waste box or a 55-gallon drum. The cardboard cartons used for transporting the filters were cut flat and may have been placed into the container as well.(P001A, P016A) Drums of IDC 490 consist primarily of glovebox (rather than plenum) filters which were single- or double-bagged before being placed into the drum.(P016A, P024A, P043A) The waste may also contain metal canister filters that were used for respiratory protection during chemical spill cleanup. At one time, IDC 490 was referred to as CWS filters.(C103A, C104A, P024A)

Filter media (IDC 338) was packaged by placing the media into a one-gallon polyethylene bottle or in a polyethylene bag and double-bagged out of the glovebox. Each bottle or bag was placed in a 55-gallon drum.(P001A, P043A)

Insulation (IDC 360) was single- or double-bagged in PVC or polyethylene.(P015A, P024A) Each bag was sealed with tape and placed in a lined 55-gallon drum. Waste such as pipe insulation waste may have been wrapped with tape and placed directly into the drum. Wet insulation may have been dried in a clothes dryer prior to packaging.(P024A, P105A)

Processed insulation and filter media (IDC 376) consists of Ful-Flo incinerator filters, drybox filters, filter media, and insulation combined with dry Portland cement. IDCs 328, 335, and 338 were packaged as described above. After adding the cement, the bags of filters were placed in a 55-gallon drum for shipment.(P016A)

10.2.1 Drums

To prepare 55-gallon drums for shipment, several combinations of bags and liners were used depending on waste packaging requirements at the time. From 1970 to 1972, waste drums were lined with one or two polyethylene drum bags and cardboard liners may have been used to line the inner drum bag. In 1972, the use of 90–mil rigid polyethylene liners began.(P024A) The rigid liner was placed in each drum and lined with one polyethylene round bottom drum liner or two polyethylene drum bags.(P008A, P012A, P016A, P024A, P063A, P064A) A PVC O-ring bag and a polyethylene bag were used if the drum was attached to the glovebox.(P016A) A fiberboard liner and discs may have also been used between the waste packages and the drum liners.(P008A, P012A, P016A, P064A) When a drum was full, the drum bag(s) were typically twisted and taped; however, some bags were twisted and tied closed, as evidenced by RTR/VE. The lid was then secured with a bolted ring, and a tamper-indicating device was attached to the drum.(P008A, P012, P016, P024, P486A, P063A)

During characterization for the 3,100 m^3 Project, it was observed that several combinations of drum bags, poly bags, and O-ring bags may have been used to package IDCs 335, 376, and 490 wastes.(P225A) The AMWTP project has observed several packaging configuration combinations of the filter debris drums. Any combination of these plastic bags,

provided that five layers of containment (two of which can be drum liners) were not exceeded, did not impact acceptability of the drums. Drums that exceed the TRUPACT-allowed containment layers will be flagged and treated, as required.

After drums were inspected, one to two quarts of absorbent material (e.g., Oil-Dri®) may have been placed on the top of the outer, sealed polyethylene drum bag. This procedure changed in February 1982 when vermiculite was used to fill the space between the outer, sealed polyethylene drum bag and the top of the 90–mil rigid liner. The quantity of vermiculite varied from three to twelve pounds according to the amount of waste contained in each drum.(P024A) During RTR examinations of containers of filters and insulation waste, quantities of absorbent were identified that varied significantly from expected quantities, and some drums contained no absorbent. In addition, Oil-Dri® and vermiculite may have been used in some drums outside the expected time periods, or other absorbent materials may have been used.(P024A, P225A) These absorbent configurations are atypical but do not impact WMC or HWN assignments.

RF operations added Portland cement to IDCs 328, 335, and 338 wastes to absorb moisture, neutralize any residual nitric acid that might have been present, and reduce the potential for drum pressurization. These processed wastes were assigned IDC 376. While cement was an expected waste material of IDC 376, cement was not identified in some drums during RTR examination performed during the 3,100 m^3 Project.(P225A)

10.2.2 Boxes

Some of the waste was placed in boxes (e.g., IDCs 338, 360, 376, 490, and 491). Boxed wastes were sometimes wrapped in plastic before being placed in prepared waste boxes. Large waste items may have been transported to size reduction for processing. Size reduction included cutting and crushing HEPA filters. The wastes were either placed directly into prepared waste boxes or wrapped in plastic before being placed in a box, depending on contamination levels. Oil-Dri® absorbent was used when necessary to absorb liquids.(C053A, P024A P067A, P164A)

Each plywood box was lined with a polyethylene box bag. The bag was lined with a cardboard liner. After the box was filled with waste, the bag ends and sides were folded toward the box center and taped to seal the folded edges. Prior to 1972, uncoated plywood boxes were used. Coating plywood boxes with FRP began in 1972.(P024A)

SAND Type-2 and Type-1 boxes were used for filter debris waste. SANDboxes (Sandia boxes) are metal corrugated boxes used for packaging radioactively contaminated waste. Fiberboard (0.051 inch) and PVC (0.01 inch) liners were typically used.

10.3 Waste Characterization

Filters and insulation are characterized based on knowledge of the material, knowledge of the processes generating the waste, RTR, VE, and HGAS analysis. The wastes contain at least 50 percent (by volume) materials that meet the WAP criteria for classification as heterogeneous debris wastes.(P141A) Potential hazardous chemical constituents assigned to this group of IDCs by

AK documentation are identified in Table 10-3. PCBs are not expected to be present in the filter debris wastes in concentrations greater than 50 parts per million.[P105A, P393A] There is a potential that fluorescent light ballasts may be found within filter and/or insulation waste.

Table 10-3. Potential hazardous chemical constituents of filters and insulation waste.

IDC	Chemical Constituents[P015A, P016A, P307A, P368A]
328	None
335	1,1,1-trichloroethane, 1,1,2-trichloro-1,2,2-trifluoroethane, carbon tetrachloride, methylene chloride
338	1,1,1-trichloroethane, 1,1,2-trichloro-1,2,2-trifluoroethane, carbon tetrachloride, methylene chloride
360	None
376	1,1,1-trichloroethane, 1,1,2-trichloro-1,2,2-trifluoroethane, carbon tetrachloride, methylene chloride
490	1,1,1-trichloroethane, 1,1,2-trichloro-1,2,2-trifluoroethane, barium, carbon tetrachloride, chloroform, chromium, cyanide cleaning bath solutions, cyanide plating bath solutions, electroplating sludges, lead, methylene chloride, silver tetrachloroethylene, toluene, trichloroethylene
491	1,1,1-trichloroethane, 1,1,2-trichloro-1,2,2-trifluoroethane, carbon tetrachloride, methylene chloride

10.3.1 Radionuclides

Information about radionuclides common to all RF wastes is presented in Section 3.0 of this document. The radionuclides potentially contained in the soil wastes, and radioassay interferences, are as follows:[P024A]

- The radionuclides of concern for IDCs 328, 335, 338, 360, 376, and 490 are ^{238}Pu, ^{239}Pu, ^{240}Pu, ^{242}Pu, ^{233}U, ^{234}U, ^{238}U, and ^{241}Am.
- The two most prevalent radionuclides expected in the filter debris waste containers are ^{239}Pu and ^{240}Pu.
- The remaining WIPP-tracked radionuclides, ^{137}Cs and ^{90}Sr, are not expected to be present in measurable quantities.

Radioassay interferences may include polypropylene from Ful-Flo filters, cadmium or chromium from HEPA filter frames, aluminum foil used as a spacer between the folds of the filter media, and Nomex, which is an aromatic polyamide fiber used in HEPA filters at five to seven weight percent.[P035A, P052A]

The feed materials to the recovery and purification processes (container Prefixes 0001 and 0002) in Building 771 were impure plutonium residues that were processed to produce plutonium metal for use in the foundry; therefore, wastes generated will be contaminated primarily with WG Pu.[P052A, P163A, U059A] Filters containing recoverable amounts of plutonium

were processed in Building 771 by manually shaking the filter to remove loose particulates that were sent through recovery.(P024A, P061A) Wastes generated from Building 771 filter plenum maintenance were assigned container prefix 0009.(C184A, P052A) It was assumed that the wastes may contain any of the radionuclides processed in the building.

11.0 GLASS

This waste consists of glass materials generated by plutonium production, recovery, and purification; laboratory operations; waste treatment; maintenance; and R&D activities associated with plutonium operations. The waste was generated in Buildings 371, 374, 559, 707, 771, 774, 776, 777, and 779.(P012A, P083A)

Containers of this waste were characterized during the 3,100 m^3 Project and shipped to WIPP under CBFO-approved WSPF INW243.001.(P215A, P224A) Historic IDC descriptions and dates of generation for this waste in the AMWTP inventory are presented by IDC in Table 11-1.(P090A, P367A, P368A, P370A, U059A, U069A, U092, U128A)

Table 11-1. Glass waste in the AMWTP inventory.

IDC	Title	Dates of Generation[b]
440	Glass(P012A) Glass (except Raschig Rings)(P014A)	June 1971–February 1988
060	Glass	Prior to June 1971[a]

a. Two digit IDCs that may have been used prior to June 1971.(C267A)

b. Dates of generation are based on available shipping papers and may not reflect the actual inventory at INL due to incomplete records for waste received prior to 1973.

Item Description Code 440—Glass: This waste consists of glass generated by plutonium production, recovery, treatment, laboratory, and maintenance operations in Buildings 371, 374, 559, 707, 771, 774, 776, 777, and 779.(P012A, P083A) The materials may be glass ceramic, leaded glass, or quartz. Specific waste items may include glass sample vials, bottles, lead-taped sample vials, ion exchange columns, dissolver pots, light bulbs, laboratory glassware such as Pyrex flasks and beakers, glovebox windows (glass, Plexiglas, leaded glass), and crushed and ground glass.

Item Description Code 060—Glass: This waste consists of glass generated from the same processes as IDC 440 but was the original IDC designator used at RF prior to June 1971. (C267A)

Typical waste material parameters for glass waste containers, including packaging materials, are presented in Table 11-2.(P224A, P486A) RF waste management and inspection protocol allowed containers of waste to contain up to 10 percent of IDC wastes other than that assigned to the container.(P016A) Examples of these atypical items identified in IDC 440 waste containers include plastic bottles, rubber gaskets, Raschig rings, fiberglass, small quantities of liquid, pressurized containers, lead items (e.g., rubber gloves and aprons, tape, sheeting), metal items (e.g., light ballasts, hand tools, cans), mercury (possibly contained in fluorescent bulbs), miscellaneous iron- or aluminum-based metal items (e.g., cans, tools) and miscellaneous cellulosics (e.g., Fibre-paks, cardboard liners, filters, wood).(P001A, P009A, P012A, P015A, P024A, P052A, P224A, P486A)

Table 11-2. Typical waste material parameters for glass waste containers.

Typical Waste Material Parameters	Examples
Steel (packaging materials)	55-gallon drum
Plastics (packaging materials)	90-mil drum liner, O-ring bags, drum bags
Other Inorganic Materials	Glass, vermiculite, Oil-Dri®
Plastics (waste materials)	Polyethylene bags, polyethylene bottles

11.1 Waste Generation

Glass was generated by plutonium operations at the site. Except for details relevant only to this waste stream, these operations are discussed in Section 3.0.

Plutonium production consisted of operations directly associated with the manufacturing of plutonium metal parts including casting, rolling, forming, machining, and assembly processes. Buildings 707 and 777 were the primary weapons components production facilities at the site after the construction of Building 707 in 1972. Building 707 was constructed after the 1969 fire in Building 776, which shut down foundry and machining operations in that building.(P053A)

The foundry in Building 707 cast molten plutonium into classified components, subassemblies, and assemblies. Glass waste generated by production operations consisted primarily of items such as bottles and sample vials.(P083A)

Recovery operations in Building 771 used acid to dissolve solid materials containing plutonium. Glass waste generated by recovery and purification operations included items such as bottles, condensers, ion exchange columns, reaction vessels, and liners.(P083A)

Laboratory operations generated a majority of the glass waste. This waste included items such as reagent bottles, vials, burettes, pipettes, ceramics, syringes, stirrers, watch glasses, funnels, beakers, flasks, sample cells, ampules, plasma torches, and other glass laboratory equipment and instruments.(P083A)

The R&D activities may have generated any of the glass items generated by similar production, recovery, and purification operations at the site. From approximately 1959 to the mid-1970s, RF was involved in Project Plowshare. The mission of the program was to develop technology for using nuclear explosives for peaceful applications such as excavation and uncovering of deep mineral deposits. Materials used in the manufacturing of these components were the same as those used in the production buildings.(P053A)

Glass waste generated by waste treatment operations consisted primarily of items such as bottles and other broken containers.(P083A) Glass waste generated by maintenance activities included leaded glass glovebox windows, scrubber vessels, inspection ports from fume scrubber towers, and fluorescent and incandescent light bulbs.

11.2 Waste Packaging

11.2.1 Drums

Glass was either loaded directly into a lined 55-gallon drum or double-bagged out of the glovebox line. To increase loading, many glass items were broken prior to packaging. Light bulbs may have been crushed prior to disposal. The waste may also have been collected in metal cans, polyethylene bottles, or Fibre-Paks prior to placement in a lined 55-gallon drum.(P012A, P024A)

Depending on waste packaging requirements at the time, several combinations of bags and liners were used to prepare 55-gallon drums for shipment. From 1970 to 1972, waste drums were lined with one or two polyethylene drum bags. Cardboard liners might also have been used to line the inner drum bag. Use of the 90-mil rigid polyethylene liner began in 1972.(P024A) The rigid liner was placed in each drum and lined with one polyethylene round bottom drum liner or one or two polyethylene drum bags.(P008A, P012A, P016A, P024A, P063A, P064A) A PVC O-ring bag and a polyethylene bag were used if the drum was attached to the glovebox.(P016A) A fiberboard liner and discs may also have been used between the waste packages and the drum liners for puncture protection.(P008A, P012A, P016A, P063A, P064A)

Varying combinations of inner bags and liners in glass waste containers have been determined during RTR/VE. Some drums may not contain a 90–mil rigid liner and some drums may not contain drum bags.

After drums were inspected, one to two quarts of absorbent material (Oil-Dri®) were placed on the top of the outer sealed polyethylene drum bag. This procedure changed in February 1982 when vermiculite was used to fill the space between the outer, sealed polyethylene drum bag and the top of the 90-mil rigid liner. The quantity of vermiculite varied from three to twelve pounds according to the amount of waste contained in each drum.(P024A) During RTR examinations of glass waste containers, quantities of absorbent were identified that varied significantly from expected quantities, and some drums contained no absorbent. In addition, Oil-Dri® and vermiculite may have been used in some drums outside the expected time periods noted above.(P224A)

When a drum was full, the drum bag(s) were typically twisted and taped closed. However, some bags were twisted and tied closed, or closed with a plastic tie and folded and taped, as evidenced by RTR/VE. The lid was then secured with a bolted ring, and a tamper-indicating device was attached to the drum.(P012A, P016A, P024A, P486A)

11.2.2 Boxes

RF packaged some glass waste in boxes rather than drums. Specifically, there are 25 boxes of IDC 440 waste identified in the TWMIS database.(C289A, U094A) The boxes used were metal corrugated Sandia boxes with a volume of 3.17 cubic meters and were typically lined with a fiberboard liner for puncture resistance and a PVC liner for contamination control.(C289A, P372A)

There is no AK that specifically describes glass waste packaged in boxes; however, it is assumed that boxed waste was generated from the same or similar processes and does not contain chemical or radiological constituents different than the waste packaged in drums. Waste material parameters identified for waste drums are also applicable to boxed waste.

11.3 Waste Characterization

Glass debris is characterized as mixed TRU waste based on knowledge of the material, knowledge of the processes generating the waste, RTR/VE, and HGAS analysis. This waste contains at least 50 percent by volume materials that meet the WAP criteria for classification as debris and is, therefore, a heterogeneous waste.(P141A) Potential hazardous chemical constituents assigned to this group of IDCs by AK documentation are identified in Table 11-3. PCBs are not expected to be present in the majority of the glass debris waste containers at concentrations greater than 50 parts per million. Fluorescent light ballasts have been identified by RTR/VE in a small percentage of glass waste containers and the ballasts are assumed to contain greater than 50 parts per million PCBs. During the 3,100 m^3 Project, any container identified with light ballasts was not shipped to WIPP.(C198A, P224A) Since then, drums containing PCB items are managed and shipped in accordance with the WIPP WAC.(P368A, P407A, P433A)

Table 11-3. Potential hazardous chemical constituents of glass waste.

IDC	Chemical Constituents(P015A, P016A, P368A)
440 060	1,1,1-trichloroethane, 1,1,2-trichloro-1,2,2-trifluoroethane, barium, benzene, carbon disulfide, carbon tetrachloride, chloroform, lead, mercury, methylene chloride, tetrachloroethylene, toluene, trichloroethylene

11.3.1 Radionuclides

The radionuclides potentially contained in the combustible and plastic wastes, as well as the chemical form of radionuclide contaminants and radioassay interferences, are described in this section. Information about radionuclides common to all RF wastes is presented in Section 3.0.

- The radionuclides of concern for IDC 440 are ^{238}Pu, ^{239}Pu, ^{240}Pu, ^{242}Pu, ^{233}U, ^{234}U, ^{238}U, and ^{241}Am.
- The two most prevalent radionuclides expected in the filter debris waste containers are ^{239}Pu and ^{240}Pu.
- The remaining WIPP-tracked radionuclides, ^{137}Cs and ^{90}Sr, are not expected to be present in measurable quantities.

Radioassay interferences may include polypropylene from Ful-Flo filters, cadmium or chromium from HEPA filter frames, aluminum foil used as a spacer between the folds of the filter media, and Nomex, which is an aromatic polyamide fiber used in HEPA filters at five to seven weight percent.(P035A, P052A)

12.0 GRAPHITE

This waste group consists of graphite generated by production, recovery, laboratory, size reduction, and R&D activities associated with plutonium operations. Graphite wastes include broken molds, furnace liners and spacers, graphite pieces ranging from chunks to pieces, and some laboratory equipment.(P052A, U032A) The waste was generated in Buildings 371, 559, 707, 771, 776, and 779.(P012A)

Graphite wastes were characterized during the 3,100 m^3 Project under two CBFO approved WSPFs: INW276.003 for non-hazardous TRU graphite waste (IDC 300) and INW276.004 for hazardous TRU graphite wastes (IDCs 300, 301, 303, and 312).(P205A, P211A, P212A, P221A) Two other WSPFs (INW276.001 and INW276.002) were also submitted by the 3,100 m^3 Project to CBFO for the non-hazardous graphite debris waste.(C005A, P205A, P289A) Graphite scarfings (IDC 310) were not included in these earlier WSPFs. Historic IDC descriptions and dates of generation for this waste in the AMWTP inventory are presented by IDC in Table 12-1.(P090A, P367A, P368A, P370A, U059A, U069A, U092, U128A)

Table 12-1. Graphite waste in the AMWTP inventory.

IDC	Title	Dates of Generation[c]
300	Graphite Molds(P012A) Graphite Molds(P012A) (Bldg. 707 casting operations only)	September 1970–June 1988[a]
301	Graphite Cores(P014A) Graphite Debris(P032A)	December 1972–February 1985
303	Scarfed Graphite Chunks(P012A)	March 1985–April 1988
310	Graphite Scarfings(P024A) Graphite, Pulverized or Fines(P014A) Graphite Scarfings and Fines(P032A)	May 1972–December 1983
312	Coarse Graphite(P012A)	November 1983–June 1984
070	Graphite	Prior to June 1971[b]

a. Does not include containers with prefix RD94 with pack dates of September 1994.

b. Two digit IDCs that may have been used prior to June 1971.(C267A)

c. Dates of generation are based on available shipping papers and may not reflect the actual inventory at INL due to incomplete records for waste received prior to 1973.

Item Description Code 300—Graphite Molds: This waste consists of graphite generated in Buildings 371, 559, 707, 771, and 776. Graphite items include molds from plutonium casting operations, spacers and liners used in high-temperature furnaces and ovens, electrodes, and pieces and chunks generated during mold cleaning.(P012A, P067A) Although the waste is primarily molds from plutonium casting operations in Building 707, limited amounts of graphite molds were periodically generated by various R&D projects.(P016A, P024A, P052A) IDC 300 may also include graphite electrodes from Building 559 laboratory operations.(P067A) Graphite contaminated with plutonium above the EDL was sent for recovery in Buildings 371 or 771. Some surgical gloves may also be included in the waste.(P024A)

***Item Description Code 301—Graphite Debris*:** This waste consists of graphite cores generated in Buildings 371, 559, and 707.(P024A, U092A, U059A) Graphite cores were part of a classified shaped mold generated primarily by plutonium casting operations in Building 707.(P024A, P052A, P060A) During the casting of plutonium, classified shapes were sorted from unclassified shapes. Graphite cores contaminated with plutonium above the EDL were sent for plutonium recovery.(P024A) Prior to 1984, graphite cores were destroyed in Building 776 to render the material unclassified.(P052A) The pieces of graphite that remained after declassification were assigned IDC 310 or 312. The graphite from Building 559 may be graphite electrodes which have been misidentified as IDC 301.(C074A) Classified waste should not have been shipped to the INL and can be verified by RTR.(C074A, C077A)

Item Description Code 303—Scarfed Graphite Chunks: This waste consists of pieces of broken graphite mold generated from the mechanical cleaning (scarfing) of graphite molds and cores. Scarfing of the mold surface removed most of the mold coating (calcium fluoride) and plutonium contamination.(P052A)

Item Description Code 310—Graphite Scarfings: This waste consists of graphite scarfings and fines generated from the mechanical cleaning (scarfing) of graphite molds. The small pieces and fines are coated with calcium fluoride and plutonium.(P052A) The fines were removed from larger chunks by screening.(P060A) Graphite scarfings waste was previously identified by a WMC for homogeneous solid waste (S3110) and not a debris waste as were the other IDCs in this waste group. However, the definition of debris was later clarified and determined to apply to the IDC 310 waste.(C204A)

Item Description Code 312—Coarse Graphite: This waste consists of odd sized and shaped chunks of graphite generated from the mechanical cleaning (scarfing) of graphite molds.(P038A, P052A) The graphite is coated with calcium fluoride and plutonium.(P038A)

Item Description Code 070—Graphite: This waste consists of graphite generated from the same processes as IDC 300 but was the original IDC designator used at RF prior to June 1971.(C267A)

Typical waste material parameters for graphite waste containers, including typical packaging materials, are presented in Table 12-2.(P221A) RF waste management and inspection protocol allowed containers of wastes to contain up to 10 percent of another IDC other than that assigned to the container.(P016A) Miscellaneous items identified during previous VE activities at RF included a few metal bolts, some aluminum shavings, paper clips, bungee cords, and blotter paper.(P015A, U011A) Confirmation activities by the 3,100 m^3 Project determined that the bungee cords are actually elastic bands, and the blotter paper was actually part of the cardboard liner packaging.(P205A, P221A)

Items identified in containers during the 3,100 m^3 Project examinations of the graphite debris waste are listed in detail in INEL-96/0280 and include a variety of combustible, glass, iron-based metals, and inorganic liquids.(P368A) One drum of graphite cores (IDC 301) contained a few metal bolts and some aluminum shavings.(P015A) The AK confirmation activities also

identified numerous items in a small percentage of the graphite debris waste containers including a 90-mil rigid liner lid; empty plastic bags and bottles; plastic spacers, inserts, and tubing; thermocouples; lead items; metal hooks, clips, caps, and a locking ring; razor blade, knife, bolts; elastic sleeving; surgical gloves; coveralls; paint brush; cardboard roll end; empty spool of tape; and a wooden handled brush.(P205A, P221A, P407A)

Table 12-2. Typical waste material parameters for graphite waste containers.

Typical Waste Material Parameter	Examples
Steel (packaging materials)	55-gallon drum
Plastics (packaging materials)	90-mil drum liner, O-ring bags, drum bags
Other Inorganic Materials	Graphite molds, vermiculite, Oil-Dri®
Cellulosics	Cardboard liner, Fibre-Pak
Iron-based Metals/Alloys	One-gallon paint cans used as inner containers
Rubber	Elastic bands from bag-out ends
Plastics (waste materials)	Small polyethylene bags, one-gallon polyethylene bottles

12.1 Waste Generation

Graphite molds and cores were generated by plutonium operations at the site. Except for details relevant only to this waste stream, these operations are discussed in Section 3.0.

The foundry in Building 707 cast molten plutonium into classified components, subassemblies, and assemblies. Molds were cut from solid blocks, logs, or slabs of graphite, which had high mechanical strength. The working surfaces of the mold were coated with calcium fluoride.(P016A) Molten plutonium metal was cast in graphite molds as the initial step in weapons parts production. Plutonium metal was melted within a tantalum crucible and poured into the graphite mold. The castings were removed and allowed to cool, and the molds and castings were separated. If a mold was going to be reused, it was mechanically cleaned to remove the adhered plutonium, which generated graphite scarfings. Once a mold had been used three times or was no longer usable, it was discarded as IDC 300 or 301.(P059A, P060A)

Graphite molds containing plutonium above the EDL were cleaned by a mechanical scraping or scarfing to remove the plutonium metal, which had adhered to the surface of the mold. This process also removed the calcium fluoride coating. Scarfing operations have occurred in Buildings 371, 707, 771, and 777. The process of scarfing generated IDCs 300, 301, 303, 310, and 312. Scarfed graphite chunks (IDC 303) were generated from the pieces of the mold remaining after the plutonium-contaminated surface had been scarfed. These pieces of graphite are typically one inch in diameter or larger. IDC 303 was created in early 1985.(C005A) Prior to this, scarfed graphite chunks were assigned IDC 300 or 301.(C177A) The material, which was mechanically removed from the mold, was identified as IDC 310 or 312 depending on size. Graphite scarfing and fines (IDC 310) consisted of granular and fine graphite particles. Coarse graphite (IDC 312) consisted of pieces, which were less than one inch in diameter but were

larger than the fines. The graphite scarfings and fines were separated from the coarse graphite using a sifting screen.(C061A, P035A, P059A, P097A, P104A)

Emission spectroscopy was used in Building 559 for the determination of rare earth metals and impurities in various metal samples. The samples were leached in hydrochloric acid and dried in an oven to a low density oxide. The oxide was mixed with sodium fluoride and packed into a graphite electrode that was fired with an arc. The electrodes were removed from the spectrometer when their integrity was lost. Graphite electrodes were assigned IDC 300.(P067A)

The Building 559 analytical laboratory also generated one drum (RF002900629) of graphite cores (IDC 301) in 1983. There were no operations in Building 559 that generated or processed IDC 301, and it is suspected that this drum may contain graphite electrodes from emission spectroscopy analysis. There are no classification issues with graphite electrodes.(C067A)

Graphite molds were generated from R&D operations in Buildings 771 and 779.(P061A, P062A, U032A) Plutonium metallurgy in Building 771 cast plutonium alloys in furnaces using graphite crucibles. Solvents were not used in this process.(P061A) Experimental casting in Building 779 tested metal compatibilities with various substrates. Plutonium and non-nuclear metals were heated in a furnace and cast into graphite molds. Freon was used to clean the castings.(P062A) These operations simulated casting operations in Building 707.(P061A, P062A)

Prior to 1984, graphite cores were destroyed in Building 776 to render them unclassified.(P052A) The graphite cores were broken into pieces no larger than one inch.(C066A) After being assayed, drums containing plutonium below the EDL were sent to Building 776 for repackaging or inspection. A drum would have to be repackaged if the plutonium content was too high (greater than 200 grams), or if the net weight of the drum exceeded 200 pounds.(P024A) The declassified graphite cores were also repackaged.(P001A) After repackaging, drums were identified as being generated from Building 776; therefore, Building 776 could be identified as the generation building for any of the graphite wastes.

12.2 Waste Packaging

12.2.1 Drums

Graphite (IDCs 300 and 301) was placed directly into a lined 55-gallon drum or bagged out of the glovebox line in two PVC or polyethylene bags. Graphite pieces and chunks (IDCs 303 and 312) were typically placed in Fibre-Paks, which were bagged out of the line.(P012A, P024A) Graphite chunks (IDC 312) may have also been collected in one-half or one-gallon polyethylene bottles.(P015A, P022A) Graphite scarfings (IDC 310) were collected in one-gallon polyethylene bottles before being bagged out of the glovebox line.(P024A) After removal from the glovebox, the waste was placed in a lined 55-gallon drum.(P012A, P024A)

Depending on waste packaging requirements at the time, several combinations of bags and liners were used to prepare 55-gallon drums for shipment. From 1970 to 1972, waste drums were lined with one or two polyethylene drum bags. Cardboard liners might also have been used to line the inner drum bag. Use of the 90-mil rigid polyethylene liner began in 1972.(P024A) A

cardboard liner may have been used, in addition to, or in lieu of, the 90-mil rigid polyethylene liner. The rigid liner was placed in each drum and lined with one polyethylene round bottom drum liner or two polyethylene drum bags.[P008A, P012A, P016A, P024A, P063A, P064A] A PVC O-ring bag and a polyethylene bag were used if the drum was attached to the glovebox.[P016A] A fiberboard liner and discs may also have been used between the waste packages and the drum liners for puncture protection.[P008A, P012A, P016A, P063A, P064A] When a drum was full, the drum liners were twisted and taped closed. The lid was secured with a bolted ring, and a tamper indicating device was attached to the drum.[P012A, P016A, P024A]

During the 3,100 m^3 Project, it was determined that for IDCs 300, 301, 303, and 312 waste several combinations of drum bags, poly bags, and O-ring bags may have been used to package the wastes. Any combination of these plastic bags, provided that four layers of containment were not exceeded, did not impact acceptability of the drums. Drums that exceeded the TRUPACT allowed containment layers were flagged for treatment in TRIPS.[P221A]

After drums were inspected, one to two quarts of absorbent material (Oil-Dri®) were placed on the top of the outer, sealed polyethylene drum bag. This procedure changed in February 1982 when vermiculite was used to fill the space between the outer, sealed polyethylene drum bag and the top of the 90-mil rigid liner. The quantity of vermiculite varied from three to twelve pounds according to the amount of waste contained in each drum.[P024A] During RTR examinations of RF waste containers, quantities of absorbent were identified that varied significantly from expected quantities, and some drums contained no absorbent. In addition, Oil-Dri® and vermiculite may have been used in some drums outside the expected time periods, or other absorbent materials may have been used.[P221A]

12.2.2 Boxes

There is no documentation that IDC 300, 301, 303, 310, or 312 were packaged in boxes.

12.3 Waste Characterization

Graphite wastes were characterized based on knowledge of the material and of the processes generating the wastes, RTR review of the wastes, VE, and HGAS analyses results. Graphite wastes (IDCs 300, 301, 303, and 312) contain an estimated 80 percent (by volume) or more inorganic non-metal debris that meet the WAP criteria for classification as debris and are classified as heterogeneous wastes.[C204A, P141A] Graphite scarfings (IDC 310) waste was identified by a WMC for a homogeneous solid waste (S3110) and not a debris waste as were the other IDCs in this waste group, and was not included in either of the WSPFs (INW276.003 and INW276.004) developed by the 3,100 m^3 Project.[P205A, P211A] However, the definition of debris was reevaluated and it was determined that IDC 310 belonged to an S5000 WMC.[C204A] Potential hazardous chemical constituents assigned to this group of IDCs by AK documentation are identified in Table 12-3. PCBs are not expected to be present in the graphite debris waste stream in concentrations greater than 50 parts per million. If any containers are identified during RTR/VE as containing PCB items (e.g., light ballasts) greater than 50 parts per million, the drums containing the PCB items will be managed and shipped in accordance with the WIPP WAC.[P393A]

Table 12-3. Potential hazardous chemical constituents of graphite waste.

IDC	Chemical Constituents[P015A, P368A]
300 070	1,1-dichloroethylene, 1,1,1-trichloroethane, methylene chloride, lead, toluene, trichloroethylene
301	1,1-dichloroethylene, 1,1,1-trichloroethane, methylene chloride, lead, toluene, trichloroethylene
303	1,1-dichloroethylene, 1,1,1-trichloroethane, methylene chloride, lead, toluene, trichloroethylene
310	None
312	1,1-dichloroethylene, 1,1,1-trichloroethane, methylene chloride, lead, toluene, trichloroethylene

12.3.1 Radionuclides

The radionuclides potentially contained in the graphite waste are identified in the following sections. In addition, the matrix and other physical parameters that could affect radioassay results are summarized in Table 12-4. Information about radionuclides common to all RF wastes is presented in Section 3.0.

Table 12-4. Waste matrix evaluation.

Parameter	Results of Evaluation
Radionuclide form, particle size, and distribution	Plutonium metal and oxide will be present in the graphite waste.[P035A] In general, visible pieces of plutonium metal were removed from graphite molds prior to packaging.[P104A] However, small pieces of plutonium metal were identified in drums of graphite (IDC 300).[P015A] Review of RTR images of IDC 300 has shown that drums contain either scarfed graphite or unscarfed graphite. Source particle size in this waste range from finely divided in the scarfed graphite and impregnated on the surface of the molds to metal fines and shavings dispersed in the waste.[P154A]
Hydrogen content	The primary sources for hydrogen in graphite waste include fiberboard, PVC, and polyethylene liners, bags, and bottles (Section 12.2). In addition, trace concentrations of hydrocarbons have been detected in the headspace of graphite containers.[P033A] Moisture absorption should not be an issue, because neither graphite nor calcium fluoride (mold coating) are hygroscopic.[C181A]
Other interfering waste contaminants	The graphite material itself is a moderating material and can bias radioassay. Other contaminants include calcium fluoride mold coating and magnesium metal or oxide (plutonium impurity).[P035A]
Physical matrix parameters	If present in IDCs 300 or 301, the calcium and magnesium metal or oxide will be located on the inside mold surface; otherwise, the material is homogeneous.[P035A] Based on two samples of IDC 310, the particle size distribution of the graphite fines was less than 0.7 percent and 0.5 percent dispersible fines. The material in both containers sampled was essentially 100 percent fines.[C186A]

Radionuclide contamination in graphite waste from Building 707 will primarily consist of WG Pu from foundry, casting, and final assembly operations.(P052A, P053A) A small percentage of the waste from Building 707 may also contain ^{240}Am, ^{237}Np, and ^{238}Pu from blending of these nuclides with WG Pu for diagnostic tracers. Graphite molds used in plutonium production operations were also used for casting these plutonium alloys; however, processing of plutonium alloys was limited compared to plutonium.(C171A, C174A, C184A, C185A, P053A, P164A, P167A)

Graphite waste from recovery operations in Buildings 371 and 771 was generated from scarfing operations. This graphite originated in Building 707 and will contain primarily WG Pu, but could possibly contain the plutonium alloys. Graphite from R&D activities in Building 771 (container Prefixes 0042 and 0078) will contain WG-Pu and could contain a variety of other radionuclides including ^{237}Np, ^{233}U, and ^{242}Pu.(C185A, U059A)

Graphite from Building 559 consists of electrodes from emission spectroscopy analysis. This process analyzed WG Pu and EU metal and oxide samples from Building 707.(U073A)

The SRV in Building 776 conducted solid waste treatment, repackaging, and size reduction operations. The SRV was divided into two sides. One side was the airlock (container Prefixes 0025, 0040, 0041, and 0057) where repackaging was done. The other side (container Prefixes 0019 and 0026) was a drybox atmosphere where size reduction and solid waste treatment activities took place.(C175A, C184A, P067A, U059A) The repacked graphite containers have the potential to contain contaminated materials from any of the processes that generated graphite waste.(P067A, U077A)

Uranium-235 was detected in two drums of IDC 300 from Building 707 and six drums of IDC 303 from Building 371.(P115A) Uranium was not cast in Building 707; however, on one occasion in the mid-1980s, metal chips from machining of plutonium and EU in Building 777 were mistakenly briquetted in Building 707.(C184A)

13.0 MISCELLANEOUS HEELS

This waste group includes miscellaneous process residues (i.e., heels) generated by laboratory operations in Buildings 559 and 771, plutonium recovery operations in Buildings 771 and 776, and R&D activities in Building 779. Historic IDC descriptions and dates of generation for this waste in the AMWTP inventory are presented by IDC in Table 13-1.(P090A, P367A, P368A, P370A, U059A, U069A, U092, U128A)

Table 13-1. Miscellaneous heels waste in the AMWTP inventory.

IDC	Title	Dates of Generation[a]
311	Graphite Heels	March 1972–September 1976
361	Insulation Heel	June 1972
393	Sand, Slag, and Crucible Heels(C063A)	June 1976–October 1985

a. Dates of generation are based on available shipping papers and may not reflect the actual inventory at INL due to incomplete records for waste received prior to 1973.

Item Description Code 311—Graphite Heels: This waste is the remaining insoluble residue generated from leaching graphite scarfings with hot nitric acid.(P024A)

Item Description Code 361—Insulation Heel: This waste consists of insoluble insulation residue generated from an R&D plutonium recovery project for insulation contaminated with above-discard amounts of plutonium. The single waste drum was received in 1972.(P024A)

Item Description Code 393—Sand, Slag, and Crucible Heels: This waste consists of undissolved or precipitated calcium fluoride (slag), undissolved magnesium oxide sand and crucible heels remaining after pulverizing and leaching of sand, slag, and crucibles (IDC 392).(P016A, P024A, P061A) The waste may also contain trace amounts of aluminum nitrate and aluminum fluoride. The actinides remaining in the heel will be in the form of fluorides and oxides; predominantly fluorides.(P035A)

Potential waste material parameters for miscellaneous heels waste containers, including typical packaging materials, are presented in Table 13-2. RF waste management and inspection protocol allowed containers of wastes to contain up to 10 percent of another IDC other than that assigned to the container.(P016A)

Table 13-2. Potential waste material parameters for miscellaneous heels waste containers.

Potential Waste Material Parameters	Examples
Steel (packaging materials)	55-gallon drum
Plastics (packaging materials)	90-mil drum liner, O-ring bags, drum bags
Other Inorganic Materials	Heel materials, vermiculite, Oil-Dri®
Cellulosics	Cardboard liner
Iron-based Metals/Alloys	Volrath cans and 1-gallon paint cans used as inner containers
Plastics (waste materials)	1-gallon polyethylene bottles, small polyethylene bags

13.1 Waste Generation

The graphite heel (IDC 311) and insulation heel (IDC 361) wastes were generated primarily during plutonium recovery operations in Building 771. The insulation heel is the insoluble residue (heel) generated from recovery of plutonium from contaminated filter and insulation media contaminated. The contaminated media were contacted with hydrofluoric acid, dried on a hot plate, and pulverized. The pulverized insulation was then contacted with nitric acid and filtered. The insoluble residue or heel that collected on the filter was dried and packaged.(P024A)

The single box of IDC 361 waste received at the INL was generated by the size reduction facility (Building 776) in 1972. The actual contents of the box may be graphite molds and other foundry supplies from Building 776 generated during cleanup operations after the 1969 fire. Specific information is not available.(P024A)

Unpulverized sand, slag, and crucible heels (IDC 393) waste was generated when the crucible and reaction by-products from the reduction and button break-out process were not separated prior to disposal.(P052A) Beginning in 1985, sand, slag, and crucible heels (IDC 393) were immobilized into a solid monolith with Portland cement and water.(C050A, P016A) The cemented sand, slag, and crucible heels were assigned IDC 817.(P016A) The residue dissolution process flowchart is presented in Figure 13-1.

Plutonium recovery and size reduction operations are described in detail in Section 3.0.

13.2 Waste Packaging

13.2.1 Drums

Graphite heels (IDC 311) were packaged in one-gallon polyethylene bottles. Each bottle was bagged out of the glovebox into a PVC bag, which was then placed into a polyethylene bag. The bags were sealed with tape. Each bottle was assayed for plutonium content and then placed in a prepared 55-gallon waste drum, depending on assay results. Approximately 15 to 20 bottles fit into a drum.(P024A)

The insulation heel waste (IDC 361) was packaged in 8801 or 8802 Volrath stainless steel cans and/or half- or one-gallon polyethylene bottles. Each can or bottle was assayed for plutonium content at Building 771 before placement in a prepared 55-gallon waste drum.(P024A)

Sand, slag, and crucible heels (IDC 393) were packaged in half- or one-gallon polyethylene bottles. The polyethylene bottles were double-bagged out of the glovebox in PVC or polyethylene bags, which were sealed with tape. Each can or bottle was assayed for plutonium content. The packages were then placed in a 55-gallon drum. Approximately 15 to 25 one-gallon containers and up to 30 half-gallon containers were placed in a drum depending on assay.(P012A, P024A)

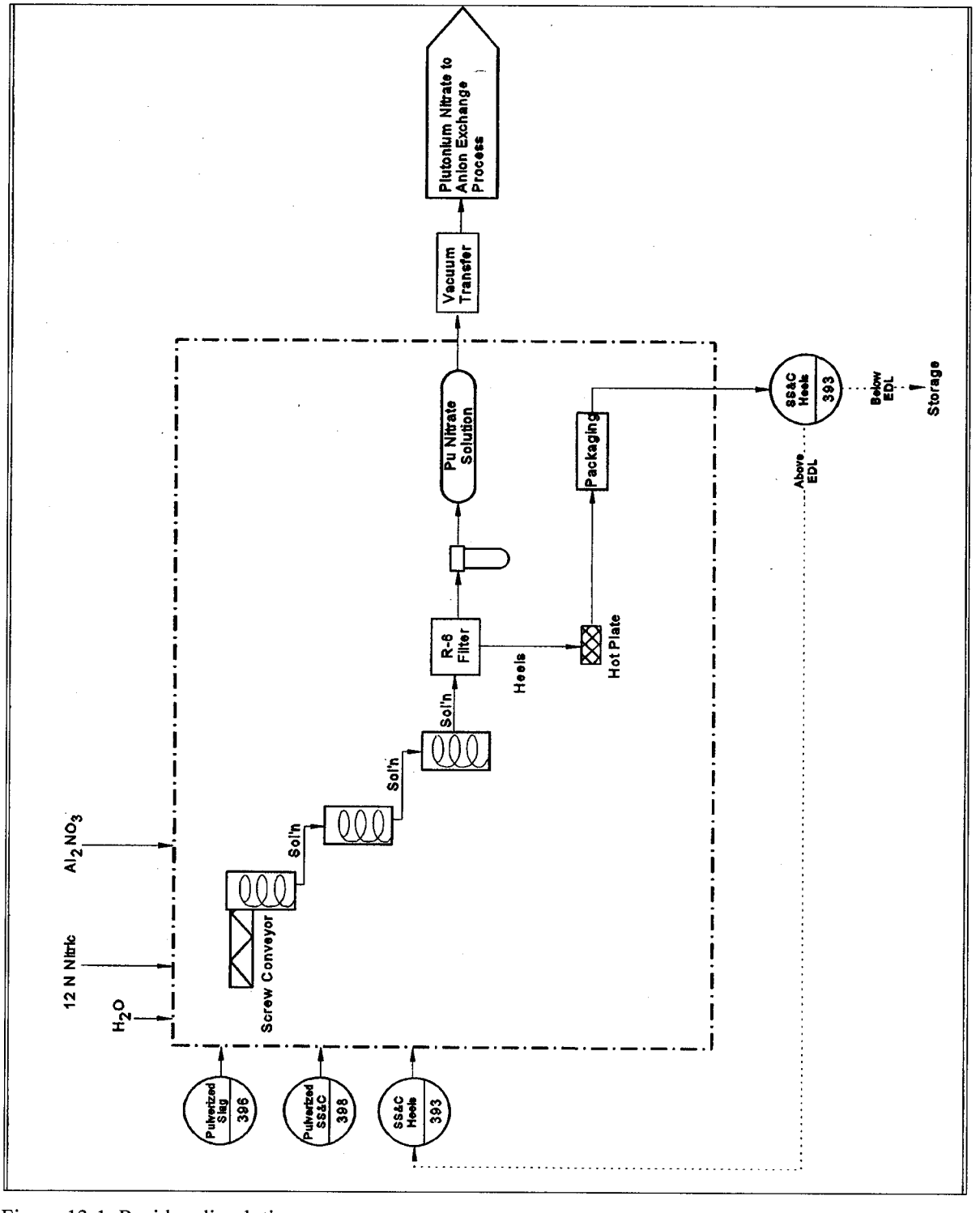

Figure 13-1. Residue dissolution process.

Depending on waste packaging requirements at the time, several combinations of bags and liners were used to prepare 55-gallon drums for shipment. Use of 90-mil rigid polyethylene liners began in 1972, but individual drums may or may not include them.(P024A) The rigid liner was placed in each drum and lined with one polyethylene round bottom drum liner or two polyethylene drum bags.(P008A, P012A, P024A, P063A, P064A) A fiberboard liner and discs may also have been used between the waste and the drum liners.(P012A) When a drum was full, the drum liners were twisted and taped closed, the lid was secured with a bolted ring, and a tamper indicating device was attached to the drum.(P001A, P012A, P024A)

After drums were inspected, one to two quarts of absorbent material (Oil-Dri®) was placed on top of the outer, sealed polyethylene drum bag. This procedure was changed in February 1982 when vermiculite was used to fill the space between the outer, sealed polyethylene drum bag and the top of the 90-mil rigid liner. The quantity of vermiculite varied from three to twelve pounds according to the amount of waste contained in each drum.(P024A) During RTR examinations of RF waste containers, quantities of absorbent were identified that varied significantly from expected quantities, and some drums contained no absorbent. In addition, Oil-Dri® and vermiculite may have been used in some drums outside the expected time periods, or other absorbent materials may have been used.(P221A)

13.2.2 Boxes

From 1970-72 each plywood waste box was lined with a polyethylene box bag and the bag was then lined with a cardboard liner. Coating plywood boxes with FRP began in 1972. After the box was filled with waste, the bag ends and sides were folded toward the box center, and tape was used to seal the folded edges.(P024A)

13.3 Waste Characterization

Miscellaneous heels are characterized based on knowledge of the material and knowledge of the processes generating the waste. This waste is at least 50 percent (by volume) inorganic particulates and is classified as a homogeneous waste.(P141A) Potential hazardous chemical constituents assigned to this group of IDCs by AK documentation are identified in Table 13-3. There is no evidence of heel wastes with PCBs at concentrations greater than 50 parts per million in the AMWTP inventory. Items that contain PCBs (e.g., light ballasts) are not expected to be present in the majority of miscellaneous heels waste containers.(P393A)

Table 13-3. Potential hazardous chemical constituents of miscellaneous heels waste.

IDC	Chemical Constituents(P016A, P024A, P368A)
311	None
361	None
393	None

13.3.1 Radionuclides

Information about radionuclides common to all RF wastes is presented in Section 3.0 of this document. The radionuclides potentially contained in the miscellaneous heel waste, and radioassay interferences, are as follows:

- The radionuclides of concern for IDCs 311 and 361 are ^{238}Pu, ^{239}Pu, ^{240}Pu, ^{242}Pu, ^{233}U, ^{234}U, ^{238}U, and ^{241}Am.
- Sand, Slag, and Crucible Heels (IDC 393) were generated from recovery of plutonium from sand, slag, and crucible wastes and radionuclide contamination will consist of WG Pu only.(P035A, P052A)
- The two most prevalent radionuclides in the miscellaneous heel wastes are ^{239}Pu and ^{240}Pu.
- Uranium-235 and ^{238}U may also be present in some waste containers depending on the relative mixture of WG Pu, EU, and DU in the waste.(P024A)
- The remaining WIPP-tracked radionuclides, ^{137}Cs and ^{90}Sr, are not expected to be present in measurable quantities in miscellaneous heel waste.

IDC 393 wastes may contain undissolved or precipitated calcium fluoride (slag) and undissolved magnesium oxide sand and crucible remaining after the waste had been pulverized and leached. The waste may also contain trace amounts of aluminum nitrate and aluminum fluoride.(P035A)

Due to the potential variability of the miscellaneous heels wastes (IDCs 311, 361, and 393), specific identification of the radionuclide form, particle size, and distribution, interfering waste contaminants, and physical matrix parameters has not been determined. The only exception to this is the assumption that hydrogen is present due to degradation of the plastic packaging materials.

14.0 FIRE BRICK DEBRIS

This waste group includes fire brick and coarse fire brick generated by the plutonium recovery incinerator in Building 771 and the FBI in Building 776.

Historic IDC descriptions and dates of generation for this waste in the AMWTP inventory are presented by IDC in Table 14-1.[P090A, P367A, P368A, P370A, U059A, U069A, U092, U128A] Some of the fire brick wastes described in this section was characterized under INW161.001, a CBFO-approved WSPF, for containers shipped to the WIPP facility.[P306A, P286A, P287A, P288A, P368A] The AMWTP has characterized fire brick under CBFO-approved WSPF BN 161.[P610A]

Table 14-1. Fire brick debris waste in the AMWTP inventory.

IDC	Title	Dates of Generation[a]
371	Fire Brick	May 1971–February 1986
377	Coarse Fire Brick	March 1985–June 1987

a. Dates of generation are based on available shipping papers and may not reflect the actual inventory at INL due to incomplete records for waste received prior to 1973.

This waste consists of fire brick, which is an insulating material made of high-density refractory clay (primarily an alumina ceramic material) that was used to line plutonium processing furnaces and incinerators.[P001A, P016A, P032A, P035A] Fire brick debris was generated during maintenance on the plutonium recovery incinerator which operated within Building 771, cleanup from a fire which occurred in Building 776 in 1969, and repackaging in Building 771 of fire brick from maintenance on the Building 771 plutonium recovery incinerator. The construction debris is primarily in the form of cinderblocks and construction brick. Up to 10 percent of other debris material (i.e., rags, wipes, paper, gloves, plastic, mortar, concrete, and wood) may be included as a result of packaging and repackaging of fire brick waste within Buildings 771 and 776.[P610A] Fire brick (IDCs 371 and 377), ash (IDC 420), and soot (IDC 422) wastes were generated during incinerator stripout operations.[P016A, P052A] Fire brick (IDCs 371 and 377), which lined plutonium processing furnaces and incinerators, was generated during maintenance operations. After the fire brick was removed, it was subjected to a mechanical scarfing process to remove plutonium-bearing surface layers.[P016A, P037A, P117A]

Item Description Code 371—Fire Brick: This waste consists primarily of incinerator fire brick from the plutonium recovery incinerator.[P024A, P037A, P052A, D048A] Drums of IDC 371 generated from 1971 to 1973 may contain pieces of construction bricks, cinder blocks, and fire brick from the plutonium recovery incinerator and from cleanup of the 1969 fire.[P368A]

Item Description Code 377—Coarse Fire Brick: This waste consists of coarse fire brick which is fire brick larger than one-quarter inch in diameter and smaller than one inch in diameter.[P032A, P368A] IDC 377 may also include cinder block and construction brick pieces of the same size.[P024A, P368A]

Typical waste material parameters, including packaging materials, for fire brick debris wastes are presented in Table 14-2.(P222A, P368A, P610A) RF waste management and inspection protocol allowed containers of wastes to contain up to 10 percent of an IDC other than that assigned to the container.(P016A) RTR observations of fire brick waste have identified gloves, rags, paper, cardboard liners, Fibre-paks, fiberboard liners and discs, tape, plastic, wipes, various metal wastes, and sealed, rigid inner containers greater than four liters.

Items identified in containers during 3,100 m^3 Project examinations of fire brick debris waste are listed in detail in INEL-96/2080(P368A) and include inorganic liquids, filters (aluminum and cellulosics), light ballasts, and rubber. The VE of some of the containers revealed several items. Surgical gloves, asbestos insulation, foil, PVC and polyethylene bags, and a thermocouple were found in IDC 371 drums.(P015A)

Table 14-2. Typical waste material parameters for fire brick debris waste containers.

Typical Waste Material Parameter	Examples
Steel (packaging materials)	55-gallon drum
Plastics (packaging materials)	90-mil drum liner, O-ring bags, drum bags
Other Inorganic Materials	Fire brick, construction bricks, cinder blocks, and absorbents (e.g., Oil-Dri®, vermiculite)
Cellulosics	Cardboard liner, Fibre-Paks, fiberboard liner and discs
Plastics (waste materials)	Small poly bags

14.1 Waste Generation

Fire brick debris was generated during maintenance on the plutonium recovery incinerator which operated within Building 771, cleanup from a fire which occurred in Building 776 in 1969, and repackaging in Building 771 of fire brick from maintenance on the Building 771 plutonium recovery incinerator.(P012A, P016A, P024A, P061A, P078A, P490A, P368A)

INEL-96/0280 discussed TRU fire brick generated in Building 371 during strip-out of the LSA and HSA incinerators. An evaluation of applicable drum prefix numbers and operational activities for waste associated with this building showed that that TRU fire brick was not shipped to the INL from this building.(D048A)

14.1.1 Plutonium Recovery Incinerator

The plutonium recovery incinerator in Building 771 was constructed for two main purposes. The first was to reduce the volume of solid combustible wastes to reduce storage costs. The second was to generate an ash from which actinides, primarily plutonium and americium, could be recovered.(U047A) The incineration system comprised a multi-chamber, refractory-lined firebox; caustic scrubber system; dedicated vacuum system; heat exchangers; various tanks, pipes, and valves; and a filter plenum.(P061A, P368A)

Combustible wastes (primarily IDCs 330, 331, 336, and 337) were received from production processes in Buildings 371, 707, 771, 776, 777, and 779.(P016A, P052A, P368A) Combustibles fed to the incinerator included paper, PVC and polystyrene bags, polypropylene and Ful-Flo filters, surgical gloves, PVC maintenance tents, and various types of sludge. The radioactively contaminated materials entered the glovebox from the drum hoist and bag-in area and were hand-sorted to segregate the combustibles. Non-combustibles, such as metal or glass wastes, were removed from the glovebox.(P052A, P061A, P368A)

The fire brick debris waste that was generated during maintenance operations to replace the fire brick in the plutonium recovery incinerator in Building 771 was made of high-density refractory clay (primarily alumina ceramic material). Spent fire brick was subjected to a mechanical scarfing process to remove plutonium-bearing surface layers. The waste remaining after scarfing was labeled IDC 377.(P610A)

14.1.2 Fire Cleanup and Waste Repackaging

Fire brick generated by the plutonium recovery incinerator and the fire cleanup was repackaged in Building 776. During the fire cleanup activities, construction debris (primarily cinderblocks and construction brick) was generated. Also, minor amounts of combustible debris (rags, wipes, paper, gloves, and plastic), may be included with the fire brick waste as well as mortar, concrete, and wood.(P610A)

14.2 Waste Packaging

14.2.1 Drums

From 1971 to 1973, fire brick wastes (IDCs 371 and 377) were packaged by three different methods: double-bagged and placed into Fibre-Paks (two Fibre-Paks fit into a 55-gallon drum), double-bagged and placed into a 55-gallon drum, or placed directly into a 55-gallon drum. The plastic bags were sealed with tape prior to placement in a Fibre-Pak or drum. After 1973, fire brick was double-bagged and packaged in Fibre-Paks exclusively.(P024A, P368A)

Depending on waste packaging requirements at the time, several combinations of bags and liners were used to prepare 55-gallon drums for shipment. From 1970 to 1972, waste drums were lined with one or two polyethylene drum bags. During RTR examinations of RF waste containers, quantities of absorbent were identified that varied significantly from expected quantities, and some drums contained no absorbent. In addition, Oil-Dri® and vermiculite may have been used.(P221A) Cardboard liners might have been used to line the inner drum bag. Use of 90-mil rigid polyethylene liners began in 1972.(P024A) A rigid liner was placed in each drum and lined with one polyethylene round bottom drum liner or two polyethylene drum bags.(P008A, P012A, P016A, P063A, P064A) Bags were closed by twist and tie, twist and tape, or fold and tape methods.(P012A, P024A, P016A, P063A)

14.2.2 Boxes

From 1970 to 72 each plywood box was lined with a polyethylene box bag, and the bag was then lined with a cardboard liner. Each box was lined with a polyethylene box bag, and the bag was then lined with a cardboard liner. After the box was filled with waste, the bag ends and sides were folded toward the box center, and tape was used to seal the folded edges.(P024A) Coating plywood boxes with FRP began in 1972.

14.3 Waste Characterization

Fire brick debris wastes have been characterized based on knowledge of the material, knowledge of the processes generating the waste, RTR review of the waste, VE, waste analysis, and HGAS analysis. Fire brick wastes (IDCs 371 and 377) were estimated to be 80 percent or more (by volume) inorganic non-metal debris that meets the WAP criteria for classification as debris and are, therefore, heterogeneous waste.(P141A) Potential hazardous chemical constituents assigned to this group of IDCs by AK documentation are identified in Table 14-3.(P610A) There is no evidence of firebrick with PCBs at concentrations greater than 50 parts per million in the AMWTP inventory. Items that contain PCBs may be encountered (e.g., light ballasts).(P393A) When found, they will be managed in accordance with the WIPP WAC.

Table 14-3. Potential hazardous chemical constituents of fire brick debris waste.

IDC	Chemical Constituents(P016A, P024A, P368A)
371	1,1,1-trichloroethane, 1,1,2-trichloro-1,2,2-trifluoroethane, acetone, arsenic, barium, benzene, carbon tetrachloride, cadmium, chromium, cyanide cleaning bath solutions, cyanide plating bath solutions, electroplating sludges, lead, mercury, methanol, methylene chloride, selenium, silver, tetrachloroethylene, toluene, trichloroethylene, xylene
377	1,1,1-trichloroethane, 1,1,2-trichloro-1,2,2-trifluoroethane, acetone, arsenic, barium, benzene, carbon tetrachloride, cadmium, chromium, cyanide cleaning bath solutions, cyanide plating bath solutions, electroplating sludges, lead, mercury, methanol, methylene chloride, selenium, silver, tetrachloroethylene, toluene, trichloroethylene, xylene

14.3.1 Radionuclides

Information about radionuclides common to all RF wastes is presented in Section 3.0 of this document.

- The radionuclides of concern for IDCs 371 and 377 are ^{238}Pu, ^{239}Pu, ^{240}Pu, ^{242}Pu, ^{233}U, ^{234}U, ^{238}U, and ^{241}Am.
- The two most prevalent radionuclides in the miscellaneous heel wastes are ^{239}Pu and ^{240}Pu.(P610A)

- The combustibles sent to the incinerator were generated by numerous production processes, and incinerator wastes also will be contaminated with ^{235}U.(P368A) Documented assay results for IDC 377 confirm the presence of ^{235}U.(P016A, P368A)
- The remaining WIPP-tracked radionuclides, ^{137}Cs and ^{90}Sr, are not expected to be present in measurable quantities in miscellaneous heel waste.

Radioassay interferences may include polypropylene from Ful-Flo filters, cadmium or chromium from HEPA filter frames, aluminum foil used as a spacer between the folds of the filter media, and Nomex, which is an aromatic polyamide fiber used in HEPA filters at five to seven weight percent.(P035A, P052A)

15.0 LEADED RUBBER DEBRIS WASTE

This waste group consists of leaded rubber debris wastes generated by the production, recovery, laboratory, treatment, maintenance, and R&D activities associated with plutonium operations. The waste was generated in Buildings 371, 374, 559, 707, 771, 774, 776, 777, and 779 and consists primarily of leaded rubber gloves and aprons generated by plutonium production, recovery, treatment, laboratory activities, and maintenance operations.(P001A, P012A)

Historic IDC descriptions and dates of generation for this waste in the AMWTP inventory are presented by IDC in Table 15-1.(P090A, P367A, P368A, P370A, U059A, U069A, U092, U128A) Leaded rubber debris waste (IDC 339) was originally characterized under the CBFO-approved WSPF, INW252.001.(P305A, P308A)

Table 15-1. Leaded rubber debris waste in the AMWTP inventory.

IDC	Title	Dates of Generation[c]
339[a]	Leaded Rubber Gloves and Aprons(C063A) Leaded Drybox Gloves and Other Leaded Rubber(C063A) Leaded Drybox Gloves, Not Acid Contaminated(P001A)	February 1973–July 1988
463	Leaded Rubber Gloves and Aprons	1971–1973
040	Rubber	Prior to June 1971[b]

a. IDC 463, which was used in 1971 and 1972, was replaced with IDC 339 in 1973.(P024A)

b. IDC 040 is two digit IDC that may have been used prior to June 1971.(C267A)

c. Dates of generation are based on available shipping papers and may not reflect the actual inventory at INL due to incomplete records for waste received prior to 1973.

Item Description Code 339—Leaded Rubber Gloves and Aprons: This waste consists of leaded drybox (glovebox) gloves and leaded aprons generated in Buildings 371, 374, 559, 707, 771, 774, 776, 777, and 779.(P049A, P083A) Leaded gloves were used in gloveboxes to reduce radiation exposure to personnel. Leaded aprons were also used to reduce radiation exposure. Leaded gloves were fabricated with three layers: a neoprene layer, a lead oxide layer, and a Hypalon layer.(P012A, P035A) Two types of leaded gloves were used: S6 and S2P2. The only differences in these two types of gloves were the weight of the gloves and the thickness of the Hypalon layer.(P016A, C051A) Prior to 1986, all leaded glovebox gloves, both acid contaminated and not acid contaminated, were accumulated together as IDC 339. In 1986, IDC 341 was created to sort gloves that were generated in an environment where they may have been exposed to acid.(C050A, P035A)

Item Description Code 463—Leaded Rubber Gloves and Aprons: This waste consists of leaded glovebox gloves and aprons. The waste may contain limited amounts of unleaded gloves, lead bricks, and lead sheeting. IDC 463, used in 1971–1972, was replaced with IDC 339 in 1973.

Item Description Code 040—Rubber: This waste is expected to consist of leaded rubber gloves and aprons generated from the same processes as IDC 463 but is one of the original IDC designators used at RF prior to June 1971.(C267A)

Typical waste material parameters for leaded rubber debris waste containers, including typical packaging materials, are presented in Table 15-2.(P305A) RF waste management and inspection protocol allowed containers of wastes to contain up to 10 percent of another IDC other than that assigned to the container.(P016A)

Table 15-2. Typical waste material parameters for leaded rubber debris waste containers.

Typical Waste Material Parameter	Examples
Steel (packaging materials)	55-gallon drum
Plastics (packaging materials)	90-mil drum liner, O-ring bag, drum bags
Cellulosics	Fiberboard liner and disks, cloth and paper items
Plastics (waste material)	Poly bags, poly bottles
Other Metals	Leaded gloves, lead liner
Rubber	Neoprene, Hypalon®
Other Inorganic Materials	Vermiculite, Oil-Dri®

Items identified in containers during the 3,100 m^3 Project examinations of the leaded rubber debris waste are listed in detail in INEL-96/2080 and include a variety of combustible, glass, iron-based metals, and inorganic liquids.(P368A) Acceptable knowledge confirmation activities also identified numerous items in a small percentage of the leaded rubber debris waste containers, including small quantities of liquid, surgical gloves, rags, paper, cloth towels, booties, glove liners, neoprene rubber sheets and window gaskets, a polyethylene bottle, and skirting.(P015A, P368A, U015A) RTR and VE of other RF debris waste streams have identified debris items including combustibles (paper, rags, gloves, etc.), plastic (bottles, tubing bags, etc.), glass (bottles, Raschig rings, beakers, etc.), lead (glass, tape, gloves, scrap, etc.), metal (nuts, bolts, cans, welding rods, tools, wire, scrap, etc.), and other debris (concrete, light bulbs, etc.).

15.1 Waste Generation

Leaded rubber debris waste was generated by plutonium operations at the site. Size reduction in Building 776 removed materials from drums and sorted them in an airlock vault. Materials such as light metals, filters, glass, combustibles, and Raschig rings were then put into containers with like materials.(P067A) From 1970 to 1973, each generating area packaged leaded gloves. Acid-contaminated glovebox gloves may have been washed by hand prior to 1974; however, this has not been verified.(C099A, C100A, P012A) Beginning in 1974, acid-contaminated leaded gloves were sent to Building 776 where they were washed with hot water in a ball-mill prior to packaging. Later, non-acid-contaminated leaded gloves above the EDL were also washed in the ball-mill to remove radioactive surface contamination.(P024A) The ball-mill washing process was discontinued in 1989.(P052A) However, any unwashed acid-contaminated leaded gloves generated since 1989 were assigned IDC 341 (not in INL inventory).(P024A, P067A)

15.2 Waste Packaging

15.2.1 Drums

Leaded rubber debris waste (IDC 339) was placed directly into a lined 55-gallon drum or double bagged out of the glovebox line in two PVC or polyethylene bags.(P012A, P015A, P021A, P024A)

Depending on waste packaging requirements at the time, several combinations of bags and liners were used to prepare 55-gallon drums for shipment. Use of the 90-mil rigid polyethylene liner began in 1972.(P024A) The rigid liner was placed in each drum and lined with one polyethylene round bottom drum liner or one or two polyethylene drum bags.(P012A, P015A, P016A, P024A, P063A, P064A) A PVC O-ring bag and a polyethylene bag were used if the drum was attached to the glovebox.(P016A) A fiberboard liner and discs may also have been used between the waste packages and the drum liners.(P012A, P016A, P063A, P064A) Lead drum liners placed between the drum and rigid liner were also used in some instances.(P024A) When a drum was full, the drum liners were twisted and taped closed, the lid was secured with a bolted ring, and a tamper indicating device was attached to the drum.(P012A, P016A, P024A) Because of previous VE, drums may also exhibit a filtered bag method of closure.

Several combinations of drum bags, poly bags, and O-ring bags may have been used to package leaded rubber debris waste.(P368A, P487A) Any combination of plastic bags, provided that a maximum of two inner bags and two liner bags is not exceeded, does not impact the acceptability of the drums.(P016A)

After drums were inspected, one to two quarts of absorbent material (Oil-Dri®) was placed on the top of the outer, sealed polyethylene drum bag. This procedure changed in February 1982 when vermiculite was used to fill the space between the outer, sealed polyethylene drum bag and the top of the 90-mil rigid liner. The quantity of vermiculite varied from three to twelve pounds according to the amount of waste contained in each drum.(P024A) RTR examinations indicated that quantities of absorbent can vary significantly from expected quantities, and some drums may contain no absorbent.(P368A, P462A, P487A) In addition, Oil-Dri® and vermiculite may be used in some drums outside the expected time periods.(P305A)

15.2.2 Boxes

Four boxes of leaded rubber debris waste were identified in the TWMIS database.(U094A) Little information is available about contents or packaging of these boxes. Each FRP-coated box was lined with a polyethylene box bag and the bag was then lined with a cardboard liner. After the box was filled with waste, the bag ends and sides were folded toward the box center, and tape was used to seal the folded edges.(P024A)

15.3 Waste Characterization

Leaded rubber debris waste[P487A] was characterized based on knowledge of the material, knowledge of the processes generating the waste, RTR review of the waste, VE, and HGAS analysis. These wastes contain at least 50 percent (by volume) materials that meet the WAP criteria for classification as debris and are heterogeneous wastes.[P141A] Potential hazardous chemical constituents assigned to this group of IDCs by AK documentation are identified in Table 15-3.[U092A] There is no evidence that indicates PCBs in concentrations greater than 50 parts per million. Items that contain PCBs (e.g., light ballasts) are not expected to be present.[P393A]

Table 15-3. Potential hazardous chemical constituents of leaded rubber debris waste.

IDC	Chemical Constituents[1, 2, P015A, P016A, P239A, P307A, P368A]
339	1,1,1-trichloroethane, 1,1,2-trichloro-1,2,2-trifluoroethane, acetone, benzene, carbon tetrachloride, chloroform, cyanide cleaning bath solutions, cyanide plating bath solutions, electroplating sludges, lead, methanol, methylene chloride, tetrachloroethylene, trichloroethylene, toluene, xylene
463	Lead
040	

15.3.1 Radionuclides

The radionuclides potentially contained in the leaded rubber debris waste, as well as the chemical form of radionuclide contaminants and radioassay interferences are described in the following sections. Information about radionuclides common to all RF wastes is presented in Section 3.0.

- The radionuclides of concern for leaded rubber debris waste are ^{238}Pu, ^{239}Pu, ^{240}Pu, ^{242}Pu, ^{233}U, ^{234}U, ^{238}U, and ^{241}Am.
- The two most prevalent radionuclides expected in the leaded rubber debris waste containers are ^{239}Pu and ^{240}Pu.
- The remaining WIPP-tracked radionuclides, ^{137}Cs and ^{90}Sr, are not expected to be present in measurable quantities; however, it is assumed that repackaged drums could contain waste generated from any process.

Radioassay interferences may include polypropylene from Ful-Flo filters, cadmium or chromium from HEPA filter frames, aluminum foil used as a spacer between the folds of the filter media, and Nomex, which is an aromatic polyamide fiber used in HEPA filters at five to seven weight percent.[P035A, P052A]

16.0 NON-SPECIAL SOURCE METAL

This waste stream is comprised of various forms of discarded non-special source metal (e.g., gloveboxes, equipment, ducting, piping, mechanical and electrical parts, cans, tools) generated during operations at RF. It includes smaller metal items that have been washed with hot water to recover the plutonium. It also includes used tantalum crucibles, funnels, funnel inserts, and pour-rods, as well as other metals including tungsten, platinum, and lead. The waste may include limited amounts of combustible materials. The metal debris was generated during production, recovery, purification, laboratory, waste treatment, maintenance, R&D, and non-routine activities (e.g., fire cleanup, strip-outs) associated with plutonium operations at RF. This waste stream includes metal wastes assigned IDCs 320, 321, 480, and 481. The wastes were generated in Buildings 371, 374, 559, 707, 771, 774, 776, 777, and 779.(P001A, P012A, P016A, P024A, P368A, P450A, P451A) This waste was characterized during the 3,100 m^3 Project under a CBFO-approved WSPF, INW296, for containers of waste shipped to the WIPP facility.(P213A, P222A)

Historic IDC descriptions and dates of generation for this waste in the AMWTP inventory are presented by IDC in Table 16-1.(P090A, P367A, P368A, P370A, U059A, U069A, U092, U128A)

Table 16-1. Non-special source metal waste in the AMWTP inventory.

IDC	Title	Dates of Generation[d]
320	Heavy Non-special Source Metal(P001A) Tantalum(C063A)	June 1971–June 1988[a]
321	Lead(P012A)	October 1987–November 1987
480	Non-special Source Metal Unleached Light Non-special Source Metal(P024A) Light Non-special Source Scrap Metal, Not Prepared for Leaching(P014) Metal Scrap (Non-special Source)(C063A) Light Non-special Source Metal, Not Prepared for Leach(C063A) Non-leached Light Metal(P063A) Light Metal(P001A)	July 1971–July 1989[b]
481	Leached Non-special Source Metals Leached Non-special Source Metal(P024A) Light Non-special Source Scrap Metal Prepared for Leaching(P014A) Metal Leached (Non-special Source)(C063A) Light Non-special Source Metal Prepared for Leach(C063A) Leached Light Metal(P063A)	November 1971–November 1985
488	Glovebox Parts w/Lead	July 1988
48A	WETP Bin Program – Metals	July 1993
050	Metal Scrap	Prior to June 1971[c]

a. Does not include containers with a prefix of RD94 that were packed in September 1994.
b. Does not include containers with prefixes of RD93 and RD94 with pack dates of May–June 1994 and July–August 1994.
c. Two digit IDCs that may have been used prior to June 1971.(C267A)
d. Dates of generation are based on available shipping papers and may not reflect the actual inventory at INL due to incomplete records for waste received prior to 1973.

Item Description Code 320—Heavy Non-special Source Metal: This waste consists of heavy non-special source metals generated in Buildings 371, 559, 707, 771, 776, 777, and 779.(P016A, U059A, U092A) Heavy non-special source metals include metals heavier than copper on the periodic table. Tantalum items include crucibles, funnels, boats, process fixtures, pour rods, stir rods, and various other equipment that were used to handle molten plutonium.(P001A, P014A, P016A, P083A) The waste consists primarily of tantalum but also includes metals such as tungsten, platinum, and DU.(P083A) Devices containing mercury (i.e., batteries, thermometers, gauges, and switches) may also be present.(P052A) In addition, waste generated prior to 1987 could contain lead materials such as bricks, tape, sheeting, and glovebox parts. IDC 321 was created in 1987 specifically for lead waste.(P016A) IDC 320 was redefined from tantalum to heavy non-special source metal in 1985 to be more inclusive.(C063A)

Item Description Code 321—Lead: This waste consists primarily of radiation shielding in the form of lead bricks, tape, sheeting, and glovebox port covers.(P016A, P037A, P049A, P083A, P116A) This IDC may also contain lead-acid batteries.(P052A) The waste was generated by production operations in Building 707 and recovery, purification, and size reduction activities in Building 776.(U059A, U092A) IDC 321 was created in 1987 to sort lead waste from other heavy metals.(C050A, P016A)

Item Description Code 480—Non-special Source Metal: This waste consists of light metal generated by the plutonium production, recovery, treatment, laboratory, and maintenance operations in Buildings 371, 374, 559, 707, 771, 774, 776, 777, and 779.(P012A, P052A) Light metal includes iron, copper, aluminum, brass, bronze, galvanized metal, stainless steel, carbon steel, and other metal alloys. The metals consist of mechanical and electrical parts, tools, containers, scrap metals, piping, wire, cable, gauges, valves, foil, planchets, lead and dry cell batteries, and a variety of other metal items.(P052A) The metals may be contaminated with residual amounts of solvents, acids, bases, and other reagents used in the processes where they were generated.(P083A) Solvent-contaminated metals were not sorted from non-solvent-contaminated metals.(P114A) Beryllium, pyrophoric metals, and heavy non-special source metal are excluded from IDC 480.(P032A) The waste may also contain limited amounts of combustible wastes(P024A) and mercury.(P399A) Boxes of IDC 480 generally contain larger items such as cut-up glove boxes, piping, ducting, etc.(P024A)

Item Description Code 481—Leached Non-special Source Metals: This waste consists of light metal that was washed with hot water in Building 776 to remove radioactive surface contamination. Leached light metal consists of the same metals in IDC 480 and originated from the same buildings and processes as IDC 480.(P014A, P024A)

Item Description Code 488—Glovebox Parts w/Lead: This waste consists of glovebox parts with lead.

Item Description Code 48A—WETP Bin Program – Metals: This waste consists of a mixture of waste with IDCs 480 and 481 (Non-special Source Metal, Leached Non-special Source Metal).

Item Description Code 050—Metal Scrap: This waste consists of metal generated from the same processes as IDC 480 but was the original IDC designator used at RF prior to June 1971.(C267A)

Typical waste material parameters for non-special source metal waste containers, including typical packaging materials, are presented in Table 16-2.(P222A, P368A, P462A) RF waste management and inspection protocol allowed containers of wastes to contain up to 10 percent of an IDC other than that assigned to the container.(P016A) RTR and VE of other RF debris waste streams have identified debris items including combustibles (paper, rags, gloves, etc.), plastic (bottles, tubing bags, etc.), glass (bottles, Raschig rings, beakers, etc.), lead (glass, tape, gloves, scrap, etc.), metal (nuts, bolts, cans, welding rods, tools, wire, scrap, etc.), and other debris (concrete, light bulbs, etc.). Items identified in containers during the 3,100 m^3 Project examinations of the non-special source metal waste include a variety of combustible, glass, concrete, lead, and plastic items including wipes, surgical gloves, paper, Raschig rings, beakers, vials, fluorescent bulbs, leaded gloves, lead tape, scrap lead, rubber gaskets, plastic bags, containers, and tubing. Other items identified included tantalum crucibles, asbestos tie-wraps, aerosol cans, and light ballasts.(P368A) Acceptable knowledge confirmation activities also identified numerous items in a small percentage of the non-special source metal waste containers, including small quantities of liquid, Raschig rings, beakers, vials, rubber gaskets, batteries, light bulbs, lead items (e.g., rubber gloves and aprons, tape, and sheeting), and miscellaneous cellulosic and plastic items.(P368A)

Table 16-2. Typical waste material parameters for non-special source metal waste containers.

Typical Waste Material Parameter	Examples
Steel (packaging materials)	55-gallon drum
Plastics (packaging materials)	90-mil drum liner, O-ring bags, drum bags
Iron-based Metals/Alloys	Metal waste items
Other Metals	Copper, brass, bronze, lead, tantalum, platinum.
Aluminum-based Metals/Alloys	Aluminum waste items
Other Inorganic Materials	Glassware, Raschig rings, absorbents (e.g. vermiculite, Oil-Dri®)
Cellulosics	Cardboard liner, Fibre-Pak, wipes, tape
Plastics (waste materials)	Bags, bottles, tubing
Rubber	Rubber gloves

16.1 Waste Generation

Non-special source metal was generated by plutonium operations at the site. Except for details relevant only to this waste stream, these operations are discussed in Section 3.0.

Production support operations in Buildings 707 and 777 included a variety of inspection, calibration, measurement, weighing, leak testing, and cleaning activities to assure that cast plutonium parts met stringent specifications. Rejected plutonium parts, scraps, and turnings were returned to be recast. Small pieces of metal, fines, and sweepings were typically burned to oxide

and sent to Building 771 to be recovered.(P052A, P053A) Typical non-special source metal generated included chips, turnings, tools, and molds.(P083A)

Recovery operations in Building 771 used acid to dissolve solid materials containing plutonium. During normal glovebox operations, metal tools that were worn or broken were disposed of as non-special source metal waste.(P083A)

Plutonium metal from returned parts and metal from other DOE facilities were purified at RF. Metal chips were generated from disassembly, and stainless steel and aluminum cans were generated from the MSE and electrorefining processes.(P083A)

Spray leaching (Building 771) and hydride leaching (Building 779) also used acids to remove plutonium surface contamination from uranium metal and other metals or beryllium contamination from plutonium metal.(P061A, P062A) From 1970 to 1975, heavy non-special source metal contaminated with plutonium above the EDL was processed by spray leaching in Building 771. Starting in 1975, hydride leaching in Building 779 was used to remove recoverable amounts of plutonium from heavy non-special source metal.(P024A, P058A) These processes used nitric, hydrochloric, sulfuric, and sulfamic acids.(P053A, P061A, P062A)

Some waste generated from plutonium recovery operations consisted of unneeded equipment and gloveboxes, such as the old metal leaching line, that were removed to allow space for new processes.(P024A) The waste was in the form of cut up gloveboxes, 3- to 8-inch diameter ducting, pipelines, a washing machine, a shredder, drum filter, a crusher, grinding mill, and other miscellaneous equipment. Wastes were usually wrapped in plastic before being placed in prepared waste boxes. A small number of boxes were generated from renovation projects conducted in areas (primarily Building 881) operated by special recovery operations. The waste consisted of piping, ducting, furnaces, shelving, cabinets, tools, etc., removed from an old leaching line. Large waste items, such as gloveboxes and hoods, were transported to size reduction for processing. The wastes were either placed directly into prepared waste boxes or wrapped in plastic before being placed in a box, depending on contamination levels. The laboratories generated non-special source metal wastes such as tools, planchets, and metal labware. Silver and lead solder and printed circuit boards containing cadmium, chromium, lead, and silver were also generated.(P061A) These wastes may have contacted any of the reagents and solvents used in the laboratories (Section 3.0).

Size reduction in Building 776 removed materials from drums and sorted them in an airlock vault. Materials such as non-special source metals, filters, glass, combustibles, and Raschig rings were then put into containers with like materials.(P067A) Non-special source metal above the EDL was washed with hot water in an attempt to remove radioactive surface contamination, and then reassayed.(C053A, C082A, P024A) The metals were washed by hand from 1971 to 1973, and a ball-mill washer was used from 1974 until the process was discontinued in 1989.(P024A, P052A) If washing reduced the assay to below the EDL, the metal was discarded as IDC 481.(C053A, P024A)

Advanced size reduction operations in Building 776 disassembled or cut plutonium-contaminated gloveboxes and miscellaneous large equipment into sizes that could be packaged in approved containers (drums or boxes).(P024A, P067A, P110A) Wastes were usually reduced to pieces small enough for two men to handle. Heavier waste items (lathes, etc.) were limited in weight to 2,000 pounds. Gloveboxes were usually cut into flat pieces to improve utilization of waste box space. Glovebox windows (Plexiglas, leaded glass, etc.) were usually removed from the glovebox and placed into the waste box. Any liquid waste, such as gearbox oil and lathe coolant, was drained from all equipment. Oil-Dri® absorbent was used when necessary. All metal wastes processed by the Size Reduction Facility were placed directly into prepared waste boxes or drums. Waste boxes packaged since 1973 and through 1980 generally contain large waste items. Starting in 1980, drums containing metal wastes generated by various plutonium operations were transported to the Size Reduction Facility and emptied into waste boxes. This change, initiated to improve packaging efficiency and reduce the volume of waste shipped to the INL, resulted in smaller waste items in boxes as well as an increase in the organic content of a box, since any small, line-generated metal wastes were usually contained in plastic.

Utility systems included HVAC systems, fume scrubbers, and process vacuum systems. Non-special source metal parts and tools were generated from maintenance of motors, fans, and associated systems and circuits.(P061A, P081A)

Oils and Raschig rings are used in numerous processes and require periodic changeout. During oil changes, oil filters (possibly terne-plated), were replaced and discarded as non-special source metal waste. During Raschig ring removal, broken bolts, part covers, tools, and other non-special source metals were discarded as waste. Other general maintenance activities generating metal waste included repair of gloveboxes, tanks, valves, pumps, and piping.(P061A, P067A, P083A, P109A)

Production, recovery, purification, treatment, R&D, and laboratory operations required various types of machinery, instruments, and other equipment. Parts from the equipment were routinely changed due to normal wear and tear. The replaced parts were then discarded as non-special source metal waste. Parts from Building 374 liquid waste treatment operations may have been contaminated with sludges containing cadmium and lead.(P052A, P083A)

Another maintenance activity that may have generated non-special source metal was the strip-out of glovebox lines, process piping, valves, and associated systems. Strip-out activities were performed when a glovebox line was scheduled to be replaced or during renovation. Solvents such as trichloroethylene or 1,1,1-trichloroethane may have been used during this type of operation for decontamination.(P067A, P108A) Non-special source metal such as piping from strip-out operations may be contaminated with sludge containing chromium and lead.(P052A)

Non-special source metal waste such as ducting and equipment may have also originated from cleanup of the 1969 fire which spread through combustible materials in several hundred inter-connected gloveboxes in Building 776.(P024A, P053A) In 1974, 214 boxes of non-special source metal waste were generated from final fire cleanup operations.(P024A) The waste is believed to consist primarily of ducting from the Building 776 exhaust system. Other wastes may include parts or pieces of the Marform and Hydroform presses and the four-high rolling mill that were removed during final cleanup operations, and equipment (saws, scaffolds, etc.) used in the

operation. Any liquids, such as press oils, were removed or drained from equipment. Oil-Dri® absorbent was used when necessary. Ductwork was usually crushed for volume reduction prior to packaging. Wastes were either placed directly into prepared waste boxes or wrapped in plastic before being placed in a waste box.

16.2 Waste Packaging

16.2.1 Drums

Non-special source metal was placed directly into a lined 55-gallon drum or bagged out of the glovebox line in up to three plastic bags. Some metal may also have been packaged in half-gallon or one-gallon polyethylene bottles within the plastic bags. After removal from the glovebox, the waste was placed in the drum or in Fibre-Paks, which were then placed in the drum. Prior to packaging, sharp edges were taped or wrapped with paper wipes to prevent puncturing the liners.(P012A, P015A, P024A)

Depending on waste packaging requirements at the time, several combinations of bags and liners were used to prepare 55-gallon drums for shipment. From 1970 to 1972, waste drums were lined with one or two polyethylene drum bags. Cardboard liners might also have been used to line the inner drum bag. Use of the 90-mil rigid polyethylene liner began in 1972.(P024A) The rigid liner was placed in each drum and lined with one polyethylene round bottom drum liner bag or two polyethylene drum bags.(P008A, P012A, P016A, P024A, P063A, P064A) A PVC O-ring bag and a polyethylene bag were used if the drum was attached to the glovebox.(P016A) A fiberboard liner and discs may also have been used between the waste packages and the drum liners for puncture protection.(P012A, P063A, P064A) Lead drum liners placed between the drum and rigid liner were also used in some instances.(P001A, P016A, P024A, P043A)

When a drum was full, the drum bags were twisted and taped closed, or closed with a plastic tie, the lid was secured with a bolted ring, and a tamper indicating device was attached to the drum.(P012A, P016A, P024A)

Several combinations of drum bags, poly bags, and O-ring bags may have been used to package non-special source metal waste.(P222A) Any combination of these plastic bags, provided that six layers of containment, two of which are drum liner bags, were not exceeded, do not impact acceptability of the drum for shipment to WIPP.(P462A)

After drums were inspected, one to two quarts of absorbent material (Oil-Dri®) was placed on the top of the outer, sealed polyethylene drum bag. This procedure changed in February 1982, when vermiculite was used to fill the space between the outer, sealed polyethylene drum bag and the top of the 90-mil rigid liner. The quantity of vermiculite varied from three to twelve pounds according to the amount of waste contained in each drum.(P024A) In addition, Oil-Dri® and vermiculite may have been used in some drums outside the expected time periods.(P222A)

16.2.2 Boxes/Bins

Two boxes of IDC 320 were identified in the TWMIS database.(U094A) While contents of the boxes are not expected to differ significantly from drums of IDC 320, little information is available about contents or packaging of these boxes. These two boxes were generated in

December 1984. Other boxes generated during this time period were plywood boxes coated with FRP. Each plywood box was lined with a polyethylene box bag, and the bag was then lined with a cardboard liner. After the box was filled with waste, the bag ends and sides were folded toward the box center, and tape was used to seal the folded edges.(P024A) The IDC 320 boxes were probably packaged similarly.

Many boxes of IDC 480, 481, and 488 were also identified. Each plywood box was lined with a polyethylene box bag, and the bag was then lined with a cardboard liner. After the box was filled with waste, the bag ends and sides were folded toward the box center, and tape was used to seal the folded edges. Before 1972, uncoated plywood boxes were used. Coating plywood boxes with FRP began in 1972.(P024A)

IDC 48A consisted of bagged waste removed from IDCs 480 and 481 drums for VE. The bags were breached during VE and subsequently placed directly into bins. Waste may also have been repackaged in polyethylene bags after VE. Wire mesh was placed in the bins and the bins were then overpacked in SWBs.

16.3 Waste Characterization

Non-special source metal was characterized based on knowledge of the material, knowledge of the processes generating the waste, RTR review of the waste, VE, and headspace gas analysis. This waste contains at least 50 percent (by volume) materials that meet the WAP criteria for classification as debris, and is, therefore, a heterogeneous waste.(P141A, P213A, P222A) Potential hazardous chemical constituents assigned to this group of IDCs by AK documentation are identified in Table 16-3. Non-special source metal wastes with PCBs at concentrations greater than 50 parts per million are not expected within the AMWTP inventory. A portion of the containers in this waste stream may contain PCB items (e.g., fluorescent light ballasts) with concentrations greater than 50 parts per million PCBs.(P053A, P368A, P393A)

Table 16-3. Potential hazardous chemical constituents of non-special source metal waste.

IDC	Chemical Constituents(, C245A, P015A, P016A, P368A)
320	lead
321	lead
480 050	1,1,1-trichloroethane, 1,1,2-trichloro-1,2,2-trifluoroethane, 1,2-dichloroethane, acetone, benzene, carbon disulfide, carbon tetrachloride, cadmium, chromium, cyanide cleaning bath solutions, cyanide plating bath solutions, electroplating sludges, ethyl benzene, lead, mercury, methanol, methylene chloride, silver, tetrachloroethylene, toluene, trichloroethylene, xylenes
481	1,1,1-trichloroethane, 1,1,2-trichloro-1,2,2-trifluoroethane, 1,2-dichloroethane, acetone, benzene, carbon disulfide, carbon tetrachloride, cadmium, chromium, cyanide cleaning bath solutions, cyanide plating bath solutions, electroplating sludges, ethyl benzene, lead, mercury, methanol, methylene chloride, silver, tetrachloroethylene, toluene, trichloroethylene, xylenes
488	lead
48A	1,1,1-trichloroethane, 1,1,2-trichloro-1,2,2-trifluroethane, 1,2-dichloroethane, carbon tetrachloride, lead, mercury, methylene chloride

16.3.1 Radionuclides

The radionuclides potentially contained in the combustible and plastic wastes, and radioassay interferences, are described in the following sections. Information about radionuclides common to all RF wastes is presented in Section 3.0.

- The radionuclides of concern for RF IDCs 320, 321, 480, and 481 are ^{238}Pu, ^{239}Pu, ^{240}Pu, ^{242}Pu, ^{233}U, ^{234}U, ^{238}U, and ^{241}Am.
- The two most prevalent radionuclides expected in the non-special source metal waste containers are ^{239}Pu and ^{240}Pu.
- The remaining WIPP-tracked radionuclides, ^{137}Cs and ^{90}Sr, are not expected to be present in measurable quantities.

Building 777 performed disassembly of site-return parts and fabrication operations, including machining, briquetting, assembly, and production support processes (container Prefixes 0004, 0023, and 0024).(C184A, P052A, P079A, U059A) Wastes from fabrication operations will be contaminated with WG Pu and EU. Wastes generated by disassembly operations will be contaminated with site-return plutonium (higher ^{241}Am decay product) and EU.(C184A, P079A) Tritium may also be present from disassembly operations.(P053A) There is documentation of five drums of IDC 480 containing tritium; however, it is not known if they were generated by this process, and the specific drum numbers and package dates are not known.(U019A) Wastes generated from Building 771 filter plenum maintenance were assigned container prefix 0009.(C184A, P052A) It was assumed that this waste could contain any of the radionuclides processed in the building. It is assumed that repackaged drums could contain waste generated from any process.

Radioassay interferences may include polypropylene from Ful-Flo filters, cadmium or chromium from HEPA filter frames, aluminum foil used as a spacer between the folds of the filter media, and Nomex, which is an aromatic polyamide fiber used in HEPA filters at five to seven weight percent.(P035A, P052A)

17.0 MISCELLANEOUS INCINERATOR ASH, ASH HEELS AND SOOT

This waste group includes ash, ash heels, and soot generated by the plutonium recovery incinerator in Building 771, and the FBI in Building 776. Historic IDC descriptions and dates of generation for this waste in the AMWTP inventory are presented by IDC in Table 17-1.(P090A, P163A, P368A, P370A, U092, U127A, U128A)

Table 17-1. Miscellaneous incinerator ash, ash heels, and soot waste in the AMWTP inventory.

IDC	Title	Dates of Generation[a]
420	Ash, Incinerator (Virgin)(P008A)	June 1972–April 1984
421	Ash Heels(P001A)	July 1976–April 1978
422	Soot(P001A)	September 1971–February 1986
425	Fluid Bed Ash(P014A)	July 1981

a. Dates of generation are based on available shipping papers and may not reflect the actual inventory at INL due to incomplete records for waste received prior to 1973.

Item Description Code 420—Ash, Incinerator (Virgin): This waste consists of ash from the plutonium recovery incinerator and is a mixture of coarse, granular, fine, and very fine particulate. The ash was jaw-crushed and ball-milled prior to removal from the glovebox.(P014A) The pulverized ash was assigned IDC 420. Unpulverized incinerator ash is assigned IDC 419; however, none of this waste is stored at INL. The ash was screened to remove tramp metal prior to being pulverized. (U013A) Drums of pulverized incinerator ash may contain some miscellaneous tramp metal, bits of unburned feed materials, and carbon from the incomplete oxidation of some feed materials.(P035A, P052A) Although not associated with an incinerator, IDC 420 may also include fire ash from the 1969 fire.(P058A)

Item Description Code 421—Ash Heels: This waste consists of those insoluble materials from the nitric acid dissolution of plutonium-containing materials in the first step of aqueous recovery processing.(P014A, P024A, P035A, P043A, P052A, P163A) The heel is a very fine (less than 100 mesh) particulate and fairly homogenous due to the mixing action of the dissolution system. In general, the heel will contain the same constituents as the source ash; the relative concentrations will change depending on the solubility of the constituents.(P035A)

Item Description Code 422—Soot: This waste consists of soot, which is the airborne fly ash material that accumulated in the off-gas system of the plutonium recovery.(P014A, P024A, P052A) Soot will contain most of the same constituents as the ash from which it was derived; however, the relative amounts of silica, carbon, and minor components (the alumina, calcium, iron, and sodium oxides) will vary widely in the mixture. Soot generally contained a higher concentration of carbon and fine particulate than IDC 420 due to incomplete oxidation of some feed materials.(P016A, P035A, P052A)

Item Description Code 425—Fluid Bed Ash: This waste consists of fluidized bed ash which is a fine powder generated by the FBI. The ash is made up of approximately 10 percent sodium chloride, 10 percent sodium carbonate, six percent carbon, 30 percent chromium oxide (oxidation catalyst) on aluminum oxide, and 40 percent fly ash (silicon dioxide, iron oxide, aluminum oxide).(P014A, P052A)

Potential waste material parameters for incinerator ash, ash heels, and soot waste containers, including packaging materials, are listed in Table 17-2.(P399A) RF waste management and inspection protocol allowed containers of miscellaneous incinerator ash, ash heels, and soot wastes to contain up to 10 percent of another similar IDC other than that assigned to the container. In addition, ash and/or soot from the 1969 fire at RF may have been included in the IDC 420 waste stream. (P058A)))

Table 17-2. Potential waste material parameters for incinerator ash, ash heels and soot waste containers.(P399A)

Potential Waste Material Parameter	Examples
Steel (packaging materials)	55-gallon drum
Plastics (packaging materials)	90-mil drum liner, O-ring bag, drum bag
Plastics (waste materials)	Inner container bags (Poly bags), 2- or 4-liter Nalgene bottles used as inner containers, tape, incomplete combustion products (e.g., plastic pieces)
Other Inorganic Materials	Ash, soot, Oil-Dri®, vermiculite[a]

a. The WMP for ash, ash heel, and soot was previously identified by AMWTP as Inorganic Matrix; however, these wastes are not cemented and do not match the description of Inorganic Matrix. Therefore, the WMP for ash and soot was changed to Other Inorganic Materials which is consistent with the WMP assigned by RFETS to ash and soot shipped directly from RFETS to WIPP. However, some containers of ash, ahs heels, and soot were examined by RTR prior to revising the WMP in RPT-TRUW-05. (P339A, , P435S, P436A))

17.1 Waste Generation

TRU incinerator wastes were generated by the plutonium recovery incinerator in Building 771, the FBI in Building 776. Process flow diagrams for incinerator waste generating processes are provided in Section 3.2.5.1 and in archived WSRIC information.(P061A) Ash (IDC 420), and soot (IDC 422) wastes were also generated during incinerator stripout operations in Building 371; however, none of this waste is stored at INEL.(P052A, U127A)

17.1.1 Plutonium Recovery Incinerator

The plutonium recovery incinerator in Building 771 was constructed for two main purposes. The first was to reduce the volume of solid combustible wastes to reduce storage costs. The second was to generate an ash from which actinides, primarily plutonium and americium, could be recovered.(P163A, U047A) The incineration system was comprised of a multi-chamber, refractory-lined firebox; caustic scrubber system; dedicated vacuum system; heat exchangers; various tanks, pipes, and valves; and a filter plenum.(P061A)

Combustible wastes (primarily IDCs 330, 331, 336, and 337) were received from production processes in Buildings 371, 707, 771, 776, 777, and 779.(P016A, P052A) Combustibles fed to the incinerator included paper, PVC and polystyrene bags, polypropylene and Ful-Flo filters, surgical gloves, PVC maintenance tents, and various types of sludge. The radioactively contaminated materials entered the glovebox from the drum hoist and bag-in area and were hand-sorted to segregate the combustibles. Non-combustibles, such as metal, leaded gloves or glass wastes, were removed from the glovebox.(P052A, P061A, P137A)

The incinerator was comprised of three chambers: a firebox where combustibles were initially introduced into the system, a main burner chamber where ashes that fell through the firebox grate continued to burn, and an afterburner section.(P163A, U047A) Material was fed into the incinerator and was reduced by a twelve-to-one ratio, by weight. Incinerator ash was pulverized in the ball mill before being bagged out of the glovebox into drums. The pulverized ash (IDC 420) was discarded as solid waste if the plutonium was below the EDL or was stored for recovery if it contained plutonium above the EDL.(P061A, P163A)

Two air-to-gas heat exchangers drew in room air to help cool the incinerator off-gas before it passed through a caustic scrubber, and a venturi which increased the scrubbing efficiency of the potassium hydroxide caustic scrubber solution. After the off-gas passed through the scrubber, it was filtered through the incinerator filter plenum. Cooling air from the heat exchangers was filtered through the incinerator filter plenum and then through the main filter plenum where the gases were combined with other glovebox exhaust gases.(P061A)

The potassium hydroxide solution from the scrubber was processed through the drum filter where particulate matter (fly ash) was entrained on diatomite filter media.(P067A)

The low-level dissolution process was intended for high impurity/low plutonium content residues. The dissolution systems operated in the following way: ash was introduced into a glovebox system, fed by screw conveyor with calcium fluoride to the first dissolver pot, and allowed to cascade by gravity through a series of air lifted dissolver pots before overflowing into a pan-type nutsche filter. Aluminum nitrate was added to the last dissolver to complex any remaining fluoride and prevent corrosion of down stream equipment. The undissolved material collected in the pan filter was periodically scraped from the filter, dried on a hot plate, and assayed for plutonium content. This material was labeled IDC 421, ash heel.(P024A, P035A, P052A, P163A, U047A)

17.1.2 Fluidized-Bed Incinerator

The FBI received low-level plutonium-contaminated combustible solid and liquid wastes. The main purpose of the FBI program was to develop new technology to reduce volume and destroy volatile constituents prior to plutonium recovery operations.(P037A, P052A)

The first runs of the FBI were made from 1971 to 1978 in a pilot-scale unit. Test materials introduced into the incinerator included PVC, polyethylene, and paper. After 1974, paint thinner, tributyl phosphate, kerosene, and hydrazine hydrate were burned. In 1978, PCBs mixed as one part PCB to four to five parts diesel fuel or kerosene were burned.

The first runs of the full-scale FBI occurred from 1978 to 1981. These first runs used test materials such as newspaper, LLW from Building 776, combustible waste, kerosene, garage oil, and grease. Test runs conducted from 1985 to 1988 were conducted with methanol, diesel products, and non-radioactive surrogate combustibles (shredded coveralls, leather gloves, rolls of PVC plastic, wood, and paper).(P052A)

Liquid wastes were pumped through filters into two incinerator feed tanks. From these tanks, the liquid was sprayed into the incinerator through nozzles. Solid wastes were transferred to a glovebox for hand-sorting where non-combustible materials such as metal and glass were removed. The combustible wastes were shredded and conveyed by screw feeder to the incinerator.(P067A)

The wastes were incinerated in fluidized beds of sodium carbonate and chromic oxide catalyst. The incinerator had a primary reactor and an afterburner. Process flue gases passed through two stages of cyclone separators: a stainless-steel sintered metal filter bank, and a one-stage HEPA filter, before being exhausted into the HEPA filter plenum of the building ventilation system. The ash (IDC 425) collected by the filters and cyclone separators was bagged out of the glovebox into drums. Even though the FBI processed LLW, both low-level and TRU ash were generated due to the concentrating of radionuclides from the feed material.(P067A)

17.2 Waste Packaging

17.2.1 Drums

Pulverized incinerator ash (IDC 420) was packaged in one-half- or one-gallon polyethylene bottles. The bottles were bagged out of the glovebox and placed in one or two polyethylene bags, which were sealed with tape. The packages were assayed and placed into a 55-gallon drum. Up to 25 bottles were placed into a drum depending on assay.(P024A)

Ash heel (IDC 421) was packaged into one-half- or one-gallon polyethylene bottles and bagged out of the glovebox into a PVC bag. The PVC bag was then placed in one or two polyethylene bags. Each bottle was assayed and then placed in a prepared 55-gallon drum, depending on the assay results. Approximately 25 bottles fit in a drum, depending on plutonium content.(P024A)

Soot (IDC 422) was packaged in one- or two-quart polyethylene bottles. The bottles were bagged out of the glovebox and placed in two polyethylene bags, which were sealed with tape. The packages were assayed and placed into a 55-gallon drum. Up to 50 bottles were placed into a drum depending on assay.(P016A, P024A)

FBI ash (IDC 425) was packaged in small plastic bags. Several bags were bagged out of the glovebox, placed in a PVC bag that was sealed with tape, and the bag was placed into a 55-gallon drum.(P024A)

Depending on waste packaging requirements at the time, several combinations of bags and liners were used to prepare 55-gallon drums for shipment. From 1970 to 1972, waste drums

were lined with one or two polyethylene drum bags.. Use of 90-mil rigid polyethylene liners began in 1972.(P024A) A rigid liner was placed in each drum and lined with one polyethylene round bottom drum liner or two polyethylene drum bags.(P008A, P016A, P063A, P064A) A PVC O-ring bag and a polyethylene bag placed inside the rigid liner were used if the drum was attached to a glovebox.(P016A) When a drum was full, the drum liners were twisted and taped closed, the lid was secured with a bolted ring, and a tamper indicating device was attached to the drum.(P001A, P016A, P024A, P043A)

During the 3,100 m^3 Project, several combinations of round bottom drum liner bags, O-ring bags, and polyethylene bags were identified by characterization RTR and VE, including drums with no layers of containment (i.e., no drum bags). In addition, some drums packaged in 1972 and later may not include a rigid 90–mil liner. These configurations are atypical but do not impact WMC or HWN assignments.

Waste management practices for RF indicate twist and tape method for bag closure; however, a stub bag that is a heat-sealed filtered bag may be found in some containers that were visually examined at ANL-W as part of a previous VE program. RTR/VE also identified a filtered bag in a RF drum that was not visually examined by ANL-W. In addition, RTR/VE has identified twisted and tied or fold and tape as the method of bag closure. The presence of the heat-sealed filtered bag, twist and tied (with zip-tie or wire) bag, or fold and taped bag as alternate closure methods for twist and tape does not affect the IDC, WMC, or HWN assignment of the container.(P402A, P445A)

After drums were inspected, one to two quarts of absorbent material (Oil-Dri®) was placed on top of the outer, sealed polyethylene drum bag. This procedure was changed in February 1982 when vermiculite was used to fill the space between the outer, sealed polyethylene drum bag and the top of the 90-mil rigid liner. The quantity of vermiculite varied from three to twelve pounds according to the amount of waste contained in each drum.(P024A)

During RTR examinations of sludge containers, quantities of absorbent were identified that varied significantly from expected quantities, or absorbent was identified outside of expected timeframes. In addition, some containers contained an absorbent other than that expected or contained no absorbent at all. These absorbent configurations are atypical but do not impact WMC or HWN assignments. Variations in the quantities of absorbent within incinerator ash and soot are expected to be similar to that found for sludge.

17.2.2 Boxes

The AMWTP container inventory does not include any miscellaneous incinerator ash or soot waste that is packaged in boxes.(C289A, P024A)

17.3 Waste Characterization

Miscellaneous incinerator ash and soot were characterized based on knowledge of the material, knowledge of the processes generating the waste, RTR review of the waste, VE, and headspace gas analysis. This waste contains at least 50 percent (by volume) materials that meet the WAP criteria for classification as inorganic particulates, and is, therefore, a homogeneous waste. Potential hazardous chemical constituents assigned to this group of IDCs by AK documentation are identified in Table 17-3. There is no evidence that indicates PCBs in concentrations greater than 50 parts per million. Items that contain PCBs (e.g., light ballasts) are not expected to be present.(P393A)

Table 17-3. Potential hazardous chemical constituents of miscellaneous incinerator ash and soot waste.

IDC	Chemical Constituents(P016A, P052A, P368A)
420	1,1,1-trichloroethane, arsenic, barium, cadmium, chromium, lead, mercury, methylene chloride, selenium, silver, toluene
421	1,1,1-trichloroethane, arsenic, barium, cadmium, chromium, lead, mercury, methylene chloride, silver, selenium, toluene
422	1,1,1-trichloroethane, arsenic, barium, cadmium, chromium, lead, mercury, methylene chloride, silver, selenium, toluene
425[a]	chromium, toluene

17.3.1 Radionuclides

The radionuclides potentially contained in the miscellaneous incinerator ash and soot waste, as well as the chemical form of radionuclide contaminants and radioassay interferences are described in the following sections. Information about radionuclides common to all RF wastes is presented in Section 3.0 of this document.

- The radionuclides of concern for miscellaneous incinerator ash and soot waste are ^{238}Pu, ^{239}Pu, ^{240}Pu, ^{242}Pu, ^{233}U, ^{234}U, ^{238}U, and ^{241}Am.
- The two most prevalent radionuclides expected in the miscellaneous incinerator ash and soot waste containers are ^{239}Pu and ^{240}Pu.
- The remaining WIPP-tracked radionuclides, ^{137}Cs and ^{90}Sr, are not expected to be present in RF wastes in measurable quantities.

Radionuclide contamination is based on the generating process for the wastes that were associated with Building 771. Building 771 wastes may be contaminated with WG Pu, ^{241}Am, and EU.(P163A) Solid waste treatment, repackaging, and size reduction operations were conducted in the SRV in Building 776. The SRV was divided into two sides. One side was the airlock (container Prefixes 0025, 0040, 0041, and 0057) where repackaging was done. The other side (container Prefixes 0019 and 0026) was a drybox atmosphere where size reduction and solid waste treatment activities took place.(C175A, C184A, P067A, U059A) The repacked incinerator waste containers have the potential to contain radionuclides from the incineration processes.(P067A, U077A)

Approximately 90 weight percent of the bulk was exhausted from the incinerator system as combustion product gases. All radionuclide contaminants remained behind after combustion, resulting in an ash having a plutonium concentration of up to 10 weight percent.(C180A, P035A, P163A) The sludge and soot removed from the off-gas system, and the fire brick incinerator liner removed during maintenance activities will contain most of the same constituents as the combustible feed material from which they were derived.(P035A)

The pilot-scale FBI (container prefix 0075) was developed in Building 776 to treat LLW.(C184A, U059A) The wastes fed to the incinerator were contaminated with low levels of plutonium.(P024A) Analysis indicates that the plutonium is weapons-grade.(P125A)

18.0 MISCELLANEOUS HOMOGENEOUS SOLID WASTE

This waste group includes various sludge and solids generated from processes throughout the RF facility. The waste was generated in Buildings 371, 374, 771, 774, 776, and 779.

Historic IDC descriptions and dates of generation for this waste in the AMWTP inventory are presented by IDC in Table 18-1.(P090A, P367A, P368A, P370A, U059A, U069A, U092, U128A) The incinerator sludge wastes (IDC 292) were characterized under the CBFO-approved WSPF INW222.001.(C063A, P001A, P012A, P014A, P024A, P063A, P306A, P286A, P287A, P288A)

Table 18-1. Miscellaneous homogeneous solid waste in the AMWTP inventory.[a]

IDC	Title	Dates of Generation
290	Filter Sludge Plenum Filter Sludge	August 27, 1971
292	Cemented Sludge Incinerator Sludge	July 1974–May 1986
696	Bldg 771 Cemented Incinerator Sludge Cemented Incinerator Sludge (After March 20, 1987)	November 1985–July 1987
806	Solidified Process Sludge Cemented Filter Sludge Cemented Process Solids	April 1987–March 1988
817	Cemented SS and C Heels	October 1986–January 1987
818	Cemented Incinerator Ash Cemented Ash	October 1986
820	Cemented Soot	January 1986–October 1986
823	Cemented Miscellaneous Sludge	January 1987–March 1987

a. Dates of generation are based on available shipping papers and may not reflect the actual inventory at INL due to incomplete records for waste received prior to 1973.

Item Description Code 290—Filter Sludge: Wastes consist of sludge generated from the incinerator off-gas system associated with the plutonium recovery operations in Building 771. The waste was not cemented until after 1974. The waste will be in the form of sludge from filter plenums and Nash pumps and may contain filter plenums, pumps, etc. If present, filters may have an aluminum or wood frame supporting the filter media.(P024A)

Item Description Code 292—Cemented Sludge: This waste consists of sludge generated from the scrubber in the plutonium recovery incinerator in Building 771.(P014A) The sludge consists of fly-ash and diatomite filter media.(P016A, P067A) The sludge's consistency may range from a damp mass with a consistency of paste, to a mass that has been dried to some extent and may contain fines.(P035A, P052A) Portland cement was used as an absorbent for liquids in the sludge.(P024A)

Item Description Code 696 (807b)—Bldg 771 Cemented Incinerator Sludge: IDC 696 (i.e., IDC 807b) is a cemented incinerator sludge that was generated before March 20, 1987. After 1985, the sludge was solidified by pouring the sludge into 1-gallon polyethylene molds mixed with Portland cement and allowed to cure into a puck. The pucks were packaged in a 55-gallon drum. IDC 807 was originally used for cemented incinerator sludge from Building 771. After 1987, IDC 807 was reassigned to Building 374 Solidified Bypass Sludge.(P043A P063A, P064A) The overlap of dates of generation was discovered during the 3,100 m^3 Project.(P043A, P063A, P067A, P098A) For purposes of data management within TRIPS, IDC 696 is used to uniquely identify an IDC 807b subpopulation which was generated before March 22, 1987. Note that IDC 807a was assigned to Building 374 bypass sludge generated after March 21, 1987 and retains the original IDC number 807 (i.e., 807a).

Item Description Code 806—Solidified Process Sludge: This waste consists of various sludge, particulates, and heels immobilized with Portland cement in small (~1-gallon) molds.(P001A, P039A, P098A, D059A) The wastes that were allowed by RF procedure to be included in this IDC were line generated particulate and sludgy wastes (Table 18-2). Some of the sludge may have originated from filter plenums, Nash pumps, laboratories, the plutonium recovery incinerator, or the Size Reduction Facility. Particulates and heels may have been included into the IDC (e.g., graphite; incinerator ash, soot, and fire brick; and sand, slag, crucible wastes, ion-exchange resins, grit blasting media, and salt from clean-out of pyrochemical process lines).(P001A, P039A, D059A)

Item Description Code 817—Cemented SS and C Heels: This waste consists of sand, slag, and crucible heels (IDC 393) generated within gloveboxes. The ID 393 waste was mixed with Portland cement and water and allowed to cure within one-gallon molds or halves of clamshells. The cured pucks were removed from the molds, bagged, and placed in 55-gallon drums.(P016A)

Item Description Code 818—Cemented Incinerator Ash: Beginning in 1985, incinerator ash waste (IDC 420) was immobilized into a solid monolith with Portland cement and water.(C050A, P016A, P059A) Cemented ash puck (IDC 818) waste consists of cemented (IDC 420) incinerator ash from the burn chamber. The sludge, cement, and water mixture was poured into a one-gallon polyethylene container mold and allowed to cure. The puck was removed from the mold and placed in a 55-gallon drum. Several pucks were placed in a drum. The same procedure was followed for cementation of incinerator ash and soot.(P016A, P043A P098A) The waste may contain miscellaneous tramp metal, bits of unburned feed material, clamshells, and carbon from the incomplete oxidation of feed material.(P016A, P043A)

Item Description Code 820—Cemented Soot: IDC 820 wastes consist of immobilized incinerator off-gas soot (IDC 422). Beginning in 1985 the incinerator soot was immobilized by hand with Portland cement and water into a solid monolith.(P016A, P098A, D059A) The sludge, cement, and water mixture was poured into a one-gallon polyethylene container mold/clamshell and allowed to cure. The puck was removed from the mold/clamshell and placed in a 55-gallon drum. Cemented pucks may have been bagged out in groups of three to eight or may have been bagged out individually. Several pucks were placed in a drum.(P016A, P043A, P098A)

Table 18-2. Candidate inorganic particulate wastes immobilized with cement and reassigned IDC 806.(D059A)

IDC	Title	Last Package Date
159	Screenings from Oxide	Not shipped to INL as 159
290	Filter Sludge	August 27, 1971
291	Dried Lab Waste Fluoride Sludge	Not shipped to INL as 291
292	Incinerator Sludge	May 1, 1986
310	Graphite Scarfings and Fines	December 14, 1983
311	Graphite Heels	September 2, 1976
340	Sludge from Size Reduction Area	Not shipped to INL as 340
369	Leco Heels	Not shipped to INL as 369
372	Grit	November 24, 1984
373	Fire brick Heel	Not shipped to INL as 373
378	Fire brick, Pulverized or Fines	Not shipped to INL as 378
393	Sand, Slag, and Crucible Heel	October 2, 1985
394	Sand from Button Break-Out	Not shipped to INL as 394
398	Pulverized Sand, Slag, and Crucible	Not shipped to INL as 398
420	Pulverized Incinerator Ash	April 11, 1984
421	Ash Heel	April 6, 1978
422	Soot	February 6, 1986
423	Soot Heels	Not shipped to INL as 423
425	Fluidized Bed Ash	July 24, 1981
430	Unleached Ion Column Resin	July 29, 1972
431	Resin, Leached	June 15, 1972
432	Resin, Leached and Cemented	August 12, 1986
822	Cemented (432) Resin	February 19, 1987

Item Description Code 823—Cemented Miscellaneous Sludge: This waste consists of various sludge wastes from non-specific sources. The cemented miscellaneous sludge was generated when sludge designated as inorganic particulate and sludgy material below the EDL was placed in one-gallon paint cans and covered with Portland cement or mixed with cement into a block.(P001A)Producton of this cemented waste form was discontinued in the 1980s. The first scenario (use of cement as absorbent) was conducted in Building 771 and the second (solidification into a puck) in Building 371. This could have included IDCs 290 and 299 wastes and was done to meet the WIPP WAC. The material came primarily from Nash pumps in Building 771 and included vacuum grease and oily sludge.(P599A, D059A)

Typical waste material parameters for cemented sludge waste containers, including packaging materials, are listed in Table 18-3. RF waste management and inspection protocol allowed containers of incinerator wastes to contain up to 10 percent of any other RF IDC waste. Other wastes could include various combustible and plastic wastes, Ful-Flo filters laden with grease, empty cement bags, and unused polyethylene bags, clamshells, glass, concrete, metal, leaded gloves.(P016A)

Table 18-3. Typical waste material parameters for cemented sludge waste containers.(P226A, P286A, P402A)

Typical Waste Material Parameter	Examples
Steel (packaging materials)	55-gallon drum
Plastics (packaging materials)	90-mil drum liner, O-ring bag, drum bag
Plastics (waste materials)	Inner container bags, two- or four-liter Nalgene bottles used as inner containers, polyethylene bags, clamshells
Cellulosics	Cardboard liner, fiberboard liner and discs, tape
Other Inorganic Materials	Portland cement, Oil-Dri®, vermiculite[a]
Other Metals	Lead liner
Inorganic Matrix	Incinerator sludge consisting of fly-ash, diatomite filter media, and Portland cement

a. Portland cement may not be distinguishable from the inorganic matrix, since the cement will be located inside the inner containers.

18.1 Waste Generation

Miscellaneous homogeneous solid wastes were generated by production, recovery, purification, laboratory, treatment, maintenance, and R&D activities associated with plutonium operations at the site. Process flow diagrams for combustibles, plastic waste, and sludge generating processes are provided in archived WSRIC information.(P060A, P061A, P062A, P070A, P077A, P078A, P079A, P081A, P082A) See Section 3.0 for details of the waste generating processes.

IDC 290 wastes were generated from the incinerator off-gas system associated with the plutonium recovery operations Building 771. The waste is sludge from filter plenums and Nash pumps. The waste was not cemented until after 1974. IDC 290 was replaced with IDC 292 in 1974.(P024A) The consistency is expected to be similar to that of IDC 292.

IDC 292 waste consists of sludge generated from the scrubber in the plutonium recovery incinerator in Building 771.(P014A) Two air-to-gas heat exchangers drew in-room air to help cool the incinerator off-gas before it passed through a caustic scrubber, and a venturi which increased the scrubbing efficiency of the potassium hydroxide caustic scrubber solution. After the off-gas passed through the scrubber, it was filtered through the incinerator filter plenum. Cooling air from the heat exchangers was filtered through the incinerator filter plenum and then through the main filter plenum where the gases were combined with other glovebox exhaust gases.(P061A)

The potassium hydroxide solution from the scrubber was processed through the drum filter where particulate matter (fly ash) was entrained on diatomite filter media.(P067A) Sludge, which consisted of fly ash and diatomite filter media,(P016A, P067A) was discarded as solid waste (IDC 292) if the plutonium was below the EDL, or was sent for recovery if the plutonium was above the EDL.(P016A, P061A, U013A) The sludge's consistency may range from a damp mass with a consistency of paste, to a mass that has been dried to some extent and may contain fines.(P035A, P052A) Portland cement was used as an absorbent for liquids in the sludge.(P024A) After 1985 the sludge was poured into one-gallon polyethylene molds and allowed to cure into a puck. The puck was placed into a 55-gallon drum.

IDC 696 (i.e., IDC 807b) is cemented incinerator sludge. After 1985 the sludge was poured into one-gallon polyethylene molds and allowed to cure into a puck. The puck was placed into a 55-gallon drum.(P043A, P063A, P067A, P098A)

IDC 806 waste consists of various sludge, particulates, and heels immobilized into a solid monolith with Portland cement.(P001A, P039A, P098A) The sludge was a catch-all for sludge generated from non-routine operations. Some of the sludge may have originated from filter plenums, Nash pumps, laboratories, the plutonium recovery incinerator, or the Size Reduction Facility. Particulate wastes, such as grit, ash, and heel, may have been mixed together prior to immobilization.(P098A) Any variety of particulates could be included in this IDC (e.g., heels included graphite; incinerator ash, soot, and fire brick; and sand, slag, and crucible waste, ion-exchange resins, grit blasting media, and salt from clean-out of pyrochemical process lines).(P001A, P039A) Even though the sludges and resins were cemented separately, no documentation was available to determine which drums contain the sludges or resins.(C044A) Therefore, it will be assumed that miscellaneous cemented wastes (IDCs 806 and 823) may contain any of the wastes that were immobilized. Most of the time, the waste was solidified into pucks.

IDC 817 waste consists of sand, slag, and crucible heels mixed with Portland cement and allowed to cure within the gloveboxes in 1-gallon molds or halves of clamshells (e.g., clamshell pucks). Portland cement and water were mixed, and approximately 1 liter of the heel material

was mixed in until completely coated with cement. After being removed from the mold, the solidified puck was placed in a 55-gallon drum. Cemented pucks/molds may have been bagged out in groups of three to eight or may have been bagged out individually. Several pucks were placed in a drum.(P016A, P098A) Beginning in 1985, sand, slag, and crucible heels (IDC 393) were immobilized into a solid monolith with Portland cement and water. (C050A, P016A) The cemented sand, slag, and crucible heels were assigned IDC 817.(P016A)

Cemented ash puck (IDC 818) waste consists of incinerator ash from the burn chamber. It was immobilized by hand with Portland cement into a solid monolith or puck. The sludge, cement, and water mixture was poured into a one-gallon polyethylene container mold and allowed to cure. The puck was removed from the mold and placed in a 55-gallon drum. The same procedure was followed for cementation of incinerator ash and soot.(P016A, P043A, P098A) Cemented pucks/monoliths may have been bagged out in groups of three to eight or may have been bagged out individually. Several pucks were placed in a drum. The waste may contain miscellaneous tramp metal, bits of unburned feed material, clamshells, and carbon from the incomplete oxidation of feed material.(P016A, P043A)

IDC 820 waste consists of soot (IDC 422) generated from the clean-up of the incinerator off-gas system. The soot was immobilized by hand into a solid monolith with Portland cement and water.(P016A, P098A) Beginning in 1985, incinerator sludge, ash, and soot wastes (IDCs 292, 420, and 422) were immobilized into a solid monolith with Portland cement and water.(C050A, P016A) The sludge, cement, and water mixture was poured into a one-gallon polyethylene container mold/clamshell and allowed to cure. The puck was removed from the mold/clamshell and placed in a 55-gallon drum.(P016A, P043A, P098A)

IDC 823 waste consists of various wastes immobilized into a solid monolith with Portland cement. The generation process is the same as that identified for IDC 806 and, like IDC 806, the sludge was a catch all for sludge generated from non-routine operations.(P016A) Sludge wastes were cemented separately as were resin wastes. Particulate wastes, such as grit, ash, and heel, may have been mixed together prior to immobilization.(P098A) Even though the sludge and resins were cemented separately, no documentation was available to determine which drums contain the sludge or resins.(C044A) Therefore, it will be assumed that miscellaneous cemented wastes (IDCs 806 and 823) may contain any of the wastes that were immobilized. Individual containers of IDC 823 processed material were assayed by the in-line can counter.

18.2 Waste Packaging

18.2.1 Drums

Incinerator plenum filter sludge (IDC 290) was packaged in one-quart ice cream cartons. The carton lid was placed on the carton and sealed with tape. It is believed that each carton was placed in a plastic bag and then placed in a Volrath 88022 stainless steel can. The can lid was placed on the can and sealed with tape. The cans were assayed and then placed in a prepared 55-gallon drum depending on assay results. An estimated 20–25 cans will fit into a drum depending up plutonium content.

Incinerator sludge (IDC 292) packaged prior to 1977 was placed in a PVC bag and sealed with tape. The bag was then double-contained in plastic and placed in a 1-gallon metal paint can containing Portland cement. Additional cement was added to the top of the waste before the paint can lid was closed. Beginning in 1977, the sludge was collected in 2- or 4-liter Nalgene bottles. Portland cement was added in layers as the bottle filled with sludge. The sludge was capped with cement, the bottle lid was installed, and the bottle was double-bagged.(P016A, P024A) The sludge may also be packaged in several plastic bags within the drum.(P015A) Each individual package was bagged out of the glovebox and placed in two plastic bags that were sealed with tape. In addition, drums of incinerator sludge (IDC 292) may be lead-lined. The packages were assayed and placed into a 55-gallon drum. Up to 25 cans or 20 bottles were placed in a drum depending on assay.(P016A, P024A)

IDC 696 (i.e., IDC 807b) is cemented incinerator sludge. After 1985 the sludge was poured into one-gallon polyethylene molds and allowed to cure into a puck. The puck was placed into a 55-gallon drum. Cemented pucks may have been bagged out in groups of three to eight or may have been bagged out individually. Some plastics may be found within this IDC (e.g., clamshells). Packaging for IDC 696 is assumed to be the same as that for other cemented incinerator sludge (i.e., IDC 292).

IDC 806 waste consists of various sludge, particulates, and heels immobilized into a solid monolith with Portland cement.(P001A, P039A, P098A) The sludge was a catch-all for sludge generated from non-routine operations. Some of the sludge may have originated from filter plenums, Nash pumps, laboratories, the plutonium recovery incinerator, or the Size Reduction Facility. Any variety of particulates could be included in this IDC (e.g., heels included graphite; incinerator ash, soot, and fire brick; and sand, slag, and crucible waste, ion-exchange resins, grit blasting media, and salt from clean-out of pyrochemical process lines).(P001A, P039A) Most of the time, the waste was immobilized into pucks. Immobilized pucks may have been bagged out in groups of three to eight or may have been bagged out individually.

IDC 817 waste consists of sand, slag, and crucible heels mixed with Portland cement and allowed to cure within one-gallon molds or halves of clamshells (e.g., clamshell pucks). Portland cement and water were mixed, and approximately one liter of the heel material was mixed in until completely coated with cement. After being removed from the mold, the solidified puck was placed in a 55-gallon drum. Cemented pucks/molds may have been bagged out in groups of three to eight or may have been bagged out individually. Several pucks were placed in a drum.(P016A, P098A) Beginning in 1985, sand, slag, and crucible heels (IDC 393) were immobilized into a solid monolith with Portland cement and water.(C050A, P016A) The cemented sand, slag, and crucible heels were assigned IDC 817.(P016A)

Cemented ash puck (IDC 818) waste consists of incinerator ash from the burn chamber. It was immobilized by hand with Portland cement into a solid monolith or puck. The sludge, cement, and water mixture was poured into a one-gallon polyethylene container mold and allowed to cure.(P016A, P043A, P098A) Cemented ash pucks were double bagged out of the glovebox and placed into a 55-gallon drum.(P012A, P016A) Cemented pucks/monoliths may have been bagged

out in groups of three to eight or may have been bagged out individually. The waste may contain miscellaneous tramp metal, bits of unburned feed material, clamshells, and carbon from the incomplete oxidation of feed material.(P016A, P043A)

IDC 820 soot was immobilized by hand into a solid monolith with Portland cement and water.(P016A, P098A) Beginning in 1985, incinerator sludge, ash, and soot wastes (IDCs 292, 420, and 422) were immobilized into a solid monolith with Portland cement and water.(C050A, P016A) The sludge, cement, and water mixture was poured into a one-gallon polyethylene container mold/clamshell and allowed to cure. The puck was removed from the mold/clamshell and placed in a 55-gallon drum. Cemented pucks may have been bagged out in groups of three to eight or may have been bagged out individually. Several pucks were placed in a drum.(P016A, P043A, P098A)

IDC 823 waste consists of various wastes immobilized into a solid monolith with Portland cement. The waste was packaged the same manner as IDC 806. The solidified pucks were then bagged out of the glovebox, double-bagged, and placed into a 55-gallon drum. Most of the time, the waste was immobilized into pucks. The solidified pucks were then bagged out of the glovebox, double-bagged, and placed into a 55-gallon drum. Immobilized pucks may have been bagged out in groups of three to eight or may have been bagged out individually.

Depending on waste packaging requirements at the time, several combinations of bags and liners were used to prepare 55-gallon drums for shipment. From 1970 to 1972, waste drums were lined with one or two polyethylene drum bags. Cardboard liners might have been used to line the inner drum bag. Use of 90-mil rigid polyethylene liners began in 1972.(P024A) A rigid liner was placed in each drum and lined with one polyethylene round bottom drum liner or two polyethylene drum bags.(P008A, P012A, P016A, P063A, P064A) A PVC O-ring bag and a polyethylene bag placed inside the rigid liner were used if the drum was attached to a glovebox.(P016A) A fiberboard liner and discs may also have been used between the waste and the drum liners.(P008A, P012A, P016A, P063A, P064A) When a drum was full, the drum liners were twisted and taped closed, the lid was secured with a bolted ring, and a tamper indicating device was attached to the drum.(P001A, P016A, P024A, P043A)

During the 3,100 m^3 Project, several combinations of round bottom drum liner bags, O-ring bags, and polyethylene bags were identified by characterization RTR and VE, including drums with no layers of containment (i.e., no drum bags). In addition, some drums packaged in 1972 and later may not include a rigid 90-mil liner. These configurations are atypical but do not impact WMC or HWN assignments.

Waste management practices for RF indicate twist and tape method for bag closure; however, a stub bag that is a heat-sealed filtered bag may be found in some containers that were visually examined at ANL-W as part of a previous VE program. RTR/VE also identified a filtered bag in a RF drum that was not visually examined by ANL-W. In addition, RTR/VE has identified twisted and tied or fold and tape as the method of bag closure.(P402A, P445A)

After drums were inspected, one to two quarts of absorbent material (Oil-Dri®) was placed on top of the outer, sealed polyethylene drum bag. This procedure was changed in February 1982 when vermiculite was used to fill the space between the outer, sealed polyethylene drum bag and the top of the 90-mil rigid liner. The quantity of vermiculite varied from three to twelve pounds according to the amount of waste contained in each drum.(P024A) During RTR examinations for the 3,100 m^3 Project, some IDC 292 wastes contained quantities of absorbent that varied from expected quantities, absorbents other than Oil-Dri® or vermiculite were identified, or absorbents were not detected.(P286A, P306A)

During RTR examinations of sludge containers, quantities of absorbent were identified that varied significantly from expected quantities, or absorbent was identified outside of expected timeframes. In addition, some containers contained an absorbent other than that expected or contained no absorbent at all. These absorbent configurations are atypical but do not impact WMC or HWN assignments.

18.2.2 Boxes

The AMWTP container inventory does not include any miscellaneous homogeneous solid waste that is packaged in boxes. (C289A, P024A)

18.3 Waste Characterization

Miscellaneous homogeneous solid waste is characterized based on knowledge of the material, knowledge of the processes generating the waste, RTR/VE, waste analysis, and headspace gas analysis. These wastes are at least 50 percent by volume inorganic sludge and are classified as homogeneous waste.(P141A) Potential hazardous chemical constituents assigned to this group of IDCs by AK documentation are identified in Table 18-4. There is no evidence that indicates PCBs in concentrations greater than 50 parts per million. Items that contain PCBs (e.g., light ballasts) are not expected to be present.(P393A)

Table 18-4. Potential hazardous chemical constituents of miscellaneous homogeneous solid waste.

IDC	Chemical Constituents(C245A, P015A, P016A, P024A, P307A, P368A)
290	None
292	1,1,1-trichloroethane, 1,1,2-trichloro-1,2,2-trifluoroethane, acetone, arsenic, barium, benzene, cadmium, chloroform, chromium, cyanide cleaning bath solutions, cyanide plating bath solutions, electroplating sludges, lead, mercury, methanol, methylene chloride, silver, selenium, tetrachloroethylene, toluene, trichloroethylene, xylene
696/ 807b	1,1,1-trichloroethane, 1,1,2-trichloro-1,2,2-trifluoroethane, acetone, arsenic, barium, benzene, cadmium, chloroform, chromium, cyanide cleaning bath solutions, cyanide plating bath solutions, electroplating sludges, lead, mercury, methanol, methylene chloride, silver, selenium, tetrachloroethylene, toluene, trichloroethylene, xylene
806	1,1,1-trichloroethane, 1,1,2-trichloro-1,2,2-trifluoroethane, 1-butanol, carbon tetrachloride, lead, methanol, methylene chloride, xylene
817	1,1,1-trichloroethane, 1,1,2-trichloro-1,2,2-trifluoroethane, 1-butanol, carbon tetrachloride, lead, methanol, methylene chloride, xylene
818	1,1,1-trichloroethane, 1,1,2-trichloro-1,2,2-trifluoroethane, 1-butanol, carbon tetrachloride, lead, methanol, methylene chloride, xylene
820	1,1,1-trichloroethane, 1,1,2-trichloro-1,2,2-trifluoroethane, 1-butanol, carbon tetrachloride, lead, methanol, methylene chloride, xylene
823	1,1,1-trichloroethane, 1,1,2-trichloro-1,2,2-trifluoroethane, 1-butanol, carbon tetrachloride, lead, methanol, methylene chloride, xylene

18.3.1 Radionuclides

The radionuclides potentially contained in the miscellaneous homogeneous solid waste, as well as the chemical form of radionuclide contaminants and radioassay interferences are described in the following sections. Information about radionuclides common to all RF wastes is presented in Section 3.0 of this document.

- The radionuclides of concern for miscellaneous homogeneous solid waste are ^{238}Pu, ^{239}Pu, ^{240}Pu, ^{242}Pu, ^{233}U, ^{234}U, ^{238}U, and ^{241}Am.
- The two most prevalent radionuclides expected in the miscellaneous homogeneous solid waste containers are ^{239}Pu and ^{240}Pu.
- The miscellaneous homogeneous solid waste could be contaminated with WG Pu, ^{241}Am, and EU, ^{245}Cm, ^{244}Cm, ^{243}Am and ^{40}K.
- The remaining WIPP-tracked radionuclides, ^{137}Cs and ^{90}Sr, are not expected to be present in measurable quantities.

Radionuclide contamination is based on the generating process for the wastes that were associated with Building 771. Building 771 wastes may be contaminated with WG Pu, ^{241}Am, and EU. The SRV in Building 776 conducted repackaging in an airlock(P078A, U059A) and as a result various containers (i.e., containers with a prefix of 0025) could have been generated from any of the processes that generated miscellaneous homogeneous solid waste.(P078A)

Additionally, a single drum of IDC 806 was generated by hydride operations (prefix 0055) in Building 779. The hydriding process recovered plutonium from various substrates.(P062A, P163A, U059A) These processes produced plutonium metal for use in the foundry or non-specification feed to pyrochemical operations in addition to plutonium oxides sent for aqueous recovery.(P062A, P163A)

Radioassay interferences may include polypropylene from Ful-Flo filters, cadmium or chromium from HEPA filter frames, aluminum foil used as a spacer between the folds of the filter media, and Nomex, which is an aromatic polyamide fiber used in HEPA filters at five to seven weight percent.(P035A, P052A)

19.0 RASCHIG RINGS

This waste group consists of Raschig rings generated by the production, recovery and purification, laboratory, R&D, waste treatment, and maintenance activities associated with plutonium operations. The wastes were generated in Buildings 371, 559, 707, 771, 776, 777, and 886.(P024A, P052A, P076A, P090A, P635A)

The Raschig ring waste was characterized under a CBFO-approved WSPF, INW247.001, for containers of waste shipped to the WIPP facility by the 3,100 m^3 Project.(P214A, P223A) Historic IDC descriptions and dates of generation for this waste in the AMWTP inventory are presented by IDC in Table 19-1.(P090A, P367A, P368A, P370A, U059A, U069A, U092, U128A)

Table 19-1. Raschig ring waste in the AMWTP inventory.

IDC	Title	Dates of Generation[a]
441	Raschig Rings, Unleached Unleached Raschig Rings(P001A)	February 1972–July 1986
442	Raschig Rings, Leached Leached Raschig Rings(P001A)	May 1972–June 1988

a. Dates of generation are based on available shipping papers and may not reflect the actual inventory at INL due to incomplete records for waste received prior to 1973.

Item Description Code 441—Raschig Rings, Unleached: This waste consists of Raschig rings which are borosilicate glass rings used to maintain subcritical conditions in fissile solution storage tanks that were not safe by dimension. The boron in the rings is a neutron poison, an element that absorbs neutrons. The volume of the ring displaces a proportionate volume of solution and, in combination with the boron, creates a critically safe configuration. When the rings were replaced, they were assayed. If the plutonium content was below the EDL, they were assigned IDC 441.(P052A) In 1989 (after the last shipment of RF waste to INL), IDC 443 was created for sorting of solvent-contaminated Raschig rings from non-solvent contaminated Raschig rings.(C069A)

Item Description Code 442—Raschig Rings, Leached: This waste consists of borosilicate glass Raschig rings (same as IDC 441) contaminated with plutonium above the EDL.(P052A) The rings were leached in nitric acid or water to remove the plutonium contamination and repackaged as IDC 442.(P012A)

Typical waste material parameters for unleached and leached Raschig rings waste containers, including typical packaging materials, are presented in Table 19-2.(P223A, P368A, P635A) RF waste management and inspection protocol allowed containers of wastes to contain up to 10 percent of an IDC other than that assigned to the container.(P016A) Items identified in containers during the 3,100 m^3 Project are listed in detail in INEL-96/0280 and include a variety of plastic and metal items, including horsetail stubs, plastic bags, plastic containers, plastic tubing, plastic piping, plastic sheeting; metal bands, Volrath cans, flashlight, and D-cell batteries. AK confirmation activities also identified small quantities of liquid in some containers.(P368A)

Table 19-2. Typical waste material parameters for unleached and leached Raschig rings waste containers.

Typical Waste Material Parameter	Examples
Steel (packaging materials)	55-gallon drum
Plastics (packaging materials)	90-mil drum liner, O-ring bags, drum bags
Other Inorganic Materials	Raschig rings, vermiculite, Oil-Dri®
Plastic (waste materials)	Inner container bags, poly bottles
Cellulosics	Cardboard liner, fibre-pak
Other metals	Lead liner

19.1 Waste Generation

Raschig rings were contained in tanks used by plutonium production, recovery and purification, laboratory operations, R&D, and waste treatment and were generated from maintenance and utilities activities at the site. Over time, Raschig rings would become broken or otherwise damaged and were replaced. The rings were also replaced if the assay of the tank exceeded acceptable limits.(P052A) Except for details relevant only to this waste stream, these operations are discussed in Section 3.0 of this document.

Building 777 contained two organic solvent collection and filtration systems, which used tanks filled with Raschig rings. The carbon tetrachloride system collected, filtered, and distributed waste carbon tetrachloride for eventual treatment in Building 774, and employed three Raschig ring-filled tanks. Other contaminants which could be in the system included Freon TF (1,1,2-trichloro-1,2,2-trifluoroethane), coolant oils, vacuum pump oil, and sight gauge oil. The 1,1,1-trichloroethane filtration system collected and filtered 1,1,1-trichloroethane from several ultrasonic wash tanks and employed two tanks filled with Raschig rings.(P052A, P079A)

Recovery operations in Building 771 used acid to dissolve solid materials containing plutonium. Raschig ring-filled tanks containing acid or caustic were used in these processes.(P052A) Building 771 also recovered plutonium from Raschig rings. Until 1984, Raschig rings containing plutonium above the EDL were leached with hot nitric acid. After leaching, the rings were rinsed with water and air-dried before packaging.(P016A, P061A)

Building 559 housed the Plutonium Analytical Laboratory, which was responsible for spectrochemical, chemical, and mass spectrometric analyses of samples from plutonium production operations. Uranium, Raschig rings, solutions, and commercial product and gas samples were also analyzed in the laboratory. Plutonium production samples, including metal and oxide, were prepared and subdivided in analysis in the sample cutting process.(P053A, P067A, P076A)

New and used Raschig rings were tested at the Building 559 laboratory to ensure integrity and specification compliance. Used Raschig rings were removed from various tanks and were typically contaminated with plutonium, uranium, and occasionally sludge. Neutron absorption, chemical resistance, durability, and strength tests were performed on the rings. Chemical resistance tests exposed the rings to nitric acid or sodium hydroxide. The nitric acid and sodium hydroxide were rinsed from the rings and were then dried prior to disposal.(P076A)

After processing of solid wastes below the EDL in Building 776, water and KW detergent were used to wash the vault floor. The wastewater was filtered and then stored in Raschig ring-filled tanks in Building 776 for eventual treatment.(P052A, P078A)

The majority of the Raschig ring waste was generated by changing out Raschig rings from plutonium component production, plutonium recovery and purification, and waste treatment process tanks. Raschig ring change out was a routine maintenance operation in which rings were sampled, removed, and replaced.

Process tanks were inspected periodically and the rings were replaced if the assay of the tank exceeded acceptable limits. Change out would also occur when the Raschig rings reached the end of their useful life (about five years), or became broken or otherwise damaged. This was determined by sampling and analysis or by VE. The Raschig rings were replaced when the sampling showed wall thinning in the rings due to corrosion, loss of boron in the rings, or buildup of solid material in the tank. Raschig rings were also replaced if rings could no longer be sampled.(P014A, P035A, P052A)

During the change out process, the tank was drained and flushed with a compatible solution. For example, tanks containing nitric acid were flushed with nitric acid, tanks containing 1,1,1-trichloroethane were flushed with 1,1,1-trichloroethane , and tanks containing oil and carbon tetrachloride were flushed with carbon tetrachloride.(P024A) Raschig rings were also generated when Raschig ring tanks were removed and replaced with equipment which is safe by geometric design (e.g., annular tanks).(P035A)

Utility systems include HVAC systems, fume scrubbers, and process vacuum systems. Scrubber tanks and vacuum traps and receivers contained Raschig rings.(P052A, P055A, P061A, P067A, P081A)

19.2 Waste Packaging

Raschig ring waste removed from gloveboxes were double- or triple-contained in plastic bags or placed in polyethylene bottles and double-bagged out of the glovebox.(P009A, P012A, P024A) Raschig rings removed from a tank were contained in up to three PVC or polyethylene bags which were placed in a Fibre-Pak.(P012A, P022A, P024A, U011A) Raschig rings were bagged out of the leaching glovebox line in two plastic bags and were also placed in a Fibre-Pak. Two Fibre-Paks were placed in a prepared 55-gallon drum. Raschig rings from the laboratory were broken into quarter-inch diameter fragments for analysis. After analysis, the fragments were placed in 4-liter polyethylene bottles, double-bagged out of the glovebox, and placed in a prepared

55-gallon drum.[P024A] Some of the Raschig ring waste was subsequently repackaged from drums into boxes.[P016A]

19.2.1 Drums

Depending on waste packaging requirements at the time, several combinations of bags and liners were used to prepare 55-gallon drums for shipment. From 1970 to 1972, waste drums were lined with one or two polyethylene drum bags. Cardboard liners might also have been used to line the inner drum bag. Use of the 90-mil rigid polyethylene liner began in 1972.[P024A] The rigid liner was placed in each drum and lined with one polyethylene round bottom drum liner or two polyethylene drum bags.[P008A, P012A, P016A, P024A, P063A, P064A] A PVC O-ring bag and a polyethylene bag were used if the drum was attached to the glovebox.[P016A] A fiberboard liner and discs may also have been used between the waste packages and the drum liners.[P008A, P012A, P016A, P063A, P064A] Lead-lined drum liners may also have been used in some instances.[P635A] When a drum was full, the drum liners were twisted and taped closed, the lid was secured with a bolted ring, and a tamper-indicating device was attached to the drum.[P012A, P016A, P024A]

Waste management practices for RF indicate twist and tape method for bag closure; however, a stub bag that is a heat-sealed filtered bag may be found in some containers that were visually examined at ANL-W as part of a previous VE program. RTR/VE also identified a filtered bag in a RF drum that was not visually examined by ANL-W. In addition, RTR/VE has identified twisted and tied or fold and tape as the methods of bag closure.

RTR/VE has observed containers with a package closure date after 1972 that do not have a rigid liner. RTR/VE has also observed that several combination of drum bags, small poly bags, and O-ring bags were used to package RF wastes. Any combination of plastic bags, provided that six layers of containment, two of which are drum liner bags, were not exceeded, does not impact acceptability of the drum for shipment to WIPP.

After drums were inspected, 1 to 2 quarts of absorbent material (Oil-Dri®) was placed on the top of the outer, sealed polyethylene drum bag. This procedure changed in February 1982, when vermiculite was used to fill the space between the outer, sealed polyethylene drum bag and the top of the 90-mil rigid liner. The quantity of vermiculite varied from 3to 12 pounds, according to the amount of waste contained in each drum.[P009A, P024A] Examinations of this waste form during the 3,100 m^3 and AMWTP projects indicate that quantities of absorbent can vary significantly from expected quantities, and some drums may contain no absorbent. In addition, Oil-Dri® and vermiculite may be used in some drums outside of expected time periods.[P223A]

19.2.2 Boxes

Drums were held in size reduction in Building 776 until enough waste had accumulated to fill a waste box. The wastes were then repackaged into boxes. Plywood boxes coated with FRP were used for waste shipped to INL from 1972 through 1982. In 1982, the use of the corrugated metal box was phased in. The last FRP-coated box was shipped to INL in 1986. In the interim, wastes packaged in both types of boxes were shipped to INL. Inner liners used for

contamination control during loading consisted of a PVC liner protected by a fiberboard sheet/liner. All items that had a potential to puncture or otherwise compromise the integrity of the waste box were adequately prepackaged to cover sharp corners.(P016A)

19.3 Waste Characterization

Raschig rings were characterized based on knowledge of the material, knowledge of the processes generating the waste, RTR review of the waste, VE, and headspace gas analysis. Raschig rings were originally classified as homogeneous wastes in the WIPP Transuranic Waste Baseline Inventory Report.(P141A) However, this waste contains at least 50 percent by volume materials that meet the WAP criteria for classification as debris, and should be classified a heterogeneous waste. Potential hazardous chemical constituents assigned to this group of IDCs by AK documentation are identified in Table 19-3.(D055A, P635A) PCBs are not expected to be found in concentrations greater than 50 parts per million within this waste stream.(P393A)

Table 19-3. Potential hazardous chemical constituents of Raschig rings waste.

IDC	Chemical Constituents(P015A, P368A)
441	1,1,1-trichloroethane, carbon tetrachloride, 1,1,2-trichloro-1,2,2-trifluoroethane, lead
442	1,1,1-trichloroethane, carbon tetrachloride, 1,1,2-trichloro-1,2,2-trifluoroethane, lead

19.3.1 Radionuclides

The radionuclides potentially contained in the combustible and plastic wastes, and radioassay interferences, are described in the following sections. Information about radionuclides common to all RF wastes is presented in Section 3.0 of this document.

- The radionuclides of concern for IDCs 441 and 442 are ^{238}Pu, ^{239}Pu, ^{240}Pu, ^{242}Pu, ^{233}U, ^{234}U, ^{238}U, and ^{241}Am.
- The two most prevalent radionuclides expected in the Raschig ring waste containers are ^{239}Pu and ^{240}Pu.
- The remaining WIPP-tracked radionuclides, ^{137}Cs and ^{90}Sr, are not expected to be present in measurable quantities.

Radioassay interference in all Raschig rings will be caused by the presence of boron, which is a neutron absorber.(P052A) The rings contain 11.8 to 13.8 weight percent boron oxide with a ^{10}B/^{11}B isotopic ratio of not less than 0.24. The borosilicate type glass used in Raschig rings has a density of not less than 2.2 grams per cubic centimeter.(P024A)

20.0 SOLIDIFIED AQUEOUS WASTE—BUILDING 374

This waste group consists of aqueous sludges generated by liquid waste treatment operations in Building 374 at RF. Aqueous wastes from numerous buildings and processes at the plant were received in Building 374 where they were treated to remove radioactive and chemical contaminants. Chemical contaminants were removed using evaporation. Radioactive contaminants were removed using neutralization, precipitation, flocculation, and clarification techniques. The slurry containing the radioactive contaminants was filtered producing a moist sludge. The sludge was dried, mixed with an absorbent material, or dried and mixed with cement and water.

The Building 374 solidified aqueous waste was characterized under a CBFO-approved WSPF, INW218.001, for containers of waste shipped to WIPP during the 3,100 m^3 Project.(P218A, P220A, P238A) Historic IDC descriptions and dates of generation for this waste in the AMWTP inventory are presented by IDC in Table 20-1.(P090A, P367A, P368A, P370A, U059A, U069A, U092, U128A)

Table 20-1. Building 374 solidified aqueous waste in the AMWTP inventory.

IDC	Title	Dates of Generation[c]
007	Building 374 Dry Sludge Bldg. 374 Dry Sludge(C063A) Dried Sludge(P014A) Wet Sludge–Bldg. 374(C063A)	August 1982–March 1987[a]
803	Solidified DCP Sludge Wet Sludge-Cemented(C063A) Solidified Sludge–Bldg. 374A (DCP)(C031A, P420A)	April 1986–May 1987
807a[b]	Building 374 Bypass Sludge (After 3/21/87) Solidified By-pass Sludge–Bldg. 374(C031A)	March 21, 1987–1991

a. Does not include containers with a prefix of RD95 and pack dates of April 1995–April 1996.

b. IDC 807 was assigned to cemented incinerator sludge generated from October 23, 1985 to March 21, 1987 (Section 14.0). An overlap of dates of generation was discovered during the 3,100 m^3 Project.

c. Dates of generation are based on available shipping papers and may not reflect the actual inventory at INL due to incomplete records for waste received prior to 1973.

Item Description Code 007—Building 374 Dry Sludge: This waste consists of either a sludge that has been dried in a dryer, or a moist sludge mixed with Portland cement, or a diatomite and Portland cement mixture. The dried sludge was produced from January 1981 to October 1982, and may not be included in the INL inventory based on the package dates for IDC 007 in storage. The moist sludge was produced from 1982 to 1987.(P052A)

Item Description Code 803—Solidified DCP Sludge: This waste consists of sludge dried in a dryer, and mixed with Portland cement and water, which cured to form a solid monolith. IDC 803 was only generated for about a year.(P052A)

Item Description Code 807a—Building 374 Bypass Sludge (After 3/21/87): This waste consists of sludge that bypassed the dryer, and was mixed with diatomite and Portland cement. IDC 807a sludge is the same as the IDC 007 sludge generated using the bypass system. IDC 807a was generated from March 1987 to 1991.(P052A, U092A)

Prior to 1987, IDC 807a was assigned to cemented incinerator sludge from Building 771 (Section 18.0). The overlap of dates of generation was discovered during the 3,100 m^3 Project. It was determined that only one container of IDC 807a (IDRF074705736) was generated prior to the generation start date shown in Table 20-1.(C010A, C063A, C114A, P043A)

Typical waste material parameters for Building 374 sludge examined during the 3,100 m^3 and AMWTP projects, including typical packaging materials, are presented in Table 20-2.(P368A) RF waste management and inspection protocol allowed containers of wastes to contain up to 10 percent of an IDC other than that assigned to the container.(P016A) Acceptable knowledge confirmation activities have identified other items in a small percentage of the sludge waste containers, including small quantities of liquid, lead items, and metal items.(P238A)

Table 20-2. Typical waste material parameters for solidified aqueous waste containers.(P368A)

Typical Waste Material Parameter	Examples
Steel (packaging materials)	55-gallon drum
Plastics (packaging materials)	90-mil drum liner, O-ring bag, drum bag
Other Inorganic Materials	Absorbents (e.g., Diatomite and Oil-Dri®)[a]
Inorganic Matrix	Moist sludge layered with cement or cement/diatomite mixture

a. Only the absorbent located on top of the drum was expected to be distinguishable from the layered sludge.

20.1 Waste Generation

Rocky Flats treated both liquid and solid process wastes. Liquid waste treatment operations had relatively few process changes over the years. Building 374 went into operation in 1980 as an integral part of the new plutonium recovery facility, Building 371. It was designed to handle primarily the wastes generated by Building 371, but also helped to relieve the demand on Building 774.(P053A) Only aqueous waste that contained plutonium below the EDL was processed in Building 374.(P001A) Aqueous treatment operations included radioactive decontamination, evaporation, acid neutralization, and sludge solidification.(P052A, P082A, P106A, P113A)

20.1.1 Radioactive Decontamination

Aqueous wastes containing greater than 13,500 picocuries per liter alpha contamination were treated in the radioactive decontamination process. The wastes were received by pipeline from Buildings 371, 444, 559, 707, 774, 776, 779, 865, 881, 883, and 889.(C087A, U049A) The

treatment process involved three separate stages of precipitation, flocculation, and clarification.(P450A)

The first-stage feed tank, D-812, received supernatant from the sludge solidification process and basic waste solutions from Building 371. If needed, the pH of the solutions was adjusted to 10.5 or greater with potassium hydroxide. The basic solutions were pumped to a reactor tank where reagents, including magnesium sulfate, calcium chloride, and ferric sulfate, were added, which attracted and combined with the radioactive nuclides. The reactor contents were mixed with an agitator and flowed continuously by gravity to a flocculator tank. A flocculent was added to aid in agglomeration of the precipitate. The contents were mixed with an agitator and continuously overflowed to a clarifier. A rake at the bottom of the clarifier slowly moved the solids to the center, where they were drawn off the bottom of the tank into the feed tanks, D-824 A and B, for the sludge solidification process.(P004A, P106A, P113A, P450A)

The first-stage clarifier liquids flowed over a weir and were pumped to the second-stage feed tank. The second-stage feed tank also received third-stage clarifier effluent, steam condensate and decontamination wastewater from Building 371, wastes from Building 444, and from the 500, 700, and 800 areas.(C087A, C121A, U045A, U049A, U051A) The second- and third-stage reactors, flocculators, and clarifiers functioned exactly as the first stage.(P004A, P106A, P113A) Figure 20-1 shows the radioactive decontamination process.(P052A)

20.1.2 Evaporation

The evaporation process concentrated soluble materials from low-level desaltable aqueous wastes. Aqueous wastes were received from Buildings 122, 123, 443, 444, 447, 460, 559, 561, and 566. Clarifier effluent from the radioactive decontamination process, solar pond water, and aqueous wastes from buildings in the 700 and 800 areas were also sent to the evaporator.(P052A, U045A) The aqueous wastes were pumped to the evaporator where they were continuously circulated and heated by steam producing concentrated salt brine and steam. The steam was condensed for use by the boiler plant and cooling tower. The salt brine was dried, using a spray drier, and immobilized with cement.(P153A) Periodically, a nitric and phosphoric acid descaling solution was used to flush the evaporator heat exchangers. This solution was then sent to the sludge immobilization process.(P106A) The evaporation process is shown in Figure 20-1.(P052A)

20.1.3 Acid Neutralization

Nitric acid wastes from plutonium recovery operations in Building 371 were received in Building 374 by pipeline. Acid wastes were also received as packaged materials in 55-gallon drums from Buildings 123, 444, 460, 559, 774, 865, 881, and 883.(U045A) The acid wastes were continuously mixed by an agitator in Tank D-808, and by circulation through a heat exchanger. The heat exchanger removed heat generated during the process. As the liquid circulated, a pH analyzer regulated the amount of neutralization solution containing 46 percent potassium hydroxide that was fed to the tank to maintain a pH of 12.5.(C121A, P106A, P113A)

Neutralized acid waste was piped to Tanks D-824 A and B for eventual treatment by the sludge solidification process.[P106A, P113A] The acid neutralization process is shown in Figure 20-2.[P052A]

20.1.4 Sludge Solidification

Liquid wastes treated by the acid neutralization, radioactive decontamination, and evaporation processes were transferred to the sludge solidification process. The waste streams that were treated in the sludge solidification process are described in Table 20-3.[P052A, P106A]

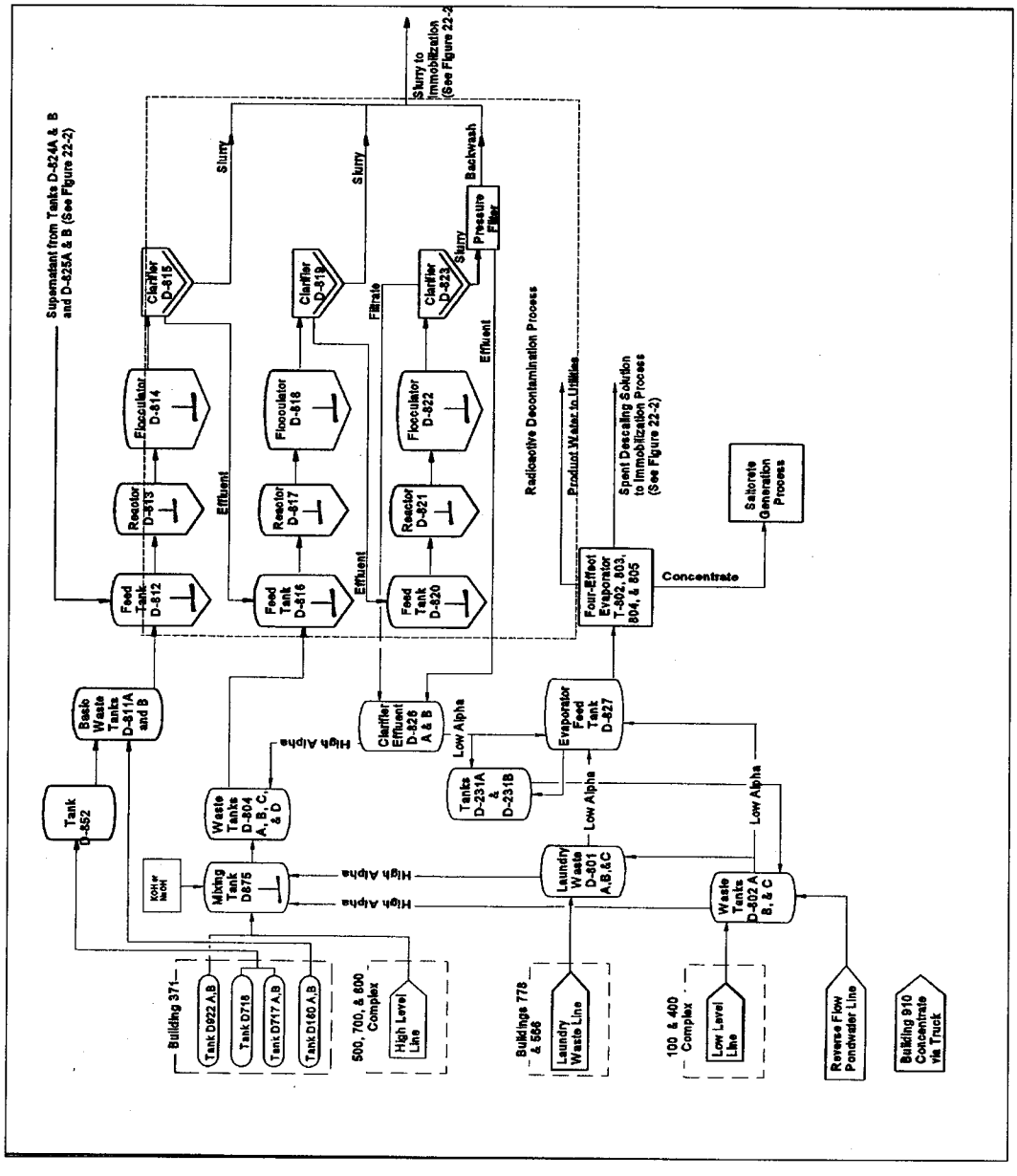

Figure 20-1. Building 374 radioactive decontamination and evaporation processes.

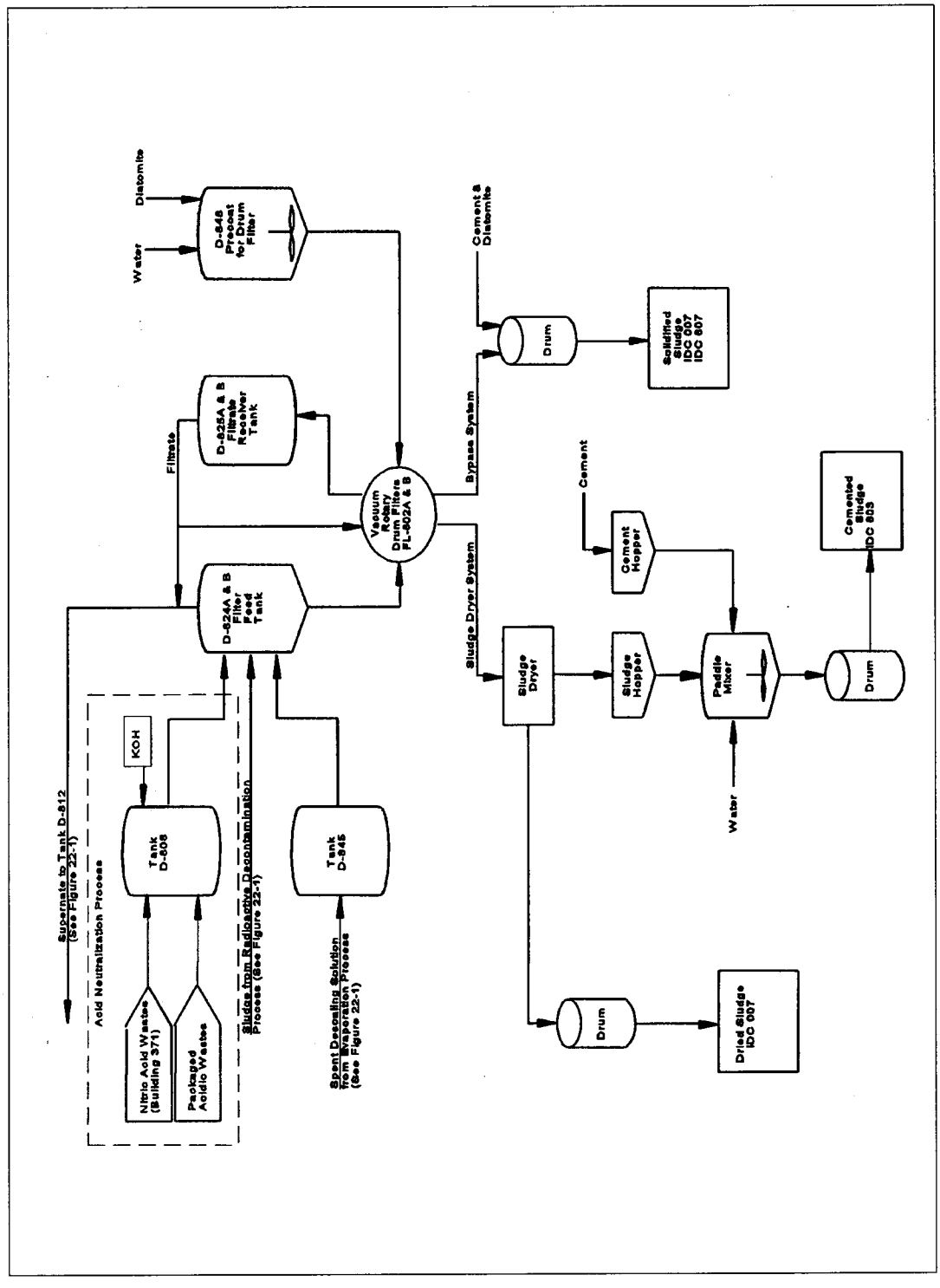

Figure 20-2. Building 374 acid neutralization and sludge immobilization processes.

Table 20-3. Waste streams treated in the sludge solidification process.

Waste Streams	Source Buildings	Contaminants
Tank D-808: Packaged Acid Wastes and Building 371 Nitric Acid Wastes	Buildings 123, 371, 444, 460, 559, 774, 865, 881, and 883	Acid Wastes
Tanks D-815, D-819, D-823: Radioactive Decontamination Process Effluent	Buildings 371 and 559, and 700 and 800 Areas	Acids, bases, arsenic, barium, beryllium, cadmium, chromium, lead, mercury, selenium, silver, Trim Sol,(P130A) Oakite Cleaner,(P091A) Ox Out 536,(P129A) acetone, ethyl alcohol, hexane, methanol, methyl ethyl ketone, methylene chloride, eutectic salts, photo developer,(P144A, P146A, P150A) and photo stop bath
Tank D-845: Evaporation Process Descaling Solution (nitric and phosphoric acid)	Buildings 122, 123, 443, 444, 447, 460, 559, 561, 566, 700 and 800 Areas, and Solar Ponds	Radioactive decontamination process effluent contaminants, 1,1,2-trichloro-1,2,2-trifluoroethane, toluene, solar pond water constituents, demineralization salts, water softeners, chemical indicators, penetrant oils, isopropanol, ethylene glycol, Mariko,(P128A) diamond paste, spent emulsifier,(P149A) spent developer(P143A, P145A, P147A, P148A)

The slurry from radioactive decontamination, spent descaling solution from the evaporator, and wastes from acid neutralization were fed into the filter feed tanks, D-824 A and B. Supernatant from the filter feed tanks was decanted to the radioactive decontamination process. The slurry from the feed tanks was pumped to the radioactively contaminated solids on the surface of the filter media. An advancing blade continuously removed rotary drum vacuum filter. The filter drum was coated with a mixture of diatomite and water or the filtrate. The slurry was fed into the filter pan. The filtrate was drawn through the pre-coat by a vacuum process, leaving the radioactively contaminated solids on the surface of the filter media. An advancing blade continuously removed the sludge and a thin layer of pre-coat. The filtrate from the rotary drum filter was transferred back to the radioactive decontamination process.(P047A, P106A, P113A)

The sludge from the rotary drum filter was immobilized using either the sludge dryer system or the bypass system. In the sludge dryer system, the sludge from the vacuum filters was fed to the dryer feed hopper then conveyed through the dryer in heated flights. The dried sludge was transferred directly into a 55-gallon drum. The resulting waste was assigned IDC 007 and consisted of dispersible fines.(P052A, P106A)

The process was modified in October 1982 to bypass the dryer. The bypass system used a series of two conveyor belts to transfer the moist sludge exiting the vacuum filter directly into a 55-gallon drum. Before 1986, cement was placed into the drum in layers with the sludge and tamped down during the metering process. This waste was also assigned IDC 007. After April 1986, diatomite and cement in a one-to-one ratio were metered into the drum with the sludge.(P013A, P015A, P016A) IDC 007 was discontinued in 1987 and replaced by IDC 807a.(P052A) The process that generated IDC 807a was the same as IDC 007.(P052A, P106A)

The sludge drier resumed operation in 1985. The sludge from the vacuum filter was dried in the same manner as the sludge generated prior to October 1982. However, the dried sludge was cemented in the DCP. The dried sludge overflowed directly into the DCP sludge hopper, and cement and water were mixed in using a paddle mixer. The sludge, cement, and water mixture was deposited into a 55-gallon drum and allowed to solidify.(P047A, P052A, P106A) DCP sludge was assigned IDC 803. Due to mechanical problems, the DCP was only in operation for about a year.(P052A)

20.2 Waste Packaging

20.2.1 Drums

Depending on the type of sludge and waste packaging requirements at the time, several combinations of bags and liners were used to prepare 55-gallon drums for shipment. A 90-mil rigid polyethylene liner was placed in the empty drum. Either a polyethylene drum bag or a round-bottom polyethylene drum bag was placed inside the rigid liner. A PVC O-ring bag was placed inside the polyethylene liner.(P012A, P013A, P016A, P022A, P026A, P047A)

Sludge generated using the sludge dryer system (IDC 007) was placed directly into lined 55-gallon drums.(P052A) Until 1986, sludge generated using the bypass system (IDC 007) was placed into a drum and mixed with cement. The resulting mixture of sludge and cement was tamped down during the metering process. Free liquids have been identified in many of the bypass sludge drums generated during this time period.(P013A, P015A, P016A)

For bypass sludge generated after April 1986 (IDC 007/807), one pound of diatomite was placed in the bottom of the rigid liner and another pound inside the polyethylene drum bag. The PVC O-ring bag was placed inside the polyethylene drum bag, and the excess top of the bag was folded down over the outside of the drum. The bag was doubled back up to form a tuck, and two pounds of diatomite were evenly distributed into the tucked portion of the O-ring bag. Two pounds of diatomite were also placed in the bottom of the O-ring bag. Diatomite and Portland cement were metered into the lined drum with the moist sludge. The cement and diatomite mixture was determined to be a better absorbent, and no free liquids or condensation have been found in the drums generated after April 1986.(P016A) A seven-to-one ratio of sludge to the cement and diatomite mixture was used.(C013A, C015A) As the drum was filled, the waste was periodically tamped down using a tamping tool. The diatomite in the tucked portion of the O-ring bag capped off the top of the sludge when the bag was twisted and taped closed.(P047A, P052A)

For IDC 803, one liter of Oil-Dri® was placed in the bottom of the O-ring bag. The sludge, cement, and water mixture was placed into the O-ring bag, and the O-ring bag was twisted and taped closed. One liter of Oil-Dri® was placed on top of the O-ring bag inside the polyethylene drum bag.(P047A) During RTR examinations of containers of other RF IDCs, quantities of absorbent were identified that varied significantly from expected quantities, or absorbent was identified outside of expected timeframes. In addition, some containers contained an absorbent other than that expected or contained no absorbent at all.

In 2002, the INL began a program to recover drums by removing excess residual liquids through absorption. Candidate drums were processed to add Aquaset® or vermiculite to absorb excess liquids. Sufficient Aquaset® or vermiculite was added to each candidate drum to reduce the amount of residual liquid to less than one percent of the container volume.(P238A)

Once a drum was full, the drum bags were twisted and taped closed, and the waste was allowed to cure. The rigid liner was closed with a plastic lid, the drum lid was secured with a bolted ring, and a tamper indicating device was attached to the drum.(P001A, P052A) Waste management practices for RF indicate twist and tape method for bag closure; however, a stub bag that is a heat-sealed filtered bag may be found in some containers that were visually examined at ANL-W as part of a previous VE program. RTR/VE also identified a filtered bag in a RF drum that was not visually examined by ANL-W. In addition, RTR/VE has identified twisted and tied or fold and tape as the method of bag closure.(P445A)

During characterization for the 3,100 m^3 Project it was observed that several combinations of drum bags, poly bags, and O-ring bags were used to package solidified aqueous waste. Any combination of these plastic bags, provided that five layers of confinement were not exceeded, did not impact acceptability of the drum. However, no more than three of these layers may be inner bags. Drums that exceeded TRUPACT-allowed containment layers were flagged for treatment in the TRIPS.(P238A)

20.2.2 Boxes

The AMWTP container inventory does not include any first/second stage sludge waste that was packaged in boxes. Debris wastes were the only waste packaged in boxes for shipment to the INL.(C289A, P024A)

20.3 Waste Characterization

Building 374 solidified aqueous wastes were characterized based on knowledge of the material, knowledge of the processes generating the waste, RTR review of the waste, VE, waste analysis, and headspace gas analysis. These wastes are at least 50 percent (by volume) inorganic solids and are classified as homogeneous waste.(P141A) Hazardous chemical constituents applicable to the Building 374 solidified aqueous waste group are presented by IDC in Table 20-4.(P218A, P220A) PCBs are not expected to be found in concentrations greater than 50 parts per million within this waste stream.(P393A)

Table 20-4. Potential hazardous chemical constituents of Building 374 solidified aqueous waste.(P420A)

IDC	Chemical Constituents(C245A, P016A, P052A, P368A)
007	1,1,1-trichloroethane, 1,1,2-trichloro-1,2,2-trifluoroethane, benzene, carbon tetrachloride, cadmium, chromium, cyanide cleaning bath solutions, cyanide plating bath solutions, electroplating sludges, hexachlorobenzene, lead, mercury, methyl ethyl ketone, methylene chloride, silver, selenium, tetrachloroethylene, toluene, trichloroethylene

IDC	Chemical Constituents[C245A, P016A, P052A, P368A]
803	1,1,1-trichloroethane, 1,1,2-trichloro-1,2,2-trifluoroethane, benzene, carbon tetrachloride, cadmium, chromium, cyanide cleaning bath solutions, cyanide plating bath solutions, electroplating sludges, hexachlorobenzene, lead, mercury, methyl ethyl ketone, methylene chloride, silver, selenium, tetrachloroethylene, toluene, trichloroethylene
807a	1,1,1-trichloroethane, 1,1,2-trichloro-1,2,2-trifluoroethane, benzene, carbon tetrachloride, cadmium, chromium, cyanide cleaning bath solutions, cyanide plating bath solutions, electroplating sludges, hexachlorobenzene, lead, mercury, methyl ethyl ketone, methylene chloride, silver, selenium, tetrachloroethylene, toluene, trichloroethylene

20.3.1 Radionuclides

The radionuclides potentially contained in the solidified aqueous waste – Building 374, and radioassay interferences, are described in the following sections. Information about radionuclides common to all RF wastes is presented in Section 3.0 of this document.

- The radionuclides of concern for IDCs 007, 803, and 807 are ^{238}Pu, ^{239}Pu, ^{240}Pu, ^{242}Pu, ^{233}U, ^{234}U, ^{238}U, and ^{241}Am.
- The two most prevalent radionuclides expected in the solidified aqueous waste – Building 374 waste containers are ^{239}Pu and ^{240}Pu.
- The remaining WIPP-tracked radionuclides, ^{137}Cs and ^{90}Sr, are not expected to be present in measurable quantities.

Aqueous waste treatment operations in Building 374 receive wastes from throughout plant site, including processes that generated low-level and non-radioactive liquid wastes. For this reason, wastes generated during treatment operations may contain any of the radionuclides used at the plant.

Radioassay interferences may include polypropylene from Ful-Flo filters, cadmium or chromium from HEPA filter frames, aluminum foil used as a spacer between the folds of the filter media, and Nomex, which is an aromatic polyamide fiber used in HEPA filters at five to seven weight percent.[P035A, P052A]

21.0 SOLIDIFIED AQUEOUS WASTE—BUILDING 774

This waste group consists of aqueous sludge generated by liquid waste treatment operations in Building 774 at RF. Aqueous wastes from numerous buildings and processes at the plant were received in Building 774 where they were treated to remove radioactive and chemical contaminants, and converted to a solid for disposal. A wet sludge containing the contaminants was filtered, followed by the addition of cement or diatomite.

Containers of this waste were characterized during the 3,100 m^3 Project and shipped to WIPP under a CBFO-approved WSPF, INW216.001.(P217A, P219A, P226A) Historic IDC descriptions and dates of generation for this waste in the AMWTP inventory are presented by IDC in Table 21-1.(P090A, P367A, P368A, P370A, U059A, U069A, U092, U128A)

Table 21-1. Building 774 solidified aqueous waste in the AMWTP inventory.

IDC	Title	Dates of Generation[e]
001[a]	First Stage Sludge(C063A) First Stage Sludge (prefix 0741)(P024A) First Stage Sludge–Bldg 774(C063A) Combined Sludge (prefix 7412)(P024A) First and Second Stage Sludge(P014A)	June 1971–August 1986[b, c]
002[d]	Second Stage Sludge(C063A) Second Stage Sludge (prefix 0742)(P024A)	January 1971–July 1985[d]
800	First Stage Sludge – Cemented "7412-series" Sludge(P004A) Solidified Sludge–Bldg 774(C031A)	December 1985–September 1988
741[a]	Pits 11 & 12 First Stage Sludge	June 1968–September 1972
742[d]	Pits 11 & 12 Second Stage Sludge	June 1968–September 1972

a. Prior to 1971, this waste was not identified by an IDC; therefore, AMWTP has assigned IDC 741 based on the drum prefix assigned by RF for first stage sludge generated in Building 774.

b. Does not include containers with a prefix of RD95 and pack dates in May 1995.

c. Dates of generation do not include waste retrieved from Pits 11 and 12 (i.e., wastes identified by the ID numbers 741 and 742).

d. Prior to 1971, this waste was not identified by an IDC; therefore, AMWTP has assigned IDC 742 based on the drum prefix assigned by RF for second stage sludge generated in Building 774.

e. Dates of generation are based on available shipping papers and may not reflect the actual inventory at INL due to incomplete records for waste received prior to 1973.

Item Description Code 001—First Stage Sludge: This waste consists of immobilized materials generated from first stage treatment operations in Building 774. Aqueous liquids coming into the process originated from Building 771 recovery operations. The liquids were made basic with sodium hydroxide to precipitate iron, magnesium, etc., which also carried down the relatively small amount of precipitate of plutonium and americium hydrated oxides. The precipitate was filtered to produce a sludge (IDC 001), which was placed in a drum with Portland cement. Beginning in 1979, sludge waste from second stage treatment was combined with first stage sludge. The combined sludges were also assigned IDC 001. The assignment of IDC 001 was discontinued in 1986 when the immobilization process changed and these sludge wastes were assigned IDC 800.(P004A, P015A, P016A, P052A, P113A)

Item Description Code 741—Pits 11 & 12 First Stage Sludge: This waste consists of aqueous sludge generated from the same process as IDC 001 that were shipped to INL prior to October 1972 and placed into Pits 11 and 12. The waste was subsequently retrieved from the Pits and placed into the TSA-RE prior to 1979. IDC 741 was assigned by AMWTP because the majority of the waste was generated prior to the use of IDCs at RF. (C618A)

Item Description Code 002—Second Stage Sludge: This waste consists of immobilized materials generated from second stage treatment operations in Building 774. The aqueous liquids that were treated originated from first stage treatment and from numerous buildings on plant site. The liquids were treated in the same manner as the liquids from the first stage, and the resulting sludge (IDC 002) was placed into a drum with Portland cement. Second stage sludge generated prior to 1973 may contain miscellaneous debris.(P004A, P024A, P042A, P052A, P109A, P124A)

Item Description Code 742—Pits 11 & 12 Second Stage Sludge: This waste consists of aqueous sludge generated from the same process as IDC 002 that were shipped to INL prior to October 1972 and placed into Pits 11 and 12. The waste was subsequently retrieved from the pits and placed into the TSA-RE prior to 1979. IDC 742 was assigned by AMWTP because the majority of the waste was generated prior to the use of IDCs at RF. (C618A)

Item Description Code 800—First Stage Sludge – Cemented: The process that produced solidified sludge from Building 774 (IDC 800) was very similar to IDC 001. The difference between the two IDCs was the immobilization process. For IDC 800, the sludge was co-fed into a drum with a diatomite and Portland cement mixture that formed a solid monolith after curing.(P001A, P016A, P052A, P109A)

Typical waste material parameters for solidified aqueous waste containers, including typical packaging materials, are presented in Table 21-2.(P226A, P402A) RF waste management and inspection protocol at RF allowed containers of waste to contain up to 10 percent of IDC wastes other than that assigned to the container.(P016A) Examples of these atypical items identified in IDCs 001, 002, and 800 waste containers include free (inorganic) liquid, miscellaneous metal debris, miscellaneous cellulosics (e.g., filters, tape roll), lead-containing items (e.g., leaded rubber gloves and aprons), rubber debris including rubber gloves, filters (metal alloy and cellulosic), glass debris, and miscellaneous plastics such as plastic tubing and polyethylene waste.(P226A, P402A) Other atypical waste items that may be in IDC 002 waste containers generated up until 1973 include electric motors, bottles containing residual liquid chemical wastes and mercury, and mercury and lithium batteries.

Table 21-2. Typical waste material parameters for solidified aqueous waste containers.

Typical Waste Material Parameter	Examples
Steel (packaging materials)	55-gallon drum
Plastics (packaging materials)	90-mil drum liner, O-ring bag, drum bag
Other Inorganic Materials[a]	Portland cement, vermiculite, Oil-Dri®, Aquaset®
Other Metals	Items such as lead sheets or lead tape
Inorganic Matrix	First, second, or cemented first stage sludge

Radioactive sources were periodically disposed of in containers of second stage sludge (IDC 002) through 1979. Examples of these sources include unidentified sources as well as ^{137}Cs, ^{226}Ra, ^{241}Am, ^{243}Am, ^{22}Na, ^{57}Co, ^{60}Co, ^{236}Pu, ^{238}Pu, ^{239}Pu, ^{233}U, ^{75}Se, Pu/Be neutron, EU, registry, and Pu-alpha sources. Higher radiation-strength sources were usually contained in lead pigs and the pigs were then placed in the center of the sludge drum.(P024A, U043A, U119A)

21.1 Waste Generation

Rocky Flats treated both liquid and solid process wastes. Liquid waste treatment operations had relatively few process changes over the years. When Building 774 was built in 1952, its primary purpose was to treat radioactive aqueous waste from Building 771. Later, aqueous wastes from numerous buildings on plant site were treated in Building 774. Aqueous treatment operations included neutralization, precipitation, filtration, flocculation, clarification, immobilization, and evaporation.(P052A, P053A, P113A) The evaporation process did not generate aqueous sludge and is not discussed further in this document. A flow diagram of the Building 774 aqueous waste treatment system, except evaporation, is shown in Figure 21-1.(P052A, P077A)

21.1.1 First Stage Treatment

Most aqueous wastes from plutonium recovery operations in Building 771 entered the first stage of the Building 774 liquid waste processing facility by vacuum transfer through the process waste system. The most common waste streams that entered first stage treatment were:(P061A, P113A, P124A)

- Plutonium ion exchange column effluent
- Part V waste solutions (nitric, sulfuric, and hydrofluoric acids)
- Americium ion exchange column effluent
- Nitric acid distillate from feed evaporator
- Thiocyanate waste solution
- Water distillate from peroxide precipitation filtrate evaporator
- Caustic scrubber solution

- Steam condensate.

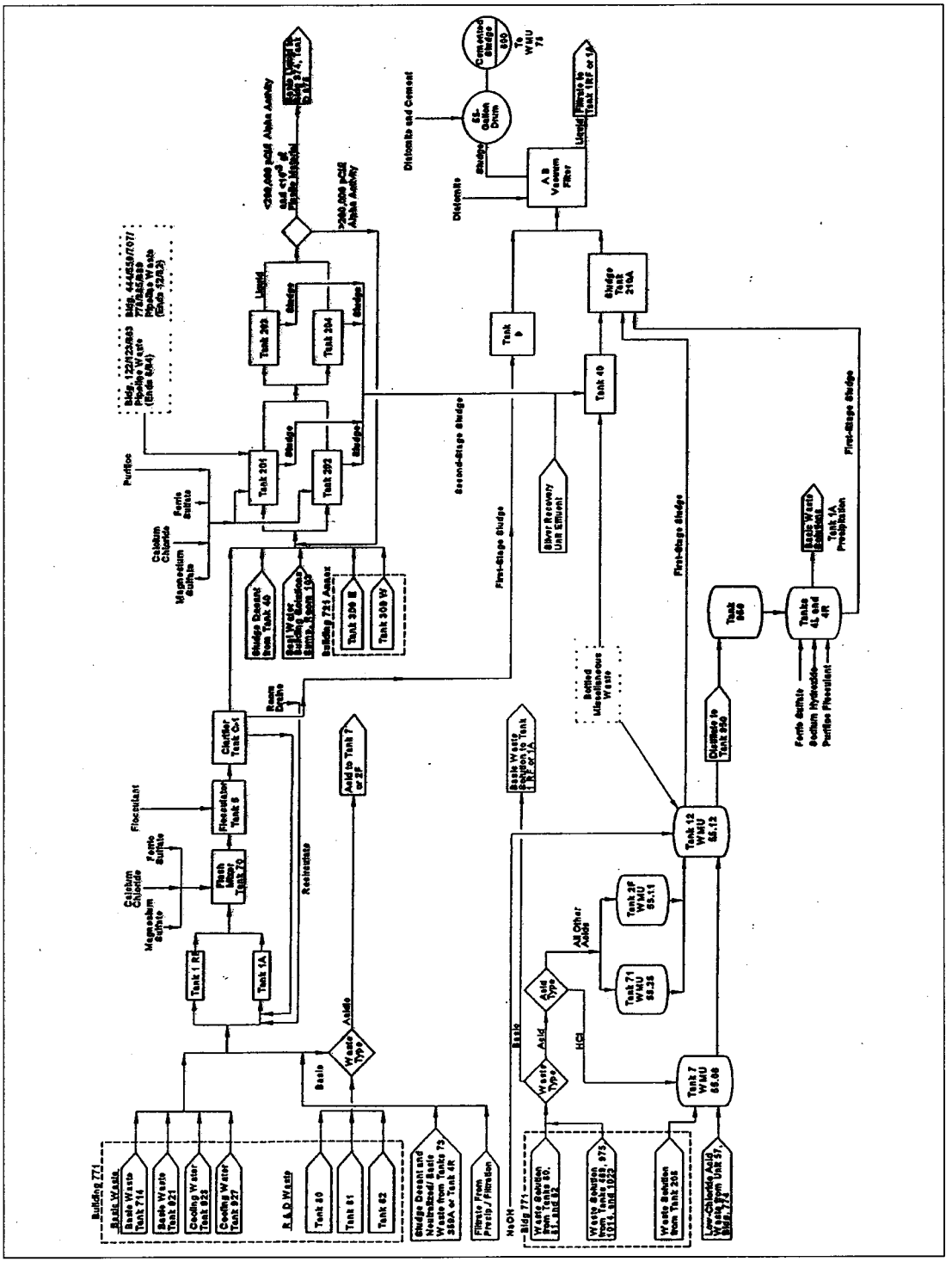

Figure 21-1. Building 774 aqueous waste treatment process.

There were three first stage treatment processes in Building 774 for treating aqueous wastes that did not contain complexing agents. Complexing agents were handled separately and were not mixed into these aqueous waste streams (see Section 22.0) These initial treatment processes were for: 1) acids with large quantities of cations in solution, 2) acids or bases with small quantities of cations or solids, and 3) basic or neutral solutions that were relatively free of solids. Treatment techniques consisted of neutralization, precipitation, flocculation, and clarification. Sodium hydroxide, ferric sulfate, calcium chloride, and a flocculating agent (Purifloc A23)[P065A] were used in these treatment processes. The high nitrate liquid from the clarifier tank was used as feed for second stage treatment.[P113A] Treatment of the slurry, which resulted from each of these initial treatment processes, is described in Section 21.1.3.

The following compounds were used during recovery operations in Building 771 and may be present in aqueous sludges from first stage treatment:[P061A, P402A, U047A]

- Nitric acid
- Aluminum nitrate
- Calcium fluoride
- Potassium hydroxide
- Ferrous sulfamate
- Sulfuric acid
- Hydrogen peroxide
- Calcium
- Magnesium oxide
- Magnesium
- Sodium peroxide
- Potassium iodate
- Hydrogen fluoride
- Sodium nitrate
- Hydrochloric acid
- Hydrofluoric acid
- Sodium hypochlorite
- Potassium fluoride

21.1.2 Second Stage Treatment

Second stage treatment handled liquids that had been processed through first stage treatment, decanted liquids from Tank 40 (slurry holding tank), and low-level or non-radioactive aqueous process wastes from numerous buildings on plant site. The building designations for the point of generation and the types of wastes that were transferred to second stage treatment (by truck or the process waste system) are provided in Table 21-3.

Most of the wastes transferred to second stage treatment by the process waste system were only accepted until August 1984 when the precipitation process in Building 374 went on-line. After that time, only the wastes from Buildings 771 and 774 were transferred to Building 774 second stage treatment through the process waste system. After August 1984, wastes from the remaining buildings were sent to Building 774 by tanker.[P052A, P061A, P109A, P126A, U043A]

The second stage process included two separate radioactive decontamination systems: (1) a batch precipitation system used to remove radioactive materials from wastes in which both the radioactive and chemical contaminants exceeded the standards, and (2) a continuous precipitation system used to remove radioactive materials from wastes meeting the standards for chemical, but not radioactive contaminants. Both processes used the ferric hydroxide carrier-precipitation method of decontamination. The treated liquids from the batch process were stored

in asphalt-lined ponds or sent to Building 374 for further treatment. Liquids from the continuous process were stored in unlined earthen ponds.(P113A)

Table 21-3. Waste streams feeding second stage treatment.

Source Buildings	Materials
111	Process liquid waste
122	Medical decontamination washdown
123	Acidic solutions, process wastewater, and standards and sample waste
331	Filter sludge and antifreeze solution
334	Ammonium persulfate, copper sulfate, etchants, and cleaners
371	Ammonia hydroxide, potassium hydroxide, and process wastewater
443	Lithium chloride solution and water treatment additives
444	Process wastewater (acidic), waste plating acid
447	Process wastewater
460	Process wastewater (acidic)
551	35 percent hydrogen peroxide, high tin content
553	Sulfuric acid, baking soda, calcium chloride
559	Standards, caustic scrubber solution, acid wastes, and process wastewater
690	Acid solutions
705	Ox-Out (water, ammonium bifluoride, and nitric acid)
707	Calcium fluoride solution and acid solutions
750	Hydrochloric acid and trisodium phosphate
771	Process wastewater (residual chemicals, blowdown water, decontamination water)
774	Floor wash down and silver recovery effluent
776	Ammonia hydroxide, ethanol, hexane, acid solutions, and process wastewater
778	Laundry wastewater, Suma cleaner, and rinse water/battery acid
779	Acidic and basic solutions and process wastewater
865	Acid solutions, scrubber effluent, polishing solution, and process wastewater
881	Acid solutions, standards, samples, ammonium chloride, and process wastewater
883	Acid solutions, Ox-Out, and process wastewater
886	Ferric chloride, detergents, and process waste water
889	Equipment decontamination water
991	Acidic and basic solutions and water samples

21.1.3 Sludge Treatment

Slurry from first stage treatment was drawn through a diatomite filter media using a vacuum inside a rotating filter drum. The filter media and trapped solids were continually scraped off the drum filter and fed into a 55-gallon drum.(P001A) Portland cement was added to the bottom of the drum prior to placing the sludge in the drum. Portland cement may also have been added on top of the sludge. The sludge was assigned IDC 001.(P016A) Prior to 1979, the slurry from the second stage was kept separate from the first stage slurry. Second stage sludge was assigned IDC 002.(P052A)

Beginning in 1979, slurry from first and second stage treatment was combined prior to filtration. The sludge was still assigned IDC 001.(P024A) In 1986, the immobilization process changed and IDC 001 was discontinued. The process of pulling the combined slurry through diatomite filter media remained the same.(P001A) As the sludge was scraped off the drum filter, it was co-fed into a drum with a diatomite and Portland cement mixture which formed a solid monolith after curing. This waste was assigned IDC 800 and was generated until March 1991.(P016A, P052A) Containers of IDC 800 in the AMWTP inventory were generated through September 1988, as shown in Table 21-1.

21.2 Waste Packaging

21.2.1 Drums

Depending on the type of sludge (first stage, second stage, or combined) and waste packaging requirements at the time, several types and combinations of bags and liners were used to prepare 55-gallon drums for shipment.

From 1970 to 1972, three to five pounds of Portland cement was placed in the bottom of an unlined drum. A polyethylene drum bag was used to line the drum, and another 3 to 5 pounds of cement was placed in the bottom of the liner. For first stage sludge, a PVC O-ring bag was put in the drum and attached to the glovebox. Approximately 30 pounds of cement were placed in the bottom of the O-ring bag. First stage sludge was then put in the drum followed by approximately five pounds of cement on top of the O-ring bag inside the polyethylene drum liner. The liner was then twisted and taped closed.(P024A)

For second stage sludge, a plastic bag was put in the drum and 3 to 5 pounds of cement was placed in the bottom of the bag. Second stage sludge was put in the drum in several layers with three to five pounds of cement between each layer. Another 3 to 5 pounds of cement was placed on the last sludge layer before the bag was twisted and taped closed. Approximately five pounds of cement was then placed on the top of the plastic bag inside the polyethylene liner and the liner was twisted and taped closed.(P024A)

Use of the 90–mil rigid polyethylene liners began in 1972. From 1972 to 1979, the rigid liner was placed in the empty drum with Portland cement being placed in the bottom of the rigid liner. The remaining packaging configuration, including cement layering, was the same as described above for pre-1972 waste. However, in some cases, second stage sludge was contained in a single round-bottom polyethylene liner within the rigid liner.(P012A, P013A, P015A, P022A, P024A)

In some instances, a round-bottom liner was used in lieu of a rigid liner for first stage sludge.(P402A)

Beginning in 1979, first and second stage sludges were combined prior to filtration and subsequent packaging.(P024A) As before, the drum was lined with a 90–mil rigid liner with Portland cement placed in the bottom of the liner. The rest of the packaging configuration was the same as it had been for first stage sludge since 1970. The one exception is that, beginning in 1983, an additional three to five pound layer of cement may have been placed on top of the sludge inside the O-ring bag before it was closed. Although not required until 1989, a polyethylene round bottom drum liner may have been placed between the rigid liner and O-ring bag as early as 1973.(P012A, P013A, P015A, P016A, P022A)

After drums were filled and inspected, 1 to 2 quarts of Oil-Dri® were placed on the top of the outer, sealed polyethylene drum bag. This procedure changed in 1982 when vermiculite was used to fill the space between the outer, sealed polyethylene drum bag and the top of the rigid liner.(P024A, P043A) The drum lids were then installed and secured with a bolted ring, and tamper-indicating devices were attached to the drums. For IDC 800, the drum was closed after the sludge, diatomite, and cement mixture was allowed to cure.(P001A, P043A)

Historical AK indicates that first stage sludge drums may have been lead-lined to reduce radiation levels. Increased radiation levels are usually associated with high americium concentrations in the sludge.(P024A) Lead lining may be in the form of lead sheeting used to line the inside of the drum or, after 1972, lead tape may have been used to wrap the outside of the rigid liner. RTR characterization indicates that lead shielding was present in some drums.(P226A)

During RTR examinations of sludge containers, quantities of absorbent were identified that varied significantly from expected quantities, or absorbent was identified outside of expected timeframes. In addition, some containers contained an absorbent other than that expected or contained no absorbent at all. These absorbent configurations are atypical but do not impact WMC or HWN assignments. In 2002, the INL began a program to recover drums by removing excess residual liquids through absorption. Candidate drums were processed to add Aquaset® or vermiculite to absorb excess liquids. Sufficient Aquaset® or vermiculite was added to each candidate drum to reduce the amount of residual liquid to less than one percent of the container volume.(P226A, P402A)

Waste management practices for RF indicate twist and tape method for bag closure; however, a stub bag that is a heat-sealed filtered bag may be found in some containers that were visually examined at ANL-W as part of a previous VE program. RTR/VE also identified a filtered bag in a RF drum that was not visually examined by ANL-W. In addition, RTR/VE has identified twisted and tied or fold and tape as the method of bag closure. The presence of the heat-sealed filtered bag, twist and tied (with zip-tie or wire) bag, or fold and taped bag as alternate closure methods for twist and tape does not affect the IDC, WMC, or HWN assignment of the container.(P402A, P445A)

Several combinations of round bottom drum liner bags, O–ring bags, and polyethylene bags have been identified by characterization RTR and VE, including drums with no layers of containment (i.e., no drum bags). In addition, some drums packaged in 1972 and later may not include a rigid 90–mil liner. These configurations are atypical but do not impact WMC or HWN assignments. Any combination of plastic bagging does not impact acceptability of the drum for shipping, provided that five layers of containment (no more than three of which may be inner bags) are not exceeded.(P402A)

21.2.2 Boxes

The AMWTP container inventory does not include any first/second stage sludge waste that is packaged in boxes.(C289A, P024A)

21.3 Waste Characterization

Building 774 solidified aqueous wastes are characterized based on knowledge of the material, knowledge of the processes generating the waste, RTR/VE, waste analysis, and headspace gas analysis. These wastes are at least 50 percent by volume inorganic sludges and are classified as homogeneous waste.(P141A) Hazardous chemical constituents applicable to the Building 774 solidified aqueous waste are presented by IDC in Table 21-4. PCBs are not expected to be found in concentrations greater than 50 parts per million within this waste stream.(P393A)

Table 21-4. Potential hazardous chemical constituents of Building 774 solidified aqueous waste.

IDC	Chemical Constituents (C245A, P015A, P016A, P024A, P052A, P319A, P368A)
001 741	1,1,1-trichloroethane, 1,1,2-trichloro-1,2,2-trifluoroethane, 1,1,2-trichloroethane, arsenic, barium, carbon tetrachloride, cadmium, chlorobenzene, chloroform, chromium, cyanide cleaning bath solutions, cyanide plating bath solutions, electroplating sludges, ethyl benzene, lead, mercury, methylene chloride, silver, selenium, tetrachloroethylene, toluene, trichloroethylene
002 742	1,1,1-trichloroethane, 1,1,2-trichloro-1,2,2-trifluoroethane, 1,1,2-trichloroethane, arsenic, barium, carbon tetrachloride, cadmium, chlorobenzene, chloroform, chromium, cyanide cleaning bath solutions, cyanide plating bath solutions, electroplating sludges, ethyl benzene, lead, mercury, methylene chloride, silver, selenium, tetrachloroethylene, toluene, trichloroethylene
800	1,1,1-trichloroethane, 1,1,2-trichloro-1,2,2-trifluoroethane, 1,1,2-trichloroethane, arsenic, barium, carbon tetrachloride, cadmium, chlorobenzene, chloroform, chromium, cyanide cleaning bath solutions, cyanide plating bath solutions, electroplating sludges, ethyl benzene, lead, mercury, methylene chloride, silver, selenium, tetrachloroethylene, toluene, trichloroethylene

21.3.1 Radionuclides

The radionuclides potentially contained in the solidified aqueous waste – Building 774, and radioassay interferences, are described in the following sections. Information about radionuclides common to all RF wastes is presented in Section 3.0 of this document.

- The radionuclides of concern for IDCs 001, 002, and 800 are ^{238}Pu, ^{239}Pu, ^{240}Pu, ^{242}Pu, ^{233}U, ^{234}U, ^{238}U, and ^{241}Am.

- The two most prevalent radionuclides in waste stream BNINW216 can be any combination of ^{239}Pu, ^{235}U, and ^{238}U, depending on the relative mixture of WG Pu, EU, and DU in the waste.(P402A)

- The remaining WIPP-tracked radionuclides, ^{137}Cs and ^{90}Sr, are not expected to be present in measurable quantities; however, ^{137}Cs sealed sources were disposed of as waste in some IDC 002 containers.(U043A, U119A) Thus, these ^{137}Cs sources may also be expected in IDC 001 drums with a 7412 prefix and IDC 800 drums since these IDCs were derived by combining IDC 001 and IDC 002 drums.(D051A)

Aqueous waste treatment operations in Building 774 received wastes from throughout plant site, including processes that generated low-level and non-radioactive liquid wastes. For this reason, wastes generated during treatment operations may contain any of the radionuclides used at the plant.

Radioassay interferences may include polypropylene from Ful-Flo filters, cadmium or chromium from HEPA filter frames, aluminum foil used as a spacer between the folds of the filter media, and Nomex, which is an aromatic polyamide fiber used in HEPA filters at five to seven weight percent.(P035A, P052A)

Production and production support processes in Buildings 371, 559, 707, 771, 776, 777, and 779 generated wastes contaminated with WG Pu, ^{241}Am, and EU, which were treated in Building 774. Production and production support processes in Buildings 444, 447, 865, and 883 generated wastes contaminated with DU, which were treated in Building 774.(P053A, U053A) Other radionuclides may also be found in Building 774 wastes from R&D, analytical, and special order work.(P164A) Processing of most of the "special" radionuclides, such as ^{244}Cm, ^{232}Th, and ^{236}U, was performed until the early- to mid-1970s.(C154A, P164A, P189A, P194A) Neptunium-237 was processed until 1985 or 1986, and ^{233}U was handled until about 1982.(C154A, P164A, P198A, P200A)

The SRV in Building 776 conducted repackaging operations (container Prefixes 0019, 0025, and 0040).(C175A, C184A, P078A, U059A) The package date on these drums is the date in which the waste was repackaged. The waste was originally generated some time prior to this date; therefore, it is assumed that the repacked sludge containers could potentially contain any of the above radionuclides.

22.0 SOLIDIFIED LABORATORY WASTE

This waste group consists of solidified liquid wastes that were not compatible with the primary aqueous waste treatment system, such as complexing agents, strong acids, and strong bases. The liquids were neutralized and solidified in Building 774.(P012A) The liquid wastes, which were generated in numerous buildings on plant site, were treated to produce IDCs 004 and 802.(U043A)

Historic IDC descriptions and dates of generation for this waste in the AMWTP inventory are presented by IDC in Table 22-1.(P090A, P367A, P368A, P370A, U059A, U069A, U092, U128A)

Table 22-1. Solidified laboratory waste in the AMWTP inventory.

IDC	Title	Dates of Generation[c]
004[a]	Special Setups Special Setups–Building 774(P016A)	July 1971–November 1986[b]
802	Solidified Laboratory Waste Solidified Laboratory Waste–Building 774(P016A)	June 1986–April 1988
744[a]	Pits 11 & 12 Special Setups	June 1968-September 1972

a. Prior to 1971, this waste was not identified by an IDC; therefore, AMWTP has assigned IDC 744 based on the drum prefix assigned by RF for special setups generated in Building 774.

b. Dates of generation do not include waste retrieved from Pits 11 and 12 (i.e., wastes identified by the ID numbers 744).

c. Dates of generation are based on available shipping papers and may not reflect the actual inventory at INL due to incomplete records for waste received prior to 1973.

Item Description Code 004—Special Setups: This waste consists of liquids, primarily from laboratory operations throughout plant site that were neutralized and solidified in Building 774. A mixture of Portland cement and insulation cement was placed in a lined 55-gallon drum. The liquid waste was neutralized and then added to the cement mixture, which cured to form a solid monolith. Some drums may contain polyethylene bottles of solidified waste.(P024A)

Item Description Code 744—Pits 11 & 12 Special Setups: This waste consists of special setups generated from the same process as IDC 004 that were shipped to INL prior to October 1972 and placed into Pits 11 and 12. The waste was subsequently retrieved from the Pits and placed into the TSA-RE prior to 1979. IDC 744 was assigned by AMWTP because the majority of the waste was generated prior to the use of IDCs at RF.

Item Description Code 802—Solidified Laboratory Waste: The cementation process for IDC 802 was similar to IDC 004. IDC 802 replaced IDC 004 in approximately 1986.(U092A) The IDC was changed to designate containers of solidified laboratory waste that were certified for disposal.(C008A)

Potential waste material parameters for solidified laboratory waste containers, including typical packaging materials, are presented in Table 22-2.(P609A) RF waste management and inspection protocols allowed containers of wastes to contain up to 10 percent of an IDC other

than that assigned to the container.[P016A] Solidified laboratory waste is primarily composed of homogeneous solids, but may contain minor amounts of other debris waste. RTR and VE of other RF debris waste streams have identified debris items including combustibles (paper, rags, gloves, etc.), plastic (bottles, tubing bags, etc.), glass (bottles, Raschig rings, beakers, etc.), lead (glass, tape, gloves, scrap, etc.), metal (nuts, bolts, cans, welding rods, tools, wire, scrap, etc.), and other debris (concrete, light bulbs, etc.).

Table 22-2. Potential waste material parameters for solidified laboratory waste containers.

Potential Waste Material Parameters	Examples
Steel (packaging materials)	55–gallon drum
Plastics (packaging materials)	90–mil drum liner, O-ring bags, drum bags
Inorganic matrix	Solidified inorganic liquids
Other inorganic materials	Oil-Dri®, vermiculite

22.1 Waste Generation

Liquid wastes that were not compatible with the primary aqueous waste treatment system were solidified in Building 774. The liquid wastes included complexing agents, strong acids, and strong bases that were generated primarily from the analytical laboratories, R&D laboratories, and maintenance shops.[P016A, P024A] The liquid wastes originated in Buildings 122, 123, 126, 371, 444, 559, 705, 707, 750, 771, 777, 779, 865, 881, 883, 886, and 991.[C073A, C175A, P024A, P077A, P107A, P368A, P495A, U043A, U059A]

Liquid wastes generated in the analytical laboratories in Buildings 371, 559, and 771 were sent to Building 771 for recovery if they contained plutonium above the EDL.[P067A] Following recovery, the liquids were then transferred to Building 774, where they were immobilized in cement. Liquid wastes from the other buildings and processes were below the EDL and were also solidified in Building 774.[P016A, P024A]

The process flow diagram for the solidification of liquid waste as special setup waste is provided in the archived RF WSRIC Building 774 information.[P077A]

22.1.1 Neutralization and Solidification Process

Packaged waste received in plastic bottles was entered into the glovebox. The bottles containing acid waste were transferred into Tank T-7, the receiver, and neutralizer tank adjacent to the glovebox. After sodium hydroxide was added to Tank T-7, pH paper was used to ensure the acid waste had been neutralized. Liquid wastes that were basic when they were received were not neutralized prior to solidification.[P070A]

A mixture of approximately 250 to 300 pounds of Portland type I/II cement and 100 to 150 pounds of insulation cement were placed in a lined 55-gallon drum that was attached to the glovebox.[P073A] Approximately 80 to 100 liters of the basic waste or neutralized liquid waste was added to the cement mixture and placed on a drum roller to ensure mixing of the contents.[P024A,

P073A) The cement mixture in the drum reacted with the waste solution to form a solid monolith.(P024A, P070A, P073A, P496A)

Periodically, polyethylene bottles were filled with the cement mixture and sent to waste generators on plant site where small volumes of liquid waste would be added.(P024A)

22.1.2 Liquid Waste Generation

The bulk of the liquid waste was packaged in small containers (typically plastic bottles) or in drums at the point of origin and transferred to Building 774; however, some of the liquid waste was received by pipeline transfers from Building 771. A setup logbook was used in Building 774 to record the types and source of waste from which IDC 004 and 802 wastes originated. The date of treatment, generation location, waste description, and treatment process were entered in the log book.(U043A) All wastes with treatment entries indicated as "bottle box" or "setup in bottle box" were those treated by this process. There are numerous entries for less than 10 liters of organic waste treated in the bottle box system. With the exception of large volumes of organic waste (e.g., greater than one drum), if the entry was "setup" with no indicated treatment process, it was assumed to be included in IDCs 004 and 802. Large volumes of organic wastes were not compatible with the bottle box solidification system and would most likely have been treated in the solidified organic waste system. Section 3.0 provides more details about these processes.

A description of the liquid wastes treated by this process, including generation locations (i.e., buildings), is presented in Table 22-3.(U043A) Information in parentheses does not appear in the logbook but is provided as clarification.

Table 22-3. Liquid wastes included in IDCs 004 and 802.

Generation Building	Waste Description
122	^{239}Pu and ^{55}Fe (assumed to be sources)
123	Anion and cation resin, glass wool, hydrochloric acid, and nitric acid; lab waste; liquid bromine; ammonium chloride; ^{133}Ba (assumed to be a source); EU, ^{237}Np, ^{90}Sr, and tritium sources; small amount of liquid that apparently had been a standard
126	Nuclides (assumed to be sources)
371	dicesium hexachloroplutonate (DCHP), effluent waste, lab waste
444	Ox-out/5.5 percent nitric acid (Ox-out is a water solution of nitric acid and ammonium bifluoride);(P091A) phosphoric acid; chromic acid; sodium lignosulfonate; Versene (Versene is a trade name EDTA product).(P024A)
447	Contaminated Turco bath (Turco is a trade name for a series of cleaners with various combinations of acids, complexing agents, and surfactants)(P091A)
559	Five to fifteen percent phosphoric acid; basic lab waste; beryllium chloride salts; electroetch solution; inorganic waste; m-phenylenediamine; scrubber waste; tritium scintillation cocktail contains toluene; tritium analytical waste

Generation Building	Waste Description
705	Ox-out (Ox-out is a water solution of nitric acid and ammonium bifluoride)(P091A)
707	Coolant water; distilled water
750	Absorber – no contamination

Table 22-3. (continued).

Generation Building	Waste Description
771	Acid solution; acrylonitrile; americium oxalate filtrate; basic cyanide waste; basic lab waste; boilout solution; cadmium nitrate; caustic; chloride and SCN waste; citric solution—americium citrate solution; chloride-nitrate waste; chlorine waste hydrofluoric acid trapping solvent; cooling water; DU in nitric acid; distillate water and detergent; ethylene glycol; filter solution; floor sweepings (oxide waste); hydrochloric acid dissolutions; hydrofluoric acid fluoride solution; hydrofluoric, oxalic, and ascorbic acid with stannous chloride; magnesium, potassium, and sodium (assumed to be in solution, the waste volume is reported in liters); metallurgical lab waste; nitrate, borate, chromate, and oxalate; hydroxide filtrate; phosphoric acid, 2-ethoxyethanol, oxalic acid, ethylene glycol, water, and ethyl alcohol; potassium hydroxide; plutonium-curium sludge; slurried cement; SST (assumed to be stainless steel) capsules DU; tetraphosphoric acid; titanium tetrachloride; ^{233}U in oil; ^{233}U plating solution; ^{233}U filtrate solution; ^{238}U acid waste; solid cerium; wash solution; waste acid nickel plating; waste etching solution; waste solution; water from compactor; Metex solution (Metex is a trade name for a series of inorganic and organic acids or salts).(P119A)
777	Distilled water
779	75 percent sulfuric acid; americium solution; contaminated soil; cesium/sodium/potassium/sodium chloride salts; DU; etchant solution; tetraphosphoric acid; etching solution; perchloric acid; hydrochloric acid solution; LLW; metal X and B273 (no reference was found to identify the constituents of this material); nitric acid; oil; phosphoric acid and ethylene glycol; plutonium oxide and sodium hydroxide; propylene carbonate; waste solution; water etching solution
865	700 gram picric acid – reacted with sodium sulfide, sodium hydroxide, and ammonium sulfide
865	Aqueous cut-off wheel solution
881	Acid solution plutonium, americium, uranium; aqueous; chlorophenol; ECM (electrochemical milling) sludge; hot waste solution plutonium, neptunium, americium, thorium, uranium; lab waste solution high in tritium; liquid from vacuum trap; LLW neptunium, ^{235}U, plutonium, americium; nitrate and chloride salts; tributyl phosphate; tritiated water; tritium
883	Grinder coolant, machine coolant
886	Kepro developer (Kepro developer contains 1,1,1-trichloroethane)(P091A)

Generation Building	Waste Description
991	Ox-out containing beryllium[P091A]

22.2 Waste Packaging

22.2.1 Drums

Solidified laboratory waste was contained in an O-ring bag inside a prepared 55-gallon drum attached to the glovebox.[P015A, P021A] Approximately 10 to 15 pounds of Portland cement was added on top of the cemented laboratory waste before the O-ring bag was sealed. The solidified waste may also be contained in polyethylene bottles inside the lined 55-gallon drum.[P024A]

Depending on waste packaging requirements at the time, several combinations of bags and liners were used to prepare 55-gallon drums for shipment. From 1970 to 1972, waste drums were lined with a polyethylene drum bag. Three to five pounds of Portland cement was placed in the bottom of the drum and in the drum bag. Use of the 90-ml rigid polyethylene liner began in 1972.[P024A] The rigid liner was placed in each drum and lined with a polyethylene round bottom drum liner.[P016A, P024A, P063A, P064A] Three to 5 pounds of Portland cement was placed in the bottom of the rigid liner and in the round bottom liner. When a drum was full, the drum liners were twisted and taped closed, the lid was secured with a bolted ring, and a tamper-indicating device was attached to the drum.[P012A, P016A, P024A]

Waste management practices for RF indicate twist and tape method for bag closure; however, a stub bag that is a heat-sealed filtered bag may be found in some containers that were visually examined at ANL-W as part of a previous VE program. RTR/VE also identified a filtered bag in a RF drum that was not visually examined by ANL-W.

Various types of absorbents were used at RF. For the majority of the waste, after drums were inspected, one to two quarts of absorbent material (Oil-Dri®) was placed on the top of the outer, sealed polyethylene drum bag. This procedure changed in February 1982, when vermiculite was used to fill the space between the outer, sealed polyethylene drum bag and the top of the 90-mil rigid liner.

During RTR examinations of waste containers, quantities of absorbent were identified that varied significantly from expected quantities, or absorbent was identified outside of expected timeframes. In addition, some containers contained an absorbent other than that expected or contained no absorbent at all. Generally the quantity of vermiculite varied from three to twelve pounds according to the amount of waste contained in each drum.[P024A]

22.2.2 Boxes

AK information does not reflect that this waste was shipped to the INL in boxes.

22.3 Waste Characterization

Solidified laboratory waste was characterized based on knowledge of the material, knowledge of the processes generating the waste, RTR review of the waste, VE, surrogate waste analysis, and headspace gas analysis. This waste is at least 50 percent (by volume) inorganic solids and is classified as a homogeneous waste.(P141A) Potential hazardous chemical constituents applicable to BN 004 are presented by IDC in Table 22-4.(U092A, P609A) PCBs are not expected to be found in concentrations greater than 50 parts per million within this waste stream.(P393A)

Table 22-4. Potential hazardous chemical constituents of solidified laboratory waste.

IDC	Chemical Constituents (P015A, P368A)
004 744	1,1,1-trichloroethane, 1,1,2-trichloro-1,2,2-trifluoroethane, 1-butanol, carbon tetrachloride, cadmium, chromium, lead, methanol, silver, trichloroethylene, xylene
802	None

22.3.1 Radionuclides

The radionuclides potentially contained in the solidified aqueous waste, and radioassay interferences, are described in the following sections. Information about radionuclides common to all RF wastes is presented in Section 3.0 of this document.

- The primary radionuclides of concern for special setup waste are ^{238}Pu, ^{239}Pu, ^{240}Pu, ^{242}Pu, ^{233}U, ^{234}U, ^{238}U, and ^{241}Am.(C184A, P070A, P240A)
- The two most prevalent radionuclides anticipated in the special setup waste containers are ^{239}Pu and ^{240}Pu.
- The remaining WIPP-tracked radionuclides, ^{137}Cs and ^{90}Sr, as well as other radionuclides such as tritium, ^{243}Am, DU, EU, ^{233}U, ^{55}Fe, ^{237}Np, ^{133}Ba, ^{60}Co, ^{228Th}, and ^{244}Cm and ^{245}Cm, were introduced into the solidification process in liquids received or as sources from various buildings and are expected to be present in trace amounts.(P368A, U043A)

Radioassay interferences may include polypropylene from Ful-Flo filters, cadmium or chromium from HEPA filter frames, aluminum foil used as a spacer between the folds of the filter media, and Nomex, which is an aromatic polyamide fiber used in HEPA filters at five to seven weight percent.(P035A, P052A)

Aqueous waste treatment operations in Building 774 received wastes from throughout the plant site, including processes that generated low-level and non-radioactive liquid wastes. For this reason, wastes generated during treatment operations may contain any of the radionuclides used at the plant. The solidified laboratory wastes also contain other radionuclides that were undesirable in the regular aqueous waste treatment system.(P164A)

Processing of most of the special radionuclides, such as ^{244}Cm, ^{232}Th, and ^{236}U, was performed until the early- to mid-1970s.(C154, P164, P189, P194) Curium-244, ^{245}Cm, and ^{243}Am have been detected in trace amounts in RF waste and are expected to be present in all RF waste shipped to the INL.(U043A)

The SRV in Building 776 conducted repackaging operations (Prefixes 0019 and 0025).(C175A, C184A, P078A, U059A) The package date on these drums is the date when the waste was repackaged; therefore, the waste was originally generated some time before the package date. It is assumed that the repacked containers could potentially contain any of the above radionuclides. IDC 802 is not expected to contain ^{233}U, because ^{233}U was only handled until about 1982, and IDC 802 was not generated until about 1986. (P198A)

23.0 MISCELLANEOUS DEBRIS

This waste group consists of miscellaneous debris wastes generated during the production and recovery of plutonium, laboratory, treatment, maintenance, decommissioning, decontamination, and R&D activities associated with RF operations. The RF miscellaneous debris wastes were primarily generated from RF Buildings 371, 374, 559, 707, 771, 774, 776, 777, and 779.[P001A, P012A, P016A]

Historic IDC descriptions and dates of generation for the miscellaneous debris wastes in the AMWTP inventory are presented by IDC in Table 23-1.[P090A, P367A, P368A, P370A, U059A, U069A, U092, U128A] Other RF debris wastes were characterized separately in other sections of this report.

Item Description Code 020—Wood & Benelex: This waste consists of wood and benelex generated from the same processes as IDCs 464 and 970 but was the original IDC designator used at RF prior to June 1971.[C267A]

Item Description Code 080—Equipment: This waste consists of equipment generated from the same processes as IDCs 980 but was the original IDC designator used at RF prior to June 1971.[C267A]

Item Description Code 302—Benelex and Plexiglas: Benelex is dense, laminated, lignocellulose hardboard made from wood chips and particles. Benelex was usually coated with fire-retardant paint and sometimes had lead sheeting (one-eighth to one-quarter-inch thick) attached to it.[P012A, P024A] It was usually two inches thick, although occasionally two two-inch thick pieces were bolted together to increase shield thickness.[P052A] Plexiglas is a trade name for a transparent plastic material made from methyl methacrylate. Plexiglas glovebox windows were two to four inches thick and were cut to fit the glovebox window. In addition to Benelex and Plexiglas, leaded glass and limited amounts of surgical gloves, metal hinges on Benelex gloveport doors, pieces of angle iron attached to larger pieces of Benelex, and rubber gaskets from glovebox windows may be present.[P024A]

Item Description Code 33A—WETP Bin Program – Combustibles A: This waste consists of a mixture of waste with IDCs 335, 336, 337, and 339 (Filters, Absolute 8 × 8, paper and rags-moist, plastic, Teflon, PVC, leaded rubber gloves, and aprons).

Item Description Code 33B—WETP Bin Program – Combustibles B: This waste consist of a mixture of waste with IDCs 330, 337, and 339 (paper and rags-dry, plastic, Teflon, PVC, leaded rubber gloves, and aprons).

Item Description Code 368—Magnesium Oxide Crucibles: This waste consists of magnesium oxide ceramic crucibles and fragments. The crucible pieces will range from large chunks (two to three inches in one dimension) to dust. The crucibles may contain residual salts from the pyrochemical processes from which they were generated. The salts may contain metals, such as calcium and magnesium, entrained in the salt matrix.[P016A, P032A, P035A, P052A]

Table 23-1. Miscellaneous RF debris waste in the AMWTP inventory.

IDC	Title	Dates of Generation[d]
302	Benelex and Plexiglas	November 1972–February 1986[a]
33A	WETP Bin Program – Combustibles A	June 1993
33B	WETP Bin Program – Combustibles B	June 1993
368	Magnesium Oxide Crucibles	October 1986
370	Leco Crucibles	August 1971–June 1982
374	Blacktop, Concrete, and Construction Rubble [c]	November 1972–June 1988
391	Crucibles & Sand	March 1972–February 1984
392	Sand, Slag, & Crucibles	May 1972–July 1981
416	Zinc Magnesium Alloy Metals	June 1980
44A	WETP Bin Program – Glass	July 1993
460	Washables, Rubber, Plastic	May 1972
464	Benelex and Plexiglas	November 1971–August 1984
900	LSA Paper, Plastic, etc.	January 1970–May 1975
950	LSA Metal, Glass, etc.	January 1970–July 1975
960	Concrete, Asphalt, etc.	September 1971–November 1973
970	Wood	January 1972–September 1978
020	Wood & Benelex	Prior to June 1971[c]
080	Equipment	Prior to June 1971[c]
750	Pits 11 & 12 Debris	pre-1971
760[b]	RFP Debris	pre-1973

a. Does not include containers with a prefix of RD94 and pack dates in August 1994.

b. IDC 760 created by AMWTP and assigned to RFP debris waste.

c. Two digit IDCs that may have been used prior to June 1971.(C267A)

d. Dates of generation are based on available shipping papers and may not reflect the actual inventory at INL due to incomplete records for waste received prior to 1973.

Item Description Code 370—Leco Crucibles: This waste consists of aluminum silicate-based ceramic crucibles with approximately 0.5 percent chromium, and ranging from 4-inch long by 3/4-inch square to 1-inch high by 1-inch diameter.(P012A, P035A) Used Leco crucibles contained a spent accelerator metal (copper, iron, tungsten, or tin). Plutonium and an accelerating metal were fused into the Leco crucible. The crucibles may be intact or in pieces. Leco crucibles were segregated into unused (blank) crucibles and used (fused) crucibles. Only blank crucibles were shipped to INL.(P024A, P035A, P052A)

Item Description Code 374—Blacktop, Concrete, and Construction Rubble: This waste consists of blacktop, concrete, reinforced concrete, cinder blocks, bricks, dirt, and sand generated by any plutonium area. Limited amounts of waste may be damp or wet. Waste may also include some combustibles such as surgeon's gloves and Kimwipes. The majority of this waste was generated by plutonium recovery operations (Building 771), machining operations (Building 776), fire cleanup operations at Building 776, and cleanup operations conducted by size reduction (Building 776) personnel at any plutonium area. IDC 374 waste was generated primarily from cleanup of spills and leaks, process changes, maintenance, and decontamination or decommissioning operations.(P024A) As generated by RF, IDC includes waste containers that are greater than 50% by volume debris, as well as waste container that are greater than 50% by volume soil. IDC 697 (374A) was created by AMWTP to allow segregation of containers assigned IDC 374 by RF but contain greater than 50 percent by volume soil. Containers of waste that contain greater than 50% by volume debris retain the original IDC 374 assigned by RF. The title IDC title for IDC 374 was also modified by AMWTP from "Blacktop, Concrete, Dirt, and Sand" to "Blacktop, Concrete, and Construction Rubble" to reflect that the IDC RF-374 waste stored at INL is only debris.

Item Description Code 391—Crucibles & Sand: This waste consists of magnesium oxide crucibles and limited amounts of magnesium oxide sand.(P024A) The crucibles will range from half to three quarters the length and diameter of the original crucible to pieces approximately the size of the larger grains of sand. This waste may also contain small beads of magnesium metal condensed from magnesium metal vapor. The vapor was produced by the action of excess calcium metal on magnesium oxide.(P035A)

Item Description Code 392—Sand, Slag, & Crucibles: This waste consists of magnesium oxide crucibles, calcium fluoride slag, and limited amounts of magnesium oxide sand. The crucibles will range from half to three quarters the length and diameter of the original crucible to pieces approximately the size of the larger grains of sand. The slag consists primarily of calcium fluoride contaminated with uncoalesced plutonium, some residual calcium metal or calcium salt, magnesium metal, and trace amounts of the reduction pyrotechnic initiator (powdered magnesium, sodium peroxide, and potassium iodate).(P035A, P061A)

Item Description Code 416—Zinc Magnesium Alloy Metals: This waste consists of single drum of metal billets or ingots generated by a R&D project being developed to cleanup pyrochemical salts. The weight percent of magnesium in the alloy ranged from 10 to 30 percent.(P052A) This IDC was generated during pyroredox development efforts and could consist of zinc/magnesium, calcium/magnesium/zinc, or calcium/zinc alloy.(C182A)

Item Description Code 44A—WETP Bin Program – Glass: This waste consists of a mixture of waste with IDCs 440 and 442 (Glass/Raschig Rings).

Item Description Code 460—Washables, Rubber, Plastic: This IDC was generated during 1972 only. Generation process/source is unknown.

Item Description Code 464—Benelex and Plexiglas: This waste consists of the same material as IDC 302. IDC 464 was replaced by IDC 302 in 1973.(P024A)

Item Description Code 750----Pits 11 & 12 Debris: This waste consists of containers of debris generated at RF prior to October 1972 and placed in Pits 11 and 12 upon receipt of the RF waste at INL. The waste packaged in drums was subsequently retrieved from Pits 11 and 12 between 1974 and 1979 during the Initial Retrieval Project and overpacked before being placed into the TSA-RE. (C618A, P443A. P759S) The majority of the drums were placed into cargo containers, but some drums were placed into bins or overpacked in 85-gallon drums. Waste may include combustibles (paper, rags, clothing, wood, and plastic), filter paper, CWS filters, HEPA filters, non-combustibles (glass, scrap metal, ceramics, graphite, firebrick, equipment, and concrete). Waste may also contain less than 50 percent by volume soil. IDC 750 was assigned by AMWTP because the majority of the waste was generated prior to the use of IDCs at RF.

Item Description Code 760---RFP Debris: Waste includes all RFP debris waste prior to 1973 that was retrieved from Pad 1, Cells 1 and 2 and that has not been commingled with any other known waste generator (e.g., INL waste). The waste also includes, but is not limited to loose/repackaged and/or overpacked RFP waste. Waste may include combustibles (e.g., paper, rags, clothing, wood, and plastic), filter paper, CWS filters, HEPA filters, and non-combustibles (e.g., glass, scrap metal, ceramics, graphite, firebrick, equipment, and concrete). Containers of debris waste may also contain < 50% by volume RFP soil or sludge.

Item Description Code 900—LSA Paper, Plastic, etc.: This waste consists primarily of combustible wastes such as plastics, paper, wipes, empty polyethylene bottles, booties, filter paper, and surgical gloves. The waste was generated outside of glovebox lines, primarily in Building 774.(P024A, U092A, U059A) A few of the drums are contaminated with DU and originated from a non-plutonium area. The waste may be dry or damp. Up to 15 pounds of Portland cement was added to drums containing damp waste. Limited amounts of non-combustible waste may also be included. IDC 900 was replaced by IDC 330, dry combustibles, in 1974.(P024A)

Item Description Code 950—LSA Metal, Glass, etc.: This waste consists primarily of non-combustible wastes such as electrical conduit, water and steam pipes, tools, control panels, electronic instrumentation, light bulbs, windows, office equipment, lead shielding, and structural metal.(P024A) The waste was generated primarily outside of glovebox lines in Building 774.(P024A, U059A, U092A) A few drums of this waste may be non-plutonium contaminated. The waste may also include some combustible wastes. Wastes generated inside the glovebox lines in Building 774 may also be included. IDC 950 has not been used since 1974.(P024A) Metal and glass wastes have since been segregated.

Item Description Code 960—Concrete, Asphalt, etc.: This waste consists primarily of concrete and asphalt, but may also include limited amounts of dirt and combustible wastes.(P024A) The wastes were generated in Buildings 771 and 774, and the 904 Pad.(U059A, U092A) IDC 960 was replaced in 1973 by IDC 374, Blacktop, Concrete, Dirt, and Sand (which was changed to Blacktop, Concrete, and Construction Rubble by AMWTP).

Item Description Code 970—Wood: This waste consists of lumber, plywood sheeting, filter frames, and ladders. Combustible wastes such as plastic sheeting and wipes, and non-combustible wastes including nails and sheetrock may also be present in the waste.(P024A) The wastes were generated in Building 771 and the 904 Pad.(U059A, U092A) IDC 970 was discontinued in 1978, and was replaced by IDC 330, Paper and Rags-Dry.(P024A)

Potential waste material parameters for miscellaneous debris waste containers, including packaging materials, are listed in Table 23-2. RF waste management and inspection protocol allowed containers of miscellaneous debris wastes to contain up to 10 percent of other wastes other than that assigned to the container. In addition, construction/decontamination and decommissioning debris from the 1969 fire at RF may have been included in miscellaneous debris waste containers. VE of debris containers confirmed the presence for various debris items within containers.(P016A, P021A, P022A, P226A, P402A, U175A)

Table 23-2. Potential waste material parameters for the miscellaneous debris waste containers.

Potential Waste Material Parameters	Examples
Steel (packaging materials)	55-gallon drum
Plastics (packaging materials)	90-mil drum liner, O-ring bag, drum bag
Plastics (waste materials)	Inner container bags (Polyethylene bags), two- or four-liter Nalgene bottles used as inner containers, tape, incomplete combustion products (e.g., plastic pieces), Plexiglas® (a transparent plastic material made from methyl methacrylate) glovebox windows; polypropylene, polyethylene, PVC, Teflon®, Hypalon®, Tygon®, bags, sheeting; polyethylene bottles; plastic suits, nylon-reinforced plastic tent structures; Ful-Flo® incinerator filters, fibrous polypropylene filters, miscellaneous plastics; PVC sheeting; horsetail stubs (plastic bag end wrapped in tape); miscellaneous plastic items including surgical gloves, containers, tubing, piping, handles, sleeving, clamshell containers, 90-mil liners and lids, and polyethylene sheeting.
Cellulosics	Cardboard liner, fiberboard liner and discs, incomplete combustion products (e.g., wood paper, cloth, and wood items, Filter media, wooden filter frames, wipes, tape, empty cement bags, benelex® coated with fire-retardant paint; wet cloth, dry cloth, paper, wood, wipes, towels, rags, filter paper; wood frames, cardboard; Fibre-Paks; shoe covers; coveralls, booties, gloves; filters; cardboard roll ends.

Potential Waste Material Parameters	Examples
Other Inorganic Materials	Fire brick, construction bricks, cinder blocks, Oil-Dri®, vermiculite, Portland cement, vermiculite, Oil-Dri®, Raschig rings, glass, filter media, Ful-Flo filters, batteries
Other Metals	Lead liner, copper, benelex® (lignocellulose hardboard) with lead sheeting attached; lead, lead shielding, structural metal, miscellaneous lead containing, items such as lead tape, leaded rubber aprons, lead sheeting, leaded rubber gloves, lead bricks, glovebox port covers; miscellaneous metal items/debris including screwdrivers, Volrath® stainless steel cans, nuts, bolts; piping, flanges, valves, tools, equipment; water and steam pipes, tools; control panels, electronic instrumentation, office equipment; magnesium oxide ceramic crucibles and fragments; undissolved or precipitated calcium; batteries, thermometers, gauges, and switches; soldering paste; beryllium scrap; zinc/magnesium, calcium/magnesium/zinc, or calcium/zinc alloy billets or ingots.
Iron metals/alloys	Metal waste items, Filter frames, paint cans, metal hinges, pieces of angle iron; miscellaneous metal debris; electrical conduit; piping, flanges, valves, tools, equipment; drums.
Aluminum-Based Metals/Alloys	Filter media, filter frames, Aluminum waste items, miscellaneous metal debris; piping, flanges, valves, tools, equipment; aluminum silicate-based ceramic crucibles.
Other Organic Material	Neoprene, leaded glass, Oil-Dri® (absorbent clay), Florco® (absorbent clay), vermiculite; filter media, asbestos, fiberglass pipe, furnace insulation, fire blankets, asbestos gloves; glovebox HEPA filters media; Absolute 8 × 8 filters, insulation, filter media, cement; glass; concrete, cinderblocks, fire brick, construction brick; graphite; Raschig rings; residual amounts of inorganic liquid (less than one percent by volume); small amounts of process residue (e.g., calcium fluoride slag; magnesium oxide sand; residual calcium metal or calcium salt, magnesium metal, reduction pyrotechnic initiator (powdered magnesium sodium peroxide, and potassium iodate); trace amounts of aluminum nitrate and aluminum fluoride); crucibles, funnels, boats, process fixtures, pour rods, stir rods, asphalt, ceiling tiles.
Rubber	Surgical gloves, rubber gaskets; leaded gloves and aprons; rubber and latex gloves; air hoses; glovebox gloves.

23.1 Waste Generation

The TRU debris wastes were generated at the RF from any of the buildings and processing operations that manufactured, recovered, and treated plutonium metal and plutonium-containing materials. TRU waste also was generated during activities that supported plutonium production, including maintenance, laboratory, and R&D operations and non-routine events, including renovations, spills, fires, and decommissioning. Plutonium-related operations conducted in Buildings 371, 374, 559, 707, 771, 774, 776, 777, and 779 generated the vast majority of the TRU waste at the plant. Process descriptions for the RF operations are described in detail in Section 3.0. Additional activities specific to the generation of some of the miscellaneous debris wastes addressed in this section are presented below.

23.1.1 Sand, Slag, and Crucible Waste Generation

Sand, slag, and crucible debris wastes (IDCs 368, 370, 391, and 392) were generated during plutonium recovery operations in Building 771, from R&D activities in Building 779 and during pyrochemical recovery operations in Building 776.(P024A, P052A, P061A, P062A, P070A, P078A, U092A, U059A)

Magnesium oxide crucibles were placed in a stainless-steel reduction vessel, and the void between the crucible and the vessel was filled with magnesium oxide sand. Plutonium tetrafluoride from the hydrofluorination process was mixed with calcium metal and a pyrotechnic initiator (magnesium metal, sodium peroxide, and potassium iodate) and placed in the crucible. The vessel was sealed, placed in an induction furnace, purged with argon, and heated. The resulting reaction reduced the plutonium tetrafluoride to plutonium metal, and oxidized the calcium metal to form calcium fluoride (slag). The purified plutonium metal "button" was separated from the crucible and reaction by-products.(P061A) Unpulverized sand and crucible waste (IDC 391) was generated when the sand and crucible residues were separated from the slag. Unpulverized sand, slag, and crucible waste (IDC 392) was generated when the crucible and reaction by-products were not separated prior to disposal.(P052A) Plutonium metal meeting purity requirements was sent to the foundry in Building 707. The plutonium metal containing unacceptable impurities was sent for electrorefining.(U013A) The reduction and button break-out process is presented in Figure 23-1.

Leco crucible waste (IDC 370) was generated in Buildings 559 and 771 laboratories. Samples of metals, oxides, or stainless-steel pins were placed in a Leco crucible with an accelerator metal (typically copper, iron, tungsten, or tin) and heated. The heating caused the carbon in the sample to react, forming carbon dioxide. The carbon dioxide was measured to determine the carbon content of the sample. Figure 23-2 shows the carbon analysis process.(P052A)

Magnesium oxide ceramic crucible waste (IDC 368) was generated from the electrorefining process used to purify plutonium from non-specification plutonium. At the end of the process, the crucible was allowed to cool before it was removed from the furnace. The crucible was broken and packaged as waste. The purified plutonium metal was separated from the salt and anode heel.(P139A, P163A)

23.2 Waste Packaging

The debris wastes were packaged using several combinations of drum bags, polyethylene bags, and O-ring bags.(P222A) Variations on the layers of confinement are IDC specific. See RPT-TRUW-05 for specific layers of confinement for IDCs. Drums that exceed the IDC-specific TRUPACT-allowed containment layers will be flagged for treatment.

23.2.1 Drums

A variety of packaging techniques were used for the debris wastes. Debris wastes were placed directly into a lined 55-gallon drum or bagged out of the glovebox line in PVC or up to three polyethylene bags.(P012A, P015A, P021A, P024A) Some debris waste may also have been packaged in half-gallon or one-gallon polyethylene bottles within the plastic bags(P001A, P043A) or Fibre-Paks. For example, glass was either loaded directly into a lined 55-gallon drum or double-bagged out of the glovebox line. To increase loading, many glass items were broken prior to packaging. Light bulbs may have been crushed prior to disposal. The waste may also have been collected in metal cans, polyethylene bottles, or Fibre-Paks prior to placement in a lined 55-gallon drum. After removal from the glovebox, the waste was placed in the drum or in Fibre-Paks, which were then placed in the drum. Prior to packaging, sharp edges were taped or wrapped with paper wipes to prevent puncturing the liners.

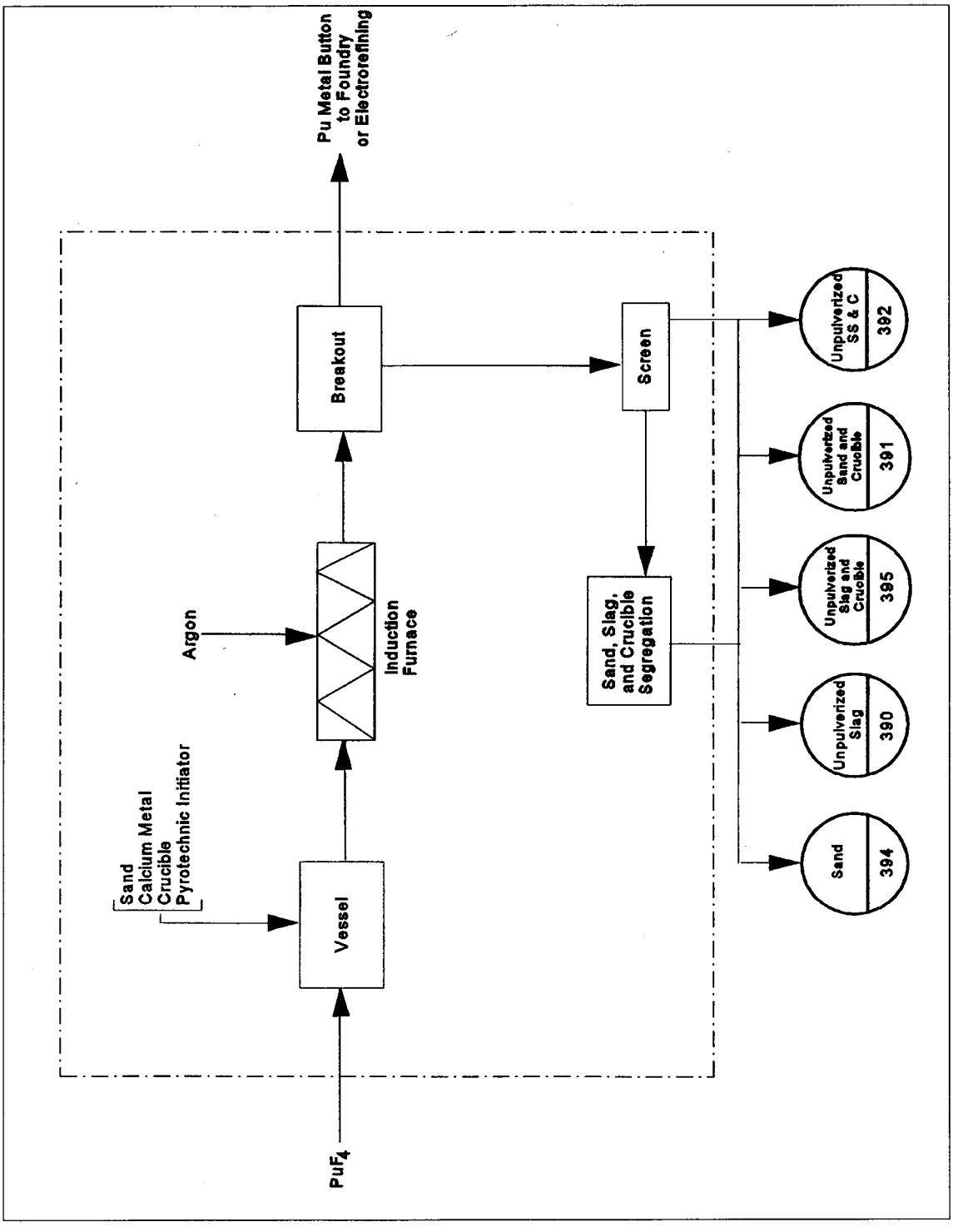

Figure 23-1. Reduction and button break-out process.

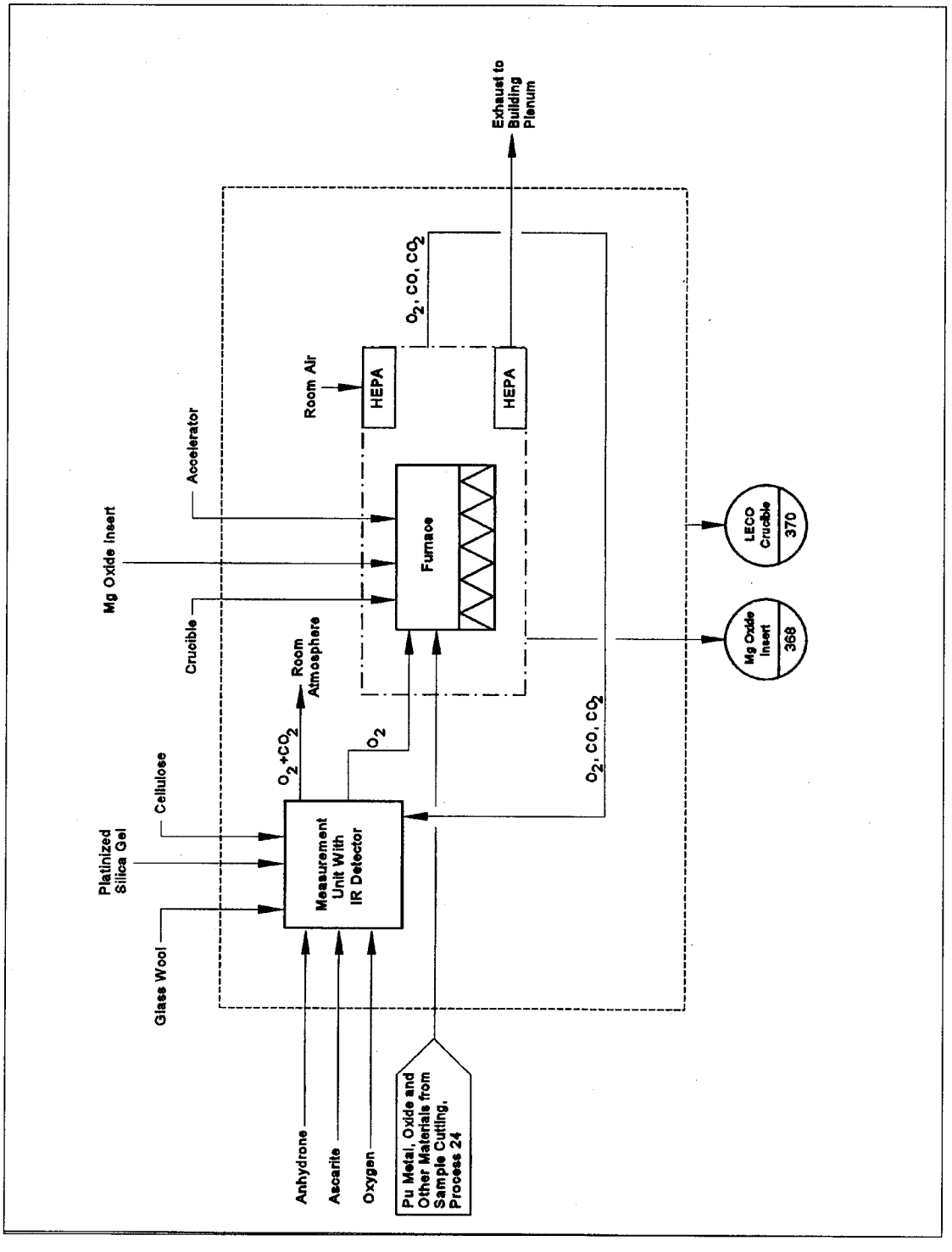

Figure 23-2. Carbon analysis process.

Depending on waste packaging requirements at the time, several combinations of bags and liners were used to prepare 55-gallon drums for shipment. From 1970 to 1972, waste drums were lined with one or two polyethylene drum bags. Cardboard liners might also have been used to line the inner drum bag. Use of the 90-mil rigid polyethylene liner began in 1972, although a cardboard liner may have been used in addition to or in lieu of the 90-mil rigid polyethylene liner, and drums packed after this date have been observed with no liner or variable liner configurations. The rigid liner was placed in each drum and lined with one polyethylene round bottom drum liner bag or two polyethylene drum bags. A PVC O-ring bag and a polyethylene bag were used if the drum was attached to the glovebox. A fiberboard liner and discs may also have been used between the waste packages and the drum liners for puncture protection. Lead drum liners placed between the drum and rigid liner were also used in some instances.

Cardboard liners might also have been used to line the inner drum bag. Use of the 90-mil rigid polyethylene liner began in 1972. The rigid liner was placed in each drum and lined with one polyethylene round bottom drum liner or two polyethylene drum bags. A PVC O-ring bag and a polyethylene bag were used if the drum was attached to the glovebox. A fiberboard liner and discs may also have been used between the waste packages and the drum liners. Lead drum liners were also used in some instances.

When a drum was full, the drum bag(s) were typically either twisted and taped or twisted and tied. The lid was then secured with a bolted ring, and a tamper-indicating device was attached to the drum.(P008A, P012A, P016A, P024A, P063A, P486A)

After drums were inspected, one to two quarts of absorbent material (Oil-Dri®) or concrete (e.g., filter media) was placed on the top of the outer, sealed polyethylene drum bag.(P001A, P016A, P024A) This procedure changed in February 1982 when vermiculite was used to fill the space between the outer, sealed polyethylene drum bag and the top of the 90–mil rigid liner. During RTR examinations of waste containers, quantities of absorbent were identified that varied significantly from expected quantities, or absorbent was identified outside of expected timeframes. In addition, some containers contained an absorbent other than that expected or contained no absorbent at all. The quantity of vermiculite varied from three to twelve pounds according to the amount of waste contained in each drum.(P024A, P222A, P225A)

23.2.2 Boxes/Bins

Some of the miscellaneous debris wastes were packaged in boxes. Wastes were sometimes wrapped in plastic before being placed in prepared waste boxes. Large waste items may have been processed in size reduction facility include including cutting and crushing.

Debris wastes were either placed directly into prepared waste boxes or wrapped in plastic before being placement in a box, depending on contamination levels. Non-combustible items were removed from the waste bag. Portland cement and Oil-Dri® were used when necessary to absorb liquids.(C053A, C289A, P024A P067A, P164A) The quantity of absorbent typically added to each box ranged from an estimated 25 to 200 pounds, although quantities varied significantly.

Waste boxes were lined with a polyethylene box bag, and the bag was then lined with a cardboard liner. After the box was filled with waste, the bag ends and sides were folded toward the box center, and tape was used to seal the folded edges. Prior to 1972, uncoated plywood boxes were used. Coating plywood boxes with FRP began in 1972.(P024A)

Beginning in 1974, line- and non-line generated combustible wastes were repackaged into 4 × 4 × 7-foot boxes.(P024A) The wastes were initially packaged in drums at each waste-generating area. After the drums were assayed for plutonium content, drums containing discardable amounts of plutonium were transported to the size reduction facility in Building 776 for repackaging into boxes.

IDC 33A, 33B, and 44A consisted of bagged waste removed from IDCs 330, 336, 337, 440, 441, and 442 drums for VE. The bags were breached during VE and subsequently placed directly into bins. Waste may also have been repackaged in polyethylene bags after visual examination. Wire mesh was placed in the bins and the bins were then overpacked in SWBs.

23.3 Waste Characterization

Miscellaneous Debris waste was characterized based on knowledge of the material, knowledge of the processes generating the waste, RTR review of the waste, VE, surrogate waste analysis, and headspace gas analysis. This waste is at least 50 percent (by volume) debris and is classified as a heterogeneous waste. Potential hazardous chemical constituents applicable to the miscellaneous debris wastes addressed in this section are presented by IDC in Table 23-3. PCBs are not expected to be found in concentrations greater than 50 parts per million within this waste stream. However, light ballast have been reported in IDC RF440 and RF441. As a result, IDC RF44A may contain small electrical items exceeding 50 parts per million PCB.(P393A)

23.3.1 Radionuclides

Information about radionuclides common to all RF wastes is presented in Section 3.0. The radionuclides potentially contained in the miscellaneous debris wastes are as follows:

- The radionuclides of concern for the miscellaneous debris wastes are: ^{238}Pu, ^{239}Pu, ^{240}Pu, ^{242}Pu, ^{233}U, ^{234}U, ^{238}U, and ^{241}Am.(P012A
- The two most prevalent radionuclides in miscellaneous debris waste containers are ^{239}Pu and ^{240}Pu.
- The remaining WIPP-tracked radionuclides, ^{137}Cs and ^{90}Sr, are not expected to be present in measurable quantities in debris wastes except for containers of IDC 480 due to disposal of isotopic sealed source material. ^{137}Cs and computed ^{90}Sr are anticipated radionuclides for the light metal debris and may be detected during NDA.
- Uranium-235 and ^{238}U may also be present in waste containers depending on the relative mixture of EU and DU in the waste.

Table 23-3. Potential hazardous chemical constituents of miscellaneous debris wastes.

IDC	Chemical Constituents(, C245A, P015A, P016A, P024A, P237A, P307A, P368A)
302	1,1,1-trichloroethane, carbon tetrachloride, trichloroethylene
33A	1,1,1-trichloroethane, 1,1,2-trichloro-1,2,2-trifluroethane, carbon tetrachloride, lead, mercury, methylene chloride
33B	1,1,1-trichloroethane, 1,1,2-trichloro-1,2,2-trifluroethane, carbon tetrachloride, lead, methylene chloride
368	None
370	None
374	1,1,1-trichloroethane, 1,1,2-trichloro-1,2,2-trifluoroethane, carbon tetrachloride, methylene chloride
391	None
392	None
416	None
44A	1,1,1-trichloroethane, carbon tetrachloride, lead, mercury, methylene chloride
460	None
464	lead
900	1,1,1-trichloroethane, 1,1,2-trichloro-1,2,2-trifluoroethane, carbon tetrachloride, lead, methylene chloride, trichloroethylene, xylene
950	1,1,1-trichloroethane, 1,1,2-trichloro-1,2,2-trifluoroethane
960	None
970	1,1,1-trichloroethane, 1,1,2-trichloro-1,2,2-trifluoroethane, carbon tetrachloride, lead, methylene chloride, trichloroethylene, xylene

24.0 SOLIDIFIED ORGANIC HOMOGENEOUS SOLIDS

This waste group consists of organic liquid wastes that were immobilized in Building 774. The liquid wastes were generated in numerous buildings on the plant site, but originated primarily from Buildings 707 and 777. The majority of the liquids was oil and chlorinated solvents generated from machining and degreasing of plutonium metal.(P016A, P024A, P052A)

Historic IDC descriptions and dates of generation for this waste in the AMWTP inventory are presented by IDC in Table 24-1.(P090A, P367A, P368A, P370A, U059A, U069A, U092, U128A) Although WSPFs (INW164.001 and INW309.001) were initially planned by the 3,100 m^3 Project for the solidified organics (IDCs 700 and 801) and organic set ups (IDC 003) wastes, it was determined that the solids sampling data were insufficient to support characterization of the waste streams, as required by the WIPP WAP.(U098A, U099A) The wastes are characterized as homogeneous organic solids and as such require additional solid sampling and analysis for PCB content.

Table 24-1. Organic homogeneous solids wastes in the AMWTP inventory.

IDC	Title	Dates of Generation[c]
003[a]	Organic Set Ups, Oil Solids(C063A) Grease-Bldg. 774(C063A) Organic Setups(P012A) Solidified Organics(P014A)	July 1971–March 1986[b]
700	OASIS Waste(P012A)	March 1986–May 1986
801	Solidified Organics Solidified Organics-Building 774(P001A) Cemented Grease (OASIS)(P063A)	January 1986–September 1988
743[a]	Pits 11 and 12 Organic Set Up	1969 September 1972

a. Prior to 1971, this waste was not identified by an IDC; therefore, AMWTP has assigned IDC 743 based on the drum prefix assigned by RF for organic setups generated in Building 774.

b. Dates of generation do not include waste retrieved from Pits 11 and 12 (i.e., wastes identified by the ID numbers 743).

c. Dates of generation are based on available shipping papers and may not reflect the actual inventory at INL due to incomplete records for waste received prior to 1973.

Item Description Code 003—Organic Setups, Oil Solids: This waste consists of various organic liquids that were transferred to Building 774 where they were mixed with Microcel-E (a synthetic calcium silicate) to form a grease or paste-like material.(P002A, P024A) The organic liquids were primarily oil and chlorinated solvents generated from machining and degreasing of plutonium metal in Buildings 707 and 777.(P016A, P024A, P052A) Small amounts of Oil-Dri® were sometimes added to the mixture as well.(P024A) The process generating this waste operated until November 1985.(P052A)

Item Description Code 743—Pits 11 & 12 Organic Setups: This waste consists of solidified organic sludge generated from the same process as IDC 003 that were shipped to INL prior to October 1972 and placed into Pits 11 and 12. The waste was subsequently retrieved from

the Pits and placed into the TSA-RE prior to 1979. IDC 743 was assigned by AMWTP because the majority of the waste was generated prior to the use of IDCs at RF.

Item Description Code 700—OASIS Waste: This waste consists of various organic liquids cemented to form a solid monolith. IDC 700 was assigned to the waste generated by the experimental prototype OASIS process in Building 774 that would later generate IDC 801. The organic liquids solidified and the solidifying agents should be the same for IDCs 700 and 801.(P016A) The OASIS process began operation in November 1985.(P016A, P052A) Additional information about the process and waste is provided in the IDC 801 description.

Item Description Code 801—Solidified Organics: This waste consists of various organic liquids immobilized into a solid monolith in the OASIS process in Building 774. Oils and chlorinated solvents from machining and degreasing of plutonium metal in Buildings 707 and 777 were the primary liquids treated by the OASIS process.(P016A, P052A) The OASIS process also treated organic liquids from Buildings 334, 371, 443, 444, 447, 559, 771, 776, 778, 779, 865, 881, 883, and 991.(U040A, U043A) The organic liquids were immobilized by mixing with water, ENVIROSTONE emulsifier, accelerator, and gypsum cement. The emulsifier was a polyethylene glycol ether, and the accelerator contained gypsum and potassium sulfate.(P066A)

Typical waste material parameters for the solidified organic homogeneous solid waste containers, including typical packaging materials, are described in Table 24-2. RF waste management and inspection protocol allowed containers of wastes to contain up to 10 percent of an IDC other than that assigned to the container.(P016A) Items identified in containers during 3,100 m^3 Project examinations of the solidified organic homogeneous solids waste are listed in detail in INEL-96/2080 and include miscellaneous metals.(U099A) RTR and VE of other RF debris waste streams have identified debris items including combustibles (paper, rags, gloves, etc.), plastic (bottles, tubing bags, etc.), glass (bottles, Raschig rings, beakers, etc.), lead (glass, tape, gloves, scrap, etc.), metal (nuts, bolts, cans, welding rods, tools, wire, scrap, etc.), and other debris (concrete, light bulbs, etc.).

Table 24-2. Typical Waste Material Parameters for the Solidified Organic Homogeneous Solid waste containers.(U099A)

Typical Waste Material Parameter	Examples
Steel (packaging materials)	55-gallon drum
Plastics (packaging materials)	90-mil drum liner, O-ring bag, drum bags
Other Inorganic Materials	Oil-Dri®, vermiculite
Organic Matrix	Cement (ENVIROSTONE emulsifier, gypsum cement, accelerator)/OASIS sludge mixture

24.1 Waste Generation

The solidified organic homogeneous solids wastes were produced by mixing organic liquids with solidification material.(P002A) The liquids were transferred to Building 774 by pipeline or in containers. The organic liquids were generated in Buildings 334, 371, 443, 444, 447, 559, 707, 771, 776, 777, 778, 779, 865, 881, 883, and 991.(U040A, U043A) In 1985, organic wastes were segregated into either the low level or TRU tank systems. Prior to this, both low-level and TRU liquids may have been included in the solidified organic homogeneous solids waste.(U040A)

24.1.1 Solidification Process

Organic setups waste (IDC 003) was produced by mixing the organic liquid with Microcel-E, a synthetic calcium silicate.(P002A) Small amounts of Oil-Dri® were sometimes added to the mixture as well.(P024A) The amounts of materials added to the mixture were not metered; however, the operator would adjust the composition if the outgoing mixture did not have a paste-like consistency. The mixture would then drop into an O-ring bag contained in a 55-gallon drum.(P016A) The composition of organic setups was approximately 30 gallons of liquid organic waste to 100 pounds of Microcel-E.(P024A) Figure 24-1 represents the flow of organic liquid waste into IDC 003 drums.(P052A)

Solidified organics (IDC 801) and OASIS (IDC 700) wastes were produced by the OASIS process. IDC 700 was assigned to the waste generated by the experimental prototype OASIS process in Building 774 that would later generate IDC 801. OASIS was a batch type process generating one drum per run. Waste oils were pumped into an O-ring bag contained in a 55-gallon drum attached to the bottom of the OASIS glovebox. ENVIROSTONE emulsifier, gypsum cement, and accelerator were also metered into the bag. House water (water which had not been used in any other processes) was added to the mixture as well.(P016A) The typical composition of solidified organic waste was 170 pounds of organic liquid waste, 250 pounds of cement, 25 pounds of emulsifier, 10 pounds of accelerator, and 42 pounds of water.(U010A) After all of the materials were added, a lightning mixer was lowered into the drum. The amount of materials added to the mixture was computer controlled.(P016A) Figure 24-2 represents the flow of organic liquid waste into IDCs 700 and 801 drums.(P052A)

24.1.2 Liquid Waste Generation

Solidified waste oils and solvents were generated primarily in Buildings 707 and 777. Solvent-contaminated (carbon tetrachloride and 1,1,2-trichloro-1,2,2-trifluoroethane) wastes were generated by plutonium machining and tool degreasing. Ultrasonic cleaner baths using 1,1,1-trichloroethane were used to clean parts. Metal turnings and scrap were cleaned in carbon tetrachloride baths before forming the turnings into briquettes.(P052A) Trichloroethane began replacing trichloroethylene for vapor degreasing of parts in plutonium areas beginning around 1973. By the end of 1974, trichloroethylene remained in use in only one plutonium operation, and by February 1975 was used only in research and analytical activities.(P023A) Since 1985, the solidified organic waste was derived almost exclusively from Buildings 707 and 777.(U040A)

Trace amounts of miscellaneous laboratory wastes including organophosphates and nitrobenzene were also introduced into the solidification process. In addition, PCB contaminated oils were processed until 1979.(P024A) Two documented cases (8/27/76 and 1/26/78) indicate PCB contaminated oils from Building 334 were processed.(C207A, U040A) PCBs are further discussed in Section 24.3.

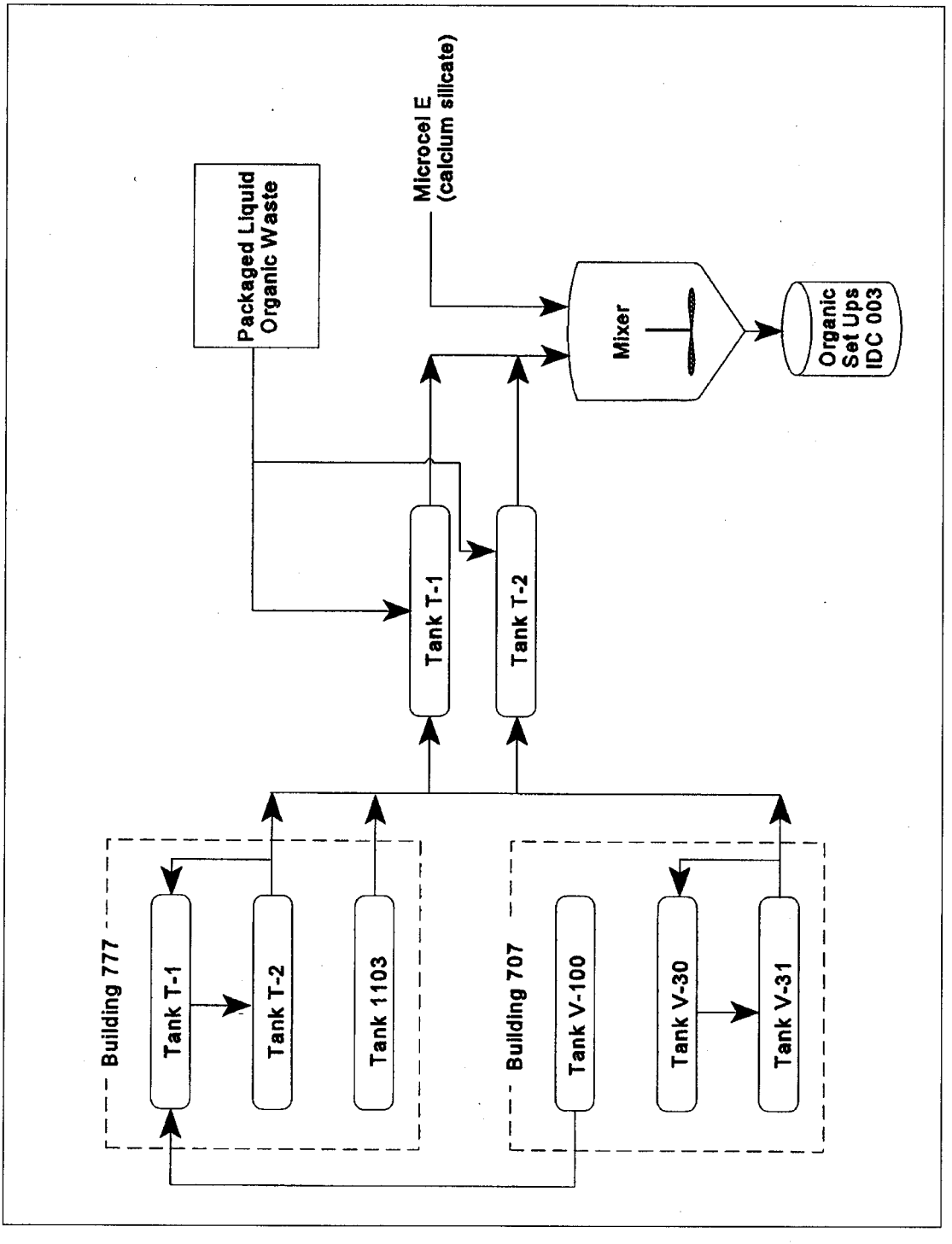

Figure 24-1. Flow of organic liquid waste into IDC 003 drum.

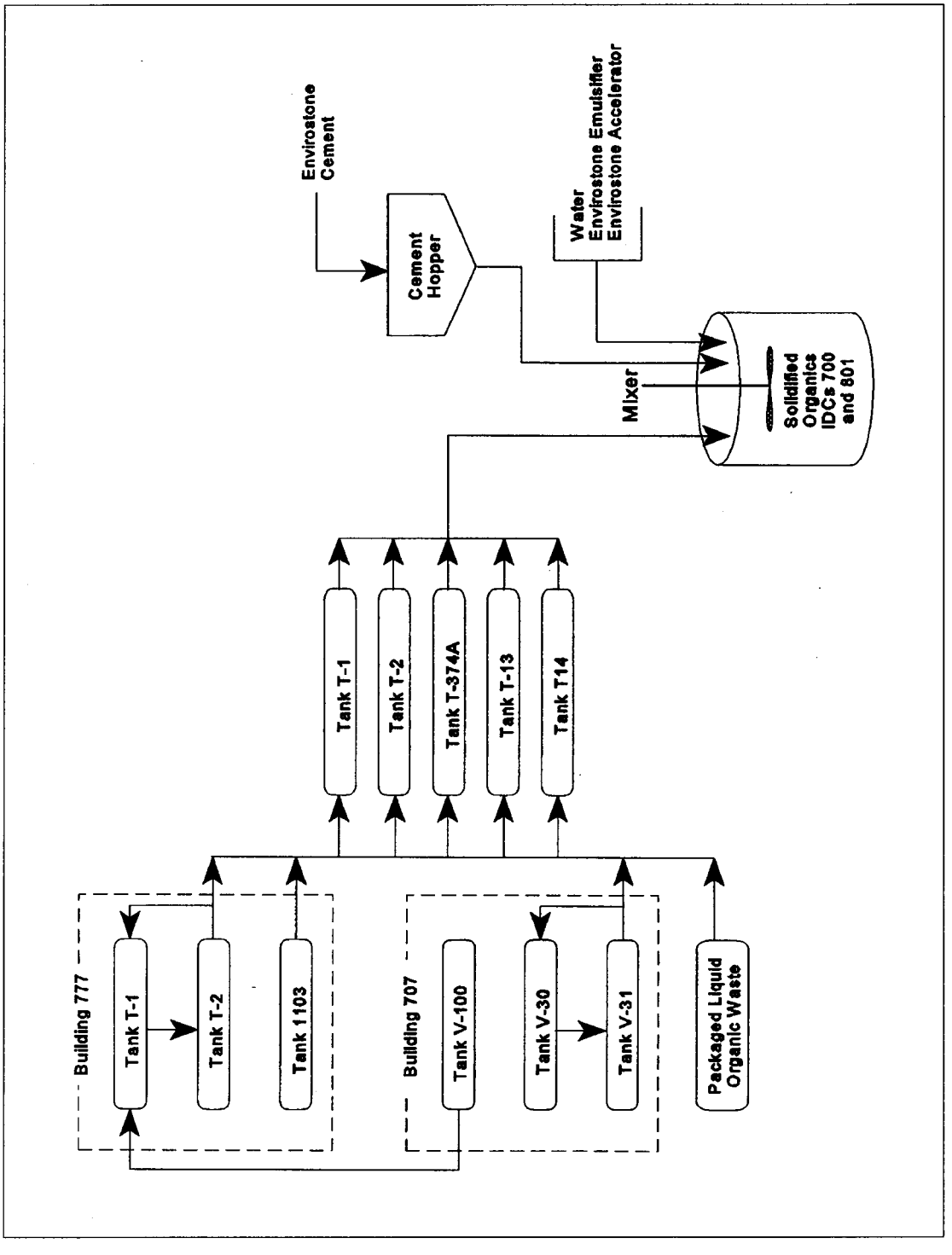

Figure 24-2. Flow of organic liquid waste into IDCs 700 and 801 drums.

A logbook was used in Building 774 to record the types of organic waste and generation source of the liquids that made up IDCs 003, 700, and 801. The date of treatment, generation location, waste description, and volume of waste were entered in the logbook. A description of the organic liquids included in IDCs 003, 700, and 801, the buildings from which they were generated, and the buildings functions are presented in Table 24-3.(U040A, U043A) Information in parentheses does not appear in the log book but is provided as clarification.

24.2 Waste Packaging

24.2.1 Drums

Depending on waste packaging requirements at the time, several combinations of bags and liners were used to prepare 55-gallon drums for shipment. From 1970 to 1972, waste drums were lined with two polyethylene drum bags. About four pounds of Oil-Dri® was placed in the bottom of the drum and in the bottom of each drum bag. Organic setup (IDC 003) waste was then placed in the drum.

Use of the 90-mil rigid polyethylene liner began in 1972.(P024A) The rigid liner was placed in each drum and lined with one polyethylene round bottom drum liner or a polyethylene drum bag.(P016A, P024A, P063A, P064A) A PVC O-ring bag and a polyethylene bag were used if the drum was attached to the glovebox. About four pounds of Oil-Dri® was placed in the bottom of the rigid liner, the round bottom liner or drum bag, and the O-ring bag. The organic liquids were then placed in the O-ring bag along with the solidifying agents.

When a drum was full, the drum liners were twisted and taped closed, the lid was secured with a bolted ring, and a tamper indicating device was attached to the drum.(P012A, P016A, P024A)

During the 3,100 m^3 Project, several combinations of drum bags, poly bags, and O-ring bags used as packaging were identified for the IDC 700 and IDC 801 wastes. Any combination of these plastic bags, provided that three layers of containment (none of which are inner bags) were not exceeded, did not impact acceptability of the drums. Drums that exceeded TRUPACT-allowed containment layers were flagged for treatment in the TRIPS.(U099A)

Prior to 1972, absorbent material (Oil-Dri®) may have been added to the top of the sealed drum bag, which contained the organic setup waste (IDC 003). Since approximately 1972, after drums were inspected, one to two quarts of Oil-Dri® was placed on the top of the outer, sealed polyethylene drum bag. This procedure changed in February 1982 when vermiculite was used to fill the space between the outer, sealed polyethylene drum bag and the top of the 90-mil rigid liner. The quantity of vermiculite varied from three to twelve pounds according to the amount of waste contained in each drum.(P024A) However, during RTR examinations of sludge containers, quantities of absorbent were identified that varied significantly from expected quantities, or absorbent was identified outside of expected timeframes. In addition, some containers contained an absorbent other than that expected or contained no absorbent at all.(U099A)

Table 24-3. Organic liquid wastes included in IDCs 003, 700, and 801.

Building	Building Function	Organic Liquid Waste Description
334	Maintenance shops	waste oil, PCBs, Zyglo (Zyglo is a dye penetrant compound containing fluoranthene, petroleum distillates, and kerosene)(P142A)
371	Plutonium recovery	oil
443	Power plant	oil
444	DU casting and machining, beryllium machining	oil, trichlor (assumed to be 1,1,1-trichloroethane), Freon
447	Building 444 support	oil
559	Production support laboratories	pump oil, oil, toluene/H_3 (assumed to be tritium), silicon oil, organic waste (xylene/DHDECMP [dihexyl-n,n-diethylcarbamoyl methylphosphonate])(C032A, C086A)
707	Plutonium component manufacturing	oil samples, hydraulic oil
771	Plutonium recovery	oil, etch solution, Freon oil, oil/CCl_4, mixed organics, halocarbon oil, TBP (assumed to be tributyl phosphate), organic extract, Chlorothene (Chlorothene is a trade name for 1,1,1-trichloroethane)
776	Pyrochemistry and waste operations	engine oil, lube oil, lathe cutting oil
777	Plutonium component manufacturing and research	coolant oil/carbon tetrachloride, perc (assumed to be tetrachloroethylene), or trichloroethylene
778	Maintenance	oil, Pydraul oil (Pydraul products are hydraulic oils containing triphenyl phosphate, trialkylphenyl phosphates, and alkyl aryl phosphates)(P091A)
779	Plutonium research	hydraulic oil, equipment oil, H_3 (assumed to be tritium)/toluene, Freon
865	DU and beryllium metallurgy research	beryllium waste oil
881	Laboratories and maintenance	oil, machine coolant, perchlor (assumed to be tetrachloroethylene), waste cocktail (assumed to be scintillation cocktail), Varsol oil (Varsol is a trade name petroleum solvent containing primarily saturated hydrocarbons and less than two percent toluene, xylene, and ethyl benzene)(P084A)
883	DU rolling and forming	oil, cooling solvent, D-38 (DU) oil, oil and perk (assumed to tetrachloroethylene)
991	Product warehouse	coolant, band saw coolant

24.2.2 Boxes

There is no documentation that IDCs 003, 700, 801 were packaged in boxes.

24.3 Waste Characterization

Solidified organic homogeneous solids wastes were characterized based on knowledge of the materials, knowledge of the processes generating the wastes, RTR review of the wastes, VEs, and headspace gas analyses. These wastes are at least 50 percent (by volume) inorganic particulates and are classified as homogeneous organic solids wastes.(P141A) Potential hazardous chemical constituents applicable to the solidified organic wastes are presented by IDC in Table 24-4. PCBs with concentrations exceeding 50 parts per million are known to be within IDC 003.(P393A)

Table 24-4. Potential hazardous chemical constituents of solidified organic homogeneous solids waste.

IDC	Chemical Constituents (C245A, P015A, P016A, P319A, P368A)
003 743	1,1,1-trichloroethane, 1,1,2-trichloro-1,2,2-trifluoroethane, carbon tetrachloride, methylene chloride, tetrachloroethylene, trichloroethylene
700	1,1,1-trichloroethane, 1,1,2-trichloro-1,2,2-trifluoroethane, carbon tetrachloride
801	1,1,1-trichloroethane, 1,1,2-trichloro-1,2,2-trifluoroethane, carbon tetrachloride

24.3.1 Radionuclides

The radionuclides and radioassay interferences potentially contained in the solidified organic homogeneous solids wastes are described in the following sections. Information about radionuclides common to all RF wastes is presented in Section 3.0 of this document.

- The radionuclides of concern for IDCs 003, 700, and 801 are ^{238}Pu, ^{239}Pu, ^{240}Pu, ^{242}Pu, ^{233}U, ^{234}U, ^{238}U, and ^{241}Am.
- The remaining WIPP-tracked radionuclides, ^{137}Cs and ^{90}Sr, are not expected to be present in measurable quantities.
- The two most prevalent radionuclides expected in the combustible and plastic waste containers are ^{239}Pu and ^{240}Pu.

Wastes from some of the processes described in Section 3.0 may not be contained in the inventory based on the assigned prefixes; however, it is assumed that repackaged drums could contain waste generated from any process.

Interfering waste contaminants may include aluminum, beryllium, and stainless steel (chromium) that were machined in Building 777.(P079A) Beryllium will also be present, in small quantities, from degreasing solvents generated in Building 444.(P024A)

A log entry from Building 774 indicates the presence of tritium in liquid received from Building 779. The liquid appears to have been cemented and then buried in a combustible wastes drum (IDRF074607832).(U043A)

25.0 ABSORBENTS

This waste group consists of spent absorbent clay material generated in Buildings 559 and 771.(P001A, U092A) Absorbents were used for cleanup of hazardous liquid waste spills, oil absorption, or absorption of other liquids as needed.(P037A, P049A) Absorbents were also added to waste packages and drums having the potential of containing or generating free liquid.(P001A, P014A, P043A) Historic IDC descriptions and dates of generation for this waste in the AMWTP inventory are presented by IDC in Table 25 1.(P090A, P367A, P368A, P370A, U059A, U069A, U092, U128A)

Table 25-1. Absorbents waste in the AMWTP inventory.

IDC	Title	Dates of Generation[a]
375	Oil-Dri®(P001A) Oil-Dri® Residue From the Incinerator(P024A) Oil Dry (P032A)	March 1973–August 1984

a. Dates of generation are based on available shipping papers and may not reflect the actual inventory at INL due to incomplete records for waste received prior to 1973.

Item Description Code 375—Oil-Dri®: This waste consists of spent absorbent clay materials.(P001A, P012A, P014A, P032A, P043A) One of the most common absorbents used at RF was Oil-Dri®.(P037A, P049A) Other absorbents used at RF include floor dry, vermiculite, sorbent booms, and rags.(P037A, P052A)

Potential waste material parameters for absorbents waste containers, including typical packaging materials, are described in Table 25-2. RF waste management and inspection protocol allowed containers of waste to contain up to 10 percent of IDC wastes other than that assigned to the container.(P016A)

Table 25-2. Potential waste material parameters for absorbents waste containers.

Potential Waste Material Parameters	Examples
Steel (packaging materials)	55-gallon drum
Plastics (packaging materials)	90-mil drum liner, O-ring bag, drum bag, inner container bags, polyethylene bottles, clamshell
Other metals	Metal cans
Other inorganic materials	Glass, leaded glass, absorbents (e.g., vermiculite, Oil-Dri®)(P015A)
Cellulosics	Cardboard (fiberboard) liner, tape, rags, sorbent booms

25.1 Waste Generation

Most (64 percent) of the absorbents waste was generated by operations conducted in Building 776, maintenance, laundry, and utilities. The remaining waste was generated at the Building 771 plutonium recovery incinerator sorting box during processing of above-discard contaminated wet combustible wastes. Combustible wastes fed to the incinerator were received from production processes in Buildings 371, 707, 771, 776, 777, and 779.(P012A) Oil-Dri®, which had been added to wet combustible wastes when initially packaged, could not be incinerated and was segregated from the combustible waste and repackaged for disposal.(P024A) The absorbent wastes may be contaminated with the same constituents as the combustible wastes fed to the incinerator as listed in Section 17.0.

Absorbent wastes from the Building 559 analytical laboratory may have been generated from cleanup of a spill. The source or composition of the spill could not be identified, and the waste may contain any of the chemicals used in the analytical laboratory.

25.2 Waste Packaging

25.2.1 Drums

Oil-Dri® from the plutonium recovery incinerator sorting box was packaged in polyethylene bottles or metal paint cans and double-bagged out of the glovebox in PVC and polyethylene plastic bags.(P012A, P024A) Each bag was sealed with tape before placement in a prepared 55-gallon drum. The waste may also be packaged in a polyethylene residue process container (clamshell) before being placed in the drum.(P024A)

The exact packaging configuration of absorbents waste from Building 559 is not known; however, standard glovebox bagout operations (double-bagged in plastic) were most likely used when packaging this waste.(P001A, P012A)

Depending on waste packaging requirements at the time, several combinations of bags and liners were used to prepare 55-gallon drums for shipment. Until 1972, waste drums were lined with one or two polyethylene drum bags. Cardboard liners may have been used to line the inner drum bag. Use of 90-mil rigid polyethylene liners began in 1972, but individual drums may or may not include them.(P024A) The rigid liner was placed in each drum and lined with one polyethylene round bottom drum liner or two polyethylene drum bags.(P008A, P012A, P024A, P063A, P064A) A fiberboard liner and discs may also have been used between the waste and the drum liners.(P012A) When a drum was full, the drum liners were twisted and taped closed, the lid was secured with a bolted ring, and a tamper indicating device was attached to the drum.(P001A, P012A, P024A)

25.2.2 Boxes

There is no evidence that absorbents waste was packaged into boxes.(P024A)

25.3 Waste Characterization

Absorbents waste was characterized based on knowledge of the material and knowledge of the processes generating the waste. This waste is at least 50 percent (by volume) inorganic particulates, and is classified as a homogeneous waste.(P141A) The potential hazardous chemical constituents applicable to the absorbents waste group are presented by IDC in Table 25-3. PCBs are not expected in concentrations greater than 50 parts per million within this waste stream.(P393A)

Table 25-3. Potential hazardous chemical constituents of absorbents waste.

IDC	Chemical Constituents (C245A, P368A)
375	1,1,1-trichloroethane, 1,1,2-trichloro-1,2,2-trifluoroethane, carbon tetrachloride, methylene chloride

25.3.1 Radionuclides

Information about radionuclides common to all RF wastes is presented in Section 3.0. The radionuclides potentially contained in the absorbents waste, and radioassay interferences, are as follows.(P024A)

- The radionuclides of concern for IDC 375 are ^{238}Pu, ^{239}Pu, ^{240}Pu, ^{242}Pu, ^{233}U, ^{234}U, ^{238}U, and ^{241}Am. Documented assay results for absorbents waste indicate the presence of WG Pu; however, the waste could also be contaminated with ^{241}Am or EU because the absorbents waste from Building 771 (container prefix 0001) were generated by removing Oil-Dri® from combustible wastes that originated from numerous production processes.(P024A, P052A)

- The two most prevalent radionuclides in absorbents waste are ^{239}Pu and ^{240}Pu.

- Uranium-235 and ^{238}U may also be present in some absorbents waste containers depending on the relative mixture of WG Pu, EU, and DU in the waste.

- The remaining WIPP-tracked radionuclides, ^{137}Cs and ^{90}Sr, are not expected to be present in measurable quantities in this waste.

Due to the potential variability of absorbents waste, documentation on the radionuclide form, particle size, and distribution, interfering waste contaminants, and physical matrix parameters has not generally been identified. The only exception to this is the assumption that hydrogen is present from plastic packaging materials.

26.0 GRIT

This waste group consists primarily of iron fines, iron pellets, and aluminum oxide used in grit blasting operations in Building 707 and 771. Historic IDC descriptions and dates of generation for this waste in the AMWTP inventory are presented by IDC in Table 26-1.(P090A, P367A, P368A, P370A, U059A, U069A, U092, U128A)

Table 26-1. Grit waste in the AMWTP inventory.

IDC	Title	Dates of Generation[a]
372	Grit	June 1974–January 1984

a. Dates of generation are based on available shipping papers and may not reflect the actual inventory at INL due to incomplete records for waste received prior to 1973.

Item Description Code 372—Grit: This waste consists primarily of aluminum oxide and pin-head size iron fines and pellets used in grit blasting operations. Grit blasting media such as walnut shells, glass beads, and ceramic beads may also be included.(C120A, P024A, P035A)

Potential waste material parameters for grit waste containers, including typical packaging materials, are described in Table 26-2. RF waste management and inspection protocol allowed containers of waste to contain up to 10 percent of IDC wastes other than that assigned to the container.(P016A)

Table 26-2. Potential waste material parameters for grit waste containers.

Potential Waste Material Parameters	Examples
Steel (packaging materials)	55-gallon drum
Plastics (packaging materials)	90-mil drum liner, O-ring bag, drum bag
Other Metals	Volrath stainless steel cans
Iron Metals/Alloys	Iron fines, iron pellets
Other Inorganic Materials	Aluminum oxide, silica, glass or ceramic beads, absorbents (e.g., vermiculite, Oil-Dri®)
Plastic (waste materials)	Small polyethylene bags, bottles

26.1 Waste Generation

The grit blasting process in Building 707 was used to affix serial numbers and part type identification to plutonium parts. Each part was mounted in a holding fixture along with a stencil indicating the serial number and part type. The part and stencil were placed in the grit blaster which etched the part through the stencil with aluminum oxide grit. Grit was recycled in the grit blaster and was infrequently replaced.(P035A, P060A)

Grit was also generated during plutonium recovery operations in Building 771.[P001A, P024A, P049A] Pinhead-sized iron fines or pellets, walnut shells, glass beads, or ceramic beads were used to grit blast various metal wastes such as molds contaminated with plutonium above the EDL.[C120A, P024A]

26.2 Waste Packaging

26.2.1 Drums

Grit from plutonium recovery operations was packaged in one-gallon polyethylene bottles and double-bagged out of the glovebox in PVC and polyethylene bags. Each bag was sealed with tape before placement in a prepared 55-gallon drum.[P024A]

In Building 707, grit waste was bagged out of the glovebox in a PVC or polyethylene bag; the bag was closed by sealing with tape, and then placed in an 8801 or 8802 Volrath stainless steel can. Cans of waste were then placed in a prepared 55-gallon drum.[P024A]

Depending on waste packaging requirements at the time, several combinations of bags and liners were used to prepare 55-gallon drums for shipment. Until 1972, waste drums were lined with one or two polyethylene drum bags. Cardboard liners may have been used to line the inner drum bag. Use of 90-mil rigid polyethylene liners began in 1972, but individual drums may or may not include them.[P024A] The rigid liner was placed in each drum and lined with one polyethylene round bottom drum liner or two polyethylene drum bags.[P008A, P012A, P024A, P063A, P064A] A fiberboard liner and discs may also have been used between the waste and the drum liners.[P012A] When a drum was full, the drum liners were twisted and taped closed, the lid was secured with a bolted ring, and a tamper-indicating device was attached to the drum.[P001A, P012A, P024A]

After drums were inspected, one to two quarts of absorbent material (Oil-Dri®) was placed on top of the outer, sealed polyethylene drum bag. This procedure was changed in February 1982 when vermiculite was used to fill the space between the outer, sealed polyethylene drum bag and the top of the 90-mil rigid liner. The quantity of vermiculite varied from three to twelve pounds according to the amount of waste contained in each drum.[P024A] During RTR examinations of waste containers, quantities of absorbent were identified that varied significantly from expected quantities, or absorbent was identified outside of expected timeframes. In addition, some containers contained an absorbent other than that expected or contained no absorbent at all.

26.2.2 Boxes

There is no evidence that grit waste was packaged into boxes for shipment to INL.[P024A]

26.3 Waste Characterization

Grit waste was characterized based on knowledge of the material and knowledge of the processes generating the waste. This waste contains an estimated 80 percent or more (by volume) inorganic non-metal debris, and is classified as a heterogeneous waste.(C204A) The potential hazardous chemical constituents applicable to the grit waste group are presented by IDC in Table 26-3. PCBs are not expected to be found in concentrations greater than 50 parts per million within this waste stream.(P393A)

Table 26-3. Potential hazardous chemical constituents of grit waste.

IDC	Chemical Constituents(P024A, P368A)
372	chromium

26.3.1 Radionuclides

Information about radionuclides common to all RF wastes is presented in Section 3.0. The radionuclides potentially contained in the grit waste, and radioassay interferences, are as follows:

The radionuclides of concern for grit waste are those associated with WG Pu and include ^{238}Pu, ^{239}Pu, ^{240}Pu, ^{241}Pu, and ^{242}Pu. Grit waste from Building 707 was generated from etching of plutonium parts and grit from Building 771 was generated from recovery of plutonium from various metal surfaces and the radionuclide contamination will consist of WG Pu.

- The two most prevalent radionuclides in grit waste are ^{239}Pu and ^{240}Pu as the primary radionuclides in WG Pu.(P024A)
- The remaining WIPP-tracked radionuclides, ^{233}U, ^{234}U, ^{238}U, ^{241}Am, ^{137}Cs, and ^{90}Sr, are not expected to be present in measurable quantities in this waste.

Due to the potential variability of grit waste, documentation on the radionuclide form, particle size, and distribution, interfering waste contaminants, and physical matrix parameters has not generally been identified. The only exception to this is the assumption that hydrogen is present from plastic packaging materials.

27.0 AMERICIUM PROCESS DEBRIS

This waste group consists of metal, glass, plastic, combustible, and other miscellaneous waste generated primarily from the renovation of the americium recovery line in Building 771 at RF.(P024A) Historic IDC descriptions and dates of generation for this waste in the AMWTP inventory are presented by IDC in Table 27-1.(P090A, P367A, P368A, P370A, U059A, U069A, U092, U128A)

Table 27-1. Americium process debris waste in the AMWTP inventory.

IDC	Title	Dates of Generation[a]
241	Americium Process Residue	October 1971–December 1972

a. Dates of generation are based on available shipping papers and may not reflect the actual inventory at INL due to incomplete records for waste received prior to 1973.

Item Description Code 241—Americium Process Residue: This waste consists of metal, glass, plastic, combustible, and other miscellaneous wastes. Metal waste items may include piping, flanges, valves, tools, and equipment. Glassware may consist of flasks and broken ion-exchange columns. Plastic items such as PVC sheeting and polyethylene bottles are also included in this waste. The bottles may contain liquids. Other wastes may include HEPA, Ful-Flo, and glass filters; leaded glovebox gloves; rags; and wipes.(P012A, P015A, P024A)

Potential waste material parameters for americium process waste containers, including typical packaging materials, are described in Table 27-2.(P024A) RF waste management and inspection protocol allowed containers of waste to contain up to 10 percent of IDC wastes other than that assigned to the container.(P016A) None of the americium process debris wastes were characterized by the 3,100 m^3 Project, and no RTR data were generated.(P321A)

Table 27-2. Potential waste material parameters for americium process debris waste containers.

Potential Waste Material Parameters	Examples
Steel (packaging materials)	55-gallon drum
Plastics (packaging materials)	90-mil drum liner, O-ring bag, drum bag, inner container bags
Other Inorganic Materials	Glassware, glass filters, HEPA and Ful-Flo filters, absorbents (e.g., vermiculite, Oil-Dri®)
Other Metals	Lead shielding, lead liners, lead tape, leaded rubber gloves
Cellulosics	Fibre-Paks, rags, wipes, paper
Plastic	PVC piping, PVC sheeting, polyethylene bottles, miscellaneous plastic
Rubber	Leaded glovebox gloves
Iron-based Metals/Alloys	Piping, flanges, tools, equipment

27.1 Waste Generation

Americium recovery began at RF in 1954 and continued through 1986 when DOE declared americium a waste material. In 1963 and 1964, an americium recovery system was installed in Building 771 to remove americium and other contaminants from plutonium metal site returns and recover americium from the plutonium recovery peroxide precipitation effluent, anion exchange effluent and MSE salts. The process used anion- and cation-exchange, evaporation, precipitation, and calcination techniques. Nitric acid, hydrochloric acid, ammonium thiocyanate, oxalic acid, and water were used in the recovery process.(C047A, P113A, P442A, U047A) Americium process residues (IDC 241) were generated during the renovation of the americium recovery line.(C115A, P024A) Small amounts of process chemicals were washed from equipment with water; the equipment was then dried with rags or wipes prior to removal from the glovebox line.(P024A) Filters removed from the line may contain nitrate salts from the presence of nitric acid.(U060A)

27.2 Waste Packaging

27.2.1 Drums

Miscellaneous process equipment and waste (IDC 241) was single- and double-bagged out of the glovebox in plastic (PVC and PVC/polyethylene) bags that were sealed with tape. Most the waste was then placed in Fibre-Paks. The Fibre-Paks were usually wrapped with lead tape, depending on radiation levels and whether or not the waste drum was lead lined. Larger waste items were placed directly in a prepared waste drum. Generally, lead shielding was used for all waste containers. Shielding was provided by either lead-taping the Fibre-Paks, lead-lining the waste drums, or a combination of both.(P015A, P024A)

Depending on waste packaging requirements at the time, several combinations of bags and liners were used to prepare 55-gallon drums for shipment. Until 1972, waste drums were lined with one or two polyethylene drum bags. Cardboard liners may have been used to line the inner drum bag. Use of 90-mil rigid polyethylene liners began in 1972, but individual drums may or may not include them.(P024A) The rigid liner was placed in each drum and lined with one polyethylene round bottom drum liner or two polyethylene drum bags.(P008A, P012A, P024A, P063A, P064A) A fiberboard liner and discs may also have been used between the waste and the drum liners.(P012A) When a drum was full, the drum liners were twisted and taped closed, the lid was secured with a bolted ring, and a tamper-indicating device was attached to the drum.(P001A, P012A, P024A)

After drums were inspected, one to two quarts of absorbent material (Oil-Dri®) was placed on top of the outer, sealed polyethylene drum bag. This procedure was changed in February 1982 when vermiculite was used to fill the space between the outer, sealed polyethylene drum bag and the top of the 90-mil rigid liner. The quantity of vermiculite varied from three to twelve pounds according to the amount of waste contained in each drum.(P024A) During RTR examinations of waste containers, quantities of absorbent were identified that varied significantly from expected quantities, or absorbent was identified outside of expected timeframes. In addition, some containers contained an absorbent other than that expected or contained no absorbent at all.

27.2.2 Boxes

There is no evidence that americium process debris waste (IDC 241) was packaged into boxes for shipment to INL.(P024A)

27.3 Waste Characterization

Americium process debris waste was characterized based on knowledge of the material, and knowledge of the processes generating the waste. This waste contains at least 50 percent (by volume) debris, and is classified as a heterogeneous waste.(P141A) A RCRA hazardous waste determination for americium process residue and the identification of radionuclide contaminants contained in the waste are presented in the following sections.

27.3.1 Hazardous Waste Determination

The materials in this waste group do not qualify for any of the exclusions outlined in 40 CFR 260 or 261. The wastes do not exhibit the characteristics of ignitability, corrosivity, or reactivity. Americium process debris wastes may exhibit the characteristic of toxicity for lead. The wastes were not mixed with a listed hazardous waste. There is no evidence that americium process debris waste exhibits any other characteristic of hazardous waste. The potential hazardous chemical constituents applicable to the americium process debris waste group are presented by IDC in Table 27-3. PCBs are not expected to be found in concentrations greater than 50 parts per million within this waste stream.

Table 27-3. Potential hazardous chemical constituents of americium process debris waste.

IDC	Chemical Constituents(P024A, P368A)
241	lead, methylene chloride, xylene

27.3.2 Radionuclides

The americium process residue waste was generated during renovation of the americium recovery process line; therefore, the wastes are contaminated with WG Pu, significant quantities of ^{241}Am, and other radionuclides.(P053A, P164A, P442A) Information about radionuclides common to all RF wastes is presented in Section 3.0.The radionuclides potentially contained in the americium process debris waste, and radioassay interferences, are described in the following sections.

- The radionuclides of concern for americium process debris waste are primarily those associated with WG Pu and include ^{238}Pu, ^{239}Pu, ^{240}Pu, ^{241}Pu, ^{242}Pu, and ^{241}Am.
- The two most prevalent radionuclides in americium process debris waste are ^{239}Pu and ^{240}Pu as the primary radionuclides in WG Pu.(P024A)
- The remaining WIPP-tracked radionuclides, ^{233}U, ^{234}U, ^{238}U, ^{137}Cs, and ^{90}Sr, are not expected to be present in measurable quantities in this waste.

Due to the potential variability of americium process debris waste, documentation on the radionuclide form, particle size, and distribution; interfering waste contaminants; and physical matrix parameters has not generally been identified. The only exception to this is the assumption that hydrogen is present from plastic packaging materials.

28.0 DEPLETED URANIUM OXIDE

This RO waste consists of DU metal or alloy pieces (machining chips, turnings, or fines) that were oxidized (thermally stabilized) by calcining or roasting in a fine uranium oxide powder. The waste may also contain debris items including hunks of uranium metal, tooling, work gloves, and other items contaminated with DU. IDC description and dates of generation for this waste in the AMWTP inventory are presented by IDC in Table 28-1. (P759S, P647A, P443A, C618A)

Table 28-1. Depleted uranium oxide waste in the AMWTP inventory.

IDC	Title	Dates of Generation[a]
751	Pits 11 and 12 Roaster Oxide	pre-1971

a. Dates of generation are based on available shipping papers and may not reflect the actual inventory at INL due to incomplete records for waste received prior to 1973.

Item Description Code 751---Pits 11 & 12 Roaster Oxide: Containers of RO generated in Buildings 444 or 883 at RF prior to October 1972 were retrieved from Pits 11 and 12 prior to 1979 during the Initial Retrieval Project. The RO consists of DU metal or alloy pieces (machining chips, turnings, or fines) that were oxidized (thermally stabilized) by calcining or roasting resulting in a fine uranium oxide powder (black or black-gray in color) that is approximately three to four millimeters in diameter and varies in texture from relatively fine grained to a more coarse-grained. The waste may also contain debris items, including hunks of uranium metal, tooling, work gloves, and other items contaminated with DU. The retrieved waste was packed into 83-gallon drums, M-III bins, and cargo containers stored in the TSA-RE. IDC 751 was assigned to the RO containers by AMWTP because the majority of the waste was generated prior to the use of IDCs at RF.(P759S, P647A, P443A)

Potential waste material parameters for DU oxide waste containers, including typical packaging materials, are described in Table 28-2.

Table 28-2. Potential waste material parameters for depleted uranium oxide waste containers.

Potential Waste Material Parameters	Examples
Steel (packaging materials)	30-gallon drum or 55-gallon drum
Plastics (packaging materials)	O-ring bag, drum bag, gloves
Other Inorganic Materials	Absorbents (e.g., vermiculite, Oil-Dri®), uranium oxide powder
Other Metals	Uranium metal or alloy pieces, miscellaneous metal debris

28.1 Waste Generation

After 1960, DU oxide also referred to as roaster oxide (e.g., roasted fines, turnings, etc) stored from previous and subsequent operations at RF were included with other DU waste and sent to the INEEL for disposal. (P047A, P084A) DU waste (e.g., machining chips, turnings, and fines) incineration in Building 447 converted the pyrophoric metal to a stable oxide or RO prior to the shipment. The conversion (roasting) process was not 100 percent efficient and did not preclude the possibility that pyrophoric material may still be present in some containers of DU oxide wastes that were sent to Idaho.(P443A)

DU oxide is a potential hazard due to the pyrophoricity of uranium metal when in the form of chips, shavings, or powder. Uranium metal in finely divided form is readily ignitable, and uranium scrap from machining operations is subject to spontaneous ignition. This reaction can usually be avoided by storage under dry (without moisture) oil.(P443A) It has been determined during handling of the Pits 11 and 12 waste containers that some of the depleted uranium oxide waste containers were assigned IDC 950 by RF in mid-1971. IDC 950 is defined in RF AK, as LSA metal, glass, etc., but the AK does not indicate that the waste included drums of RO.(P024A)

28.2 Waste Packaging

28.2.1 Drums

During the IDR project, drums were retrieved from Pits 11 and 12, overpacked into 83-gallon drums, cargo containers, and M-III bins. Cargo containers and M-III bins were stored on TSA-RE Pad R Cell 1, 83-gallon overpacks were stored in the TSA-RE on Pad 1 Cells 7 or 8. Breached, leaking, or externally contaminated drums were wrapped in plastic and placed into M-III bins. At the beginning of the ITR, project drums were overpacked into 83-gallon drums. Beginning in April 1975, intact containers were placed in cargo containers. Prior to overpack into 83-gallon drums, retrieved 55-gallon drums were triple-bagged in plastic, taped, and placed into the overpack drum, with approximately 50 pounds of absorbent material between the second and third bags, and absorbent material between the outer bag and overpack drum.(P443A, C618A)

28.2.2 Boxes/Bins

Some of the waste retrieved from Pits 11 and 12 was placed in M-III bins (DOT 7A steel boxes). The M-III bin dimensions are 50 3/8 inch length × 58 3/8 inch width × 72 3/8 inch height and holds eight 55-gallon drums or a combination of six 55-gallon and two 83-gallon drums or two Tri-Wall containers.(P753A)

28.3 Waste Characterization

The final waste characterization for waste to be shipped to the WIPP will be documented on a WSPF. The RF wastes were shipped to the INEEL prior to the RCRA regulations and under ICC regulations for radioactive waste. Assignment of HWNs will occur during characterization and development of specific waste stream profiles for shipment to WIPP and will be based upon additional characterization information.(P443A)

28.3.1 Hazardous Waste Determination

Roaster oxide has been determined to be non-hazardous if at the time of retrieval the container is intact. If the container is breached an evaluation of applicable EPA HWNs will be performed. HWNs will be assigned to breached containers on a case-by-case basis and will be based on the type and sources of waste within close proximity of the parent container.(D063A)

28.3.2 Radionuclides

Much of the waste shipped during the 1954 to 1971 time frame may contain TRU isotopes with less than 100 nanocuries per gram activity range. Based on the shipping records as entered into the WILD, approximately 78 percent of the waste volume shipped to the INEEL was generated in the RF plutonium processing and production facilities, and is assumed to be TRU contaminated. The principal radionuclides contained in RF waste are those identified in WG Pu (e.g., ^{238}Pu, ^{239}Pu, ^{240}Pu, ^{241}Pu, and ^{242}Pu), EU, and DU. Due to ^{241}Pu decay and ingrowth of ^{241}Am, this radioisotope is expected in any RF wastes containing plutonium. Americium-241 can be detected at considerably higher relative activities than would be expected from ingrowth alone in wastes containing chemically separated materials from the purification of plutonium. Other radionuclides may also be found in some RF wastes generated from R&D, analytical processing, tracer studies, and special order work, such as ^{244}Cm, ^{232}Th, ^{236}U, ^{233}U, ^{137}Cs, ^{90}Sr and ^{237}Np.(P443A)

Appendix A

Acceptable Knowledge Inventory

Appendix A
Acceptable Knowledge Inventory

This appendix provides the AMWTP Acceptable Knowledge Source Document Inventory relevant toRF wastes. Gaps in the numbering scheme are present because the missing documents are not relevant to RF.

Ref	Title/Description	Summary	Date
C001A	Internal correspondence to distribution. "Content Code 7 Waste." TLC-1-83.	Summary of discussion between Tom Clements and Chuck Wickland about content code 7 sludge.	01/17/83
C002A	Internal correspondence to C. E. Wickland. "P-Ci Calculations for WG Pu."	Weight %, specific activity, alpha activity, and equivalent plutonium curie activity for typical RFP transuranic waste.	11/30/83
C003A	External letter with attachments to Albert E. Whiteman, DOE/RFAO. "Rockwell Discussions with EG&G Idaho, Inc." (certification statements and data package deficiencies). 86-RF-1518.	Actions required by RFP to correct deficiencies on transuranic waste sent to INEL.	05/08/85
C004A	Memorandum to J. R. Nicks, Area Manager, RFAO. "Rockwell WIPP-WAC Nonconforming Sludge and Other Waste Management Concerns."	Letter from WIPP to RF that itemizes the nonconforming wastes from Rocky Flats. The letter provides status of treatment operations in the first quarter of FY85.	01/14/85
C005A	Internal correspondence to L. A. Cook. "Addition of Content Code 303 to the Certifiable Waste Categories." TLC-11-86.	Scarfed graphite chunks information.	01/23/86
C006A	Internal correspondence to Distribution. "Box and Drum Identification to meeting WIPP Requirements."	Proposed changes for drum and box identification at RFP to meet WIPP requirements.	02/04/86
C007A	External letter to Ann Ficklin, Manager Solid Waste Operations, Rockwell International. "Item Description Codes." JDW-08-86.	Letter from INEL to RF accepting IDCs 368, 700, 701 and 702.	03/27/86
C008A	Internal correspondence to Distribution. "Certification Waste Documentation."	The letter contains information on IDCs that will be certified to the WIPP criteria.	05/09/86
C009A	Internal correspondence to J. M. Bower. "Addition of Content Codes 312 and 377 to the Certifiable Waste Category." TLC-40-86.	IDCs 312 (coarse graphite) and 377 (coarse firebrick) are added to the list of certifiable wastes stored at the RWMC.	05/19/86
C010A	External letter to W. D. Reinhart, Manager Waste Certification, Rockwell International. "Nonstandard Shipment Approval." JDW-14-86.	Listing of approved 800-series cemented wastes approved for shipment to INEL.	06/19/86
C011A	Letter to Distribution. "TRU Waste Determination."	Information on specific activity associated with Pu, Am, and U-235.	10/21/86
C012A	Internal Correspondence to G. L. Hickle. "Diatomite-Cement-Sludge Mixture."	Information on the ratio of cement/diatomite to sludge for Building 374.	12/15/86
C013A	Letter to Distribution. "TRU/LLW Determination for Waste to Meet the WIPP-WAC."	Discussion of sludge picocuries/gram for final waste form TRU/LLW determination in IDC 007/803 sludges.	02/18/87
C014A	Internal correspondence to B. C. Barrett. "IDC and WFN Revision."	Information to correlate IDCs to WIPP waste form numbers.	03/24/87

Ref	Title/Description	Summary	Date
C015A	Internal correspondence to B. C. Barrett. "Certified IDC Update."	Information on certification of IDCs 335 and 490. Also, data on production of Building 374 sludge drums.	04/15/87
C016A	Internal correspondence to Waste Review Board. "Waste Container Tare Weights."	Documentation of container tare weights.	04/20/87
C017A	Internal letter to B. A. Reynolds. "Solid Waste Information Management System Data Package."	Letter regarding assignment of 0.2 g Pu to grams assayed as zero g Pu.	05/06/87
C018A	Internal letter to W. D. Reinhart. "Guidelines for Repackaging Waste at Size Reduction."	Guidelines for repackaging Drums of combustibles and metal into metal boxes at Size Reduction.	06/02/87
C019A	Internal correspondence to R. P. Brugger. "Drum Paint Requirements."	Response to WIPP request for painting waste drums the same as waste boxes.	07/06/87
C020A	Facsimile transmissions to Al Morgan, NMC. "Drums to be shipped as TRU Mixed Waste to 664."	List of lead drums for shipment.	09/22/87
C021A	Internal correspondence to R. D. Mullet. "RCRA Mixed Waste IDCs."	Description of new and revised IDCs for mixed waste.	10/05/87
C022A	Internal correspondence to All Supervision. "New and Revised Waste Item Description Codes (IDCs)."	Description of new and revised IDCs for mixed IDCs and combustibles.	11/30/87
C023A	Internal correspondence to W. D. Reinhart. "Funding EG&G Evaluation of Sludge Processing Techniques."	Several memos regarding evaluation of free liquids in RFP sludge waste.	02/11/88
C024A	Internal correspondence to Distribution. "Waste IDCs for Combustibles."	Description of IDCs used to segregate combustibles. IDCs 322, 323, and 324 were deleted.	02/19/88
C025A	Internal correspondence to B. T. Reich. "Air Sparging t o Eliminate Pyrophoric Sodium."	Description of air sparged pyrochemical salts from LANL.	02/25/88
C026A	External letter to Jeff Paynter, Rocky Flats Plant. "Content Code Description Data for TRUPACT II Payload Compliance Plan." TLC-22-88.	Information about INEL's program to verify content code descriptions.	04/04/88
C027A	Internal correspondence to E. A. Dicarlo. "Disposal of Organic Lab Waste (DHDECMP in Xylene) from the Plutonium Lab, Bldg. 559."	Information regarding generation and possible disposal for DHDECMP in xylene lab waste.	04/18/88
C028A	External letter to Sheila Hailey, LMITCO. "Comments on EDF RWMC-942, Rev 0; INEL/INT-97-00214, Rev. 0."	A review of the assignments of D001 and D002 to combustible and plastic wastes and D003 to leaded rubber.	11/14/97
C029A	Internal correspondence to G. L. Aguero. "Counting IDCs 800 through 823 on Segmented Drum Counters."	Procedural steps for assay of IDCs 800 – 823 materials on SGS counters.	04/29/88
C030A	Internal correspondence e to Distribution. "Item Description Codes (IDCs) for Non-PSZ Combustible and Depleted Uranium Oxide."	Description of new IDC for combustibles and D-38 oxide.	05/12/88
C031A	Internal correspondence to Distribution. "Line Generated Waste Drum Inspection."	List of IDCs requiring inspection.	08/24/88
C032A	External Letter to J. N. Davis, Idaho National Engineering Laboratory. "Data Package Information Change for Drum D40197-0743-18283." 88-RF-2813.	Description of one drum (IDC 801) containing xylene.	09/09/88

Ref	Title/Description	Summary	Date
C033A	External letter to J. Paynter, Rockwell International. "Content Code 700." DMH-1-88.	Letter from INEL requesting certification information on IDC 700 drums.	12/22/88
C034A	Memorandum to A. E. Whiteman, Area Manager, RFAO. "RFP Certification and QA Plan Formal Approvals and Reaudit."	Requested topics for WIPP-WACCC audit in January 1989.	12/20/88
C035A	External letter to Marilyn Warrant, Sandia National Laboratories. "Assay Information for Current Content Code Assessment." 89-RF-0195. *Held at DOE-ID as "Possibly UCNI."*	Responses to questions raised about RFP assay.	01/18/89
C036A	Internal correspondence to Distribution. "Random Surveillance Implementation."	Random surveillance of waste program implemented on 2/6/89.	01/30/89
C037A	Internal correspondence to Distribution. "New IDCs." WCP7-28.	Description of IDCs 809, 854, 855, and 856.	02/08/89
C038A	Internal correspondence to C. E. Trump. "Deviation from WO-4034, Waste Packaging Requirements." WCP7-29.	Description of new requirements for IDCs 338 and 342.	02/08/89
C039A	Internal correspondence to B. C. Barrett. "Radionuclide Information Required for TRUPACT II Shipments." WCP8-20.	Documentation of RFP isotopic distribution, decay heat, specific activity, and alpha curies for WR plutonium.	03/23/89
C040A	Internal correspondence to Distribution. "Changes to Random Surveillance Program."	Change in procedures for issuing waste boxes to waste generators.	04/10/89
C041A	External letter to C. D. Bretzke, Rocky Flats Plant. "Transuranic Waste Stream Profile Statements." TLC-65-89.	INEL acceptance of IDCs 338, 342, 809, 854, 855, and 856.	05/08/89
C042A	Internal correspondence to R. C. Lerche. "Hazardous Constituent Information." WCP8-85.	Characterization of IDCs 340, 333, and 331.	05/30/89
C043A	Internal correspondence to Distribution. "New IDC/Revised IDCs."	Descriptions of IDCs 860, 443, and 444. IDCs 855 and 856 were deleted.	07/03/89
C044A	External letter to Dale Wells. EG&G Idaho, Inc. "Information Request Concerning New IDCs and Resin in IDC 806."	WFN assignment for IDCs 809, 854, 855, and 856. Reply to INEL regarding resin in IDC 806 drums.	07/08/89
C045A	Internal correspondence to J. A. Detamore. "TRUPACT II Waste Requirements." PT-76.	Requirements to be implemented for TRU waste to meet TRUPACT II shipping requirements.	07/25/89
C046A	Use of Passive-Active Drum Counter. Presentation of the Safeguards Measurements Group, Rockwell International, Rocky Flats Plant.	Three presentations on various assay topics.	1988
C047A	Interview Record and associated documentation of William V. Conner. *Held at DOE-ID for FOIA/PA review.*	Interview with good details on historical information on Pu lab and Am recovery.	08/13/91
C048A	Interview Record of Mike Simmons. *Held at DOE-ID for FOIA/PA review.*	Information on Building 444 operations.	08/06/91
C049A	Interview Record of Ronald P. Teel. *Held at DOE-ID for FOIA/PA review.*	Historical information on liquid waste processing.	08/07/91
C050A	Informal memorandum to Al Morgan, EG&G Rocky Flats, Inc. "Creation and deletion dates of IDCs."	Creation and deletion dates from the Safeguards and Accountability Network (SAN).	06/16/94

Ref	Title/Description	Summary	Date
C051A	Telecon with Dick Saiki, EG&G RFP. "Composition of Rocky Flats Leaded Gloves."	Construction and usage information for RFP leaded gloves.	07/19/94
C052A	Telecon with Gary Dingham, EG&G RFP. "RTR Acceptance of Mixed IDCs."	Information on acceptance of mixed IDCs by RTR inspection in the 1980s.	07/27/94
C053A	Telecon with Al Morgan, EG&G RFP. "Usage of IDC 481."	Information on usage of IDCs 480 and 481 relative to metal washing.	01/23/95
C054A	Internal correspondence to Distribution. "Oakridge pH analysis."	PH data for inorganic sludges.	02/01/96
C055A	Internal correspondence to John Krsul. "pH Determination of Drum Free Liquids." ED-AL-(MLA)-96-005.	PH data for inorganic sludges.	02/16/96
C056A	Telecon with Jim Doktor, SafeSites. "Resolution of Solvent Usage with Graphite."	Solvent usage questions and answers for graphite waste generated by the Building 707 Foundry.	03/25/96
C057A	Drum gasket, liner usage at RFP.	Usage dates for drums, gaskets, and liners. Compiled for WIPP information request.	1989
C058A	Informal notes regarding HEPA and Drum Repackaging at the Size Reduction Facility.	Notes on HEPA filters and drum repackaging at Size Reduction.	Not Dated
C059A	Excerpt from Rocky Flats Plant Quality Report August 1986. "Transuranic and Low Level Waste 1985 – 1986." *Held at DOE-ID. Contains sensitive information.*	Information on rejected low-level and transuranic wastes.	1986
C060A	Memorandum to File. "Discrepancy Report on Graphite Waste Group."	Resolution of metal-contaminated graphite information. Results from nonline-generated graphite electrodes in Building 774.	04/02/96
C061A	Memorandum to File. "Graphite Process Procedure from Building 707."	Justification fro usage of procedure FO-0015 as a reference for historical graphite process operations.	04/01/96
C062A	External letter to Frank Czigler, S&W Waste Inc.	Application of F001 – F005 solvent codes.	05/20/87
C063A	External letter to Ann Ficklin, Rockwell International Corporation. "Content Code Reconciliation."	Letter from INEL to RFP to reconcile changes and deletions of IDCs.	11/08/85
C064A	Internal correspondence to T. L. Clements, Jr. "Combustibility of Graphite." DEK-10-86.	An assessment of the combustibility of graphite per WIPP criteria.	12/02/86
C065A	Telecon with Mike Simmons, SMC. "Plating Wastes."	Information about cyanide plating waste transferred to Building 774.	04/08/96
C066A	Telecon with Steve Cunningham, World Wide Security. "Declassification of Graphite Molds."	History of graphite declassification and declassification criteria.	04/23/96
C067A	Telecon with John Collins, RMRS. "IDC 301 Drums from Buildings 371 and 559."	Possible graphite waste generation points for Buildings 371 and 559.	04/24/96
C068A	Memorandum with Linda Hendrickson. "WSRIC Processes that Began after 1989."	Documentation that supercompaction and duct remediation began after 1989.	04/25/96
C069A	Internal correspondence. to Distribution. "New IDC/Revised IDCs."	Descriptions of IDCs 860, 443, and 444. IDCs 855 and 856 were deleted.	07/03/89
C070A	Internal correspondence to A. M. Faucette. "TCLP Analysis of Raschig Rings."	TCLP metals analysis of Raschig Rings.	02/24/94
C071A	Rocky Flats Personnel Interview of John Morrison. *Held at DOE-ID for FOIA/PA review.*	Information on Pu and Am recovery.	08/14/91

Ref	Title/Description	Summary	Date
C072A	Record of Conversation of Rod Hoffman. *Held at DOE-ID for FOIA/PA review.*	Special isotope information.	09/04/91
C073A	Record of Conversation of Maurie Maas. *Held at DOE-ID for FOIA/PA review.*	Liquid waste treatment information.	09/04/91
C074A	External correspondence to Don Kudera, Lockheed Idaho Technologies Company. "Information regarding Three IDC 301 Drums."	Process knowledge for three specific drums of IDC 301. In addition, characterization guidance for broken molds is included.	04/24/96
C075A	Telecon with Don Kudera, Lockheed Idaho Technologies Company, "Prefixes for Organic Sludges."	Verification of organic sludge prefixes at INEL.	05/01/96
C076A	Internal Memorandum to File. "Combustible and Plastic Characterization."	Resolution of EPA Code discrepancies from references used for the Acceptable Knowledge document.	05/23/96
C077A	External Memorandum to K. C. Gerard, Lockheed Idaho Technology Company. "Classification Waste."	Classified waste input from the DOE-RFFO Classification Officer.	04/24/96
C078A	Internal Memorandum to File. "Combustibles and Plastic Characterization."	Resolution of discrepancies between two characterization references. Differences in assignment of EPA codes were identified in AK source documents P037A and P052A.	05/30/96
C079A	Telecon with Karlan Richards, EG&G Rocky Flats, Inc. "Characteristic Codes for B774 Wastes."	Use of characteristic EPA codes on Building 774 combustibles.	09/08/94
C080A	Telecon with Pam Edrich, EG&G Rocky Flats, Inc. "Characterization of Combustible Laboratory Waste."	Characterization guidance used during the 1994 BWR for laboratory-generated combustibles.	09/09/94
C081A	Memorandum to File. "Light Metal Characterization."	Resolution of characterization reference discrepancies for IDCs 480 and 481. Differences in assignment of EPA codes were identified in AK source documents P016A, P052A, P037A, and P015A.	05/29/96
C082A	Telecon with Al Morgan of SafeSites of Colorado. "Generation of Leached Light Metal (IDC 481)."	Resolution of IDC 481 description discrepancy. Metal leaching/washing descriptions were discussed in AK source documents P024A, P090A, and C053A.	05/28/96
C083A	Telecon to Al Morgan, SafeSites of Colorado. "Generation of Leached Light Metal (IDC 481)."	Logic for assigning IDCs 480 and 481 with the same EPA codes.	05/29/96
C084A	Memorandum to File. "Light Metal (IDC 480) Generated in Building 371 Analytical Laboratory."	Disposition of EPA codes assigned to IDC 480 wastes from the Building 371 analytical laboratory.	05/29/96
C085A	Memorandum. "Historical Constituents of IDC 800/801."	Documentation of interviews concerning listed solvents in aqueous laboratory wastes from Buildings 559 and 779.	11/08/93
C086A	Memorandum to Pamela of IT Corporation. "Use of the Complexing Agent DHDECMP." *UCNI document held by DOE-ID.*	Information on the use of DHDECMP and mass of crates loaded with combustible waste.	02/07/89
C087A	Telecon with Carrie Wesley of RMRS. "Process Wastes Treated in Building 374."	Supplementary information on wastes treated in the Building 374 precipitation process.	05/29/96
C088A	Telecon with Rod Hoffman/Bob Riddle of DOE RFFO Classification/SAIC. "Composition of "Grip" and ZPPR Fuel Elements."	Unclassified description of "Grip" and classification guidance for ZPPR fuel elements.	05/29/96

Ref	Title/Description	Summary	Date
C089A	Telecon with Al Morgan of SafeSites of Colorado. "Creation of IDCs 440, 441, 442, 444, and 855."	Summary of discussion with Al Morgan about the creation of glass IDCs.	06/03/96
C090A	Telecon with Ron Bowen of SafeSites of Colorado. "Raschig Ring Tanks in Building 371."	Summary of discussion with Ron Bowen about solvents in Raschig ring tank in B371.	06/03/96
C091A	Memorandum to File from. "Glass Characterization."	Memo summarizing the characterization of LL glass that would not have been sent to INEL.	06/03/96
C092A	Memorandum to File. "Resolution of Conflicting Characterization Information for Waste Group #4."	Resolution to conflicting characterization of IDC 802. Differences in assignment of EPA codes were identified in AK source documents P049A, P016A, U003A, U043A,and C085A.	06/04/96
C093A	Letter assumed to have been written by David P. Simonson to Fred Dowsett of the Colorado Department of Health, and corresponding response letter. Discussion re. Definition of Hazardous Waste as defined by Colorado Hazardous Waste Regulations.	Characterization of wipes (corrosivity and U-listed), solvent carryover metals, and glovebox (decommissioned) material characterization.	11/09/89
C094A	DOE RFO Contact Record to Ken Niswonger of Colorado Department of Health. "Confirm regulatory interpretation that listed waste codes on lab samples do not carry over to the waste generated from the analysis of the sample."	Lab waste characterization. Not listed if analyzing listed samples.	09/09/94
C095A	Internal memorandum to L. C. Baaso. "Leaded Glovebox Gloves."	TCLP results and conclusions for lead in leaded gloves.	06/09/93
C096A	External Letter to J. L. Long. "Identification and Thermal Studies of the Residue from Nitric Acid Reaction with Leaded Neoprene Gloves."	Results of a study of the reaction of nitric acid with Neoprene leaded gloves.	03/30/73
C097A	External Letter to Michael S. Karol of DOE Rocky Flats Office. Discussion re. Reclassification of certain waste streams formerly classified as subject to Land Disposal Restrictions.	Reassessment of Rocky Flats "carryover" characterization policy for insulation, metal, and filter waste.	08/11/93
C098A	Memorandum to File. "Justification for not including DCHP in Building 371."	Justification for not including DCHP in Building 371.	06/07/96
C099A	Memorandum to File. "Discrepancy with Washing of Leaded Gloves and Aprons."	Washing of acid-contaminated leaded gloves prior to 1974.	06/13/96
C100A	Telecon with Al Morgan of SafeSites of Colorado. "Washing of Leaded Gloves."	Washing of acid-contaminated leaded gloves prior to 1974.	06/13/96
C101A	Memorandum to File. "Characterization of Lead Containing Waste (IDCs 320 and 339)."	Resolution of characterization discrepancies with IDCs 320 and 339. Differences in assignment of EPA codes were identified in AK source documents P052A, U003A, P083A, and C093A.	06/17/96
C102A	Letter (Colorado Department of Health) to Michael S. Karol (DOE/Rocky Flats).	Characterization of Insulation, filter, and metal waste relating to solvent carry-over.	08/11/93
C103A	Telecon with Al Morgan of SafeSites of Colorado. "Creation of Filter IDCs."	Creation dates for IDCs 328, 331, 335, 342, 490, 492, 491, 338, and 376.	06/06/96
C104A	Telecon with Jack Weaver of SafeSites of Colorado. "CWS Filters."	CWS Filters.	06/18/96

Ref	Title/Description	Summary	Date
C105A	Interview Record of John Milner, Jr. *Held at DOE-ID for FOIA/PA review.*	Historical information on filter testing and contamination.	08/20/91
C106A	Telecon with Al Morgan of SafeSites of Colorado. "CWS Filters."	Packaging of CWS filter waste.	06/18/96
C107A	Memorandum to file. "Filters and Insulation Waste Characterization."	Resolution of characterization discrepancies. Differences in assignment of EPA codes were identified in AK source documents P016A, P052A, P037A, P049A, and P037A.	06/21/96
C108A	Letter to R. E. Yoder. "Tritium Balance for Buildings 771 and 774 Processing."	Description of tritium disposition at Rocky Flats.	08/06/76
C109A	Letter to W. C. Bright, Rocky Flats. "Emission of Carbon Tetrachloride Vapor from Building 774."	Questions the hazardous characteristic of discharged carbon tetrachloride vapor.	02/05/71
C110A	Personnel interview of Dick Del Pizzo. *Held at DOE-ID for FOIA/PA review.*		01/21/92
C111A	Letter to Peg Beatty, Weston.	Soil Samples.	01/03/90
C112A	Letter to Cal Ozaki.	Analytical results for Buildings 374 and 774 sludge wastes.	05/06/88
C113A	Interoffice Correspondence to S. A. Anderson. "Evaluation of Analytical Data for By-pass Sludge Sampled May 1990."	Evaluation of analytical data for by-pass sludge sampled May 1990.	10/03/90
C114A	Memorandum to File. "Historical Use of IDC 807."	Discussion of IDC 807 that was used for cemented incinerator sludge and for solidified bypass sludge. Differences in IDC 807 description were identified in AK source documents P064A, C010A, C063A, P043A, P063A, P067A, P052A.	07/18/96
C115A	Telecon with Bill Connor of Kaiser-Hill LATO. "Generation of Americium Process Residue (IDC 241)."	Creation and processing of IDC 241.	07/29/96
C116A	Memorandum to file. "Resolution of Incinerator Waste Characterization Discrepancy."	Clarification of EPA codes for incinerator waste. Differences in application of EPA codes were identified in AK source documents P049A, U046A, and P052A.	08/02/96
C117A	Miscellaneous Correspondence and Draft Correspondence about Pyrochemical Salts. *UCNI document held by DOE-ID.*	Correspondence relating to the D003 and D007 characterization of pyrochemical salts.	1993-1995
C118A	Telecon with Bill Connor of Kaiser-Hill LATO. "R&D Activities Generating Sand, Slag, and Crucible (SS&C) Wastes (IDCs 391 and 393)."	Creation and processing of IDCs 391 and 393.	08/13/96
C119A	Discrepancy Report. "Evolution of the Characterization of Pyrochemical Salts and SS&C."	Discussion of the evolution of the pyrochemical salt and SS&C waste characterization, including D002, D003,and D007 determinations. Differences in application of EPA codes were identified in AK source documents C117A, P139A, and U062A.	08/14/96
C120A	Telecon with Bill Connor of Kaiser-Hill LATO. "Grit Blasting in Building 771."	Information about grit blasting process in Building 771.	08/15/96
C121A	Telecon with Carrie Wesley, RMRS. "Information on Building 374 Aqueous Waste Treatment."	Information about liquid waste treatment operations.	09/12/96

Ref	Title/Description	Summary	Date
C122A	Memorandum to A. M. Faucette, SafeSites. "Analysis of Cemented Bypass Sludge Samples for TCLP Extract Elements by ICP AES and GC/MS."	Building 374 Bypass Sludge analytical data.	09/12/95
C123A	Telecon with Bud Nannie, Rocky Flats Plant-retired. "Use of Carbon Tetrachloride and 1,1,1-Trichloroethane in Pyrochemical Operations."	Information about pyrochemical processing and solvents.	09/19/96
C124A	Interoffice Correspondence to Distribution. "Management of Spent Fluorescent Light Tubes." ALS-328-91.	Guidance for the hazardous waste management of fluorescent light bulbs.	10/08/94
C125A	Interoffice Correspondence. "Environmental Compliance Directive No. 1: Spent Incandescent Bulbs to be Collected for Recycling." JAH-009-95.	Management of incandescent light bulbs.	08/04/95
C126A	Battery Characterization. Attachment 8 – Mercury Batteries.	RCRA characterization and constituent information for mercury batteries.	11/12/96
C127A	Telecon with Ann Quinn. "Aggregate Feed Streams to Building 374 Treatment processes."	Corrosivity of Aggregate Feed Streams to Building 374 Treatment Process.	11/13/96
C128A	Telecon with Ann Quinn. "Permit Status and LDR Requirements for Building 374."	Permit status for Building 374.	11/13/96
C129A	Informal memorandum to Briand Wu and others. Evaluation of ITS Water and Recommended Discharge Options. ER-95-195.	Summary of ITS (Interceptor Trench System) water data from 1989 to 1995.	10/06/96
C130A	Fax to Jeff Paynter. Rock Flats Plutonium Isotopic Levels. *UCNI document held by DOE-ID.*	Plutonium isotopic levels at Rocky Flats for 1959 through 1974.	02/18/92
C131A	Telecon with Ann Quinn. "WSRIC Building Book 774 Upcoming Changes, Microwave Process (774-10)."	WSRIC Building Book 774-upcoming changes to process 10.	01/15/97
C132A	Telecon with Ann Quinn.	WSRIC Building Book 774 Upcoming changes for LDR Assessment.	01/13/97
C133A	Telecon with Jeff Harrison. "Mercury Contaminated Combustibles from Building 125."	Mercury Contaminated Combustibles from Building 125.	01/28/97
C134A	Interview Record and associated documentation of several former Rocky Flats employees. *Held at DOE-ID for FOIA/PA review.*	Interview with information about general Rocky Flats history.	Not dated
C136A	Interview Record of Joe Risinger. *Held at DOE-ID for FOIA/PA review.*	Interview with information about B776 electrorefining, B771 incinerators, and B444.	08/29/91
C137A	Interview Record of E. Putzier and E. Vejvoda. *Held at DOE-ID for FOIA/PA review.*	Interview with information about historical process changes, historical air/water effluent monitoring and waste disposal practice, and plutonium types and usage.	09/05/91
C138A	Interview Record of Joe Aldrich. *Held at DOE-ID for FOIA/PA review.*	Interview with information about historical process changes to B887, B881, and B444.	08/22/91
C139A	Interview Record of C. Barrick. *Held at DOE-ID for FOIA/PA review.*	Interview with information about sensitivity of Th233 information.	12/14/90

Ref	Title/Description	Summary	Date
C140A	Interview Record of N. Clark. *Held at DOE-ID for FOIA/PA review.*	Interview with information about historical process changes to B883 and relationship to changes in quantity of chemicals used in B883.	12/13/91
C141A	Interview Record of L. R. Crisler. *Held at DOE-ID for FOIA/PA review.*	Interview with information about B771 operations and chemicals used, with references to historical documents written by L. R. Crisler.	08/27/91
C142A	Interview Record of N. Cypher. *Held at DOE-ID for FOIA/PA review.*	Interview with information about B774 evaporator, B883 classified project, chemicals in B374, incidents in B374 and B866.	08/13/91
C143A	Interview Record of R. Greinetz. *Held at DOE-ID for FOIA/PA review.*	Interview of Ph.D. chemist who worked at Rocky Flats.	01/17/92
C145A	Interview Record D. Del Pizzo. *Held at DOE-ID for FOIA/PA review.*	Interview with information about U233 use at Rocky Flats and the ZPPR project.	01/21/92
C146A	Interview Record of S. DeWitt. *Held at DOE-ID for FOIA/PA review.*	Interview with information about B771; structural.	08/15/91
C147A	Interview Record of V. Dingman. *Held at DOE-ID for FOIA/PA review.*	Interview with information about B777 and B707 chemicals, uranium processing.	08/14/91
C148A	Interview Record of J. Dorr. *Held at DOE-ID for FOIA/PA review.*	Interview with information about ZPPR Project and coating studies.	01/22/92
C149A	Interview Record of M. W. Beranek. *Held at DOE-ID for FOIA/PA review.*	Interview with information about B771 Am Processing, filter system, and incinerator.	08/07/91
C150A	Interview Record of C. Forrey. *Held at DOE-ID for FOIA/PA review.*	Interview with information about B771 fume scrubber, cooling tower, filter plenum, and caustic scrubber.	08/23/91
C151A	Interview Record of J. Hebert. *Held at DOE-ID for FOIA/PA review.*	Interview with information about B771 Pu metallurgy and fluorinator, the B447 chip roaster, and B460 waste from B881.	08/06/91
C152A	Interview Record of F. McMenus. *Held at DOE-ID for FOIA/PA review.*	Interview with information about waste transfer system, cleanup of solar ponds, OASIS, B774 vacuum filter, B771 incinerator, and B374 holding ponds.	08/07/91
C154A	Interview Record of W. V. Conner. *Held at DOE-ID for FOIA/PA review.*	Interview with information about several B771 operations, Am purification, Np work, chemicals used, and fume scrubber.	08/13/91
C155A	Interview Record of J. D. Weaver. *Held at DOE-ID for FOIA/PA review.*	Interview with information about B771 operations, including dissolution process, leached Pu, and ammonium thiocyanate process, and B371 construction and operation.	08/15/91
C156A	Interview Record of R. Jackson. *Held at DOE-ID for FOIA/PA review.*	Interview with information about B883 production.	08/13/91
C157A	Interview Record of R. Gisler. *Held at DOE-ID for FOIA/PA review.*	Interview with information about Room 114, B771 and chemicals used.	08/20/91
C158A	Interview Record of R. Simmons. *Held at DOE-ID for FOIA/PA review.*	Interview with information about health physics, some beryllium.	11/21/91
C159A	Record of Conversation of Rod Hoffman. *Held at DOE-ID for FOIA/PA review.*	Special isotope information.	09/04/91
C160A	Interview Record of M. Delhierro. *Held at DOE-ID for FOIA/PA review.*	Interview with information about pyrochemistry in B371.	08/13/91

Ref	Title/Description	Summary	Date
C161A	Interview Record of K. Freiberg. *Held at DOE-ID for FOIA/PA review.*	Interview with information about Th^{233} and Cu^{244}.	05/09/91
C162A	Interview Record of R. Hilbig. *Held at DOE-ID for FOIA/PA review.*	Interview with information about Freon in B460, composition of nitrad, and some solvents and chemicals used at Rocky Flats.	08/13/91
C163A	Interview Record of G. Ideker. *Held at DOE-ID for FOIA/PA review.*	Interview with information about B881 stainless steel operations and B460 operations.	08/14/91
C164A	Interview Record of B. Kelchner. *Held at DOE-ID for FOIA/PA review.*	Interview with information about U operations and chemicals used in B881.	09/06/91
C165A	Interview Record of L. Martella. *Held at DOE-ID for FOIA/PA review.*	Interview with information about Np, Am recovery, and U "special recovery."	08/07/91
C166A	Interview Record of L. Martella. *Held at DOE-ID for FOIA/PA review.*	Interview with information about Np, and Am recovery.	08/07/91
C167A	Interview of Record of J. Merriman. *Held at DOE-ID for FOIA/PA review.*	Interview with information about B559 ventilation upgrade and radionuclide emissions.	08/20/91
C168A	Interview Record of J. D. Morrison. *Held at DOE-ID for FOIA/PA review.*	Interview with information about B771 and B774 Ops, a little bit about ZPPR, and chemical list attached.	08/29/91
C169A	Telecon with Jeff Harrison. "Information Regarding Drum Prefix Usage and Plutonium Isotopic Composition."	Drum prefix assignments to MBAs and plutonium isotopic composition.	01/09/97
C170A	Telecon with Jeff Harrison. "Information Regarding Drum Prefix Usage."	Information regarding drum prefix usage prior to WEMS.	02/17/97
C171A	Telecon with Jeff Harrison. "Nonroutine Radionuclide Work."	Nonroutine radionuclide work.	02/13/97
C172A	Interoffice correspondence with J. R. Ryan of RFETS.	Review of data for tar; the interpretation of the data is incorrect.	05/10/94
C173A	Telecon with Jeff Harrison. "Graphite from Prefix 0743."	Graphite from drum prefix 0743. See follow-up interview – AK source document C177A.	02/28/97
C174A	Telecon with Jeff Harrison. *Held at DOE-ID as "Possibly UCNI."*	Building 707 Operations.	02/28/97
C175A	Telecon with Al Morgan of Rocky Flats (retired). "Building 776 Size Reduction Area."	Building 776 Size Reduction Area prefixes and MBAs.	02/27/97
C176A	Telecon with Bill Connor of Kaiser-Hill LATO. "Nonroutine and R&D Operations."	Nonroutine and R&D Operations.	02/27/97
C177A	Telecon with Al Morgan of Rocky Flats (retired). "Graphite Scarfing."	Graphite scarfing. Includes explanation for graphite drums assigned prefix 0743.	02/26/97
C178A	Interoffice Memorandum to A. J. Holifield of Safe Sites. AMM-002-96.	Review of six item description codes with respect to potential water content. Attachment 1 to AMM-014-96 (AK source document C179A).	01/10/96
C179A	Interoffice Memorandum to R. E. Wilson. AMM-014-96.	Moisture content in pyrochemical salt residues with respect to considering them "wet" by nuclear material safety limits.	03/19/96
C180A	Informal Memorandum to J. M. Ball of SSOC. WVC-96-6.	Moisture content of non-salt residue IDCs.	03/20/96
C181A	Informal Memorandum to J. M. Ball of SSOC. WVC-96-7.	Moisture content of all non-salt residue IDCs.	04/04/96

Ref	Title/Description	Summary	Date
C182A	Interoffice Correspondence to K. A. Phillips. AMM-019-96. *Held at DOE-ID as "Possibly UCNI."*	Information regarding item description code (IDC) 416.	04/16/96
C183A	Telecon between Mike West of LATO, Lynn McCurry of WI (ORNL), and Kevin Peters. *Held at DOE-ID as "Possibly UCNI."*	Composition of MSE Salt, IDC 409 (drawing attached).	03/11/97
C184A	Interview Record of Al Morgan. *Held at DOE-ID as "Possibly UCNI."*	Historical Rocky Flats Operations with emphasis on radionuclides.	03/19/97
C185A	Telecon with Bill Connor of LAPO. "Special Isotopes used in R&D Operations."	Special isotopes used in R&D Operations.	03/20/97
C186A	Interoffice Correspondence to J. Ball, SSOC.	Interim Residue Characterization Status Report KAP-017-96. Follow-on report to KAP-012-96 (AK source document C187A).	12/31/96
C187A	Interoffice Correspondence to J. Ball, SSOC.	Interim Residue Characterization Status Report KAP-012-96. A follow-on report was made under KAP-017-96 (AK source document C186A).	07/22/96
C188A	Telecon with Bill Conner of LAPO. "Defense Versus Non-Defense Related Projects."	Identifies Rocky Flats projects that were defense and non-defense related.	04/03/97
C189A	Telecon with Al Morgan of Rocky Flats (retired). "Americium Recovery and Purification."	Building 771 Americium Recovery and Purification process and waste outputs.	04/03/97
C190A	Telecon with Bill Conner of Rocky Flats. "Defense Versus Non-Defense Related Projects."	Defense and non-defense activities performed at Rocky Flats for other sites/contractors.	05/20/97
C191A	Memorandum to J. M. Roberson, RFFO and J. M. Wilcynski, INEEL. "Identification of Defense Waste Streams Generated at Rocky Flats Environmental Technology Site (RFETS)."	Identifies defense waste streams at RFETS. States that the wastes were not associated with nuclear fuels or high-level waste.	05/20/97
C192A	Letter to Albert E. Whiteman, Area Manager DOE, RFAO. "Classified Waste Characterization." 88-RF-0409.	List of classified waste IDCs that are RCRA hazardous waste.	02/10/88
C193A	Facsimile Memorandum to Jeff Harrison. "Info on 1518-4 Containers."	Unclassified description for retired weapons components stored at Nevada Test Site.	07/10/97
C194A	Telecon with Jeff Paynter, M.H. Chew & Associates. "General Discussion of NTS Inventory of Rocky Flats Waste." *Held at DOE-ID as "Possibly UCNI."*	Descriptions of classified waste IDCs.	07/10/97
C195A	Telecon with Jeff Paynter, M.H. Chew & Associates. "Relation of Processes Generating Classified IDCs." *Held at DOE-ID as "Possibly UCNI."*	Description of how processes that generated classified waste IDCs are related.	07/17/97
C196A	Facsimile Transmission to Jeff Harrison, WASTREN. "Density of Sludge Drums."	Sludge density calculations for IDC 800 performed by Pat Arnold.	03/18/97
C197A	Memorandum to File.	Summary of drum prefix discrepancies for INEEL Accessible Storage TRU Waste Inventory-Rocky Flats Waste.	08/12/97

Ref	Title/Description	Summary	Date
C198A	E-mail note to Rodney Arbon, "Light Ballasts."	E-mail provides information about the potential of PCBs in fluorescent light ballasts. The assumptions used to determine whether or not PCBs are present in fluorescent light ballasts are presented. William Becker is a BBWI employee with an extensive background in TSCA.	04/19/00
C199A	External letter to Sheila Hailey. "Resolution of Magnesium Oxide Crucibles (IDC 368) Characterization Discrepancy." KJP/003/0501.	Resolution of conflicting characterization data for IDC 368. Assessment of documentation indicates waste is nonhazardous.	05/15/01
C200A	External letter to Sheila Hailey. "Cyanide Content of Solidified Aqueous Sludge – Bldg. 774." KJP/004/0501.	Discuss analytical data, documentation, and telecons supporting the determination that cyanide concentrations in Bldg. 774 solidified aqueous sludge are low and will not cause the waste to be reactive.	05/22/01
C201A	Interview of Gregg Park, BBWI. "Free Liquids in First/Second Stage Sludge Samples."	Based on past experience of Gregg Park, it describes the likelihood that First/Second Stage Sludge samples will pass a Paint Filter Liquids test.	05/22/01
C202A	Telecon/Interview between Carolyn Abbott and Rick Erdheim/Paul Krehl.	Potential hazards of lack of hazards due to the presence of lithium containing batteries in RFP First and Second Stage Sludge waste.	05/23/01
C203A	Telecon/Interview between Joan Connolly/Carolyn Abbott and Mason Harrup.	Potential hazardous or lack of hazards due to the presence of small amounts of cyanide from feed waste in the RFP First and Second Stage Sludge waste.	05/23/01
C204A	External letter to Sheila Hailey. "Reclassification of Certain Homogeneous Waste to Debris Waste." KJP/006/0501. *Held at DOE-ID as "Possibly UCNI."*	Identifies IDCs in the INEEL inventory that can be reclassified as debris waste based on the Waste Analysis Plan, Attachment B. IDCs were identified were: IDC 310, Graphite Scarfings and Fines; IDC 372, Grit; IDCs 432 & 822, Cemented Resin; IDC 370, LECO Crucibles; and IDCs 391 and 392, Unpulverized Sand, Slag, and Crucible.	05/25/01
C205A	External letter to Sheila Hailey. "Resolution of Grit (IDC 372) Characterization Discrepancy." KJP/009/0601.	Resolution of conflicting characterization data for IDC 372. Assessment of documentation indicates waste should be conservatively assigned D007 (chromium).	06/22/01
C206A	Telecon between Betty Tolman and Kevin Peters/Jeff Paynter. "Beryllium Scrap in IDC 480 Waste Drum." *Held at DOE-ID as "Possibly UCNI."*	Discusses the expectation of finding scrap beryllium in the IDC 480 waste stream.	10/02/01
C207A	Summary of PCB AK Sources. WASTREN, Inc.	Compilation of correspondence and other documentation concerning historical management of PCB liquids and items at Rocky Flats Plant. Cut-off date for PCB-contaminated waste cannot be firmly established and supported using this documentation.	Reviewed 9/5/01
C208A	External letter and Paper to Brian R. Monson, Idaho Department of Environmental Quality. "Response to New Mexico Environmental Concern with IDC 002."	Paper discusses the potential presence of lithium batteries in the second stage sludge waste stream (IDC 002) generated at the Rocky Flats Plant, and the applicability of HWN D003 or D001 to the waste. The paper was prepared in response to State of New Mexico concerns relative to the consistency of characterization of lithium battery-containing waste between general INEEL practices and the TRU Waste Characterization program.	09/27/01

Ref	Title/Description	Summary	Date
C210A	INEEL Internal memorandum to Sheila Hailey. "MDC for Item Description Code – 337."	Concludes that the nominal MDC (minimum detectable concentration) assigned to IDC 337 for radioassay can be the same as that for IDCs 330 and 336.	11/29/01
C211A	External letter to Jack Depperschmidt, DOE-ID. "Regarding the April 24, 1997, Position Paper on the Addition of Absorption Activities Exempt from Permitting and Interim Status Requirements (OPE-EP097-143) for the Idaho National Engineering and Environmental Laboratory."	Clarifies when addition of absorbent materials to waste drums is acceptable and exempt from permitting requirements.	06/25/97
C212A	External letter to Dave Wessman, DOE-ID. "Receipt of INEEL Response to New Mexico Environment Department, Concerns with IDC 002 at the Radioactive Waste Management Complex on the Idaho national Engineering Laboratory."	States that earlier letter and paper (C208A) to Idaho DEQ resolves concerns relative to lithium batteries in the IDC 002 waste stream.	10/29/01
C213A	Internal memorandum to Joan Connolly. "Dilutions of TWCP Semivolatile Organic Analysis Data."	Discussion of analyses of data packages 98004S, 98005S, 98012S, and 99001S, for IDCs 700 and 801.	01/07/02
C214A	External Letter to Lisa Frost. "PCB Label Research for NCR Number 26503."	Concludes that the filters waste stream drums do not contain PCB-contaminated wastes.	03/04/02
C215A	External Memorandum. "Approval of Idaho National Engineering and Environmental Laboratory Waste Stream Profile INW243.001."	Formal DOE approval of the Waste Stream Profile Form for the glass waste stream and authorization to enter waste stream data into WWIS.	03/28/01
C216A	External Memorandum. "Approval of Idaho National Engineering and Environmental Laboratory Waste Stream Profile INW169.001."	Formal DOE approval of the Waste Stream Profile Form for the combustibles waste stream and authorization to enter waste stream data into WWIS.	02/07/02
C217A	External Memorandum. "Approval of Idaho National Engineering and Environmental laboratory Waste Stream Profile INW198.001."	Formal DOE approval of the Waste Stream Profile Form for the plastics waste stream and authorization to enter waste stream data into WWIS.	02/07/02
C218A	External Letter and attachments to C. C. Dwight, Argonne National Laboratory West. "Core Sample Plans for Miscellaneous Solidified Waste." SMH-07-97.	Approach to be used for core sampling miscellaneous RFP solidified wastes (IDCs 292, 432, 817, 818, 822, and 823) to meet FY-97 milestone.	03/06/97
C219A	Internal Memorandum to Chris Brooks. "Radioassay System Certification Capabilities Implementation Information for Organic Setups Item Description Code 003." WSR-01-01.	Notification that the Passive-Active Neutron (PAN) assay system TMU evaluation for the active mode was completed for IDC 003. Includes TMU result and certification restrictions and conditions.	10/23/01
C220A	Internal Memorandum to David Morgan. "Radioassay System Certification Capabilities Implementation for Miscellaneous Cemented Waste Item Description Codes 292, 432, 806, 817, 818, 820, 822, and 823." WSR-05-02.	Notification that the Passive-Active Neutron (PAN) assay system TMU evaluation for the active mode was completed for the subject IDCs. Includes TMU result and certification restrictions and conditions.	01/29/02
C221A	Internal Memorandum to David Morgan. "Radioassay System Certification Capabilities Implementation Information for Plastic Waste Description Code 337." WSR-01-02.	Notification that the Passive-Active Neutron (PAN) assay system TMU evaluation for the active mode was completed for IDC 337. Includes TMU result and certification restrictions and conditions.	01/29/02

Ref	Title/Description	Summary	Date
C222A	Internal Memorandum to David Morgan. "Radioassay System Certification Capabilities Implementation Information for Solidified Organics and Special Setups Waste Item Description Codes 004, 700, 801, 802." WSR-03-02.	Notification that the Passive-Active Neutron (PAN) assay system TMU evaluation for the active mode was completed for the subject IDCs. Includes TMU result and certification restrictions and conditions.	01/29/02
C223A	Interview/conference between BBWI and Physics Group. "Roadmap to Physics Databases." Includes Spectra data on CD and a subsequent e-mail from Cecilia Hoffman updating access locations to databases.	Provides pointers to the physics databases for post-2000 raw data, pre-2000 data, and TMU and MDC data from the Pan Gamma systems used for the INEEL 3,100 m^3 Project. The CD disc contains Spectra for confirmatory measurement reporting provided by the Physics group. "PCGAP" software is needed to open the Spectra/Excel files. PCGAP software is on the pc system in WMF 610 for the gamma NDA systems. The pc system location was provided to BNFL by Jim Pletscher.	04/08/02
C224A	Letter to File. "The D002 HWN is not Applicable to First and Second Stage Sludge (INW216.001) and Building 374 Sludge (INW218.001) Waste Drums that Contain Excess Free Liquid."	Conclusion that excess free liquids in the subject waste streams are not corrosive based on pH measurements.	04/19/02
C225A	External Memorandum. "Approval of INEEL Waste Stream Profile Form INW276.003."	Formal DOE approval of the Waste Stream Profile Form for the graphite (nonhazardous) waste stream and authorization to enter waste stream data into WWIS.	07/20/00
C226A	External Memorandum. "Approval of Idaho National Engineering and Environmental Laboratory (INEEL) Revised Waste Stream Profile Form INW276.004, Rev. 1."	Formal DOE approval of the revised Waste Stream Profile Form for the graphite (hazardous) waste stream and authorization to enter waste stream data into WWIS.	09/27/00
C227A	External Memorandum. "Approval of Idaho National Engineering and Environmental Laboratory (INEEL) Waste Stream Profile Forms INW247.001R1 and INW296.001, Rev. 1."	Formal DOE approval of the revised Waste Stream Profile Forms for Raschig Rings and Non-Special Source Metals waste streams and authorization to enter waste stream data into WWIS.	11/14/00
C228A	External Memorandum. "Approval of Idaho National Engineering and Environmental Laboratory (INEEL) Waste Stream Profile Form INW211.001."	Formal DOE approval of the Waste Stream Profile Form for the Filters waste stream and authorization to enter waste stream data into WWIS.	04/24/01
C229A	External Memorandum. "Approval of Idaho National Engineering and Environmental Laboratory (INEEL) Waste Stream Profile Form INW211.001, Rev. 1."	Formal DOE approval of the revised Waste Stream Profile Form for the Filters waste stream and authorization to enter waste stream data into WWIS.	05/03/01
C230A	External Memorandum. "Approval of Idaho National Engineering and Environmental Laboratory (INEEL) Waste Stream Profile Form INW216.001."	Formal DOE approval of the Waste Stream Profile Form for the First and Second Stage Sludges waste stream and authorization to enter waste stream data into WWIS.	05/24/01
C231A	External Memorandum. "Approval of Idaho National Engineering and Environmental Laboratory (INEEL) Waste Stream Profile Form INW218.001."	Formal DOE approval of the Waste Stream Profile Form for the Building 374 Sludges waste stream and authorization to enter waste stream data into WWIS.	07/24/01
C232A	External Memorandum. "Approval of Idaho National Engineering and Environmental Laboratory (INEEL) Waste Stream Profile Form INW169.001."	Formal DOE approval of the Waste Stream Profile Form for the Combustibles waste stream and authorization to enter waste stream data into WWIS.	02/07/02

Ref	Title/Description	Summary	Date
C233A	External Memorandum. "Approval of Idaho National Engineering and Environmental Laboratory (INEEL) Waste Stream Profile Form INW198.001."	Formal DOE approval of the Waste Stream Profile Form for the Plastics waste stream and authorization to enter waste stream data into WWIS.	02/07/02
C234A	External Memorandum. "Approval of Idaho National Engineering and Environmental Laboratory (INEEL) Waste Stream Profile Form INW222.001."	Formal DOE approval of the Waste Stream Profile Form for the Miscellaneous Cemented Sludges waste stream and authorization to enter waste stream data into WWIS.	04/24/02
C235A	Letter to File: Assignment of unique IDC (696) to IDC 807b waste containers.	A unique IDC number has been assigned to IDC 807 Rocky Flats incinerator sludge in TRIPS specifically to distinguish the waste from IDC 807 Building 374 Sludge and to identify the containers for the NDA SAS and SAP systems. Includes superseded letter to file dated June 11, 2002.	07/12/02
C236A	Letter to File. "Rocky Flats Waste Streams with 'split' IDCs."	A decision made during the 3,100 m^3 Project that IDC 320 would not be segregated into two waste streams based on the presence or absence of lead in the waste container. All IDC 320 containers in the Rocky Flats inventory were assigned HWN D008 and a single WMC (S5112).	06/11/02
C237A	Fax of Telecon between Jeff Harrison, WASTREN, and Jan Fretthold, Rocky Mountain Remediation Services. "HEPA Filter Frame Material."	Clarifies that 804A and B plenums in Building 374 were the only processes to use metal (14 gage, Type 304 stainless steel or chromized carbon steel) frames. HEPA filters used on gloveboxes had wood frames only.	04/08/99
C238A	Letter to file. "Calculating and reporting the net waste weight in standard waste boxes to WIPP."	States that INEEL will consider drums and poly liners in SWBs as packaging and not part of the waste matrix.	05/20/02
C239A	Fax of Memorandum to Warren Bergholz, DOE-ID. "Annual Re-evaluation of INEEL TRU Waste Program Compliance."	Documents the successful recertification of the INEEL TRU waste program based on completion of the July 30 – August 3, 2001 recertification audit and the audit of the INEEL NDA systems conducted April 9-11, 2002. Includes approval to ship organic homogeneous solids and the list of certified procedures, documents, and systems to be used by INEEL.	05/30/02
C240A	Correspondence and other documentation related to the disposition of tantalum targets and subtargets at the Rocky Flats Plant.	This reference includes a variety of documents related to the disposition of tantalum targets and subtargets at RFETS. Documented in the reference are the handling and disposition of the targets following use and a determination that no classified tantalum targets were sent to the INEEL for storage as part of IDC 320.	March 1974 – September 2001
C241A	Telecon between Carolyn Abbott, North Wind, and Jeff Harrison, WASTREN. "Material in IDC 376 Drum."	Describes and discusses cartridge type filter previously unidentified by AK discovered during visual examination in IDC 376 waste.	07/18/02

Ref	Title/Description	Summary	Date
C242A	Letter to L. S. Sygitowicz. "Solidified Waste Residual Liquid De-watering Investigation at the Idaho National Engineering and Environmental Laboratory." CCN 22123.	Addresses the potential de-watering of solidified wastes (IDCs 001, 002, 007, 800, 803, 807) at the INEEL. Summarizes the investigation by INEEL (3,100 m^3 Project). Concludes that the INEEL container certification process is WAP compliant in the identification and segregation of homogeneous solid waste drums containing excess residual liquids. The miscertification rate indicates compliance with the WAP requirements. Excess residual liquids are not expected to generate during transport to the WIPP facility.	05/30/01
C243A	Letter to S. M. Edgett. "Update of RTR Miscertification Rate Due to Excess Free Liquids." JJE-10-2002.	Update to C242. Summarizes the observed miscertification rate for the period between the issuance of Revision 5 of the WIPP-WAC and August 19, 2002. Calculates a cumulative point estimate miscertification rate (due to excess free liquid) of 1.4% with an upper 90% confidence limit of 1.7% easily meeting the relevant WAP criterion (true miscertification less than 14% with 90% confidence).	08/19/02
C244A	Memorandum to T. H. Monk. "CAR 02-078, Investigative Action 2." TFF-005-02.	Investigation of RTR versus confirmatory visual data for prior miscertifications due to excess free liquids in homogenous solids drums. Pursuant to CAR-02-078, Investigative Action 2 (3,100 m^3 Project).	08/28/02
C245A	Rocky Flats Internal Letter to Distribution. "Hazardous Constituents of Rocky Flats Waste." WCP02-31.	This is an internal memo transmitting tables of Rocky Flats waste. These tables identify the hazardous constituents in the waste by IDC and Hazardous Waste Number.	05/23/89
C246A	Telecon between Rick Chavez, Westinghouse TRU Solutions, Dr. K. Gilbert, BBWI, and Joan Connolly, North Wind, et.al. "Leaded Rubber Gloves and Aprons WSPF and New Target Analyte, Methyl Chloride."	Discussion of Leaded Rubber Gloves and Aprons WSPF and the new target analyte, methyl chloride. Also discussed updates to the operating record for minor changes such as TRUCON codes.	08/26/02
C247A	Telecon between Jeff Harrison, WASTREN, and Charles Marcinkiewicz, North Wind. "Leaded Rubber and Possible D006 and D007 HWNS."	Summarizes a discussion about the rationale for assigning D006 and D007 to Leaded Rubber Gloves and Aprons wastes from Building 774, And possible need to assign these HWNs to INEEL waste stream INW252.001. Since the process generating the relevant wastes was initiated after the last wastes were sent to INEEL, assignment of D006 and D007 is not appropriate.	09/24/02

Ref	Title/Description	Summary	Date
C249A	Internal Correspondence from J. A. Nesheim to F. M. Durel. "Classification Review Exemption – CLW-180-93." November 18, 1993. External letter to J.M. Schoen, RMRS, from J.A. Nesheim, Worldwide Security Services. "Classification Review Exemption CEX-061-96 for WSRIC Data." November 21, 1996. External letter to J.M. Schoen, RMRS, from J.A. Nesheim, Worldwide Security Services. "Electronic WSRIC Classification and UCNI Review Exemption (JAN-108-01) WSS-C0-01-0786." December 4, 2001. WSRIC Electronic Database, Version 3.2, on CD. *Building Books 707, 771, 774, and 777 (on CD): UCNI documents held by DOE-ID.*	Letters regarding UCNI exemption for the Waste Stream and Residue Identification and Characterization (WSRIC) documentation. WSRIC Building Books, Version 3.2, are included with this reference on CD. Some of the Building Books (707, 771, 774, 777) were determined to be UCNI, and were not released to BNFL. A CD containing the Building Books determined to be UCNI are held at DOE-ID Records Management. The remaining Building Books (371, 374, 559, 776, 779, and 881) are provided on the CD included in this record.	11/18/93
C250A	Interoffice Memorandums to T. H. Monk transmitting the Acceptable Knowledge Accuracy Assessments for First Quarter FY–2000, dated November 29, 2000 and Third Quarter FY–2001 dated July 19, 2001; and from L. Frost to T. H. Monk for FY–2002, Rev. 1, dated August 8, 2002, and to M. Sherick for Final FY–2002 assessment dated January 14, 2003.	Accuracy assessments of WMC, HWN and radioisotope assignments based on acceptable knowledge by fiscal year for the 3,100 m^3 Project.	01/01/03
C253A	Internal correspondence to A.A. Church, EG&G Rocky Flats, Inc. "Status of TCLP Analysis on Leaded Gloves and Leaded Glovebox Windows." 168-WG-91.	Analytical data for leachable metals in leaded gloves and leaded glass windows.	03/13/91
C264A	Acceptable Knowledge Resolution Checklist, AK-03-001.	Assessment of discrepancies between statistical evaluations of HSG data assuming normal distribution compared to transformation. It was determined for HSG data from RFP waste streams as presented in the attached tables, that statistical evaluation of the data assuming normal distribution (without transformation) resulted in more conservative assignment of EPA HWNS than if transformations to normality are used.	01/01/03
C267A	Letter to AK Record and supporting documentation. "Review of Historical Rocky Flats Waste Shipment Records."	Concludes that container-specific information for waste shipped to RWMC from November 1970 to June 1971 could not be located in RFETS records. See U120A, which indicates that container-specific data is not available in the INEEL TWMIS database for shipments made during this time period. Identifies content codes (IDCs) for paper & rags (10), wood & benelex (20), plastic (30), rubber (40), metal scrap (50), glass (60), graphite (70), and equipment (80), that were apparently discontinued and replaced by Rocky Flats in June 1971. These content codes do not appear in the TWMIS database (P120A), but could possibly be assigned to the November 1970 to June 1971 containers for which container-specific information is not available.	01/31/03
C268A	Interoffice Memorandum and supporting data to J.H. Pletscher, INEEL. "BNFL-RFI 2003-13 Special Trips Query, April 14, 2003."	Describes the process used by INEEL to test drums for flammability by preprocessing VOC data in TRIPS and using the alternative method (Alt Meth) module in e-TRAMPAC.	04/28/03

Ref	Title/Description	Summary	Date
C270A	Memorandum to AK Record, "Confirmatory Testing performed by Bechtel BWXT, Inc. on Containers remaining in AMWTP Inventory."	Roadmap to RTR, NDA, and HSG analytical data obtained by Bechtel during confirmatory testing of drums for the 3,100 m^3 project. Also includes solid sampling data for First/Second Stage Sludge. This reference will be used as a resource as needed. Summary level data have already been incorporated into Revision 3 of the *Acceptable Knowledge Document for INEEL Stored Transuranic Waste – Rocky Flats Plant Waste.*	08/20/03
C271A	Memorandum to Gina Tedford, "Cs^{137} and Sr^{90} in Rocky Flats-generated Waste." BJT-01-2003.	Notification to the AMWTP Waste Certification Official that data inputs to WWIS for activity and mass of Cs^{137} and Sr^{90} will be reported as <LLD when Cs^{137} and Sr^{90} are not detected. This directive complies with requirements of the Waste Acceptance Criteria (WAC).	09/04/03
C272A	Memorandum to Eric Schweinsberg, "Documentation of Plastic Round Bottom Liner – C272A."	Documentation on plastic round bottom liner. Includes photographs and description of liner based on visual inspection conducted by AMWTP.	03/10/04
C273A	Interview with Vince Medina. Packaging/Waste Configuration for First Stage Sludge.	Describes an inner packaging configuration for IDC 001 waste (prefix 0741) not previously identified.	03/15/04
C275A	Letter from New Mexico Environment Department, Hazardous Waste Bureau, RE: NMED Approval of the AMWTP Final Audit Report, Audit A-03-05, to Ines Triay, Manager CBFO and Steven Warren Pres. Washington TRU Solutions LLC. December 23, 2003.	Letter from NMED to CBFO, approving the Final Audit Report for AMWTP Audit A-03-05 for the certification of retrievably stored homogenous solids CH waste. Approval for BNINW216 (First/Second Stage Sludge) is limited to Lot 1 containers only. Lot 2 containers are not approved based on NMED's interpretation of Permit Attachment B2, Section B2-2a, "that random selection and sampling of the waste containers from Lot 2 has not been achieved".	12/23/03
C277A	DOE CBFO Memorandum. Authority Granted to INEEL AMWTP for Characterization and Certification of Contact Handled Homogenous Solids Transuranic Waste. To Elizabeth Sellers, DOE-ID Manager. March 9, 2004.	Based on the results of Audit A-03-05, the CBFO granted authority for characterization, certification and transportation of S3000, first and second stage sludge, BNINW216. The authority is limited as follows: Preliminary solids sampling and analysis data from the 3100 m3 project may only be used for Lot 1. Attachment 4 provides the list of containers in Lot 1. Solids sampling and analysis must be conducted to confirm AK for subsequent lots. Prior approval must be obtained from CBFO before applying preliminary solids sampling and analysis data to later lots.	03/09/04
C280A	EG&G Idaho Interoffice Correspondence. Assessment of weight of lead in drums processed by SWEPP – TLC-7-86. T.L. Clements, Jr. to L.A. Cook.	Presents a technique for estimating the amount of lead in drums containing glovebox gloves and lead aprons. A calculation is also discussed for estimating the amount of lead in a lead lined drum, assuming the thickness of lead can be estimated. This documentation is used by AMWTP to establish the waste material parameters for leaded rubber gloves and aprons.	01/22/86
C281A	Letter to Joseph A. Legare, "Revision 2 For Resolution of Cesium-137 (Cs-137) Acceptable Knowledge (AK) Discrepancy Between Rocky Flats Environmental Technology Site (Site) and Idaho National Engineering and Environmental Laboratory (INEEL)." JAC-023-04.	This source document records the resolution between RFETS and AWMTP with regard to the presence of Cs-137 and Sr-90 in Rocky Flats wastes processed through the AMWTP. The resolution concludes that Cs-137 and Sr-90 is expected to be present only in RF-IDC 004 and RF-IDC 480 wastes based on the analysis of spectral data and on AK.	12/27/04

Ref	Title/Description	Summary	Date
C282A	Memorandum to Assay Independent Technical Reviewers, "Be Contaminated Waste." SPC-001-2005.	Guidance regarding Rocky Flats beryllium-contaminated waste. Expectation that beryllium is greater than one weight percent in RF-IDC 800 (First/Second Stage Sludge), and limiting fissile gram equivalent to 100 FGE per payload container and package.	01/13/05
C283A	Correspondence between Don Pound and M.L. Caviness regarding Content Code Addition for Beryllium-contaminated Waste.	Documentation adding new content codes for solidified aqueous waste/sludge waste contaminated with beryllium greater than one weight percent.	01/12/05
C285A	Letter to Kerry Watson, "Acceptable Knowledge Revision (AKR) for Cesium-137 and Strontium-90." EPS-085-2004.	Itemization of changes that will be made to AMWTP documentation to remove references to the presence Cesium-137 and Strontium-90 in Rocky Flats-generated wastes, other than RF-IDCs 004 and 480.	12/21/04
C286A	Memorandum to Eric Schweinsberg, "Acceptable Knowledge Revision of Cesium-137 and Strontium-90." MC-001-2005.	Assessment of NDA reporting of Cs-137 and Sr-90 in RF wastes, particularly for waste streams BNINW216 (First/Second Stage Sludge) and BNINW218 (Building 374 Sludge). Path forward for reviewing/annotating radioassay data that reports Cs-137 and computed Sr-90 in RF wastes not expected by AK to support the presence of Cs-137.	02/09/05
C288A	Memorandum to Elvin Dumas, "Sampling Plan for BNINW216 – Lot 3." EPS-081-2004.	Sampling plan and Form-1196 container inventory list for WSPF BNINW216 Coring Lot 3. Includes containers randomly selected for sampling and analysis of coring sample results.	11/17/04
C289A	Memorandum to file, "Boxes of Rocky Flats Waste to be included in the Supercompacted Debris Waste (BN510)."	This memo to file addresses the boxed waste from Rocky Flats Plant. Although boxed waste was listed in revision 2 of the RFO AK summary document, it was not discussed in either revision 2 or 3. The memo lists the quantity of boxed waste by type, the types of boxes, and quantity of waste by IDC. Also IDCs that were not included in the site AK are defined (IDCs 488, 491, 831, 832, 833, 33A, 33B, 44A, and 48A). An error in the TRIPS database for generation dates for RFP wastes is also corrected.	03/17/05; 04/13/05
C293A	Memorandum to file, "Two IDCs (460 and 463) of Rocky Flats waste are not included the RFP AK baseline documentation."	This memo to file addresses the IDCs 460, Washables, Rubber, Plastics, and 463, Drybox Gloves, not included in the RFP AK baseline document. The IDCs were generated by similar processes as other debris with similar names. The IDCs are included in BN510, Supercompacted Debris.	03/17/05
C294A	Interview Record of Eric D'Amico. "Interview Regarding Debris IDCs 488, 491, 831, 832, 833 Packaged into Metal Boxes at RFETS and Received at the INL Oct. 1970 Through 1988. Interview Regarding Debris IDCs 460 and 463 Packaged into Drums at RFETS And Received at the INL from Oct. 1970 Through 1988."	Interview concerning subject IDCs indicating that waste was generated in plutonium buildings at RFETS. Combustibles were collected in 55-gallon drums and repackaged into standard-sized waste boxes to increase packaging efficiency. D'Amico familiar with 4'x4'x7' metal boxes. Indicates that isotopic ratio should be the same.	03/15/05

Ref	Title/Description	Summary	Date
C295A	Interview Record of Pat Arnold. "Interview Regarding Debris IDCs 488, 491, 831, 832, 833 Packaged into Metal Boxes at RFETS and Received at the INL Oct. 1970 Through 1988. Interview Regarding Debris IDCs 460 and 463 Packaged into Drums at RFETS And Received at the INL from Oct. 1970 Through 1988."	Interview concerning subject IDCs indicating that waste was generated in plutonium buildings at RFETS. Combustibles and pre-filters were collected in 55-gallon drums and repackaged into standard-sized waste boxes to reduce waste void space while shipping or storing drums. IDC 488 was size reduced to fit into boxes. Interview indicates that drummed waste should be approximately the same waste as boxed waste except with higher plutonium gram values. Interview indicates that metal boxes were used beginning in the mid-1980s. Prior to that fiberglass reinforced wooden boxes of the same size (4'x4'x7') were used. Indicates that isotopic ratio should be the same.	03/17/05
C296A	Interview Record of Carl Trump. "Interview Regarding Debris IDCs 488, 491, 831, 832, 833 Packaged into Metal Boxes at RFETS and Received at the INL Oct. 1970 Through 1988. Interview Regarding Debris IDCs 460 and 463 Packaged into Drums at RFETS And Received at the INL from Oct. 1970 Through 1988." Clarification provided by Carl Trump, April 13, 2005.	Interview Record of Carl Trump. Combustible IDCs were generated starting the 1980s as drummed waste. IDCs 831, 832, 833, 488, 491were repackaged from drums into boxes for shipment to Idaho. Railcar shipments of boxes more efficient than drums. No knowledge of IDCs 460 and 463.	04/13/05
C299A	Correspondence between Kevin J. Peters and Rajib Bhatt regarding Assessment of TRU Waste Box Inventory.	Letter from Kevin J. Peters to Rajib Bhatt concerning the assessment of TRU waste box inventory. Report summarizing the assessment of TRU waste boxes originating from RFETS. Report was limited to 43 boxes of Raschig rings (IDC 442), dry combustibles (IDC 330 and 831), plastic (IDC 833), and wood (IDC 970).	03/16/99
C300A	WIPP Contact Handled (CH) Technical Safety Requirements, Draft TBD 2005, prepared for US DOE, WGI, Energy & Environment.	Contains the WIPP Contact-Handled (CH) Technical Safety Requirements (TSR) that defines the performance and safety management programs used to ensure WIPP safe operation. Sections 1. Use and Application, 2. Safety Limits, 3 and 4 Operational Limits and Surveillance Requirements, 5. Administrative Controls, 6. Design Features, and 7. References. Section 5.8, Specific Administrative Controls, describes the requirements for machine compacted waste. For machine compacted waste greater than 70 percent compaction, fissile loading shall not exceed 170 FGE unless overpacking drums meet the internal and external height dimensions of BNFL Drawing 53-9840 Revision 8. The first paragraph covers beryllium up to 1.0 weight percent with a 200 FGE limit (170 FGE for machine compacted waste). Subsequent bulleted paragraphs cover Be greater than 1.0 weight percent and polyethylene density and various packing/overpacking configurations.	04/18/05

Ref	Title/Description	Summary	Date
C311A	Memorandum from Steve Carpenter to Eric Schweinsberg on the detection of 1,1-dichloroethylene (1,1-DCE) in BNINW216 Rev 1 reconciliation lots (SPC-026-2005).	The memorandum identifies the detection of 1,1-Dichloroethylene (1,1-DCE) upper 90% Confidence Interval values of analyte HSG results above the PRQL during reconciliation of waste stream BNINW216 Rev. 1 data quality reconciliation lot BNINW216.26. The memorandum reflects that as indicated by the WIPP WAP language in permit attachment B4, Section B4-3b, page B4-12, where homogeneous solids (S3000) waste HSG results are not supported by analytical or AK information the D029 HWN does not have to be applied. As a result the D029 HWN was not to be assigned to this waste stream. The document also reflects that 1,1-DCE in HSG results could be due to radiolytic degradation of known constituents trichloroethylene and 1,1,1-trichloroethane. A foot note was to be added to reconciliation lots for the waste stream.	04/19/05
C312A	Memorandum from Steve Carpenter, TRU Programs SPM/AKE Designee to Eric Schweinsberg, TRU Programs Site Project Manager, "Discrepancy Report D031A – Beryllium Greater than 1% by Weight in RF-IDC 800 Waste – SPC-018-2005.	The memorandum reflects that some containers within RF-IDC 800 may have more than 1% Beryllium and therefore will require the formulation of new TRUCON codes and will be limited to 100 FGE per payload container and payload package. Revisions to the AK information will include: adding RF107.01 documentation to the AMWTP AK record for RF waste; revise form 1068 attached to C265A to point to the discrepancy report for this IDC; and revise the AK summary for first/second stage sludge, RPT-TRUW-09 to address Be contamination in RF-IDC-800.	03/14/05
C313A	Memorandum from Eric Schweinsberg, TRU Programs Site Project Manager (SPM) to File, "Discussion with RFETS Regarding Resolution of Discrepancy Between RFETS and INEEL Acceptable Knowledge on Cesium-137 – EPS-086-2004.	The memorandum outlines discussions between RFETS and TRU Program personnel regarding Cesium-137 (Cs), Strontium-90 (Sr) and drum identification numbers 10003304 and 10002837. Possible mis-association during a previous conversation with TRU personnel relating to drum identification numbers 10003304, 10002837 and 10011224 may have taken place with the fore mentioned drum identification numbers. The mis-association does not impact resolutions or discussions that 137C and 90Sr only pertain to IDC's 004 and 480.	12/15/04
C319A	Memorandum to Brian Edgerton, DOE-ID, Re: CBFO Approval of AMWTP Procedure INST-FO1-17, Revision 3D.	Documents changes required for the Facility Visual Examination procedure. Specific to AK is the instructions by CBFO to AMWTP to list leader rubber glove and apron waste as 100% rubber. File includes the corrected INT-FO1-17, Revison 3D, Exhibit 2.	12/17/04
C320A	E-mail correspondence from Mike Papp, RFETS concerning container M00821.	Documents disposition of container M00821, originally identified as IDC 490 but reassessed as IDC 480 and dispositioned by RFETS.	07/27/05
C322A	Memo from Norm Cyper, Building 374 Operations.	History of Building 374 including start date for evaporator/spray dryer operations.	07/13/98
C323A	Memo to File, Estimated percentages of Ferrous and Non-Ferrous Metals and CPR in filter debris waste stream BN211, CKA-011-2005.	Estimated waste material weights based on AK.	08/16/05

Ref	Title/Description	Summary	Date
C324A	Memorandum to file "Estimation of percentages of ferrous and non-ferrous metal and cellulosic, plastic, and rubber (CPR) waste materials in the BN835 waste stream."	Memorandum listing the assumptions, methodology, and source for the estimation of waste materials (ferrous, non-ferrous, and cellulosic, plastic, and rubber (CPR) in BN835 waste stream.	08/16/05
C325A	Memorandum to file "Estimation of percentages of ferrous and non-ferrous metal and cellulosic, plastic, and rubber (CPR) waste materials BNINW216 waste stream."	Memorandum listing the assumptions, methodology, and source for the estimation of waste materials (ferrous, non-ferrous, and cellulosic, plastic, and rubber (CPR) in BNINW216 waste stream.	08/16/05
C326A	Memorandum to file "Estimation of percentages of ferrous and non-ferrous metal and cellulosic, plastic, and rubber (CPR) waste materials BNINW218 waste stream."	Memorandum listing the assumptions, methodology, and source for the estimation of waste materials (ferrous, non-ferrous, and cellulosic, plastic, and rubber (CPR) in BNINW218 waste stream.	08/16/05
C328A	Memorandum to Eric Schweinsberg, Site Project Manager re: Detection of 1,1-dichloroethylene in BNINW216 Rev. 1 Reconciliation Lots.	Notification regarding detection of 1,1-dichloroethylene with UCL90 values in headspace gas results greater than the PRQL for containers in reconciliation lot BNINW216.26. Includes rationale for not assigning D029 HWN to the waste.	04/19/05
C330A	Memo to File, "Estimated percentages of Ferrous and Non-Ferrous Metals and CPR in metal debris waste stream BN296."	Documents the basis for estimating the weight percent of ferrous metal, non-ferrous metal, cellulosics, plastics, and rubber (CPR) in the metal debris waste stream BN296.	09/14/05
C331A	Memo to File, "Estimated Percentage of Plutonium in Metal Debris Waste Stream BN296."	Memorandum listing the values, calculations, and source used to estimate the percent plutonium for BN296 waste stream.	09/22/05
C332A	Memorandum to file from Vivian Sendelweck "Estimation of percentages of ferrous and non-ferrous metal and cellulosic, plastic, and rubber (CPR) waste materials BN243 waste stream."	Memorandum listing the assumptions, methodology, and source for the estimation of waste materials (ferrous, non-ferrous, and cellulosic, plastic, and rubber (CPR) in BN243 waste stream.	09/14/05
C333A – R3	Memorandum to file from Tim Venneman "Estimated of percentage of ferrous and non-ferrous metal and CPR in resin waste stream BN432."	Memorandum listing the values, calculations, and source used to estimate the percent Pu withing BN432 waste stream.	03/08/06
C334A – R3	Memo to File, Estimated percentages of Pu in resin debris waste stream BN432.	Memorandum listing the values, calculations, and source used to estimate the percent Pu within BN432 waste stream.	03/08/06
C335A	Memo to File, Estimated percentage of Pu in glass waste at INL.	Basis for stating less that 20 % Pu in waste.	09/16/05
C337A	Memorandum to file from Vivian Sendelweck "Estimation of percentages of ferrous and non-ferrous metal and cellulosic, plastic, and rubber (CPR) waste materials BN252 waste stream."	Memorandum listing the assumptions, methodology, and source for the estimation of waste materials (ferrous, non-ferrous, and cellulosic, plastic, and rubber (CPR) in BN252 waste stream.	09/21/05
C338A	Memo to File, Estimated percentage of Pu in leaded rubber waste at INL.	Basis for stating less that 20 % Pu in leaded rubber waste.	09/23/05
C453A	Memo to File, Estimated percentage of Pu in firebrick BN161.	Basis for stating less that 20 % Pu in firebrick BN161.	11/30/05
C454A	Memorandum to file from Tim Venneman "Estimation of percentages of ferrous and non-ferrous metal and cellulosic, plastic, and rubber (CPR) waste materials BN161 waste stream."	Memorandum listing the assumptions, methodology, and source for the estimation of waste materials (ferrous, non-ferrous, and cellulosic, plastic, and rubber (CPR) in BN161 waste stream.	11/30/05

Ref	Title/Description	Summary	Date
C459A	Memo to File, Estimated percentage of Pu in Special Setups BN004. VSS-012-2005.	Basis for stating less that 20 % Pu in Special Setups BN004.	11/12/05
C460A	Memorandum to file from Vivian Sendelweck "Estimation of percentages of ferrous and non-ferrous metal and cellulosic, plastic, and rubber (CPR) waste materials BN004 waste stream' VSS-013-2005.	Memorandum listing the assumptions, methodology, and source for the estimation of waste materials (ferrous, non-ferrous, and cellulosic, plastic, and rubber (CPR) in BN004 waste stream.	11/12/05
C506A	Interoffice Memorandum to AMWTP Site Project Managers, "Guidelines for AK Verification of Cs-137 and Sr-90 in RFETS Waste per AKR-05-208, SPC-017-2005" and Letter to Jerry Wells, "Completion of AK Discrepancy Resolution Regarding Cesium-137 and Strontium-90, SPC-030-2005."	This memorandum and letter documents the resolution of a discrepancy between Rocky Flats Plant (RF) and AMWTP concerning the possible presence of $^{137}Cs/^{90}Sr$ in RFP IDCs. These radionuclides have been confirmed to be present in RF-004 and RF-480. Identification of $^{137}Cs/^{90}Sr$ in any other IDC will require and assay Expert Technical Reviewer's approval followed by AKE review. The list of IDC's requiring such review is included in the memorandum.	03/01/05; 04/27/05
C507A	Interoffice Memorandum, "AMWTP Containers with a WTS Pack Date of 1/1/50," EPS-007-2006.	Description of the procedure for and the results of a process to re-assign reasonable pack dates for 204 containers of waste, primarily from RFP, with an erroneous WTS pack date of 1/1/50.	03/24/06
C509A	Memorandum to Vince Medina (VEE Lead), Dave Preston (VEE), and Jeff Shainholtz (VEE), "Rocky Flats (RF) Boxed Filter Waste, IDC 490," CKA-006-2005. Memorandum to Jeff Mousseau (TRU Programs Manager), Joan Connolly (Waste Ops Tech Support Manager), and Eric Schweinsberg (AK/SPM), "Clarification of the RF Boxed Filter Waste (IDC RF 490) Issue (CKA-006-2005)," CKA-010-2005.	This memorandum describes the precautionary measures that are to be taken to identify and manage boxes of Rocky Flats filter waste (IDC 490) that may be contaminated with nitrate salts. This memorandum clarifies the direction provided in CKA-006-2005. IDC RF 490 filter debris does not contain oxidizer materials that would confer the HWN D001 to the waste; therefore, the presence of nitrate salts is not an issue.	08/03/05 and 09/08/05
C510A	Roaster Oxide Information, from Julie Collins to distribution.	This email transmits 12 tables comparing Roaster Oxide (RO) information from the MIII_BIN.mdb, CARGO.mdb, and WILD 1-18-05 databases to WTS and the "load lists." It includes earlier emails from Jim Jackson and Carolyn Abbott regarding the identification and location of RO drums.	12/31/05
C511A	Record of interview/telecon with Vince Medina by Randall C. Morris, "Permeability of FibrePaks," March 22, 2006.	VE has never seen a coated FibrePak in waste at AMWTP. FiberPaks observed have a small roll top and metal band without a gasket which is permeable to hydrogen gas. During graphite scarfing at Rocky Flats around 1985-1986 Mr. Medina and his crew used to place graphite directly into FiberPaks. They had to discontinue this practice because they could not keep the graphite fines from migrating out of the FiberPak.	03/22/06
C512A	Memorandum to Eric Schweinsberg, "Addition of Methyl Chloride (Chloromethane) as a Target Analyte in Headspace Gas Analyses of BNINW216 and BNINW218 Waste," CKA-003-2005.	Based on review of AK and a statistical evaluation of headspace gas data, methyl chloride (chloromethane) was added as a target analyte in HGS of BNINW216 and BNINW218 waste.	07/13/05
C513A	Memorandum to Eric Schweinsberg, "Addition of Methyl Chloride (Choromethane) as a Target Analyte in Headspace Gas Analyses of BN835 Waste," CKA-004-2005.	Based on review of AK and a statistical evaluation of headspace gas data, methyl chloride (cholоromethane) was added as a target analyte in HGS of BN835 waste.	07/14/05

Ref	Title/Description	Summary	Date
C515A	Interoffice Memorandum, "Waste Matrix Code and Waste Parameter Guidance," CKA-015-2005.	Provides clarification regarding changes in assignment of waste matrix codes to various IDCs and to the waste parameters in AMWTP-RPT-TRUW-05.	09/30/05
C530A	Memorandum to C. K. Abbott, Visual Examination Confirmation of IDC RF-339, JWS-002-06.	Memorandum documents review of the five containers of leaded rubber gloves that have been visually examined (VE) by AMWTP personnel.	08/23/06
C531A	Memorandum to File, Acceptable Knowledge Assessment of the Potential Presence of Prohibited Items in Waste Stream BN252 (Item Description Code DC 339 and Item Description Code 463) Leaded Rubber Debris, CKA-004-2006.	Memorandum documents evaluation of the following AK information for leaded rubber debris waste: historical data including real time radiography (RTR) / visual examination (VE) comparison databases; Rocky Flats documentation of waste generation, treatment, and packaging; 3,100 m3 Project data; and AMWTP visual examination results. Based on this evaluation, no prohibited items are included in waste containers of leaded rubber debris that are approved for shipment to the WIPP facility for disposal and a VE would not provide additional relevant information.	09/12/06
C536A	Use of nitrobenzene at Rocky Flats.	Correspondence with Lisa Frost and Ed Vejvoda regarding Use of Nitrobenzene at Rocky Flats.	02/02/06
C618A	Memorandum to File: Summary of Retrieval Acceptable Knowledge (AK) for Pad R, Cell 1 Waste.	Summary of AK for the waste retrieved from the RWMC Subsurface Disposal Area (SDA) in the 1970's and stored in cargo containers and M-III bins on Pad R, Cell 1. The history of the retrieval projects from 1974 through 1978 is summarized. The retrieval projects discussed include Pit 1, Solid Radioactive Waste Retrieval Test, Initial Drum Retrieval, and Early Waste Retrieval. Historical IDs based on TWMIS entries for each cargo container and bin have been added to WTS and is included as Attachment 2. The IDCs addressed include: IW-176, IW-177, IW-178, IW-179, RF-998, RF-999, RF-741, RF-742, RF-743, RF-744, RF-745, RF-746, RF-747, RF-748, RF-750, RF-751, and RF-752.	05/21/09
C875S	Earliest pack date for Rocky Flats waste retrieved from Pits 11 and 12.	This document provides the justification for assuming an earliest pack date of 06/01/68 for containers retrieved from Pits 11 and 12.	07/05/10
C945A	Determination of Beryllium Content of RFETS TRU waste.	Correspondence interoffice memorandum from Scott M. Smith to Eric D'Amico addressing beryllium concentrations in RFETS TRU waste debris IDCs based on RFETS AK documentation identifying IDCs containing greater than 1 weight percent beryllium.	12/1/04
D001A	Discrepancy Report D001 – Assignment of Hazardous Waste Numbers D006 and D008 to RF IDC-802. SH-05-2002.	Resolution for assigning HWNs to RF IDC-802 in AMWTP-EDF-199.	11/18/02
D002A	Discrepancy Report D002A – Assignment of Hazardous Waste Number F003, to RF IDC-421. SH-02-2002.	Resolution for assigning HWNs to RF IDC-421 in AMWTP-EDF-199.	11/18/02
D003A	Discrepancy Report D003A – Removal of Hazardous Waste Numbers from RF IDC-409 and RF IDC-414. SH-03-2002.	Resolution for assigning HWNs to RF IDC-409 and RF IDC-414 in AMWTP-EDF-199.	11/18/02

Ref	Title/Description	Summary	Date
D004A	Discrepancy Report D004A – Assignment of Hazardous Waste Number D022 to RF IDC-978. SH-04-2002.	Resolution for assigning HWNs to RF IDC-978 in AMWTP-EDF-199.	11/18/02
D005A	Discrepancy Report D005A – Removal of Hazardous Waste Number D001 from RF IDC-33A, RF IDC-33B, and RF IDC-339. SH-01-2002.	Resolution substantiating the removal of HWN D001 from RF IDC-33A, RF IDC-33B, and RF IDC-339.	11/18/02
D006A	Discrepancy Report D006A – Removal of Hazardous Waste Number D002 from RF IDC-001, RF IDC-002, RF IDC-800, RF IDC-007, RF IDC 803, and RF IDC-807a. SH-06-2002.	Resolution substantiating the removal of HWN D002 from First/Second Stage Sludge (RF IDC-001, RF IDC-002, and RF IDC-800) and Building 374 Sludge (RF IDC-007, RF IDC 803, and RF IDC-807a).	12/11/02
D007A	Discrepancy Report D007A – Correct IDC Assignment for Building 374 Wet Sludge-Cemented. SH-09-2002.	Resolution establishing the correct IDC for Building 374 Wet Sludge as RF IDC-803.	12/11/02
D008A	Discrepancy Report D008A – Addition of Hazardous Waste Numbers to RF IDC-339. SH-08-2002.	Resolution substantiating the addition of HWNs F003, F006, F007, and F009 to Leaded Rubber Gloves and Aprons waste (RF IDC-339).	12/11/02
D009A	Discrepancy Report D009A – Addition of Hazardous Waste Numbers to RF IDC-371 and RF IDC-377. SH-07-2002.	Resolution substantiating the addition of HWNs F006, F007, and F009 to Fire Brick waste (RF IDC-371 and RF IDC-377).	12/11/02
D010A	Discrepancy Report D010A – Application of D002 to RF IDC-292 Containers Containing Excess Free Liquids. SH-19-2002.	Resolution substantiating the assignment of D002 to RF IDC-292 Sludge waste containing excess free liquids.	12/18/02
D011A	Discrepancy Report D011A – Assignment of HWN D011 to RF IDC-004. SH-11-2002.	Resolution substantiating the assignment of D011 to Special Setups (RF IDC-004 and RF IDC-802).	12/18/02
D012A	Discrepancy Report D012A – Assignment of HWN D029 to RF IDC-420 and RF IDC-421. SH-12-2002.	Resolution substantiating the assignment of D029 to Incinerator Ash (RF IDC-420) and Ash Heels (RF IDC-421).	12/18/02
D013A	Discrepancy Report D013A – Application of D001 to RF IDC-480 Containers Containing Excess Free Liquids or Compressed Gases. SH-13-2002.	Resolution substantiating the assignment of D001 to containers of Non-special Source Metals (RF IDC-480) containing excess free liquids or compressed gases.	12/18/02
D014A	Discrepancy Report D014A – Application of D002 to RF IDC-440 Containers Containing Excess Free Liquids. SH-14-2002.	Resolution substantiating the assignment of D002 to Glass waste (RF IDC-440) containing excess free liquids.	12/18/02
D015A	Discrepancy Report D015A – Application of D002 to RF IDC-441 Containers Containing Excess Free Liquids. SH-15-2002.	Resolution substantiating the assignment of D002 to unleached Raschig Rings waste (RF IDC-441) containing excess free liquids.	12/18/02
D016A	Discrepancy Report D016A – Application of D002 to RF IDC-336 Containers Containing Excess Free Liquids. SH-16-2002.	Resolution substantiating the assignment of D002 to Wet Combustibles (RF IDC-336) containing excess free liquids.	12/18/02
D017A	Discrepancy Report D017A – Removal of Hazardous Waste Number (HWN) D002 from RF IDC-33A and HWNs D001 and D002 from RF IDC-44A. SH-17-2002.	Resolution substantiating the removal of D002 from RF IDC-33A (WETP Bin Program – Combustibles A [IDCs 335, 336, 337, and 339]) and the removal of D001 and D002 from RF IDC-44A (WETP Bin Program – Glass [IDCs 440 and 442]).	12/18/02
D018A	Discrepancy Report D018A – Removal of Hazardous Waste Number D001 from RF IDC-48A. SH-18-2002.	Resolution substantiating the removal of D001 from RF IDC-48A (WETP Bin Program – Metals [IDCs 480 and 481]).	12/18/02

Ref	Title/Description	Summary	Date
D019A	Discrepancy Report D019A – Removal of Hazardous Waste Numbers from RF IDC-432 (Nonhazardous). SH-10-2002.	Resolution substantiating the removal of D007, D008, D029, F001, F002, and F005 from RF IDC-432 Cemented Resin generated after 1974. Cemented Resin generated prior to 1975 will retain the HWNs assigned in EDF-803.	12/18/02
D021A	Discrepancy Report D021A – Characterization of RF IDC-311 as a Nonhazardous Waste. SH-001-2003.	Resolution substantiating the non-mixed characterization of RF IDC-311 (graphite heels).	01/18/03
D025A	Discrepancy Report D025A – Characterization of RF IDC 310 as a Nonhazardous Waste.	Resolution of the inclusion of HWNs to RF IDC 310 in the Acceptable Knowledge Document (INEL-96/0280, Rev. 3). The HWNs currently listed in the AK document (Table 12-9) for RF IDC 310 are included in error.	09/16/03
D026A	Discrepancy Report D026A – Inclusion of Hazardous Waste Number F003 to RF IDCs 001, 002, and 800.	Resolution of the inclusion of HWN F003 to RF IDCs 001, 002, and 800 in the Acceptable Knowledge Document (INEL-96/0280, Rev. 3), and in BNFL-5232-RPT-TRUW-12, Table 2, Homogeneous Solids Waste Streams(S3000).	09/15/03
D027A	Discrepancy Report D027A – Inclusion of Hazardous Waste Number F004 to RF IDC 374.	Resolution for the deletion of the F004 EPA HWN in Table 5 of BNFL-5232-RPT-TRUW-12.	09/17/03
D029A	Discrepancy Report D029A - Generation Location for Prefix 0089 Wastes. BJT-001-2004.	Documents the update of acceptable knowledge for Rocky Flats Prefix 0089 to identify the generation location and generation dates for prefix 0089 wastes packaged prior to 1990. This information is currently added to RPT-TRUW-06 (Appendix B) and will be added to the next revision (4) of the Acceptable Knowledge Document for Rocky Flats.	07/22/04
D030A	Discrepancy Report D030A – Generation Location for Prefix 0090 Wastes. BJT-002-2004.	Documents the update of acceptable knowledge for Rocky Flats Prefix 0090 to identify the generation location and generation dates for prefix 0090 wastes packaged in the 1970s. This information is currently added to RPT-TRUW-06 (Appendix B) and will be added to the next revision (4) of the Acceptable Knowledge Document for Rocky Flats.	08/17/04
D031A	Discrepancy Report D031A – Beryllium Greater than 1% by Weight in RF-IDC 800 Waste, SPC-018-2005, Attachments C265A and P431A.	Update to the RF AK for the presence of beryllium in RF IDC 800 waste. This is based on the RF waste stream profile and waste stream summary (RF107.01 – P431A).	03/14/05
D032A	Discrepancy Report D032A Generation dates for BN004, Memo to Files, Vivian Sendelweck.	Resolution of discrepancy between generation dates in RPT-TRUW-06 and INEL-96/0280. Dates of generation are 1971 to 1988.	07/31/05
D033A	Discrepancy Report D033A – Removal of HWN D029 from RF wastes IDC 420, IDC 421, and IDC 422.	This is to rescind the previous discrepancy report # D012A.	-07/20/05
D034A	Discrepancy Report D034A – New Packaging Configuration for Rocky Flats (RF) IDC 001 (First Stage Sludge).	Updates the RF AK documentation concerning waste packaging for IDC 001 (First Stage Sludge).	08/03/05
D035A	Discrepancy Report D035A – Assessment of HWN D001 assigned to RF filter waste (IDCs 335, 338, 490).	Updates the RF AK documentation concerning filter waste from Building 374, Rocky Flats Plant.	08/09/05

Ref	Title/Description	Summary	Date
D036A	Discrepancy Report D036A – Assessment of HWNs assigned to RF filter waste (IDC 328).	Updates the RF AK documentation concerning filter waste from Building 771, Rocky Flats Plant.	08/09/05
D037A	Discrepancy Report D037A – Assessment of F-listed EPA HWNs associated with 1,1,1-trichloro-1,2,3-trifluoroethane in the Rocky Flats (RF) filter waste.	Updates the RF AK documentation concerning filter waste from Building 774, Rocky Flats Plant.	08/15/05
D041A	Discrepancy Report D041A – Assessment of EPA HWNs assigned to RF metal debris waste.	Documents the update of AK for Rocky Flats metal debris waste. Based on a review of the RF AK documents, EPA HWNs D004, D005, D010, D022, D029 and F005 are conservatively being identified for the metal debris waste assigned to waste stream profile BN296. In addition, HWN F001 (for methylene chloride) and F003 are not retained for the metal debris waste assigned to waste stream profile BN296. Therefore, the EPA HWNs applied to this waste stream profile are D004, D005, D006, D007, D008, D009, D010, D011, D022, D028, D029, F001, F002, F005, F006, F007, and F009.	09/14/05
D042A	Discrepancy Report D042A – Assessment of waste material parameters assigned to RF metal debris waste, MLJ-004-2005.	Update AMWTP-RPT-TRUW-05 concerning waste material parameters for metal debris waste from Rocky Flats Plant.	09/15/05
D043A	Discrepancy Report D043A – Assessment of hazardous waste numbers assigned to IDCs: 292, 371, 377 and 807 wastes. D043 (i.e. Rev. 1) has been revved to include RF818 and RF820; Rev. 1 June 5, 2006.	Update INEL-96/0280 to remove F006, F007 and F009 HWNs for IDCs 292, 371, 377, 807, 818 and 820 wastes.	01/29/09
D044A	Discrepancy Report D044A – Assessment of buildings that generated resin waste IDCs: 430, 431, 432, and 822.	Update INEL-96/0280 concerning the generation areas (i.e., building 865) for transuranic resin waste from Rocky Flats Plant.	02/01/06
D045A	Discrepancy Report D045A-Assessment Of Hazardous Waste Numbers (HWNs) Assigned To BN161 Waste Stream Profile [i.e., Item Description Codes (IDCs): RF371 and RF377) - TV-003-2006	Revise, at a minimum, the following reports: INEL-96/0280, AMWTP-RPT-TRUW-12 to include the addition of D022, D028 and D029 HWNs and remove references to F006, F007 and F009 HWNs from IDCs: RF371 (firebrick), and RF377 (coarse firebrick).	01/18/06
D046A	Discrepancy Report D046A – Assessment of hazardous waste numbers assigned to RF- IDCs: 432 and 822.	Update, applicable AK documents to reflect the addition of D022, D028 and D029 HWN to RF resin waste – IDC's.	01/18/06
D048A	Discrepancy Report D048A – Assessment of buildings that generated firebrick debris waste IDCs: 371 and 377.	Update INEL-96/0280 to remove buildings 371, 707 and 777 as generation sites for transuranic firebrick waste from Rocky Flats Plant.	01/18/06
D051A	Discrepancy Report D051A – Assessment of the presence of 137Cs in Rocky Flats Plant Waste, Rev. 1, CKA-020-2006.	Cesium-137 is expected in IDC's RF-004, and RF-480, but not normally expected in RF-001, -007, or -800 waste containers. In isolated cases, 137Cs may be detected in RF-002, -004, -480, and -970 due to the presence of sealed sources.	04/10/06
D052A	CCP Acceptable Knowledge Source Document Discrepancy Resolution; Waste Stream Number ID-RF-S5126, May 5 2005.	CCP's discussion of the rationale for assigning HWN's different than those assigned by the 3,100 m^3 Project.	05/05/05

Ref	Title/Description	Summary	Date
D053A	CCP Acceptable Knowledge Source Document Discrepancy Resolution; Waste Stream Number ID-RF-S5300-A; Revision 1, September 21, 2005.	CCP's discussion of the rationale for assigning HWN's different than those assigned by the 3,100 m^3 Project.	02/28/06
D054A	CCP Acceptable Knowledge Source Document Discrepancy Resolution; Waste Stream Numbers ID-RF-S3114 and ID-RF-S3150-A; Revision 1, December 21, 2005.	CCP's discussion of the rationale for assigning HWN's to the IDCs in two waste streams. The HWNs assigned by previous characterizations were inconsistent.	02/28/06
D055A	CCP Acceptable Knowledge Source Document Discrepancy Resolution; Waste Stream Number ID-RF-S5100-A; August 9, 2005.	CCP's discussion of the rationale for assigning HWN's to the IDCs in Waste Stream Number ID-RF-S5100-A. The HWNs assigned by previous characterizations were inconsistent.	03/01/06
D058A	Discrepancy Report D058A-Removal of F003 from IDCs 420, 421, 422 and 425.	AMWTP- RPT –TRUW-12 conservatively assigned an F003 HWN to IDCs 420, 421, 422 and 425. However since ignitable waste is prohibited at WIPP and the waste is not expected to be a liquid, or ignitable, the F003 HWN was removed.	06/13/06
D059A	Discrepancy Report D059A-Removal of EPA HWN F003 from RF waste, IDC 339.	The F003 HWN was assigned to IDC 339 based on D008A and previous characterization by INL 3,100 m^3 Project. The F003 HWN is not retained on the AMWTP WSP BN252 for IDC 339 waste because the waste is not liquid and is not ignitable and the F003 code does not apply.	08/02/06
D060A	Discrepancy Report D060A – Discrepancy in the Acceptable Knowledge Information for Item Description Codes 806 and 823 Wastes Reported in the INEL-96.0280 Report, "Acceptable Knowledge Document for INEEL Stored Transuranic Waste – Rocky Flats Plant Waste," Revision 03, Dated February 28, 2003, Section 17 and Acceptable Knowledge Documents in the Acceptable Knowledge Record – CKA-001-06.	Summary of the AK reevaluation to identify the wastes (IDCs) included in the IDC 806 (Solidified Process Solids) versus time period of generation and to the time period of generation for IDC 823 (Cemented Miscellaneous Sludge).	08/02/06
D061A	Prefix use, building numbers and process changes that occurred during the operational history at the Rocky Flats (RF) facility.	This Discrepancy Report describes the resolution of discrepancies associated with changes to building prefix numbers, buildings and processes as reported in multiple AK documents issued during the operational history of the RF facility.	07/11/07

Ref	Title/Description	Summary	Date
D063A	Advanced Mixed Waste Treatment Project (AMWTP), Rocky Flats Environmental Technology Site (RFETS) and Idaho National Laboratory's (INL) Accelerated Retrieval Project (ARP) Subsurface Disposal Area (SDA) hazardous waste determinations (HWDs)/Hazardous waste numbers (HWNs) for roaster oxide.	Various HWDs/HWNs have been assigned to Roaster Oxide. Each HWD is distinct and dependent upon the generator of the waste. The resolution establishes two distinct evaluations/positions depending on whether the container in question is intact or non-intact. 1. Intact containers of AMWTP RO wastes: The AMWTP's RO wastes within retrievable storage may exhibit a pyrophoric property due solely to uranium oxide chips. Uranium oxide and its associated pyrophoric property is exempt from RCRA requirements under a current AEA exclusion 40 CFR 261.4(a)(4) [i.e., Source, special nuclear or by-product material defined by the AEA of 1954, as amended, 42 U.S.C. 2011 et seq.]. AMWTP RO retrieval actions associated with the earthen covered storage area do not include mixing of RO wastes with other wastes. The RO waste is expected to be retrieved as intact containers and subsequently managed as such. The TRU program has reviewed the AK information and applicable RCRA requirements for AMWTP RO wastes. Intact containers of retrieved AMWTP RO waste are classified as non-hazardous waste by the TRU programs based on the above exclusion and previous background information and discussion. 2. Non-intact containers of AMWTP RO wastes: Non-intact containers of AMWTP RO wastes (any breached containers of RO) will undergo a case-by-case evaluation to determine listed waste applicability and pyrophoricity properties.	08/27/08
P001A	TRU Waste Compliance Program for WIPP-WAC (U). WO-4500-H. RF-P281.	A procedure that described the WIPP-certified transuranic waste generation process at Rocky Flats. The WIPP-WACCC audited RFP to this procedure to assure the waste met current WIPP requirements.	01/16/89
P002A	Organic and Sludge Immobilization System. RFP-4095.	Description of the development and operation of the OASIS process (IDCs 700 and 801).	07/27/87
P003A	Quality Assurance Program for TRU Waste Certification. WC-4500-D.	Companion procedure to WO-4500 specific to certification procedures used by Rocky Flats to pre-certify Transuranic waste shipped to INEL.	10/28/88
P004A	Rocky Flats Plant Waste Management Site Plan.	Description of waste activities at Rocky Flats emphasizing solid and liquid waste treatment.	12/01/87
P005A	Procedure for Labeling and Marking Unclassified TRU Waste Containers for Shipment to INEL. Traffic 300-1.	Traffic Department Procedure for labeling and marking containers of transuranic waste transported via ATMX rail car to INEL.	07/01/88
P006A	Gas Generation Results and Venting Study for Transuranic Waste Drums. RFP-3739.	Gas generation measurements from IDCs 001, 003, 330, 336, 337, and 339 wastes.	09/23/85
P007A	Waste Operations Internal Document Control for Documents Pertaining to the WIPP-WAC. WO-4000-A.	Procedure listing holders of controlled copies of procedures pertaining to generation of WIPP-certified waste.	01/09/89
P008A	Packaging and Handling Line- and Nonline-Generated Materials (U). 1-1002-C/0.	Packaging procedure stating general requirements for nonline- and line-generated waste. This procedure also includes IDC-specific packaging requirements.	04/26/88

Ref	Title/Description	Summary	Date
P009A	Characterization and Categorization Study of TRU Waste for EG&G. CSE 80-0017.	Description of drums destructively examined for EG&G Idaho. IDCs included are 330, 336, 480, 481, 442, 339, and 440.	Not Dated
P010A	Solid Waste Inspection. WC-4003-I.	Procedure for waste inspectors reviewing low-level waste and transuranic waste containers. (Page 9 has OASIS [IDC 801/700] recipe requirements.) IDC descriptions are included in the back of the procedures.	01/06/89 and 02/07/90
P011A	FY-1987 Waste Operations Operating Plan.	Describes manpower, budget, and waste operations for RFP during FY 1987.	Not Dated
P012A	TRUPACT-II Content Codes (TRUCON). 89-004, Rev. 6.	Content code descriptions (roll-up of IDCs) for transportation. Descriptions include generation area, short process write-up assay, and packaging configurations.	September 1992
P013A	EG&G Sampling Program Results FY 1987. PSD87-059.	Results from Destructive Examination of IDCs 292, 411, 440, 1, 3, 4, and 7 wastes.	December 1987
P014A	TRU Waste Certification Program for WIPP-WAC (U). CO-4500-A.	Forerunner to WO-4500. First procedure to describe the WIPP certification program at RFP.	05/24/83
P015A	TRU Waste Sampling Program: Volume I—Waste Characterization. EGG-WM-6503.	Destructive Examination and gas sampling of transuranic wastes. A large number of IDCs from RFP and LANL are represented.	September 1985
P016A	Idaho National Engineering Laboratory Code Assessment of the Rocky Flats Transuranic Waste. INEL-95/0281.	Description of each IDC shipped to INEL from RFP from 1985 until 1989.	July 1995
P017A	Preliminary Assessment of Real-Time Radiography and Visual Characterization for Selected Waste Categories. RFP-4604.	A variety of transuranic wastes in drums were examined by RTR then destructively examined in the Size Reduction unit. This project report details the accuracy of the RTR examination compared to usual examination and weighing of contents.	10/22/93
P018A	Waste Drum Gas Generation Sampling Program at Rocky Flats during FY 1988. RFP-4311.	Inorganic and organic sludges, Raschig rings, and combustible drums were evaluated for gas generation rate, gas composition, and physical contents in 1988.	02/11/91
P019A	HEPA Filter Optimization/Implementation. RFP-4171.	Describes efforts to reduce IDC 490 waste volume by using prefilters. Describes the Building 771 plenums.	02/10/88
P020A	Characteristics of Transuranic Waste at Department of Energy Sites. RFP-3357.	Inventory data (1981) for transuranic wastes at DOE facilities. No specific process information; rather, inventory data, i.e., radionuclide content, volume, weight, etc.	May 1983
P021A	EG&G Drum Sampling Program Results FY1986. PSD86-061.	Physical evaluation of drum contents for IDC 300, 303, 320, 339, 411, 432, 440, and 004. Drums originally generated at Rocky Flats, sent to Rocky Flats from INEL for examination, and then returned to INEL.	October 1986
P022A	EG&G Sampling Program Results FY 1989. PSD89-011.	Visual examination results for IDCs 003, 312, 300, 007, 001, 440, 442, 337, and 480. Waste originally generated at Rocky Flats, then returned to Rocky Flats from INEL for examination.	February 1989
P023A	(Task 5 Draft Report) Estimating Historical Emissions from Rocky Flats.	Chemical usage information at RFP.	November 1992

Ref	Title/Description	Summary	Date
P024A	Content Code Assessments for INEL Contact-Handled Stored Transuranic Wastes, WM-F1-82-021, T.L. Clements, Jr.	Assessment by content codes (IDCs) of CH-TRU contaminated wastes that were retrievably stored at the RWMC between 1970 and 1981. Document includes a waste description, generation source (e.g. process or facility that generated the waste) and packaging information including exceptions for some content codes. Document also includes a certification assessment.	October 1982
P025A	Standard for DOT-17C 55 Gallon Drum. Rocky Flats Plant STD No. SX-200 (formerly P.E. No. P12413). Revisions A (original) through G incorporated into document.	Procurement standard for white 55-gallon drums used for waste packaging.	06/30/06
P026A	Transuranic Solid Waste Inspection (U). WC-4003-A.	Procedure for inspector's examination of solid waste including paperwork, physical examination, and packaging.	11/11/85
P027A	TRU Waste Acceptance Criteria for the Waste Isolation Pilot Plant. WIPP/DOE-069.	Waste acceptance requirements for transuranic waste stored at the WIPP site.	January 1989
P028A	TRU Waste Certification Compliance Requirements for Acceptance of Newly Generated Contact-Handled Wastes to be Shipped to the Waste Isolation Pilot Plant. WIPP-DOE-114.	Discussion of WIPP/WAC criterion, intent, controlled properties, and compliance requirements.	January 1989
P029A	Safety Analysis Report for Packaging – Corrugated Steel Container (SAND Box) for DOE Specification 7A Packaging. RFP-3345.	This report details the Type A testing performed on the SAND Box.	05/16/83
P030A	Drop Test of DOT Specification 7A Type A Metal Corrugated Box (SAND box) with a ¾" Plywood Liner. WPS 89-001.	This report details the testing of the wooden liner for metal wastes placed in the SANDbox.	06/07/89
P031A	Full-Scale Drop-Impact Tests with DOT Specification 7A Waste Containers. WPS 88-001.	Details on testing of 55-gallon drums and SAND boxes for the revised ATMX SAR.	12/09/88
P032A	Waste Item Description Code Manual. WC-4004-A.	1987 procedure that provides IDC definitions and certification status for each IDC.	1987
P033A	Summary of Transuranic Waste Characterization Programs at the INEL (1979-Present), INEL-95/0397, Sheila Hailey.	This document describes the transuranic waste characterization programs to date including results of RTR examinations, visual examinations, headspace gas analysis, solid sample analysis, and radioassay. R1 issued to correct IDCs. The source document for this record is included in revision 0 of P033A on EDMS.	September 1995
P034A	Health, Safety & Environment Manual. Disposal of Excess Chemicals, Waste Oils, and Organic Solvents. HSE 21.01.	This procedure applies to the disposal of excess chemicals, waste oils, and organic solvents.	07/23/82
P035A	Backlog Residues at the DOE Rocky Flats Plant: Residue IDC Descriptions. Held by DOE-ID for review.	Document generated by the Residue Elimination project. The document describes the residue, IDC by IDC, with regard to form, plutonium content, RCRA characterization, and shipment information.	1993
P036A	Radioactive Waste Package Development at the Rocky Flats Plant. IAEA-SR-10/26.	Development of rigid liners for transuranic waste drums.	Not Dated

Ref	Title/Description	Summary	Date
P037A	Rocky Flats Environmental Technology Site 1995 Annual Land Disposal Restriction Progress Report.	Characterization information for LDR wastes. This document uses BWR as the primary characterization reference.	03/31/95
P038A	Residue Analysis Study. CE-010-001. Held by DOE-ID for review.	This document includes extracts of complete data/details for individual IDCS when required for analysis or discussion. General information on the scope, assumptions made, and methodologies used can be found in Chapters I through IV of the Study.	1992
P039A	Rocky Flats Plant Radioactive Waste Packaging Requirements. 1-M12-WO-4034.	Waste packaging requirements for low-level and transuranic waste.	09/01/94
P040	Operating the Building 771 Waste Collection System (Decontamination Shower and Process Sinks (U). CO-4017-F.	Operating procedure for Building 771 process waste (2nd stage treatment).	09/24/84
P041A	Waste Receiving and Transferring, Second Stage Tanks (U). WO-4026-A/0.	Operating procedure for 2nd stage treatment tanks in Building 774.	11/09/87
P042A	Liquid Waste Processing (Second Stage) (U). WO-4004-A.	Operating procedure for 2nd stage precipitation in Building 774.	01/01/87
P043A	TRU Waste Compliance Program for WIPP-WAC (U). WO-4500-F.	Procedure that RF was audited to for WIPP certified waste (pre-certified waste to INEL). Process descriptions for individual waste forms are located as appendices in the back.	1987
P044A	Evaluation of RFP TRU/TRU-Mixed Inventory for Compliance with Selected WIPP and TRAMPAC Requirements. 94-RF-06806.	Comparison of RF transuranic wastes to WIPP waste acceptance and transportation requirements.	1994
P045A	Standard for Corrugated Metal Waste Container (Steel Box). Rocky Flats Plant STD No. SX-231.	Procurement standard for corrugated metal boxes (also known as a 4 x 4 x 7 metal box or SAND Box).	1983
P046A	ATMX-600 Rail Car Safety Analysis Report (Draft). RFP-2444.	Provides details on the ATMX-600 rail car construction, operation, and safety features. The ATMX-600 was used to transport waste from RF to INEL.	1985
P047A	Filtering, Drying, Conveying, Cementing, and Packaging Sludge (U). WO-5014-A/1.	Procedure for waste treatment in Building 374.	1987
P048A	Waste Operations Supplies. WO-4040.	Document provides details on proper handling, storage, and preparation of waste supplies (empty containers, pallets, liners).	1989
P049A	Annual Land Disposal Restriction Progress Report. Rocky Flats Plant.	This document provides current (at the time of publishing) information on inventory and treatment development.	1994
P050A	Waste Acceptance Criteria for the Waste Isolation Pilot Plant. WIPP-DOE-069.	Waste acceptance requirements for transuranic waste at the WIPP site.	1991
P051A	Rocky Flats Environmental Technology Site Proposed Site Treatment Plan. Background Volume and Compliance Plan Volume.	Plan for treatment of RFP mixed wastes.	1995
P052A	Excerpts from the Backlog Waste Reassessment Baseline Book.	The Backlog Baseline Book provides RCRA characterizations and associated rationales for wastes stored at RF. Good source of process descriptions.	Various Dates
P053A	(Tasks 3 & 4 Final Draft Report) Reconstruction of Historical Rocky Flats Operations and Identification of Release Points.	Excellent historical description of Rocky Flats operations.	1992

Ref	Title/Description	Summary	Date
P054A	Handling Miscellaneous Wastes in Size Reduction Building 776. WO-4016-E.	Describes wastes treated in Size Reduction and secondary wastes generated from the waste treatment activities.	1988
P055A	Inspection of Raschig Rings in Contaminated Tanks (U). CO-3002.	Procedural requirements for inspecting Raschig rings including taking ring samples.	1988
P056A	Removal and Replacement of Raschig Rings.	Procedural requirements for removal of Raschig rings from tanks.	1989
P057A	Operations Safety Analysis (OSA). Raschig Ring Inspection, Removal, and Replacement. 771.037.	Operational safety analysis for Raschig ring inspection, removal, and replacement.	07/31/89
P058A	Rocky Flats Plant Hazardous Waste Determination Status Report No. 2. Held by DOE-ID for review.	Preliminary characterization data for residues. Published in 1991.	1991
P059A	Graphite Process Operations in Building 707. FO-0015. Held by DOE-ID for review.	Description of used graphite mold processing.	1991
P060A	Waste Stream and Residue Identification and Characterization Building 707. 707-V3.2. UCNI document held by DOE-ID.	Process description, flow diagrams, and descriptions for process outputs generated in Building 707. Includes other miscellaneous information such as preliminary data worksheets used to compile process knowledge of processes for the WSRIC building book, MSDSs, analytical results, etc.	1992
P061A	Waste Stream and Residue Identification and Characterization Building 771. 771-V3.2. Held at DOE-ID as "Possibly UCNI."	Process description, flow diagrams, and descriptions for process outputs generated in Building 771.	1992
P062A	Waste Stream and Residue Identification and Characterization Building 779. 779-V3.2. Held at DOE-ID as "Possibly UCNI."	Process description, flow diagrams and descriptions for process outputs for Building 779.	1991
P063A	Packaging Wastes for Shipment Offsite (U). Revisions A-C incorporated into document. WO-4034-C. Rev. C.	Packaging requirements for transuranic and low-level wastes atRF.	1986
P064A	Waste Packaging Requirements. Revisions A-F incorporated into document. WO-4034-F. Rev. F.	Packaging requirements for transuranic and low-level wastes atRF.	1988
P065A	Material Safety Data Sheet for Purifloc I A23 Flocculant.	Composition of precipitation flocculant used in Building 774.	03/01/85
P066A	Material Safety Data Sheet for ENVIROSTONE (and related data).	Composition of Envirostone products used in OASIS process.	05/12/86
P067A	Waste Stream Identification and Characterization. Held at DOE-ID as "Possibly UCNI."	Descriptions of Rocky Flats waste streams and processes.	1987
P068A	Chemical Safety Bulletins Building 81 – 83.	MSDS-like composition information for chemicals atRF.	1962
P069A	Nuclear Materials Control Elements printout. SAN Database. Report No. 6016-01.	Element coding in SAN for accountable nuclear material.	Query date 06/01/84
P070A	Operational Safety Analysis (OSA). Waste Receipt and Processing No. 774.001.	Contains treatment process descriptions from Building 774.	1995
P071A	Waste Receiving and Transferring (Second Stage) Bldg. 774. WO-2026.	Operating procedure for tanks associated with 2nd stage treatment in Building 774.	1990

Ref	Title/Description	Summary	Date
P072A	EG&G Rocky Flats Plant Waste Operations Procedures Nuclear Safety Related Category 3. TRU Organic Sampling and Transferring, Buildings 707 and 777. WO-2010.	Operating procedure for pipeline transfers of organic waste to Building 774.	1991
P073A	Process Qualifications Report for Miscellaneous Waste Handling and Solidification (Bottlebox) Building 774. A-008-LWTO.	Process development information for IDC 004/802 waste.	1993
P074A	Plutonium Recovery Waste Collection System. Building 771. WO-4007-B.	Information on collection and treatment of liquid wastes from Building 771.	1988
P075A	Liquid Waste Processing (First Stage). WO-4001-A.	Operating procedure for 1st stage waste treatment.	1988
P076A	Waste Stream Residue Identification and Characterization Building 559. 559-V3.2.	Process description, flow diagrams, and descriptions for process outputs generated in Building 559.	1991
P077A	Waste Stream Residue Identification and Characterization Building 774. 774-V3.2.	Process description, flow diagrams, and descriptions for process outputs generated in Building 774.	1992
P078A	Waste Stream Residue Identification and Characterization Building 776. 776-V3.2.	Process description, flow diagrams, and descriptions for process outputs generated in Building 776.	1992
P079A	Waste Stream Residue Identification and Characterization Building 777. 777-V3.2. UCNI document held by DOE-ID.	Process description, flow diagrams, and descriptions for process outputs generated in Building 777.	1992
P080A	RCRA Land Disposal Restrictions: A Guide to Compliance. 1995 Edition. The Hazardous Waste Consultant. Vol. 12, Issue 6. ISSN 0738-0232.	The document is a guidance and interpretation book on RCRA regulations. Specifically, the book provides guidance on assigning EPA hazardous waste numbers and the applicability of the land disposal restrictions.	October/ November 1994
P081A	Waste Stream Residue Identification and Characterization Building 371. 371-V3.2.	Process description, flow diagrams, and descriptions for process outputs generated in Building 371.	1992
P082A	Waste Stream Residue Identification and Characterization Building 374. 374-V3.2.	Process description, flow diagrams, and descriptions for process outputs generated in Building 374.	1992
P083A	Waste Stream and Residue Identification and Characterization Database.	Rocky Flats waste stream information. Originally gathered in 1989-1990.	1996
P084A	Material Safety Data Sheet for Varsol 1.	Varsol is a trade name for petroleum solvent or Stoddard Solvent.	08/25/86
P085A	Waste Systems Progress Report March 1983 through February 1984. RFP-3682.	Summary of waste treatment technology development for transuranic wastes.	1984
P086A	Neptunium Processing at the Rocky Flats Plant. RFP-2899.	Summary of Neptunium-237 processing at Rocky Flats.	09/20/81
P087A	Nondestructive Radioassay for Waste Management – An Assessment. RFP-3256.	History of waste radioassay at Rocky Flats from 1964 to 1981.	1981
P088A	Glovebox Window Materials. RFP-1424.	Information regarding glovebox window and window adhesive materials used at Rocky Flats in 1970.	1970
P089A	Waste Systems Progress Report March 1984 through February 1985. RFP-3871.	Summary of waste treatment technology development for transuranic waste.	1986
P090A	History of Rocky Flats Waste Streams. RFP-3186.	History of Rocky Flats waste shipped to the INEL from 1971 to 1979.	1982
P091A	Materials Hazards Manual.	Hazards and composition of chemicals used at Rocky Flats.	1976

Ref	Title/Description	Summary	Date
P092A	Residue Dissolution (Lines 23 and 25) (U). CO-1026-T/0.	Process procedure for dissolution of pulverized incinerator ash, graphite, sand, slag, and crucible, along with resultant heels.	1988
P093A	Residue Dissolution, Gloveboxes 1500 A, 1500 B, and 1515, Building 371 (U). CO-1130-B/0.	Process procedure for dissolution of incinerator ash in Building 371.	1988
P094A	Special Recovery Operation General Procedures (U). CO-2018-E/0.	General procedures for tank and powder sampling in the Special Recovery area of Building 771.	1988
P095A	Plutonium-Neptunium Separation (U). CO-2017-B/0.	Procedures for processing plutonium-neptunium mixtures including oxide dissolution, feed preparation, wash preparation, ion column operations, and product evaporation.	1987
P096A	Operating the Ion Columns (Special Recovery, Line MT-4) (U). CO-2010.	Operating procedures for the Special Recovery ion column system.	1989
P097A	HSA Incineration System Scarfing and Grinding (U). CO-6017-C, Revision C. Revision A-C incorporated to document.	Procedures for scarfing of graphite and firebrick in Building 371.	06/05/84
P098A	Resin Cementing Line 2 (U). CO-1027.	Operating procedures for the cementation of resin, sludge, grit, ash, and heel in Building 771.	1988
P099A	Molten Salt (8%) Residue Process (Line 30) (U). CO-1012-G.	Operational procedure for dissolution of 8% magnesium chloride molten salt in Building 771.	1978
P100A	Leaching Tantalum Fixtures and Inserts (Line 5) (U). CO-1019-K/0.	Operating procedure for acid leaching to remove plutonium from tantalum fixtures in Building 771.	1988
P101A	Modified Purex Solvent Extraction Process (Special Recovery; Lines MT-3, MT-7) (U). CO-2005-K/0.	Operating procedure for organic/aqueous solvent extraction of uranium from plutonium in the special recovery area of Building 771.	1988
P102A	Anion Exchange (Lines 42 and 43D) (U). CO-1033-AA/0.	Operating procedure for plutonium nitrate solution purification using anion exchange resin in Building 771.	1988
P103A	Sand, Slag, and Crucible Size Reduction, Lines 43A and C(U). CO-1005-J/0.	Operating procedure for crushing and grinding sand, slag, and crucible generated in the reduction process during plutonium metal production.	1988
P104A	Scarfing Graphite (Line 43A) (U). Revisions A-D incorporated into document. CO-1076-D, Revision D.	Operating procedure for scarfing graphite in Building 771.	09/29/88
P105A	Operational Safety Analysis (OSA). Special Recovery Ion Exchange. 771.047.	Operational safety analysis for ion exchange separation of actinides in the Special Recovery area of Building 771.	1989
P106A	Waste Stream Residue Identification and Characterization Building 374. 374-V5.0.	Process description, flow diagrams, and descriptions for process outputs generated in Building 374.	1993
P107A	Waste Stream Residue Identification and Characterization Building 559. 559-V5.0.	Process description, flow diagrams, and descriptions for process outputs generated in Building 559.	1993
P108A	Waste Stream and Residue Identification and Characterization Building 707. 707-V5.0. Held by DOE-ID for review.	Process description, flow diagrams, and descriptions for process outputs generated in Building 707.	1995
P109A	Waste Stream Residue Identification and Characterization Building 774. 774-V5.0.	Process description, flow diagrams, and descriptions for process outputs generated in Building 774.	1993

Ref	Title/Description	Summary	Date
P110A	Waste Stream Residue Identification and Characterization Building 776. 776-V5.0.	Process description, flow diagrams, and descriptions for process outputs generated in Building 776.	1993
P111A	Waste Stream Residue Identification and Characterization Building 777. 777-V5.0.	Process description, flow diagrams, and descriptions for process outputs generated in Building 777.	1992
P112A	Waste Stream Residue Identification and Characterization Building 779. 779-V5.0.	Process description, flow diagrams, and descriptions for process outputs generated in Building 779.	1991
P113A	Actinide Processing at Rocky Flats. Held by DOE-ID for review.	Detailed description of actinide recovery and waste treatment at Rocky Flats.	1991
P114A	Federal Facilities Compliance Agreement Compliant Order Storage Report.	Information on Rocky Flats LDR wastes as compiled in 1989 and 1990 including process descriptions and inventories.	1990
P115A	Solid Waste Information Management System Database.	Container information for transuranic waste shipped to INEL from Rocky Flats 1985 through 1989.	
P116A	Federal Facilities Compliance Agreement / Compliance Order Inventory Report.	Process descriptions and inventories for Rocky Flats mixed waste that was not LDR in 1989.	1989
P117A	Sorting and Scarfing Firebrick (Line 48) (U). CO-1039-D.	Operating procedure for sorting and scarfing firebrick from the Building 771 incinerator.	1988
P118A	Material Safety Data Sheet for Supertemp 1900 / Ramcote 1200.	MSDS for cement referred to as pipe insulation or magnesia cement.	January 1991
P119A	Material Safety Data Sheet for Metex Chemicals.	Composition of Metex-series chemicals used at Rocky Flats. Metex solution is referenced in the Building 774 setup log book (U043). It is unclear which Metex product was treated.	1985-1986
P120A	Flammability of Leaded Dry-Box Gloves. RFP-1354.	Results of a study of the reaction of nitric acid with neoprene and Hypalon leaded gloves.	06/0669
P121A	Waste Characterization Report Heavy Metals. Item Description Code 320.	Description of the heavy metal inventory (IDC 320) of Rocky Flats.	04/30/93
P122A	Document title unknown. Exhibit 1 excerpt. RFP-4148.	Excerpt from RFP-4148—results of the analysis of 774 sludge samples.	Not dated
P123A	Packaging Rocky Flats Waste. Radioactive Waste. Article excerpted from Nuclear Technology, Volume 32.	Packaging of liquid and solid treated wastes at Rocky Flats.	05/17/76
P124A	A Survey of the Rocky Flats Division Waste Stream. CRDL-950351-009.	Source, volume, composition, and disposition of aqueous and solid waste streams and air emissions from Rocky Flats Plant.	06/30/72
P125A	Waste Stream Residue Identification and Characterization Sampling and Analysis Database.	Analytical data from WSRIC waste stream sampling and sampling of Rocky Flats inventory waste.	1992
P126A	Waste Stream and Residue Identification and Characterization Building Valve Vaults. Version 3.2.	Describes the aqueous process wastes from various buildings on plant site that are sent to Building 374 through the process waste transfer system.	1993
P127A	INEL SWEPP Track Accessible Database.	INEL accessible drum storage data for Rocky Flats inventory, including number of containers and dates of generation.	1996
P128A	Material Safety Data Sheet for Mariko. Huntington Laboratories, Inc..	Material Safety Data Sheet for Mariko.	09/11/86

Ref	Title/Description	Summary	Date
P129A	Material Safety Data Sheet for OX-Out 536. ChemClean Corporation.	Material Safety Data Sheet for OX-Out 536.	05/05/86
P130A	Material Safety Data Sheet for TRIM SOL. Master Chemical Corporation.	Material Safety Data Sheet for TRIM SOL, used at Rocky Flats	02/27/92
P131A	Waste Analysis at Facilities that Generate, Treat, Store, and Dispose of Hazardous Wastes. A Guidance Manual. PB94-963603. OSWER 9938.4-03.	EPA Guidance for Waste Analysis and when acceptable knowledge should be used.	April 1994
P132A	Predecisional Draft Transuranic Waste Characterization Acceptable Knowledge Guidance Document. US Department of Energy. R-6078.	Guidance document for the use of acceptable knowledge.	August 1995
P133A	Quality Assurance Program Description. US Department of Energy. CAO-94-1012, Revision 0.	Quality management document which identifies federal and industry quality requirements applicable to the CAO quality assurance program.	June 1994
P134A	Waste Isolation Pilot Plant RCRA Part B Permit Application. Appendix C9, TRU Waste Characterization Using Acceptable Knowledge. DOE/WIPP 91-005.	Methodology for the use of Acceptable Knowledge.	01/15/96
P135A	Guidance for Preparing Transuranic Waste Sampling Plans (Draft). US Department of Energy. R-6157.	Guidance on how to develop site-specific sampling plans.	November 1995
P136A	Guidance for Preparing Transuranic Waste Sampling Plans. US Department of Energy. R-6157.	Guidance on how to develop site-specific sampling plans.	February 1996
P137A	Transuranic Waste Characterization Quality Assurance Program Plan. CAO-94-1010. Rev. 0, April 30, 1995. Interim Change, November 15, 1996.	Identifies the quality of data necessary and techniques designed to attain and ensure the required quality to meet WIPP-DQOs. This is a single record. A number of Revision 0 pages were replaced with Interim Change pages throughout the document.	04/30/95
P138A	Waste Acceptance Criteria for the Waste Isolation Pilot Plant. US Department of Energy. DOE/WIPP-069, Revision 5, Draft D.	Waste acceptance criteria for WIPP.	01/01/96
P139A	Reactivity of Pyrochemical Salts at Rocky Flats Plant. EG&G Rocky Flats, Inc. 14-RF-04701.	Review of the reactivity characterization of pyrochemical salts.	April 1994
P140A	Analytical Methods for Determining the Reactivity of Pyrochemical Salts. TDR-94-011.	Methods developed to analyze pyrochemical salts for reactivity; includes description of metals in pyrochemical salts.	04/18/94
P141A	Matrix Parameter Category Groups (MPCG). Engineering Design File. LMITCO. RWMC-EDF-805; INEL-95/029, Rev. 0, December 13, 1995. Rev. 1, October 27, 1997. Rev. 2, April 12, 2001. Rev. 3, July 9, 2002. Rev. 4, September 13, 2002.	Groups the waste streams in the Transuranic Storage Area at the Radioactive Waste Management Complex into MPCGs. Also included is a logic diagram for characterization of TRU wastes (from CAO-94-1010) and definitions for various MPCs (from the DOE Waste Treatability Group Guidance document, DOE/LLW-217).	12/13/95
P142A	Material Safety Data Sheet for ZL-30A Zyglo Penetrant. Magnaflux Corporation.	Zyglo Penetrant MSDS.	04/04/86
P143A	Material Safety Data Sheet for Developer Fluid Contained in Film Pod. Polaroid Corporation.	Developer Fluid container in film pod MSDS.	02/10/86

Ref	Title/Description	Summary	Date
P144A	Material Safety Data Sheet for KODAK Developer D019. CAT 146 4593, CAT 194 6045. Eastman Kodak Company.	Kodak Developer D-19 MSDS.	03/14/84
P145A	Material Safety Data Sheet for KODAK INDUSTREX Developer Replenisher, Part A. CAT 139 7215. Eastman Kodak Company.	Kodak INDUSTREX Replenisher MSDS.	01/03/85
P146A	Material Safety Data Sheet for KODAK INDUSTREX Developer. CAT 162 8528. Eastman Kodak Company.	Kodak INDUSTREX Starter MSDS.	08/27/84
P147A	Material Safety Data Sheet for KODAK HRP Developer. CAT 140 1306. Eastman Kodak Company.	Kodak HRP Developer MSDS.	06/25/84
P148A	Material Safety Data Sheet for KODAK RP X-OMAT Developer Replenisher. Eastman Kodak Company.	Kodak RP X-OMAT MSDS.	12/31/85
P149A	Material Safety Data Sheet for ZE-3 Zyglo Emulsifier. Magnaflux Corporation.	Zyglo Emulsifier MSDS.	05/01/86
P150A	Material Safety Data Sheet for ZP-Zyglo Aqueous Developer. Magnaflux Corporation.	Zyglo Aqueous Developer MSDS.	11/13/85
P151A	Safety Analysis Report for the TRUPACT-II Shipping Package. Volume 4, Appendix 3.6.8. Revision 14.	Radiolytic G values for waste materials.	10/01/94
P152A	"Plutonium Metal Feed Specification for Use in the Weapons Program." Volume I. UCNI document held by DOE-ID.	Metallurgical, chemical, and isotopic specifications for Rocky Flats WR Plutonium (nonspecification plutonium definition).	03/22/85
P153A	Analytical Requirement Review of Saltcrete. Item Description Code 804. 96-RMRS-SSOC-0004.	Analytical requirements for saltcrete for LDR regulations.	02/20/96
P154A	Uncertainty Analysis of the SWEPP Drum Assay System for Graphite. Content Code 300. INEL-95/0475.	Describes the methodology for determining the total uncertainty of the SWEPP drum assay system for graphite content code 300.	September 1995
P155A	Uncertainty Analysis of the SWEPP PAN Assay System for Glass Waste. Content Codes 440, 441, and 442. INEL-96/0343.	Describes the methodology for determining the total uncertainty of the SWEPP drum assay system for glass waste, content codes 440, 441, and 442.	October 1996
P156A	Uncertainty Analysis of the SWEPP PAN Assay System for Combustible Waste. Content Codes 330 and 336. INEL 96/0257.	Describes the methodology for determining the total uncertainty of the SWEPP drum assay system for combustible waste, content codes 330 and 336.	August 1996
P157A	Proceeding of the Non-Destructive Assay and Non-Destructive Examination Waste Characterization Conference. CONF-940216.	Experience gained from Passive/Active Neutron (PAN) assay managements on 12,600 TRU waste drums at INEL LV East, G.K. Becker, Second Generation PAN.	February 1994
P158A	Matrix Effects in TRU Assays using the SWEPP PAN Assay System. EGG-PHY-9204.	DAS (Drum Assay System) study of DAN system results of 50,000 drums of TRU waste fromRF. Active assay matrix dependent on correlation factors for many IDCs.	August 1990
P159A	SWEPP Non-Destructive Assay (NDA) Methodology for Waste Entrained Uranium. RWMC-657.	Describes the process used to quantify U238 in waste using PAN.	09/01/93

Ref	Title/Description	Summary	Date
P160A	Relative Isotopic Mass Ratio Gamma Measurements. RWMC-EDF-658.	Describes the technique used for radionuclide identification and the determination of relative isotopic mass ratios in wastes in SWEPP.	06/28/94
P161A	Dose Reconstruction Project Task 5. Estimating Historical Emissions from Rocky Flats.	Development of estimates for routine radioactive airborne emissions, routine nonradioactive airborne emissions, routine surface-water-borne emissions, and nonroutine contaminant releases.	11/01/92
P162A	Dose Reconstruction Project Task 1. Identification of Chemicals and Radionuclides Used at Rocky Flats, Draft Report.	Preparation of a list of the radionuclides and chemicals that have been used or produced at Rocky Flats since 1952.	January 1991
P163A	Rocky Flats Plant Plutonium Recovery Reference Process. (Including Historical References 1952 to 1991). RT92-002. Held by DOE-ID for review.	Plutonium recovery at Rocky Flats.	02/03/92
P164A	A History of the Rocky Flats Plutonium/Actinide Recovery Plant, 1952-1991. RT92-003. UCNI document held by DOE-ID. RF-P262.	Actinide recovery at Rocky Flats; includes plutonium, americium, uranium, neptunium, and curium processes.	02/03/92
P165A	A Comprehensive History of the Rocky Flats Plutonium/Actinide Recovery Operations. 1952 – 1991. Held by DOE-ID for review.	A more comprehensive version of "A History of the Rocky Flats Plutonium/Actinide Recovery Plant."	
P166A	Rocky Flats Risk Assessment Guide. RF/03/00/85/0/5.	Methodologies used to determine risk of facilities and operations at the Rocky Flats Plant.	March 1985
P167A	Neptunium Processing at the Rocky Flats Plant. RFP-2899.	Processes used at Rocky Flats to recover and purify neptunium and processes used for conversion to metal for casting and rolling.	09/20/81
P168A	Status of Americium-241 Recovery at Rocky Flats Plant. RFP-3061.	Extraction of americium 241 by MSE.	03/18/81
P169A	Plutonium Isotopic Ratios at Rocky Flats.	Inventory of plutonium fallout from mass spectroscopic analysis of plutonium recovered from soil around Rocky Flats.	Not Dated
P170A	The Past 30 Years at Rocky Flats Plant. HS371. UCNI document held by DOE-ID.	A summary of experiences and observations at Rocky Flats Plant over the past 30 years with an emphasis on health and safety.	November 1982
P171A	Evaluation of Residue Drum Storage Safety Risks. RFP-4826, UC-721, DOE/OSTI-4500.	Potential safety problems of packaged drums at Rocky Flats.	06/17/94
P172A	Standard for Cylindrical HEPA Filters. SMU-404.	Standard for cylindrical shaped, fire resistant, water resistant, high efficiency particulate air (HEPA) filter units.	02/01/74
P173A	Standard for HEPA Filters, General Purpose. SMU-401.	Standard for square and rectangular shaped, fire resistant, water resistant, high efficiency particulate air (HEPA) filter units.	02/01/74
P174A	Building 374 Evaporator Feed Streams.	Identifies waste that is treated in the evaporation process at Building 374. Drawings referenced in the table are not included.	04/21/92
P175A	Conceptual Design Report – Plutonium Recovery Project. Volume II Part 3 – Technical Appendix: Specifications and Drawings. 87-RF-1817. Held by DOE-ID for review.	Specifications and drawings for the conceptual design of the plutonium recovery processes in Building 371.	03/16/87

Ref	Title/Description	Summary	Date
P176A	Project Plan for Inspection, Sampling, and Characterization of Solid Residues. SRM-012-022.	Detailed chemical and physical analysis of a representative sampling of the residues.	12/13/95
P177A	(Task 2 Final Report) Selection of the Chemicals and Radionuclides of Concern.	Excellent historical description of Rocky Flats operations.	June 1991
P178A	Research and Development Quarterly Progress Report. October, November, and December 1968. RFP-1311-A. Held by DOE-ID for review.	Reports summarizing special order, research and development, analytical development, production support (recovery development).	01/31/69
P179A	Research and Devleopment Quarterly Progress Report. April, May, and June 1969. RFP-1406-A. Held by DOE-ID for review.	Reports summarizing special order, research and development, production support (recovery processes).	1989
P180A	Research and Development Quarterly Progress Report. July, August, and September 1969. RFP-1436-A. Held by DOE-ID for review.	Reports summarizing special order, research and development, analytical development, production support (recovery development).	10/31/69
P181A	Research and Development Quarterly Progress Report. January, February, and March 1970. RFP-1519-A. Held by DOE-ID for review.	Reports summarizing special order, research and development, analytical development, production support (recovery development).	04/30/70
P182A	Research and Development Quarterly Progress Report. April, May, and June 1970. RFP-1569-A. Held by DOE-ID for review.	Reports summarizing special order, research and development, analytical development, production support (recovery development).	09/16/70
P183A	Research and Development Quarterly Progress Report. July, August, and September 1970. RFP-1602-A. Held by DOE-ID for review.	Reports summarizing special order, research and development, analytical development, production support (recovery development).	10/30/70
P184A	Research and Development Quarterly Progress Report. October, November, and December 1970. RFP-1638-A. Held by DOE-ID for review.	Reports summarizing special order, research and development, analytical development, production support (recovery development).	01/31/71
P185A	Research and Development Quarterly Progress Report. January, February, and March 1971. RFP-1691-A. Held by DOE-ID for review.	Reports summarizing special order, research and development, analytical development, production support (recovery development).	04/30/71
P186A	Research and Development Quarterly Progress Report. April, May, and June 1971. RFP-1748-A. Held by DOE-ID for review.	Reports summarizing special order, research and development, analytical development, production support (recovery development).	07/30/71
P187A	Research and Development Quarterly Progress Report. July, August, and September 1971. RFP-1790-A. Held by DOE-ID for review.	Reports summarizing special order, research and development, analytical development, production support (recovery development).	10/29/71
P188A	Research and Ecology Annual Report. Chemistry Research and Development (Published 4/14/72). RFP-1837-A. Held by DOE-ID for review.	Reports summarizing special order, research and development, analytical development, production support (recovery development).	04/14/72
P189A	Research and Ecology Semi-Annual Report. Chemistry Research and Development. January-June 1972. RFP-1921-A. Held by DOE-ID for review.	Reports summarizing special order, research and development, analytical development, production support (recovery development).	08/30/72
P190A	Research and Ecology Semi-Annual Report. Chemistry Research and Development. July through December 1972. RFP-1837-A. Held by DOE-ID for review.	Reports summarizing special order, research and development, analytical development, production support (recovery development).	05/16/73

Ref	Title/Description	Summary	Date
P191A	Research and Ecology Semi-Annual Report. Chemistry Research and Development. January-June 1973. RFP-2102-A. Held by DOE-ID for review.	Reports summarizing special order, research and development, analytical development, production support (recovery development).	08/13/73
P192A	Research and Ecology Semi-Annual Report. Chemistry Research and Development. July-December 1973. RFP-2200-A. Held by DOE-ID for review.	Reports summarizing special order, research and development, analytical development, production su+pport (recovery development).	03/18/74
P193A	Research and Development Semi-Annual Progress Report for July through December 1974. RFP-2360-A. Held by DOE-ID for review.	Reports summarizing special order, research and development, analytical development, production support (recovery development).	02/24/75
P194A	Research and Development Semi-Annual Progress Report for January through June 1975. RFP-2417-A. Held by DOE-ID for review.	Reports summarizing special order, research and development, analytical development, production support (recovery development).	08/29/75
P195A	Research and Development Semi-Annual Progress Report for January through June 1977. RFP-2680-A. UCNI document held by DOE-ID.	Reports summarizing special order, research and development, analytical development, production support (recovery development).	10/21/77
P196A	Chemistry Research and Development Annual Progress Report November 1, 1979 to October 31, 1980. RFP-3180. Held by DOE-ID for review.	Reports summarizing special order, research and development, analytical development, production support (recovery development).	08/04/81
P197A	Chemistry Research and Development Annual Progress Report November 1, 1980 to September 30, 1981. RFP-3324. Held by DOE-ID for review.	Reports summarizing special order, research and development, analytical development, production support (recovery development).	08/11/82
P198A	Chemistry Research and Development Annual Progress Report November 1, 1981 to September 30, 1982. RFP-3511. Held by DOE-ID for review.	Reports summarizing special order, research and development, analytical development, production support (recovery development).	09/16/83
P199A	Chemistry Research and Development Annual Progress Report October 1, 1982 to September 30, 1983. RFP-3654. Held by DOE-ID for review.	Reports summarizing special order, research and development, analytical development, production support (recovery development).	09/24/84
P200A	Chemistry Research and Development Annual Progress Report October 1, 1983 to September 30, 1984. RFP-3825. Held by DOE-ID for review.	Reports summarizing special order, research and development, analytical development, production support (recovery development).	06/13/86
P201A	Chemistry Research and Development Annual Progress Report October 1, 1984 to September 30, 1985. RFP-3931. Held by DOE-ID for review.	Reports summarizing special order, research and development, analytical development, production support (recovery development).	08/18/86
P202A	Chemistry R&D Monthly Progress Report. R&D 86-012. Held by DOE-ID for review.	Reports summarizing special order, research and development, analytical development, production support (recovery development).	January 1986
P204A	Linking Legacies. Connecting the Code War Nuclear Weapons Production Processes to Their Environmental Consequences. DOE/EM-0319.	Historical report connecting the missions and functions of the nuclear weapons facility with the inventory of waste and materials remaining at the site.	January 1997

Ref	Title/Description	Summary	Date
P205A	Nonmixed Waste Determination for IDC 300 Waste (Graphite Molds). INEEL/EXT-98-01137.	Summarizes TCLP sampling, headspace sampling, headspace gas sampling, visual examinations, RTR examinations, and AK Knowledge Information used to make nonmixed determination for graphite molds.	February 1999
P206A	^{234}U Activity with Respect to Total Alpha Activity. INEEL/INT-98001268, EDF-RWMC-1045.	Reviews the results of the U-234 content in all drums processed at the RWMC from September 25, 1997 through September 18, 1998.	March 1999
P208A	Hydrogen Permeability Through Taped and Untapped "Clam Shell" Containers Used at Rocky Flats Environmental Technology Site.	Documents the fact that clam shells are airtight containers greater than 1 liter.	11/11/98
P209A	Radioactive Waste Management Complex Area Map. Drawing No. 175603, Rev. 7, February 24, 2000. Rev. 8, September 18, 2002.	Provides a map of RWMC.	09/18/02
P210A	Default Plutonium Mass Fractions for Rocky Flats Plant Waste. EDF-1242.	This report establishes the plutonium mass fractions used at the INEEL for assaying Rocky Flats Plant transuranic waste. Extensive use was made of historical shipping records. This document is superseded by EDF-1609 (P227).	September 1999
P211A	Waste Stream Profile Form INW276.003-Graphite, transmittal letter (CCN 00-011499) to Jerry Wells, US DOE, dated July 25, 2000, and WSPF Update for WIPP Operation Record dated February 19, 2003.	Submittal of waste stream characterization data for non-mixed graphite waste to the US DOE Idaho Operations Office for submission to DOE-Carlsbad (CAO). The WSPF reconciles applicable data with program-required data quality objectives.	07/25/00
P212A	Waste Stream Profile Form INW276.004-Graphite, transmittal letter (CNN 00-113770) to Jerry Wells, US DOE, dated September 26, 2000, and WSPF Update for WIPP Operating Record, dated February 19, 2003.	Submittal of waste stream characterization data for mixed graphite waste to the US DOE Idaho Operations Office for submission to DOE-Carlsbad (CAO). The WSPF reconciles applicable data with program-required data quality objectives.	09/26/00
P213A	Waste Stream Profile Form INW296.001 Non-special Source Metals, transmittal letter (CNN 00-014770) to Jerry Wells, US DOE, dated October 23, 2000, and WSPF Update for WIPP Operation Record, not dated.	Submittal fo waste stream characterization data for non-special source metals waste to the US DOE Idaho Operations Office for submission to DOE-Carlsbad (CAO). The WSPF reconciles applicable data with program-required data quality objectives.	10/23/00
P214A	Waste Stream Profile Form INW247.001-Raschig Rings and Transmittal Letter (CCN 15439) to Jerry Wells, US DOE.	Submittal of waste stream characterization data for Raschig Rings waste to the US DOE Idaho Operations Office for submission to DOE-Carlsbad (CAO). The WSPF reconciles applicable data with program-required data quality objectives.	11/13/00
P215A	Waste Stream Profile Form INW243.001 – Glass (except Raschig Rings), Transmittal letter (CNN 19871) to Jerry Wells, US DOE, dated March 26, 2001, and WSPF Update for WIPP Operating Record, dated February 19, 2003.	Submittal of waste stream characterization data for Glass waste to the US DOE Idaho Operations Office for submission to DOE-Carlsbad (CAO). The WSPF reconciles applicable data with program-required data quality objectives.	03/26/01
P216A	Waste Stream Profile Form INW211.001-Filters and Insulation, transmittal letter (CNN 21154) to Jerry Wells, US DOE, dated April 26, 2001, and WSPF Update for WIPP Operating Record, not dated.	Submittal of waste stream characterization data for Filters and Insulation waste to the US DOE Idaho Operations Office for submission to DOE-Carlsbad (CAO). The WSPF reconciles applicable data with program-required data quality objectives.	04/26/01

Ref	Title/Description	Summary	Date
P217A	Waste Stream Profile Form INW216.001-First/Second Stage Sludge, Transmittal Letter (CCN 21151) to Jerry Wells, U.S. DOE, dated May 24, 2001, and WSPF Update for WIPP Operating Record, dated February 19, 2003.	Submittal of waste stream characterization data for First/Second Stage Sludge waste to the US DOE Idaho Operations Office for submission to DOE-Carlsbad (CAO). The WSPF reconciles applicable data with program-required data quality objectives.	05/24/01
P218A	Waste Stream Profile Form INW218.001-Building 374 Sludge, Transmittal Letter (CCN 23889) to Jerry Wells, U.S. DOE, dated July 19, 2001, and WSPF Update for WIPP Operating Record, dated February 19, 2003.	Submittal of waste stream characterization data for Building 374 Sludge waste to the US DOE Idaho Operations Office for submission to DOE-Carlsbad (CBFO). The WSPF reconciles applicable data with program-required data quality objectives.	07/19/01
P219A	Hazardous Waste Code Determination for First/Second Stage Sludge Waste Stream (IDCs 001, 002, 800). Arbon R. E., Bechtel BWXT Idaho, LLC. INEEL/EXT-01-00015.	Summarizes INEEL's hazardous waste code determination for IDCs 001, 002, and 800. Incorporates acceptable knowledge, waste form sampling, chemical analyses, and headspace gas data. Also includes an assessment of pre WAP solidified sampling and analysis data (referred to as preliminary data).	May 2001
P220A	Characterization of Rocky Flats Plant Building 374 Sludge Waste Stream (IDCs 007, 803, 807). Arbon, R. E., Sheila Hailey, Joan Connolly, Carolyn Abbott. INEEL/EXT-01-00517.	Summarizes INEEL's hazardous waste code determination for IDCs 007, 803, and 807. Incorporates acceptable knowledge, waste form sampling, chemical analyses, and headspace gas data. Also includes an assessment of pre WAP solidified sampling and analysis data (referred to as preliminary data).	July 2001
P221A	INEEL Acceptable Knowledge Waste Stream Summary Sheet–Graphite. Bechtel BWT Idaho, LLC. EDF-1175, Rev. 0, July 19, 1999. Rev. 1, April 18, 2000. Rev. 2, June 26, 2000. Rev. 3, July 20, 2000. Rev. 4, September 6, 2000. Rev. 5, May 8, 2002. Rev. 6, August 6, 2002. Rev. 7, January 6, 2003.	Summary of characterization data for graphite, combining acceptable knowledge information with INEEL characterization results. Includes a description of the waste stream, packaging, and areas of operation, RCRA characterization, and potential radionuclides.	07/19/99
P222A	INEEL Acceptable Knowledge Waste Stream Summary Sheet–Light Metals. Bechtel BWT Idaho, LLC. EDF-1686, Rev. 0, October 24, 2000. Rev. 1, May 8, 2002; Rev. 2, August 6, 2002; Rev. 3, January 6, 2003.	Summary of characterization data for light metals, combining acceptable knowledge information with INEEL characterization results. Includes a description of the waste stream, packaging, and areas of operation, RCRA characterization, and potential radionuclides.	10/24/00
P223A	INEEL Acceptable Knowledge Waste Stream Summary Sheet–Raschig Rings. Bechtel BWT Idaho, LLC. EDF-1594, Rev. 0, November 7, 2000. Rev. 1, May 8, 2002; Rev. 2, August 6, 2002; Rev. 3, January 6, 2003.	Summary of characterization data for Raschig rings. Combining acceptable knowledge information with INEEL characterization results. Includes a description of the waste stream, packaging, and areas of operation, RCRA characterization, and potential radionuclides.	11/07/00
P224A	INEEL Acceptable Knowledge Waste Stream Summary Sheet–Glass (Except Raschig Rings). Bechtel BWT Idaho, LLC. EDF-1926, Rev. 0, March 26, 2001; Rev. 1, May 8, 2002; Rev. 2, August 6, 2002; Rev. 3, January 6, 2003.	Summary of characterization data for glass, combining acceptable knowledge information with INEEL characterization results. Includes a description of the waste stream, packaging, and areas of operation, RCRA characterization, and potential radionuclides.	03/26/01
P225A	INEEL Acceptable Knowledge Waste Stream Summary Sheet–Filters and Insulation. Bechtel BWT Idaho, LLC. EDF-1927, Rev. 0, May 3, 2001; Rev. 1, May 10, 2001; Rev. 2, June 13, 2001; Rev. 3, May 8, 2002; Rev. 4, August 6, 2002; Rev. 5, January 6, 2003.	Summary of characterization data for filters and insulation, combining acceptable knowledge information with INEEL characterization results. Includes a description of the waste stream, packaging, and areas of operation, RCRA characterization, and potential radionuclides.	05/03/01

Ref	Title/Description	Summary	Date
P226A	INEEL Acceptable Knowledge Waste Stream Summary Sheet–First/Second Stage Sludge. Bechtel BWT Idaho, LLC. EDF-1809, Rev. 0, January 17, 2001. Rev. 1, May 24, 2001.	Summary of characterization data for first/second stage sludge, combining acceptable knowledge information with INEEL characterization results. Includes a description of the waste stream, packaging, and areas of operation, RCRA characterization, and potential radionuclides.	01/17/01
P227A	Plutonium Mass Fractions Derived from SGRS Data. Bechtel BWXT Idaho, LLC. EDF-1609.	Results of a review of plutonium mass fraction data measured by the SWEPP Gamma Ray Spectrometer (SGRS) from September 25, 1997 to August 12, 1999. Includes recommended replacement values used in the analysis of PAN data. The new values supersede the plutonium mass fraction data give in EDF-1242.	12/20/00
P228A	SWEPP PAN Assay System Uncertainty Analysis: Active Mode Measurements of Organic Setups Sludge Waste. INEEL/EXT-2001-00324, Rev. 0.	Results of a total uncertainty analysis of the PAN system's active mode measurements of organic setups sludge waste (waste code 003). The radiochemistry data were obtained from core samples of the waste drums. Recommends the bias correction equation to be applied to uncorrected PAN active mode mass.	May 2001
P229A	SWEPP PAN Assay System Uncertainty Analysis: Active Mode Measurements of Solidified Aqueous Sludge Waste. INEEL/EXT-97-01273.	Results of a total uncertainty analysis of the PAN system's active mode measurements of aqueous sludge waste (IDCs 001, 002, 007, 800, 803, and 807). The radiochemistry data were obtained from core samples of the waste drums. Recommends the bias correction equation to be applied to uncorrected PAN active mode mass.	April 2000
P230A	SWEPP PAN Assay System Uncertainty Analysis: Passive Mode Measurements of Graphite Waste. INEELEXT-97-00812.	Results of a total uncertainty analysis of the PAN system's passive mode measurements of a graphite waste (waste code 300). Describes the methodology used for determining the total uncertainty. Analysis indicates a bias correction does not need to be applied. This report supersedes INEL-95/475, Uncertainty Analysis for the SWEPP Drum Assay System for Graphite Content Code 300.	July 1997
P231A	SWEPP PAN Assay System Uncertainty Analysis: Active Mode Measurements of Graphite Waste. INEEL/EXT-98-01215.	Results of a total uncertainty analysis of the PAN system's active mode measurements of graphite waste (IDC 300). Describes the methodology used for determining the total uncertainty. Recommends the bias correction equation to be applied to uncorrected PAN active mode mass.	December 1998
P232A	SWEPP PAN Assay System Uncertainty Analysis: Passive and Active Mode Measurements of Combustible Waste. INEEL/EXT-2000-01006, Rev. 0, November 2000. INEEL/EXT-2000-01006, Rev. 1, October 2001.	Results of a total uncertainty analysis of the PAN system's passive and active mode measurements of combustible waste (waste codes 300 and 336). Describes the methodology used for determining the total uncertainty. Recommends a bias correction for the PAN passive mode. This report supersedes INEL-96/0257, Uncertainty Analysis of the SWEPP Drum Assay System for Combustible Waste (Content Codes 330 and 336).	November 2000

Ref	Title/Description	Summary	Date
P233A	SWEPP PAN Assay System Uncertainty Analysis: Passive and Active Mode Measurements of Filter Waste. INEEL/EXT-2001-01001.	Results of a total uncertainty analysis of the PAN system's passive and active mode measurements of filters waste (waste codes 328, 335, 338 and 376). Describes the methodology used for determining the total uncertainty. Recommends bias corrections for both passive and active modes.	January 2001
P234A	SWEPP PAN Assay System Uncertainty Analysis: Passive and Active Mode Measurements of Glass Waste. INEEL/EXT-2000-00969.	Results of a total uncertainty analysis of the PAN system's passive and active mode measurements of glass waste (waste code 440). Describes the methodology used for determining the total uncertainty. Recommends bias corrections for both passive and active modes.	July 2000
P235A	SWEPP PAN Assay System Uncertainty Analysis: Passive and Active Mode Measurements of Raschig Rings Waste. INEEL/EXT-2000-01000.	Results of a total uncertainty analysis of the PAN system's passive and active mode measurements of Raschig rings waste (wastes codes 441 and 442). Describes the methodology used for determining the total uncertainty. Recommends bias corrections for both passive and active modes.	July 2000
P236A	SWEPP PAN Assay System Uncertainty Analysis: Passive and Active Mode Measurements of Mixed Metal Waste. INEEL/EXT-99-00939.	Results of a total uncertainty analysis of the PAN system's passive and active mode measurements of mixed metals waste (waste codes 480 and 481). Describes the methodology used for determining the total uncertainty. Recommends bias corrections for both passive and active modes.	October 2000
P237A	Characterization of Wastes Used in the 1991 through 1993 SWEPP Certified Waste Sampling Program. Lockheed Idaho Technologies Company. INEEL/INT-98-01210; EDF-RWMC-1043.	Assigns IDCs and HWNs to seven RFP containers identified as "unknown." Uses results of the SWEPP certified waste sampling programs for FY91, FY92, and FY93 (EDF RWMC-563 and EDF-RWMC-675) as the basis for the IDC and HWN assignments.	04/07/99
P238A	INEEL Acceptable Knowledge Waste Stream Summary Sheet–Building 374 Sludge. Bechtel BWT Idaho, LLC. EDF-2657, Rev. 0, July 26, 2001; Rev. 1, May 8, 2002; Rev. 2, August 6, 2002; Rev. 3, August 29, 2002; Rev. 4, January 6, 2003.	Summary of characterization data for Building 374 sludge, combining acceptable knowledge information with INEEL characterization results. Includes a description of the waste stream, packaging, and areas of operation, RCRA characterization, and potential radionuclides.	07/26/01
P239A	Disagreement with the Assignment of EPA Hazardous Waste Numbers by the Acceptable Knowledge Document, INEL-96/0280. LMITCO. EDF-RWMC-942, Rev. 0; INEL/INT-97-00214, Rev. 0.	Discusses LMITCO's opinions of the assignments of certain EPA hazardous waste numbers to IDCs 330, 337, and 339 in the AK document.	08/14/97
P240A	Document SWEPP NDA Compliance Development. Bechtel BWXT Idaho, LLC. EDF-RWMC-840, Rev. 2, March 6, 2000. Rev. 3, May 10, 2001. Rev. 4, August 6, 2002.	Describes the data assessment and technical review process used to evaluate the SWEPP radioassay data.	03/06/00
P241A	TWCP WIPP WAC Nondestructive Assay Requirements and QAO Compliance Demonstration. EDF-RWMC-843, Rev. 0, June 25, 1997. Rev. 3, April 20, 2000. Rev. 4, November 29, 2001.	QAOs and associated requirements for the SWEPP facility waste assay system and associated techniques.	06/25/97
P242A	RTR Review Process to Support the Total Uncertainty Evaluation. EDF-RWMC-919.	Methodology used to review RTR video tapes and process the Information for use in the uncertainty analysis evaluation.	08/12/97

Ref	Title/Description	Summary	Date
P243A	INEEL CH TRU Waste Certification Capabilities Implementation. EDF-924, Rev. 8, November 26, 2001. Rev. 9, April 8, 2002; Rev. 10, June 20, 2002; Rev. 11, July 18, 2002; Rev. 12, September 25. 2002; Rev. 13, March 3, 2003.	Defines and documents the INEEL's ability to certify individual waste containers for disposal at the WIPP. Revision 11 updated TMU analysis for miscellaneous waste, clarified restrictions to 807a and 807b waste streams, and removed qualification of PAN/Gamma and SGRS Absolute to process IDCs 320, 321, and 339. Revision 12 added limitations for WAGS capability when recalculating IDC 339 waste, and IDCs 320 and 321 were deleted from WAGS qualification. Revision 13 updated the TRUCON codes and information on specific IDCs.	11/26/01
P244A	Zero Matrix Calibration of the SWEPP PAN System. EDF-973, Rev. 3, November 29, 2001. Rev. 4, April 4, 2002.	Reports the results of zero matrix calibration of the SWEPP PAN system during 1997, 1998, 1999, 2000, 2001, and 2002.	11/29/01
P245A	SWEPP Assay System Minimum Detectable Concentration for Solidified Aqueous Sludge Waste Forms. EDF-RWMC-1009.	Applies the minimum detectable concentration (MDC) prescription, given in EDF-843, to drum assays involving SWEPP Assay System and solidified aqueous sludge waste forms.	02/02/98
P246A	Available Inventory for SWEPP Processing for the 3,100 m3 Project. EDF-1402, Rev. 3, March 7, 2002. Rev. 4, April 19, 2002. Rev. 5, April 9, 2003.	Describes the candidate stored contact-handled TRU waste inventory for examination and characterization to meet the 3,100 m^3 Settlement Agreement milestone. Revision 5 documents the inventory (by waste stream) that was shipped by the 3,100 m^3 Project.	02/21/02
P247A	MDC for Glass, Filters, Mixed Metals, Combustibles. EDF-1769 Rev. 0, December 20, 2000. Rev. 1, April 19, 2002.	Reports on the determination of the minimum detectable alpha concentration for waste categories for which total measurement uncertainty analysis has been completed – Glass (IDC 440, 441, 442); Filters (IDCs 328, 335, 338, 360, 376, 490); Mixed Metals (IDCs 480, 481); Combustibles (IDCs 330, 336, 337); and Organic Setup Sludge (IDC 003).	12/20/00
P248A	Extension of the Stored Waste Examination Pilot Plant Passive-Active Neutron Drum Assay System Active-Mode Qualification Range to 47 Grams Plutonium Fissile Gram Equivalent for Solidified Inorganic Sludge Wastes. [Document name changed from Rev. 1, "SWEPP Assay Systems."] RWMC-EDF-2670, Rev. 1, August 16, 2001. Rev. 2, June 27, 2002.	Revision 1 provided analysis and review of (1) historical calibration data up to an effective mass of 31 WGPu for Solidified Aqueous Sludge wastes; (2) applicability of TMU bias corrections for aqueous sludge waste forms to an extended mass range; (3) QAO test performance at an extended calibration range; and (4) Performance Demonstration Program results for Inorganic Aqueous Sludge Waste forms. Revision 2 expanded the SWEPP PAN system active-mode qualification range from 31g WGPu to 50 WGPu (47 g Pu FGE) for Solidified Inorganic Sludge wastes.	08/16/01
P249A	WAGS Absolute Calibration, QAO, TMU, and MDC. EDF-2721, Rev. 0, March 15, 2002. Rev. 1, August 1, 2002. Rev. 2, September 3, 2002.	Documents the WAGS (Waste Assay Gamma Spectrometer) Absolute Assay System calibration method and compliance with QAOs established by the WIPP WAC. Includes analyses for minimum detectable concentration (MDC) and total measurement uncertainty (TMU).	03/15/02
P250A	Generalized MDL-MDC for SWEPP PAN Active Mode. EDF-2986.	Generalized method for determining the nominal transuranic activity minimum detectable concentration and total plutonium mass minimum detectable limit for the SWEPP Passive Active Neutron (PAN) active mode.	02/11/02

Ref	Title/Description	Summary	Date
P251A	Minimum Detectable Concentrations for IDC 004, IDC 700, IDC 801, and IDC 802. EDF-3068.	Calculated MDC values for the subject IDC wastes using SWEPP PAN active mode count data and applying the generalized MDC equation given in EDF-2986.	02/12/02
P252A	Minimum Detectable Concentrations for Miscellaneous Cemented Sludges. EDF-3107, Rev. 0, March 13, 2002. Rev. 1, April 11, 2002.	Calculated MDC values for the subject IDC wastes using SWEPP PAN active mode count data and applying the generalized MDC equation given in EDF-2986. Revision 1 adds IDC 806.	03/13/02
P253A	Minimum Detectable Concentrations for IDCs 320, 321, and 339. EDF-3146.	Calculated MDC values for the subject IDC wastes using SWEPP PAN active mode count data and applying the generalized MDC equation given in EDF-2986.	02/19/02
P254A	SAS Minimum Detectable Concentration for Inorganic Sludge Waste Forms. EDF-RWMC-1035.	Applies the minimum detectable concentration prescription, given in EDF-843, to drum assays involving SWEPP Assay System and inorganic sludge waste forms.	07/27/98
P255A	Uncertainty Analysis for Non-300 Graphite Codes. EDF-1104.	Examines non-IDC 300 graphite wastes (IDCs 301, 303, 310, and 312) and concludes they can be included with IDC 300 under the same uncertainty parameters.	05/05/99
P256A	SAS Minimum Detectable Concentration for Mixed Metals Waste Forms. EDF-1255.	Applies the minimum detectable concentration (MDC) prescription, given in EDF-843 and EDF-1035, to drum assays involving the SWEPP Assay System and mixed metals waste forms. Superseded by EDF-1769 (P247A).	10/19/99
P257A	SWEPP PAN Assay System Uncertainty Analysis: Passive and Active Mode Measurements of Lead-Containing Waste. EDF-3147.	Describes the results of a total uncertainty analysis of the Passive Active Neutron (PAN) system measurements of IDCs 320, 321, and 339. Includes bias correction equation.	02/19/02
P258A	Bias Correction Parameters with Increased Significant Digits for PAN Active Mode Measurements for Graphite Waste. EDF-RWMC-1092.	Reproduction of Appendix B of INEEL/EXT-98-01215 (SWEPP PAN Assay System Uncertainty Analysis: Active Mode Measurements of Graphite Waste). Lists increased significant digits given for all parameters previously documented for PAN active mode measurements of graphite waste.	04/22/99
P259A	Uncertainty Analysis of SWEPP Gamma-Ray Spectrometer System Absolute Plutonium Mass Measurements. INEEL/EXT-01-01204.	Results of a total uncertainty analysis for the SWEPP Gamma-Ray Spectrometer (SGRS) absolute Pu mass measurements for 787 208-liter waste drums from 8 diverse waste types (aqueous sludge, combustibles, glass, graphite, filters, mixed metal, organic sludge, and Raschig rings).	November 2001
P260A	SWEPP PAN Assay System Uncertainty Analysis: Active Mode Measurements of Plastic Waste. INEEL/EXT-01-01392.	Results of a total uncertainty analysis of the Passive Active Neutron (PAN) system's active mode measurements of plastic waste (IDC 337). Includes bias correction equation.	November 2001
P261A	SWEPP PAN Assay System Uncertainty Analysis: Active Mode Measurements of Solidified Organics and Special Setups Waste. INEEL/EXT-01-01590.	Results of a total uncertainty analysis of the Passive Active Neutron (PAN) system's active mode measurements of solidified organics and special setups waste (IDCs 004, 700, 801, and 802). Includes bias correction equation.	December 2001

Ref	Title/Description	Summary	Date
P262A	SWEPP PAN Assay System Uncertainty Analysis: Active Mode Measurements of Miscellaneous Cemented Waste. INEEL/EXT-01-01614.	Results of a total uncertainty analysis of the Passive Active Neutron (PAN) system's active mode measurements of miscellaneous cemented waste (IDCs 290, 292, 432,806, 817, 818, 820, 822, and 823). Includes bias correction equation.	December 2001
P263A	Radioassay Total Uncertainty Process using Modified Statistical Sampling Approach. MCP-2990, Rev. 2, February 29, 2000. Rev. 3, March 22, 2001. Rev. 4, November 20, 2002.	Defines activities for completing the total measurement uncertainty process for debris-type waste forms using modified statistical sampling approach.	02/29/00
P264A	Radioassay Total Uncertainty Process using Statistical Sampling Approach. MCP-2991, Rev. 2, February 29, 2000. Rev. 3, March 22, 2001. Rev. 4, November 8, 2001. Rev. 5, June 5, 2002. Rev. 6, TBD.	Defines activities for completing the total measurement uncertainty process for homogeneous-type waste forms using a statistical sampling approach.	02/29/00
P266A	SWEPP Absolute Gamma Analysis Package (SAP) Software Requirements Specification. INEEL/EXT-01-01365, Rev. 1.	Provides a basis for SAP software development and maintenance. Gives the basic requirements for data acquisition and control, gamma spectrum analysis, and SWEPP-specific analysis.	February 2002
P267A	SWEPP Absolute Analysis Package (SAP) Software Design Description. INEEL/EXT-01-01366, Rev. 1.	Describes the design, functions, input requirements, and output of the main routines and subroutines of the Gamma Control System for Personal Computers (GCPC) and SWEPP RESPMATS Analysis Code (SRAC) computer programs associated with SAP.	February 2002
P268A	SWEPP Absolute Analysis Package (SAP) Calculation Methods. INEEL/EXT-01-01367, Rev. 0.	Provides the basis for SGRS/WAGS development and documents the established calculation methods used in the SAP software. Companion document to the Software Requirements Specification (INEEL/INT-01-01356), Software Design Description (INEEL/INT-01-01366), and Test Plan (INEEL/INT-01-01368) for the SAP software.	February 2002
P269A	SWEPP Absolute Analysis Package (SAP) Software Test Plan and Report. INEEL/INT-01-01368, Rev. 2, February 2002. Rev. 3, April 02, 2002.	Specifies the test plan for GCPC (Gamma Control System for Personal Computers) and SRAC (SWEPP RESPMATS Analysis Code) and reports the results of the tests on the SAP software. Tests and validates the transuranic nuclide mass determination.	February 2002
P270A	SWEPP Absolute Analysis Package (SAP) Users Guide. INEEL/INT-01-01369, Rev. 0.	Describes the operation of the production version of SAP for characterization of waste shipments to the WIPP.	February 2002
P271A	User Guide for the Stand-Alone Version of SRAC. INEEL/INT-01-01537, Rev. 0.	Describes the operation of the non-production version of SRAC, which will be used off-line for total measurement uncertainty and other TRU program support functions.	January 2002
P272A	SWEPP Assay System Version 3.2 Software Requirements Specification. INEEL/EXT-98-00957. Rev. 0, March 2000. Rev. 1, May 18, 2001.	Provides a technical basis for SAS software design, development, verification, and validation. Covers SAS interfaces.	March 2000
P273A	SWEPP Assay System Version 3.2 Design Description. INEEL/EXT-98-00958, Rev. 0.	Provides the foundation for SAS development, verification, and validation conformable to INEEL TRU Programs quality requirements. Covers SAS internal and external interfaces.	March 2000

Ref	Title/Description	Summary	Date
P274A	SWEPP Gamma Analysis Package (SGAP) Software Requirements Specification. INEEL/INT-2000-00289, Rev. 0.	Provides basic requirements for data acquisition and control, gamma spectrum analysis, and SWEPP-specific analysis.	September 2000
P275A	Calibration of SWEPP Radioassay Systems. TPR-1719, Rev. 16, November 30, 2001. Rev. 17, May 20, 2002; Rev. 18, May 20, 2002; Rev. 19, November 15, 2002.	Direction for performance of formal calibration, testing, and evaluation activities for the SWEPP SGRS (SWEPP Gamma-Ray Spectrometer), WAGS (Waste Assay Gamma Spectrometer), and PAN (Passive-Active Neutron) assay systems.	11/30/01
P276A	IDC 339 Mass Attenuation Coefficient Table for SGAP. EDF-2019.	Identifies a set of mass attenuation coefficients to be used for IDC 339 for the calculation of attenuation corrected isotopic mass ratios by the SWEPP Gamma Analysis Program (SGAP).	04/02/02
P277A	Generalized MDL/MDC for SWEPP Absolute Analysis Package (SAP) when Analyzing Spectra from the SWEPP Gamma-Ray Spectrometer (SGRS). EDF-3154, Rev. 0, April 2, 2002; Rev. 1, August 2, 2002.	Documents the results of an evaluation to determine the minimum detectable TRU concentration (MDC) and minimum detectable Pu-239 limit (MDL) for the SGRS when operating as an absolute assay system using the SWEPP Absolute Analysis Package (SAP). Low-activity spectra are re-analyzed to determine posteriori detection limits.	04/02/02
P278A	TWCP WIPP WAC Nondestructive Assay QAO Compliance Testing of the SWEPP Absolute Analysis Package. EDF-3156, Rev. 0, March 11, 2002; Rev. 1, April 2, 2002.	Provides specifications and information necessary to perform the measurement sequences and data analysis and compliance evaluation.	03/11/02
P279A	Uncertainty Analysis Gamma-Ray Spectrometer System Absolute Plutonium Mass Measurements. EDF-1994.	Describes the results of a total uncertainty analysis of the SWEPP SGRS absolute Pu mass measurements for 208 liter waste drums. Includes bias correction equation.	04/02/02
P280A	WAGS Absolute Technical Review Process. EDF-3017, Rev. 0, April 2, 2002; Rev. 1, July 18, 2002; Rev. 2, August 5, 2002.	Describes NDA data generation level assessment and technical review process, for independent technical review (ITR)/expert technical review (ETR), used to evaluate the SWEPP radioassay data.	04/02/02
P281A	WAGS Absolute System Acceptance Test Report. CI-IDA-NDA-013.	Results of testing of WAGS Absolute System. Includes (1) Nuclear Data and References; (2) Calibration Source Certificates; (3)Validation and Verification Raw Data Measurement Reports; (4) Minimum Detectable Concentration Determination Measurement Reports; and (5) Initial Measurement Control Determination Data Reports.	12/10/01
P282A	INEEL Acceptable Knowledge Waste Stream Summary Sheet–Combustibles. Bechtel BWXT Idaho, LLC. EDF-2891, Rev. 0, February 1, 2002. Rev. 1, May 8, 2002; Rev. 2, August 6, 2002; Rev. 3, January 6, 2003.	Summary of characterization data for combustibles, combining acceptable knowledge information with INEEL characterization results. Includes a description of the waste stream, packaging, and areas of operation, RCRA characterization, and potential radionuclides.	02/01/02
P283A	INEEL Acceptable Knowledge Waste Stream Summary Sheet–Plastics. Bechtel BWXT Idaho, LLC. EDF-2944, Rev. 0, February 1, 2002. Rev. 1, May 8, 2002; Rev. 2, August 6, 2002; Rev. 3, January 6, 2003.	Summary of characterization data for plastics, combining acceptable knowledge information with INEEL characterization results. Includes a description of the waste stream, packaging, and areas of operation, RCRA characterization, and potential radionuclides.	02/01/02

Ref	Title/Description	Summary	Date
P284A	Waste Stream Profile Form INW169.001-Combustibles and Transmittal Letter (CCN 29583) from Thomas Monk to Jeff Cotton, Westinghouse TRU Solutions LLC.	Submittal of waste stream characterization data for combustibles waste to Westinghouse TRU solutions for submission to DOE-Carlsbad (CBFO). The WSPF reconciles applicable data with program-required data quality objectives.	02/01/02
P285A	Waste Stream Profile Form INW198.001-Plastics and Transmittal Letter (CCN 29583) to Jeff Cotton, Westinghouse TRU Solutions LLC.	Submittal of waste stream characterization data for plastics waste to Westinghouse TRU solutions for submission to DOE-Carlsbad (CBFO). The WSPF reconciles applicable data with program-required data quality objectives.	02/01/02
P286A	INEEL Acceptable Knowledge Waste Stream Summary Sheet–Miscellaneous Cemented Sludges; Bechtel BWXT Idaho, LLC. EDF-2722, Rev. 1, April 11, 2002; Rev. 2, August 6, 2002; Rev. 3, August 29, 2002; Rev. 4, January 6, 2003.	Summary of characterization data for miscellaneous cemented sludges, combining acceptable knowledge information with INEEL characterization results. Includes a description of the waste stream, packaging, and areas of operation, RCRA characterization, and potential radionuclides.	01/06/03
P287A	Characterization of Rocky Flats Plant Building Miscellaneous Cemented Sludge Waste Stream (IDCs 292 and 807b), INEEL/EXT-02-00112, February, 2002; Rev. 1, March, 2002	Summarizes INEEL's hazardous waste code determination for IDCs 292 and 807b. Incorporates acceptable knowledge, waste form sampling, chemical analyses, and headspace gas data. Also includes an assessment of pre-WAP solidified sampling and analysis data (referred to as preliminary data).	02/01/02
P288A	Waste Stream Profile Form INW222.001-Miscellaneous Cemented Sludges, Transmittal Letter (CCN 31196) to Jerry L. Wells, U.S. DOE, and WSPF Update for WIPP Operating Record (2/19/03).	Submittal of waste stream characterization data for miscellaneous cemented sludges to US DOE for submission to DOE-Carlsbad (CBFO). The WSPF reconciles applicable data with program-required data quality objectives.	04/10/02
P289A	Waste Stream Profile Form and Associated Evaluations for IDC 300. EDF-1180.	Consists of WSPFs IN-W276.001 and IN-W276.002 and associated documentation; and Site Data Summary Report and TIC Evaluation for Lot IN-W276.002.01. This EDF was superseded by WSPFs INW276.003 and INW276.004 and supporting documentation.	04/18/00
P290A	Disposition of Ash Residue Material from the 1969 Building 776 Fire at the Rocky Flats Environmental Technology Site. Prepared by IT Corporation for Safe Sites of Colorado.	This report includes a review of the Backlog Waste Reassessment Baseline Book (BWRBB) to determine the EPA Codes that would apply to waste originating from the 1969 fire in Building 776. The report concludes that EPA Codes D006, D007, D008, F001, F002, F005, F006, F007, and F009 should be assigned to ash waste from the 1969 fire.	02/10/00
P291A	234U Activity with Respect to Total Alpha Activity. EDF-RWMC-1045, Rev. 1.	Reports on the review of 234U content in all drums processed at the RWMC from September 25, 1997 through September 18, 1998. Concludes 234U was not a significant concern in wastes being certified at SWEPP Outlines the modifications to the SAS so that 234U activity is computed and reported on a regular basis.	03/17/99
P292A	RWMC Data Generation Level Data Validation. MCP-1815, Rev. 19, May 20, 2002; Rev. 20, August 7, 2002; Rev. 21, November 20, 2002.	This document provides instructions for the Data Generation Level (DGL) review and validation of data generated for the TWCP. It documents the required review of critical isotopic ratios in radioassay data, as required in EDF-840 (Reference P240A).	05/20/02

Ref	Title/Description	Summary	Date
P293A	Description of SWEPP Gamma Analysis Package (SGAP) Software Calculation Methods. INEEL/INT-2000-00288, Rev. 0.	This document provides the calculations performed by the analysis software associated with the gamma-ray spectrometer systems operated at SWEPP at the Idaho National Engineering and Environmental Laboratory. It includes a description of the methods used to calculate isotopic ratios from measured photopeaks.	September 2000
P294A	SWEPP PAN Assay System Uncertainty Analysis: Passive and Active Mode Measurements of Firebrick Waste. INEEL/EXT-02-00287, Rev. 0.	This report describes the results of a total uncertainty analysis of the Passive Active Neutron (PAN) system measurements of fire brick waste (waste codes 371 and 377).	March 2002
P295A	SWEPP PAN Assay System Uncertainty Analysis: Passive and Active Mode Measurements of Firebrick Waste. EDF-2059, Rev. 0.	This EDF describes the results of a total uncertainty analysis of the Passive Active Neutron (PAN) system measurements of fire brick waste (waste codes 371 and 377).	05/01/02
P296A	SWEPP PAN Assay System Uncertainty Analysis: Active Mode Measurements Of Lead-Miscellaneous Cemented Waste. EDF-1553, Rev. 0.	This report is one of a series of reports quantifying the results of the uncertainty analysis of the PAN system measurements for specific waste types and measurements modes. In particular this report covers active mode measurements of weapons grade plutonium-contaminated miscellaneous cemented waste contained in 208-liter drums (waste codes 290, 292, 432, 806, 807b, 817, 818, 820, 822, and 823).	06/28/02
P297A	Surrogate Matrix Response Evaluation For The SWEPP PAN System. EDF-2957, Rev. 1.	This document describes assay response checks using surrogate matrices with the INEEL Passive Active Neutron (PAN) assay system. The surrogate matrices used were Graphite (Item Description Code [IDC] 300) for production year 2000, Combustibles (IDC 330) for production year 2001, and Mixed Metals (IDC 480/481) for production year 2002. The data for the response check was collected on 16 March 2000, 8-9 January 2001 and 10-11 January 2002 using INEEL Transuranic Waste Characterization Program Technical Procedure (TPR) 1719.	04/19/02
P298A	Waste Assay Gamma-Ray Spectrometer (WAGS) Absolute System Description. SDD-105, Rev. 0.	This document describes the Waste Assay Gamma Spectrometer (WAGS) Absolute Assay System. Results from the WAGS Absolute Assay System do not require further analysis by a Neutron Assay System such as a passive-active neutron (PAN).	04/05/02
P299A	Overview of SAS V3.3 Software Changes. EDF-2775, Rev. 0.	This document describes modifications made to Version 3.3 of the PAN system's application software, SAS (short for SWEPP Assay System). The described modifications were made to correct one minor error, enhance the user interface and to add additional analysis capabilities.	02/07/02
P300A	SWEPP Gamma Analysis Package (SGAP) Software Test Plan and Report. INEEL/INT-2000-00290, Rev. 1.	This document presents the test plan and report for the Windows NT 4.0 acquisition and analysis software package called SGAP associated with the SGRS and WAGS systems. It supersedes all prior test plans and reports.	January 2001

Ref	Title/Description	Summary	Date
P301A	SWEPP Gamma Analysis Package (SGAP) Software Design Description. INEEL/EXT-2000-00287, Rev. 0.	This document describes the SWEPP Gamma Ray Spectrometer (SGRS)/Waste Assay Gamma Spectrometer (WAGS) Gamma Analysis Package software associated with the gamma ray spectrometer systems operated at the SWEPP. These passive gamma-ray assay systems were developed as non-intrusive methods for determining the relative quantities of actinide isotopes in 208-L waste drums.	September 2000
P302A	Effect of Background on SGRS Assay Results and the Determination of Default Isotopic LLDs for the SGRS. EDF-2018, Rev. 0.	The first part of this EDF reports on the effect of background gamma spectrum peaks on quantitative results generated by the SGRS. The second part of this EDF addresses the determination of default level of detection (LLDs) for isotopes normally found in INEEL TRU Waste. The default LLDs were derived from separate analyses of background spectra contained in this EDF.	08/02/02
P303A	Description of the SWEPP Certified Waste Sampling Program. RWMC-EDF-363, Rev. 0, May 19, 1989; Rev. 7, April 16, 1997; Rev. 8, Not Dated; Rev. 9, Not Dated; Rev. 11, July 28, 1998; Rev. 12, April 20, 1999; Rev. 13, Not Dated; Rev. 14, March 28, 2000; Rev. 15, June 28, 2000; Rev. 16, December 5, 2000; Rev. 17, August 2, 2001; Rev. 18, August 2, 2002; Rev. 19, August 29, 2002; Rev. 20, October 22, 2002; Rev. 21, November 20, 2002.	Establishes the requirements and verification sampling frequency for the SWEPP Visual Examination Certified Waste Sampling Program. Included with this record is a letter from T. L. Clements dated December 20, 2002, transmitting revisions 0, 7, 8, 9, and 11 through 20 for use by BNFL. The remaining revisions were obtained as a part of the AK record inventory for the 3,100 m3 Project.	05/19/89
P304A	Transuranic Waste Sampling Plan for the Idaho National Engineering and Environmental Laboratory. EDF-909, Rev. 0, November 18, 1996. Rev. 1, January 12, 1998. Rev. 2, September 3, 1998. Rev. 3, November 9, 2000.	Documents the homogeneous solids sampling plan for INEEL 3,100 m3 Project, describes the waste streams to be sampled, and the collection of representative samples from the waste streams.	11/09/00
P305A	Waste Stream Profile Form INW252.001-Leaded Rubber Gloves and Aprons; EDF-2981, Waste Stream Summary Sheet–Leaded Rubber Gloves and Aprons; and Transmittal Letter (CCN 36785) from Thomas Monk to Jerry Wells. EDF-2981, Rev. 0. October 2, 2002; Rev. 1, January 6, 2003.	Submittal of waste stream characterization data for Leaded Rubber Gloves and Aprons waste to the US DOE Idaho Operations Office for submission to DOE-Carlsbad (CBFO). The WSPF reconciles applicable data with program-required data quality objectives.	10/15/02
P306A	Waste Stream Profile Form INW161.001-Fire Brick/Coarse Fire Brick; EDF-3019, Waste Stream Summary Sheet–Fire Brick/Coarse Fire Brick; and Transmittal Letter (CCN 35971) to Jerry Wells. EDF-3019, Rev. 0, September 19, 2002; Rev. 1, January 6, 2003.	Submittal of waste stream characterization data for Fire Brick/Coarse Fire Brick waste to the US DOE Idaho Operations Office for submission to DOE-Carlsbad (CBFO). The WSPF reconciles applicable data with program-required data quality objectives.	09/20/02
P307A	Hazardous Waste Constituents of INEL Contact-Handled Stored Transuranic Waste. EDF-369.	This EDF contains information on the types of hazardous constituents that are expected to be present in the RWMC stored contact handled waste, organized by content code.	05/19/89

Ref	Title/Description	Summary	Date
P308A	RFETS Waste Stream Profile Form for Leaded Drybox Gloves, RF124.01, and associated Characterization Information Summaries and Waste Stream Summaries.	Submittal of waste stream characterization data for Leaded Rubber Gloves waste to the DOE-Carlsbad. The WSPF and associated documentation provide characterization data and AK for the subject waste stream and reconciles applicable data with program-required data quality objectives.	08/14/02
P319A	Idaho National Engineering Laboratory Stored Transuranic Waste Characterization: Nonradiological Hazards Identification.	This report summarizes the available information on the potential non-radiological hazards that might be included in the transuranic wastes stored at the INEEL. Characterization information includes process descriptions, types of waste, and management practices. Generic types of hazards are described.	September 1981
P321A	Comparison of Real Time Radiography (RTR) and Visual Examination Results of the Stored Waste Examination Pilot Plant Certified Waste Sampling Program. EDF-2710; and the associated RTR-VE Database CD dated 12/11/02.	The comparison of RTR and VE results generated from the SWEPP Certified Waste Sampling Program from 1997 to the completion of the 3100 m3 Project is documented. The RTR-VE database is provided on CD in MS Access format.	December 2002
P322A	Radioassay Data Collected During 3,100 Cubic Meter Project. EDF-3374, Rev. 0. RF-P267.	The data presented in this EDF summarize the radioassay data stored in TRIPS. During the life of the 3100 m3 Project, approximately 20,000 containers were assayed with an over all success rate of 82% of containers being labeled as "WIPPOK". More than 30,000 assays were performed among the radioassay systems. Three radioassay systems were in operation during this time period: the Passive-Active Neutron System (PAN), the SWEPP Gamma-ray System (SGRS) and Waste Assay Gamma System (WAGS).	January 2003
P358A	Summary RTR Data Collected During 3,100 m^3 Project. EDF-3395, Rev. 0.	The data presented in this EDF is a summary of the Real Time Radioscopy (RTR) data stored in TRIPS. During the life of the 3,100 m^3 Project approximately 20,000 containers were examined by RTR. The approximate over all success rate, defined by a final, approved status of "WIPPOK" was 89%. Data in this EDF is organized and presented for the individual waste streams unless waste streams had not been planned for the project, in which case, the data is presented by Item Description Code (IDC).	02/03/03
P359A	Summary HSG Data Collected During 3,100 m^3 Project. EDF-3396, Rev. 0.	The data presented in this EDF is a summary of the Headspace Gas (HSG) data generated by the Environmental Chemistry Laboratory (ECL) and stored in TRIPS. During the life of the 3,100 m^3 Project nearly 18,000 containers were sampled and the resulting samples analyzed. The over all success rate, defined by a final approved status of "WIPPOK" was 99.8%. Data in this EDF is organized and presented for the individual waste streams.	02/03/03

Ref	Title/Description	Summary	Date
P360A	Identification of Transuranic Waste Streams. EDF-922, Rev. 1, July 9, 2002. Rev. 2, December 18, 2002.	The method used to combine Rocky Flats Plant (RF) wastes, previously identified by RFP item description codes (IDCs), into single waste streams is presented in this Engineering Design File (EDF). Wastes from one or more IDCs with similar physical composition and the same regulated constituents are grouped under single waste streams. The waste was grouped in this manner to reduce the number of samples that must be collected for Resource Conservation and Recovery Act (RCRA) characterization, to simplify processing during production operations, and to significantly reduce the cost of characterization and processing.	07/09/02
P361A	Chemical Constituents in Transuranic Storage Area (TSA) Waste. EDF-803, Rev. 0. June 12, 1995. Rev. 1, July 10, 1996. Rev. 2. August 12, 1997. Rev. 3. April 4, 1998. Rev. 4. October 30, 2000. Rev. 5. September 17, 2001. Rev. 6. August 1, 2002. Rev. 7. December 18, 2002.	A comprehensive list of chemical constituents determined, or suspected, to be present in TRU wastes stored at the TSA at RWMC. Some of the characterization data in EDF-803 was used to develop EDF-199, AMWTP Waste Stream Designations.	June 1995 to December 2002
P362A	Contact-Handled TRU Waste Acceptance Criteria for the Waste Isolation Pilot Plant. WIPP/DOE-02-3122.	Waste acceptance criteria applicable to the transportation, storage, and disposal of contact-handled transuranic waste at the WIPP.	
P364A	Estimated Earthen and Geofabric Covered TRU Waste Inventory in the TSA at Radioactive Waste Management Complex (RWMC).	Cell-by-cell estimate of the earthen-covered and geofabric-covered waste inventory in the RWMC TSA by Content Code (IDC).	08/24/95
P367A	Procedure for Packaging and Handling Pu Waste and Residue Drums. Procedure No. 9257.	Describes methods for preparing, loading, sealing, and labeling drums with Pu-contaminated waste and residues. Includes lists of waste/residue IDCs and 2-digit building prefixes in use at the time.	03/29/74
P368A	Acceptable Knowledge Document for INEEL Stored Transuranic Waste – Rocky Flats Plant Waste. INEL-96/0280. Rev. 0, October 1996; Rev. 1, August 19, 1997; Rev. 2, January 23, 1998; Rev. 3, February 28, 2003. (See P649A).	A summary of acceptable knowledge (AK) and its supporting documentation for waste generated at Rocky Flats that was sent to the INEEL for storage. The document covers waste containers currently in the INEEL accessible storage inventory as well as those containers characterized and sent to the WIPP facility for disposal during the 3,100 m3 Project. AK includes information relating to plant history, process operations, and waste management, in addition to waste-specific data.	02/28/03

Ref	Title/Description	Summary	Date
P369A	Pu Recovery Processing System. CHOP-9248-80-03.	Description of the various plutonium recovery processes in Building 771. Good process flow diagram for the overall recovery process as well as several diagrams of individual process systems.	May 1980
P370A	Packaging and Handling Plutonium Waste and Residues (U). CO-1073-A.	Procedure for preparing, packaging, and handling drums and packages with Pu-contaminated wastes and residues. Descriptions of packaging configurations for drums indicate that rigid liners were not required to be used in drums containing IDCs 330, 336, 337, and 338.	08/08/77
P371A	Packaging Wastes for Shipment Off-Site (U). CO-4034-A.	Minimum requirements for packaging various categories of solid wastes for shipment from the Rocky Flats Plant. Includes packaging of wastes contaminated with radioisotopes and beryllium.	09/02/77
P372A	Packaging Wastes for Shipment Offsite (U). WO-4034-A.	Describes procedures for handling and packaging transuranic and low-level waste for offsite shipment.	08/16/85
P373A	Historical Release Report (HRR) for Buildings 371, 444, 447, 460, 707, 771, 776/777, 881, 883, and 991.	Good review of the RF buildings and processes in which plutonium, uranium, stainless steel, and beryllium manufacturing operations occurred. Compilation of historical data (1951-1994) from a variety of sources, such as WSRIC and the ChemRisk Project Task reports. Includes historical timeline for each building.	11/01/94
P393A	Advanced Mixed Waste Treatment Project Waste Stream Designations, AMWTP-RPT-TRUW-12 (previously versions identified as AMWTP-EDF-199 or BNFL-5232-RPT-TRUW-12).	Document that establishes waste matrix code assignments, waste stream designations, and hazardous waste constituents. Hazardous waste number assignments are documented in each approved Waste Stream Profile Form. It also describes anticipated facility generated waste and the item description codes to be applied. This document was re-issued as a report (RPT-TRUW-12) to comply with current AMWTP project criteria for document preparation and usage.	current revision
P397A	Aqueous and Oil/Organic Liquid TRU Waste Solidification Method Test Plan and Report. PRO-1582-PQP/PQR, Rev. 0.	Testing and analysis of various bonding agents by Rocky Flats to determine the best materials to absorb aqueous and organic/oil liquids. This report will be used to determine materials to be used on waste processed/treated by the AMWTP.	09/12/02
P398A	Determination of Radioisotopic Content in TRU Waste Based on Acceptable Knowledge, AMWTP- RPT-TRUW-07: (previously versions identified as BNFL-5232-RPT-TRUW-07).	Provides the radiological composition of TRU wastes that will be characterized by BNFL. The report presently addresses wastes originating from Rocky Flats and from Mound Laboratory.	current revision
P399A	AMWTP Waste Matrix Code Reference Manual, AMWTP-RPT-TRUW-05. (previous revisions identified as BNFL-5232-RPT-TRUW-05).	Provides waste matrix code information and describes expected packaging configurations and material parameters for each waste material to be characterized by the AMWTP.	current revision
P400A	AMWTP TRU Waste Management Acceptable Knowledge Elements: AMWTP Baseline AK for Newly Generated Waste, AMWTP-RPT-TRUW-06: (previous revisions identified as BNFL-5232-RPT-TRUW-06).	Baseline acceptable knowledge information for the AMWTP as required by the WIPP CH WAP and WAC. Includes a baseline inventory of all retrievably and accessibly stored wastes to be processed by the AMWTP.	current revision

Ref	Title/Description	Summary	Date
P402A	BNINW216 First/Second Stage Sludge Waste Stream Profile Package.	Characterization information for waste stream BNINW216 (First/Second Stage Sludge generated at Rocky Flats) submitted to and approved by CBFO.	07/05/12
P407A	Real-Time Radiography Operations (Drum) BNFL INST-OI-12, 2/7/05.	This real-time radiography (RTR) procedure is used by AMWTP to verify the physical form of waste, and to verify absence of prohibited items such as liquids and containerized gases. RTR examination of containers verifies specific waste matrix code and waste stream description, identifies prohibited items, and estimates each waste material parameter weight. RTR also can be used to assign IDCs in the case of unlabeled containers. Note: The source document for this record is included in P407A Rev. 0 on EDMS, and may not be the most current version. The current version of the source document is located on Orion. P407A Rev. 1 issued to update AK Elements.	
P419A	Engineering Design File for 83-Gal Recovery-Retrieval List. EDF-2138, Rev. 0.	The EDF provides the justification for selecting additional 83-gallon drums for removal and recovery of the overpacked 55-gallon drums for inclusion as shippable containers to WIPP during the 3100 project. The population includes 242 drums consisting of IDCs 001, 007, 300, 301, 303, 320, 330, 336, 337, 339, 371, 376, 440, 441, 442, 480, 800.	07/18/02
P420A	BNINW218 Building 374 Sludge Waste Stream Profile Package.	Characterization information for waste stream BNINW218 (Building 374 sludge generated at Rocky Flats) submitted to and approved by CBFO.	07/31/13
P421A	Evaluation of Characterization Data Associated with 74 AMWTP Containers of Rocky Flats First/Second Stage Sludge Waste, BNFL-5232-RPT-TRUW-21, August 9, 2004.	The evaluation of the characterization information presented for the 74 AMWTP listed containers provides justification for confirmation that the waste is part of the waste stream profile for Rocky Flats First/Second Stage Sludge.	08/09/04
P422A	Evaluation of Characterization Data Associated with 29 AMWTP Containers of Rocky Flats Building 374 Sludge Waste, BNFL-5232-RPT-TRUW-22, August 9, 2004.	The evaluation of the characterization information presented for the 29 AMWTP listed containers provides justification for confirmation that the waste is part of the waste stream profile for Rocky Flats Building 374 Sludge.	08/09/04
P424A	Lot Population Determination for Waste Stream Profiles BNINW216 and BNINW218 BNFL-5232-RPT-TRUW-19, Rev 0, July 20, 2004.	Details the review of available information that was performed to ascertain the containers that were not on the original lot lists generated from a sampling plan by the previous contractor for Waste Stream 216 (Rocky Flats first and second sludge) and Waste Stream 218 (Rock Flats Building 374 sludge). Document is provided as a pdf file on Compact Disk.	07/20/04
P425A	Material Safety Data Sheets for Oakite 360 L, (May 18, 1992); Oakite Aluminum Cleaner 164, (January 4, 1990); Oakite Dynadet, (March 27, 1992); Oakite Super Rustripper (October 1, 1999).	MSDSs for Oakite cleaning products used at Rocky Flats.	01/04/90
P426A	Material Safety Data Sheet for Oil Dri© Floor Absorbent. Oil-Dri Corporation of America.	MSDS for Oil-Dri ® Floor Absorbent consisting of bentonite, used at Rocky Flats.	07/21/88

Ref	Title/Description	Summary	Date
P427A	Material Safety Data Sheets for Oil Dri. Portage Broom & Brush Co., Inc.	MSDS for Oil Dri absorbent consisting of a calcium aluminum silicate with a formula of attapulgite montmorillonite diatomaceous mineral.	Not dated
P428A	Material Safety Data Sheet for Polymer 1192. Betz Laboratories, Inc.	MSDS for Polymer 1192, used at Rocky Flats.	August 1985
P429A	Material Safety Data Sheet for Portland Cement. Lone Star Industries, Inc.	MSDS for Portland Cement. Portland Cement was used at Rocky Flats as an absorbent and a solidification agent.	08/10/94
P430A	Material Safety Data Sheet for PuriFloc® A23 Flocculent. Van Waters & Rogers Inc.	MSDS for flocculent used at Rocky Flats.	August 1989
P431A	Waste Stream Profile Form RF107.01. TRM Solidified Inorganic Waste.	RFETS waste stream profile for the TRM solidified Inorganic Waste. Includes the Characterization Information Summary and the AK Summary (RMRS-WIPP-98-100, Sect. 7.24). Establishes RFETS characterization of RF IDC 800 wastes to contain greater than one weight percent beryllium.	06/08/04
P432A	Waste Stream Profile Form RF139.01. Solid cemented sludge.	RFETS waste stream profile for Solid cemented sludge waste. Includes the Characterization Information Summary and the AK Summary (RMRS-WIPP-98-100, Sect. 7.31). The AK Summary indicates that RF IDCs 001 and 002 do not contain beryllium greater than one weight percent.	09/20/04
P435S	RFETS Acceptable Knowledge TRU/TRM Waste Stream Summaries, RMRS-WIPP-98-100.	RFETS acceptable knowledge summaries for the 65 TRU/TRM waste streams characterized by RFETS for shipment of waste from RFETS to WIPP. The report includes individual sections for each waste stream.	04/21/05
P436A	RFETS TRU Waste Acceptable Knowledge Supplemental Information, RF/RMRS-97-018, Revision 18, April 21, 2005.	The document is an acceptable knowledge information document entitled RFETS TRU Waste Acceptable Knowledge Supplemental Information. This document describes the AK process and documents supplemental information, including the references for the sources of this supplemental acceptable knowledge. The topics include radionuclides, defense waste, waste matrix codes linked to IDCs, non-solvent VOCs, pyrophorics, assignment of UHC, RCRA, contaminants in plutonium, moisture in SS&C, and Be in TRU waste.	06/06/05
P439A	BN510 Supercompacted Debris Waste Stream Profile Package.	Characterization information for waste stream BN510 (supercompacted waste generated at AMWTP) submitted to and approved by CBFO.	05/26/05
P440A	Memorandum from Eric Schweinsberg, TRU Program Manager, AMWTP to Kerry Watson, Carlsbad Field Office, "Transmittal of Addendum to Waste Stream Profile BNINW216 - Waste Stream Profile BNINW216 addendum – EPS-069-2004.	This document formally transmits an addendum to WSP BNINW216. It justifies applying the solids data collected from first/second stage sludge to all subsequent lots of first/second stage sludge generated between 1972 and 1988.	08/31/04
P442A	Historical Background Report for Lead-Lined Rocky Flats Plant Waste Shipped to the Idaho National Laboratory from 1971 to 1988, ICP/EXT-04-00632.	AK Background Document for Rocky Flats waste.	February 2005

Ref	Title/Description	Summary	Date
P443A	Historical Background Report for Rocky Flats Plant Waste Shipped to the INEEL and Buried in the SDA from 1954 to 1971, ICP/EXT-04-00248.	AK Background document.	March 2005
P444A	Backlog Waste Reassessment Baseline Book (BWRBB) Waste Form 54.	The Backlog Waste Reassessment Baseline Book Waste Form 54 provides a description of filter and filter waste IDCs/generating processes and RCRA characterization and associated rationale for wastes stored or generated at the site since 1994.	05/09/05
P445A	Determination of H2 Diffusion Rates through Various Closures on TRU Waste Bag-Out Bags, LA-13616-MS, Phillip D. Noll, Jr., E. Larry Callis, and Kirsten M. Norman.	Presentation and discussion of the determination of the amount of H2 diffusion through several closure methods used on TRU waste bag-out bags. Diffusion experiments were performed at LANL on the closure methods to compare the diffusion rates between the closures and determine if they were greater or less than the accepted value presented in the TRUPACT II SAR. Diffusion rates for wire tie closures were found to not be statistically differenc from the SAR value and that the diffusion rates of plastic tie and horse-tail closures are greater than the accepted value.	June 1999
P448A	RFETS Acceptable Knowledge TRU/TRM Waste Stream Summaries. RMRS-WIPP-98-100, Section 7.23, TRM Filter Debris Wastes (D004 – D011, D022, D029, F001, F002, F005, F006, F007, F009, P030, P098, P099, P106, U003, U103, U108), Profile No. RF110.01, Rev. 2, May 25, 2004.	AK Summary for RF filter debris waste shipped to WIPP by RFETS.	05/24/04
P449A	RFETS Acceptable Knowledge TRU/TRM Waste Stream Summaries. RMRS-WIPP-98-100, Section 7.10, TRM Filter Debris Wastes (D022, F001, F002), Profile No. RF110.05, Rev. 2, August 8, 2003.	AK Summary for RF filter debris waste shipped to WIPP by RFETS.	08/08/03
P450A	Backlog Waste Reassessment Baseline Book (BWRBB) Waste Form 24, Metals.	The Backlog Waste Reassessment Baseline Book Waste Form 24 provides a description of metal waste IDCs/generating processes and RCRA characterization and associated rationale for wastes stored or generated at the site since 1994.	04/13/05
P451A	Backlog Waste Reassessment Baseline Book (BWRBB) Waste Form 25, Heavy Metals.	The Backlog Waste Reassessment Baseline Book Waste Form 25 provides a description of heavy metal waste IDCs/generating processes and RCRA characterization and associated rationale for wastes stored or generated at the site since 1994.	09/27/04
P452A	RFETS Acceptable Knowledge TRU/TRM Waste Stream Summaries. RMRS-WIPP-98-100, Section 7.15, TRM Metal Debris Wastes (D004 – D011, D022, D028, D029, F001, F002, F005, F006, F007, F009, P030, P098, P099, P106, U003, U103, U108), Profile No. RF102.01, Rev. 3.	RFETS Acceptable Knowledge Summary for TRM Metal Debris Wastes (D004 – D011, D022, D028, D029, F001, F002, F005, F006, F007, F009, P030, P098, P099, P106, U003, U103, U108) includes descriptions of waste stream and generating processes, points of generation, WMC code assignment, RCRA hazardous waste characterization, radionuclide information, and transportation information.	03/21/05

Ref	Title/Description	Summary	Date
P453A	RFETS Acceptable Knowledge TRU/TRM Waste Stream Summaries. RMRS-WIPP-98-100, Section 7.9, TRM Metal Debris Wastes (D008), Profile No. RF102.31, Rev. 0.	RFETS Acceptable Knowledge Summary for TRM Metal Debris with Lead Shielding (D008) includes descriptions of waste stream and generating processes, points of generation, WMC code assignment, RCRA hazardous waste characterization, radionuclide information, and transportation information.	02/13/03
P454A	RFETS Acceptable Knowledge TRU/TRM Waste Stream Summaries. RMRS-WIPP-98-100, Section 7.18, TRM Glass Debris Wastes (D005, D008, D009, D022, F001, F002, F005), Profile No. RF104.01, Rev. 1.	AK Summary for RF glass debris waste shipped to WIPP by RFETS. Includes descriptions of waste stream and generating processes, points of generation, WMC code assignment, RCRA hazardous waste characterization, radionuclide information, and transportation information.	04/27/04
P455A	RFETS Acceptable Knowledge TRU/TRM Waste Stream Summaries. RMRS-WIPP-98-100, Section 7.1, TRM Leaded Drybox Gloves (D008), Profile No. RF124.01, Rev. 15.	AK Summary for RF Leaded Drybox Gloves (D008) debris waste shipped to WIPP by RFETS. Includes descriptions of waste stream and generating processes, points of generation, WMC code assignment, RCRA hazardous waste characterization, radionuclide information, and transportation information.	07/10/02
P456A	RFETS Acceptable Knowledge TRU/TRM Waste Stream Summaries. RMRS-WIPP-98-100, Section 7.22, TRM Leaded Drybox Gloves (D008, D022, F001, F002), Profile No. RF124.02, Rev. 2.	AK Summary for RF Leaded Drybox Gloves (D008, D022, D028, F001, F002) debris waste shipped to WIPP by RFETS. Includes descriptions of waste stream and generating processes, points of generation, WMC code assignment, RCRA hazardous waste characterization, radionuclide information, and transportation information.	05/11/04
P460A	RFETS Acceptable Knowledge TRU/TRM Waste Stream Summaries. RMRS-WIPP-98-100, Section 6.15, TRU Resin, Profile No. RF031.01, Rev. 2.	RFETS AK summary for TRU resins. Includes descriptions of waste stream and generating processes, points of generation, WMC assignment, RCRA hazardous waste characterization, radionuclides information, and transportation information.	06/14/04
P461A	BN211 Filter Debris Waste Stream Profile Package.	Characterization information for waste stream BN211 (filter debris waste generated at Rocky Flats) submitted to and approved by CBFO.	09/02/05
P462A	BN296 Metal Debris Waste Stream Profile Package.	Characterization information for waste stream BN 296 (Non-Special Source Metal generated at Rocky Flats) submitted to and approved by CBFO.	09/21/05
P465A	Criteria for Packaging Transuranic Waste for Receipt at the Idaho National Engineering Laboratory Radioactive Waste Management Complex Offsite Generated Waste. IDO-10074, Rev. 1 (See C376A).	Document defines packaging criteria requirements for storage of transuranic radioactive wastes at the INEEL.	June 1980
P486A	BN243 Glass Debris Waste Stream Profile Package.	Characterization information for waste stream BN243 (glass debris generated at Rocky Flats) submitted to and approved by CBFO.	09/28/05
P487A	BN252 Leaded Rubber Debris Waste Stream Profile Package.	Characterization information for waste stream BN252 (leaded rubber debris generated at Rocky Flats) submitted to and approved by CBFO.	07/19/06

Ref	Title/Description	Summary	Date
P488A	RFETS Acceptable Knowledge TRU/TRM Waste Stream Summaries. RMRS-WIPP-98-100, Section 6.6 TRU LECO crucibles and crucible inserts, Profile No. RF006.01 Rev.15.	AK Summary for TRU LECO crucibles debris waste shipped to WIPP by RFETS. Includes descriptions of waste stream and generating processes, points of generation, WMC code assignment, RCRA hazardous waste characterization, radionuclide information, and transportation information.	09/11/00
P489A	RFETS Acceptable Knowledge TRU/TRM Waste Stream Summaries. RMRS-WIPP-98-100, Section 6.68 TRU Ceramic crucibles, Profile No. RF008.01 Rev.15.	AK Summary for TRU Ceramic crucibles debris waste shipped to WIPP by RFETS. Includes descriptions of waste stream and generating processes, points of generation, WMC code assignment, RCRA hazardous waste characterization, radionuclide information, and transportation information.	01/24/05
P490A	RFETS Acceptable Knowledge TRU/TRM Waste Stream Summaries. RMRS-WIPP-98-100, Section 7.5 TRM Firebrick Debris (D004-D011, F001, F002, F005), Profile No. RF115.01 Rev.16.	AK Summary for TRM Firebrick Debris (D004-D011, F001, F002, F005), waste shipped to WIPP by RFETS. Includes descriptions of waste stream and generating processes, points of generation, WMC code assignment, RCRA hazardous waste characterization, radionuclide information, and transportation information.	09/11/00
P491A	RFETS Acceptable Knowledge TRU/TRM Waste Stream Summaries. RMRS-WIPP-98-100, Section 7.44 TRM Grit (D007), Profile No. RF117..01 Rev.0.	AK Summary for TRM Grit (D007) waste shipped to WIPP by RFETS. Includes descriptions of waste stream and generating processes, points of generation, WMC code assignment, RCRA hazardous waste characterization, radionuclide information, and transportation information.	01/19/05
P494A	RFETS Acceptable Knowledge TRU/TRM Waste Stream Summaries. RMRS-WIPP-98-100, Section 7.29 TRM Solidified Inorganic Waste (F001, F002, F005, F006, F007, F009, P030, P098, P099, P106, U003, U103, U108), Profile No. RF107.07 Rev.1.	AK Summary for TRM Solidified Inorganic Waste (F001, F002, F005, F006, F007, F009, P030, P098, P099, P106, U003, U103, U108) waste shipped to WIPP by RFETS. Includes descriptions of waste stream and generating processes, points of generation, WMC code assignment, RCRA hazardous waste characterization, radionuclide information, and transportation information.	08/23/04
P495A	Backlog Waste Reassessment Baseline Book (BWRBB) Waste Form 60.	The Backlog Waste Reassessment Baseline Book Waste Form 60 provides a description of solidified lab waste (IDC RF802), generating processes, RCRA characterization, and associated rationale. Subpopulation 60A, IDC RF802 for wastes stored or generated at the site since 1994.	07/28/04
P496A	WO-4021-C Miscellaneous Aqueous Waste handling and Solidification.		10/12/88
P567A	INEEL Stored Contact-Handled Transuranic Waste Volumes, EDF-2550.	This document lists the containers of stored CH TRU waste at INEEL and compares the data in the Radioactive Waste Management Information System (RWMIS), the Transuranic Waste Management Information System (TWMIS) and the Transuranic Reporting, Inventory Processing System (TRIPS). All IDC's stored at INEEL are listed. Where IDC's define chemicals, they are available.	09/30/02

Ref	Title/Description	Summary	Date
P593A	RFETS Acceptable Knowledge TRU/TRM Waste Stream Summaries. RMRS-WIPP-98-100, Section 7.29, TRM Solidified Inorganic Waste, Profile No. RF107.07, Rev. 1.	RFETS AK summary for TRU cemented resins. Includes descriptions of waste stream and generating processes, points of generation, WMC assignment, RCRA hazardous waste characterization, radionuclides information, and transportation information.	08/23/04
P594A	RFETS Acceptable Knowledge TRU/TRM Waste Stream Summaries. RMRS-WIPP-98-100, Section 6.17, TRU Firebrick Debris Waste, Profile No. RF015.01, Rev 0.	RFETS AK summary for TRU Firebrick debris waste. Includes descriptions of waste stream and generating processes, points of generation, WMC assignment, RCRA hazardous waste characterization, radionuclides information, and transportation information.	11/04/04
P595A	Hanford Site Transuranic Waste Management Waste Specific Acceptable Knowledge Documentation for TRM Incinerator Ash from Rocky Flats Environmental Technology Site, Waste Stream RFETS01, M4T00-DCD-03-062, RFETS01, Revision 2.	Document provides characterization information for RFETS-generated incinerator ash stored at Hanford. RFETS ash was sent to Hanford for plutonium recovery. Document provides process and background information to support assertion that Hanford ash was adequately characterized by RFETS' profile (RF118).	
P599A	Backlog Waste Reassessment Baseline Book, Waste Form 46, Particulate Sludge, PADC-1995-01073.	The Backlog Waste Reassessment Baseline Book Waste Form 46 provides a description of particulate sludge IDCs, generating processes, RCRA characterization and associated rational for wastes stored or generated at the site since 1994.	07/12/04
P601A	Waste Material Characterization Profile 2461.R1; MTRU Laboratory Analytical Waste – WIR by Citation.	Material and Waste Characterization Profile for Laboratory analytical sample waste generated at INTEC from RF waste stored at AMWTP (unused and laboratory-derived) (CPP-602 and CPP-684 labs).	11/02/09
P609A	BN004 Special Setups Waste Stream Profile Package and Change Notice #1.	Characterization information for the waste stream BN004 (special setups generated at Rocky Flats) submitted to and approved by CBFO.	12/28/05, 02/15/07
P610A	BN161 Firebrick Debris Waste, Waste Stream Profile Package.	Characterization information for waste stream BN161 (firebrick debris generated at Rocky Flats) submitted to and approved by CBFO.	12/20/05
P621A	A Technically Useful History of the Critical Mass Laboratory at Rocky Flats, LA-UR-05-3247.	Text gives history of the Critical Mass Laboratory (Building 886) at Rocky Flats from construction in 1964 to final experiments in 1987. Chapters include History of the Rocky Flats Site; Nuclear Criticality Safety at Rocky Flats; Nuclear Fuels; Safety, Security and Safeguards; Anomalous Events; The New Millennium; The Human Side Text deals with history of the 1700 experiments with enriched uranium, weapons-grade plutonium and low-enriched uranium. Book is a historical overview of the facility, describing procedures and documentation. Accidents, spills, maps, diagrams, and pictures are included.	May 2005
P632A	Central Characterization Project Acceptable Knowledge Summary Report for the Idaho National Laboratory Rocky Flats Transuranic Graphite Debris Waste Stream: ID-RF-S5126; CCP-AK-INL-002 Rev. 2.	CCP's AK Summary document for Graphite Debris. Contains information relevant to all required AK elements.	10/20/05

Ref	Title/Description	Summary	Date
P633A	Central Characterization Project Acceptable Knowledge Summary Report for Rocky Flats Combustibles and Plastic Stored at the Idaho National Laboratory: Waste Stream ID-RF-S5300-A; CCP-AK-INL-004 Rev. 1.	CCP's AK Summary document for Combustibles and Plastic. Contains information relevant to all required AK elements.	10/06/05
P634A	Central Characterization Project Acceptable Knowledge Summary Report For Rocky Flats Immobilized Organic Liquids Stored at the Idaho National Laboratory: Waste Streams ID-RF-S3114 and ID-RF-S3150-A; CCP-AK-INL-005 Rev. 1.	CCP's AK Summary document for Immobilized Organic Liquids. Contains information relevant to all required AK elements.	01/04/06
P635A	Central Characterization Project Acceptable Knowledge Summary Report for Rocky Flats Raschig Rings Stored at the Idaho National Laboratory: Waste Stream ID-RF-S5100-A; CCP-AK-INL-006 Rev. 1.	CCP's AK Summary document for Raschig Rings. Contains information relevant to all required AK elements.	10/20/05
P636A	Central Characterization Project Waste Stream Profile Form; Waste Stream profile Number ID-RF-S5126.	CCP's WSPF (including CIS) for Graphite Debris.	11/15/05
P637A	Central Characterization Project Waste Stream Profile Form; Waste Stream profile Number ID-RF-S5300-A.	CCP's WSPF (including CIS) for Combustibles and Plastics.	11/15/05
P638A	Central Characterization Project Waste Stream Profile Form; Waste Stream profile Number ID-RF-S5100-A.	CCP's WSPF (including CIS) for Raschig Rings.	11/15/05
P647A	Central Characterization Project Acceptable Knowledge Summary Report for Waste Retrieved from Designated Areas within the Subsurface Disposal Area at the Idaho National laboratory, CCP-AK-INL-001.	The document (i.e., Central Characterization Project Acceptable Knowledge Summary Report for Waste Retrieved from Designated Areas within the Subsurface Disposal Area at the Idaho National laboratory; CCP-AK-INL-001 Rev. 2 provides an overview of processes that generated waste which were subsequently disposed in the Subsurface disposal area at the INL. The document serves as a baseline document for SDA activities and as such indentifies the waste management and waste stream elements for waste currently being retrieved at the SDA under the INL CERCLA program.	current revision
P649A	Acceptable Knowledge Document for INL Stored Transuranic Waste-Rocky Flats Plant, AMWTP-RTP-TRUW-56 (See P368A).	AMWTP acceptable knowledge report for waste in storage at the INL RWMC that was generated by Rocky Flats Plant.	current revision
P654S	Early Waste Retrieval Final Report.	Details of the facilities, operational activities, results of related studies, cost summary, conclusions, and recommendations pertaining to the Early Waste Retrieval Project at the Idaho National Engineering Laboratory. This project, initiated in FY 1976 and completed at the end of FY 1978, investigated the problems associated with transuranic waste from below ground disposal.	08/00/79

Ref	Title/Description	Summary	Date
P661A	Central Characterization Project Waste Stream Profile Form; WSPF# ID-SDA-DEBRIS.	CCP's WSPF (including CIS and Summation of Aspects of AK Summary Report) for SDA Debris (AMWTP has designated this waste as SD 705, SDA Heterogeneous Debris to allow tracking of containers in WTS).	02/21/07
P665A	Central Characterization Project Waste Stream Profile Form; WSPF# ID-RF-S3150-A.	CCP's WSPF (including CIS and Summation of Aspects of AK Summary Report) for OASIS Waste.	11/15/06
P666A	Central Characterization Project Waste Stream Profile Form; WSPF# ID-RF-S3114.	CCP's WSPF (including CIS and Summation of Aspects of AK Summary Report) for Organic Setups.	11/15/06
P753A	Early Waste Retrieval Interim Report.	Description of FY-1977 Early Waste Retrieval (EWR) project waste retrieval from Pit 2 and Trenches 8 and 10 consisting of loose waste, waste drums, and contaminated soil.	05/01/78
P759S	Summary of Rocky Flats Plant Waste Buried in the Subsurface Disposal Area, ICP/EXT-04-00717.	Characteristics, nomenclature, and generating processes associated with waste shipped from RF to INL from 1954 to 1989. The document focuses on pre-1970 activities but it also provides information on some post-1970 waste.	04/01/05
U001A	The Rocky Flats Historical Public Exposure Studies Phase II: Toxicity Assessment and Risk Characterization (Draft). Technical Memorandum. Task 2. An analysis of Historical Source Term Estimates for Carbon Tetrachloride at the Rocky Flats Plant.	Information on use and release of carbon tetrachloride atRF.	February 1996
U002A	Rocky Flats Dose Reconstruction Project Phase II Toxicity Assessment and Risk Characterization (Draft). Task 2: The Rocky Flats Plant 903 Area Plutonium Source Term Development.	Description of storage waste at the 903 Area. Leakage of Pu contaminated oil/solvent is estimated in this document.	February 1996
U003A	(Draft) Rocky Flats Plant TRU Mixed Waste Plan.	Process information, inventory, and RCRA characterization for RF transuranic wastes in 1989.	01/31/90
U004A	Evaluation of Residue Drum Storage Safety Risks. RO 93-002.	Evaluation of safety concerns with residues stored atRF. Some of the residue IDCs is also generated as transuranic waste.	09/27/93
U005A	Results of the SWEPP Certified Waste Sampling Program for FY-1991. EDF-RWMC-563.	Results from a comparison of nondestructive and visual examination of drums at INEL.	August 1992
U006A	Memorandum to W. D. Reinhart. "Waste Shipment Summary for April Cost Month 1987."	Waste shipment records for April 1987.	04/27/87
U007A	VOC Gas Chromatography/Mass Spectrometry Results. WIPP Experimental Waste Characterization Program data printout.	Volatile organic headspace gas data from wastes stored at RF.	Query data 06/03/94
U008A	Improvements to a 55-Gallon DOT 17C Shipping Container for Alpha-Emitting Transuranium Waste. CRDL-950703-001.	Information on development of rigid liners for 55-gallon drums.	12/29/72
U009A	Characterization of Spent HEPA Filters from Rocky Flats Plant. PSD 86-056.	Information on certification of HEPA filters. The emphasis of the document is on particulate size analysis.	September 1986
U010A	OASIS Solidification and OFF Gas Analysis. PSD88-038.	Study of volatile solvent off gas from OASIS drums.	September 1988

Ref	Title/Description	Summary	Date
U011A	Results of the SWEPP Certified Waste Sampling Program for FY-94 (Draft). RWMC-844.	Comparison of nondestructive examination at SWEPP to visual examination of waste at ANL-W.	1996
U012A	Waste Processing Requests.	Form from waste generators requesting treatment of liquid waste. Treatment information is included in most cases.	1983-1984
U013A	(Draft) Rocky Flats Plant Computer Simulation. User Requirements for Aqueous Recovery Operations Building 771. UNC-AL-TR-24-01. Held by DOE-ID for review.	In-depth descriptions of the Building 771 recovery processes.	1989
U014A	Information and Brief History of Waste Content Codes Associated with the Rocky Flats Plant (with supporting documentation).	Description of revisions, deletions, and additions to RFP IDCs in the 1980s.	03/01/95
U015A	Results of the SWEPP Certified Waste Sampling Program for FY 1992 and FY 1993. RWMC-675.	Comparison of nondestructive examination to visual examination of RFP waste drums at INEL.	1993
U016A	Quantification of Radionuclides. WIPP-0217-RTS-0192.	Information on assay of special nuclear material at RF including gamma and neutron methods.	1988
U017A	J.K. Paynter personal log book excerpt.	Note regarding drum of tritium waste without an IDC record in SWIMS on the log book.	07/07/87
U018A	J.K. Paynter personal log book excerpt.	Note for solvent substitution: trichloroethane – trichloroethylene; perchloroethylene – carbon tetrachloride.	02/08/89
U019A	J.K. Paynter personal log book excerpt.	Note regarding five drums of IDC 480 tritium-contaminated waste.	08/28/87
U020A	Analytical Report for Filter Plenum Samples. Lab Report No. AL586.0679.	Samples taken and analyzed to support that the HEPA filters from the Building 771 plenum were not ignitable, corrosive, or reactive.	09/09/86
U021A	History of RFP IDC Certification.	Chronology of transuranic waste certification activities at RF.	Not Dated
U022A	Analytical reports, documentation, and external letter to Dale Wells, EG&G Idaho, Inc. "Additions to Rocky Flats Transuranic Waste Profiles." 89-RF-0713.	Waste profiles for IDC 342 and IDC 338 from RFP to INEL RWMC.	02/27/89
U023A	Waste profile statement sheets and external letter to Dale Wells, EG&G Idaho, Inc. "Additions to Rocky Flats Transuranic Waste Profiles." 89-RF-1245.	Waste profiles for IDCs 809, 854, 855, and 856, from RFP to INEL.	04/06/89
U024A	RTR Weight Estimations data and internal correspondence to Jerry O'Leary. "Waste Calculations for Bin-Scale Test."	Estimates of drum contents based on RTR examination.	05/10/91
U025A	Rocky Flats Environmental Technology Site Miscellaneous Aqueous Waste Handling and Solidification (Draft). 4-A73-POPM-774-WO-2005.	Draft operating procedure for IDC 802 waste.	02/20/96
U026A	"Rocky Flats Plant TRU Waste Thermal Power Characterization Incremented in 0.05 Watt Segments from 0.05 Watts through > 0.60 Watts." September 1985 through February 1990. Data table produced from SWIMS Database.	Distribution of thermal wattage in transuranic waste. This data table was produced to assess the impacts of wattage limits within the TRUPACT II shipping container.	Not Dated

Ref	Title/Description	Summary	Date
U027A	"Rocky Flats Plant TRU Certified Containers." Data table from the SWIMS Database.	Tabulation of Transuranic waste containers shipped (9/85 – 8/89) and on hand (8/89).	Not Dated
U028A	"X-Ray Radiography Station Data" and "WIPP Container Certification Document." Raw data.	Example RTR data for waste examined at SWEPP.	04/13/93 and 04/14/93
U029A	Volatiles Report 374 and 774 sludge.	Volatile organic results for Building 374/774 sludges. Possible mis-identification of samples based on 13% carbon tetrachloride in aqueous waste.	10/23/88
U030A	VOC Gas Chromatography/Mass Spectrometry Results. WIPP Experimental Waste Characterization Program data printout.	Volatile organic drum headspace data from RF transuranic waste.	Data query 03/27/96
U031A	Rocky Flats Radioactive Waste Flow Diagram.	Flow chart (10/85) of RF radioactive waste flow.	10/01/85
U032A	WSRIC Waste Streams sorted by IDC. WSRIC Database program. Report RWS09. Held at DOE-ID as "Possibly UCNI."	September 1992 sort of the WSRIC Database by IDC. Also, the line-/nonline-generation field is included.	Query data 09/29/92
U033A	Building 774 First Stage Treatment Log Book. Held at DOE-ID as "Possibly UCNI."	Records of liquid transferred via pipeline from Building 771 to Building 774 in 1969.	1969
U034A	Building 774 First Stage Treatment Log Book. Held at DOE-ID as "Possibly UCNI."	Records of liquid transferred from Building 771 to Building 774 in 1989.	1989
U035A	Building 774 First Stage Treatment Log Book. Held at DOE-ID as "Possibly UCNI."	Records of liquid transferred from Building 771 to Building 774 in 1982.	1982
U036A	Building 774 Water Results Log Book. Held at DOE-ID as "Possibly UCNI."	Information on incoming pipeline waste (other than first stage receiving) and outgoing transfers to the ponds and Building 374.	1980-1983
U037A	Building 774 Second Stage Treatment Log Book. Held at DOE-ID as "Possibly UCNI."	Waste treatment information.	1981
U038A	Building 774 First Stage Treatment Log Book. Held at DOE-ID as "Possibly UCNI."	Records of liquid transferred via pipeline from Building 771 to Building 774 in 1984 and 1985.	1984
U039A	Building 774 First Stage Flocculator Samples Log Book. Held at DOE-ID as "Possibly UCNI."	First stage liquid samples and 2nd stage sludge samples.	1968-1970
U040A	Building 774 Low Level Organic and TRU-Waste Organic Waste Log Book. Held at DOE-ID as "Possibly UCNI."	Records for pipeline- and container-received organic waste in Building 774 from various buildings.	1976-1990
U041A	Building 774 Car Log Book. Held at DOE-ID as "Possibly UCNI."	Record of liquid waste transfers from various buildings to the 207 Ponds, Building 374, and Building 774 (during 1982).	1982
U042A	Building 774 Record Book. Held at DOE-ID as "Possibly UCNI."	Log Book to trace estimated fissile contents within treatment tanks.	1985
U043A	Building 774 Set Up Log Book. Held at DOE-ID as "Possibly UCNI."	List of containerized waste treated in Building 774 from 1973 to 1990.	1973-1990
U044A	Building 774 Water Results Log Book. Held at DOE-ID as "Possibly UCNI."		1984-1995
U045A	Monthly Report – Liquid Waste Operations.	Liquid waste processing records from CY 1988, 1989, 1990, and 1991.	1981–1991
U046A	Evaluation of the EPA Code D001, Ignitability; D002, Corrosivity; and D003, Reactivity; Designations for RFP IDCs that are Stored at the INEL.	Technical analysis of wastes assigned EPA codes D001-D003 that are stored at INEL.	02/29/96

Ref	Title/Description	Summary	Date
U047A	A History of the Rocky Flats Plutonium/Actinide Recovery Plant 1952 to 1991 (Draft 10/30/91). Held at DOE-ID as "Possibly UCNI."	Detailed description of the actinide recovery and waste treatment processes atRF.	1991
U048A	Building 374 Log Book for Time Period 12/24/86 to 12/29/88. Held at DOE-ID as "Possibly UCNI."	Log of waste volume, building of generation, radioactive contamination level (total alpha or Pu gram/liter), pH and beryllium results for incoming liquid waste.	1988
U049A	Building 374 Log Book for Time Period 12/26/82 to 12/24/85. Held at DOE-ID as "Possibly UCNI."	Log of waste volume, building of generation, radioactive contamination level (total alpha or Pu gram/liter), pH, and beryllium results for incoming liquid waste.	1985
U050A	Building 374 Log Book for Time Period 04/12/91 to 09/27/93. Held at DOE-ID as "Possibly UCNI."	pH and total alpha contamination results for decontaminated liquid leaving Tanks D826A and B (clarifier).	1993
U051A	Building 371 Log Book for Time Period 04/07/82 to 12/29/85.	Log of waste volume, Pu content, and Am content for liquid waste from Building 371 shipped to Building 374.	1985
U052A	"Graphite Waste – Rocky Flats Environmental Technology Site."	Process summary of graphite waste from Rocky Flats.	Not Dated
U053A	"Building 374 Solidified Sludge, Rocky Flats Environmental Technology Site."	Process summary of Building 374 aqueous sludge.	Not Dated
U054A	Toxicity Characteristic Leaching Procedure Test Results of Cemented Surrogate Analytical Laboratory Solution Waste – Part 2.	Results of TCLP testing of solidified laboratory waste prepared with RCRA metal spiked, surrogate liquid waste.	1994
U055A	Sorting of Radioactive waste at Rocky Flats. Held at DOE-ID as "Possibly UCNI."	Segregating and Sorting of radioactive residues.	02/11/70
U056A	Rocky Flats History of Filter Changes and Plenum Modifications.	Summary of filter changes and plenum modifications (1953 – 1975).	09/01/75
U057A	Building 881. Presentation by Ernie English.	Handout from a presentation by Ernie English of M. H. Chew & Assoc. describing historical processing operations in Building 881.	07/03/96
U059A	Drum Prefix Numbers and Corresponding Material Balance Areas. Held at DOE-ID as "Possibly UCNI."	Drum prefix numbers with corresponding material balance areas (MBA) and MBA title. Provides the building and area from which wastes were generated.	1994, 1991
U060A	Chemical Constituents in Transuranic Storage Area (TSA). EDF-RWMC-803. Held at DOE-ID as "Possibly UCNI."	Provides chemical constituents that are contained in or are suspected to be contained in various wastes stored at the TSA of the RWMC.	2001
U061A	Sampling and Analysis Plan for Pyrochemical Salts. 1-100000-EQA. Held at DOE-ID as "Possibly UCNI."	Sampling and analysis plan (draft) for pyrochemical salts; including inventory description and packaging.	09/31/92
U062A	Presence of Chromium Pyrochemical Salt Residues at Rocky Flats Plant.	KMI Services report concluding that chromium will not be present at regulatory levels.	1993
U063A	Laboratory Analysis Results for Eletrorefining Salt.	Visual inspection and emission spectra results metals in ER salt samples.	12/01/87
U064A	Radioactive Materials Associated with Rocky Flats. Held at DOE-ID as "Possibly UCNI."	Table of radioactive materials.	04/14/77

Ref	Title/Description	Summary	Date
U065A	Radioactive Materials Associated with Rocky Flats. Presentation Slides. Held at DOE-ID as "Possibly UCNI."	Presentation slides for radioactive materials.	03/01/83
U066A	Radionuclides Quantities Received and Dispatched from RFP from 1941 to Present. J003499. Held at DOE-ID as "Possibly UCNI."	Table of Radionuclides.	Not dated
U067A	881-CSL Physical Inventory of Radionuclides. Held at DOE-ID as "Possibly UCNI."	Table of radionuclide materials.	08/14/90
U068A	Analytical Data from Liquid Stabilization Database at Rocky Flats. Held at DOE-ID as "Possibly UCNI."	G/L, CI, isotopic, and metals data for IDCs 070, 400, 401, 400, 503, 508, 527, 533, and 541 (also on disk in Excel spreadsheet).	03/03/97
U069A	Drum Prefix Issue Dates Log Book. Held at DOE-ID as "Possibly UCNI."	Shows drum prefix, corresponding MBA, and dates that a group of extended drum numbers were issued.	1987-1997
U070A	Handbook of the Rocky Flats Plant Production Non-Destructive Assay Systems. Held at DOE-ID as "Possibly UCNI."	Radioassay systems used at Rocky Flats.	June 1984
U071A	Material Balance for Size Reduction Vault. Held at DOE-ID as "Possibly UCNI."	Drums of Rocky Flats waste stored at INEL shipped back to Rocky Flats for visual examination. This material balance log shows the original drum number and new drum number after repackaging in size reduction vault. Repackaged drums were shipped back to INEL.	1984-1985
U072A	Waste Stream and Residue Identification and Characterization of Building 371. Held at DOE-ID as "Possibly UCNI."	Uncontrolled electronic copy of Version 2.0 WSRIC Program, Building Book 371.	September 1990
U073A	Waste Stream and Residue Identification and Characterization Building 559. Volume I. Held at DOE-ID as "Possibly UCNI."	Uncontrolled electronic copy of Version 2.0 WSRIC Program, Building Book 559.	September 1990
U074A	Waste Stream and Residue Identification and Characterization Building 707. Volume I. Held at DOE-ID as "Possibly UCNI."	Uncontrolled electronic copy of Version 2.0 WSRIC Program, Building Book 707.	September 1990
U075A	Waste Stream and Residue Identification and Characterization Building 771. Volume I. Held at DOE-ID as "Possibly UCNI."	Uncontrolled electronic copy of Version 1.0 WSRIC Program, Building Book 771.	August 1990
U076A	Waste Stream and Residue Identification and Characterization Building 774. Held at DOE-ID as "Possibly UCNI."	Uncontrolled electronic copy of Version 1.0 WSRIC Program, Building Book 774.	August 1990
U077A	Waste Stream and Residue Identification and Characterization Building 776. Held at DOE-ID as "Possibly UCNI."	Uncontrolled electronic copy of Version 1.0 WSRIC Program, Building Book 776.	August 1990
U078A	Waste Stream and Residue Identification and Characterization Building 777. Volume I. Held at DOE-ID as "Possibly UCNI."	Uncontrolled electronic copy of Version 1.0 WSRIC Program, Building Book 777.	August 1990
U079A	Waste Stream and Residue Identification and Characterization Building 779. Volume I. Held at DOE-ID as "Possibly UCNI."	Uncontrolled electronic copy of Version 1.0 WSRIC Program, Building Book 779.	August 1990
U080A	Waste Stream and Residue Identification and Characterization Building 886. Held at DOE-ID as "Possibly UCNI."	Uncontrolled electronic copy of Version 2.0 WSRIC Program, Building 886.	August 1990

Ref	Title/Description	Summary	Date
U081A	Nuclear Material Transaction Report. Transfer Series: ARF-VAB-000197. Held by DOE-ID for review.	Form 741 shipping records showing IDCs and drum numbers shipped to the Nevada Test Site between 9/18/85 and 2/7/88.	1985-1988
U082A	EG&G Rocky Flats Plant Radionuclide and Hazardous Constituent Reportable Quantity Determination Guide. 1-10000-RQ. Held by DOE-ID for review.	Reportable quantities of hazardous constituents and radionuclides per 49 CFR, Part 172.101 for radioactive wastes at Rocky Flats. Information is summarized by IDC.	12/15/92
U083A	Internal Memorandum from J.T. Gilmartin to J.K. Wrapp, Kaiser-Hill, "Redesignation of Item Description Code (IDC) 393." With unpublished document, "Analysis of IDC 393 for the RCRA Designation D007 Based on Process and Storage Conditions Necessary for Formation and Continued Existence of Hexavalent Chromium (CR+6)." Held by DOE-ID for review.	Justification for removing D007 from SS&C Heel (IDC 393).	08/06/97
U084A	Waste Stream and Residue Identification and Characterization Building 778. Version 3.0.	Uncontrolled copy of archived Version 3.0 WSRIC Building Book 778. Describes acid from Suma tanks in Building 778.	January 1991
U085A	Analytical Data and Summary of Samples from IDC 310 and 312. Held at DOE-ID as "Possibly UCNI."	Analysis of analytical data (IDCs 310 and 312) demonstrating that graphite does not exceed TCLP limits.	01/22/98
U086A	Analytical Data for IDC 411. Includes external correspondence, "Assessment of RCRA Metal Contaminating Plutonium," to Pam Edrich, RMRS Waste Systems. KJP/108/0198.	Data packages and letter supporting that plutonium will not cause TRU and low-level wastes to be RCRA regulated for metals.	01/29/98
U087A	Discrepancy Report to Sheila Hailey, LMITCO. "Graphite Waste." KJP/003/0298. UCNI document held by DOE-ID.	Determination that graphite wastes were not mixed with spent solvents and therefore do not meet the definition of an F-listed hazardous waste. Includes excerpts from various source documents.	02/03/98
U088A	Discrepancy Report to Sheila Hailey, LMITCO. "Evaluation of Potential Sources of RCRA Compounds Found in Graphite Waste Headspace." KJP/114/0298. Held at DOE-ID as "Possibly UCNI."	Assessment of historical use of solvents in the foundry and other potential sources, and RCRA assessment of solvents and metals. References excerpts from various source documents, and includes an interview about 1,4-dioxane, and 1970 report about organics in glovebox atmosphere and analytical data paints and thinners.	02/25/98
U089A	Discrepancy Report to Sheila Hailey, LMITCO. "Assessment of Graphite Waste Matrix and Solvent Usage." KJP/004/0398. Held at DOE-ID as "Possibly UCNI."	Interview conducted to determine if other materials were mixed with graphite waste and how solvents were used in casting operations.	03/03/98
U090A	Letter to Mr. Tom Clements, "Characterization of Graphite Waste." ADR-981-98. Held at DOE-ID as "Possibly UCNI."	Statement from Rocky Flats that graphite molds did not come into contact with hazardous waste. Includes numerous attachments from WSRIC.	07/06/98
U091A	Process Flow Diagrams for IDC 480, Rocky Flats Plant – Waste Stream and Residue Identification and Characterization. Held at DOE-ID as "Possibly UCNI."	Several process flow diagrams for IDC 480. The process flow diagrams pertain to several buildings and processes that generated IDC 480 waste. The diagrams are dated from September 1991 through September 1993. These diagrams may not be applicable to waste generated prior to the dates on the diagrams.	1991 – 1993

Ref	Title/Description	Summary	Date
U092A	Inventory values as generated by TRIPS Change Request (TCR) 1821.	Listing of Rocky Flats 55-gallon drums and original Rocky Flats package dates. The listing includes the drums in accessible storage and those that have been shipped to WIPP. Format is Excel on a CD.	05/22/01
U093A	Backlog Waste Reassessment Rationale for Description Codes 001 and 800, Rev. 2. RFETS. Held at DOE-ID as "Possibly UCNI."	Task 7 description of IDC 001 and IDC 800 waste generation and characterization. Assumed to be "Event 13" referenced in the RFETS Backlog Waste Reassessment Baseline Book.	Not Dated
U094A	Ledger of Acceptable Knowledge Source Documents.	Listing of all acceptable knowledge source documents accumulated for INEEL-stored Rocky Flats Plant Transuranic Waste. Summarized the type of document, document name or title the document number, author/responsible organization and date, if known, and description of the document subject.	03/24/03
U095A	Radiochemistry Data Packages by Waste Form and SPO File Location.	Pointer to the radiochemistry data packages and their locations in the Site Project Office files. One of the uses is to provide a crosswalk to the total measurement uncertainty (TMU) reports.	04/08/02
U096A	EDF 1242 Supporting Documentation. Compiled by Cecilia Hoffman. Held at DOE-ID as "Possibly UCNI."	Supporting documentation used to determine mass ratios calculated in EDF-1242 (AK ref. P210). Includes shipping records, G. W. Twedell notes summarizing shipping records used, plots of the analysis of the shipping records used, RWMC EDF-450 "Specification on Constants Utilized in the Calculation of FGE, PE-Ci and Thermal Power," and memo to C. R. Hoffman from Y. Harker on Performing MDC calculations.	10/11/02
U097A	Response to Inquiry Relating Directly to EDF-RWMC-942 Information and Additional Questions associated with the EDF. White paper prepared by Kenneth L. Gilbert, Ph.D., and Timothy E. Venneman, M. S. Held at DOE-ID as "Possibly UCNI."	Addresses earlier statements made in EDF-RWMC-942 relating to assignment of EPA hazardous waste numbers to certain Rocky Flats waste stored at the INEEL. Discusses and concludes that assignment of EPA HWN D001 is not applicable to combustibles and plastic wastes and leaded gloves that came in contact with nitric acid.	11/01/01
U098A	Preliminary data for the IDC 003 waste stream.	Phase 1 and Phase 2 sampling data.	October 2001
U099A	Draft Waste Stream Profile Form INW164.001-Solidified Organics, and Supporting Documentation.	Draft WSPF prepared by INEEL. Supporting documentation: Characterization of Rocky Flats Plant Solidified Organics Waste Stream (IDCs 700 and 801), INEEL/EXT-02-00028; Waste Stream Summary Sheet-Solidified Organics, EDF-2994.	04/10/02
U100A	Radiography and Visual Examination Results of the Stored Waste Examination Pilot Plan (SWEPP) Certified Waste Sampling program for Fiscal Years 1997, 1998, 1999, and 2000. EDF-2710, DRAFT.	Documents the radiography and visual examination verification results for 298 drums that were visually examined from 1997 through 2000 are Argonne National Laboratory-West. Identifies and discusses drums (4 total) that were miscertified. Includes comparison of radiography and visual data on a drum-by-drum basis, as well as an analysis of weight distribution of contents by drum. This draft contains preliminary data that has not been reviewed and approved for release.	06/21/01

Ref	Title/Description	Summary	Date
U101A	Visual Data Packages for Miscertifications Due to Excess Liquids.	These are the Visual Data Packages for the VEs that resulted in miscertification determinations for the five waste containers due to the presence of liquids in excess of WAC limits. The waste containers were IDRF741205657, IDRF074706786, IDRF741202328, IDRF074701967, and IDRF074704967.	10/21/96
U102A	Acceptable Knowledge (AK) Final Evaluation Checklist INW161.001-Fire Brick/Coarse Fire Brick.	This checklist documents assignment of EPA HWNs and resolution of any discrepancies identified between Acceptable Knowledge (AK) documents, and between AK and characterization/sampling data during development of the WSPF for INW161.001.	09/18/02
U103A	Acceptable Knowledge (AK) Final Evaluation Checklist INW252.001-Leaded Rubber Gloves and Aprons.	This checklist documents assignment of EPA HWNs and resolution of any discrepancies identified between Acceptable Knowledge (AK) documents, and between AK and characterization/sampling data during development of the WSPF for INW252.001.	10/25/02
U104A	Acceptable Knowledge (AK) Final Evaluation Checklist INW216.002-First and Second Stage Sludge Subpopulation.	This checklist documents assignment of EPA HWNs and resolution of any discrepancies identified between Acceptable Knowledge (AK) documents, and between AK and characterization/sampling data during development of the WSPF for INW216.002.	10/25/02
U105A	Apparent Cause Report: Solidified Waste Residual Liquid De-watering Investigation Not Referenced in Acceptable Knowledge Document. CAR-02-078.	This is the apparent cause report about the investigation of why acceptable knowledge (AK) summaries for three sludge waste streams did not contain information related to the solidified waste residual liquid de-watering issue.	September 2002
U106A	Delegation of Site Project Manager Responsibility for Assessment of Flammability for Containers-3100 m3 Project. CNN 35661.	This checklist documents the delegation of Site Project Manager responsibility for the flammability assessment of containers using ETRAMPAC. NCR-29047 is included to support this document.	09/11/02
U107A	Characterization of Rocky Flats Plant Special Setups Sludge Waste (IDCs 004, 802). DRAFT.	Summary of characterization data for Special Setups, combining acceptable knowledge information with INEEL characterization results. Includes a description of the waste stream, packaging, and areas of operation, RCRA characterization, and potential radionuclides.	2002
U108A	RTR/VE Comparison Database for 1983 to 1994.	A database was created to record the comparison of RTR and visual examinations performed from 1983 to 1994. Rationale used to develop the database and data and limitations are described.	Not Dated
U111A	TCLP metals data for leaded glass.	Analytical data for TCLP leachable metals in glass windows. Demonstrates leaded glass leaches at regulated levels for lead.	July 1998

Ref	Title/Description	Summary	Date
U115A	SDVO RCRA Tracking Database (CD-R).	This document consists of three related databases that are compilations of information on drums included in the core sampling program conducted by INEEL for TRU waste characterization. Data in these databases have been validated and the results of the validation and data packages forwarded to the QA record. SDVO RCRA Tracking Database includes container identification and bar codes, waste stream descriptions, core plans, sampling program phase, and analytical batch numbers for each type of analysis performed. Drum data includes information on drum pack dates, bar codes, IDCs, headspace gas data, TICs, and IDC descriptions. Coredata-IDC contains the data from core sample analyses for semi-VOAs, NHVOAs, VOAs, metls, PCBs and RCRA tracking information. Format is MS Access on a CD.	February 2003
U116A	MTD-Drum Experiment System (CD-R).	This document consists of an old Headspace Gas Database. Format is a FoxPro database on a CD. Data are from the Bin Test Program and the Transuranic Waste Characterization Program (TWCP). (Description supplied by S. Hailey.)	February 2003
U119A	(Draft) Rocky Flats Plant Characterization (1954-1980), RWMC-EDF-761, T. L. Clements, Jr. and G. Ross Darnell.	Summary of waste materials generated at the Rocky Flats Plant from 1954 until 1980 and shipped to the INEEL. Includes process descriptions, waste management and packaging practices, and special interest topics such as the 1969 fire. This is a revision of the AK Source Document Review Summary (Form-1068) only. The original source document for this record can be found in Revision 0 of U119A on EDMS.	7/18/1994
U120A	Inventory Analysis of Stored Transuranic (TRU) Waste at the Radioactive Waste Management Complex (RWMC), INEL-96/0308, K. M. Croft and V. S. Scown.	Provides (1970 - 1996) inventory estimated for the retrievably-stored contact-handled and remote-handled TRU contaminated waste stored at the RWMC TSA. Describes the primary data sources (TWMIS and RWMIS) which were used to produce inventory estimates. This document was never published (formerly WM-PD-90-003, Rev. 2).	November 1996
U122A	Container Inventory Report for WMF-629 thru WMF-633.	TRIPS query identifying containers remaining in accessible storage (Type II modules) following completion of the 3,100 m3 Project. Revised to correct date of query and add in generator identifiers for the program element and IDCs.	12/24/02
U127A	Data from the Transuranic Waste Management Information System (TWMIS).	Several spreadsheet databases, providing data for drums shipped to the RWMC between 1971 and 1996. Includes IDCs, package dates, prefixes, container numbers, content codes, radionuclide information, and other container-specific information. TWMIS is available as an Access Database in the Acceptable Knowledge BBWI Databases (Misc) folder. This is a revision of the AK Source Document Review Summary (Form-1068) only. The original source document for this record can be found in Revision 0 of U127A on EDMS.	unknown

Ref	Title/Description	Summary	Date
U128A	Prefix Timeline for Rocky Flats Processes. Prepared by WASTREN, Inc.	Timeline tables matching Rocky Flats prefixes with Building process descriptions. The tables include prefix information not previously available in the AK record. Sources from which the information was obtained are included in the AK record under P367A, P370A, P090A, U059A, and U069A.	2003
U129A	Defense Determination for AMWTP Waste.	Determination that waste generated from processes at RF, MD, and BC were determined to qualify as defense waste for disposal to WIPP. Includes the completed Defense TRU Waste Determination Checklist, and the TRANSURANIC Waste Defense Determination Approval Form.	05/25/05
U175A	Visual Batch Summary Report for Drum #022580 (IDRF002301478), Batch WCV-022580, Rev. 1.	VE summary for an IDC 374 container filled with floor tile.	03/13/02
U176A	Visual Batch Summary Report for Drum #011625 (IDRF001701239), Batch WCV-011625, Rev. 0.	VE summary for an IDC 374 container. Drum could not be opened due to lack of venting.	09/30/02
U215A	Reserved for Pits 11 and 12 Drum retrieval database (RF Load lists for 1970, 1971, and 1972).	Access database of container information from 1970, 1971 and 1972 RF Load lists.	2007
U242A	Containers Certified by 3100 cubic meter Project and Shipped by BNFL.	A list of containers that were certified during the 3100 cubic meter Project and later shipped by BNFL, Inc. to WIPP. The report gives the shipment date and number for each container listed along with the associated waste stream. This report was generated from WWIS.	Not Dated

Appendix B

Summary of AMWTP Inventory

Appendix B
Summary of AMWTP Inventory

Gen.[a]	ID C	Description	Type Storage Module Number Containers P364A, U122A, U242A	TSA-RE Number Containers P364A, U122A	Total Number Containers
RF	000	Unknown	0	2,000	2,000[1]
RF	001	First Stage Sludge	1,410	7,948	9,358
RF	002	Second Stage Sludge	204	11,580	11,784
RF	003	Organic Setups, Oil Solids	2,591	6,276	8,867
RF	004	Special Setups	443	1,580	2,023
RF	005	Evaporator Salts	0	24	24
RF	007	Building 374 Dry Sludge	1,623	0	1,623
RF	010	Paper and Rags			TBD[4]
RF	020	Wood & Benelex			TBD[4]
RF	030	Plastic			TBD[4]
RF	040	Rubber			TBD[4]
RF	050	Metal Scrap			TBD[4]
RF	060	Glass			TBD[4]
RF	070	Graphite			TBD[4]
RF	080	Equipment			TBD[4]
RF	090	Dirt	0	314	314
RF	095	Sewer Sludge	0	44	44
RF	241	Americium Process Residue	1	277	278
RF	290	Filter Sludge	0	5	5
RF	292	Cemented Sludge	197	225	422
RF	300	Graphite Molds	138	1,130	1,268
RF	301	Graphite Cores	2	34	36
RF	302	Benelex and Plexiglas	11	35	46
RF	303	Scarfed Graphite Chunks	6	0	6
RF	310	Graphite Scarfing	2	16	18
RF	311	Graphite Heels	0	11	11
RF	312	Coarse Graphite	1	0	1
RF	320	Heavy Non-special Source Metal	282	453	735
RF	321	Lead	4	0	4
RF	328	Fulflo Incinerator Filters	8	0	8

Gen.[a]	ID C	Description	Type Storage Module Number Containers P364A, U122A, U242A	TSA-RE Number Containers P364A, U122A	Total Number Containers
RF	33A	WETP Bin Program Combustibles A (IDCs, 335, 336, 337, and 339)	1	0	1
RF	33B	WETP Bin Program – Combustibles B (IDCs 330, 337, and 339)	1	0	1
RF	330	Paper and Rags-Dry	763	12,702	13,465
RF	335	Absolute 8 x 8 Filters	16	137	153
RF	336	Paper and Rags-Moist	972	11,277	12,249
RF	337	Plastics, Teflon, Washables, PVC	303	2,894	3,197
RF	338	Insulation and CWS Filter Media	29	341	370
RF	339	Leaded Rubber Gloves and Aprons	141	596	737
RF	360	Insulation	1	486	487
RF	361	Insulation Heel	0	2	2
RF	368	Magnesium Oxide Crucibles	1	0	1
RF	370	Leco Crucibles	3	153	156
RF	371	Fire Brick	68	2,038	2,106
RF	372	Grit	13	5	18
RF	374	Blacktop, Concrete,and Construction Rubble	476	1,114	1,590
RF	375	Oil-Dri	10	15	25
RF	376	Cemented Insulation and Filter Media	518	893	1,411
RF	377	Coarse Fire Brick	1	0	1
RF	391	Crucibles & Sand	5	19	24
RF	392	Sand, Slag & Crucibles	1	11	12
RF	393	Sand, Slag & Crucible Heels	31	17	48
RF	409	Molten Salts-30% Unpulverized	31	0	31
RF	410	Molten Salts-30% Pulverized	0	22	22
RF	411	Electrorefining Salt	19	1	20
RF	412	Gibson Salts	1	0	1
RF	414	Direct Oxide Reduction Salt	5	1	6
RF	416	Zinc Magnesium Alloy Metal	1	0	1
RF	420	Incinerator Ash (Virgin)	1	16	17
RF	421	Ash Heels	0	100	100

Gen.[a]	ID C	Description	Type Storage Module Number Containers P364A, U122A, U242A	TSA-RE Number Containers P364A, U122A	Total Number Containers
RF	422	Soot	10	21	31
RF	425	Fluid Bed Ash	8	0	8
RF	430	Unleached Ion Colum Resin	0	55	55
RF	431	Resin, Leached	0	6	6
RF	432	Resin, Leached and Cemented	89	209	298
RF	44A	WETP Bin Program – Glass (IDCs 440 and 442)	2	0	2
RF	440	Glass	152	1,485	1,637
RF	441	Raschig Rings, Unleached	7	1,648	1,655
RF	442	Raschig Rings, Leached	211	502	713
RF	460	Washables, Rubber, Plastic	0	12	12
RF	463	Leaded Rubber Gloves and Aprons	0	107	107
RF	464	Benelex and Plexiglas	5	86	91
RF	48A	WETP Bin Program – Metals (IDCs 480 and 481)	1	0	1
RF	480	Non-Special Source Metal	1,150	6,528	7,678
RF	481	Leached Non-Special Source Metal	61	806	867
RF	488	Glovebox Parts w/Lead	5	0	5
RF	490	HEPA Filters and CWS Filters	179	1,101	1,280
RF	491	Plenum Prefilters	3	0	3
RF	696	Bldg 771 Cemented Incinerator Sludge	68	0	68
RF	700	OASIS Waste (Organic and Sludge Immobilization System)	60	0	60
RF	741	Pits 11 & 12 First Stage Sludge	0	295	295 [3]
RF	742	Pits 11 & 12 Second Stage Sludge	0	534	534 [3]
RF	743	Pits 11 & 12 Organic Setups	0	1,012	1,012 [3]
RF	744	Pits 11 & 12 Special Setups	0	165	165 [3]
RF	745	Pits 11 & 12Evaporator Salts	0	2,901	2,901 [3]
RF	746	Pits 11 & 12Pad 903 Oil Drums			TBD [3]
RF	747	Pits 11 & 12 Miscellaneous Sludge			TBD [3]

Gen.[a]	ID C	Description	Type Storage Module Number Containers P364A, U122A, U242A	TSA-RE Number Containers P364A, U122A	Total Number Containers
RF	748	Pits 11 & 12 Non-Debris Waste from Non-RF Facilities			TBD [3]
RF	749	Pits 11 & 12 Sewer Sludge	0	65	65 [3]
RF	750	Pits 11 & 12 Debris		10,451	10,451 [3]
RF	751	Pits 11 & 12 Roaster Oxide		1,577	1,577 [3]
RF	752	Pits 11 & 12 Debris waste from Non-RF Facilities			TBD [3]
RF	753	Pits 11 & 12 Legacy Dirt			TBD [3]
RF	754	Pits 11 & 12 Legacy Dirt Waste from Non-RF Facilities			TBD [3]
RF	760	RFP Debris			TBD [5]
RF	800	First Stage Sludge-Cemented	63	0	63
RF	801	Solidified Organics	793	0	793
RF	802	Solidified Laboratory Waste	79	0	79
RF	803	Solidified DCP Sludge	58	0	58
RF	806	Solidified Process Sludge	41	0	41
RF	807	Building 374 Bypass Sludge (After 3/21/87)	257	0	257
RF	817	Cemented SS and C Heels	27	0	27
RF	818	Cemented Incinerator Ash	7	0	7
RF	820	Cemented Soot	27	0	27
RF	822	Cemented Resins	28	0	28
RF	823	Cemented Miscellaneous Sludge	18	0	18
RF	831	Dry Combustibles	71	0	71
RF	832	Wet Combustibles	96	0	96
RF	833	Plastics, TRU Mixed	10	0	10
RF	900	LSA Paper, Plastic, etc.	27	802	829
RF	950	LSA Metal, Glass, etc.	16	847	863
RF	960	Concrete, Asphalt, etc.	55	1,176	1,231
RF	970	Wood	14	118	132
RF	976	Building 776 Process Sludge	0	27	27
RF	978	Laundry Sludge	0	11	11
RF	980	Equipment	0	2	2
RF	990	Dirt	0	720	720

Gen.[a]	ID C	Description	Type Storage Module Number Containers P364A, U122A, U242A	TSA-RE Number Containers P364A, U122A	Total Number Containers
RF	995	Sewer Sludge	0	379	379
RF	9999	Unknown	0	0	0 [2]
		Totals	14,033	98,440	112,473

1. Of the 18,983 containers identified as IDC RF-000 in P365A, 17,000 were distributed to the IDCs created by AMWTP for the waste retrieved from Pits 11 and 12 (e.g., IDC RF-741 through RF-754) overpacked into cargo containers and bins stored on Pad R, Cell 1. The 17,000 containers is based on the volume of drums identified in RPT-TRUW-06, Rev. 2 and was assumed to be the number of containers retrieved from Pits 11 and 12 and placed into cargo containers or bins on Pad R. The total number of containers of IDC 000 identified in P365A was 18,983. The approximately 2,000 difference is assumed to be the containers retrieved from Pit 11 containers that were overpacked into 83-gallon drums and stored on Pad 1. IDC 000 is being retained for these 2,000 containers. (C618A)
2. The containers identified as IDC RF-9999 in P365A were distributed to RF IDCs based on volumes reported in P364A.
3. The number of drums of sludge and salt waste retrieved from Pits 11 and 12 are based on U215A. The remaining volume was identified as debris IDC RF-750 which will be adjusted for any waste assigned the balance of the IDCs (e.g., RF-746, -747, -748, -749, -752, -753, and -754). The number of drums assigned to RF-751 was conservatively adjusted to include all drums identified with Building 444 prefixes.
4. The number of drums assigned two-digit IDCs by RF prior to 1973 was not specifically accounted for within prior RWMC documents. The number of drums that might have been originally assigned a two-digit IDC by RFP (i.e., RF-010) is assumed to have been incorporated into the comparable RFP three digit IDCs as part of P364A estimations (e.g., the number of drums of IDC RF-010 are currently included in the inventory assigned RF-330). In addition, pre-1973 RFP debris waste (including 2-digit IDCs) retrieved from Pad 1, Cells 1 and 2 may be classified as RF-760 (see Footnote 5 below).
5. IDC RF-760 includes all RFP debris waste that was retrieved with insufficient information to assign a specific RF IDC. The waste also includes, but is not limited to loose, repackaged, and/or overpacked RFP debris waste. Waste may include combustibles (e.g., paper, rags, clothing, wood, and plastic), filter paper, CWS filters, HEPA filters, and non-combustibles (e.g., glass, scrap metal, ceramics, graphite, firebrick, equipment, and concrete). Containers of debris waste may also contain <50% by volume RFP soil or non-PCB sludge.

AMWTP Advanced Mixed Waste Treatment Project	**AK Source Document Review Summary**	AMWTP Form1068 Effective Date: 07/17/02, Rev. 1 MP-TRUW-8.13 Page 1 of 1

2006-0166

Reference Number: P415A

T-0507
Record
CB 6-21-05

AK Type:

- ☑ **Published Documentation**
- ☐ **Unpublished Data**
- ☐ **Correspondence**
- ☐ **Discrepancy Report**

Title of Source Document (including author(s), document and revision number, date, etc.): Box Line Operations, Rev. 11, BNFL-5232-INST-FOI-16, 12/14/04

Information Source: Martin Wheeler

AK #[a]	AK Information Summary
WM3 -BN	Describes sorting operations in the north and south box lines, which may identify prohibited items to be treated and managed as newly generated waste.
WS1 WS3 WS4 WS5 WS8 – **Newly Generated** 503, 504, 507, 508, 509, 512	Identifies an area of TRU waste generation; describes the process used, material inputs, and physical form that may be incorporated into newly generated waste streams by means of prohibited item identification and subsequent treatment.

Source Document Data Limitations (if any):

This is an active document that could be revised. The source document that has been included as an AK record may not be the most current available revision.

AK Expert:

Betty J. Tolman / Betty J. Tolman **Date:** 5/26/05

Print **Sign**

[a] **Obtain from Acceptable Knowledge Documentation Checklists (AMWTP Form-1066/AMWTP Form-1067)**

IDAHO NATIONAL ENGINEERING AND ENVIRONMENTAL LABORATORY

ADVANCED MIXED WASTE TREATMENT PROJECT

Box Line Operations

BNFL INC.

12/14/04

Allen Exley for Pat Daly (Signature on File)
BNFL, Inc. AMWTP Operations Manager

12/14/04
Date

Next Periodic Review: March 20, 2007

P415A

REVISION LOG

Revision Number	Date Approved	Pages Affected	Description of Revision
0	03/20/04	All	DCR-2813, Initial issue.
1	04/09/04	pg 14 and others	DCR-2915, Editorial correction pg 14 for note for step 4.4.5.1. Other minor formatting.
2	04/16/04	Pg 19 Step 4.5.2.3	DCR-2952, Minor change to switch lines in table.
3	04/17/04	Pg 14, 16	DCR-2954, Delete unnecessary steps and verbiage.
4	05/17/04	Various	DCR-2979, Changes identified during LMA addressing TrackWise™ Action Items 4839 and 4930.
5	06/17/04	4.5.1.5 4.5.4.3.8 4.5.4.4.3 4.5.4.5.4 4.5.5.2 All	Delete "per Section 4.5.4.1." Change "Home" to "Parked." Change "Normal" to "OFF." Delete redundant step. Delete "Tip box to at least 135° to trip WTS reader at station, then" Correct page numbers.
6	06/30/04	All	DCR-3153. CORR changes.
7	07/29/04	1 and 21	DCR-3213. Minor change. Add ISIH-EA-006 to references and change "foot pedal" to "switch" in Step 4.8.1.3.
8	08/16/04	All	DCR-3244, Change effective date from "Pending DOE Approval of Treatment Facility Operations Startup" to 08/16/04.
9	08/24/04	page 2 and 4.3.3	DCR-3262, Split WTS and FTS into separate prerequisites. Add title of Appendix D to table of contents.
10	12/01/04	7 and 8	DCR-4033, Incorporate steps to implement Form-1608 for manual FGE tracking in the AMWTF.
11	12/14/04	7, 8, 9	DCR-4051, Revised note regarding procedure use for consistency. Reflect changes to Form-1608 and relocate applicable steps from INST-FOI-16 to INST-FOI-14.

TABLE OF CONTENTS

1.0 PURPOSE/SCOPE 1

2.0 REFERENCES 1

3.0 DEFINITIONS 1

4.0 PROCEDURE 4

4.1 Roles and Responsibilities 4

4.2 Precautions and Limitations 5

4.3 Prerequisites and Initial Conditions 7

4.4 Operations 7

4.5 Criticality Cleanout 19

4.6 Incompatible Waste Clean Out 19

4.7 Shutdown 20

4.8 Abnormal and Infrequent Operations 21

5.0 RECORDS 24

6.0 EXHIBITS 24

7.0 APPENDICES 24

Appendix A – Requirements Implemented by INST-FOI-16 ..... A1

Appendix B – OCI Crane Pre-Checks B1

Appendix C – Brokk Error Codes C1

Appendix D – Box Lines Drawings D1

1.0 PURPOSE/SCOPE

This document provides instruction for performing waste sorting operations in the north and south box lines. Box line operations consist of initiating appropriate ICS Master Scheduler sequences and operating necessary equipment to receive, sort/segregate, and export waste.

2.0 REFERENCES

(1) BNFL-5232-NE-006, Criticality Analysis for AMWTF (AMWTF CSA)

(2) BNFL-5232-RPT-ESH-02, AMWTP Documented Safety Analysis (AMWTP DSA)

(3) BNFL-5232-RPT-ESH-03, AMWTP Technical Safety Requirements (AMWTP TSR)

(4) BNFL-5232-RPT-ESH-012, Advanced Mixed Waste Treatment Facility Fire Hazards Analysis (AMWTF FHA)

(5) AMWTP HWMA/RCRA Treatment Permit, INEEL, EPA ID Nos. IDR000002881 and ID4890008952

(6) MP-DOCS-18.2, AMWTP Records Management

(7) BNFL-5232-RPT-ESH-4, The Definition of a Significant Quantity of Contamination for Criticality Control

(8) NFPA 30, Flammable and Combustible Liquids Code

(9) ISIH-EA-Routine Facility Operations-006

3.0 DEFINITIONS

Client Builder Software. Driving software for ICS.

Criticality Working Requirement (AMWTF CWR). Term used to designate requirements of the AMWTF Criticality Safety Analysis.

Emergency Stop (E-Stop). Mechanical "kill" switches that immediately de-energize electrical and/or mechanical equipment in order to protect the operator and ensure equipment safety.

Empty Container. A container or inner liner removed from a container that has held hazardous waste, except a waste that is a compressed gas or that is identified as an acute hazardous waste, can only be considered empty if the following hold true:

1) All wastes have been removed that can be removed using the practices commonly employed to remove materials from that type of container, e.g., pouring, pumping, and aspirating, and
   a. No more than 2.5 cm (1 inch) of residue remain on the bottom of the container or the inner liner, or
      i. No more than 3 percent by weight of the total capacity of the container remains in the container or inner liner if the container is less than or equal to 110 gallons in size, or
      ii. No more than 0.3 percent by weight of the total capacity of the container remains in the container or inner liner if the container is greater than 110 gallons in size.

Additionally, a waste box is considered to be an empty container for criticality control purposes, when it contains less than 15 cm^3 or one golf ball in volume of fissile material.

(HWMA/RCRA Treatment Permit)

Fissile Tracking System (FTS). System comprised of a database and positioned barcode readers designed as an independent and redundant tracking system to WTS.

Integrated Control System (ICS). Computer system that provides control and monitoring of AMWTF waste transport and treatment operations.

Mixed Waste Management Units (MWMUs). Those operable units subject to the requirements of IDAPA 58.01.05.012 [40 CFR §270.14-.27] that manage mixed waste only. The current defined MWMUs for the AMWTF facility include the two box lines, supercompactor, special case waste glovebox system, drum repack system, and those areas defined as storage areas in the treatment permit.

Nuclear Material Safety Limit (NMSL). A safety limit, derived from the Criticality Safety Analysis for the AMWTF, for ensuring Criticality Safety of fissile operations.

OPERATION MODE. The facility, process or equipment is capable of being operated and maintained as intended.

Operational Fire. An operational fire is defined as minor fires and flashes that are within the normal envelope of the processing areas. The operator extinguishes the fire using the contents of a single CO_2 cylinder.

Segregate. To set apart from the general population of waste through the use of physical barriers such as a dike, berm, wall, etc. in order to prevent wastes from commingling.

Separate. To set apart from the general population of waste through the use of distance in order to prevent waste from commingling.

SHUTDOWN MODE. The facility or process is not being operated because of one of the following:

- Unplanned shutdown directed by a DOE management official for safety or other appropriate reasons
- Extended shutdown for 12 months or over
- Substantial process, system or facility modifications, as determined by the restart authority (defined in DOE O 420.1)
- Shutdown because of operations outside the safety basis, or shutdown directed by the client and/or regulator for safety or other appropriate reasons.

SUSPENSION MODE. The facility, process or equipment is not capable of being operated and maintained as intended. If an activity is in SUSPENSION mode, other activities can be in OPERATION.

Visual Examination. A process involving visual observation and documentation required for waste generating and waste drum closure activities for contents verification.

Waste Tracking System (WTS). System comprised of positioned and hand-held barcode readers and an interactive database designed to track waste items and containers with their associated characterization data from point of retrieval to dispatch to WIPP.

4.0 PROCEDURE

4.1 Roles and Responsibilities

4.1.1 Industrial Hygiene/Industrial Safety (IH/IS): Provides technical expertise and oversight.

4.1.2 Operations Technician (OT): Unless otherwise specified, this is the individual performing the steps in this instruction and performs limited radiological surveys.

4.1.3 Radiological Technician (RT): Provides support for operations to include but not limited to performing radiological and industrial hygiene surveys.

4.1.4 Shift Manager (SM): Responsible for the safe and proper conduct of operations. Reports directly to the Production Manager.

4.1.5 Facility Shift Team Leader (FSTL): First line supervisor who receives reports from Operations personnel and coordinates operations and maintenance conducted on the system. Keeps the SM informed.

4.1.6 Independent Technical Reviewer (ITR): Demonstrates or confirms that the process and data satisfies the requirements defined by the MP-TRUW-8.2, AMWTP QAPjP. Validation is documented by signature release.

4.2 Precautions and Limitations

4.2.1 The FTS database shall accurately store assay data for use in the Advanced Mixed Waste Treatment Facility. Failure of the FTS to do so requires the immediate suspension of all container movements into fissile mass control areas in the treatment facility.

(AMWTP LCO 3.3)

4.2.2 The FTS shall prevent the transfer of containers into each fissile mass inventory controlled area in the Advanced Mixed Waste Treatment Facility where either the import of the container would result in the mass limit being exceeded, or where the container does not have a valid assay result. This is achieved via an electrical interlock in all affected areas, with the exception of the packet entry to the SCW glovebox, which will provide audio/visual signals/alarms to the operator indicating whether, or not the transfer is permitted.

(AMWTP LCO 3.5)

4.2.3 The North and South Box lines SHALL each contain less than 465 FGE Pu-239.

(AMWTF TSR) (AMWTP DSA) (AMWTF NMSL)

4.2.4 The fissile mass within a TRU waste drum generated by AMWTF SHALL NOT exceed 380 FGE Pu-239.

(AMWTF NMSL)

4.2.5 Records of inspections and clean out of all areas controlled via an area mass limit SHALL be maintained, i.e.:

a. North and South Box lines,

b. Supercompactor glovebox,

c. Special Case Waste glovebox, and

d. Drum Repack System area.

An independent verification that no significant quantity of material remains after inspection and clean out SHALL be carried out.

(AMWTF CWR)

4.2.6 Both the North and South Box lines SHALL be controlled to less than 370 FGE Pu-239 within each area.

(AMWTF CWR)

4.2.7 Limit box line throughput to 10 boxes per day.

(HWMA/RCRA Treatment Permit)(AMWTF PTC)

4.2.8 In the case where free liquid is present in a sort trough, it is collected using a portable sump pump (DP340201) or cleaned up using other means, such as addition of an absorbent. Liquid collected by the sump pump is transferred into an appropriately labeled container and deposited into a SCW transfer container at an export station or is bagged-out at the bag-out port. Liquid remaining in the sump may be absorbed and/or neutralized. Liquids decanted from boxes, collected using sump pumps or other means, and containerized free liquids are transferred to the SCW glove box for further treatment, as required. Liquids in the boxes or troughs may be absorbed.

(HWMA/RCRA Treatment Permit)

4.2.9 Clean-out is initiated at changes between incompatible waste streams (including unknowns). Clean-out involves emptying relevant sumps and removing visible waste from the area and equipment. Inspect area for residual waste prior to accepting waste from an incompatible waste stream.

(HWMA/RCRA Treatment Permit)

4.2.10 Sorting areas are emptied prior to receiving waste from a different IDC or WG, unless the characterization information or compatibility determinations allows mixing of wastes.

(HWMA/RCRA Treatment Permit)

4.2.11 Personnel must wear leather or Kevlar gloves (over glove box gloves) when using or examining sharp objects, in order to avoid puncturing the glove box gloves and cause personnel injury.

4.3 Prerequisites and Initial Conditions

4.3.1 Ensure Client Builder software is running.

4.3.2 All system E-stops must be disengaged for box line components to be operable.

4.3.3 Ensure WTS is available.

4.3.4 **IF** importing boxes to north or south box lines
OR IF performing criticality cleanout,
THEN ensure FTS is available before performing the operation.

4.3.5 **IF** not already performed for the calendar day,
AND use of the OCI will be required during the shift,
THEN conduct daily preoperational check of the OCI Crane per Appendix B, prior to use, and document satisfactory completion in the narrative log.

4.4 Operations

NOTE: *The following subsections of this procedure may be performed separately, in parallel, out of sequence, or repeated as necessary to meet operational requirements.*

4.4.1 Receive waste boxes.

4.4.1.1 Start the 100 Master Scheduler for north or south box line if necessary and as appropriate.

4.4.1.2 Select the appropriate box receipt sequence.

Box Line	Box Receipt Sequence
North	"200 Receive Box and Clamp in Transport Carriage"
South	"202 Clamp Box into Transport Carriage"

4.4.1.3 **WHEN** the box has been secured into the selected clamping frame,

THEN perform the following:

4.4.1.3.1 Contact the Control Room to ensure that the FGE values have been successfully tracked using Form-1608.

4.4.1.3.2 Ensure that the respective Brokk will not interfere with the tipping frame.

4.4.1.3.3 Transfer the waste box to the appropriate tipping station using the OCI crane.

Drum Replacement at Waste Ports

4.4.2.1 Perform Visual Examination of drum filling and verify contents before export per FOI-17, Facility VE Operations.

4.4.2.2 Ensure port door is closed for waste port drum to be replaced by checking the appropriate mimic screen in ICS.

4.4.2.3 Ensure the 100 Master Scheduler is running.

4.4.2.4 Select the appropriate drum replacement sequence for the desired waste port drums to be replaced:

Box Line Port	Drum Replacement Sequence
North	
East Brokk Port 1	"207 Close Area 1 Stn 1 Port Door & Replace Drum"
East Brokk Port 2	"209 Close Area 1 Stn 2 Port Door & Replace Drum"
West Brokk Port 1	"211 Close Area 2 Stn 1 Port Door & Replace Drum"
West Brokk Port 2	"213 Close Area 2 Stn 2 Port Door & Replace Drum"
Special Case Waste Port	"205 Close WET Port Door & Replace Drum"

South	
Brokk Port 1	"205 Close WES 1 Port Door & Replace Drum"
Brokk Port 2	"207 Close WES 2 Port Door & Replace Drum"
Offline Port 1	"231 Close Port Door & Replace Drum"
Guillotine Port 1	"213 Close WET (East) Stn 1 Port Door & Replace Drum"
Guillotine Port 2	"215 Close WET (East) Stn 2 Port Door & Replace Drum"
Special Case Waste Port	"217 Close WET (West) Stn 1 Port Door & Replace Drum"
Offline Port 2	"219 Close WET (West) Stn 2 Port Door & Replace Drum"

NOTE: *Items from different boxes should not be mixed in SCW drums.*

4.4.3 Sort/segregate waste by performing the following steps for operating equipment as necessary.

4.4.3.1 Tip waste boxes at sorting troughs or off-line station as follows:

4.4.3.1.1 Ensure the Tipping Yoke is "HEALTHY" as provided in the "TIPPER HPP" diagnostic box.

North Box Line		South Box Line	
East	West	East	Offline
330/M/3/001	330/M/3/002	340/M/3/001	340/M/3/002
then 330/M/4/006		then 340/M/4/007	

4.4.3.1.2 Ensure that the Tipping Yoke 330MT001 north (340HP001 south) is placed in MANUAL mode.

4.4.3.1.3 Start the Tipping Yoke via the "TIPPER HPP" device control box.

4.4.3.1.4 Ensure the "TIPPER HPP" diagnostic box indicates "Running."

4.4.3.1.5 Tip the waste box in the desired sorting location by holding the tipper switch in the "TIP" position as necessary until the contents empty,

NOTE 1: *It is acceptable to temporarily halt the tipping operation to view the box contents or remove items from the box as necessary.*

NOTE 2: *At the off-line station, the box is emptied or items are removed using the MSM or PaR. On removal of identified items, the box may be transferred to the Brokk sorting location.*

4.4.3.1.6 **IF** necessary to tip the box farther,

THEN hold the tip switch in the "TIP" position until the contents of the box empties into the trough,

OR repeat tipping sequence as necessary.

4.4.3.1.7 **WHEN** the box is empty,

THEN place the tipper switch in the "RTD" position until the box returns to the upright position.

4.4.3.2 Export Empty Waste Boxes

4.4.3.2.1 Inspect the interior of the waste box to the following criteria:

4.4.3.2.1.1 Visually verify that it does not contain a significant quantity of contamination (less than 15 cm^3 or the size of a golf ball).

(AMWTF CWR)

NOTE: *When visual observation through windows and/or the CCTV system shows that all wastes that can be reasonably removed have been removed, the box is classified as an "empty container" in accordance with HWMA/RCRA (IDAPA 58.01.05.005, 40 CFR 261.7) and is transferred to the box size-reduction area for export from WMF-676. Boxes which do not meet the RCRA empty container requirements will be managed as MW.*

(HWMA/RCRA Treatment Permit)

4.4.3.2.1.2 Verify that the container is an *empty container* (see def.).

(HWMA/RCRA Treatment Permit)

4.4.3.2.2 Confirm waste box status at applicable sorting trough or off-line station as empty as follows:

Sorting Trough	Click "Box Empty" confirmation button on ICS screen.
Off-Line Station	Click "Box Empty" confirmation button on ICS screen.

4.4.3.2.3 **WHEN** no longer needed for operation,

THEN select appropriate mimic screen 340/M/4/007 (south) or 330/M/4/006 (north) to display the Tipping Yoke device controls.

4.4.3.2.4 Stop the Tipping Yoke via "TIPPER HPP" device control box.

4.4.3.2.5 Use OCI Crane to transfer waste box and clamping frame to clamping station.

NOTE: *Initiating the unclamping sequence signals WTS and ICS that the waste box is ready to be exported from the box line area. No other operator actions are necessary.*

4.4.3.2.6 In the Master Scheduler, select the appropriate unclamping sequence as follows:

Box Line	Unclamping Sequence
North	"201 Unclamp Box from Box Transport Carriage"
South	"203 Unclamp Box from Box Tipping Carriage"

4.4.3.3 Operate the Brokk as follows:

WARNING

Mis-operation of the Brokk may result in damage to equipment or to the confinement boundary which may present an immediate exposure hazard to employees.

CAUTION

The Brokk will automatically be de-energized if the PaR is moved into the Brokk operating zone.

NOTE: *There are no additional steps necessary for Brokk operation beyond Start-up to energize the controller. Brokk operation is based on operator qualifications and training.*

4.4.3.3.1 Ensure that the "System Stop" button on the Brokk controller to be used has been reset as indicated by the green VDC light on the controller.

4.4.3.3.2 Energize the controller by pushing the following toggle switches and observing the power indicator lights as follows:

"Extra 1 ON" yellow light

"Extra 2 ON" green light

NOTE: *A safety mechanism exists in the controller that de-energizes the controller after a set period of no activity.*

4.4.3.3.3 Activate the safety valve control by pressing the left side of the toggle switch on the top of the right-hand joystick and observing amber indicator light on the top right of the controller.

4.4.3.3.4 Use the Brokk to sort waste as desired.

CAUTION

Ensure the Brokk is not in the way of the Tipping Yoke if securing Brokk operation.

NOTE: Any prohibited items found in the box as reference in *INST- FOI-17, Facility Visual Examination Operation, Exhibit 5- List of Prohibited Articles, is considered Special Case Waste and is sent to the SCW glove box system for treatment and/or removed from the waste stream in the event the material does not meet the AMWTF Waste Acceptance Criteria.*

4.4.3.3.5 **WHEN** the Brokk is no longer required to be in operation,

THEN place the unit in a safe configuration

AND press the Brokk "System Stop" on the Brokk controller.

4.4.3.4 Operate the PaR as follows:

NOTE 1: *Key for key switch control panel will be needed to place PaR in override to accomplish some operations. Key switch must be returned to normal position and the key removed when task is finished.*

NOTE 2: *An alarm will sound on the ICS alarm panel when key is turned in either position.*

4.4.3.4.1 Ensure that the appropriate PaR Unit 330CP212 (north) or 340CP212 (south) is placed in MANUAL mode.

4.4.3.4.2 Start the PaR Manipulator via the "MANIPULATOR" device control face plate.

4.4.3.4.3 Ensure the "MANIPULATOR" device control box indicates "Running."

4.4.3.4.4 Ensure the Axis Enable Key switch in the PaR control panel to be used is in the "Normal" position or the "Override" position for operation as follows:

"Normal"	• Normal operations within the PaR operating "zone"
"Override"	• Parking operations • Unparking operations • Operations outside of PaR operating "zone"

NOTE: *When one PaR control panel is being used, no other PaR control panel will function in that control room.*

4.4.3.4.5 Press the main power button on the control panel being used to start the unit.

4.4.3.4.6 Ensure the appropriate PaR Manipulator indicates "HEALTHY" as provided in the device control diagnostics face plate.

North Box Line	South Box Line
330/M/3/003	340/M/3/003

NOTE: *PaR will purge for five to 15 minutes before the arm will function. Grip function on the barrel grab works without purge.*

4.4.3.4.7 Use the PaR to sort waste or undertake the remote maintenance or other ad hoc operation as required.

4.4.3.4.8 **WHEN** no longer needed for waste sorting,

THEN place arm in "Parked" position, if attached

OR

IF the arm is not attached,

THEN park PaR by placing the Axis Enable Key switch on the control panel in the "Override" position.

NOTE: *When PaR is no longer needed, place in a safe configuration.*

4.4.3.4.9 Select the appropriate mimic screen to display PaR device controls:

North Box Line	South Box Line
330/M/3/003	340/M/3/003

4.4.3.4.10 Press the "Main Power Off" button on the control panel.

OR

STOP the PaR via the "MANIPULATOR" device control face plate on ICS mimic screen as appropriate.

4.4.3.5 Operate OCI Crane as follows:

CAUTION

The PaR MUST be parked if OCI Crane operations are to be conducted in the PaR operating zone. The Brokk will automatically be de-energized if the OCI Crane is moved into the Brokk operating zone.

NOTE: *Key for key switch on the control panel will be needed to place OCI crane in override to accomplish some operations. Key switch must be returned to OFF position and key removed when task is finished.*

4.4.3.5.1 Ensure the OCI Crane "SYSTEM START" button has been depressed as indicated by the blue panel power light per the appropriate table below.

North Box Line Crane Power Panel	South Box Line Crane Power Panel
CP-330-214	CP-340-214

4.4.3.5.2 Ensure the "Control Station Select" switch on the control panel to be used is "ON" and the panel key switch is in the "OFF" position or the "Override" position for operation as follows:

"OFF"
- Normal operations

"Override"
- Parking operations
- Unparking operations
- Operations outside of crane operating zone.

NOTE: *When one OCI crane control panel is being used, no other crane control panel will function in that control room.*

4.4.3.5.3 Use the OCI crane to perform desired operations.

NOTE: *When crane is no longer needed place in safe configuration.*

4.4.3.6 Automatic Guillotine and Feed Table Operation.

4.4.3.6.1 Start the Guillotine from mimic screen 340/M/4/003.

4.4.3.6.2 **IF** manual advancement of the waste is desired,

THEN perform the following:

4.4.3.6.2.1 Place the waste pusher in MANUAL.

4.4.3.6.2.2 Position the waste pusher on the feed table in the desired location via the device control template.

4.4.3.6.2.3 Ensure the waste pusher is in AUTO.

4.4.3.6.3 Start sequence "234 Crop Object – Reduce Waste Size."

4.4.3.6.4 Enter the desired length of cut in the provided space (must be between 12 and 20 inches in "AUTO").

CAUTION

Failure to stop the Hydraulic Power Pack (HPP) following operation could cause the hydraulic fluid to overheat and thin.

4.4.3.6.5 Upon completion of Guillotine activities, stop the Guillotine via the "GUILLOTINE HPP" device control face plate on ICS mimic screen.

4.4.3.7 Manual Feed Guillotine and Feed Table Operation

4.4.3.7.1 Start the Guillotine via the "GUILLOTINE HPP" device control box (340HP002).

4.4.3.7.2 Ensure the "GUILLOTINE HPP" device control box indicates "Running."

4.4.3.7.3 Position waste in the guillotine via the "WASTE PUSHER" device control face plate, as necessary.

4.4.3.7.4 Close Guillotine Clamp via the "GUILLOTINE CLAMP" device control face plate.

4.4.3.7.5 Close the Guillotine Jaws via the "JAWS" device control face plate.

4.4.3.7.6 Open the Guillotine Jaws via the "JAWS" device control face plate.

4.4.3.7.7 Open the Guillotine Clamp via the "GUILLOTINE CLAMP" device control face plate.

4.4.3.7.8 Repeat positioning of waste and operating of guillotine and jaws as necessary to complete operations.

CAUTION

Failure to stop the HPP following operation could cause the hydraulic fluid to overheat and thin.

4.4.3.7.9 Stop the Guillotine via the "GUILLOTINE HPP" device control face plate on ICS mimic screen.

4.4.3.8 Master Slave Manipulators Operation.

NOTE: *MSM operation is based on operator qualification and training. There is no specified operating sequence.*

4.4.3.8.1 Operate master Slave Manipulators as necessary.

4.5 Criticality Cleanout

NOTE 1: *Following a criticality cleanout and inspection, less than 3000 cm^3 (approximately the size of a soccer ball) of contamination will be allowed to remain in the respective box line area. This number is the maximum allowable and in practice will be kept as low as practical below this amount.*

NOTE 2: *All items transferred out the box line bag out ports shall be packet assayed prior to being placed into an SAA.*

(AMWTF CWR)

4.5.1 Visually inspect the box line mass control area.

4.5.1.1 **IF** significant visible contamination is found,

THEN clean the area to as low as practical not to exceed a total volume of 3000 cm^3 (approximately the size of a soccer ball).

4.5.2 **WHEN** the level of visible contamination does not exceed a total volume of 3000 cm^3 (approximately the size of a soccer ball),

THEN contact the STL.

NOTE: *After inspection and clean-out of either of the North or South box lines, the area mass limit SHALL NOT be set to below 25 FGE Pu-239.*

(AMWTF CWR)

4.5.3 STL: Perform independent verification and reset the WTS and FTS area total for the respective box line to 25 FGE.

4.6 Incompatible Waste Clean Out

NOTE 1: *Incompatible waste includes the following:*

- *Acids, mineral, and oxidizing waste (IDCs 150, 805, 813, 834, an 241)*
- *Oxidizing agents (IDCs 100,805, 811, 813, 834, 005, 241, and 430)*
- *Caustic waste (IDCs 835 and 836)*
- *Halogenated organic waste (IDCs 003, 700, and 801).*

(BNFL-5232-RPT-ESH-014)

NOTE 2: *According to the current chemical compatibility report, halogenated organic waste is incompatible with waste from the other three waste groups. Caustic waste is incompatible with acids, mineral, and oxidizing waste.*

NOTE 3: *A container holding MW that is incompatible with any waste or any material stored nearby shall be segregated (separated by berm, dike, wall, or spill pallet).*

(HWMA/RCRA Treatment Permit)

4.6.1 **IF** the container IDC is 000, 003, 005, 100,150, 241, 430, 700, 801, 805, 811, 813, 834, 835, or 836 (i.e., contains incompatible items),

THEN segregate incompatible materials as follows:

4.6.1.1 Ensure that any incompatible liquids in the box line troughs have been removed.

4.6.1.2 Ensure all incompatible waste material has been removed from the box line areas.

4.6.1.3 Visually inspect all surfaces of the respective box line area.

4.6.1.4 **IF** significant visible contamination is found,

THEN clean the area such that no appreciable volume of material is present to react with the incoming waste.

4.6.1.5 When removal of incompatible waste streams has been completed, record this in the Box Line Narrative Log.

4.6.1.6 Notify the STL.

4.7 Shutdown

4.7.1 Ensure ICS is in manual.

4.7.2 Select LOGOUT and click on the X in the upper right corner.

4.7.3 Select START and choose the log off option then click OK.

4.8 Abnormal and Infrequent Operations

WARNING

Moving the MAIN/RESERVE selector switch from the "MAIN" position to the "RESERVE" position while the Cheetah control panel is in the "DISCHARGE" state will cause the immediate release of the reserve carbon dioxide supply. Reset the Cheetah control panel and verify that it is in the "NORMAL" state prior to moving the selector switch to the "RESERVE" position to avoid inadvertent discharge of agent.

4.8.1 Operational Fire in the Box Line

4.8.1.1 Suspend all activity in the affected box line cell.

4.8.1.2 Position the Brokk so that the discharge nozzle is near the fire and aimed in the direction of the fire.

NOTE: *Liquid CO_2 discharge will last no less than 60 seconds.*

4.8.1.3 Operate the manual-release switch and expel the entire contents of the CO_2 main container continuously on the affected area.

4.8.1.4 Notify the STL or SM.

4.8.1.5 Observe the affected area for the next 30 minutes.

NOTE: *The shift manager or designee will notify ES&H to ensure any environmental verifications are addressed.*

4.8.1.6 **IF** combustion is observed during this period,

THEN immediately perform the following actions:

- Initiate a building evacuation.
- Notify the INEEL Fire Department by calling 777.

OR

IF no combustion is observed during this period,

THEN perform the following actions:

- STL - notify the INEEL Fire Department within 30 minutes.
- Prior to placing the Brokk unit back into service and returning to normal operations, authorization from the shift manager is needed following the debrief.
- Replace the CO_2 fire extinguisher for the affected Brokk unit.

4.8.2 Liquid Absorption Process

NOTE 1: *Based upon the testing of the performance of absorbents, it has been determined that Aquaset may be used for the absorption of aqueous liquids.*

(HWMA/RCRA Treatment Permit)

NOTE 2: *The following steps are the general steps that are used during the absorption process.*

4.8.2.1 Estimate the volume of waste to be treated.

4.8.2.2 Estimate the amount of appropriate absorbent [selected based upon visual examination, process knowledge, acceptable knowledge, or other appropriate means (e.g., water miscibility)].

4.8.2.3 Add the absorbent to the container, sump, or trough.

4.8.2.4 **IF** required,

THEN mix the absorbent and waste using remote tools until absorption appears complete.

4.8.2.5 Visually inspect the treated waste for signs of free liquids.

4.8.2.5.1 **IF** no free liquids are present,

THEN the treatment is considered successful.

NOTE: *The steps outlined for absorption are to be repeated no more than three consecutive times. If a treatment is unsuccessful after three attempts, the adequacy of the procedure is analyzed and continued treatment is handled on a case-by-case basis in consultation with ES&H and the State of Idaho Department of Environmental Quality.*

(HWMA/RCRA Treatment Permit)

4.8.2.6 **IF** the absorption is not effective,

THEN attempt to determine the cause.

4.8.2.6.1 **IF** insufficient absorbent was used,

THEN the process may be repeated with additional absorbent.

(HWMA/RCRA Treatment Permit)

5.0 RECORDS

Records generated by this procedure shall be classified in accordance with the table below, and dispositioned in accordance with MP-DOCS-18.2, AMWTP Records Management.

Record Description	Classification
INST-FOI-16, Case File	Lifetime/QA

6.0 EXHIBITS

None

7.0 APPENDICES

Appendix A – Requirements Implemented by FOI-16

Appendix B – OCI Crane Pre-Checks

Appendix C –Brokk Error Codes

Appendix D – Box Lines Drawings

Figure D-1, System 330, North Box Line

Figure D-2, System 340, South Box Line.

Appendix A – Requirements Implemented by INST-FOI-16

A.1 From a criticality standpoint, there are no restrictions on the use of cleaning agents. Any contaminated material generated SHALL be treated as secondary waste.

(AMWTF CWR)

A.2 All fissile mass controlled areas/containers SHALL have their fissile inventories controlled via at least two independent systems.

(AMWTF CWR)

A.3 Prior to being shredded, empty boxes SHALL be inspected for significant accumulation of material. Any significant accumulations SHALL be removed prior to shredding.

(AMWTF CWR)

A.4 Inspection and clean-out to reset the North and South box line area mass limits SHALL be carried out, as necessary, to ensure that the 370 FGE Pu-239 area mass limits are not exceeded. Such inspections and clean out SHALL remove significant accumulations of material and includes emptying of items such as vacuum cleaners etc.

(AMWTF CWR)

A.5 After inspection and clean-out of either of the North or South box lines, the area mass limit SHALL NOT be set to below 25 FGE Pu-239.

(AMWTF CWR)

A.6 The design capacity for mechanical processing (two pretreatment lines and drum repack system) shall not exceed 12,545 gallons per day.

(HWMA/RCRA Treatment Permit)

A.7 Prior to absorption, the compatibility of the liquid with the absorbent being used is addressed and documented, as required. Compatibility evaluations are typically performed utilizing original waste stream process knowledge and/or RTR examination. Absorbent materials are also checked for compatibility with the original waste streams, and stored accordingly in the MWMUs.

(HWMA/RCRA Treatment Permit)

A.8 In the course of processing boxes of waste, small quantities of SCW may be encountered. SCW items are placed into barcode labeled transfer containers and removed from the box lines, typically, in baskets within the transfer containers. Small quantities of SCW can also exit the box line via the bagging transfer port for manual transfer to the SCW glovebox system.

(HWMA/RCRA Treatment Permit)

A.9 Only known compatible wastes (from existing characterization information) or wastes from the same IDC/WG are placed together into a transfer container for delivery to the SCW glovebox system.

(HWMA/RCRA Treatment Permit)

A.10 Once the SCW information is entered into the Operating Record, the SCW is transferred to the appropriate SCW glovebox.

(HWMA/RCRA Treatment Permit)

A.11 Baskets of SCW are either placed directly into a docked transfer container, or are located in the sort trough and later placed into a transfer container at an available export station port. The baskets can also be left in the transfer container, and the SCW placed into the basket while it is in the transfer container.

(HWMA/RCRA Treatment Permit)

A.12 AMWTP personnel are required to record in logbooks unusual events that occur during their shift in accordance with operational procedures or instructions.

There are two scenarios involving container-in-container for non-debris waste, which may require sampling.

- The first scenario is a drum of containers, which contain waste from the same process. When a drum that has multiple containers of the same non-debris waste is received, one container of the waste is randomly selected for sampling. The sample is collected and analyzed for total metals, VOCs, and SVOCs.
- The second scenario is a container of non-debris waste that is not representative of waste that is contained in other containers that are retrieved from primary containers. Initially, all unknown individual containers of non-debris waste are sampled in the SCW glovebox system. The samples are subjected to total metal and organic (VOC and SVOC) analyses, as applicable. The analytical results from unknown non-debris waste are statistically re-evaluated to determine if the 100% initial sampling frequency can be decreased (see the AMWTP Waste Characterization QAPjP). Unknown non-debris waste that is not sampled, when the 100% sampling frequency is decreased, is assigned an SI, SO, SW, or soil WG based upon RTR, headspace gas analysis, and/or visual examination.

  Unknown liquids from containers or generated from MWMU processes are tested for metals, organics, ignitability, and corrosivity prior to further management.

  This waste is then assigned the appropriate composited WG HWNs.

(HWMA/RCRA Treatment Permit)

A.13 In the course of processing boxes of waste; waste items may be encountered that are operationally desirable to separate from the waste being placed into the drums located under the box lines. These dissimilar items may be set aside in the troughs or in containers until AMWTP personnel determine that the item(s) may re-enter processing. These items will be removed from the box line, at a minimum of every 30 days, typically, when a criticality clean out occurs.

(HWMA/RCRA Treatment Permit)

A.14 Any prohibited items that are unknowingly received in WMF-676 are segregated, packaged for removal, and returned to the generator, DOE, or other MWMU as appropriate.

(HWMA/RCRA Treatment Permit)

A.15 When visual observation through windows and/or the CCTV system shows that all wastes that can be reasonably removed have been removed, the box is classified as an "empty container" in accordance with HWMA/RCRA (IDAPA 58.01.05.005, 40 CFR 261.7) and is transferred to the box size-reduction area for export from WMF-676. Boxes, which do not meet the RCRA empty container requirements, will be managed as MW.

(HWMA/RCRA Treatment Permit)

A.16 Aqueous and organic liquids collected from waste containers with known HWNs are assigned the listed HWNs associated with the original waste.

(HWMA/RCRA Treatment Permit)

A.17 For debris waste that is too heterogeneous to collect a representative sample, HWNs are assigned to the waste based on best technical judgment.

(HWMA/RCRA Treatment Permit)

A.18 The composited WG HWNs are shown in BNFL-RPT-TRUW-12. All determinations involved in assigning IDCs, WGs, and/or HWNs are documented in the Operating Record. Analytical results are also entered into the Operating Record and the waste characterization information updated.

(HWMA/RCRA Treatment Permit)

A.19 Potential methods for waste characterization are included in Table C-5 of the AMWTP HWMA/RCRA Treatment Permit, Attachment 2. The specific, minimum analytical parameters for WMF-676 waste feed and residuals/secondary wastes are provided in Tables C-6 and C-7 of the AMWTP HWMA/RCRA Treatment Permit, Attachment 2.

(HWMA/RCRA Treatment Permit)

A.20 Liquids collected from wastes are removed and treated as appropriate (e.g., neutralization or absorption for subsequent treatment or disposal). Residual liquids are cleaned up before receiving wastes from an incompatible waste IDC/WG or unknown.

(HWMA/RCRA Treatment Permit)

A.21 Restrict sizing operations to metal shears, nibblers, and other mechanical equipment that minimize the generation of sparks unless evaluation of the waste present indicates that sparks are unlikely to be a safety concern.

(HWMA/RCRA Treatment Permit)

A.22 When processing ignitable or incompatible wastes, sorting areas are visually inspected and residual waste is cleaned up and removed between incompatible sequences.

(HWMA/RCRA Treatment Permit)

A.23 Unknown wastes are sequenced through the box lines as if they are incompatible wastes. AMWTP personnel are required to visually inspect and clean up residues before and after unknowns or incompatibles are handled.

(HWMA/RCRA Treatment Permit)

A.24 Liquids collected from the box lines are kept in compatible containers, separated/segregated from other wastes, as required, while in the box lines, absorbed in the box line or in the SCW glovebox system, and only mixed with other wastes in a container after compatibility evaluations have been completed.

(HWMA/RCRA Treatment Permit)

A.25 Criticality clean-outs of the box lines and containment systems provide regular assessment of waste handling and processing conditions (e.g., leaking containers), thereby providing early identification of potentially hazardous situations (e.g., co-mingling of incompatible wastes).

(HWMA/RCRA Treatment Permit)

A.26 The FTS does not record any waste leaving the zone (area). When the preset value is reached, operational procedures are used to clear the area of material before the "running total" is reset by a team leader to a default value.

(AMWTP DSA)

A.27 A valid assay (with 95% confidence) must be performed for all material prior to introduction into an area where a cumulative mass limit has been imposed (i.e., packet assay [at SCW], drum assay, or box assay).

(AMWTP DSA)

A.28 Any waste found in the box that is not suitable for supercompaction, such as containerized liquids and pressurized gas cylinders, is considered SCW and is sent to the SCW glove box system for treatment.

(AMWTP FHA)

A.29 Any potentially flammable or unknown liquids, found in boxes or drums, will be taken out and sent to the SCW glovebox system where they will be handled and treated in accordance with NFPA 30, Flammable and Combustible Liquids Code.

(AMWTP FHA)

A.30 In the event of a fire in the box line, if no signs of combustion are observed within 30 minutes, the affected CO_2 cylinder shall be replaced, and upon Shift Manager approval, the associated Brokk manipulator can be put back in service and operations activities within the affected cell resumed. Within 30 minutes of the event, the Shift Manager/designee shall notify INEEL Fire Department of the event and ensure any required environmental related notifications are addressed. The Shift Manager/designee shall debrief the operator and include details of the incident in the shift logbook.

(AMWTF FHA)

A.31 Operations' training will state that as soon as the operator notices a fire or smolder, the entire contents of the cylinder (extinguisher) must be expelled continuously on the affected area. Operations activities in the cell are ceased, the Shift Supervisor is immediately notified of the incident, and the affected area is watched for 30 minutes. If combustion is noted during this 30 minute period, the operator shall immediately instigate building evacuation and INEEL Fire Department notification.

(AMWTF FHA)

Appendix B – OCI Crane Pre-Checks

NOTE: *Operators or other designated personnel shall notify the STL on any deficiencies found and determine whether the deficiencies constitute a hazard and where a more detailed inspection is needed.*

- Operators or other designated mechanisms for proper operations
- Hoist upper-limit switch/device for proper operations
- Hooks for cracks, deformation, and damage from chemicals
- Hoist rope for significant wear, kinking, crushing, birdcaging corrosion (for cranes, the inspection shall be made by running out as much of the rope as is necessary to visually examine those portions that flex over sheave, sprockets, and the like, and other areas subject to wear or abrasion)
- Hoist chain for nicks, gouges, distortion, wear, cracks, and corrosion
- Hook latch, if used, for proper operation
- Synthetic web straps, if used, for abrasive wear, knots, cuts, or tears, broken stitching, acid or caustic burns, melting or charring, or weld splatter

Appendix C – Brokk Error Codes

CODE	DESCRIPTION
E01	Control lever for CY2 (1Y1/2Y1) not in neutral on start or signal outside permitted voltage range during operation. When the control lever is not in neutral when starting the control box, the function is blocked. Other functions are operational. If the signal for a certain function is outside the permitted voltage range, the entire machine stops.
E02	Control lever for CY3 (1Y2/2Y2) not in neutral on start or outside permitted voltage range during operation. When the control lever is not in neutral when starting the control box, the function is blocked. Other functions are operational. If the signal for a certain function is outside the permitted voltage range, the entire machine stops.
E03	Control lever for CY4 (1Y3/2Y3) not in neutral on start or outside permitted voltage range during operation. When the control lever is not in neutral when starting the control box, the function is blocked. Other functions are operational. If the signal for a certain function is outside the permitted voltage range, the entire machine stops.
E04	Control lever for hydraulic attachment (1Y4/2Y4) not in neutral on start or outside permitted voltage range during operation. When the control lever is not in neutral when starting the control box, the function is blocked. Other functions are operational. If the signal for a certain function is outside the permitted voltage range, the entire machine stops.

CODE	DESCRIPTION
E05	Control lever for slew function (1Y5/2Y5) not in neutral on start or outside permitted voltage range during operation. When the control lever is not in neutral when starting the control box, the function is blocked. Other functions are operational. If the signal for a certain function is outside the permitted voltage range, the entire machine stops.
E08	Supply voltage ripple too great. The machine does not stop and operation of functions can be controlled. Faulty capacitor.
E09	24VDC power supply voltage to electronic unit too low. Power supply voltage below 24VDC. Machine does not need to stop but functions can be operated.
E10	24VDC power supply voltage to electronic unit too high. Power supply voltage above 29VDC. When the voltage is above 33VDC, the machine stops, the display goes out and only the POWER LED is on.
E11	Overload on power supply to control box.
E12	Short circuit in an On/Off-function. The machine stops. The output that is short circuited is located by activating one On/Off function at a time.
E13	Break in cable on output to On/Off-function. Machine does not stop. Break in cable or load on On/Off output. Function does not operate.
E14	Shorting of the holding current to contactor K1 for direct start and soft start. K1, K2 and K3 at Y/D start. The machine stops. On machines with intermediate relay K7 for holding current, K7 is malfunctioning or short circuit in cable to the relay.

CODE	DESCRIPTION
E15	Interruption of holding current to the contactor or contactors. On machines with intermediate relay K7 for holding current, K7 is malfunctioning or short circuit in cable to the relay.
E16	Proportional function short circuited. The machine stops. The output that is short circuited is located by activating one output at a time.
E17	There is a break in the proportional function cable or magnet in the pilot valve. Machine does not stop but function does not operate.
E30	Incorrect phase sequence on machines equipped with phase sequence relay.
E31	Triggered overload relay.
E33	Undervoltage together with triggered overload relay. If undervoltage is present, the motor will consume more current, which triggers the overload relay. Undervoltage need only affect one phase to cause the overload relay to trigger after operating for a while.
E35	Output for holding voltage to the contactors on at start.
E36	Output for proportional function on at start.
E40	Transfer of parameters from the control box blocked by the electronic unit. Transfer from the control box when in programming mode is blocked by a time limit.
E47	Break in temperature sensor cable or sensor itself.
P	Displayed when the ID code or basic program is transferred from the control box to the electronic unit.
-bL	Control box off for more than 120 seconds. For safety reasons, restarting is blocked if the control box has been turned off for more than 120 seconds. Voltage to the electronic unit must be disconnected before being able to restart. Applies to radio control only.
•	Dot in the first character space or anything else flashing. General fault.

Appendix D – Box Lines Drawings

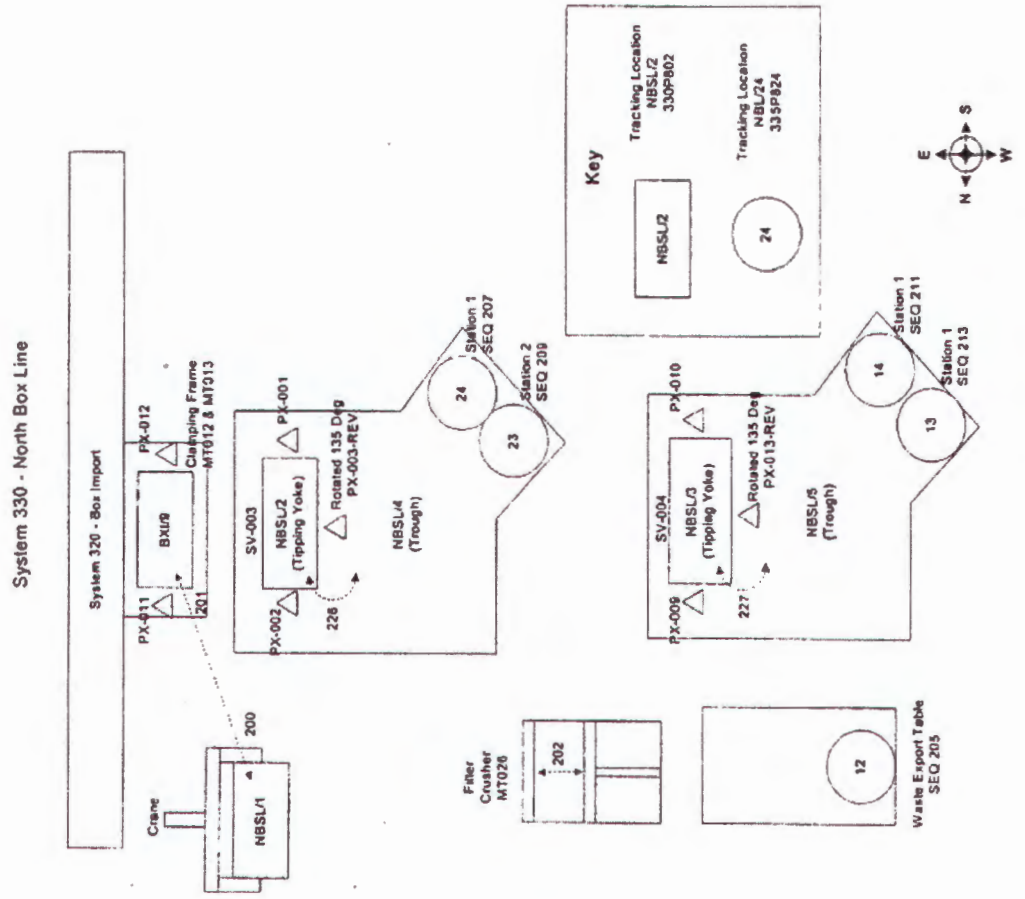

Figure D-1, System 330, North Box Line

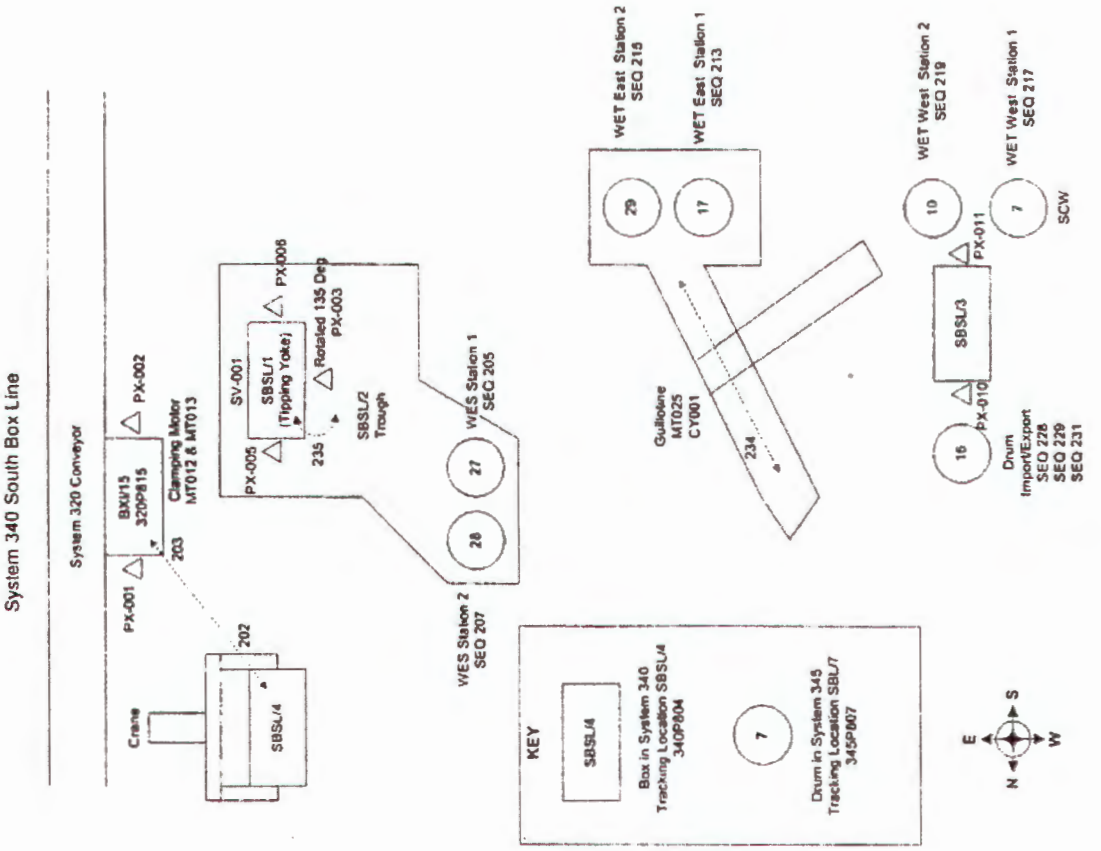

Figure D-2, System 340, South Box Line

DIVIDER PAGE

AMWTP Advanced Mixed Waste Treatment Project

AK Source Document Review Summary

B-2013-0045 RECORD JMC 02/25/13

Form-1068, Rev. 4
Effective: 01/08/09
Page 1 of 1

Implementing Document: MP-TRUW-8.13

1. Source Document Tracking Number: P1826A	**2. Revision:** 0

3. Category

- [x] Published Documentation
- [ ] Unpublished Documentation
- [ ] Correspondence
- [ ] Discrepancy

4. Title/Description Information: Acceptable Knowledge Document for Pre-1980 INL-Exhumed SDA Waste, RPT-TRUW-91

Document Number: RPT-TRUW-91
Revision: 0
Author: AMWTP
Date: 02/14/2013

5. AK Element	6. Generator Or Waste Type(s)	7. Location in Source Doc.	8. AK Information Summary:
WM1, WM2, WM3, WM4, WM5, WM6, WM7, WM8	BN, IW	All	Acceptable Knowledge Document for Pre-1980 INL-Exhumed SDA Waste
WS1, WS2, WS3, WS4, WS5, WS6, WS7, WS8	SD-176, SD-177, SD-178, SD-179	All	Acceptable Knowledge Document for Pre-1980 INL-Exhumed SDA Waste

9. Document Summary:

The document is the AK baseline document for pre-1980 INL-exhumed SDA waste. The document contains information on waste generation, waste inputs, HWNs, constituents, PCB status, packaging, defense determination and includes other basic AK information

See the most up-to-date version on EDMS.

10. Source Document Data Limitations (if any):

None identified at this time.

11. AK Expert:	Tim Venneman		2/27/2013
	Print	Sign	Date

Acceptable Knowledge Document for Pre-1980 INL-Exhumed SDA Waste

Advanced Mixed Waste Treatment Project

Approval:

(Signature on file. See DCR-10739.)

02/14/13
Date

Advanced Mixed Waste Treatment Project

Acceptable Knowledge Document for Pre-1980 INL-Exhumed SDA Waste

REVISION LOG

Revision Number	Date Approved	Pages Affected	Description of Revision
0	02/14/13	All	DCR-10739. Initial document.

CONTENTS

ACRONYMS vi

EXECUTIVE SUMMARY viii

1.0 INTRODUCTION 1

1.1 Background 2

1.2 INL SDA Pre-1980 Exhumations 16

2.0 REQUIREMENTS 18

3.0 WASTE MANAGEMENT LEVEL INFORMATION 18

3.1 Facility map and mission description 18

3.2 Defense Determination and WIPP Land Withdrawal Act Assessment 20

3.3 Description of Operations that Generated the Waste 22

3.4 TRU Waste Management 24

3.5 Waste Certification Procedures 24

3.6 TRU Waste Inventory 25

3.7 Correlation of Waste Stream Generated 25

4.0 GENERAL PRELIMINARY WASTE GROUP INFORMATION 26

4.1 Waste Description 26

4.2 Waste Generation 27

4.3 Waste Packaging 34

4.4 Waste Characterization 35

4.5 Prohibited Items/Waste 39

5.0 HOMOGENEOUS SOLIDS PRELIMINARY WASTE GROUP INFORMATION 40

5.1 Waste Description 40

5.2 Waste Generation 40

5.3 Waste Volume 40

5.4 Waste Packaging 40
5.5 Waste Characterization 41
6.0 HETEROGENEOUS DEBRIS PRELIMINARY WASTE GROUP INFORMATION 46
6.1 Waste Description 46
6.2 Waste Generation 46
6.3 Waste Volume 46
6.4 Waste Packaging 46
6.5 Waste Characterization 46
7.0 SOIL PRELIMINARY WASTE GROUP INFORMATION 52
7.1 Waste Description 52
7.2 Waste Generation 52
7.3 Waste Volume 52
7.4 Waste Packaging 52
7.5 Waste Characterization 52
8.0 REFERENCES 58
Appendix A – Material/Chemical Inputs for Preliminary Waste Groups A1

FIGURES

Figure 1. Map of the Idaho National Laboratory showing locations of the Radioactive Waste Management Complex and other major facilities. 1

Figure 2. Map of the RWMC showing the location of pits, trenches, and soil vaults in the SDA. 20

Figure 3. General process flow chart for INL-exhumed SDA wastes. 32

TABLES

Table 1. IDC, IDC Description and Estimated Number of Waste Containers. 25

Table 2. Preliminary Waste Group description, IDC, and IDC Description for Pre-1980 INL-exhumed SDA wastes. 26

Table 3. HWNs and associated hazardous constituents (or generating process for source-specific F-listings) associated with the Pre-1980 INL-Exhumed SDA Preliminary Waste Groups (i.e., Homogeneous Solids, Heterogeneous Debris and Soil). 37

Table 4. Relative activity of radionuclides expected in the Preliminary Waste Groups. 39

ACRONYMS

AEC	Atomic Energy Commission
AK	acceptable knowledge
AMWTP	Advanced Mixed Waste Treatment Project
ANL	Argonne National Laboratory
ANP	Aircraft Nuclear Propulsion
ARA	Auxiliary Reactor Area
ARAR	applicable or relevant and appropriate requirements
ARP	Accelerated Retrieval Project
ATWIR	Annual Transuranic Waste Inventory Report
CERCLA	Comprehensive Environmental Response, Compensation, and Liability Act
CFA	Central Facilities Area
CH	contact-handled
COCA	Consent Order and Compliance Agreement
CPC	Coors Porcelain Company
D&D	Decontamination and Decommissioning
DOE-ID	US Department of Energy Idaho Field Office
DOT	Department of Transportation
EBR-II	Experimental Breeder Reactor-II
ECF	Expended Core Facility
EDF	engineering and design file
EPA	Environmental Protection Agency
ER	environmental remediation/restoration
EWR	Early Waste Retrieval
FFA/CO	Federal Facility Agreement/Consent Order
HEPA	high efficiency particulate air
HF	hydrofluoric acid
HWN	hazardous waste number
ICP	Idaho Cleanup Project
ICPP	Idaho Chemical Processing Plant (now called INTEC)
IDC	item description code
IDR	Initial Drum Retrieval
IET	Initial Engine Test
INL	Idaho National Laboratory (including various other modifications)
LLW	low-level waste
LRL	Lawrence Radiation Lab
ML-1	Mobile Low-Power Reactor Number 1
MTR	Materials Test Reactor

NOS	not otherwise specified
NPL	National Priorities List
NRC	Nuclear Regulatory Commission
NRF	Naval Reactor Facilities
NRTS	National Reactor Testing Station
NWPA	Nuclear Waste Policy Act
OU	operable unit
PBF	Power Burst Facility
PCB	polychlorinated biphenyls
PPE	personal protective equipment
R&D	research and development
RCRA	Resource Conservation and Recovery Act
RFP	Rocky Flats Plant
RTR	real-time radiography
RWMC	Radioactive Waste Management Area
SDA	Subsurface Disposal Area
SL-1	Stationary Low-Power Reactor No. 1
SOM	Colorado School of Mines
SPERT	Special Power Excursion Reactor Test
SRWRT	Solid Radioactive Waste Retrieval Test
TAN	Test Area North
TRA	Test Reactor Area
TRU	transuranic
TRUPAC	Transuranic Waste Authorized Methods for Payload Control
TSA	Transuranic Storage Area
TSA-RE	Transuranic Storage Area-Retrieval Enclosure
TSDF	treatment, storage, and disposal facility
U.S.	United States
USGS	U.S. Geological Survey
VE	visual examination
WAG	waste area group
WIPP	Waste Isolation Pilot Plant
WSPF	Waste Stream Profile Form

EXECUTIVE SUMMARY

The purpose of this document and supporting documentation is to present the Advanced Mixed Waste Treatment Project (AMWTP) available acceptable knowledge (AK) for waste exhumed from the Idaho National Laboratory (INL) Subsurface Disposal Area (SDA) before 1980.

In accordance with the State of New Mexico RCRA permit for the Waste Isolation Pilot Plant (WIPP) facility (Attachment C, Waste Analysis Plan), before shipping waste to WIPP, AK must be obtained for each waste stream, and the information must be placed into an auditable record.[50]

AK is obtained and placed into the AMWTP AK auditable records in accordance with MP-TRUW-8.13, Collection, Review, and Management of Acceptable Knowledge Documentation. This procedure outlines the methods used by AMWTP personnel and/or subcontractors in the collection, review, compilation, evaluation, and management of AK documents. The procedure outlines the required information to be placed into AMWTP AK documents.[11]

The AMWTP Transuranic Storage Area Retrieval Enclosure (TSA-RE) contains wastes that were generated by the INL during the 1970s as a result of early Radioactive Waste Management Complex (RWMC) SDA remedial investigations.

From 1969 through 1978, the INL conducted four waste retrieval investigations within the SDA. The retrieval investigations were conducted to retrieve specific waste containers from the SDA and to gather experience for subsequent clean-up operations. The information and experience gained from these early retrievals provided insight on SDA buried waste and valuable container management approaches to support safe retrieval and management of old waste previously disposed within the SDA. The INL SDA exhumations were conducted with the goal of retrieving, examining, and repackaging waste from various INL SDA pits and trenches in order to obtain initial information on safe retrieval of previously buried waste and to support future exhumations. The information and experience gained was used to conduct subsequent retrieval investigations/remedial actions under the INL Federal Facilities Agreement/Consent Order (FFA/CO).

Of the four early SDA environmental remediation/restoration (ER) retrieval investigations, only two retrieval investigations resulted in waste being exhumed and transferred to the TSA-RE.[14, 15, 17, 18, 19, 20] Waste generated from the two SDA exhumations are collectively referred to as Pre-1980 INL-Exhumed SDA Waste within this document. This document summarizes the available AK for Pre-1980 INL-Exhumed SDA waste.[a, b] The two SDA

a. This area is currently identified as the AMWTP TSA-RE.

b. INL environmental remediation/restoration operations (collectively referred to as "ER").

exhumations that contributed waste to the TSA-RE were associated with the INL Initial Drum Retrieval (IDR) Project, and the INL Early Waste Retrieval (EWR) Project.[14, 15, 17, 18, 19, 20]

The INL (including the SDA) is subject to both Resource Conservation and Recovery Act (RCRA) and Comprehensive Environmental Response, Compensation, and Liability Act (CERCLA) requirements. The INL is identified as an Environmental Protection Agency (EPA) National Priorities List (NPL) site and is classified as a RCRA treatment, storage, and disposal facility (TSDF). As such, the INL is subject to clean-up/remediation under both the RCRA corrective action program and CERCLA.[21, 61]

Before the INL was identified on the NPL, the INL was subject to the 1987 Consent Order and Compliance Agreement (COCA). In order to satisfy various aspects of regulatory requirements and agreements associated with clean-up/remediation of historically contaminated areas, the INL entered into an FFA/CO.[25] Compliance with the FFA/CO satisfies clean-up requirements under CERCLA and RCRA and superseded prior agreements/consent orders. The consolidated clean-up programs being conducted under the FFA/CO is referred to as FFA/CO-CERCLA for purposes of this document.[1, 2, 10, 25, 56, 61],

During the IDR and EWR projects, various types of waste and waste containers were retrieved. The IDR and EWR projects exhumed both 55-gallon and 30-gallon containers. Secondary wastes (e.g., personal protective equipment [PPE], tools, etc.) identified as transuranic (TRU) were containerized into 55-gallon drums or Tri-Wall containers (cardboard) and overpacked. The exhumed wastes were overpacked into cargo containers, fiberglass boxes, M-III bins (DOT 7A steel bins), and 83/85-gallon drums. The cargo containers, M-III bins, and other waste containers were shipped to the TSA-RE and placed into retrievable storage.[14, 15, 17, 18, 19, 20]

1.0 INTRODUCTION

The Idaho National Laboratory (INL) Radioactive Waste Management Complex (RWMC) subsurface disposal area (SDA) in southeastern Idaho is a historical landfill used primarily for disposal of DOE radioactive waste (See Figure 1).

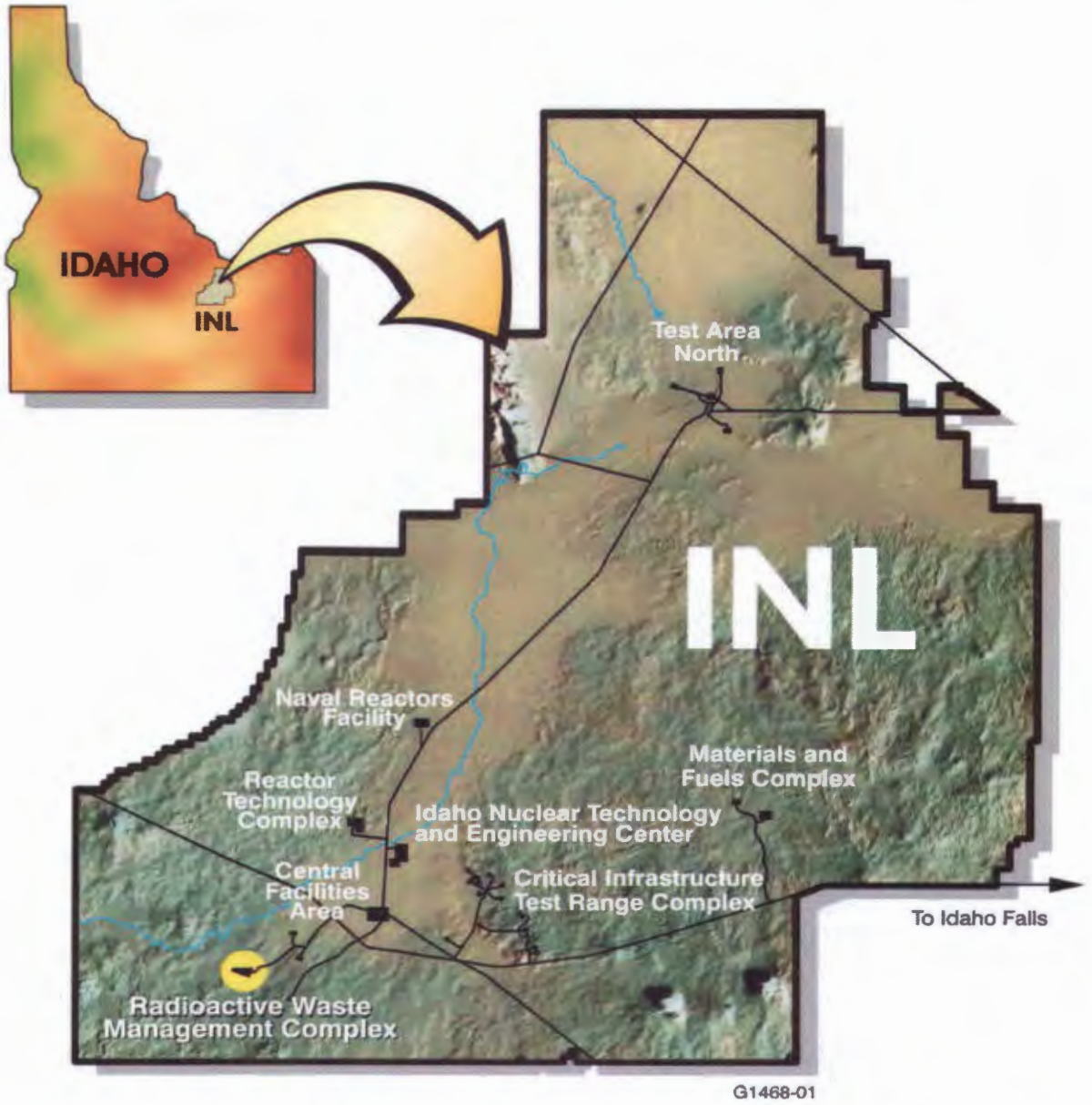

Figure 1. Map of the Idaho National Laboratory showing locations of the Radioactive Waste Management Complex and other major facilities.

1.1 Background

The INL (previously referred to as the National Reactor Testing Station [NRTS]) SDA landfill was established in 1952 and covers an area of approximately 97 acres. From 1952 to 1970, radioactive waste, including TRU waste, was buried in INL SDA pits, trenches, and soil vault rows. During the period of operation, the Rocky Flats Plant (RFP), the INL and various off-site waste generators disposed of waste into the INL SDA. Containers of waste from RFP were buried in the SDA from 1954 to 1970.

The NRTS was designated in May 1960 as one of two Interim National Burial Grounds for disposal of waste from any source. The SDA also was used as a landfill for waste generated by licensees of the Atomic Energy Commission (AEC). Waste from a number of non-INL generators (universities and private waste handlers) was buried at the SDA during its operational history. Although not strictly adhered to, the pits were used primarily used for disposal of RFP waste (but also includes INL and off-site wastes) and the trenches were primarily used for INL wastes (but also includes RFP and off-site wastes). The RFP waste was collocated with waste generated at the INL and other non-INL generators for several years.[4, 44, 72]

The primary contributor of TRU waste to the INL SDA was the RFP.[4, 18, 41, 46, 47, 48, 72]

In June 1957, the Rocky Flats AEC Office granted permission to Dow to accept wastes generated by local off-site institutions and government agencies (e.g., universities, private industry, and defense agencies). Over the period from 1957 through 1970, off-site wastes were received at the RFP and transshipped to the INL. These generators contributed a minor portion of waste to the SDA. These off-site transshipped generators are summarized below and are listed in the expected order of waste contribution based on current retrieval information. [41]

1.1.1 RFP Off-site Transshipped Generators

Coors Porcelain Company (CPC) of Golden Colorado

Agreements were reached with the AEC to allow CPC to dispose of the Project Pluto liquid wastes at the RFP, and to use the RFP as an intermediate stopping point for solid wastes destined for federally approved radioactive waste burial grounds. Solid wastes with low-level uranium contamination from CPC were received at the RFP for shipment to the INL. Records indicate that thirty 55-gal drums of low-level uranium contaminated waste, and some EU-contaminated government-furnished "excessed" equipment associated with Project Pluto, were shipped to the INL for ultimate disposal from 1964 to 1970. Twenty-six of the drums contained beryllium oxide extruder or fired scrap, and the other four drums contained EU-contaminated combustible and noncombustible wastes thought to have been buried in Pit 11. [4, 44, 72]

Colorado School of Mines (SOM)

Two 55-gal waste drums were shipped from the SOM to the RFP and transshipped to the INL. These drums were received and buried in November 1962. It is assumed that this shipment was radioactively contaminated waste generated from the research conducted for the AEC and contained the ^{137}Cs and ^{60}Co sources and general laboratory wastes. Nine drums of plutonium contaminated waste were shipped to the INL between April 1964 and March 1965, eight were identified as containing Type I wastes (i.e., combustible wastes) and one containing Type V wastes (i.e., noncombustible waste). These are assumed to have been generated during the research project for the Defense Atomic Support Agency. [4, 44, 72]

Denver Research Institute

The waste received consisted of 30 debris waste containers of Type I and V debris, filters and beryllium contaminated debris that were used in chemistry classes. [4, 44, 72]

United States Geological Survey (USGS)

The USGS operated a small nuclear reactor beginning in 1969 at the Denver Federal Center that may have generated 43 radioactive debris waste containers that were transshipped to the INL by the RFP during the 1964 through 1970 time frame. [4, 44, 72]

Dow Designation (U.S. Food and Drug Administration, U.S. Department of Interior, GE Sandia, Bureau of Land Management, U.S. Fish and Wildlife Commission, Rocky Mountain Arsenal, and VA Hospital).

The Dow designation includes wastes generated from the RFP onsite activities and wastes from off-site generators. During the period of RFP operation by the Dow Chemical Company, periodic trans-shipments occurred from the RFP to the INL that identified Dow Construction as the shipping facility. Dow was periodically identified on the INL load list as the shipper for both off-site and onsite RFP waste. Information on waste from these off-site generators is limited. Wastes from these generators include:

- The U.S. Food and Drug Administration listed radioactively contaminated filters and crucibles, a lead sheet, paper, and other miscellaneous debris waste.
- The Bureau of Land Management listed one 30-gallon drum of beryllium-contaminated waste.
- GE Sandia sent a total of forty-one 15-gal drums of tritiated unclassified scrap (tritiated oil, rags, mercury, rubber hosing, and protective clothing) and soil samples.
- Other waste is considered to be Type I and V debris and soils. [4, 44, 72]

Additional RFP Transshipped Wastes

The first off-site wastes received at the RFP after permission was granted by the AEC in 1957 came from Lowry Air Force Base (LAFB), Martin Aircraft, United States Bureau of Reclamation (BOR), and USGS. Other off-site generators identified in AK source documents that were specifically identified include the Oil Shale Company (TOSCO), University of Colorado Medical School, Sunstrand Manufacturing (SUN), and Lawrence Radiation Lab (LRL). In 1970, twenty-five 55-gal drums of oil shale residue were received and buried in Pit 11. This waste was identified as Type VI sludge. This waste was generated by TOSCO. With the exception of the Type VI sludge from TOSCO, all other off-site wastes were Type I combustible debris, Type V noncombustible debris, a combination of Type I and Type V debris, and beryllium-contaminated debris. [4, 44, 72]

1.1.2 INL On-site Generators

The following five areas contributed most of the INL waste to the SDA.

Idaho Chemical Processing Plant (ICPP)

The ICPP (now the Idaho Nuclear Technology and Engineering Center, INTEC) is located near the center of the INL between Central Facilities Area (CFA) and Test Reactor Area (TRA) (see Figure 1). The primary purpose of this facility was to recover ^{235}U from expended military and test reactor fuel. Several processes at ICPP, however, produced waste that was sent to the SDA for burial.

These processes included:

- Leaching of Vycor glass, which was contaminated with uranium and other radionuclides from the Experimental Breeder Reactor-II (EBR-II) pyrometallurgical process.
- Dissolving small quantities of irradiated Navy fuel pieces in the Multicurie Cell to test uranium dissolution flowsheets. After the experiments were completed, the total solution produced (including the ^{235}U) was reacted with plaster of Paris in polyethylene bottles to produce a solid.
- "Cold testing" uranium recovery or waste calcination flowsheets using zirconium metal scrap.
- Removing end pieces from EBR-II fuel assemblies before processing.
- Removing lead bricks and lead sheets contaminated from use in shielding areas.
- Replacing off-gas filters in the off-gas cleaning system of the Waste Calcining Facility after they became loaded with particulate matter.

- Operations at laboratory and decontamination facilities which generated pipe, glass, gloves, cans, vessels, wire, valves, paper, metal, wood, clothing, filters, plastic bottles, and rubber. [4, 44, 72]

Naval Reactors Facility

The Naval Reactors Facility (NRF) is located in the western part of the INL, northeast of the SDA (see Figure 1). This area was developed to test the propulsion plant design and to train Navy personnel to operate reactors in preparation for duty on nuclear-powered submarines and ships in the fleet. The Expended Core Facility (ECF), built at NRF in 1958, was designed to receive irradiated naval reactor fuel, perform examinations on the fuel elements, remove excess structural material from the fuel elements, and transfer the fuel elements to ICPP. Waste was generated by the naval reactor prototypes as a result of activities such as reactor coolant sampling, fuel examination work maintenance, repair, and refueling. The majority of the waste originating at the prototype plants is compactable waste (e.g., plastic bags, rubber gloves, blotter paper, and other materials used to contain contamination) with very low levels of radioactivity. In addition to this compactable and largely incinerable waste, there have also been occasional metal valves and piping sections that are not compactable and that can contain higher quantities of radioactivity. Metal tanks and drums containing spent ion-exchange resins and sludge from water processing systems add to the noncompactable component of the waste. The majority of waste that has been transferred from NRF to the SDA has come from ECF. Structural material was cut from naval cores before the fuel elements were sent to ICPP for reprocessing. The scrap irradiated structural material, mostly stainless steel, with some inconel and zircaloy was shipped to the SDA in shielded scrap casks and remotely handled. The solidified waste included dissolved Power Water Reactor fuel rods absorbed in vermiculite in poly bottles and solidified waste oil in vermiculite or absorbents. Facility operations created large quantities of rags, plastic, blotter paper, rubber gloves, sections of contaminated ventilation ducts, piping, valves, tools, lead shielding material in bricks and sheets, loose, friable asbestos and thermal insulation removed from piping and glassware was frequently packed with the compactable waste. [4, 44, 72]

Test Area North

Test Area North (TAN) lies at the north end of the INL (see Figure 1). TAN was designed and constructed in the early 1950s to support the General Electric Aircraft Nuclear Propulsion (ANP) Program, the mission of which was to test the concept of the nuclear-powered airplane. The program support facilities consisted of the Technical Support Facility (TSF), where technical support facility personnel had offices; the Initial Engine Test (IET) Facility; the Hot Shop, a large hot cell into which the engines could be moved for repair, assembly, and disassembly; and some smaller hot cells, built for the examination of individual irradiated fuel pieces or other irradiated specimens. After the ANP Program, the TAN Hot Shop and hot cells were used on an ad hoc basis for projects that required heavy shielding. In 1961, near the end of the ANP Program, the Stationary Low-Power Reactor No. 1 (SL-1) accident occurred. The SL-1 reactor vessel was disassembled for examination at the TAN Hot Shop. From July 1962 until the 1970s, the TAN Hot Shop and hot cells were, with four exceptions, devoted principally to the

Loss of Fluid Test reactor and miscellaneous minor examinations and tests for TRA and the Power Burst Facility (PBF). The four exceptions involved examining the two reactor cores included in the Systems for Nuclear Auxiliary Power Transient (SNAPTRAN) tests, the final disassembly and examination of the Mobile Low-Power Reactor Number 1 (ML-1) reactor core and the testing and examination of the Portable Medium Nuclear Power Plant (PM)-2A reactor vessel. Most of the waste produced at TAN was a result of the specific test and evaluation programs. The decontamination, disassembly, evaluation, and discarding of the components of the tests generated a wide variety of waste. The majority of the waste generated at TAN was shipped from the TAN Hot Shop or hot cells. The waste generated included contaminated piping and insulation, stainless steel engine parts, insulation shrouds, contaminated rags, plastic and paper used in decontamination, metallurgical samples, contaminated parts, reactor/auxiliary components and resulting scrap waste. (4, 44, 72)

Test Reactor Area

The Test Reactor Area (TRA; now the Reactor Technology Complex) is located north of CFA and west of ICPP at the INL (see Figure 1). The major facilities at TRA are the Materials Test Reactor (MTR), operating from 1952 to 1970; the Engineering Test Reactor, operating from 1957 to 1981; and the Advanced Test Reactor, operating from 1969 to the present. In addition to the test reactors, the TRA also had hot cells and various laboratories. The TRA hot cells have been an integral part of test reactor support operations since the beginning of operations at the MTR. They were used for disassembly and examination of irradiated samples and experiment assemblies from the test reactors. Much of the experiment waste sent to the SDA was generated at the hot cells. Most of the waste generated at TRA is associated with the operations of the test reactors and the examination of irradiated experiment assemblies in the TRA hot cells. The hot cells are the second largest generator of waste at TRA. Almost all items removed from the hot cells are considered to be radioactive. If there is no further need for these items, they are classified as radioactive waste.

The following are examples of waste sent to the SDA from TRA:

- Core and experiment loop components constructed of aluminum, stainless steel, or zircaloy. The waste consists of core and loop components, loop piping, stainless steel and aluminum pieces, and end-pile tubes or end boxes from fuel elements.
- Waste from clean up of liquid spills or clean-up after a shutdown. This includes contaminated rags and floor sweepings, blotting paper and vermiculite. Some contaminated wood is included.
- Contaminated air filters.
- Contaminated metals including cadmium, uranium powder in metal, irradiated beryllium from the reactor reflector change-outs, and contaminated or activated lead no longer useful for shielding. (4, 44, 72)

Argonne National Laboratory-West

Argonne National Laboratory-West (ANL-W) (now the Materials and Fuels Complex, MFC) is located at the southeast portion of the INL (see Figure 1). ANL-W waste is addressed in the AK document, RPT-TRUW-79, Acceptable Knowledge Document for Materials and Fuels Complex (MFC) Waste. [76]

1.1.3 Additional INL On-Site Generators

The remaining generators are referred to as the "other generators" in the reference documents. They contributed less than 10% of the volume of waste disposed of in the SDA. Other onsite generators (see Figure 1) include the Site-wide Decontamination and Decommissioning projects, Auxiliary Reactor Area, CFA, PBF/Power Excursion Reactor facility, and the RWMC itself as a waste generator. [4, 44, 72]

Site-wide INL Decontamination and Decommissioning Projects

Decontamination and decommissioning (D&D) operations concentrated on the dismantling and decommissioning of buildings and building components. The D&D of INL nuclear facilities has been in progress as a separate function since 1975. D&D programs that contributed waste to the SDA through 1983 include D&D of the Army Re-Entry Vehicle site; the Boiling Water Reactor Experiment (BORAX)-V reactor area; the IET Facility; the Organic Moderated Reactor Experiment Facility; the S1G reactor vessel; the Special Power Excursion Reactor Test (SPERT)-IV reactor building; and underground tanks, a liquid waste evaporator system, and a concrete pad at TAN. Waste generated by D&D programs consists primarily of surface-contaminated metal, lumber, insulation, pipe, wire, wood, plastic, rags, and concrete, as well as soils contaminated with localized deposits of radioactive particles or from leaking in underground piping that carried highly radioactive solutions. [4, 44, 72]

Auxiliary Reactor Area

Auxiliary Reactor Area (ARA) is located in the south-central part of the INL and consists of four main areas: ARA-I, ARA-II, ARA-III, and ARA-IV. These areas were collectively called the Army Reactor Area until 1965, when the Army's programs at the INL were phased out. ARA was originally built to house and support the SL-1 reactor, the Army Gas-Cooled Reactor Experiment (GCRE), and the ML-1 reactor. The ARA generated waste from the SL-1 cleanup: a 1,000-gal tank, a demineralizer with resin, various building materials, pipes, soil, wire, concrete, insulation, etc. Low-level waste listed as "scrap" and "rad waste not otherwise specified (NOS)" were taken from the ML-1 site during cleanup. There was also a small amount of paper and wood. Hot cell waste consisted of fuel residue; metals (copper, cadmium, stainless steel, and aluminum); soil; high efficiency particulate air (HEPA) filters; and cleanup supplies (rags, paper, mops, etc.). Clean-up activities also generated contaminated soil and scrap building material. [4, 44, 72]

Central Facilities Area

The Central Facilities Area (CFA) is located in the south-central portion of the INL. CFA currently operates as a centralized location to support the other INL facilities, including administrative support, service shops, sanitary landfill, warehousing, security support, laboratory services, training, medical services, and receiving and storage. The types of waste generated consists of miscellaneous scrap metal, gas cylinders, lead batteries, insulated wire, glass, soil, aluminum, beryllium, cadmium, and general combustible waste (plastic, paper, and rags). Waste from CFA is from several facilities, past and present, including the CFA laundry, machine shops, maintenance shops, lead shops, laboratory facilities, sewage treatment facilities, and Radiological and Environmental Sciences Laboratory (RESL). Radioactive waste from CFA typically includes contaminated combustibles, scrap metal, and nuclear radiation sources. Nonradiological contaminants from the CFA were not routinely disposed of in the SDA. [4, 44, 72]

Power Burst Facility

The Power Burst Facility (PBF) area is located northeast of the CFA. This area originally contained reactors constructed for the Special Power Excursion Reactor Test (SPERT) experiments. Four SPERT reactors were built beginning in the late 1950s as part of an early investigation involving reactor transient behavior tests and safety studies on water-moderated, enriched-fuel reactor systems. All of the reactors have been removed, and most of the facilities have undergone D&D. The last of these reactors was placed on standby status in 1970. PBF began operations in 1972. PBF presently consists of the PBF reactor area (north of SPERT-I), PBF control area, Waste Engineering Development Facility (at the SPERT-II site), Waste Experimental Reduction Facility (at the SPERT-III site), and Mixed Waste Storage Facility (SPERT-W). The PBF area contributed radioactive waste to the SDA from operations associated with the four SPERT reactors. This waste consisted primarily of metals, combustibles, and core and loop components. Minor volumes of nonradiological waste (solvents, resins, cleaning solutions, and acids) were included with waste shipments to the SDA. [4, 44, 72]

Radioactive Waste Management Complex

The RWMC was established at the INL in 1952 to accommodate the radioactive waste generated by laboratory operations. Minimal amounts of waste were generated directly by the RWMC and disposed of in the SDA. Waste from the RWMC consists primarily of radiologically contaminated materials (general debris and soil) associated with decontamination processes at the RWMC. [4, 44, 72]

1.1.4 Non-INL Generators

Between 1960 and 1963, the SDA also was used as a landfill for waste generated by licensees of the AEC. Waste from a number of non-INL generators (universities and private waste handlers) was buried at the SDA throughout this period. Two additional shipments of non-RFP, non-INL wastes were buried in 1967 and 1969. The four non-INL facilities that generated the largest volumes of waste shipped to the SDA, in order of volume shipped

were: Lawrence Radiation Laboratory (2,241 cubic meters), Rockwell International –Atomics International Division (1,392.3 cubic meters), Nuclear Regulatory Commission – Region V (791.42 cubic meters), and General Atomic Company (714.82 cubic meters). A majority of the waste from the Nuclear Regulatory Commission (NRC) was originally from the other three listed generators. These four generators shipped approximately 90% of the waste from off-site generators during 1960 to 1963 (excluding RFP) and were intermixed with INL and RFP waste in Pits 2, 3, and 4. The other generators predominantly disposed of scrap metals and combustible materials that were radiologically contaminated. Because these generators contributed less than 10% by volume of the overall waste to the SDA, it would be inappropriate to attempt to discuss each process in detail. Available information on the earliest years is somewhat limited since much of the documentation concerning operation at the RWMC before 1970 was destroyed when the required retention period was exceeded. Therefore, the discussions of the waste generation processes from these generators are general. The four primary generator's waste is listed separately. The other generators are group listed with their general waste. [4, 39, 41, 46, 47, 48]

Lawrence Radiation Laboratory (LRL)

University of California, Lawrence Radiation Laboratory, Berkeley, CA. Lawrence Labs waste was from material shipped from Berkeley and Livermore. The three areas from which waste was generated at Berkeley were studies of isotopes on metabolic systems, biological studies and new isotope studies. The Livermore waste was from weapons testing, weapons testing equipment and engine fabrication. Most of the waste consisted of the following items:

- Contaminated paper and clothing
- Glassware, plastic, and laboratory equipment
- Solidified liquid waste
- Activated metals
- Gloveboxes
- Scintillation fluids in vials
- HEPA filters
- Concrete, bricks and asphalt
- Animal carcasses.

Concrete was used to encapsulate and/or solidify the waste. [4, 44, 72]

Rockwell International–Atomics International Division

Waste received from Atomics International Division, Rockwell International, Canoga Park, California, was derived from research and development, design, construction, and testing of several nuclear reactors and associated systems. The following types of waste were included in waste shipments to the SDA:

- Sodium (Na) and sodium-potassium (NaK) metal
- Small amounts of mercury
- Tritium contaminated glassware
- Samples of uranium and zirconium fuel
- Small quantities of triphenyls and diphenyls
- Beryllium
- Scrap metal
- HEPA filters
- Fume hoods and ducting.

The contents of drums and boxes were encased in concrete. Liquid waste was placed in 55-gal drums, solidified, and covered with a concrete cap. [4, 44, 72]

Nuclear Regulatory Commission Region V, AEC -San Francisco Operations

During 1961, radioactive wastes were received from the AEC-San Francisco Operations, which became the NRC-Region V.[c] The waste was shipped in 55-gal drums, wooden boxes and other containers (steel culverts, steel buoys). Approximately 2,712 drums contain dry waste solidified in concrete. The culverts and buoys also contain dry waste and concrete. This waste originated from an AEC cleanup operation of the Coastwise Marine Disposal Company warehouse located in Long Beach, California. Coastwise was a radioactive waste disposal company and serviced a number of commercial and government facilities. Information is unavailable on the processes and waste streams of these facilities. The AEC permanently revoked the Coastwise license in 1961 and assumed responsibility for disposal of the Coastwise waste. Because the majority of solid waste stored at Coastwise had previously been packaged for ocean disposal, the nature of the waste received at the INL is uncertain. However, the majority of

[c] NRC-Region V no longer exists. In the late 1990s, NRC-Region V was absorbed into Region IV, but AMWTP still uses the Region V designation for waste received during that period.

the waste was originally generated by LRL, Atomics International, and the General Atomic Company. [4, 41, 44, 72]

General Atomic Company

Also known as General Dynamics, General Atomic Division, San Diego CA. There are five waste streams from this generator: Science Building, Building E, Linear Accelerator, Hot Cells, and Waste Processing Yard. All materials from each facility went through the Waste Processing Yard before being sent to the INL. The following types of waste items were included in the shipments to the SDA: [4, 44, 72]

- Fuel fabrication items
- Laboratory equipment
- Activated metal
- Scrap metal, scrap wood, scrap glass
- Irradiated fuel
- Contaminated papers (hand towels, industrial wipes)
- Shoe covers
- Rubber gloves
- Lab coats
- Clothing
- Glassware
- Acid solidified in Portland cement
- Dirt, cement, and liquids solidified in plaster.

Other Non-INL Generators

The following non-INL generators and waste were not primary contributors to the INL SDA. The following are provided for information only.

Non-INL off-site generator's SDA waste contributions include waste received from the following areas: [4, 44, 72]

- Argonne National Laboratory-East: This waste is addressed in AK document RPT-TRUW-89, Acceptable Knowledge Document for Argonne National Laboratory-East Waste. [78]
- Atomic Energy Commission: Scrap metal, combustibles, glass, concrete
- Atlas Foundry and Machine Co., Tacoma, Washington: ^{60}Co source
- American Electronics: Radiation sources, laboratory waste, and solidified $^{144}Ce/ Cl_3$ solution
- Battelle Northwest Laboratories (BNL): Waste is from radionuclide research and plutonium studies. Only one shipment from BNL was received, and it occurred during 1983.
- Birdwell Division of Seismograph Service. Corp., Tulsa Oklahoma: Miscellaneous laboratory equipment
- Babcock and Wilcox, Nuclear Facilities, Lynchburg, Virginia: Empty stainless-steel fuel rods
- California Salvage Company: Laboratory equipment and animal carcasses and feces;
- Colorado School of Mines: Magnesium fluoride slag with 1% natural uranium, steel metallic salts and silicates, miscellaneous laboratory waste. It also includes some irradiated rock samples, some glassware laboratory waste, and rock samples in double drums.
- Dugway Proving Grounds: Animal waste and laboratory waste lead and scrap metal
- Fort Lewis, Washington: Radioactive electronic tubes
- Fort Douglas, Utah. Commanding Officer, Salt Lake City, Utah, no information available
- General Dynamics, Fort Worth. Texas: Waste NOS

- General Electric Co., Vallecitos Atomic Laboratory. Pleasanton. California: Core, reactor vessel, and loop components
- General Electric Co., Cincinnati, Ohio: Waste NOS
- Dept. of Health, Education and Welfare, Rad. Public Health service, Washington D.C.: Radium-contaminated laboratory waste
- Industrial X-Ray Engineers in Seattle, Washington: Radiation sources, steel encased and welded shut with a lead pig liner
- Isotope Specialties Co., Burbank, CA.: Magnesium-thorium scrap, laboratory equipment, sources, wipes, gloves, glassware, etc., associated with radionuclide labeling operations.
- Laboratory of Nuclear Medicine and Radiological Biology, UCLA, California: Paper equipment and biological waste contained in a cement matrix
- Marine Corporation Supply Center, Barstow, California: Electronic tubes and metascopes
- Memorial Hospital of Sheridan, Wyoming: Thirty-nine ^{60}Co wires sealed in concrete
- Metallurgical Engineers, Inc., Portland, OR.: Probably sources
- Nuclear Energy Company, Louisville, Kentucky and Pleasanton, CA.: Aluminum heat exchanger and waste containing ^{235}U and ^{238}U
- Nuclear Power Field Office, Ft. Belvoir, VA: Control rods
- Oregon Metallurgical Corporation, Albany, Oregon: Paper, graphite, clothing, steel, copper crucibles, and acid carboy
- PM-1 Nuclear Power Plant, Sundance Air Force Station, Sundance, Wyoming: Resin storage tank, cement, and empty tank
- San Antonio Air Materials Center, Kelly Air Force Base: Missile structural components, jet engine parts, fragments of fuel tanks, paper, and ash, miscellaneous metals (magnesium alloy, copper, tin, aluminum, and stainless steel); insulation; rubber; plastic; paper; glass; wire; dirt; wood; concrete; and ash
- Sacramento Signal Depot, Commanding General, Sacramento, CA: Radio transmitting and receiving sets, switchboards, tubes, plastic, electric instruments, and cobalt resinate

- Thiokol Chemical Corporation, Brigham City, Utah: Rags, wipes, tape, concrete, graphite, and solvent
- U.S. Army Chemical Center, Maryland: Radioactive waste packed in cement
- U.S. Army Edgewood Arsenal, Edgewood Arsenal, Maryland: Paper, disposable syringes, glass, plastic containers, and animal carcasses
- U.S. Bureau of Mines, Albany, Oregon, and Reno, Nevada: Ore processing waste includes rare earth elements
- USARAL Support Command and Fort Richardson, Seattle, WA: Resin-filled demineralizers
- University of Utah: Biological waste mixed in concrete
- University of Washington: Animals, animal tissue, isotopic solutions, evaporated residues, paper, syringes, clothing, laboratory glassware, planchets, benzene, carbon tetrachloride, methyl alcohol, and other biomedical waste
- U.S. Naval Radiological Defense Laboratory: Animal carcasses, waste paper towels, glassware, tools, and similar laboratory items
- U.S. Nuclear Corporation, Burbank, California, no information available
- Wah Chang Corporation, Albany, Oregon: Paper rags, furnace coke, carbon baffles, wax brick refractory, and small hand tools
- Washington State University: Bird, animal, and crayfish carcasses; Kim-wipes; paper towels; gloves; aluminum; and stainless-steel planchets.

In 1970, the AEC issued a policy requiring the segregation of waste contaminated with TRU radionuclides and mandated the storage of that waste on aboveground asphalt pads in retrievable containers. As a result, the shallow burial of TRU waste within the SDA ended and above-ground storage of TRU waste began in 1970.[1, 72]

The INL's historically contaminated areas are currently subject to clean-up/remediation under the CERCLA as well as other regulatory programs (e.g., RCRA corrective action). [13, 21, 25, 61]

Prior to the INL site being identified as a site requiring CERCLA remediation; the INL site had entered into a RCRA Consent Order with the State of Idaho to evaluate/remediate historically contaminated areas. On July 10, 1987, the U.S. Department of Energy Idaho Operations Office (DOE-ID) entered into a COCA with the State of Idaho, EPA, and the USGS

for remediating inactive waste disposal sites at the Idaho National Engineering and Environmental Laboratory (currently the INL).[13, 23]

In November 1989 the INL site was added to EPA's 40 Code of Federal Regulations (CFR) 300, "National Oil and Hazardous Substances Pollution Contingency Plan" (See 54 Fed. Reg. 44,184, November 21, 1989). [12], [d] NPL sites are required to be cleaned up through the implementation of EPA's CERCLA program. Once a federal facility is listed on the NPL, CERCLA program requirements become applicable. [13, 21], [e]

On December 4, 1991 the DOE-ID, EPA, and the state of Idaho signed a FFA/CO. [25] The FFA/CO implements the INL ER operations. The FFA/CO supersedes the prior agreements (i.e., 1987 COCA). Compliance with the FFA/CO achieves compliance with CERCLA, 42 U.S.C. § 9601, et seq. and satisfies the corrective action requirements of Sections 3004 (u) and (v) of RCRA, 42 U.S.C. § 6924(u) and (v), for a RCRA permit, and Section 3008 (h) 42 U.S.C § 6928 (h) for interim status facilities. Compliance with the agreement also satisfies the corrective action requirements for the State of Idaho Hazardous Waste Management Act, and meets or exceeds all applicable or relevant and appropriate requirements (ARARs) associated with federal and state laws and regulations to the extent required by Section 121 of CERCLA, 42 U.S.C. § 9621.[1, 2, 12, 23, 25]

In 1992, the U.S. Congress enacted the Federal Facilities Compliance Act (FFCA), which amended the Solid Waste Disposal Act (SWDA) for the purpose of establishing the grounds for state enforcement upon federal facilities (including fines, penalties, and imprisonment) for violations relating to the substantive or procedural requirement of the SWDA.[60] Following the enactment of the FFCA, the EPA and the NRC issued a joint agreement in1995 that provided additional information of compliance with storage requirements for both RCRA-regulated and NRC-licensed facilities.[32], [f]

The INL is divided into various waste area groups (WAGs) for purposes of conducting clean-up under the FFA/CO-CERCLA. WAG 7 is the INL RWMC area and includes the SDA.[g]

Each WAG was assigned operable units (OUs) for purposes of investigation and remediation under the FFA/CO. The RWMC SDA pits and trenches were identified as OU 7-13/14. [1, 2, 13]

The INL FFA/CO-CERCLA decisions/agreements are documented in the INL ER Administrative Record.[h]

---

d. The NPL is appendix B of the National Oil and Hazardous Substances Pollution Contingency Plan ("NCP"), 40 CFR Part 300.

e. Prior to CERCLA, remedial investigations were initially conducted to support clean-up under public Law 99-499, "Superfund Amendments and Reauthorization Act of 1986.[9]

f. This agreement also addresses similar storage issues identified by the DOE.

g. WAG 7 clean-up activities are coordinated through the FFA/CO-CERCLA ER program.

From 1969 through 1978, the INL conducted four primary retrieval investigations within the INL SDA (e.g., Pits 1, 2, 11, 12, and Trenches 1, 5, 6, 7, 8, 9, and 10) to gather information for later use during FFA/CO – CERCLA clean-up operations.[i]

The investigations provided valuable information for conducting subsequent FFA/CO-CERCLA ER operations at the INL SDA. The objectives of the INL SDA ER retrieval investigations included: [13, 14, 15, 16, 17, 18, 19, 20]

- Demonstrate the safe retrieval of recently buried drums and gain experience in handling and repackaging of these drums
- Develop and use the most economical storage container that would meet the 20-year interim storage criteria in subsequent remedial investigations
- Develop methods for handling and repackaging retrieved TRU waste
- Determine the risks and hazards involved with TRU waste retrieval
- Develop methods to minimize the risks and hazards of waste retrieval
- Provide data and information for the design of future retrieval equipment and facilities
- Provide data and information for the selection of a long-term waste management alternative
- Determine the extent of TRU isotope migrations into the soil in the storage pits and trenches.

1.2 INL SDA Pre-1980 Exhumations

A total of four ER investigations were performed prior to 1980. The investigations included:

A. A 1969 Pit 1 retrieval operation [13]

B. The 1971 Solid Radioactive Waste Retrieval Test (SRWRT) associated with Pits 2, 5, 10 and 11 (also called the ACI-120 project) [16], j

C. The IDR project from 1974 through 1978 associated with Pits 11 and 12 [14, 15] k

h. The INL Administrative record website located at http://ar.inel.gov/.

i. One other minor investigation associated with Pad A was conducted in 1978 and 1979; however, no waste was retrieved.

j. The SRWRT retrieval only targeted RFP wastes.

D. The EWR project from 1976 through 1978 associated with Pits 1 and 2, Trenches 1, 5, 6, 7, 8, 9, and 10.[17, 18, 19, 20]

Of the four pre-1980 ER investigations, only two resulted in waste being exhumed and transferred to the TSA-RE. The two INL SDA exhumations that contributed waste to the TSA-RE were associated with the: INL IDR Project, and the INL EWR Project. [14, 15, 17, 18, 19, 20]

1. IDR Project Wastes

The INL IDR Project exhumed waste from the INL SDA Pits 11 and 12, beginning in 1974 and ending in 1978. An estimated 20,262 drums were exhumed/retrieved and repackaged, stored, or disposed of during this investigation. During the entire program, 91.5% of the drums had good integrity and were intact. Approximately 18,029 drums were retrieved, overpacked into containers, and transferred to the TSA-RE, where they were placed into the AMWTP earth-covered storage as retrievable stored wastes.[15]

Intact drums that can be assigned as RFP wastes are not covered by this document. RFP wastes that have not been cross contaminated with other SDA wastes have been assigned RFP related IDCs and retain the RFP pedigree for purposes of waste management. RFP wastes are addressed within RPT-TRUW-56, Acceptable Knowledge Document for INL Stored Transuranic Waste - Rocky Flats Plant Waste.[43] IDR Project wastes that are not assigned as RFP wastes and/or have been cross contaminated with other wastes are included within this document.

2. EWR Project Wastes

The INL EWR Project examined and/or exhumed waste from Pits 1 and 2 and Trenches 1, 5, 6, 7, 8, 9, and 10 beginning in 1976 and ending in 1978. Approximately 820 containers were exhumed/retrieved and repackaged during this investigation.[17, 18, 19, 20]

Most of the EWR exhumed waste was in poor condition and was bagged and repackaged into 55-gallon drums or Tri-Wall containers (e.g., loose waste and drums with integrity issues). An estimated 820 containers were overpacked into M-III bins and transported to the TSA-RE as retrievable stored wastes.[17]

Intact drums that can be assigned as RFP wastes are not covered by this document. RFP wastes that have not been cross contaminated with other SDA wastes have been assigned RFP related IDCs and retain the RFP pedigree for purposes of waste management. RFP wastes are addressed within RPT-TRUW-56.[43] EWR Project wastes that are not assigned as RFP wastes and/or have been cross contaminated with other wastes are included within this document.

---

k. The IDR Project also conducted probing of Pits 6, 9 and 10. The probing activity did not result in waste being shipped to AMWTP TSA-RE

2.0 REQUIREMENTS

In accordance with the State of New Mexico RCRA permit for the WIPP facility (Attachment C, Waste Analysis Plan), prior to shipping waste to WIPP, AK must be obtained for each waste stream and the information must be placed into an auditable record.[50]

AK is obtained and placed into the AMWTP AK auditable records in accordance with MP-TRUW-8.13, Collection, Review, and Management of Acceptable Knowledge Documentation, which outlines the methods used by AMWTP personnel and/or subcontractors in the collection, review, compilation, evaluation, and management of AK documents. The procedure outlines the required information to be placed into AMWTP AK documents.[11]

Currently waste exhumations are being performed within the INL SDA under the Accelerated Retrieval Project (ARP). ARP wastes have been and are being shipped to WIPP under WIPP-approved Waste Stream Profile Forms (WSPFs). ARP waste contributors (i.e., initial on-site and off-site waste generators) are included as a subset of the wastes currently identified for Pre-1980 INL-Exhumed SDA Waste. Because ARP activities are currently the most similar to the Pre-1980 INL-exhumed waste, the AMWTP evaluated and incorporated applicable AK information from that Project (i.e., ARP) into the development of this document.[39, 40]

The AMWTP AK information for the Pre-1980 INL-Exhumed SDA Waste includes (but is not limited to) various AMWTP and FFA/CO-CERCLA documents as well as documents specific to the INL ARP, the IDR and EWR ER investigation projects.[4, 13, 14, 15, 17, 18, 19, 20, 39, 40, 41, 43, 44, 45, 46, 47, 48, 62, 72, 73, 74, 75, 76, 78, 79, 80]

3.0 WASTE MANAGEMENT LEVEL INFORMATION

3.1 Facility map and mission description

The land within the INL is administered by DOE and is classified by the Bureau of Land Management as industrial and mixed-use acreage. The primary mission of INL has varied over its history; however, common mission goals have stayed relatively the same.[13] The INL facility mission includes the operations conducted within the SDA.

The INL mission includes, but is not limited to, supporting DOE waste management objectives; delivering science-based solutions to the current challenges; completing environment cleanup responsibly; maintaining the scientific and technical talent, facilities, and equipment to best serve national and regional interests; conducting environmental research; preserving ecological and cultural resources; and conducting long-term stewardship.[13]

The SDA is located at the RWMC. The RWMC covers 119 acres in the southwestern quadrant of the INL Site. This includes the administration area of approximately 22 acres and the SDA, which is currently estimated at 97 acres. The RWMC SDA served as a radioactive disposal

site from 1952 to 1997. Between 1952 and 1997, approximately 215,000 m^3 (1,033,654 fifty-five gallon drum equivalents) of radioactive waste was buried at the SDA.[13]

In 1952, 13 acres were set aside and designated as the INL SDA, which was established for disposal of solid radioactive waste. Burial of waste began in 1954, with waste from the RFP. In 1958, the SDA was expanded to 88 acres. In 1988, the security fence was relocated to its current size of 97 acres.

From 1952 to 1970, radioactive waste was buried in the INL SDA pits, trenches, and soil vault rows. Although not strictly adhered to, the pits were used primarily for disposal of RFP waste; whereas the trenches were primarily used for INL wastes.[17, 18, 72] The INL SDA pits and trenches received waste from multiple on-site and off-site sources (i.e., waste generators) for disposal. Containerized waste was either stacked or dumped into the pits and trenches based on the disposal practices at the time.[72] Starting in 1970, below-ground disposal of TRU waste was halted in favor of above-ground retrievable storage configuration for TRU waste.[13], [1] The INL SDA has historically received a wide variety of radioactively contaminated waste for storage, treatment, and/or disposal (e.g., TRU, low-level waste [LLW], defense, and non-defense related wastes).

Figure 2 illustrates RWMC showing the location of the RWMC TSA as well as the SDA pits, trenches, and soil vaults.

1. Non- TRU waste could still be disposed of within the SDA after 1970.

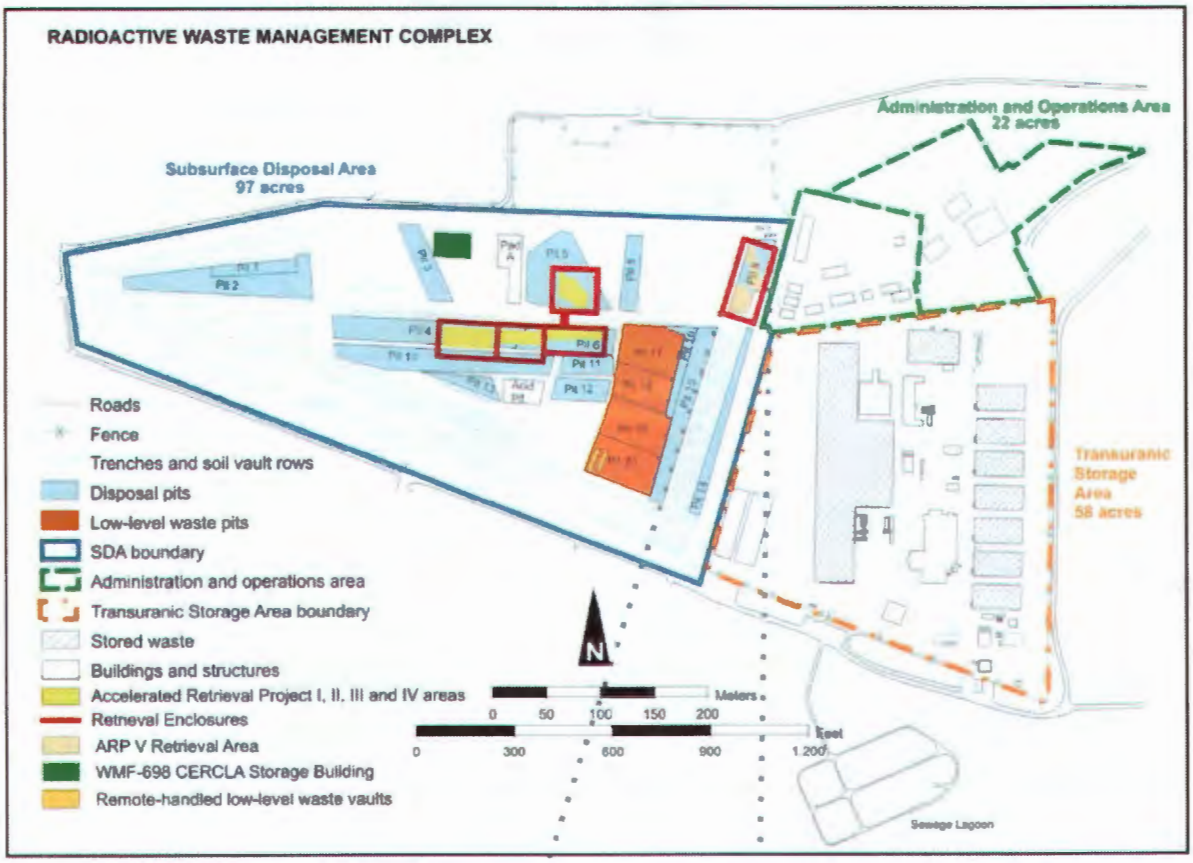

Figure 2. Map of the RWMC showing the location of pits, trenches, and soil vaults in the SDA.

3.2 Defense Determination and WIPP Land Withdrawal Act Assessment

Since its development in 1952, the INL SDA has received and disposed of both defense and non-defense related waste from various on-site and off-site generators. At one point in time, there may have been a general practice of placing TRU wastes in the pits, while LLW was generally placed in the trenches; however, segregation practices for disposal of TRU wastes, LLW, defense, or non-defense related wastes into the SDA pits and trenches were not routinely employed during the early SDA operations (i.e., before 1970).[53, 72] [m]

From 1952 until 1970, the INL SDA received and disposed of a variety of radioactive waste (including TRU wastes) from multiple sources.[n] In 1970, the AEC issued a policy requiring the segregation of TRU waste and the storage of TRU waste on aboveground asphalt

m. Other sources report that between April 1954 and November 1957, Trenches 1 through 10 were filled with intermixed waste from all waste generators and there was no segregation.[17]

n. At the time of disposal, TRU waste included material with concentrations of TRU isotopes > 10 nCi/g.[51, 72]

DIVIDER PAGE

RECORD
CMB 5-3-10

AMWTP Advanced Mixed Waste Treatment Project	AK Source Document Review Summary	Form-1068, Rev. 4 Effective: 01/08/09 Page 1 of 1

Implementing Document: MP-TRUW-8.13

1. Source Document Tracking Number: P859S	2. Revision: 0

3. Category

- [x] Published Documentation
- [ ] Unpublished Documentation
- [ ] Correspondence
- [ ] Discrepancy

4. **Title/Description Information:** Supercompactor Liquid Treatment Capabilities, Evaluation and Conclusion

Document Number: RPT-82
Revision: 0
Author: AMWTP
Date: 6/2/2009

5. AK Element	6. Generator Or Waste Type(s)	7. Location In Source Doc.	8. AK Information Summary:
WM3, WM5	BN	all	The document discuses the supercompaction process and efficiency of compaction as it relates to parent and internal containers.
WS5, WS6, WS8	BN-510, BN-510.1	All	The document discusses HWNs associated with the unused commercial chemical products and concludes that these HWNs do not apply to supercompacted waste. The document addresses prohibited liquids.

9. **Document Summary:**

The document establishes the capabilities of treating liquids through the supercompaction process and listed waste assignments associated with unused commercial chemical products. The document is used in conjunction with AK to profile waste to WIPP.

The most recent revision of this document can be found on EDMS.

10. **Source Document Data Limitations (if any):**

The document could change in the future if new information is obtained. The document only partially addresses WM and WS elements. Revision 0 of RPT-82 identifies BN510 WSPF and RPT-TRUW-30 for supercompacted waste; however, it is also applicable to any WSPF and associated AK summary for supercompacted waste.

11. AK Expert:	TIM VENNEMAN (Print)	(Sign)	3/30/2010 (Date)

AMWTP
Advanced Mixed Waste Treatment Project

RPT-82

Supercompactor Liquid Treatment Capabilities, Evaluation and Conclusion

Advanced Mixed Waste Treatment Project

Enrique Torres
TRU Programs Manager

6/2/09
Date

Next Periodic Review: N/A

Supercompactor Liquid Treatment Capabilities, Evaluation and Conclusion

CONTENTS

1.0 INTRODUCTION 1

2.0 DISCUSSION 2

2.1 HWNs – 40 CFR 262.11 and AMWTP RCRA treatment facility's WAC [1, 2] 2

2.2 HWNs – WIPP RCRA Permit [3] 4

2.3 Hazardous Waste Management Act (HWMA)/RCRA Supercompactor Treatment Permit/Operations Overview [2] 7

3.0 COMPLIANCE WITH THE WIPP WAC and WAP LIQUID LIMITS [3] 9

4.0 CONCLUSION 10

5.0 REFERENCES 12

FIGURES

Figure 1. Cross section of supercompacted debris container (i.e., Puck). 8

Figure 2. Cross section of supercompacted debris container (i.e., Puck). 8

ACRONYMS

AK	acceptable knowledge
AMWTP	Advanced Mixed Waste Treatment Project
CBFO	Carlsbad Field Office
CFR	Code of Federal Regulations
EPA	Environmental Protection Agency
HSG	headspace gas analysis
HWD	hazardous waste determination
HWN	hazardous waste number
HWMA	Hazardous Waste Management Act
IDC	item description code
PCB	polychlorinated biphenyl
PK	process knowledge
PRQL	program quantitative limit
RCRA	Resource Conservation and Recovery Act
RTR	real-time radiography
SC	Supercompactor
TRU	transuranic
TSDF	treatment storage and disposal facility
VE	visual examination
WAC	Waste Acceptance Criteria
WAP	Waste Analysis Plan
WIPP	Waste Isolation Pilot Plant
WSPF	waste stream profile form

Supercompactor Liquid Treatment Capabilities, Evaluation and Conclusion

1.0 INTRODUCTION

This report outlines the AMWTP's position on how the Waste Isolation Pilot Plant (WIPP) Waste Acceptance Criteria (WAC) and Waste Analysis Plan (WAP) liquid limits are achieved for Advanced Mixed Waste Treatment Project (AMWTP) supercompacted debris waste. The following information also outlines how the AMWTP transuranic (TRU) program evaluates and/or applies Environmental Protection Agency (EPA) listed hazardous waste numbers (HWNs) to supercompactor feed containers and to applicable residual liquids within a feed container. This report does not address HWNs other than those applied by the TRU program. [a]

This report is relevant only in relation to item description codes (IDCs) that are authorized as supercompacted debris feed waste within RPT-TRUW-30 that is subsequently processed through the AMWTP Waste Management Facility 676 for purposes of shipment to the WIPP facility under the BN510 WIPP-approved waste stream profile Form (WSPF). [5]

Transuranic waste that is disposed at the WIPP must meet the WIPP criteria for residual liquids as outlined with the WIPP WAP and WAC. [3] Current WIPP requirements limit the amount of RCRA regulated liquid by three conditions:

1. Waste shall contain as little residual liquid as is reasonably achievable by pouring, pumping and/or aspirating, and internal containers shall contain less than 1 inch or 2.5 centimeters of liquid in the bottom of the container.

2. Total residual liquid in any payload container (e.g., 55-gallon drum or standard waste box) may not exceed one volume percent of that container.

3. Payload containers with the U134 HWN waste shall have no detectable liquid.

Supercompaction of debris wastes results in compliance with applicable prohibitions associated with residual liquid by effectively removing residual liquids to an extent that is equivalent to standard industrial emptying practices of pouring, pumping, or aspirating. Through supercompaction, 55-gallon feed drums that contain inner containers with residual liquids (i.e., less than 1") will meet the definition of Resource Conservation and Recovery Act (RCRA) empty (for non-acute hazardous waste) due to the compression force exerted upon the 55-gallon container and the resulting breaching of both the 55-gallon feed drum and any inner container.

The resulting puck (i.e., the compacted 55-gallon feed drum) and the 100 gallon product drum in which the pucks are placed will meet the current WIPP payload requirement for liquids.

[a] Other EPA regulated compounds or chemicals are not addressed within this report either due to the compound or chemical being prohibited as feed to the supercompactor (e.g., PCBs) or due to the compound or chemical being out of scope with the intent of this document (e.g., beryllium, asbestos).

Supercompactor Liquid Treatment Capabilities, Evaluation and Conclusion

The supercompactor is prohibited from processing wastes will result in the application of HWNs other than those currently authorized by the WIPP-approved WSPF (i.e., BN510). The WIPP-approved BN510 WSPF does not identify any RCRA acutely hazardous waste numbers or the RCRA U134 HWN. Acutely hazardous waste and waste that are assigned a U134 HWN are prohibited as feed to the supercompactor.

2.0 DISCUSSION

The AMWTP assigns EPA HWNs to debris waste in accordance with current 40 CFR 262.11 requirements prior to supercompaction as required by the RCRA program and their associated AMWTP treatment storage and disposal facility (TSDF) RCRA permits. In addition to the AMWTP-specific RCRA requirements, HWNs are assigned to WIPP waste in accordance with WIPP RCRA characterization requirements as outlined in the WIPP RCRA permit. [3]

2.1 HWNs – 40 CFR 262.11 and AMWTP RCRA treatment facility's WAC [1, 2]

Under the RCRA program (including New Mexico's applicable state regulations) 40 CFR 262.11 allows for the generator of the waste to assign HWNs based on process knowledge (PK) and/or sampling and analysis. All WIPP waste is subjected to an acceptable knowledge (AK) evaluation which incorporates RCRA PK (i.e., PK is a subset of AK).

Feed to the AMWTP supercompactor undergo hazardous waste determinations (HWDs) prior to supercompaction. For TRU waste that will be disposed at WIPP this determination is accomplished through a thorough in-depth evaluation of AK information (as required by the WIPP WAP). The AK information is augmented with Real-Time Radiography (RTR)/Visual Examination (VE) and/or applicable sampling and analysis [e.g., headspace gas analysis (HSG)].

Hazardous wastes are either characteristically hazardous or listed hazardous waste. Characteristically hazardous wastes are identified in 40 CFR 261, Subpart C and listed hazardous waste are identified in 40 CFR 261, Subpart D.

A. Characteristic Hazardous waste (i.e., D-coded wastes)

Characteristic hazardous waste HWNs are applied based on AK/PK and where applicable, by sampling and analysis results.

- The AMWTP has assigned characteristic HWNs to supercompactor feed waste as based on RCRA and WIPP requirements.

B. Listed Hazardous Waste (i.e., F, K, U and P-coded wastes)

F-listed wastes: F-listed wastes are hazardous waste from non-specific sources. These F-listed HWNs include, but are not limited to, a variety of spent solvents as well as electroplating waste and inherently hazardous waste. In all cases these F-listed wastes are used or spent chemicals.

- The AMWTP supercompactor feed waste have F-listed waste assigned based on AK/PK and as applicable from sampling and analysis results as required by the WIPP WAP.

K-listed wastes are from specific sources. These types of listed waste are associated with specific waste generation processes.

- The AMWTP does not have K-listed waste.

P and U-listed waste are discarded unused commercial chemical products, off-specification species, container residues, and spill residues thereof and must consists of the commercially pure grade of the chemical, any technical grade that are produced or marketed and all formulation in which the chemical is the sole active ingredient. The P and U-listed status does not apply to a material such as a manufacturing process waste that contains any of the chemicals lilted in 40 CFR 261.33 (e) or (f).

P-listed wastes are designated as acutely hazardous waste. In addition to P-listed waste, any other listed wastes specifically identified with the hazard code of "H" within 40 CFR 261 Subpart D are designated as acutely hazardous waste.

Two critical evaluations must be conducted in order to determine the applicability of a P or U-listed waste.

1. The waste source must be an unused commercial chemical product, unused off-specification species, or container residues, or spill thereof

2. The constituent of concern must be the sole active ingredient.

Unused and sole active ingredient determinations associated with P and U- listed waste determinations cannot be made through testing (e.g., core sampling and/or HSG). In all cases specific generator information must be known to determine a P or U-listed status (i.e., is the waste an unused commercial chemical product and does it contain a sole active ingredient listed in 40 CFR 261.33?).

Supercompactor Liquid Treatment Capabilities, Evaluation and Conclusion

P or U-listed HWNs are unique HWNs and require specific generation information (i.e., unused chemical, sole active ingredient). Simply having a chemical present at a generator's site (e.g., chemical inventory) does not reflect an actual discharge of the unused commercial chemical product/sole active ingredient into a waste stream (i.e., IDC). P and U-listed HWNs are not assigned to wastes without generator information indicating disposal of an unused commercial chemical product whose constituent is the sole active ingredient or other objective evidence that confirms the listing criteria into a particular waste stream.

Information relating to the type and nature of a waste comprising an IDC or waste stream is captured in the AK documentation. This information would include any documentation that an unused commercial chemical product/sole active ingredient source was discharged (or otherwise placed) into an IDC/waste stream. If AK reflects that unused commercial chemical product/sole active ingredient was discharged (or otherwise placed) into an IDC/waste stream then the applicable P or U-listed HWN would apply to that particular IDC/waste stream. Each debris waste stream is evaluated through an in-depth review of AK prior to approving the IDC for supercompactor feedstock. Applicable HWNs are assigned accordingly prior to supercompaction.

- Current AK for supercompactor feed waste does not support the assignment of P or U-listed waste to supercompactor feed containers.

Prior to undergoing treatment by supercompaction, the AMWTP RCRA permit requirements (i.e., 40 CFR 264.13) mandates that TRU waste must be fully characterized and meet the waste acceptance criteria for the receiving facility. A completed HWD and known EPA HWNs must be documented to ensure acceptability into the AMWTP supercompactor treatment facility and for safe, compliant operations. Compliance with the state of Idaho's AMWTP RCRA permit is accomplished through a combination of AK, RTR/VE and/or sampling and analysis (as applicable).

As a result of the above characterization requirements, supercompactor feed waste have known HWNs prior to supercompaction. In addition to complying with current state of Idaho AMWTP Hazardous Waste Management Act (HWMA)/RCRA characterization requirements, the AMWTP only authorizes supercompactor feedstock that will result in a supercompacted puck that is complaint with the HWNs as identified on the WIPP-approved WSPF for supercompacted waste (i.e., BN510 WSPF).

2.2 HWNs – WIPP RCRA Permit [3]

Currently under the WIPP program, waste cannot exceed the liquid limits established in the WIPP permit. It makes no difference if the liquid is proven to be non-hazardous (e.g., drinking water); the prohibition is a stand-alone requirement and is not related to assigning HWNs.

Supercompactor Liquid Treatment Capabilities, Evaluation and Conclusion

WIPP HWN assignment is performed through implementation of the applicable WIPP WAP criteria. For debris waste, the WIPP WAP establishes AK documentation as the primary means of assigning HWNs. Applicable RTR/VE and head-space gas sampling and analysis activities serve as augmentation tools for AK. Applicable augmentation methods are used in conjunction with AK and are done prior to supercompaction to ensure compliance with the AMWTP HWMA/RCRA permit (e.g., waste acceptance criteria and HWN assignment) and to ensure that the supercompacted waste is acceptable and consistent with the HWNs associated with the WIPP RCRA Part A and the WIPP-approved waste stream profile.

A general overall characterization of debris waste for shipment to WIPP is as follows:

AK is obtained for the specific waste IDC that is targeted for feed to the supercompactor. The HWNs are assigned based on AK and the IDC is entered into RPT-TRUW-30 as an approved feedstock to the supercompactor. [b] The assignment of listed and characteristic HWNs is initially evaluated through the review of AK and further evaluated through headspace gas sampling and analysis per the WIPP WAP. In addition to AK documentation, the assignment of listed HWNs can take place per the WIPP WAP. In accordance with the WIPP WAP, where the 90% upper confidence limit (UCL^{90}) for a constituent is detected above the program quantitative limit (PRQL) and the source of the constituent is unknown, the applicable F-listed HWNs will be assigned.

As containers are processed, each individual container undergoes RTR or VE prior to supercompaction. RTR/VE operators are certified through a formal AMWTP certification program and as part of their overall responsibilities evaluate liquids and other prohibited conditions/materials within each container for unique or special conditions (amount of liquid, aerosol cans, PCBs etc.).

Common glass and poly bottles containers that are routinely viewed through RTR/VE in which minor amounts of liquid are noted are not considered P or U-listed waste unless AK, generator supplied information, or visual examination results specifically identifies sources of P or U-listed waste discharged or otherwise placed in the waste stream. Supporting information that common glass and poly bottles/containers currently being processed do not contain (and are not expected to contain) P or U-listed waste sources are as follows:

1. The discharge or placement of P or U-listed (i.e., unused commercial chemical products/sole active ingredient chemicals) within supercompactor feedstock is not identified in any AK documents.

2. P-listed and U-listed waste with the "H" hazard code are designated as acutely hazardous waste. These types of chemicals are controlled chemicals and would not be found in routine work areas, but rather in the controlled laboratories settings.

---

[b] The IDC(s) must have the same HWNs as that approved within the BN510 WSP. If not the waste is not authorized as feed to the supercompactor until a new BN510 WSP is submitted and approved by WIPP.

3. EPA-designated acutely hazardous waste generated within laboratories would have been retained within the original container and would not have been TRU-contaminated.

4. Laboratories that engaged in removal of EPA-designated acutely hazardous waste liquids from the original source container would trigger a used status and no longer be considered P or U-listed wastes unless objective evidence indicates otherwise.

5. Department of Energy (DOE) facilities are required to have an excess chemical program in accordance with DOE order 5480.2. This program would have addressed special management practices for unused commercial chemical products. For example, disposal of unused commercial chemical products/sole active ingredient within original containers would have been through the excess chemical or Low Level Waste (LLW) program.

6. To-date, the AMWTP has performed over 88,000 visual examinations events. These examinations have resulted in no observations associated with a manufacture's commercial chemical product bottles that would result in assignment of a P or U-listed waste HWN.

Prior to transporting wastes to the WIPP facility, HWNs are assigned to waste in accordance with the conditions and protocols as outlined within the WIPP permit. These HWNs are identified in a WIPP WSPF package and undergo approval by WIPP personnel prior to shipment. In the event that a new hazardous waste number is assigned to a waste stream that was not previously identified in the WIPP-approved waste stream profile (based on AK, RTR/VE or sampling and analysis results), verification that the HWN is identified on the WIPP RCRA Part A takes place and a new waste stream profile is developed and submitted for WIPP approval prior to shipment of the waste stream to WIPP.

Individual containers are verified to meet the WIPP-approved waste stream profile through AK documentation, augmentation consisting of RTR/VE, and/or applicable sampling and analysis. The AMWTP certification process includes validation steps to ensure that waste shipped to WIPP will only carry the WIPP-approved HWNs and are addressed specifically addressed within the WIPP-approved waste stream profile form.

The AMWP is responsible for performing adequate and accurate HWDs associated with the AMWTP and WIPP RCRA permit requirements. The AMWTP complies with all AMWTP and WIPP RCRA permit requirements associated with assigning HWNs.

The AMWTP's fulfillment of regulatory characterization requirements imbedded within the state of Idaho HWMA and the WIPP RCRA permit requirements results in full compliance with the state of Idaho and the state of New Mexico characterization requirements.

2.3 HWMA/RCRA Supercompactor Treatment Permit/Operations Overview [2]

The Idaho HWMA RCRA permit cites specific requirements and authorizations for the AMWTP treatment activities which include information specific to receipt of liquids within the supercompactor. The following summarize two critical RCRA permit conditions that are also associated with the WIPP-WAC.

The Permittee may not manage the following waste in the Supercompactor Unit:

- MW containing free liquids greater than 5% by volume.
- MW containing small intact containers with an excess of 1 inch of liquids.
- MW with unknown EPA HWNs or unknown IDCs/WG.

RTR/VE is used to verify compliance with the RCRA permit associated with the AMWTP's supercompactor (i.e., supercompactor's RCRA WAC). As described in Attachment 2 of the AMWTP RCRA permit, prior to treating waste (i.e., supercompaction) RTR or VE is used to examine 100% of the wastes to identify the waste matrix and identify any liquids, prohibited items or other special case waste items.

The AMWTP further limits the total amount of liquid within containers destined for supercompaction through internal procedures (i.e., INST-FOI-26, Advanced Mixed Waste Treatment Facility [AMWTF] Receipt and Storage).[4] In addition to the state of Idaho's HWMA WAC requirements relating to receipt of liquids into the supercompactor, AMWTP internal company procedures require that the total volume of liquid in containers destined for supercompaction must be < 1% by volume of the 55-gallon drum and inner containers must contain less than 1" of residual liquid.

The Supercompactor is a specially designed unit that treats containers of mixed waste debris by mechanical compaction. Before supercompaction, the drum is processed through the drum piercing station. The compaction process proceeds in two phases. First, the main ram is lowered, initially powered by a low-force ram, which forces the air out of the top section of the drum. After the first compaction phase, high pressure fluid is supplied to the main high-force compaction ram and is maintained at a higher pressure until the final pressure or maximum travel distance is attained. The compaction process provides a compaction pressure of 2,240 tons. This force reduces the puck height (on average) to one-fifth of the original drum height. The compacted container results in a "puck".

The impact to the contents of a puck is illustrated in Figures 1 and 2 below. The Figures show the cross section of a compacted puck drum containing debris waste. As shown, compaction eliminates void spaces.

Figure 1. Cross section of supercompacted debris container (i.e., Puck).

Figure 2. Cross section of supercompacted debris container (i.e., Puck).

Supercompactor Liquid Treatment Capabilities, Evaluation and Conclusion

When liquids are released during compaction, they are characterized and managed on a case-by-case basis. Sloped glovebox floors and a sump are provided to collect any liquids produced during the compaction process. The leak-tight base of the glovebox containment has sufficient capacity to hold a worst-case leak of 55-gallons. The sump has a capacity of approximately 2.5 gallons and is equipped with a sensor to detect liquid level. The sensor alarms when the sump is 90% full.

3.0 COMPLIANCE WITH THE WIPP WAC and WAP LIQUID LIMITS [3]

Compliance with current liquid prohibitions within the WIPP WAP and WIPP WAC must be achieved in three areas. Each of these areas is discussed below relative to supercompaction.

WIPP Condition 1: Waste shall contain as little residual liquid as is reasonably achievable by pouring, pumping and/or aspirating, and internal containers shall contain less than 1 inch or 2.5 centimeters of liquid in the bottom of the container.

The supercompactor provides sufficient compaction pressure to breach any intact internal and/or outer container and liquid released from within those internal and/or outer containers are designed to be captured in the glovebox (and subsequently captured in the form of squeezants). The pressure exerted on the feed container through the supercompaction process effectively breaches any outer and/or internal container. The breaching and extreme pressure exerted on the waste satisfies, and is equivalent to, the intent associated WIPP permit criteria (i.e., WIPP WAP and WIPP WAC) relating to waste containing "as little residual liquid as is reasonably achievable by pouring, pumping and/or aspirating". Once a container has undergone supercompaction and all internal and outer containers are breached, the waste (i.e., puck) is no longer classified as a "container" but is a single piece of debris waste.

Compliance with Condition 1 relating to residual liquids and internal containers is achieved through the combination of the supercompactor compaction force, the AMWTP administrative controls prohibiting any feed containers destined for the supercompactor to contain greater than 1 % by volume of the 55-gallon drum, and the AMWTP RCRA permit conditions establishing that inner containers must contain less than 1" of residual liquid prior to compaction.

WIPP Condition 2: Total residual liquid in any payload container (e.g., 55-gallon drum or standard waste box) may not exceed 1 volume percent of that container.

After a container has undergone supercompaction, which breaches all layers of confinement including all internal containers, the waste (i.e., puck) is no longer classified as a "container" (see Figures 1 and 2). Once loaded into 100-gallon product drums for shipment to WIPP, the applicable WIPP liquid prohibitions are met.

Supercompactor Liquid Treatment Capabilities, Evaluation and Conclusion

Through AMWTP internal procedures, the AMWTP HWMA/RCRA Treatment Permit WAC for the supercompactor and the compaction force which results in removal of liquids from feed containers; compliance with Condition 2 relating to <1% total residual liquid, by volume, within the payload container is achieved.

WIPP Condition 3: Payload containers with U134 hazardous waste number (HWN) waste shall have no detectable liquid.

The AMWTP does not authorize the supercompaction of any source waste containing the U134 HWN.

Compliance with HWN assignment for WIPP waste is as previously noted in the regulatory analysis overview section above.

4.0 CONCLUSION

The AMWTP supercompactor is regulated by a State of Idaho HWMA/RCRA Treatment Permit. [2] In addition to the state of Idaho HMWA requirements, AMWTP TRU waste is also subject to the terms and conditions outlined in the WIPP RCRA permit (and associated WIPP WAC and WAP). [3] Prior to acceptance into the AMWTP supercompactor, all TRU waste is subject to the state of Idaho HWMA/RCRA characterization requirements and are evaluated in relation to the HWNs identified on the current AMWTP WIPP-approved BN510 WSPF. [1, 2] These requirements include compliance with 40 CFR 262.11, 40 CFR 264.13 and the HWN assignment noted in the WIPP-Approved WSPF. With the exception of those listed HWNs assigned based on exhibiting a characteristic of a hazardous waste only, all applicable listed HWNs are carried over to supercompacted debris waste (pucks) and are documented within WIPP-approved WSPFs.

The AMWTP complies with the State of Idaho and the WIPP RCRA permit requirements though application of AK, RTR/VE, treatment of waste, and sampling and analysis (as applicable). Listed hazardous waste numbers are assigned to TRU waste based on the state of Idaho HWMA requirements, AK and the WIPP WAP. EPA listed waste can either be "F-listed, K-listed, P-listed or U-listed."

As previously noted a P or U-listed waste status is established through: generator supplied information (i.e., AK), or through VE confirmation of potential P or U-listed waste is present in a waste (e.g., un-opened reagent-grade bottle), and confirmation that the non-empty container meets the definition of an unused, commercial chemical product and that the chemical contained in the non-empty container is a sole active ingredient.

The mere presence of minor amounts of liquid within supercompactor feedstock prior to supercompaction does not reflect a P or U-listed status. In addition, the detection of any constituent through debris HSG analysis does not reflect an unused commercial chemical/sole active ingredient status.

Supercompactor Liquid Treatment Capabilities, Evaluation and Conclusion

Currently AK does not reflect any P or U-listed waste associated with the supercompacted feedstock waste. In addition to AMWTP's AK documentation there has been no visual verification that P or U-listed waste sources are contained in the supercompacted debris waste. To-date more than 88,000 visual examination events have taken place with no evidence that non-empty, unused, commercial chemical product containers are contained within debris waste.

The AMWTP does not manage wastes that are classified K-listed waste.

Sampling and analysis of TRU waste may result in the application of a toxicity characteristic HWN or an F-listed HWN. The applicable HWN is assigned in accordance with the WIPP WAP (i.e., the applicable toxicity characteristic or F-listed HWN is assigned when the UCL_{90} is above the PRQL). Both F-listed and toxicity characteristic HWNs (as applicable) are assigned to the AMWTP BN510 WSPF.

Through AK, RTR/VE, and applicable HSG analysis of supercompactor feedstock and product drums, sufficient evidence exists to support the HWNs currently assigned to the WIPP-approved WSPF for supercompacted waste. The current list of approved HWNs for supercompacted waste can be found within the most current WIPP-approved BN510 WSPF.

Debris waste that contain limited amounts of residual liquids within internal containers is effectively treated through the AMWTP supercompaction treatment method and results in compliance with the WIPP permit requirements (i.e., WIPP WAP and WIPP WAC) relating to liquid prohibitions. [6] The AMWTP supercompactor is specifically designed to treat debris waste and limited amounts of residual liquids through compaction. Per the AMWTPHWMA/RCRA Permit and through AMWTP administrative controls, the AMWTP may manage mixed waste containing up to 1% by volume liquids and small intact containers containing up to 1 inch of liquids within the supercompactor unit. Through the AMWTP HWMA/RCRA treatment permit's WAC and AMWTP administrative procedures, the amount of residual liquid that enters the supercompactor on a drum-by-drum basis is controlled. This control ensures that the amount of residual liquid within each container meets the conditions as outlined in the WIPP RCRA permit prior to accepting waste for supercompaction. The compaction force exerted on the feed containers effectively removes residual liquid from feed containers (including internal containers containing residual liquid) equivalent to that achieved by normal means (e.g., pumping, pouring, aspirating etc.).

The AMWTP and the State of Idaho consider the supercompactor a viable method for treating limited amounts of containerized and un-containerized residual liquids within debris waste. This position is supported by the WAC for the supercompactor (i.e., limited amounts of residual liquid can be processed in the supercompactor), and the exemption of AMWTP supercompactor product drums (i.e., product drums contain supercompactor pucks) from secondary containment requirements within the HWMA/RCRA permit issued by the State of Idaho.

5.0 REFERENCES

1. 40 Code Federal Regulations Parts 260-270. Current revision.
2. Advanced Mixed Waste Treatment Project Hazardous Waste Management Act/Resource Conservation and Recovery Act permit. Current revision.
3. WIPP Hazardous Waste Facility Permit NM 4890139088-TSDF. Current revision.
4. INST-FOI-26, AMWTF Receipt and Storage. Current Revision.
5. RTP-TRUW-30, Acceptable Knowledge Summary for Supercompacted Debris Waste (BN510). Current Revision.
6. MP-TRUW-8.1, Certification Plan for INL Transuranic Waste, current revision

AMWTP Advanced Mixed Waste Treatment Project	AK Source Document Review Summary	B-2013-0313 RECORD JCOLLINS 07/23/2013	Form-1068, Rev. 4 Effective: 01/08/09 Page 1 of 1

Implementing Document: MP-TRUW-8.13

1. Source Document Tracking Number: C1308A	2. Revision: 0

3. Category

- ☐ Published Documentation
- ☐ Unpublished Documentation
- ☑ Correspondence
- ☐ Discrepancy

4. Title/Description Information: Bettis Debris Waste as Mixed Low-Level Waste Feedstock to the Supercompactor – SPC-013-13

Document Number: SPC-013-13

Revision: 0

Author: Steve Carpenter, Acceptable Knowledge/Site Project Manager

Date: 07/18/2013

5. AK Element	6. Generator Or Waste Type(s)	7. Location in Source Doc.	8. AK Information Summary:
WM2, WM3	BL	All	Bettis Debris Waste as Mixed Low-Level Waste Feedstock to the Supercompactor
WS4, WS6	BL-010, BL-020	All	Bettis Debris Waste as Mixed Low-Level Waste Feedstock to the Supercompactor

9. Document Summary:

Memorandum from Steve Carpenter to George Byram, TRU Programs Manager. The purpose of this memorandum is to present the justification for Bettis debris waste Item Description Codes (IDCs) BL-010, Rags, Gloves, Poly S5390, and BL-020, Non-compressible, Non-combustible S5420, as Mixed Low-Level Waste (MLLW) feedstock to the supercompactor.

Also, this memo notes that: AK report RPT-TRUW-83, Acceptable Knowledge summary for Supercompacted Debris Waste (BN510.1), presents the AK for the TRU WIPP approved BN510.1 waste stream and lists the authorized feedstock IDCs in Appendix A. Bettis debris waste BL-010 and BL-020 are not listed. The HWNs associated with BL-010 and BL-020 are a subset of the HWNs listed for BN510.1 waste stream in RPT-TRUW-83. The radionuclides associated with BL-010 and BL-020 are a subset of the radionuclides listed for BN510.1 waste stream in RPT-TRUW-07. The BL-010 and BL-020 may be included as MLLW feedstock to the supercompactor without decontamination. The Bettis debris waste may not be combined or commingled with feedstock to the BN510.1 waste stream.

10. Source Document Data Limitations (If any):

None identified at this time.

11. AK Expert:	Julie Collins (Print)	Julie Collins (Sign)	7/23/2013 (Date)

Idaho Treatment Group

Idaho Treatment Group, LLC • 850 Energy Drive, Suite 100 • Idaho Falls, ID 83401-1502 • t: 1.208.557.7301 • f: 1.208.557.0963

To: George Byram, TRU Programs Manager

From: Steve Carpenter, Acceptable Knowledge/Site Project Manager SC

Date: July 18, 2013

Re: Bettis Debris Waste as Mixed Low-Level Waste Feedstock to the Supercompactor – SPC-013-13

The purpose of this memorandum is to present the justification for Bettis debris waste Item Description Codes (IDCs) BL-010, Rags, Gloves, Poly S5390, and BL-020, Non-compressible, Non-combustible S5420, as Mixed Low-Level Waste (MLLW) feedstock to the supercompactor.

The Acceptable Knowledge (AK) for Bettis waste is presented in RPT-TRUW-60, *Acceptable Knowledge Document for the INL Stored Waste – Bettis Atomic Power Laboratory*. The Hazardous Waste Numbers (HWNs) for Bettis debris IDCs BL-010 and BL-020 are listed as D008, F001, and F002 for BL-010 and D002, D008, F001, and F002 for BL-020. The D002 HWN was conservatively identified based on the potential for free liquids in excess of WIPP-WAC limits; however, after treatment, D002 will not be assigned. AK for debris waste indicates the potential for the toxic metal lead (D008) to be present in the waste. Lead in the form of plates and shot was used as shielding, and rubber gloves, assumed to be leaded rubber gloves, may have been used to handle materials in gloveboxes during ceramic fuels manufacturing. Consequently, as a conservative measure, the EPA characteristic HWN D008 is identified for the debris waste.

Oxylene M-6 (a mixture of 1,1,2-trichloro-1,2,2-trifluroethane and methylene chloride) was used in ceramic fuel pellet manufacturing as a Carbowax 6000 solvent during the agglomeration steps of the process. Carbon tetrachloride, tetrachloroethylene, trichloroethylene, and 1,1,1-trichloroethane were identified in the AK record as being used on-site for their solvent properties and/or were detected during environmental monitoring. Tetrachloroethylene was identified as being used in historical operations to wipe down fabricated fuel rods after swaging. Therefore, F001 and F002 are conservatively applied to debris waste

Unirradiated ^{233}U and ^{232}Th from the fabrication of ceramic fuel pellets during development of the LWBR during the 1970s and 1980s form the bulk of radioisotopes in BAPL wastes. Based on the composition of the uranium and thorium oxide fuel the most prevalent radionuclides by mass are ^{232}Th and ^{233}U. The radioisotopic content for the BAPL wastes are presented in RPT-TRUW-07, *Determination of Radioisotopic Content in TRU Waste Based on Acceptable Knowledge*.

The feedstock debris to the Supercompactor is managed under INST-TRUW-8.13.1, *TRU Programs Site Project Office Process.* Section 4.3, Mixed Low-Level Waste Direct-Feed Containers, NOTE 1 states:

> *If MLLW direct feed containers have IDCs not associated with the BN510.1 waste stream and the waste has HWNs outside the BN510.1 profile, then a decontamination method will be provided by environmental and performed before BN510.1 waste can be processed.*

AK report RPT-TRUW-83, *Acceptable Knowledge summary for Supercompacted Debris Waste (BN510.1)*, presents the AK for the TRU WIPP approved BN510.1 waste stream and lists the authorized feedstock IDCs in Appendix A. Bettis debris waste BL-010 and BL-020 are not listed. The HWNs associated with BL-010 and BL-020 are a subset of the HWNs listed for BN510.1 waste stream in RPT-TRUW-83. The radionuclides associated with BL-010 and BL-020 are a subset of the radionuclides listed for BN510.1 waste stream in RPT-TRUW-07. The BL-010 and BL-020 may be included as MLLW feedstock to the supercompactor without decontamination. The Bettis debris waste may not be combined or commingled with feedstock to the BN510.1 waste stream.

If you have any questions or comments, please contact me at 557-6323.

SPC/at

cc: Jared Dominick
Kelly Galloway
Dave Haar
Caralea Hinkle-Daniel
Rachelle Hubler
Jim Jackson
Jason Lance
Randy Morris
Lyle Ryman
Eric Schweinsberg
Wes Skaar
Travis Thompson
Tim Venneman
Bruno Zovi
AMWTP Correspondence Control

DIVIDER PAGE

pads in a retrievable storage configuration. As a result, the disposal of TRU waste within the INL SDA ceased. [13, 72]

During the mid to late 1970s, the INL conducted two SDA exhumations that resulted in the generation of TRU waste and subsequent transportation to the TSA-RE. The "Pre-1980 INL-exhumed SDA wastes" that are currently in TSA-RE inventory were generated by the INL as a result of conducting ER remedial investigations from 1974 through 1978. The exhumations were two of four INL retrieval projects that were used to demonstrate the safe retrieval/packaging of radioactive waste and to support subsequent ER retrieval activities (see Sections 1.0 and 4.0). At the time of exhumation, wastes were not required to be segregated based on "defense or non-defense" determinations.[14, 15, 17, 18, 19, 20]

Pre-1980 INL-exhumed SDA waste containers were in various stages of deterioration. Containers in poor condition were bagged and, for the most part, overpacked into 83/85 gallon containers and then placed into M-III bins or cargo containers. Loose and secondary waste from pits and trenches was bagged and containerized into 55-gallon drums and/or 83/85 gallon drums and/or placed into Tri-Wall containers (i.e., heavy cardboard container) prior to overpacking fiberglass boxes, cargo containers or M-III bins. Intact, non-leaking containers were simply overpacked into M-III bins or cargo containers or may have been transferred directly to the TSA-RE. Most of the pre-1980 INL-exhumed SDA waste appeared to have originated at the RFP. [14, 15, 17, 18, 19, 20]

Due to the condition of some of the exhumed containers and management practices employed during the retrieval operations, the contents of INL exhumed repackaged waste within the TSA-RE are assumed to be a composite of the INL SDA waste contributors. The waste remained in the earth-covered configuration for more than 30 years. Recent AMWTP retrieval actions within the TSA-RE have confirmed further deterioration of the waste containers resulting in increased potential for cross contamination.

The DOE/WIPP-02-3122, Transuranic Waste Acceptance Criteria for the Waste Isolation Pilot Plant, requires generator sites to use AK to determine if the TRU waste streams to be disposed at WIPP meet the definition of TRU "defense" waste. Based on guidance from the DOE, a TRU waste is eligible for disposal at WIPP if it has been generated in whole or part by one of the atomic energy defense activities listed in section 10101(3) of 42 U.S.C. 10101, Nuclear Waste Policy Act of 1982 (NWPA).[34]

Wastes within the Pre-1980 INL-exhumed SDA preliminary waste groups are considered defense related waste. The waste within the Pre-1980 INL-exhumed SDA preliminary waste groups comprises both defense and non-defense related wastes that are inherently commingled as a result of prior disposal and/or retrieval/repackaging. The wastes within the Pre-1980 INL-exhumed SDA preliminary waste groups were generated "in part" by the atomic energy defense activities, and separation of defense waste from non-defense waste is considered to be infeasible.

Public Law 102-579, WIPP Land Withdrawal Act, prohibits the disposal of spent nuclear fuel and high-level waste as defined by the NWPA at WIPP. According to the NWPA, spent

nuclear fuel is defined as "fuel that has been withdrawn from a nuclear reactor following irradiation, the constituent elements of which have not been separated by reprocessing."[84] In addition, The DOE Radioactive Waste Management Manual expands on this definition to clarify that "Test specimens of fissionable material irradiated for research and development only, and not production of power or plutonium, may be classified as waste, and managed in accordance with the requirements of this Order when it is technically infeasible, cost prohibitive, or would increase worker exposure to separate the remaining test specimens from other contaminated material.[37]

Spent nuclear fuel may have been previously disposed of within the INL SDA pits and trenches; however, there is no AK documentation that identifies spent nuclear fuel waste as being generated and transported to the AMWTP TSA-RE as a result of the IDR or EWR Project exhumations.[14, 15, 17, 19, 20, 56] If waste is found and confirmed to be spent nuclear fuel waste during AMWTP waste management operations, a case-by-case evaluation will be conducted to determine the appropriate management activities, and the spent nuclear fuel waste will be managed separately from waste destined for WIPP.

High-level waste is defined by the NWPA as "the highly radioactive material resulting from the reprocessing of spent nuclear fuel, including liquid waste produced directly in reprocessing and any solid material derived from such liquid waste that contains fission products in sufficient concentrations, and other highly radioactive material that the Commission, consistent with existing law, determines by rule requires permanent isolation."[34]

High-level wastes may have been previously disposed of within the INL SDA pits and trenches; however, there is no AK documentation that identifies high-level waste as being part of the IDR or EWR Project exhumations or waste generation.[14, 15, 17, 19, 20, 56] If waste is found and confirmed to be high-level waste during AMWTP waste management operations, a case-by-case evaluation will be conducted to determine the appropriate management activities and the high-level waste will be managed separately from waste destined for WIPP.

3.3 Description of Operations that Generated the Waste

The wastes within the Pre-1980 INL-Exhumed SDA Preliminary Waste Groups were generated from the IDR and EWR Projects (see Section 1.2). The IDR and EWR Project conclusions provided valuable information to be used on subsequent INL CERCLA clean-up activities that involved various pits and trenches (see Section 2.0).

The IDR and EWR Projects included Pits 1, 2, 6, 9, 10, 11, and 12 as well as Trenches 1, 5, 6, 7, 8, 9, and 10.[13, 14, 15, 17, 18, 19, 20]

Pit 1 opened on November 1, 1957, and closed on October 1, 1959. Pit 2 was opened on October 1, 1959, and closed on July 1, 1963. Trench 1 was opened on July 8, 1952, and closed on October 1, 1954. Trench 5 was opened on November 4, 1955, and closed on March 29, 1956. Pit 6 was opened from May 18, 1967, to October 22, 1968. Trench 7 was opened on August 14, 1956, and closed on December 20, 1956. Trench 8 was opened on December 13, 1956, and

closed on May 7, 1957. Pit 9 was opened from November 8, 1967, to June 9, 1969. Trench 9 was opened on January 17, 1957, and closed on September 6, 1957. Pit 10 was opened from June 7, 1968, to July 8, 1971. Trench 10 was opened on July 19, 1957, and closed on February 7, 1958. Pit 11 was opened on April 14, 1970, and closed on October 16, 1970; and Pit 12 was opened on July 2, 1970, and closed on September 12, 1972.[41, 72]

1. IDR Project

The IDR project was conducted between 1974 and 1978. The IDR project was primarily focused on waste within the INL SDA Pits 11 and 12. The investigation targeted waste buried from 1968 to 1970. In addition to Pits 11 and 12, Pits 6, 9, and 10 underwent probing to evaluate waste container status within these pits; however, no waste was shipped to the TSA-RE from these pits.[14, 15]

Initially, wastes were exhumed during the IDR from the western half of the SDA Pit 11 from July 1974 through September 1976. A subsequent IDR retrieval operation was conducted on the eastern half of the SDA Pits 11 and 12 during 1977 and 1978.[14, 15]

During the IDR investigative project approximately 20,262 containers of waste were retrieved. A total of 18,029 (of the 20,262) containers retrieved from the SDA were transported to the TSA-RE.[15, 24],o

2. EWR Project

The EWR project, conducted from 1976 through 1978, was used to investigate the methods, risks, and hazards associated with the retrieval of older waste within Pits 1 and 2 and Trenches 1, 5, 7, 8, 9, and 10 (i.e., waste that was buried prior to 1964 in the SDA).[p] The EWR project targeted some of the oldest buried waste. Information acquired during the EWR Project was also used to investigate problems associated with removing 65,000 cubic meters of TRU waste.[17, 18, 19, 20]

The investigative project was initiated in Pit 2 and Trench 10 during 1976, and included a probing of Pit 1 and Trenches 1, 5, 7, and 9 during 1977. The final EWR retrieval operation occurred during 1978 within Pit 1 and Trenches 5, 7, and 9. Only a portion of the wastes in the EWR pits and trenches were exhumed.[17, 19, 20]

During the EWR investigative project, waste was retrieved from Pits 1 and 2 as well as Trenches 1, 5, 7, 8, 9, and 10.[q] A total of 820 drums were retrieved during the entire EWR project and placed in retrievable storage at the TSA-RE.[13, 17, 18, 19, 20]

---

o. The remaining waste was placed back into the SDA (2,232 drums of salt were placed on Pad A, and one drum other drum was placed into Pit 15).[13, 15]

p. No waste was generated and transported to the AMWTP during the Pit 9 investigation.

q. Waste removed from Trench 10 was all beta-gamma waste and was placed in Tri-Wall containers and transferred to Pit 15.

3.4 TRU Waste Management

In 1952, the SDA was delineated at 13 acres and was identified as a disposal location for solid radioactive waste. Burial/disposal of radioactive waste began in 1954 with TRU waste from the RFP. From 1952 to 1970, the SDA received various types of radioactive waste (including TRU waste) from multiple on-site and off-site generators for disposal.[r] The radioactive waste was buried within various INL SDA pits, trenches, and soil vault rows.[13]

Over time, TRU wastes have been defined differently by the DOE and AEC.[1, 51, 54] During the time of exhumation (i.e., 1970s) "TRU waste" was defined as having a concentration of transuranic radioisotopes equal to or greater that 10 nCi/g. In 1982, the minimum transuranic concentration threshold was raised from 10 nCi/g to100 nCi/g.[1, 51, 72]

In 1970, the AEC issued a policy requiring the segregation of waste contaminated with TRU radionuclides and required the storage of TRU waste on aboveground asphalt pads in a retrievable storage configuration. As a result of this policy, the burial of TRU waste within the INL SDA ended in 1970. [5, 51]

Wastes within the Pre-1980 INL-Exhumed SDA Preliminary Waste Groups were generated during the mid 1970s were classified as TRU wastes at the time of exhumation and were placed into retrievable storage at the TSA-RE (See Section 4.2).[8, 14, 15, 17, 18, 19, 20]

Waste within the Pre-1980 INL-exhumed SDA wastes Preliminary Waste Groups will undergo assay to determine radioisotopes and activity prior to processing and/or off-site shipment. Unless prior WIPP authorization is obtained, only waste that meets the definition of defense-related TRU waste will be shipped to WIPP.[66, 69, 70]

3.5 Waste Certification Procedures

At the time of exhumation, wastes within the Pre-1980 INL-Exhumed SDA Preliminary Waste Groups were not subjected to waste certification procedures.

Containers of waste within the Pre-1980 INL-Exhumed SDA Preliminary Waste Groups will be certified for shipment to WIPP per the requirements listed in MP-TRUW-8.5, TRU Waste Certification.[7] This procedure summarizes the method used by the AMWTP to certify waste as compliant with MP-TRUW-8.1, Certification Plan for INL Transuranic Waste, and CCP-PO-003, CCP Contact-Handled Transuranic Waste Authorized Methods for Payload Control (CCP CH-TRUPAC), for transportation, storage, and disposal of contact-handled (CH) TRU waste at the WIPP.[5, 71]

r. The SDA continues to operate as a CERCLA waste disposal location. Date range provided only pertains to historical TRU waste operations.

3.6 TRU Waste Inventory

The estimated number of TRU waste containers within each Pre-1980 INL-Exhumed SDA preliminary waste group is based on the total estimated number of containers transferred to the TSA-RE during the IDR and EWR Projects and from current estimated percent make-up of each waste form associated with retrieved containers from cargo containers operations.

The total estimated number of waste containers that were transferred to the TSA-RE for retrieval storage during the IDR and EWR Projects were approximately 18,841 containers, which included container inventory for 208 cargo containers and for 357 M-III bins.[14, 15, 17, 18, 19, 20),s]

It is assumed that 60% of the Pre-1980 INL-Exhumed SDA wastes will be classified as heterogeneous debris waste; 30% will be classified as homogeneous solids and approximately 10% will be classified as soil (See Table 1).[83]

Table 1. IDC, IDC Description, and Estimated Number of Waste Containers.

IDC	IDC Description	Estimated Number of Waste Containers (Estimated Volume) [83), 1, 2]
SD-176	Pre-1980 INL-Exhumed SDA Homogeneous Solids	11,305 (2,351 m^3)
SD-177	Pre-1980 INL-Exhumed SDA Heterogeneous Debris	5,652 (1,176 m^3)
SD-178	Pre-1980 INL-Exhumed SDA Soil	1,884(392 m^3)

1. The final waste stream estimates (and/or applicable volumes) for wastes associated with the pre-1980 INL exhumations are to be determined. The appropriate volumes will be developed and/or included within the applicable AK summary.
2. The estimated volume of each container is assumed to be 55 gallons (approximately 0.208 cubic meters/55-gallon drum).

3.7 Correlation of Waste Stream Generated

Wastes within the Pre-1980 INL-Exhumed SDA Preliminary Waste Groups (i.e., AMWTP preliminary waste streams) were generated from the INL SDA during the mid to late 1970s (see Section 1.0). INL-exhumed SDA wastes generated during these ER retrievals were transported to the TSA-RE and placed into a retrievably stored TRU waste configuration.[14, 15, 17, 18, 19, 20)]

The ER investigations were conducted to gain experience and to demonstrate the safe retrieval/packaging of historically disposed of wastes. Information and experience gained were to be used for subsequent retrieval operations (e.g., ER clean-up under the FFA/CO-CERCLA).[14, 15, 17, 18, 19, 20)]

s. A much larger volume was actually retrieved; however, not all wastes were placed in TSA-RE.

Wastes within the Pre-1980 INL-Exhumed SDA Preliminary Waste Groups were generated in support of the INL Environmental Restoration process, and as a result each preliminary waste group (see below) comprises a single waste stream.

4.0 GENERAL PRELIMINARY WASTE GROUP INFORMATION

4.1 Waste Description

The pre-1980 INL-exhumed SDA wastes are classified into three AMWTP preliminary waste groups.[t] The AMWTP has developed and will assign the "SD" as the generator's location-based item description code (IDC) prefix for wastes within the preliminary waste groups and will assign a numerical three-digit identifier to reflect the primary waste form (i.e., >50% by volume) found within each container (i.e., SD-176, SD-177, SD-178).[(33), u]

Table 2 identifies the preliminary waste group description, the applicable IDC, and associated IDC description for Pre-1980 INL-Exhumed SDA waste.

Table 2. Preliminary waste group description, IDC, and IDC description for Pre-1980 INL-exhumed SDA wastes.

Preliminary Waste Group	IDC	IDC Description
S3000/Homogeneous Solids	SD-176	Pre-1980 INL-Exhumed Homogeneous Solids
S5000/Heterogeneous Debris	SD-177	Pre-1980 INL-Exhumed SDA Heterogeneous Debris
S4000/Soil	SD-178	Pre-1980 INL-Exhumed SDA Soil

SD-176: Pre-1980 INL-Exhumed SDA Homogeneous Solids. This includes homogeneous solids exhumed, generated and/or repackaged during the INL SDA Early Waste Retrieval (EWR) Project and the Initial Drum Retrieval (IDR) Project. The waste includes all loose homogenous solid waste found in boxes, bins, and cargos. Waste may also contain <50% by volume debris or soil.[(33)]

SD-177: Pre-1980 INL-Exhumed SDA Heterogeneous Debris. Waste includes intact containers of >50% by volume miscellaneous heterogeneous debris generated as a result of INL SDA exhumations. This includes debris exhumed, generated and/or repackaged during the EWR Project and the Initial Drum Retrieval (IDR) Project. The waste includes all loose debris waste found in boxes, bins, and cargos. Waste may also contain <50% homogeneous solids or soil.[(33)]

---

t Additional waste-specific information for each waste group is included within the applicable waste group sections (i.e., 5.0, 6.0 and 7.0).

u An AMWTP assigned additional SDA IDC (i.e., IW-179) to M-III bins that were used as overpacks and transport containers for the INL-exhumed SDA investigation wastes: SD-176, SD-177 and SD-178.

SD-178: Pre-1980 INL-Exhumed SDA Soil. This waste includes soils exhumed, generated and/or repackaged during the EWR Project and the Initial Drum Retrieval (IDR) Project. The exhumed waste includes all loose soil waste found in boxes, bins and cargos. Waste may also contain <50% by volume debris or homogeneous solids.[33]

The INL SDA exhumation occurred during a time frame when the only waste segregation practice was a general prohibition on the disposal/burial of TRU wastes. INL waste segregation practices based on waste form/type were not required for overall waste management. [14, 15, 17, 18, 19, 20, 80] As a result, all three waste forms (i.e., homogeneous solids, heterogeneous debris, and soil) may be found in waste containers.

4.2 Waste Generation

4.2.1 IDR Waste Generation

Two documents were published that summarized IDR waste generation activities.[14, 15] The IDR program was initiated in 1974 and continued until 1978. The IDR program exhumed INL SDA-waste from Pits 11 and 12 and included a probing of Pits 6, 9, and 10; however, the probing did not result in retrieval of drums.[14]

The initial effort began exhumations within the Pit 11. During this initial retrieval effort 2,235 eighty three gallon containers were transferred to the TSA-1 and 2. In addition 308 RFP salt waste containers were transferred to the transuranic disposal area (TDA), 546 containers were packaged into M-III bins, 10 damaged drums were bagged in plastic and placed into two fiberglass reinforced plywood boxes, 1,332 containers were packaged into cargo containers and 108 drums were stacked in the RWMC air support building. [14],v

Exhumation began with the soil overburden being removed by a bulldozer or front end loader to within 45 cm (18 in.) of the buried waste. The remaining soil overburden to the drums was then removed with a backhoe and/or a Drott excavator. A boom truck and/or the Drott excavator was used for drum retrieval. Retrieved 55-gallon drums or smaller were triple bagged in plastic and placed into the 83/85-gallon drum. Approximately 50 lb of absorbent was added between the second and third bag, and the container was tagged with a blue plastic TID or small stainless steel tag with weight and pit grid location.[14]

The final phase of the IDR project began during 1977 and continued into 1978 within Pits 11 and 12. During this second phase, 12,101 containers were transferred to cargo containers; 1,805 containers were transferred to M-III bins; 1,924 salt drums were disposed into the TDA; and one drum was disposed into Pit 15.[15]

---

v. Very few drums (less than 2%) were breached or were without lids. About one-half of these drums (less than 1%) had some liquids leaking from them. Drums that contained salts (745-XXXX drums) with TRU activity levels less than 10 nCi/g were taken directly to the TDA (and not overpacked into 83-gallon containers).[14]

Similar to the first phase, exhumation began with the soil overburden being removed by a bulldozer or front end loader to within 45 cm (18 in.) of the buried waste. The remaining soil overburden to the drums was then removed with a Drott excavator. A boom truck and/or the Drott excavator was used for drum retrieval. If the retrieved drums ware breached or had external contamination, the drums were wrapped in plastic and placed in M-III bins (DOT 7A metal box). Drums leaking free liquid were placed over a drip pan containing absorbent materials. After all the liquid had been drained from the drum, the drum was wrapped in plastic and placed in an M-III bin or cargo container.[15], w

4.2.2 EWR Waste Generation

Four documents were published that summarized EWR waste generation activities. [17, 18, 19, 20] EWR retrievals began in 1976 and ended in 1978. The retrievals included Pits 1 and 2 and Trenches 1, 5, 7, 8, 9 and 10.[13, 17, 18, 19, 20]

Approximately 170.6 m^3 of waste (820 fifty-five gallon drum equivalents) was generated during the EWR Project. The volume included 94.5 m^3 of retrieved waste (457 fifty-five gallon drums), 34.4 m^3 of loose waste (165 fifty-five gallon drum equivalents), and 24.3 m^3 of contaminated soil (116 fifty-five gallon drum equivalents). Approximately 17.2 m^3 of self-generated waste (82 fifty-five gallon drum equivalents) were generated during the EWR Project.[17]

Retrieval was initiated in Pit 2 and Trench 10.[x] Pit 2 was chosen for the first phase of retrieval based on the fact that Pit 2 was previously flooded and was expected to reflect the worst possible conditions that could be encountered at the RWMC for retrieval purposes.[19]

During the Pit 2 excavation, much of the waste recovered was beta-gamma waste with less than detectable amounts of alpha contamination found. At one point, a deposit of glass vials three to four inches long and each containing a small amount of liquid (~10 cc) was discovered. The vials showed a high beta-gamma radiation field of 6-7 R/hr. In addition, approximately one m^3 of soil (4 or 5 fifty-five gallon drum equivalents) was contaminated with 200 mR/hr beta-gamma contamination. No attempt was made to open the vials in order to consolidate or absorb the liquid because of the high radiation field encountered. However, they were placed inside a plastic bag and surrounded with contaminated soil inside of a Tri-Wall container which was then put in an M-III bin. Approximately 200 lb of Drierite® absorbent was placed in the bin outside of the Tri-Wall container to absorb any liquid that might later escape from the plastic bag.[24]

Initially the soil overburden was removed by a bulldozer or front end loader to within 45 cm (18 in.) of the buried waste along the edge of Pit 2. Final soil removal around the waste containers was accomplished by a hand shovel and manual labor. Once a working face was

---

w. Approximate 2.4% of the drums were breached. About one-third of these drums leaked free liquid.[15]

x. Approximately 27 fifty-five gallon drums (5.66 m3) of beta-gamma waste were retrieved from Trench 10 and transferred to Pit 15.[19]

established, the earth that had been removed (if the contamination was found to be below background) was placed back into the pit. Soil showing alpha counts above background was placed in Tri-Wall containers and soil samples were taken for wet chemical analysis for plutonium content.[y] Approximately 63 fifty-five-gallon drum equivalents (13 m^3) of contaminated soil was packaged and placed on TSA-R with the retrieved waste.[19]

When the overburden of earth was removed the waste (both loose and contained) was carefully removed from the pit. Small loose waste materials in the pit were removed by hand and/or shovel and placed in a large plastic bag and then taped shut.[z]

As each Tri-Wall container of waste was filled or each drum was retrieved, it was monitored by Health Physics to detect any large quantities of plutonium to determine if decontamination activities were required. Only one M-III bin required decontamination during this phase.[19]

Drums that had good integrity were encased in polyethylene bags and placed directly in the M-III bins (without Tri-Walls).[aa] All other drums (e.g., loose waste, drums of questionable integrity and contaminated soil), were loaded into Tri-Wall cardboard containers that were lined with polyethylene bag liners.[19], [bb]

On July 26, 1976, 14 drums were removed from Pit 2. The first 12 drums were removed without incident. As each was removed, the drum was bagged in a 4-mil polyethylene bag. As the thirteenth drum was removed, liquid escaped. The leaking drum resulted in contamination of the operating area in excess of 180 microcuries per gram (μCi/g) of soil. The drum was bagged and placed into an 83/85-gallon overpack container. The contaminated area was sprayed with asphalt, and the soil was shoveled into plastic bags, sealed, and transferred to a Tri-Wall container. The Tri-Wall container was then placed into an M-III bin. As retrieval continued, the fourteenth drum was removed from a horizontal position and was placed in an upright position. After being placed in the upright position, the drum leaked several (4 to 8) liters of liquid. The liquid was contaminated with transuranic isotopes (principally ^{238}Pu, ^{239}Pu, and ^{241}Am). An immediate survey of the area showed levels of 60 mR/hr. The drum was bagged and placed into an 83/85-gallon overpack container, and the contaminated area was sprayed with asphalt. The next day, five bubble suits (and other PPE) showed contamination, and an additional estimated 4 to 8 liters of liquid escaped during the night. The drum underwent a total of eight bagging operations and had absorbent placed in two of the eight polyethylene bags to absorb liquids. Absorbent was placed into the bottom of an 83/85-gallon drum and the leaking, bagged drum was overpacked into the 83/85-gallon container. During this time, it was discovered that by

---

y. Detailed chemical analysis results for Pu concentration varied from 0.08 nCi/g - 14 nCi/g. [19]

z. Airborne contamination was controlled by using a fine spray of water over the working face of the pit to prevent dust. Detergent was added to the water as a wetting agent to aid in soil penetration.[19]

aa. Virtually all of the drums were severely rusted, and five were either damaged or were missing the cover, but contained no liquids. Ten were deteriorated and leaked liquids when removed from the pit.[19]

bb. The Tri Wall containers also had ¼ inch manila ropes tied vertically around the container for future waste management.[19]

spraying water onto the contaminated soil, the spread of contamination decreased (soil could be removed without disturbing the radionuclides). Soil, PPE, and other debris from the clean-up efforts were generated over the next several days and were bagged, placed in Tri-Wall containers, and transferred to M-III bins. The contaminated soil and self-generated waste volume was 21.4% of the retrieved waste volume. [18, 20], cc

Subsequent retrievals continued within Pit 2 and Trench 10, but also included retrievals from Trench 8 and probe explorations of Pit 1 and Trenches 1, 5, 7, and 9.[20]

Approximately 70% of the drums retrieved from Pit 2 and Trench 10 and all of the drums retrieved from Trench 8 were severely breached. These drums had many holes through the surface of the drums; metal surfaces were badly rusted and could be torn by hand.[20]

The waste from this retrieval was generated in the same manner as prior EWR retrievals and included but was not limited to PPE, HEPA filters, filter racks, a lab hood, a large plywood workbench, and pieces of wooden boxes.

All retrieved drums removed from the area were wrapped in plastic and taped shut. All loose waste/soil was placed in plastic bags that were taped shut. Some of the contaminated soil adhered to retrieved drums and loose waste. The soil was repackaged with the waste. No attempt was made to segregate this soil from the waste or to determine the volume of this soil.[20]

In addition to the soil that adhered to the retrieved waste, approximately 16 fifty-five gallon drum equivalents (3.3 m^3) of contaminated soil were generated. This soil became contaminated from being in contact with contaminated waste in the pit or trenches, or from the spread of contamination during retrieval operations. Retrieved containers were loaded into M-III bins, and repackaged loose waste and contaminated soil were loaded into Tri-Wall containers.[20]

Approximately 9% of the retrieved drums leaked liquids, but only two of these drums leaked liquids containing alpha contamination. The alpha-contamination levels were 100,000 and 200,000 cpm. Only one drum leaked liquid containing beta/gamma contamination (20,000 cpm). About 5% of the retrieved drums were externally alpha contaminated, and this contamination was generally fixed to the drum's surface. The alpha contamination levels ranged from 2,000 cpm to greater than 2×10^6 cpm. The highest radiation level detected on the surface of a drum was 45 mR/h. The radiation levels at contact with most of the retrieved drums were negligible.[20]

Final EWR operations took place during 1978 and included retrieval activities within Pit 1 and Trenches 5, 7, and 9.[17]

As with prior operations, the soil overburden was originally removed by a bulldozer or front end loader to within 45 cm (18 in.) of the buried waste along the edge of Pit 1. Final soil removal around the waste containers was accomplished by a hand shovel and manual labor. All

---

cc. During FY76 and the transition quarter, the contaminated soil volume was 45% of the retrieved waste volume. Soil binding tests that used Turco® and Petroset® products were also tested during the retrieval.[20, 26]

retrieved drums removed from the area were wrapped in plastic and taped shut. Breached 55-gallon drums were overpacked into 83/85-gallon containers. All loose waste and self generated waste was wrapped in plastic, taped shut, and placed into 55-gallon drums and subsequently compacted. Most of the waste was placed into new containers. Because of the large amount of compactable waste generated during EWR operations, a compactor was used to compact waste into 55-gallon or 83/85-gallon containers. The compactor could deliver a compression force up to 8,165 kg and provided an approximate 10:1 reduction in waste volume. In addition, waste sizing operations were also available. A three-function hydraulic cutter was used that included a 10 cm cable cutter, a guy strand cutter, and a 25 cm pole saw. The cable cutter was used to cut electrical cable and conduit. The pole saw was adapted to accommodate a grinding wheel and was used to resize piping up to 20 cm in diameter and to cut ventilation ducting or parts of laboratory hoods.[17]

Contaminated soil was also wrapped in plastic and placed into 55-gallon drums. Loose waste, which included metal cylinders and glass vials, was found to be contaminated with beta-gamma. An analysis of the contamination, including the liquid in the vials indicated ^{90}Sr and ^{137}Cs to levels of 200 mR/h.[17]

Approximately 65% of the drums retrieved during 1978 were breached, and about 3% of the drums retrieved leaked free liquids with alpha contamination levels ranging from 2,000 to 80,000 cpm. Many of the drums had fixed alpha-contamination on their external surfaces that ranged from 2,000 to greater than 2×10^6 cpm. One drum had radiation levels to 300 mR/h contact.[17]

The amount of contaminated soil generated during 1978 was approximately 23 fifty-five gallon drum equivalents (4.9 m^3) or 15% of the retrieved waste volume. Retrieved containers were subsequently loaded into M-III bins, and repackaged loose waste and contaminated soil were subsequently loaded into Tri-Wall containers.[17] The contaminated soil and self-generated waste volume was 21.4% of the retrieved waste volume.[20]

All waste retrieved from the EWR operation was placed in asphalt-lined M-III bins that were also lined with a polyethylene bag. Approximately 100 lb of absorbent were spread within each M-III bin to absorb liquids that may leak from containers. Nylon slings were used to load waste containers into the M-III bins.[19, 20]

4.2.3 Areas and/or Buildings From Which the Waste was Generated

The pre-1980 INL-exhumed SDA wastes were generated at the SDA as a result of the IDR and EWR Projects associated with Pits 1, 2, 11, and 12; and from Trenches 1, 5, 7, 8, 9, and 10.

4.2.4 General Process Flow

The general process flow for pre-1980 INL-exhumed SDA wastes began with the exhumation of waste from the INL SDA. Loose waste and contaminated soil were bagged and placed into 55-gallon drums or Tri-Wall containers prior to placement into M-III bins or cargo

containers. Retrieved waste containers were bagged and may have been overpacked into 83/85-gallon containers. Tri-Wall containers and 55- and 83/85-gallon containers were placed into M-III bins or cargo containers (See Figure 1).[14, 15, 17, 18, 19, 20]

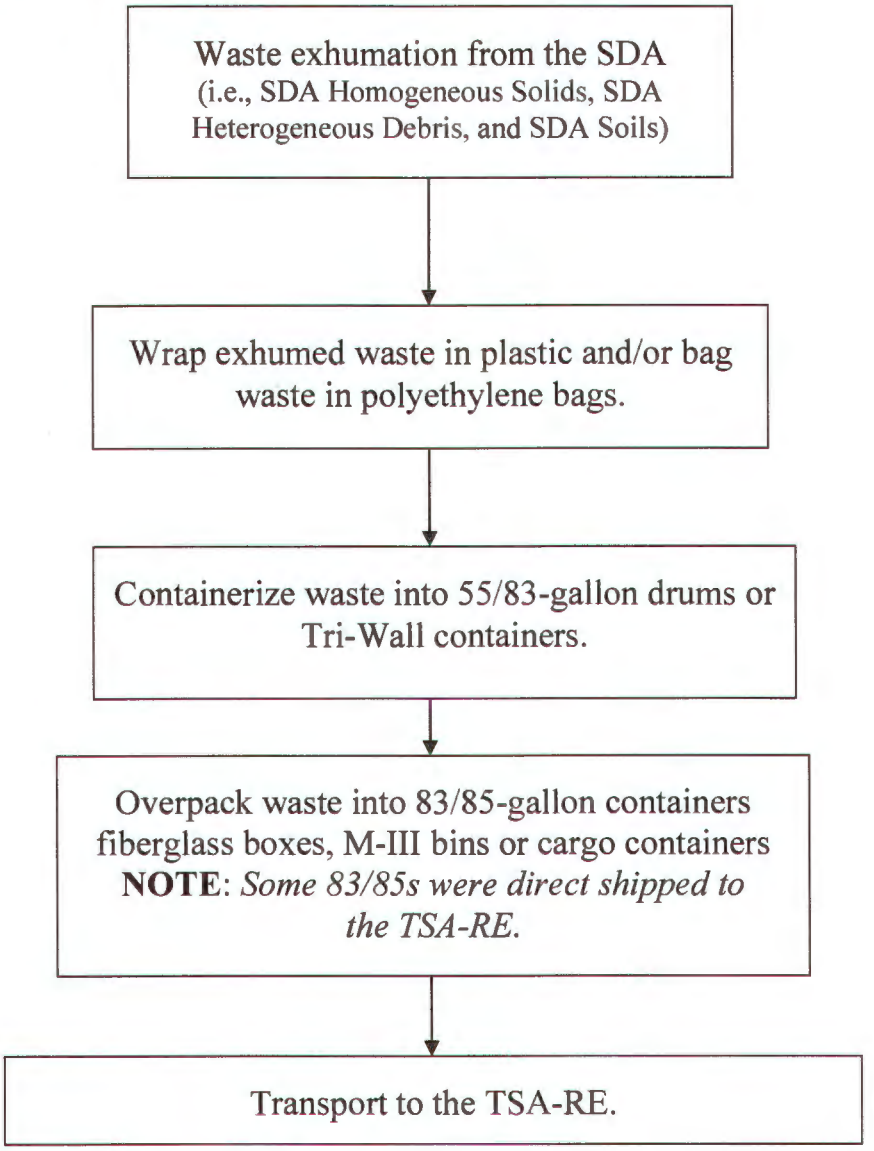

Figure 3. General process flow chart for INL-exhumed SDA wastes.

4.2.5 Material/chemical inputs

1. Wastes within the pre-1980 INL-exhumed SDA Homogeneous Solids Preliminary Waste Group will contain ≥50% homogeneous solids.[33] Material inputs for wastes within the Homogeneous Solids Preliminary Waste Group include inorganic and organic solidified liquids/sludge and/or absorbed aqueous and organic liquids. [14, 15, 17, 18, 19, 20, 33, 39]

The waste may also contain minor amounts (e.g., <50% by volume) of heterogeneous debris and/or soil/gravel/sand.[14, 15, 17, 18, 19, 20, 33, 39]

2. Wastes within the Pre-1980 INL-exhumed SDA Heterogeneous Debris Preliminary Waste Group will contain ≥50% by volume heterogeneous debris.[33] Material inputs for wastes within the Heterogeneous Debris Preliminary Waste Group will be primarily composed of, but are not limited to heterogeneous debris such as: lumber, wallboard, concrete blocks, steel plates, ducting, electrical wires, fuse boxes, roofing material. floor tile, insulation, lead sheet, bricks, asphalt paving material, steel stairways, ladders, hoods, laboratory benches, desks, chairs, cabinets, glassware, plastic tubing, plastic and glass bottles, tanks, heat exchangers, graphite, tube bundles, condensers, pumps, piping, flanges, valves, high-efficiency particulate air filters, lathes, drill presses, clothing, rubber gloves, masks, hard hats, rubber and plastic aprons, boots, hand tools, metal-working machines, cranes, hoists, welders, metal filings, abrasive wheels, sheet metal, paper, rags, plastic bags and sheeting, brooms, and steel wool. Large items may have been sized prior to containerization. [14, 15, 17, 18, 19, 20, 33, 39, 72]

   The waste may also contain minor amounts (e.g., <50% by volume) of homogeneous solids and/or soil/gravel/sand.[14, 15, 17, 18, 19, 20, 33, 39, 72]

3. Wastes within the Pre-1980 INL-Exhumed SDA Soils Preliminary Waste Group will contain ≥50% by volume soil/gravel and/or sand. [33] Material inputs for wastes within the Soil Preliminary Waste Group will be primarily composed of soil/gravel/sand, asphalt and/or soil binders associated with Petroset® and/or Turco® products.[14, 15, 17, 33, 39]

Waste within the pre-1980 INL-exhumed SDA preliminary waste groups may contain prohibited liquids. If found, prohibited liquids will be treated with various absorbents and/or stabilization agents (e.g., Aquaset®, Aquaset II-G®, Petroset II®, Petroset II-G® or Micro-Cel® E, Portland cement®, Drierite®, SP-400®, Absorbent PIGs®, vermiculite, Oil Dri®, or diatomaceous earth). [24, 26, 27, 28, 29, 30, 31, 33, 39, 82]Waste within the pre-1980 INL-exhumed SDA preliminary waste groups may also contain prohibited liquids that were treated (or will be treated) with various absorbents and/or stabilization agents (e.g., Aquaset®, Aquaset II-G®, Petroset II®, Petroset II-G® or Micro-Cel® E, Portland cement®, Drierite®, SP-400®, Absorbent PIGs®, vermiculite, Oil Dri®, or diatomaceous earth). [24, 26, 27, 28, 29, 30, 31, 33, 39, 82]

The final AMWTP-assigned IDCs for containers of pre-1980 INL-exhumed SDA wastes will be based on the use of real-time radiography (RTR) or visual examination (VE) and the primary waste form found within the container (i.e., whichever waste form that is ≥50% by volume).[33, 63, 64, 65, 67, 68]

4.2.6 Waste Volume

The final waste stream estimates (and/or applicable volumes) for wastes associated with the pre-1980 INL exhumations will be developed and/or included within the applicable AK summary.

4.3 Waste Packaging

Wastes within the pre-1980 INL-exhumed SDA preliminary waste groups may undergo repackaging by AMWTP prior to treatment and/or off-site shipment. Wastes that undergo repackaging activities by AMWTP will be repackaged using AMWTP procedure INST-OI-24, Waste Packaging.[55]

4.3.1 IDR Packaging

Originally, 83/85-gallon drums were used as the primary overpack container. Retrieved 55-gallon drums (or smaller) were triple-bagged in plastic, taped, and placed into an 83/85-gallon drum with absorbent material. Approximately 50 lb of absorbent material was placed between the second and third bags. The 83/85-gallon drum was tagged with a small tag containing its identification number, weight, and pit grid location.

Initially, all INL-exhumed 55-gallon drums were triple-bagged in plastic and placed inside of 83/85-gallon containers and transported directly to the TSA-RE. In December of 1975, 85-gallon drums were used as overpacks and were placed into M-III bins for transport to the TSA. In February 1976, the cargo container (which can hold up to 72 drums) came into use. The cargo containers were used as overpacks for containers (e.g., 85-gallon drums placed inside of a cargo container). During this same time the M-III bins continued to be used for contaminated or breached containers.[14, 15] Drums with liquid were placed over a drip pan containing absorbent materials. After all liquid was drained, the drum was wrapped in plastic, taped shut, and then placed in an M-III bin.[14, 15]

M-III bins were coated with an asphalt liner and were lined with a large polyethylene bag. Approximately 45 to 100 lb of absorbent was spread on the floor of the M-III bin to absorb any leaking liquid. Nylon slings were used to load up to eight 55-gal (208-L) drums into the M-III bins.[19, 20]

Cargo container floors and the area extending 12 inches up the sidewalls were waterproofed with a sealant material called Peda-Guard II, and approximately 50 lb of absorbent material was spread on the floor of each cargo container to absorb any liquids that may have leaked from the drums after overpacking.[14, 15] During the IDR retrieval operations, ten badly damaged drums were found during the initial operations. These drums were bagged, taped, and placed (i.e., overpacked) into two fiberglass-reinforced plywood boxes.[14] dd

EWR: Drums that had good integrity were encased in polyethylene bags and placed directly in the M-III bins (without Tri-Walls).[19] 28 All other drums (e.g., loose waste, drums of questionable integrity and contaminated soil), were loaded into Tri-Wall cardboard containers that were lined with polyethylene bag liners.[29] All waste retrieved from the EWR operation was placed in asphalt-lined M-III bins that were also lined with a polyethylene bag. Approximately

dd. Fiberglass boxes can hold up to six to ten 55-gallon drums.

100 lb of absorbent were spread within each M-III bin to absorb liquids that may leak from containers. Nylon slings were used to load waste containers into the M-III bins.[19, 20]

4.3.2 EWR Packaging

All loose waste and soil was removed either by hand or shovel and placed into large plastic bags and taped shut. Bagged soil and bagged loose waste were transferred to either a polyethylene-lined Tri-Wall container (i.e., heavy-walled semi-octagonal container made from cardboard) or placed in a 55-gallon drum prior to placement into M-III bins. [18, 19, 20] [ee] Breached drums or drums with questionable integrity and some drums containing contaminated soil were bagged and taped shut prior to being overpacked into 83/85-gallon containers before being placed into the M-III bins.[17, 19, 20]Retrieved drums that did not require overpacking into 83/85-gallon drums were placed into plastic bags, sealed and taped prior to depositing them directly into M-III bins.[17, 18, 19] One Tri-Wall container contains several glass vials (three to four inches long) with approximately 10 cc of liquid (each). The vials exhibited high beta-gamma radiation. The vials were placed inside of a plastic bag and were surrounded with one m^3 (4-5 fifty-five gallon drum equivalents) of contaminated soil. The Tri-Wall container was then put in an M-III bin. Approximately 200 lb of absorbent was placed in the M-III bin to absorb any liquid that might later escape from the plastic bag.[19]Beginning in 1978, loose and self-generated waste was placed into 55-gallon drums and mechanically compacted (approximately 10:1). Large waste items underwent size reduction prior to containerization.[17, 19, 20]

4.4 Waste Characterization

4.4.1 EPA Hazardous Waste Numbers

The wastes within the Pre-1980 INL-Exhumed SDA Preliminary Waste Groups have been managed as mixed waste since the late 1980s.[49]

The Pre-1980 INL-Exhumed SDA wastes were generated as part of early INL ER investigative retrievals (i.e., IDR and EWR). The Pre-1980 INL-Exhumed SDA wastes were retrieved, packaged, and transported to the TSA-RE during the mid to late 1970s. At the time of generation, wastes within the Pre-1980 INL-Exhumed SDA Preliminary Waste Groups (i.e., Homogeneous Solids, Heterogeneous Debris, and Soil) were not subject to RCRA requirements and were not assigned EPA HWNs.

During 1986 (and again in 1988), the EPA published a "Notice of Intent" within the Federal Register that provided notification to hazardous waste generators of their intent to regulate the hazardous portion of mixed waste (i.e., waste that is both radioactive and hazardous) and included information relating to EPA's authority of mixed waste.[ff]

---

ee. The Tri-Wall containers were then placed into M-III bins. Two Tri-Wall containers will fit into M-III bins.

ff. See 51 FR 24504 and 53 FR 37045.

As a result of these notices, the DOE, Nuclear Regulatory Commission (NRC), and EPA entered into discussions to address topics such as EPA's extent of authority, regulatory guidance, and clarification. These discussions also resulted in the development of applicable definitions.[32, 59), gg]

The HWNs and constituents for all three preliminary waste groups are the same. They were based on the results of extensive review and evaluation of applicable AK. The evaluation and review included the following:

a. Preliminary INL SDA CERCLA-assigned HWNs/constituent documents,[4, 39, 41, 44, 45, 46, 47, 48, 49, 72)]

b. The current HWNs associated with the INL SDA CERCLA activities being conducted under the ARP.[39), hh]

The HWN and constituent assignment for wastes within the Pre-1980 INL-Exhumed SDA Preliminary Waste Groups also takes into consideration:

a. The time frame of retrieval (i.e., prior to 1980/RCRA regulation), [14, 15, 17, 18, 19, 20)]

b. Condition of containers, [14, 15, 17, 18, 19, 20)]

c. The potential for cross contamination, [14, 15, 17, 18, 19, 20)]

d. The lack of waste segregation practices employed at the time of retrieval and/or current controls for on-going retrievals,[13, 14, 15, 17, 18, 19, 20, 51)] and;

e. HWNs/constituents that are specific to the ARP [39)]

f. Overall physical form of the waste (e.g., F003 no longer applicable if the waste is non-liquid).

See Sections 5.0, 6.0 and 7.0 for additional information on waste characterization associated with each waste group.

---

gg. In 1987, DOE outlined their position on radioactive by-product material and documented (i.e., acknowledged) EPA's RCRA regulatory authority over the non-radioactive portion of mixed waste and further discussions continued through to the mid 1990s.[32, 59)]

hh. The INL SDA CERCLA action being conducted under ARP and applicable HWNs/constituents are included in Table 4 due to the similarities in INL SDA waste contributors (i.e., legacy generator inputs) and potential cross contamination issues.[39)]

Table 3. HWNs and associated hazardous constituents associated with the Pre-1980 INL-Exhumed SDA Preliminary Waste Groups (i.e., Homogeneous Solids, Heterogeneous Debris and Soil).

HWNs [4, 39, 41, 43, 44, 45, 46, 47, 48],[a, b]	**Constituents (or generating process)** [1, 39, 41, 43, 44, 45, 46, 47, 48, 56, 62], [c]
D004	Arsenic
D005	Barium
D006	Cadmium
D007	Chromium
D008	Lead
D009	Mercury
D010	Selenium
D011	Silver
D022	Chloroform
D027	1,4-Dichlorobenzene
D028	1,2-Dichloroethane
D029	1,1-Dichloroethylene
D030	2,4-Dinitrotoluene
D032	Hexachlorobenzene
D033	Hexachlorobutadiene
D034	Hexachloroethane
D037	Pentachlorophenol
D043	Vinyl chloride
F001, F002	Carbon tetrachloride
F001, F002	Methylene chloride
F001, F002	Tetrachloroethylene
F001, F002	1,1,1-Trichloroethane
F001, F002	Trichloroethylene
F001, F002	Trichlorofluoromethane
F001, F002	1,1,2-Trichloro-1,2,2-trifluorethane
F002	Chlorobenzene
F002	1,2-Dichlorobenzene (o-Dichlorobenzene)
F002	1,1,2-Trichloroethane
F003	Acetone
F003	Butanol
F003	Ethanol
F003	Ethyl acetate
F003	Ethyl benzene
F003	Ethyl ether
F003	Methanol
F003	Methyl isobutyl ketone

Table 3. (Continued).

HWNs [4, 39, 41, 43, 44, 45, 46, 47, 48],a, b	Constituents (or generating process) [1, 39, 41, 43, 44, 45, 46, 47, 48, 56, 62], c
F003	Xylene
F004	Cresols
F004	Nitrobenzene
F005	Benzene
F005	Carbon disulfide
F005	Isobutanol
F005	2-Ethoxyethanol
F005	Methyl ethyl ketone
F005	2-Nitropropane
F005	Pyridine [a]
F005	Toluene
F006	Wastewater treatment sludges from electroplating operations
F007	Spent cyanide plating bath solutions from electroplating operations
F009	Spent stripping and cleaning bath solutions from electroplating operations

a. Where possible the RCRA listed waste HWN superseded the RCRA characteristic HWN for specific constituents [e.g., D038 (pyridine) characteristic HWN is superseded by the F005 listed HWN].

b. P-listed HWNs for unused cyanide waste previously disposed into the SDA Pit 9 is only associated with INL ARP actions. There is no supporting AK documentation that indicates unused cyanide wastes being generated and/or transported to the TSA-RE as a result of IDR or EWR retrieval investigations.[14, 15, 17, 18, 19, 20, 81]

c. A complete list of hazardous (and non-hazardous) constituents that may be found in the Pre-1980 INL-Exhumed SDA wastes is identified in Table A-1.

4.4.2 Radionuclides

Pre-1980 INL-exhumed SDA wastes within the three preliminary waste groups are assigned the same radionuclides and activity. The relative radioisotope activity and predominant radionuclides are expected to be similar to those radionuclides identified from similar SDA exhumation activities currently being conducted at the SDA under the ARP.[39]

The similarity of expected radionuclides and relative radioisotope activity are a result of: the generation process (exhumation of wastes from the SDA pits and trenches); the condition of containers at the time of exhumation; and repackaging operations. Radionuclides present on a container-by-container basis within the waste groups may be significantly variable. Expected radionuclides and predominant radioisotopes are identified within RPT-TRUW-07.[39, 41, 56, 58, 62]

Because wastes retrieved from the SDA and stored at AMWTP originated primarily from Rocky Flats, 95% of the activity is expected to be from ^{241}Am, ^{239}Pu, ^{240}Pu, and ^{241}Pu. Other radionuclides originated from various INL generators. The two most prevalent radioisotopes expected to be present in the preliminary waste groups are ^{241}Pu and ^{241}Am (See Table 4). [39]

Waste within the Pre-1980 INL-Exhumed SDA Preliminary Waste Groups will undergo assay to determine radioisotopes and activity prior to processing and/or off-site shipment.[66, 69, 70]

Table 4. Relative activity of radionuclides expected in the preliminary waste groups.[39]

Radionuclide	Average Activity Percent
^{241}Pu	49.49%
^{241}Am [1]	39.59%
^{239}Pu [1]	8.63%
^{240}Pu [1]	1.94%
^{238}Pu [1]	0.26%
^{90}Sr [1]	0.03%
^{238}U [1]	0.03%
^{137}Cs [1]	0.02%
^{242}Pu [1]	<0.01%
^{233}U [1]	<0.01%
^{234}U [1]	<0.01%

1. WIPP-Tracked Radionuclide

4.4.3 Polychlorinated Biphenyls

Wastes within the pre-1980 INL-exhumed SDA preliminary waste groups (i.e., Homogeneous Solids, Heterogeneous Debris, and Soil) may contain polychlorinated biphenyls (PCBs). See the applicable preliminary waste group section for PCB classifications (i.e., 5.5.1.8, 6.5.1.8, and 7.5.3.1).

4.5 Prohibited Items/Waste

Individual containers of wastes within the pre-1980 INL-exhumed SDA preliminary waste groups (i.e., Homogeneous Solids, Heterogeneous Debris, and Soil) may contain prohibited items or wastes.[14, 15, 17, 19, 20] Wastes within the pre-1980 INL-exhumed SDA preliminary waste groups were retrieved, packaged, and transported to the TSA-RE during the mid to late 1970s, before the identification of WIPP prohibited items and before WIPP requirements for segregation or treatment of prohibited items.[14, 15, 17, 19, 20] In addition, containers of waste that were retrieved from the SDA may contain WIPP-prohibited items as a result of practices employed before disposal.[80]

Prohibited waste/items that may be found in pre-1980 INL-exhumed SDA waste containers may be variable. The types of prohibited items that may be encountered include, but are not limited to, aerosol cans/pressurized containers, liquids, sealed containers greater than 4 liters, reactive waste, ignitable waste, or corrosive waste. (See additional information within Sections 5.5.1.1, 5.5.1.2, 5.5.1.3, 6.5.1.1, 6.5.1.2, 6.5.1.3, 7.5.1.1, 7.5.1.2 and 7.5.1.3.)[14, 15, 17, 19, 20] WIPP-prohibited items found within containers will need to be removed and/or will undergo treatment to remove the prohibited condition before shipment to WIPP.

The following items are currently WIPP-prohibited in accordance with MP-TRUW-8.1, Certification Plan for INL Transuranic Waste, and MP-TRUW-8.2, Quality Assurance Project Plan.[5, 6]

- Liquid waste and prohibited observable liquids
- Sealed containers greater than 4 liters
- Non-radionuclide pyrophoric materials
- Hazardous wastes not occurring as co-contaminants with TRU mixed wastes
- Wastes incompatible with backfill, seal and panel closure materials, container and packaging materials, shipping container materials, or other wastes
- Wastes containing explosives or compressed gases
- Wastes with PCBs not authorized under an Environmental Protection Agency (EPA) PCB waste disposal authorization
- Wastes exhibiting the characteristic of ignitability, corrosivity, or reactivity (Hazardous Waste Numbers [HWNs] D001, D002, or D003)
- Waste that has ever been managed as high-level waste and waste from tanks specified in Table C-8 of MP-TRUW-8.2, unless specifically approved though a Class 3 permit modification.

5.0 HOMOGENEOUS SOLIDS PRELIMINARY WASTE GROUP INFORMATION

5.1 Waste Description

See Section 4.1.

5.2 Waste Generation

See Section 4.2.

5.3 Waste Volume

See Section 4.2.6.

5.4 Waste Packaging

See Section 4.3.

5.5 Waste Characterization

Wastes within the pre-1980 INL-exhumed SDA Homogeneous Solids Preliminary Waste Group are classified as mixed waste (i.e., hazardous and radioactive) and are assigned the IDC SD-176. The waste has been managed as mixed waste since the late 1980s (See Section 4.4).

5.5.1 EPA Hazardous Waste Numbers

The HWNs applicable to wastes within the Pre-1980 INL-Exhumed SDA Homogenous Solids Preliminary Waste Group are identified in Table 3.

5.5.1.1 Ignitability

Wastes within the Pre-1980 INL-Exhumed SDA Homogenous Solids Preliminary Waste Group were retrieved, packaged, and transported to the TSA-RE during the mid to late 1970s prior to the identification of WIPP prohibited items (e.g., ignitable waste).

Wastes within the Pre-1980 INL-Exhumed SDA Homogenous Solids Preliminary Waste Group are not expected to meet the 40 CFR 261.21 definition of ignitability. However individual waste containers may contain ignitable wastes. The ignitable status for individual containers is on a case-by-case basis.

Containers that are identified as having prohibited liquids will be treated at the AMWTP using one or more of the following: Aquaset®, Aquaset II-G®, Petroset II®, Petroset II-G®, SP-400®, or Micro-Cel® E absorbents or other approved absorbents to ensure that any liquids associated with the waste are remediated and the waste is not ignitable due to prohibited liquids. (26, 27, 28, 30, 31, 82)

The waste is not compressed gas; however, containers of compressed gases have been documented as being disposed of within the INL SDA.(41) It is unknown if the Pre-1980 INL-exhumed SDA investigation waste contains compressed gases.(14, 15, 17, 19, 20) If compressed gases are found during RTR or VE they will be removed and/or undergo treatment.

Wastes within the Pre-1980 INL-Exhumed SDA Homogenous Solids Preliminary Waste Group are not expected to meet the U.S. Department of Transportation (DOT) definition of an *oxidizer* as defined in 49 CFR 173. RFP salt wastes, which are oxidizers, were documented as being transported to the RWMC TSA-Pad A;[ii] however, there may be some salt waste within the TSA-RE that was retrieved from the SDA.(15) No other potential oxidizer has been identified within retrieval documents.(14, 15, 17, 19, 20) If an oxidizer is found, the waste will undergo appropriate treatment.

ii. Wastes within the RWMC TSA-Pad A are not part of the AMWTP inventory.

Wastes within the Pre-1980 INL-Exhumed SDA Homogenous Solids Preliminary Waste Group are not expected to be capable of causing fire through friction, absorption of moisture, or spontaneous chemical change. If such wastes are found, the waste will undergo treatment.

Wastes within the Pre-1980 INL-Exhumed SDA Homogenous Solids Preliminary Waste Group are not classified as an RCRA ignitable waste (i.e., EPA RCRA HWN D001).

5.5.1.2 Corrosivity

Wastes within the Pre-1980 INL-Exhumed SDA Homogenous Solids Preliminary Waste Group were retrieved, packaged, and transported to the TSA-RE during the mid to late 1970s prior to the identification of WIPP prohibited items (e.g., corrosive waste).

Wastes within the Pre-1980 INL-Exhumed SDA Homogenous Solids Preliminary Waste Group are not expected to meet the 40 CFR 261.21 definition of *corrosivity*. However, individual waste containers may contain corrosive liquids. The corrosive status for individual containers is determined on a case-by-case basis.

If found, containers that are identified as having prohibited liquids will be treated and managed on a case-by-case basis at the AMWTP. The AMWTP may use one or more of the following: Aquaset®, Aquaset II-G®, Petroset II®, Petroset II-G®, SP-400®, or Micro-Cel® E absorbents or other approved absorbents to ensure that any liquids associated with the waste are remediated and the waste is not corrosive due to prohibited liquids. [26, 27, 28, 30, 31, 82]

Wastes within the Pre-1980 INL-Exhumed SDA Homogenous Solids Preliminary Waste Group are not classified as a RCRA corrosive waste (i.e., EPA RCRA HWN D002).

5.5.1.3 Reactivity

Wastes within the Pre-1980 INL-Exhumed SDA Homogenous Solids Preliminary Waste Group were retrieved, packaged, and transported to the TSA-RE during the mid to late 1970s, before the identification of WIPP prohibited items (e.g., reactive waste).

Wastes within the Pre-1980 INL-Exhumed SDA Homogenous Solids Preliminary Waste Group are assigned RCRA listed HWNs F006, F007 and F009 and are associated with cyanide contamination (from cyanide electroplating operations). During the IDR and EWR, no adverse reactions were noted during the exhumation and/or repackaging activities. [14, 15, 17, 19, 20]

The concentration of cyanide in the Pre-1980 INL-Exhumed SDA Homogeneous Solids Preliminary Waste Group is not expected to generate toxic gases, vapors, or fumes when mixed with water or exposed to a pH between 2 and 12.5 in sufficient quantity to be a threat to human health or the environment. In addition, wastes with the Pre-1980 INL-Exhumed SDA Homogenous Solids Preliminary Waste Group are assumed to be stable and are not expected to undergo violent chemical change, react violently with water, form potentially explosive mixtures with water, or generate toxic gases, vapors, or fumes when mixed with water. The waste is not

expected to contain sulfide waste which, when exposed to a pH between 2 and 12.5, can generate toxic gases, vapors, or fumes in a quantity sufficient to present a danger to human health or the environment. The waste does not appear to be capable of detonation or explosive reaction if subjected to a strong initiating source if heated under confinement. The waste is not expected to be readily capable of detonation or explosive decomposition or reaction at standard temperature and pressure. The waste does not appear to contain explosive material and is not forbidden explosives or Division 1.1, 1.2, or 1.3 (Class A or B) explosives as defined in 49 CFR, Part 173.

Two EWR bins containing waste from Trench 5 were discovered in the AMWTP inventory with the words "may contain ordinance" labeled on the outside. These bins were subjected to x-ray scanning and RTR. After communication with key AMWTP and RWMC personnel and an explosive expert, they were confirmed to contain only debris, with no unexploded ordinance.[17, 42, 57]

Although wastes within the Pre-1980 INL-Exhumed SDA Homogenous Solids Preliminary Waste Group are not classified and are not expected to meet the 40 CFR 261.21 definition of *reactivity*, the possibility of adverse reaction on a case-by-case basis cannot be ruled out for the following reasons:

The SDA pits and trenches were known to receive a wide variety of waste and have included waste that would be potentially reactive. Examples of potential reactive waste include, but are not limited to, nitrate salts, lithium perchlorate, lithium metal/batteries, various elemental metal wastes (aluminum, sodium, potassium, uranium/"roaster oxide," plutonium), palladium, spent cyanide waste, pressurized containers/compressed gases such as unvented nickel carbonyl and spent carbon dioxide fire extinguishers, etc. In addition, known adverse reactions have occurred from managing roaster oxides within the SDA during ARP retrieval operations.[39, 40, 41, 44, 45, 46, 47, 48]

An INL SDA ARP engineering design file (EDF) was published by the Idaho Cleanup Project (ICP) that evaluated the possibility of retrieving unstable waste from Pits 4 and 6 of the INL SDA. The EDF concluded that possible binary combinations of wastes due to incidental mixing during retrieval operations revealed no incompatible combinations of waste, providing the repackaged waste is stored at ambient temperatures. Wastes within the Pre-1980 INL-Exhumed SDA Homogenous Solids Preliminary Waste Group that are associated with the AMWTP legacy waste inventory are assumed to meet the same conclusion.[40]

Wastes within the Pre-1980 INL-Exhumed SDA Homogenous Solids Preliminary Waste Group will be evaluated during RTR/VE and/or repackaging operations for potential reactive waste conditions (e.g., aerosol cans and/or, unusual waste forms such as reactive metals). Waste identified as having reactive properties (or having potential reactive properties) will be removed and/or subjected to treatment to remove the possible reactive property prior to shipment to WIPP.

Wastes within the Pre-1980 INL-Exhumed SDA Homogenous Solids Preliminary Waste Group are not classified as an RCRA reactive waste (i.e., EPA RCRA HWN D003).

5.5.1.4 Toxicity Characteristic

Wastes within the Pre-1980 INL-Exhumed SDA Homogenous Solids Preliminary Waste Group meet the criteria for TCLP metals and specific organics as defined in 40 CFR 261.24 (See Table 3).[36, 39, 41]

5.5.1.5 Listed Waste

Wastes within the Pre-1980 INL-Exhumed SDA Homogenous Solids Preliminary Waste Group meet the definition of a RCRA listed waste (See Table 3).[36, 39, 41]

5.5.1.5.1 F-Listed Waste

Wastes within the Pre-1980 INL-Exhumed SDA Homogenous Solids Preliminary Waste Group are assigned the F001, F002, F004, F005, F006, F007 and F009 HWNs.

RCRA F003 listed compounds acetone, butanol, ethyl acetate, ethyl benzene, methanol, methyl isobutyl ketone, xylene ethyl ether, and ethanol have been identified as contaminants within the waste group (See Table 3). Wastes within the Pre-1980 INL-Exhumed SDA Homogenous Solids Preliminary Waste Group are not classified as a RCRA ignitable waste.

Wastes within the Pre-1980 INL-Exhumed SDA Homogenous Solids Preliminary Waste Group are not assigned the RCRA F003 HWN.

5.5.1.5.2 P, U, and K-Listed Waste

A review of available AK for INL and off-site generators do not indicate K-listed waste being disposed into the INL SDA.

P and/or U listed wastes are known to be generated during certain INL laboratory operations. When P or U listed wastes are generated during laboratory operations they are typically managed separately and are managed in lab packs (since they are not normally radiologically contaminated). When radiologically contaminated wastes are assigned a P or U listed HWN it is usually the result of an infrequent generation situation or due to waste coming into the laboratory for analysis that was previously characterized as P or U listed waste (also infrequent).

Although hydrofluoric acid (HF) has been identified as a contaminant associated with wastes that are in the Pre-1980 INL-Exhumed SDA Homogenous Solids Preliminary Waste Group; however, the AK for the INL SDA does not support the disposal of unused HF within the INL SDA pits and trenches associated with this document, and as a result the U134 HWN is not assigned.

Waste exhumed from the INL SDA during the IDR and EWR projects was evaluated for P and U listed applicability in relation to the current INL SDA CERCLA characterization results for ARP waste. ARP wastes are similar in composition and generated from a similar process.

Additionally due consideration was given to the probability of encountering unused chemicals (e.g., cyanide pellets) during exhumation as a result of the IDR or EWR retrieval investigations.

Although P-listed wastes are identified with INL SDA ARP activities, the P-listed HWN status assigned to ARP waste is for unused cyanide waste that was previously disposed of within Pit 9. Unused cyanide waste is only associated with INL ARP actions.[jj] There is no AK retrieval evidence that unused cyanide was generated and placed in the AMWTP inventory as a result of IDR or EWR retrieval investigations.(81)

Wastes within the Pre-1980 INL-Exhumed SDA Homogenous Solids Preliminary Waste Group are classified as beryllium contaminated wastes. There is no AK that indicates that there are containers of wastes within the Pre-1980 INL-Exhumed SDA Homogenous Solids Preliminary Waste Group that contain >1% (by weight) beryllium. Waste within the Pre-1980 INL-Exhumed SDA Homogenous Solids Preliminary Waste Group is assumed to be contaminated with less than 1% (by weight) beryllium.

There is no AK documentation associated with disposal of unused commercial chemical product comprised of beryllium powder that was disposed into the pits and trenches associated with this document. The EPA HWN P015 is not assigned to the waste.

Current AK documentation for the IDR or EWR retrieval investigations does not identify P, U or K-listed waste sources. The wastes within the Pre-1980 INL-Exhumed SDA Homogenous Solids Preliminary Waste Group do not meet the definition of an unused commercial chemical product whose sole active ingredient would meet a RCRA P, U, or K-listed RCRA waste. (14, 15, 17, 19, 20, 36, 39, 41, 43, 73, 74, 75, 76, 77, 78, 79)

Wastes within the Pre-1980 INL-Exhumed SDA Homogenous Solids Preliminary Waste Group are not classified as P, U, or K-listed RCRA waste.(36)

Individual containers undergo RTR and/or VE prior to treatment and/or off-site shipment.(63, 64, 65, 67, 68) Individual containers determined to contain potential waste that meet the criteria of P or U-listed waste within the INL-exhumed SDA Homogeneous Solids Preliminary Waste Group will be evaluated for appropriate disposition and management.

5.5.1.6 Radionuclides

See Section 4.4.2

5.5.1.7 Prohibited items

Individual containers of wastes within the Pre-1980 INL-Exhumed SDA Homogenous Solids Preliminary Waste Group may contain WIPP prohibited items. Wastes within the Pre-1980 INL-Exhumed SDA Homogenous Solids Preliminary Waste Group were retrieved,

jj. Only a probing of Pit 9 was conducted during the IDR and EWR Projects.

packaged, and transported to the TSA-RE during the mid to late 1970s prior to the identification of WIPP prohibited items. (See Sections: 4.4.3, 5.5.1.1, 5.5.1.2, 5.5.1.3).

Containers of wastes within the Pre-1980 INL-Exhumed SDA Homogenous Solids Preliminary Waste Group will undergo RTR or VE prior to treatment or off-site shipment.[63, 64, 65, 67, 68] Containers identified with WIPP prohibited items will undergo remediation as applicable.

5.5.1.8 Polychlorinated Biphenyls

Wastes within the Pre-1980 INL-Exhumed SDA Homogenous Solids Preliminary Waste Group are classified as PCB-contaminated wastes; however, individual containers within the waste group may be classified as non-PCB. Individual containers identified as containing non-PCB waste will be managed on a case-by-case basis.

6.0 HETEROGENEOUS DEBRIS PRELIMINARY WASTE GROUP INFORMATION

6.1 Waste Description

See Section 4.1.

6.2 Waste Generation

See Section 4.2.

6.3 Waste Volume

See Section 4.2.6.

6.4 Waste Packaging

See Section 4.3.

6.5 Waste Characterization

Wastes within the Pre-1980 INL-Exhumed SDA Heterogeneous Debris Preliminary Waste Group are classified as mixed waste (i.e., hazardous and radioactive) and are assigned the IDC SD-177. The waste has been managed as mixed waste since the late 1980s (See Section 4.4).

6.5.1 EPA Hazardous Waste Numbers

The HWNs applicable to wastes within the Pre-1980 INL-Exhumed SDA Heterogeneous Debris Preliminary Waste Group are identified in Table 3.

6.5.1.1 Ignitability

Wastes within the Pre-1980 INL-Exhumed SDA Heterogeneous Debris Preliminary Waste Group were retrieved, packaged, and transported to the TSA-RE during the mid to late 1970s before the identification of WIPP prohibited items (e.g., ignitable waste).

Wastes within the Pre-1980 INL-Exhumed SDA Heterogeneous Debris Preliminary Waste Group are not expected to meet the 40 CFR 261.21 definition of *ignitability*. However, individual waste containers may contain ignitable wastes. The ignitability status for individual containers is on a case-by-case basis.

Containers that are identified as having prohibited liquids will be treated at the AMWTP using one or more of the following: Aquaset®, Aquaset II-G®, Petroset II®, Petroset II-G®, SP-400®, or Micro-Cel® E absorbents or other approved absorbents to ensure that any liquids associated with the waste are remediated and the waste is not ignitable due to prohibited liquids. (26, 27, 28, 30, 31, 82)

Wastes within the Pre-1980 INL-Exhumed SDA Heterogeneous Debris Preliminary Waste Group are not compressed gas; however, containers of compressed gases have been documented as being disposed of within the INL SDA.(41) It is unknown if the wastes within the Pre-1980 INL-Exhumed SDA Heterogeneous Debris Preliminary Waste Group contain compressed gases.(14, 15, 17, 19, 20) If compressed gases are found during RTR or VE, they will be removed and/or undergo treatment.

Wastes within the Pre-1980 INL-Exhumed SDA Heterogeneous Debris Preliminary Waste Group are not expected to meet the U.S. Department of Transportation (DOT) definition of an *oxidizer* as defined in 49 CFR 173. If found, the waste will undergo treatment. RFP salt wastes (i.e., oxidizer) were transported to the RWMC TSA-Pad A; however, there may be some salt waste within the TSA-RE that was retrieved from the SDA.(15),kk No other potential oxidizer has been identified within retrieval documents. (14, 15, 17, 19, 20) If an oxidizer is found the waste will undergo appropriate treatment.

Wastes within the Pre-1980 INL-Exhumed SDA Heterogeneous Debris Preliminary Waste Group are not expected to be capable of causing fire through friction, absorption of moisture, or spontaneous chemical change. If found the waste will undergo treatment.

Wastes within the Pre-1980 INL-Exhumed SDA Heterogeneous Debris Preliminary Waste Group are not classified as an RCRA ignitable waste (i.e., EPA RCRA HWN D001).

---

kk. Wastes within the RWMC TSA-Pad A are not part of the AMWTP inventory.

6.5.1.2 Corrosivity

Wastes within the Pre-1980 INL-Exhumed SDA Heterogeneous Debris Preliminary Waste Group were retrieved, packaged, and transported to the TSA-RE during the mid to late 1970s prior to the identification of WIPP prohibited items (e.g., corrosive waste).

Wastes within the Pre-1980 INL-Exhumed SDA Heterogeneous Debris Preliminary Waste Group are not expected to meet the 40 CFR 261.21 definition of corrosivity. However individual waste containers may contain corrosive liquids. The corrosive status for individual containers is determined on a case-by-case basis.

Containers that are identified as having prohibited liquids will be treated at the AMWTP using one or more of the following: Aquaset®, Aquaset II-G®, Petroset II®, Petroset II-G®, SP-400®, or Micro-Cel® E absorbents or other approved absorbents to ensure that any liquids associated with the waste are remediated and the waste is not corrosive due to prohibited liquids.[26, 27, 28, 30, 31, 82]

Wastes within the Pre-1980 INL-Exhumed SDA Heterogeneous Debris Preliminary Waste Group are not classified as a RCRA corrosive waste (i.e., EPA RCRA HWN D002).

6.5.1.3 Reactivity

Wastes within the Pre-1980 INL-Exhumed SDA Heterogeneous Debris Preliminary Waste Group were retrieved, packaged, and transported to the TSA-RE during the mid to late 1970s prior to the identification of WIPP prohibited items (e.g., reactive waste).

Wastes within the Pre-1980 INL-Exhumed SDA Heterogeneous Debris Preliminary Waste Group are assigned RCRA listed HWNs F006, F007 and F009 and are associated with cyanide contamination (from cyanide electroplating operations). During the IDR and EWR, no adverse reactions were noted during the exhumation and/or repackaging activities.[14, 15, 17, 19, 20]

The concentration of cyanide in the Pre-1980 INL-Exhumed SDA Heterogeneous Debris Preliminary Waste Group is not expected to generate toxic gases, vapors, or fumes when mixed with water or exposed to a pH between 2 and 12.5 in sufficient quantity to be a threat to human health or the environment. The waste is assumed to have the same properties as current INL-SDA waste being retrieved and shipped to WIPP (i.e., ARP) and is classified as non-reactive. In addition, the waste within the Pre-1980 INL-Exhumed SDA Heterogeneous Debris Preliminary Waste Group is assumed to be stable and is not expected to undergo violent chemical change, react violently with water, form potentially explosive mixtures with water, or generate toxic gases, vapors, or fumes when mixed with water. The waste is not expected to contain sulfide waste which, when exposed to a pH between 2 and 12.5 can generate toxic gases, vapors, or fumes in a quantity sufficient to present a danger to human health or the environment. The waste does not appear to be capable of detonation or explosive reaction if subjected to a strong initiating source if heated under confinement. The waste is not expected to be readily capable of detonation or explosive decomposition or reaction at standard temperature and pressure. The

waste does not appear to contain explosive material and is not forbidden explosives or Division 1.1, 1.2, or 1.3 (Class A or B) explosives as defined in 49 CFR, Part 173.

Two EWR bins containing waste from trench 5 were discovered in the AMWTP inventory with the words "may contain ordinance" labeled on the outside. These bins were subjected to x-ray scanning and were confirmed to only contain debris with no unexploded ordinance through communication with key RWMC personnel and an explosive expert.[17, 42, 57]

Although wastes within the Pre-1980 INL-Exhumed SDA Heterogeneous Debris Preliminary Waste Group are not classified and are not expected to meet the 40 CFR 261.21 definition of *reactivity*, the possibility of adverse reaction on a case-by-case basis cannot be ruled out for the following reasons:

The INL SDA pits and trenches were known to receive a wide variety of waste and have included waste that would be potentially reactive. Examples of potentially reactive waste include, but are not limited to, nitrate salts, lithium perchlorate, lithium metal/batteries, various elemental metal wastes (aluminum, sodium, potassium, uranium/"roaster oxide," plutonium), palladium, spent cyanide waste, pressurized containers/compressed gases such as unvented nickel carbonyl and spent carbon dioxide fire extinguishers etc. In addition, known adverse reactions have occurred from managing roaster oxides within the INL SDA during ARP retrieval operations. [39, 40, 41, 44, 45, 46, 47, 48]Under the SDA ARP an EDF was published by the ICP that evaluated the possibility of retrieving unstable waste from portions of the INL SDA (i.e., Pits 4 and 6). The EDF concluded that possible binary combinations of wastes due to incidental mixing during retrieval operations revealed no incompatible combinations of waste, providing the repackaged waste is stored at ambient temperatures. Wastes within the Pre-1980 INL-Exhumed SDA Heterogeneous Debris Preliminary Waste Group that are associated with the AMWTP legacy waste inventory are assumed to meet the same conclusion.[40]

Wastes within the Pre-1980 INL-Exhumed SDA Heterogeneous Debris Preliminary Waste Group will be evaluated during RTR/VE and /or repackaging operations for potential reactive waste conditions (e.g., aerosol cans and/or, unusual waste forms such as reactive metals). Waste identified as having reactive properties (or having potential reactive properties) will be removed and/or subjected to treatment to remove the possible reactive property prior to shipment to WIPP.

Wastes within the Pre-1980 INL-Exhumed SDA Heterogeneous Debris Preliminary Waste Group are not classified as a RCRA reactive waste (i.e., EPA RCRA HWN D003).

6.5.1.4 Toxicity Characteristic

Wastes within the Pre-1980 INL-Exhumed SDA Heterogeneous Debris Preliminary Waste Group meet the criteria for TCLP metals and specific organics as defined in 40 CFR 261.24 (See Table 3).[36, 39, 41]

6.5.1.5 Listed Waste

Wastes within the Pre-1980 INL-Exhumed SDA Heterogeneous Debris Preliminary Waste Group meet the definition of a RCRA listed waste (See Table 3).[36, 39, 41]

6.5.1.5.1 F-Listed Waste

Wastes within the Pre-1980 INL-Exhumed SDA Heterogeneous Debris Preliminary Waste Group are assigned the F001, F002, F004, F005, F006, F007 and F009 HWNs.

RCRA F003 listed compounds: acetone, butanol, ethyl acetate, ethyl benzene, methanol, methyl isobutyl ketone, xylene ethyl ether, and ethanol have been identified as contaminants within the waste group (See Table 3). Wastes within the Pre-1980 INL-Exhumed SDA Heterogeneous Debris Preliminary Waste Group are not classified as a RCRA ignitable waste.

Wastes within the Pre-1980 INL-Exhumed SDA Heterogeneous Debris Preliminary Waste Group are not assigned the RCRA F003 HWN.

6.5.1.5.2 P, U, and K-Listed Waste

A review of available AK for INL and off-site generators do not indicate K-listed waste being disposed into the INL SDA.

A review of available AK for INL and off-site generators do not indicate P or U-listed waste being routinely generated and shipped to the INL SDA (or to the AMWTP). P and/or U listed wastes are known to be generated during certain laboratory operations. When P or U listed wastes are generated during laboratory operations they are typically managed separately and are managed in lab packs (since they are not normally radiologically contaminated). When radiologically contaminated wastes are assigned a P or U listed HWN, it usually is the result of an infrequent generation situation or due to waste coming into the laboratory for analysis that was previously characterized as P or U listed waste (also infrequent).

Although hydrofluoric acid (HF) has been identified as a contaminant associated with wastes that are in the Pre-1980 INL-Exhumed SDA Soils Preliminary Waste Group, there is no evidence that unused forms of HF were disposed of within the INL SDA and subsequently exhumed under the IDR or EWR Projects.[39, 40] The EPA RCRA HWN U134 is not assigned to the waste.

Waste exhumed from the INL SDA during the IDR and EWR projects was evaluated for P and U listed HWN applicability in relation to the current INL SDA CERCLA characterization results for ARP waste. ARP wastes are similar in composition and generated from a similar process. Additionally due consideration was given to the probability of encountering unused chemicals (e.g., cyanide pellets) during exhumation as a result of the IDR or EWR retrieval investigations.

Although P-listed wastes are identified with INL SDA ARP activities, the P-listed HWN status assigned to ARP waste is for unused cyanide waste that was previously disposed of within Pit 9. Unused cyanide waste is only associated with INL ARP actions.[ll] There is no AK retrieval evidence that unused cyanide was generated and placed in the AMWTP inventory as a result of IDR or EWR retrieval investigations.(81)

There is no AK documentation associated with disposal of unused commercial chemical product comprised of beryllium powder that was disposed into the pits and trenches associated with this document. The EPA HWN P015 is not assigned to the waste. (39, 40)

There is no evidence that indicates that the wastes within the Pre-1980 INL-Exhumed SDA Heterogeneous Debris Preliminary Waste Group meet the criteria for the EPA RCRA HWN P015 that is associated with an unused commercial chemical beryllium powder product.(39, 41) The EPA HWN P015 is not assigned to the waste.

Current AK documentation for the IDR or EWR retrieval investigations does not identify P, U, or K-listed waste sources. The wastes within the Pre-1980 INL-Exhumed SDA Heterogeneous Debris Preliminary Waste Group do not meet the definition of an unused commercial chemical product whose sole active ingredient would meet a RCRA P, U, or K-listed RCRA waste.(14, 15, 17, 19, 20, 36, 39, 41, 43, 73, 74, 75, 76, 77, 78, 79)

The wastes within the Pre-1980 INL-Exhumed SDA Heterogeneous Debris Preliminary Waste Group are not classified as P, U, or K-listed RCRA waste. (36)

Individual containers undergo RTR and/or VE prior to treatment and/or off-site shipment.(63, 64, 65, 67, 68) Individual containers determined to contain potential waste that meet the criteria of P or U-listed waste within the Pre-1980 INL-exhumed SDA Heterogeneous Debris Preliminary Waste Group will be evaluated for appropriate disposition and management.

6.5.1.6 Radionuclides

See Section 4.4.2.

6.5.1.7 Prohibited items

Individual containers of wastes within the Pre-1980 INL-Exhumed SDA Heterogeneous Debris Preliminary Waste Group may contain WIPP prohibited items. The INL-exhumed SDA investigation wastes were retrieved, packaged, and transported to the TSA-RE during the mid to late 1970s prior to the identification of WIPP prohibited items. (See Sections 4.4.3, 6.5.1.1, 6.5.1.2 and 6.5.1.3.)

ll. Only a probing of Pit 9 was conducted during the IDR and EWR Projects.

Containers of wastes within the Pre-1980 INL-Exhumed SDA Heterogeneous Debris Preliminary Waste Group will undergo RTR or VE prior to treatment or off-site shipment.[63, 64, 65, 67, 68] Containers identified with WIPP-prohibited items will undergo remediation as applicable.

6.5.1.8 Polychlorinated Biphenyls

Wastes within the Pre-1980 INL-Exhumed SDA Heterogeneous Debris Preliminary Waste Group are not classified as PCB-contaminated waste; however, individual containers within the waste group may contain PCB waste. Individual containers identified as containing PCB wastes will be managed on a case-by-case basis.[mm]

7.0 SOIL PRELIMINARY WASTE GROUP INFORMATION

7.1 Waste Description

See Section 4.1

7.2 Waste Generation

See Section 4.2

7.3 Waste Volume

See Section 4.2.6

7.4 Waste Packaging

See Section 4.3

7.5 Waste Characterization

Wastes within the Pre-1980 INL-Exhumed SDA Soil Preliminary Waste Group are classified as mixed waste (i.e., hazardous and radioactive) and are assigned the IDC SD-178. The waste has been managed as mixed waste since the late 1980s (See Section 4.4).

7.5.1 EPA Hazardous Waste Numbers

The HWNs applicable to Wastes within the Pre-1980 INL-Exhumed SDA Soil Preliminary Waste Group are identified in Table 3.

---

mm. If segregated and repackaged, the waste may be classified as an AMWTP newly generated waste (e.g., BN-600 or BN-604).

7.5.1.1 Ignitability

Wastes within the Pre-1980 INL-Exhumed SDA Soil Preliminary Waste Group were retrieved, packaged, and transported to the TSA-RE during the mid to late 1970s prior to the identification of WIPP prohibited items (e.g., ignitable waste) or effective controls on waste characteristics being received.

Wastes within the Pre-1980 INL-Exhumed SDA Soil Preliminary Waste Group are not expected to meet the 40 CFR 261.21 definition of ignitability. However individual waste containers may contain ignitable wastes. The ignitable status for individual containers is on a case-by-case basis.

Containers that are identified as having prohibited liquids will be treated at the AMWTP using one or more of the following: Aquaset®, Aquaset II-G®, Petroset II®, Petroset II-G®, SP-400®, or Micro-Cel® E absorbents or other approved absorbents to ensure that any liquids associated with the waste are remediated and the waste is not ignitable due to prohibited liquids.[26, 27, 28, 30, 31, 82]

The waste is not compressed gas; however, containers of compressed gases have been documented as being disposed of within the INL SDA.[41] It is unknown if wastes within the Pre-1980 INL-Exhumed SDA Soil Preliminary Waste Group contain compressed gases.[14, 15, 17, 19, 20] If compressed or containerized gases are found during RTR or VE, they will be removed and/or undergo treatment.

Wastes within the Pre-1980 INL-Exhumed SDA Soil Preliminary Waste Group are not expected to meet the U.S. Department of Transportation (DOT) definition of an oxidizer as defined in 49 CFR 173. If found the waste will undergo treatment. RFP salt wastes (i.e., oxidizer) were transported to the RWMC TSA-Pad A; however, there may be some salt waste within the TSA-RE that was retrieved from the SDA.[15,nn] No other potential oxidizer has been identified within retrieval documents.[14, 15, 17, 19, 20] If an oxidizer is found, the waste will undergo appropriate treatment.

Wastes within the Pre-1980 INL-Exhumed SDA Soil Preliminary Waste Group are not expected to be capable of causing fire through friction, absorption of moisture, or spontaneous chemical change. If found the waste will undergo treatment.

Wastes within the Pre-1980 INL-Exhumed SDA Soil Preliminary Waste Group are not classified as an RCRA ignitable waste (i.e., EPA RCRA HWN D001).

7.5.1.2 Corrosivity

Wastes within the Pre-1980 INL-Exhumed SDA Soil Preliminary Waste Group were retrieved, packaged, and transported to the TSA-RE during the mid to late 1970s prior to the

---

nn. Wastes within the RWMC TSA-Pad A are not part of the AMWTP inventory.

identification of WIPP prohibited items (e.g., corrosive waste) or effective controls on waste characteristics being received.

Wastes within the Pre-1980 INL-Exhumed SDA Soil Preliminary Waste Group are not expected to meet the 40 CFR 261.21 definition of corrosivity. However individual waste containers may contain corrosive liquids. The corrosive status for individual containers is determined on a case-by-case basis.

Containers that are identified as having prohibited liquids will be treated at the AMWTP using one or more of the following: Aquaset®, Aquaset II-G®, Petroset II®, Petroset II-G®, SP-400®, or Micro-Cel® E absorbents or other approved absorbents to ensure that any liquids associated with the waste are remediated and the waste is not corrosive due to prohibited liquids. (26, 27, 28, 30, 31, 82)

Wastes within the Pre-1980 INL-Exhumed SDA Soil Preliminary Waste Group are not classified as RCRA corrosive wastes (i.e., EPA RCRA HWN D002).

7.5.1.3 Reactivity

Wastes within the Pre-1980 INL-Exhumed SDA Soil Preliminary Waste Group were retrieved, packaged, and transported to the TSA-RE during the mid to late 1970s, before the identification of WIPP prohibited items (e.g., reactive waste) or effective controls on waste characteristics being received.

Wastes within the Pre-1980 INL-Exhumed SDA Soil Preliminary Waste Group are assigned RCRA listed HWNs F006, F007 and F009 and are associated with cyanide contamination (from cyanide electroplating operations). During the IDR and EWR, no adverse reactions were noted during the exhumation and/or repackaging activities. (14, 15, 17, 19, 20)

The concentration of cyanide in the Pre-1980 INL-Exhumed SDA Soil Preliminary Waste Group is not expected to generate toxic gases, vapors, or fumes when mixed with water or exposed to a pH between 2 and 12.5 in sufficient quantity to be a threat to human health or the environment. The waste is assumed to have the same properties as current INL-SDA waste being retrieved and shipped to WIPP (i.e., ARP) and is classified as non-reactive. In addition, wastes within the Pre-1980 INL-Exhumed SDA Soil Preliminary Waste Group are assumed to be stable and are not expected to undergo violent chemical change, react violently with water, form potentially explosive mixtures with water, or generate toxic gases, vapors, or fumes when mixed with water. The waste is not expected to contain sulfide waste which, when exposed to a pH between 2 and 12.5, can generate toxic gases, vapors, or fumes in a quantity sufficient to present a danger to human health or the environment. The waste does not appear to be capable of detonation or explosive reaction if subjected to a strong initiating source if heated under confinement. The waste is not expected to be readily capable of detonation or explosive decomposition or reaction at standard temperature and pressure. The waste does not appear to contain explosive material and is not forbidden explosives or Division 1.1, 1.2, or 1.3 (Class A or B) explosives as defined in 49 CFR, Part 173.

Two EWR bins containing waste from Trench 5 were discovered in the AMWTP inventory with the words "may contain ordinance" labeled on the outside. These bins were subjected to x-ray scanning and were confirmed to only contain debris with no unexploded ordinance through communication with key RWMC personnel and an explosive expert. (17, 42, 57)

Although wastes within the Pre-1980 INL-Exhumed SDA Soil Preliminary Waste Group are not classified and are not expected to meet the 40 CFR 261.21 definition of reactivity, the possibility of adverse reaction on a case-by-case basis cannot be ruled out for the following reasons:

The INL SDA pits and trenches were known to receive a wide variety of waste and have included waste that would be potentially reactive. Examples of potential reactive waste include, but are not limited to, nitrate salts, lithium perchlorate, lithium metal/batteries, various elemental metal wastes (aluminum, sodium, potassium, uranium/"roaster oxide," plutonium), palladium, spent cyanide waste, pressurized containers/compressed gases such as unvented nickel carbonyl and spent carbon dioxide fire extinguishers, etc. In addition, known adverse reactions have occurred from managing roaster oxides within the INL SDA during ARP retrieval operations.(39, 40, 41, 44, 45, 46, 47, 48)

Under the SDA ARP, an EDF was published by the ICP that evaluated the possibility of retrieving unstable waste from portions of the INL SDA (i.e., Pits 4 and 6). The EDF concluded that possible binary combinations of wastes due to incidental mixing during retrieval operations revealed no incompatible combinations of waste, providing the repackaged waste is stored at ambient temperatures. Wastes within the Pre-1980 INL-Exhumed SDA Soil Preliminary Waste Group that are associated with the AMWTP legacy waste inventory are assumed to meet the same conclusion.(40)

Wastes within the Pre-1980 INL-Exhumed SDA Soil Preliminary Waste Group will be evaluated during RTR/VE and /or repackaging operations for potential reactive waste conditions (e.g., aerosol cans and/or unusual waste forms such as reactive metals). Waste identified as having reactive properties (or having potential reactive properties) will be removed and/or subjected to treatment to remove the possible reactive property before shipment to WIPP.

Wastes within the Pre-1980 INL-Exhumed SDA Soil Preliminary Waste Group are not classified as RCRA reactive wastes (i.e., EPA RCRA HWN D003).

7.5.1.4 Toxicity Characteristic

Wastes within the Pre-1980 INL-Exhumed SDA Soil Preliminary Waste Group meet the criteria for TCLP metals and specific organics as defined in 40 CFR 261.24 (See Table 3).(36, 39, 41)

7.5.1.5 Listed Waste

Wastes within the Pre-1980 INL-Exhumed SDA Soil Preliminary Waste Group meet the definition of RCRA-listed wastes (See Table 3).[36, 39, 41]

7.5.1.5.1 F-Listed Waste

Wastes within the Pre-1980 INL-Exhumed SDA Soil Preliminary Waste Group are assigned F001, F002, F004, F005, F006, F007 and F009 HWNs. RCRA F003 listed compounds: acetone, butanol, ethyl acetate, ethyl benzene, methanol, methyl isobutyl ketone, xylene ethyl ether, and ethanol have been identified as contaminants within the waste group (See Table 3). Wastes within the Pre-1980 INL-Exhumed SDA Soil Preliminary Waste Group are not classified as RCRA ignitable wastes.

Wastes within the Pre-1980 INL-Exhumed SDA Soil Preliminary Waste Group are not assigned the RCRA F003 HWN.

7.5.1.5.2 P, U, and K-Listed Waste

A review of available AK for INL and off-site generators do not indicate P or U-listed waste being routinely generated and shipped to the INL SDA (or to the AMWTP).

P and/or U listed wastes are known to be generated during certain laboratory operations. When P or U listed wastes are generated during laboratory operations they are typically managed separately and are managed in lab packs (since they are not normally radiologically contaminated). When radiologically contaminated wastes are assigned a P- or U-listed HWN, it usually is the result of an infrequent generation situation or due to waste coming into the laboratory for analysis that was previously characterized as P or U listed waste (also infrequent).

Waste exhumed from the INL SDA during the IDR and EWR projects was evaluated for P and U listed HWN applicability in relation to the current INL SDA CERCLA characterization results for ARP waste. ARP wastes are similar in composition and generated from a similar process. Additionally due consideration was given to probability of encountering unused chemicals (e.g., cyanide pellets) with exhumed IDR or EWR wastes during exhumation as a result of the IDR or EWR retrieval investigations.

Hydrofluoric acid (HF) has been identified as a contaminant associated with wastes that are in the Pre-1980 INL-Exhumed SDA Heterogeneous Debris Preliminary Waste Group; however, the AK for the INL SDA does not support the disposal of unused HF within the INL SDA pits and trenches associated with this document, and as a result the U134 HWN is not assigned.

Waste exhumed from the INL SDA during the IDR and EWR projects was evaluated for P and U listed applicability in relation to the current INL SDA CERCLA characterization results for ARP waste. ARP wastes are similar in composition and generated from a similar process.

Additionally due consideration was given to the probability of encountering unused chemicals (e.g., cyanide pellets) during exhumation as a result of the IDR or EWR retrieval investigations.

There is no AK retrieval evidence that unused cyanide was generated and placed in the AMWTP inventory as a result of IDR or EWR retrieval investigations.[81]

There is no AK documentation associated with disposal of unused commercial chemical product comprised of beryllium powder that was disposed into the pits and trenches associated with this document. The EPA HWN P015 is not assigned to the waste.[39, 40]

There is no evidence that indicates that the wastes within the Pre-1980 INL-Exhumed SDA Soil Preliminary Waste Group meet the criteria for the EPA RCRA HWN P015 that is associated with an unused commercial chemical beryllium powder product.[39, 41]

The EPA HWN P015 is not assigned to the waste.

Current AK documentation for the IDR or EWR retrieval investigations does not identify P, U or K-listed waste sources. The wastes within the Pre-1980 INL-Exhumed Soil Preliminary Waste Group do not meet the definition of an unused commercial chemical product whose sole active ingredient would meet a RCRA P, U or K-listed RCRA waste.[14, 15, 17, 19, 20, 36, 39, 41, 43, 73, 74, 75, 76, 77, 78, 79]

The wastes within the Pre-1980 INL-Exhumed SDA Soil Preliminary Waste Group are not classified as P, U, or K-listed RCRA waste.[36]

Individual containers undergo RTR and/or VE prior to treatment and/or off-site shipment.[63, 64, 65, 67, 68] Individual containers determined to contain waste that meet the criteria of P or U-listed waste within the Pre-1980 INL-Exhumed SDA Soil Preliminary Waste Group will be evaluated for appropriate disposition and management.

7.5.2 Radionuclides

See Section 4.4.2

7.5.3 Prohibited Items

Individual containers of wastes within the Pre-1980 INL-Exhumed SDA Soil Preliminary Waste Group may contain WIPP-prohibited items. Wastes within the Pre-1980 INL-Exhumed SDA Soil Waste Group were retrieved, packaged, and transported to the TSA-RE during the mid to late 1970s prior to the identification of WIPP prohibited items. (See Sections 4.4.3, 7.5.1.1, 7.5.1.2 and 7.5.1.3).

Containers of wastes within the Pre-1980 INL-Exhumed SDA Soil Preliminary Waste Group will undergo RTR or VE prior to treatment or off-site shipment.[63, 64, 65, 67, 68] Containers identified with WIPP prohibited items will undergo remediation as applicable.

7.5.3.1 Polychlorinated Biphenyls

Wastes within the Pre-1980 INL-Exhumed SDA Soil Preliminary Waste Group are classified as PCB-contaminated waste; however, individual containers within the waste group may be non-PCB. Individual containers identified as non-PCB waste will be managed on a case-by-case basis.

8.0 REFERENCES

1. DOE/ID-11359, Record of Decision for Radioactive Waste Management Complex Operable Unit 7-13/14, Revision 0, September 2008. [P1387S]

2. 42 USC § 9601 et seq., "Comprehensive Environmental Response, Compensation and Liability Act of 1980 (CERCLA/Superfund)," United States Code, 1980.

3. E-mail correspondence, between Tim Venneman (AMWTP) and Kirk Green (ICP), Pits 11 and 12 disposals, October 20, 2009. [C842S]

4. INEEL/EXT-03-01139, Preliminary Determination of Hazardous Waste from Other Generators Collocated with Rocky Flats Plant Transuranic Waste in the OU 7-13/14 Subsurface Disposal Area, May 2004, Idaho Completion Project. [P1372A]

5. MP-TRUW-8.1, Certification Plan for INL Transuranic Waste, current revision.

6. MP-TRUW-8.2, Quality Assurance Project Plan, current revision.

7. MP-TRUW-8.5, TRU Waste Certification, current revision.

8. INEL-95/0412, Waste Description Information for Transuranically-Contaminated Wastes Stored at the Idaho National Engineering Laboratory (includes Appendices A and B documents and a letter from John H. Kolts, DOE-ID to Frank Yaklich, BNFL Inc., B.D. Raivo, G. K. Becker, T. H. Smith, and G. L. Anderson. December 1995. [P365A]

9. Public Law 99-499, "Superfund Amendments and Reauthorization Act of 1986 (SARA)," U.S. Government, 1986.

10. Settlement Agreement: Public Service Company of Colorado v. Batt, October 16, 1995. [P860S]

11. MP-TRUW-8.13, Collection, Review, and Management of Acceptable Knowledge Documentation, current revision.

12. 40 CFR 300, "National Oil and Hazardous Substances Pollution Contingency Plan," Code of Federal Regulations, Office of the Federal Register.

13. INEEL/EXT-02-01125, Ancillary Basis for Risk Analysis of the Subsurface Disposal Area, K. Jean Holdren, Bruce H. Becker, Nancy L. Hampton, L. Don Koeppen, Swen O. Magnuson, T. J. Meyer, Gail L. Olson, A. Jeffrey Sondrup. September 27, 2002. [P755A]

14. TREE-1079, Initial Drum Retrieval Interim Report, EG&G Idaho, D. H. Card and D. K. Wang, May 1977. [P653S]

15. TREE-1286, Initial Drum Retrieval Final Report, EG&G Idaho, Kirk B. McKinley and Joseph D. McKinney, August 1978. [P652S]

16. ACI-120, Solid Radioactive Waste Retrieval Test, R.J. Thompson, Allied Chemical Corporation, Idaho Chemical Programs, Operations Office, National Reactor Testing Station, May 1972. [P758A]

17. TREE-1321, Early Waste Retrieval Final Report, EG&G Idaho, James R. Bishoff and Robert J. Hudson, August 1979. [P654S]

18. TREE-1061, Containment of Transuranic Contamination at the Early Waste Retrieval Project, Joseph L. Harness and Joseph D. McKinney, January 1977. [P655S]

19. TREE-1047, Early Waste Retrieval Interim Report, EG&G Idaho, D. H. Card, Manager, Retrieval Operations, February 1977. [P664A]

20. TREE-1265, Early Waste Retrieval Interim Report, EG&G Idaho, Kirk B. McKinley and Joseph D. McKinney, May 1978. [P753A]

21. INL NPL, 54 Fed. Reg. 44,184, EPA, November 21, 1989. [P1385S]

22. ID489008952, AMWTP HWMA/RCRA Permit and interim status documents.

23. 40 CFR Parts 260 through 270, current edition.

24. Material Data Safety Sheet Drierite®, CHEMTREC, No date. [P1461S]

25. DOE-ID, Federal Facility Agreement and Consent Order for the Idaho National Engineering Laboratory, Administrative Record No. 1088-06-29-120, U.S. Department of Energy Idaho Operations Office; U.S. Environmental Protection Agency, Region 10; Idaho Department of Health and Welfare, 1991. [P1386S]

26. Material Safety Data Sheets for Petroset II and Petroset IIG, Fluid Tech, Inc. June 8, 1998 and March 14, 2006. [P657S]

27. Material Safety Data Sheets, Aquaset® (sodium montmorillonite) and Aquaset II-G® (sepiolite), Fluid Tech, January 1, 2005 and November 11, 2008 [P881S]

28. Material Safety Data Sheets for Universal PIG® Absorbents (MSD-014) New Pig Corp. October 10, 2011. [P1376S]

29. Material Safety Data Sheets for Oil-Only PIG® Absorbents (MSD-016) New Pig Corp. August 3, 2011. [P1377S]

30. Material Safety Data Sheets for BLUE PIG® Sock Absorbents (MSD-029) New Pig Corp. February 9, 2011. [P1378S]

31. Material Safety Data Sheet, Micro-Cel® E, Celite Corporation, January 17, 2007 [P808S]

32. Joint NRC-EPA Draft Storage Guidance for Low-Level Mixed Waste, EPA-NRC, August 1, 1995. [P1088S]

33. RPT-TRUW-05, Waste Matrix Code Reference Manual, current revision

34. Nuclear Waste Policy Act of 1982, 1982. [P757A]

35. DOE/WIPP-02-3122, Transuranic Waste Acceptance Criteria for the Waste Isolation Pilot Plant. [P362A]

36. RPT-TRUW-12, AMWTP Waste Stream Designations, current revision

37. DOE M 435.1, DOE Radioactive Waste Management Manual. [P1183A]

38. DOE O 5820.1, "Management of Transuranic Contaminated Material," U.S. Department of Energy, 1982. [P1404A]

39. ICP/EXT-06-01203, Central Characterization Project Acceptable Knowledge Summary Report for Waste Retrieved from Designated Areas within the Subsurface Disposal Area at the Idaho National laboratory, CCP-AK-INL-001, current revision. [P647A]

40. EDF-5307, Chemical Compatibility and Inventory Evaluation for the Accelerated Retrieval Project and the Accelerated Retrieval Project II, Rev.1, August 9, 2006. [P1388A]

41. ICP/EXT-04-00248, Historical Background Report for Rocky Flats Plant Waste Shipped to the INEEL and Buried in the SDA from 1954 to 1971, North Wind, Inc. TRU Program Technical Services, Rev. 1, March 2005. [P443A]

42. CKA-003-09, Interoffice memorandum, Acceptable Knowledge Telecon/Interview Forms, June 17, 20009. [C1052A]

43. RPT-TRUW-56, Acceptable Knowledge Document for INL Stored Transuranic Waste - Rocky Flats Plant Waste, current revision.

44. INEL-95/0310 (Formerly EGG-WM-10903) Rev. 1, A Comprehensive Inventory of Radiological and Nonradiological Contaminants in Waste Buried in the Subsurface Disposal Area of the INEL RWMC During the Years 1952-1983, Vol. 1, August 1995. [P1389A]

45. INEL-95/0310 (Formerly EGG-WM-10903) Rev. 1, A Comprehensive Inventory of Radiological and Nonradiological Contaminants in Waste Buried in the Subsurface Disposal Area of the INEL RWMC During the Years 1952-1983, Vol. 2, August 1995. [P1390A]

46. INEL-95/0310 (Formerly EGG-WM-10903) Rev. 1, A Comprehensive Inventory of Radiological and Nonradiological Contaminants in Waste Buried in the Subsurface Disposal Area of the INEL RWMC During the Years 1952-1983, Vol. 3, August 1995. [P1391A]

47. INEL-95/0310 (Formerly EGG-WM-10903) Rev. 1, A Comprehensive Inventory of Radiological and Nonradiological Contaminants in Waste Buried in the Subsurface Disposal Area of the INEL RWMC During the Years 1952-1983, Vol. 4, August 1995. [P1392A]

48. INEL-95/0310 (Formerly EGG-WM-10903) Rev. 1, A Comprehensive Inventory of Radiological and Nonradiological Contaminants in Waste Buried in the Subsurface Disposal Area of the INEL RWMC During the Years 1952-1983, Vol. 5, August 1995. [P1393A]

49. EDF-369, Hazardous Waste Constituents of INEL Contact-Handled Stored Transuranic Waste. D. E. Kudera. May 19, 1989. [P307A]

50. Waste Isolation Pilot Plant Hazardous Waste Facility Permit, New Mexico Environment Department, NM4890139088-TSDF, current revision.

51. AEC, "Policy Statement Regarding Solid Waste Burial," Immediate Action Directive No. 0511-21, U.S. Atomic Energy Commission, 1970.

52. Evaluation of Naval Reactors Facility Radioactive Waste Disposed of at the Radioactive Waste Management Complex, Forwarding of; S. L. Dunn, Manager Naval Reactors Idaho Branch Office; NR: IBO-05/023; February 3, 2005. [C482A]

53. EGG-WTD-9438, Rev 1, A Brief Analysis and Description of Transuranic Wastes in the Subsurface Disposal Area of the Radioactive Waste Management Complex at INEL, D. A. Arrenholz and J. L. Knight, November 22, 1991. [P1403S]

54. EDF-154, <100 nCi/gm Waste in Retrievable Storage at the RWMC, H. M. Batchelder and R. M. Brown, July 19, 1983. [P829A]

55. INST-OI-24, Packaging Radioactive Waste, current revision.

56. INEL-95/0343, Work Plan for Operable Unit (OU) 7-13 & 7-14 Waste Area Group (WAG-7) Comprehensive Remedial Investigation Feasibility Study (RI/FS) and Addendums, T. A. Bensen and K. Jean Holdren, May 1, 1996; August 1998, August 2004. [P1405A]

57. Guidance for the Movement of MIII Bin that May Contain Explosive Ordnance, Joseph C. Cook, June 25, 2009. [P1406A]

58. RPT-TRUW-07, Determination of Radioisotopic Content in TRU Waste Based on Acceptable Knowledge, current revision.

59. Title 10 CFR, Part 962, Byproduct Material, Department of Energy, May 1, 1987. [P1086S]

60. Public Law 102-386, Federal Facilities Act of 1992, U.S. Congress, October 6, 1992. [P1407S]

61. Overview of an Integrated Comprehensive Environmental Response, Compensation and Liability Act Evaluation of the Subsurface Disposal Area at the Idaho National Engineering and Environmental Laboratory, K. J. Holdren, August 4, 2002. [P1411S]

62. EGG-WM-9707, Radioactive Waste Management Complex Investigation Report, volumes 1 through 4, M. L. Paarmann, December 1991. [P1412S]

63. INST-OI-12, Real-Time Radiography Operations (Drum) , current revision.

64. INST-OI-41, RTR Operations (Box), current revision.

65. INST-OI-81, RTR Operations (For WIPP Certification of Boxes), current revision.

66. INST-OI-14, Drum Assay Operations, current revision.

67. INST-OI-34, Non-Facility Visual Examination Operations, current revision.

68. INST-FOI-17, Facility Visual Examination Operations, current revision.

69. INST-FOI-01, In-Plant Drum Assay Operations, current revision.

70. INST-OI-15, Box Assay Operations, current revision.

71. CCP-PO-003, CCP Transuranic Authorized Methods for Payload Control (CCP-CH-TRAMPAC), current revision.

72. EGG-WM-8727, Subsurface Disposal Area (SDA) Waste Identification (1952-1970 Emphasis), Rev. 2, M. J. Vigil, INEL Environmental Restoration Program, January 24, 1990. [P847S]

73. RPT-TRUW-04, Acceptable Knowledge Document for the Battelle Columbus Laboratories Building JN-4 Plutonium Laboratory, current revision.

74. RPT-TRUW-13, Acceptable Knowledge Document for INL Stored Transuranic Waste - Mound Plant Waste, current revision.

75. RPT-TRUW-60, Acceptable Knowledge Document for INL Stored Waste - Bettis Atomic Power Laboratory, current revision.

76. RPT-TRUW-79, Acceptable Knowledge Document for Materials and Fuels Complex (MFC) Waste, current revision.

77. RPT-TRUW-82, Acceptable Knowledge Document for Hanford Debris Waste Shipped to AMWTP, current revision.

78. RPT-TRUW-89, Acceptable Knowledge Document for Argonne National Laboratory-East Waste, current revision.

79. RPT-670, CH2M-WG Idaho Process Knowledge Summary Report for CH TRU Waste and Mixed Low-Level Waste Generated at INTEC and RWMC Analytical Laboratories in Support of AMWTP Sampling Activities, Waste Matrix Codes: S5490 and S3900, Idaho Cleanup Project, current revision. [P891A]

80. ICP/EXT-04-00717, Summary of Rocky Flats Plant Waste Buried in the Subsurface Disposal Area, Edward Vejvoda, April 2005. [P759S]

81. Discrepancy report addressing P-listed HWNs associated with INL SDA ARP activities, AMWTP, August 20, 2012. [D087S]

82. Material Data Safety Sheet SP-400®, WaterWorks, No date. [P1432S]

83. TV-TV-002-12, Estimated Waste Stream Volumes for Pre-1980 INL-Exhumed SDA wastes. [C1069A]

84. Public Law 102-579, WIPP Land Withdrawal Act (Nuclear Waste Policy Act of 1982), 1982. [P1674A]

Appendix A –
Material/Chemical Inputs for Preliminary Waste Groups

Table A-1. Historical chemical contaminants and material inputs to the INL SDA pits and trenches.

Chemical Contaminants or Material Inputs [1, 4, 26, 27, 28, 29, 30, 31, 39, 41, 43, 44, 45, 46, 47, 48, 53, 56, 62, 72, 82]		
(1,2-Cyclohexylene dinitrilo) tetra-acetic acid	Diethylenetriamine	Plutonium-aluminum alloy
1,1,1,2-Tetrachloroethane	Diethylenetriaminepenta acetate	Plutonium-beryllium Neutron source
1,1,2-Trichloro-1,2,2-trifluoroethane (Freon TF)	Diglyme bis (2-methoxyethyl) ether	Plutonium carbide
1,1,2-Trichloroethane	Dihexyl diethylcabonyl methylene phosphonate	Plutonium-gallium alloy
1,1,2,2-Tetrachloroethane	Dihexylhexylphosphine oxide	Plutonium hydride
1,1,2,3,3,3-Hexafluoro-1-propene 1,1-Biphenyl	Dihydrogen phosphate	Plutonium nitride
1,1-Dichloroethane	Dimethoxymethane	Plutonium tetrafluoride
1,1-Dichloroethylene	Dimethyl polysiloxane	Polyamide resin
1,1-Difluoroethane	Dimethyl dichlorosilane	Polyamine adduct
1,2,4-Trimethylbenzene	Dimethyl formamide	Polybutene
1,2,4,5-Tetrachlorobenzene	Dimethyl phthalate	Polychlorinated biphenyls Pentachlorobiphenyl
1,2-Butylene oxide	Dimethyl silicone fluid	Polychlorotrifluoroethylene
1,2-Dichlorobenzene	Dimethyl sulfate	Polydimethylsiloxane
1,2-Dichloroethane	Dimethyl sulfoxide	Polyethylene glycol ester
1,2-Dichloroethane-d4	Dimethyl, methylhydrogen siloxane	Polyethylenepoly-amines
1,2-Dichloroethylene	Dimethyl, phenylmethyl siloxane, trimethyl terminated	Polyglycol
trans-1,2-Dichloroethylene	Dimethylamine	Polyglycol dimethlyacrylate
1,2-Dichloropropane	Dimethylglyoxime	Polyisocyanate adduct
1,2-Dichloropropylene	Di-n-butyl phthalate	Polyoxyalkylene glycol
1,3,5-Trimethylbenzene	Dipentene	Polyoxyethylene
1,3,5,7-Cyclooctatetraene	Diphenyls	Polyoxyethylene alkyl phenol adduct
1,4-Dichlorobenzene	Diphenylamine	Polyoxyethylene monostearate
1,4-Dichlorobenzene-d4	Diphenylethane	Polyoxyethylene phenol condensate
1,4-Difluorobenzene	Diphenyl oxide	Polyvinyl pyrrolidone
1,4-Difuorobenzene-d4	Dipropyl ether	Portland cement
1,4-bis-2,5-phenyl oxazolyl benzene	α-α′ Dipyridyl	
1-Methyl-2-propanol	Diisopropyl-fluoro-phosphate	Potassium 2- ethylhexanoate

Chemical Contaminants or Material Inputs [1, 4, 26, 27, 28, 29, 30, 31, 39, 41, 43, 44, 45, 46, 47, 48, 53, 56, 62, 72, 82]		
1-Phenyl-3-pyrazolidinone	Diisopropyl fluorophosphate	Potassium bromide
2-butoxyethanol	Disocium aspartate	Potassium carbonate
2-Fluorobiphenyl	Disodium hydrogen phosphate	Potassium chloride
2-Fluorophenol	Distilled tall oil fatty acids	Potassium chromate
2,2,2-Trifluoroethanol	Dithioloxalic acid	Potassium cyanide
2,2,4-Trimethylpentane	Divinylbenzene styrene, chloromethyl trimethylamine	Potassium dichromate
2,4-Dinitrophenol	Dodecane	Potassium dihydrogen phosphate
2,4-Dinitrotoluene	Durasoil®	Potassium ferricyanide
2,4,6-Tribromophenol	Ethylenediaminetetraacetic acid (EDTA) (Versenes)	Potassium fluoride
2,6-Diterbutyl-4- methylphenol	Enriched uranium	Potassium hydrogen phthalate
2,6-Ditertbutyl-p-cresol	Enriched uranium metal, highly	Potassium hydroxide
2-Bromo-2-nitro-1, 3-propanediol	Enriched uranium metal, low	Potassium iodate
2-Butoxyethanol	Epoxy glues and adhesives	Potassium iodide
2-Ethoxyethanol	Epoxy resin	Potassium nitrate
2-Ethylhexanoic acid diester with tetraethylene glycol	Erbium nitrate	Potassium permanganate
2-Ethylhexanol	Erbium oxide	Potassium persulfate
2-Imidazolidinethione	Essential oils	Potassium p-toluene sulfonate
2-Nitropropane	Ethanol	Potassium salt 4-amino- 3,5,6-trichloropicolinic acid
2-Phenylphenol	Ethanolamine	Potassium sulfite
2-Picoline	Ether, not specific	Potassium vanadate
3-Methylcyclohexanol	Ethoxylated nonylphene	Powdered iron
3-methylcholanthrene	Ethoxylated tallow amine	Propane-1, 2-diol carbonate
4-Bromofluorobenzene	Ethyl acetamide	Propylamine
4-([2,4-Dihydroxy phenyl] azo) benzenesulfonic acid	Ethyl alcohol	Propylene carbonate
4,4'-DDT	Ethyl acrylate	Pyrene
4,4-Methylene-bis (2-chloroaniline)	Ethyl benzene	Pyridine
4-Methyl-2-pentanol	Ethyl ether	Quartz
9D-178 amine	Ethyl methacrylate	Quartz silica

Chemical Contaminants or Material Inputs [1, 4, 26, 27, 28, 29, 30, 31, 39, 41, 43, 44, 45, 46, 47, 48, 53, 56, 62, 72, 82]		
Absorbents/stabilization agents Aquaset®, Aquaset II-G®, Petroset II®, Petroset II-G®, PIGs® or Micro-Cel® Oil-Dri®	Ethyl silicate	Mineral dust, Crystalline Silica, Synthetic Calcium Silicate, Polypropylene material
Acenaphthalene	Ethylene dibromide	Quaterphenyl
Acenaphthene-d10	Ethylene glycol	Radioactive Lanthanum
Acetaldehyde	Ethylene glycol butyl ether	Red Iron Oxide
Acetamide	Ethylene glycol dinitrate	Resorcinol
Acetic Acid	Ethylene glycol monomethyl ether	Rheological
Acetic acid, glacial	Ethylene oxide	Rhodium metal
Acetic anhydride	Ethylstyrene copolymer, chloromethyl trimethylamine	Salicylic acid
Acetone	Ethyltriacetoxysilane	Samarium metal
Acetonitrile	Eutectic salt baths, not specific	Sand
Acetophenone	Explosive plasticizer	Sani-Phene disinfectant
Acetylacetonate	Fatty soap	Saran
Acetylene tetrabromide	Ferric chloride	sec-Butylbenzene
Acid Bond 660 (No Char A660)	Ferric nitrate	Selenium dioxide
Acid Orange 7	Ferric sulfate	Selenium metal
Acrylamide	Ferrite powder	Selenium powder
Acrylamide sodium acrylate copolymer with trideceth-6	Ferroin solution (ortho-phenanthrolineferrous complex)	Seperan
Acrylic acid	Ferrous sulfamate	Shell Vitrea oil
Acrylic material, not specified	Ferrous sulfate	Silica, crystalline
Acrylic enamel paint	Flocculating agents, not specific	Silica aero gel
Acrylic thinner	Fluoranthene	Silica gel
Acrylonitrile	Fluoranthrene.	Silicon carbide.
Activated carbon	Fluorene	
Alcohol (not specific)	Fluorescent dyestuff	Silicon dioxide
Alconox	Fluoride ion	Silicon dioxide, Synthetic amorphous
Aliphatic amine	Fluorinated hydrocarbons	Silicone oil
Aliphatic polyamine	Fluosilicic acid	Silver cyanide
Alkali phosphates	Formaldehyde	Silver metal
Alkaline permanganate	Formamide	Silver nitrate

Chemical Contaminants or Material Inputs [1, 4, 26, 27, 28, 29, 30, 31, 39, 41, 43, 44, 45, 46, 47, 48, 53, 56, 62, 72, 82]		
Alkoxylated diamine	Formic acid	Silver oxide
Alkyd resin	Furfural	Silver powder
Alkyl benzene	Freon, not specific	Silver sulfate
Alkyl dimethylbenzyl ammonium chloride	Gallium metal	Silver zeolilte
Alkyl dimethyldichlorobenzyl ammonium chloride	Gelatin	Soda lime
Alkyl polyether alcohol	Glycerol	Sodium
Alkylaryl phosphate	Glyceryl monolaurate	Sodium acetate
Alkylaryl phosphate ester	Glycol methylene ether	Sodium azide
Alkylaryl sulfonate	Gold metal	Sodium bicarbonate
Alkylated aromatics	Graphite	Sodium bichromate
Allyl alcohol	Graphite, powdered	Sodium bisulfate
Aluminosilicate fibers	Gypsum	Sodium borohydride
Aluminum chloride	Hafnium	Sodium carbonate
Aluminum fines/powder	Hafnium powder	Sodium carbonate, anhydrous
Aluminum hydroxide	Hastelloy-C	Sodium chlorate
Aluminum metal	Hastelloy-N	Sodium chromate
Aluminum nitrate	Heat-treatment salts, not specific	Sodium citrate
Aluminum nitride-silicon carbide	Hexachlorobenzene	Sodium cyanide
Aluminum oleate	Hexachlorobutadiene	Sodium cyclopentadienyl
Aluminum oxide	Hexachloroethane	Sodium dichromate
Aluminum silicate	Hexamethyldisilaxane	Sodium dodecylbenzene sulfonate
Aluminum-silicon alloy	Hexane	Sodium ferrocyanide
Aluminum sulfate	Hexanol	Sodium fluoride
Aluminum-cadmium alloy	Hexavalent chromium	Sodium hydroxide
American Industrial Oil No. 15	Hexine	Sodium hydroxide fusion
Amine compound	HMDZ-treated silica	Sodium hydroxyethylene diamine triacetate
Ammonium bicarbonate	Hydraulic oil	Sodium hypochloride
Ammonium bifluoride	Hydrazine	Sodium hypochlorite
Ammonium carbonate	Hydrazine hydrate	Sodium hypophosphite
Ammonium chloride	Hydrazine sulfate	Sodium lauryl sulfate

Chemical Contaminants or Material Inputs [1, 4, 26, 27, 28, 29, 30, 31, 39, 41, 43, 44, 45, 46, 47, 48, 53, 56, 62, 72, 82]		
Ammonium chromate	Hydriodic acid	Sodium metaborate
Ammonium fluoride	Hydrobromic acid	Sodium metal (NaK)
Ammonium hydroxide	Hydrocarbon resin	Sodium metasilicate
Ammonium molybdate	Hydrochloric acid	Sodium methyl cellulose
Ammonium nitrate	Hydrofluoric acid	Sodium nitrate
Ammonium oxalate	Hydrogenated terpheyls	Sodium oxalate
Ammonium persulfate	hydrogen fluoride Anhydrous	Sodium nitride
Ammonium purpurate acid	Hydrogen peroxide	Sodium nitrite
Ammonium sulfate	Hydroiodic acid	Sodium oxide
Ammonium thiocyanate	Hydroquinone	Sodium perchlorate
Ammonium thiosulfate	Hydrotreated light naphthenic petroleum distillates	Sodium peroxide
Ammonium vanadate	Hydrotreated light petroleum distillate	Sodium phosphate W
Amorphous silica	Hydrotreated residual oils (petroleum)	Sodium phosphate, tribasic
Aniline	Hydroxyacetic acid component of Lime-A-Way used in R&D operations. RFP: 779	Sodium Potassium
Anisole	Hydroxylamine hydrochloride	Sodium propionate
Anthophyllite	Hydroxylamine nitrate	Sodium silicate
Anthracene	Hydroxylamine sulfate	Sodium sulfate
Antigorite	Imbiber beads -Alkylstyrene Copolymer and 1% Kaolin	Sodium sulfide
Antimony	Iconel-X	Sodium sulfite
Aqua Regia	Iodine	Sodium tetraborate
Aromatic petroleum solvent	Iodine cyanide	Sodium tetraborate pentahydrate
Arsenic metal	Iron-chromium-yttrium alloy	Sodium tetraboride
Arsenic powder	Iron metal	Sodium thiocyanate
Arsenic trioxide	Iron oxide	Sodium thiosulfate
Arsenious oxide	Iron powder	Sodium tolytriazole
Asbestos	Iron sulfate	Sodium-potassium
Ascarite	Isobutyl alcohol (isobutanol)	Sodium triphosphate
Ascorbic acid	Isopropanol	Sodium tripolyphosphate
Atrazine	Isopropanol-d8	

Chemical Contaminants or Material Inputs [1, 4, 26, 27, 28, 29, 30, 31, 39, 41, 43, 44, 45, 46, 47, 48, 53, 56, 62, 72, 82]		
Auramine	Isopropyl benzene	Solvent deasphaltedresidual petroleum oil
Barium carbonate	Kaolin	Soiltac®
Barium chloride	Kerosene	Solvent-dewaxed heavy paraffinic petroleum distillates
Barium fluoride	Ketone-based solvent	Solvent-dewaxed residual oils (petroleum)
Barium	Lanthanum metal	Solvent refined paraffinic petroleum oil
Barium powder	Lanthanum nitrate	Sorbitan monostearate
Barium sulfate	Lead acetate	SP-400 granular absorbent
Benzaldehyde	Lead chloride	Spill-X-A (magnesium oxide, magnesium aluminum silicate, sodium carbonate, sodium
Benzene	Lead fluoroborate	Alkylnaphthalenesulfonate)
Benzenesulfonyl chloride	Lead metal	Spill-X-C
Benzidine	Lead nitrate	Stainless steel metal
Benzine	Lead oxide	Stainless steel-boron alloy
Benzyl alcohol	Lead-based paint	Stannous chloride
Benzyl chloride	Lead Peroxide	Stannous octoate
Benzyl triphenyl phosphonium bisphenol	Lead-plutonium alloy	Starch
Benzylamine	Lead powder	Steight run middle petroleum distillate
Beryllium metal	Lime	Stoddard Solvent
Beryllium oxide	Limestone	Strychnine
Beryllium powder	Lithium-aluminum hydride	Styrene-divinylbenzene copolymer
Beryllium sulfate	Lithium borate	Scrap Styrofoam was dissolved using trichloroethylene.
Beryllium-copper alloy	Lithium carbonate	Sulfamic acid
Biphenyl (Ethylated)	Lithium chloride	Sulfide standards
bis(2-ethylhexyl) phthalate	Lithium fluoride	Sulfonated castor oil
Bisphenol A-diglycidyl ether epoxy resin (Araldite 6004)	Lithium hydride	Sulfur
Bisphenol Aepichlorohydrin epoxy resin	Lithium metal	Sulfur hexafluoride
bis(tri-n-butyltin)oxide	Lithium oxide	Sulfur powder
Bismuth nitrate	Lithium perchlorate	Sulfuric acid

Chemical Contaminants or Material Inputs [1, 4, 26, 27, 28, 29, 30, 31, 39, 41, 43, 44, 45, 46, 47, 48, 53, 56, 62, 72, 82]		
Bismuth oxide	Lithium salts, not specific	Tall oil and bottoms
Bismuth powder	Lithium tetraborate fusion	Tantalum carbide
Bisphenol	Lutetium oxide	Tantalum metal
bis-phenol	Lutetium powder	Tantalum nitride
Boric acid	Magnesia Cement	Tantalum oxide
Boron	Magnesium aluminum silicate	Tantalum powder.
Boron carbide	Magnesium carbonate	Tartaric acid
Boron nitride	Magnesium chloride	Tartrate
Boron powder	Magnesium fluoride	Teflon
Boron trioxide	Magnesium metal	Terphenyls
Boron-aluminum alloy	Magnesium oxide	Terphenyl-d14
Brass metal	Magnesium perchlorate	tert-butyl alcohol (2-methyl-2-propanol; trimethyl methanol)
Bromine	Magnesium powder	Tetrabromoethylene
Bromobenzene	Magnesium silicate	Tetrabutyl ammonium hydroxide
Bromodichloromethane	Magnesium stearate	Tetracalcium aluminoferrite
Bromoform	Magnesium sulfate	Tetradecane
Bromophenol Blue	Magnesium zirconate	Tetrahydrofuran
Bromthymol Blue	Magnesium-aluminum-zinc manganese alloy	Tetrahydronapthalene
Butanol	Magnesium-lead alloy	Tetramethyl pararsanilin
Butyl acetate	Magnesium-zinc alloy	Tetrasodium pyrophosphate
Butyl Carbitol®	Magnesocene	Thallic oxide
	Magnetite concrete	Thallium cyclopentadienyl
Butyl lactate	Maleic anhydride	Thallium metal
Butyl Stearate	Malonic acid	Thallium
Butylamine	Medium aliphatic petroleum solvent	Thenoyl trifluoroacetone
Butyraldehyde	Mercuric chloride	Thiourea
Cadmium cyanide	Mercuric oxide	Thiocyanate
Cadmium metal	Mercury metal	Thorium carbide
Cadmium nitrate	Mercury nitrate	Thorium metal
Cadmium oxide	Mercury vapor	Thorium nitrate

Chemical Contaminants or Material Inputs [1, 4, 26, 27, 28, 29, 30, 31, 39, 41, 43, 44, 45, 46, 47, 48, 53, 56, 62, 72, 82]		
Cadmium powder	Mercury/Thallium	Thorium oxide
Cadmium salts, non-specific	Metalphthalein	Thorium, nuclear grade
Calcium carbonate	Methachlor	Thullium metal
Calcium chloride	Methanol	Thullium powder/filings
Calcium chromate	Methyl 2-cyanoacrylate	Tin metal
Calcium fluoride	Methyl acetonacetate	Tin oxide
Calcium hydroxide	Methyl cellosolve	Titanium boride
Calcium hypochlorite	Methyl cellulose	Titanium carbide
Calcium indicator	Methyl ethyl ketone	Titanium carbide-tungsten carbide-molybdenum carbide-aluminum oxide-cobalt
Calcium metal	Methyl iodide	Titanium chloride
Calcium nitrate	Methyl isobutyl ketone	Titanium dioxide
Calcium oxide	Methyl methacrylate	Titanium metal
Calcium powder	Methyl n-Amyl ketone	Titanium nitride
Calcium silicate	Methyl naphthalene	Titanium powder
Calcium-lead Alloy	Methyl orange	Titanium silicide
Calcium-lithium alloy	Methyl salicylate	Titanium sponge
Calcium-zinc alloy	Methylene bromide	Toluene
Carbon disulfide	Methylene chloride	Toluene-d8
Carbon tetrachloride	Methylene diphenyl 4,4'-diisocyanate	Toluene 2,4-diisocyanate
Carbon Tetrachloride	Methyltriacetoxysilane	Toluene sulfonamide
Carburizing compound (contains cyanide)	Mica	Tremolite
Castor oil	Mineral oil	Tri-aryl compounds
Ceramic, not specific	Modified aliphatic polyamine	Tributyl phosphate
Ceric sulfate	Molybdenum carbide	Trichloromethane
Cerium metal	Molybdenum metal	Tricalcium aluminate
Cerium monosulfide	Molybdenum powder	Tricalcium silicate
Cerium powder	Molybdenum sulfide	Trichloroethylene
Cesium chloride	Monel	Trichlorofluoromethane
Cesium, not specific	Monocyclic terpene	Trichloro-trifluoroethane – ethylene glycol monobutyl ether mixture

Chemical Contaminants or Material Inputs [1, 4, 26, 27, 28, 29, 30, 31, 39, 41, 43, 44, 45, 46, 47, 48, 53, 56, 62, 72, 82]		
Chlordane	mono- Heptadecylphosphoric acid	Triethanolamine
Chlorinated paraffin	Morpholine	Triethylbenzene
Chlorinated paraffin oil	n-Methylmorpholine	Triethylenetriamine
Chlorine trifluoride	Naphtha	Trifluoroacetic anhydride
Chloroacetic acid	Naphthalene	Triisooctomine
Chlorobenzene	Naphthalene-d8	Triisooctylamine
Chlorobenzene-d5	Naphthenic acid,	Trimethylamine
Chlorodiphenyl	Naphthenic mineral oil	Trimethylolpropane trimester
Chloroform	Natural uranium	Trimethyl-terminated dimethyl, phenymethly siloxane
Chloromethane	Neoprene	Tri-n-octyl phosphine oxide
Chromate inhibitor	Neptunium nitrate,	tris(Hydroxymethyl)aminomethane (THAM)
Chromates, not specific	n-Ethyl acetate	Trisodium phosphate
Chromic Acid	Nichrome	Tungstate
Chromium chloride	Nickel carbonyl	Tungsten boride
Chromium metal	Nickel chloride	Tungsten carbide.
Chromium nitrate	Nickel metal	Tungsten carbide-cobalt
Chromium oxide	Nickel nitrate	Tungsten disulfide
Chromium potassium sulfate	Nickel oxide	Tungsten metal
Chromium powder	Nickel powder	Tungsten Nitride
Chromium sulfate	Nickel sulfamate	Tungsten powder
Chromium trioxide (chromic acid, solid)	Nickel sulfate	Ultrasorb (diatomaceous earth, crystalline silica (quartz), and cristobolite.
Chrysene-d12	Niobium boride	Uranium aluminum alloy
Citric acid	Niobium carbide	Uranium carbide
Coal dust	Niobium nitride	Uranium hydride
Coal Tar TAN	Niobium oxide	Uranium oxide
Coal tar distillate solvent	Nitradd activator (fluoride salts in acetic acid)	Uranium oxide-stainless steel
Cobalt metal	Nitrate Salts	Uranium oxide-stainless steel cermit
Cobalt nitrate	Nitric acid	Uranium oxide-thorium oxide
Cobalt powder	Nitric acid	Uranium powder

Chemical Contaminants or Material Inputs [1, 4, 26, 27, 28, 29, 30, 31, 39, 41, 43, 44, 45, 46, 47, 48, 53, 56, 62, 72, 82]		
Copper-aluminum alloy	Nitrobenzene	Uranium-silicon-alluminum alloy powder
Copper cyanide	Nitrobenzene-d5	Uranium tricyclopentadienyl chloride
Copper metal	Nitrocellulose	Uranium trioxide
Copper sulfate	Nitroglycerin	Uranyl nitrate
Copper triethanolamine complex	Nitromethane	Uranyl nitrate hexahydrate
Cresol (-p, -o, -m) (2-Methylphenol, 3-Methylphenol 4-Methylphenol)	Nonylphenoxy polyethoxy ethanol	Urea
Crystalline silica	Nonylphenoxypoly (ethyleneoxy) ethanol	Vacuum pump oil (not specific)
Cumene hydroperoxide	n-Propoxypropanol	Vanadium carbide
Curium metal	o-Benzyl p-chlorophenol	Vanadium metal
Curium dioxide	Octamethylcyclotetrasiloxane	Vanadium oxide
Cyanide compounds, not specific	Octanol	Vanadium powder
Cyanide contaminated material, not specific	Octyl diphenyl phosphate	VascoMax® R
Cyanide plating solution, not specific	Oils (not specific)	VascoMax® T
Cyanide solutions, not specific	Oils, PCB	Vermiculite
Cyanide standards	Organic acids/phosphates (organophosphates), not specific	Vinyl chloride
Cycloaliphatic polyamine	o-phenanthroline	Vinylidene fluoridehexafluoropropene polymer
Cyclohexane	o-Toluidine	Vinyl plastic paint
Cyclohexanone	Oxalic acid	VM&P Naphtha
Cyclohexylamine	p-(methylamino) phenol sulfate	Warfarin
Cyclotrimethylene trinitramine	p-terphenyls	Wetting agent, not specific
Decafluorotriphenyl phosphine (DFTPP)	Paint	Windex
Depleted uranium alloy, not specific	Palladium metal	Winterfene
Depleted uranium	Paraffin-base petroleum oil	Wood
Depleted uranium metal	Paraffin wax	Xenon trioxide
Depleted uranium metal, highly enriched	Paraffin-kerosene	Xylene
Depleted uranium-molybdenum alloy	Paraformaldehyde	Xylol

Chemical Contaminants or Material Inputs (1, 4, 26, 27, 28, 29, 30, 31, 39, 41, 43, 44, 45, 46, 47, 48, 53, 56, 62, 72, 82)		
Depleted uranium molybdenum-niobium alloy	Paraldehyde	Yttrium metal
Depleted uranium molybdenum-titanium alloy	Parylene®	Yttrium nitrate
Depleted uranium molybdenum-zirconium alloy	p-Chloroaniline	Yttrium oxide
Depleted uranium neptunium alloy	Pentachlorophenol	Yttrium powder
Depleted uranium-niobium alloy Used in weapons production	Perchlorate	Zeolite
Depleted uranium-niobium titanium	Perchloric acid	Zinc bromide
Depleted uranium-niobium zirconium alloy	Perchloroethylene (Tetrachloroethylene)	Zinc chloride
Depleted uranium oxide: includes oxides of depleted uranium alloys (roaster oxide)	Perflluoro compounds	Zinc metal
Depleted uranium-titanium alloy	Perylene-d12	Zinc oxide
Deuterium oxide	Petrolatum	Zinc powder
Di-2-ethylhexyl phosphoric acid	Petroleum grease	Zircaloy®
Di-t-Butoxydiacetoxysilane	Petroleum naptha	Zircaloy® and stainless steel
Diacetone alcohol	Petroleum sulfonate	Zirconia
Diallyl phthalate	Petroleum sulfonate	Zirconium boride
Diammonium citrate	Phenanthrene	Zirconium carbide
Di-aryl compound	Phenanthrene-d10	Zirconium fluoride
Diatomaceous earth; Diatomite	Phenetole	Zirconium hydride
Diazodinitrophenol	Phenol	Zirconium metal
Dibutyl butyl phosphonate	Phenol-d6	Zirconium nitride
Dibutylcarbutol		Zirconium oxide
Dibutyl-N diethylcarbamoyl phosphonate-N	Phenol novolac	Zirconium phosphate
Dibutyl phthalate	Phenolphthalein	Zirconium silicide
Dicalcium silicate	Phenyl ether	
Dicesium hexachloroplutonate	Phenylacetaldehyde	
Dicesium plutonium	Phenylethylethanolamine	
hexachloride	Phenylmethylsiloxane	
Dichlorodifluoromethane	Phosphoric acid	

Chemical Contaminants or Material Inputs [1, 4, 26, 27, 28, 29, 30, 31, 39, 41, 43, 44, 45, 46, 47, 48, 53, 56, 62, 72, 82]		
Diethanolamine	Phosphorus pentoxide	
Diethyl ether	Phthalic anhydride	
Diethyl formamide	Picric Acid	
Diethyl phthalate	Pine oil	
Diethylbenzene	Platinized titanium	
Diethylene ether	Platinum metal	
Diethylene glycol	Platinum-iridium alloy	

DIVIDER

PAGE

RECORD
B-2013-0468
SWALKER
01/27/2014

1. Source Document Tracking Number: C1323A	2. Revision: 1

3. Category

- ☐ Published Documentation
- ☐ Unpublished Documentation
- ☑ Correspondence
- ☐ Discrepancy

4. Title/Description Information: BN510.3 Waste Volume Estimates for Los Alamos National Laboratory Inclusion into the Supercompacted Debris Waste Stream – JAV-011-13

Document Number: JAV-001-13
Revision: N/A
Author: Joe Velasquez
Date: 12/02/2013

5. AK Element	6. Generator Or Waste Type(s)	7. Location in Source Doc.	8. AK Information Summary:
WM5	BN, LA	All	Waste volume estimates for LANL debris waste
WS2	BN-550, LA-007, LA-009, LA-010	All	Waste volume estimates for LANL debris waste

9. Document Summary:

A memo to file detailing the estimated BN510.2 waste volume increase for the BN510.3 waste stream after the addition of the LANL debris waste.

The original document number TV-011-13 was revised to document number JAV-001-13, after it was revised to reflect updated waste volume calculations.

10. Source Document Data Limitations (if any):

None identified at this time.

11. AK Expert:	Joe Velasquez (Print)	(Sign)	12/23/2013 (Date)

Idaho Treatment Group

Idaho Treatment Group, LLC • 850 Energy Drive, Suite 100 • Idaho Falls, ID 83401-1502 • t: 1.208.557.7301 • f: 1.208.557.0963

To: File

From: J. Velasquez, Acceptable Knowledge Expert

Date: December 2, 2013

Re: BN510.3 Waste Volume Estimates for Los Alamos National Laboratory Inclusion into the Supercompacted Debris Waste Stream – JAV-001-13

The estimated volume for Los Alamos National Laboratory (LANL) debris waste is based off of the Advanced Mixed Waste Treatment Project (AMWTP) off-site waste profile Forms 1900 and the compactor capabilities of reducing debris waste volume to one fifth its original volume.[1, 2, 3 and 4)]

The AMWTP is projected to receive LANL debris waste. The LANL waste will be processed through the AMWTP WMF-676 supercompactor box line areas. The box line operations will initially repackage the LANL debris waste and produce 55-gallon drums for subsequent compaction. The compacted waste (i.e., pucks) will be repackaged into 100-gallon product drums for shipment to WIPP.

The Acceptable Knowledge (AK) summary for the AMWTP supercompactor operation RPT-TRUW-83 notes that the Supercompactor is a glovebox with a 2,000-ton capacity compactor and can size-reduce 55-gallon waste drums to roughly one-fifth their normal size.

The AMWTP off-site waste profile forms for LANL waste identifies the overall estimated LANL waste volume for three of the four LANL waste streams (i.e., IDCs LA-007, LA-009 and LA-010) at 48m^3. This overall LANL estimated volume is expected to be reduced to one fifth the estimated volume (as received) through the supercompaction process resulting in a final volume increase for the BN510.3 WSPF of 25, 100-gallon product drums (approximately 9 m^3).[1]

Based on the above, the BN510.3 WSPF and AK summary estimated volume increase will be from:

9,000 100-gallon product drums (3,411 m^3) to:

9025 100-gallon drums (3,420m^3)

Assumptions:

1. The estimated volume is based off the theoretical supercompactor capability which may not be achieved for all debris waste.
2. No change in the LANL volume is expected.
3. LANL waste will be repackaged through box line operations.

[1] Each 100-gallon product drum is estimated to contain a volume of .379 m^3.

References:

1. RPT-TRUW-83, Acceptable Knowledge Summary for Supercompacted Debris Waste
2. Form 1900, AMWTP offsite Waste Profile Form for LANL LA-MHD04.001, AMWTP, September 12, 2013. [P1999A]
3. Form 1900, AMWTP offsite Waste Profile Form for LANL LA-MHD09.001, September 12, 2013. P2001A]
4. Form 1900, AMWTP offsite Waste Profile Form for LANL LA-MHD01.001, AMWTP, September 12, 2013. [P1998A].

cc: George Byram
Steve Carpenter
Julie Collins
Caralea Hinkle-Daniel
Rachelle Hubler
Jason Lance
Randy Morris
Eric Schweinsberg
Gina Tedford
Joe Velasquez
Tim Venneman
Rand Watson
AMWTP Correspondence Control

DIVIDER PAGE

B-2011-0253

RECORD
CMB 10-28-09

AMWTP Advanced Mixed Waste Treatment Project	AK Source Document Review Summary	Form-1068, Rev. 4 Effective: 01/08/09 Page 1 of 2

Implementing Document: MP-TRUW-8.13

1. Source Document Tracking Number: P406A	2. Revision: 1

3. Category

- [x] Published Documentation
- [ ] Unpublished Documentation
- [ ] Correspondence
- [ ] Discrepancy

4. Title/Description Information: Chemical Compatibility Evaluation of Wastes for the Advanced Mixed Waste Treatment Project

Document Number: RPT-ESH-014
Revision: 5
Author: AMWTP (N. Brill approval)
Date: 2/17/2009

5. AK Element	6. Generator Or Waste Type(s)	7. Location in Source Doc.	8. AK Information Summary:
WM4	MTPL	Pg 2, Table 1	Classifies AMWTP waste into 41 potential reactivity groupings, designated by reactivity group numbers (RGNs).
WS4	ID-150, MD-805, MD-813, MD-834, RF-241	Pg 13, Table 2	Identifies the IDCs in potential incompatible RGN 2: Acids, Mineral, Oxidizing (reactivity type Oxidizers/Acids)
WS4	AE-100, MD-805, MD-811, MD-813, MD-834, RF-005, RF-241, RF-430	Pg 13, Table 2	Identifies the IDCs in potential incompatible RGN 104: Oxidizing Agents, Strong (reactivity type Oxidizers/Acids)
WS4	MD-835, MD-836	Table 2, Pg 13	Identifies the IDCs in potential incompatible RGN 10: Caustics (reactivity type Caustics)
WS4	IC-526, IC-603, RF-003, RF-700, RF-801, SD-703, SD-704, SD-705, SD-706	Pg 13, Table 2	Identifies the IDCs in potential incompatible RGN 2: Halogenated Organics (reactivity type Organics)

9. Document Summary:

Evaluates the chemical compatibility of existing (as defined within the AMWTP HWMA/RCRA Permit) TRU and low-level wastes that will be managed at the AMWTP. Uses the method described in USEPA report EDP-600/2-80-076 to evaluate 158 waste streams/IDCs and to determine compatibility of binary combinations of AMWTP waste.

Note: The source document for this record (RPT-ESH-014) is included in P406A Rev. 0 on EDMS, and may not be the most current version. The current version of the source document is located on Orion. P406A Rev. 1 issued to update AK Elements.

10. Source Document Data Limitations (if any):

This is an active document that could be revised.

11.	AK Expert:	John H. Davis Print	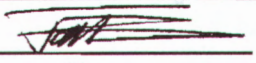 Sign	08/31/09 Date

AMWTP
Advanced Mixed Waste Treatment Project

RPT-ESH-014, Rev. 5

Chemical Compatibility Evaluation of Wastes for the Advanced Mixed Waste Treatment Project

Advanced Mixed Waste Treatment Project

Approved:

(Signature on file. See DCR-7022.)
Neil Brill
Environmental Compliance and Regulatory Affairs Manager

02/17/09
Date

Next Periodic Review: 11/30/09

TABLE OF CONTENTS

ACRONYMS iii

1.0 INTRODUCTION 1

1.1 Unknown Wastes 1

1.2 Wastes Identified with the potential for Spontaneous Combustion 3

1.3 Storage Compatibility 3

1.4 Treatment Compatibility 4

1.5 Transportation Compatibility 4

2.0 COMPATIBILITY EVALUATION METHODOLOGY 5

2.1 Steps for RGN Determination 5

2.2 Assumptions Used in Determining Overall Waste Storage/Treatment RGNs 6

3.0 RESULTS 10

4.0 REFERENCES 14

5.0 FIGURES 15

Figure 1. AMWTP Storage Treatment Comprehensive Hazardous Waste Compatibility Chart 16

Figure 2. AMWTP Specific Storage/Treatment Compatibility Chart. 17

Figure 3. AMWTP Compatibility Summary by IDC References 18

Attachment 1 AMWTP Hazardous Waste RGN Compatibility Determinations for Storage/Treatment A1

ACRONYMS

AK	acceptable knowledge
AMWTF	Advanced Mixed Waste Treatment Facility
AMWTP	Advanced Mixed Waste Treatment Project
ANL-E	Argonne National Laboratory-East
DOE	Department of Energy
DOT	Department of Transportation
EPA	Environmental Protection Agency
HSG	headspace gas
HWN	hazardous waste number
IDC	item description code
INL	Idaho National Laboratory
MW	mixed waste
OASIS	Organic and Sludge Immobilization System
PPMV	parts-per-million by volume
RFP	Rocky Flats Plant
RC	reaction code
RGN	reactivity group number
ROW	radioactive-only waste
RTR	real-time radiography
TRU	transuranic
TSA	Transuranic Storage Area
UNK	unknown waste
WIPP	Waste Isolation Pilot Plant
WSF	Waste Storage Facility

1.0 INTRODUCTION

The Advanced Mixed Waste Treatment Project (AMWTP) will retrieve, store, characterize, treat, and package an estimated 65,000 cubic meters of waste for disposal, primarily at the Waste Isolation Pilot Plant (WIPP). The majority of the waste was originally generated at the following Department of Energy (DOE) facilities: Argonne National Laboratory-East (ANL-E), Rocky Flats Plant (RFP), Mound Laboratories, Bettis Laboratories, and Battelle Columbus.

An evaluation of the chemical compatibility, where sufficient information is available, of existing (as defined within the AMWTP HWMA/RCRA Permit) transuranic (TRU) and low-level wastes that will be managed at the AMWTP is presented in this report. All known waste streams/item description codes (IDCs) handled at the Transuranic Storage Area (TSA), the Waste Storage Facility (WSF), Advanced Mixed Waste Treatment Facility (AMWTF), and associated facilities were evaluated for potential incompatibilities that may result when any two waste streams/IDCs are mixed or allowed to come in contact with one another. The method described in the U.S. Environmental Protection Agency (EPA) report, A Method for Determining the Compatibility of Hazardous Wastes (EPA-600/2-80-076, April 1980), was used to determine the compatibility of binary combinations of AMWTP wastes. This method provides a step-by-step compatibility analysis procedure and compatibility chart for evaluating potential adverse reactions should incompatible materials be combined. Chemicals/waste constituents were classified into 41 potential reactivity groupings, which are designated by reactivity group numbers (RGNs) as presented in Table 1. These RGNs are then displayed in a comprehensive hazardous waste compatibility chart that provides reaction codes (RCs; e.g., heat generation) for any binary combination of waste streams that could result in potential adverse reactions and their consequences.

The results of the compatibility evaluations are summarized below. A detailed explanation of the EPA method and how it was applied to AMWTP wastes is provided in Section 2.0. The detailed results are presented in Section 3.0 and references are presented in Section 4.0.

1.1 Unknown Wastes

Of the 158 waste streams/IDCs evaluated, wastes currently grouped under five IDCs were determined to require further investigation before compatibility evaluations can be completed. The IDCs for these unknown (UNK) wastes are INEEL/RF-000, RF 095, INEEL-156, Bettis-338, and Mound-838. These wastes include unlabeled waste containers retrieved from the TSA Retrieval Enclosure (TSA-RE) and waste identified under IDCs listed in report RPT-TRUW-12, Advanced Mixed Waste Treatment Project Waste Stream Designations, as "unknowns" (with respect to EPA hazardous waste numbers [HWNs] and waste constituents). Waste constituents for these unknown wastes were not identified in any of the documents cited (Section 4.0). RGN assignments cannot be made until appropriate IDCs, acceptable knowledge (AK) or analytical data characterization

information, and/or the identity has been determined for the unknowns. These containers must be separated by physical distance (3 ft) in storage.

Table 1. List of Chemical Reactivity Group Numbers (RGNs).

RGN[a]	Group Name	Example
1	***Acids, mineral, non-oxidizing***	Hydrochloric acid
2*	***Acids, mineral, oxidizing***	Nitric acid
3	***Acids, organic***	Oxalic acid
4	***Alcohols and glycols***	Methanol
5	Aldehydes	Formaldehyde
6	Amides	Acetamide
7	Amines, aliphatic and aromatic	Pyridine
8	Azo compounds, diazo compounds, and hydrazines	Hydrazine
9	Carbamates	Carbaryl
10*	***Caustics***	Sodium hydroxide
11	***Cyanides***	Cyanide plating bath solutions
12	Dithiocarbamates	Thiram
13	Esters	Butyl acetate
14	***Ethers***	Ethyl Ether
15	***Fluorides, inorganic***	Calcium fluoride
16	***Hydrocarbons, aromatic***	Benzene
17*	***Halogenated organics***	Carbon tetrachloride
18	Isocyanates	Methyl isocyanate
19	***Ketones***	Acetone
20	***Mercaptans and other organic sulfides***	Carbon disulfide
21	***Metals, alkali and alkaline earth, elemental and alloys***	Barium
22	***Metals, other elemental and alloys in the form of powders, vapors or***	Aluminum
23	***Metals, other elemental, and alloy, as sheets, rods, moldings, drops, etc.***	Lead
24	***Metals and metal compounds, toxic***	Beryllium
25	Nitrides	Sodium nitride
26	Nitriles	Acetonitrile
27	***Nitro compounds***	Nitrobenzene
28	***Hydrocarbons, aliphatic, unsaturated***	Vinyl benzene
29	***Hydrocarbons, aliphatic, saturated***	Cyclohexane
30	Peroxides and hydroperoxides, organic	Butyl peroxide
31	Phenols and creosols	Pentachlorophenol
32	***Organophosphates, phosphothioates, and phosphodithioates***	Malathion
33	Sulfides, inorganic	Hydrogen sulfide
34	Epoxides	Ethylene oxide
101	***Combustible and flammable materials, miscellaneous***	Oil
102	***Explosives***	Potassium nitrate
103	***Polymerizable compounds***	Vinyl benzene
104*	***Oxidizing agents, strong***	Sodium nitrate
105	Reducing agents, strong	Sodium
106	Water and mixtures containing water	Aqueous solutions
107	***Water reactive substances***	Lithium

a. Reactivity group numbers (RGNs) that are assigned to AMWTP individual waste constituents are shown in bold italics. However, only those RGNs shown with an asterisk (*) are retained for the overall waste stream storage/treatment RGNs and are included in AMWTP-specific waste compatibility charges (see Section 3.0).

1.2 Wastes Identified with the potential for Spontaneous Combustion

One waste stream/IDC (RF-241, americium process residue) has been identified as potentially posing a risk for spontaneous combustion because nitrate salts may be present along with cellulosic materials in the waste matrix. However, spontaneous combustion requires the addition of significant energy to start the reaction. Therefore, there are no segregation requirements for this IDC for storage.

1.3 Storage Compatibility

Fourteen waste streams/IDCs were identified as potentially posing compatibility concerns during storage. The 14 waste streams are included in four reactivity groupings:

- Halogenated organics (RF-003, -700, -801, BN-526, -603, SD-703, -704, -705, -706)
- Oxidizers (ANLE-100; Mound-805, -811, -813, -834; RF-005, -241, and -430)
- Acids (INL-150; RF-241; Mound-805, -813, and -834)
- Caustics (Mound-835 and -836).

Four of the 14 wastes are included in both the oxidizers and acids groupings (Mound-805, -813, -834, and RF-241). Based upon the EPA method described in Section 2.0, adverse reactions may occur between halogenated organics and wastes from any of the other three reactivity groupings (i.e., oxidizers, acids, and caustics), and between acids and caustics. However, as described below, additional evaluations were made to determine if the specific conditions exist in storage for these incompatibilities to be a significant concern.

According to the most current AK, all of the IDCs in the halogenated organics group and the caustics group are solidified sludge waste, soil, and debris, and do not contain free liquids. Therefore, no physical mechanism exists during storage that would cause the contents of these containers to mix unless free liquids are discovered during characterization via real-time radiography (RTR). Because of this, solidified sludge wastes do not pose incompatibility risks during storage if no free liquids are present. A conservative chemical evaluation has determined that acidic/caustic material does not exist in sufficient quantity to produce enough heat or gasses to cause a significant problem unless there are 5 gallons of free liquids or more in the container. Therefore, if the amount of free liquids in a container of acids or caustics is 5 gallons or more, it must be separated or physically segregated.

There are no incompatibility concerns between halogenated organics and caustics for storage because the reaction requires the addition of energy to start the reaction. No mechanism in storage exists to provide energy for initiation of the reaction.

The same chemical evaluation estimated the amount of toxic gases produced by mixing wastes from the halogenated organics, acids, and oxidizers group. As a result of this determination, any free liquids found in a container from the acids, oxidizers and halogenated organics group must be separated or physically segregated. Specifically, a container from the halogenated organics group with free liquids must be separated or physically segregated from acids and oxidizers, even if no free liquids are present in these containers. Similarly, a container from the acids or oxidizers group that contains free liquids must be separated or physically segregated from the halogenated organics group.

1.4 Treatment Compatibility

The same 14 waste streams/IDCs identified for storage also have the potential to cause compatibility concerns during treatment. Based upon the compatibility evaluation, treatment operations will not intermix wastes identified as halogenated organic with these identified as oxidizer, acid, or caustic; unless the waste streams/IDCs have been evaluated for compatibility concerns for that treatment process. All such compatibility evaluations shall be placed in the Facility Operating Record.

Additionally, caustic wastes will not be intermixed in treatment with acids. RF-241 will not be mixed with any other waste for the purpose of treatment. Treatment of IDC 241 via supercompaction does not present a concern as the supercompactor is designed to contain such an event in the unlikely event that a reaction does occur, and squeezants are appropriately handled and characterized to eliminate the potential issues.

1.5 Transportation Compatibility

Any container(s) packaged for shipment at the AMWTP shall comply with the Department of Transportation (DOT) requirements in lieu of the standards/requirements of this evaluation.

2.0 COMPATIBILITY EVALUATION METHODOLOGY

The method described in EPA-600/2-80-76, A Method for Determining the Compatibility of Hazardous Wastes, was used to determine the compatibility of binary combinations of the 158 waste streams stored and/or treated at the AMWTP facilities. The preliminary evaluation results are based on existing AK and analytical data. As additional characterization information becomes available from AMWTP operations and waste characterization efforts, these compatibility evaluations will be updated, as necessary.

2.1 Steps for RGN Determination

The following five steps were followed to determine the RGNs and RCs as recommended by the EPA-600/2-80-76 procedure for determining chemical compatibility. Additional information is provided in Figure 1, AMWTP Hazardous Waste RGN Compatibility Determinations for Storage/Treatment.

1. As much information as possible was obtained about the history and composition of the wastes: The references used extensively to identify waste constituents, AK, analytical data, and process/waste descriptions are provided in Section 4.0.
2. Specific chemical names and/or non-specific chemical classes were listed: The references containing the chemical constituents and/or chemical classes that may be present in the waste, as well as the overall matrix of each waste stream/IDC, where sufficient information is available, are listed in Section 4.0.
3. The chemicals and/or chemical classes applicable to each waste were found in Appendix 1 or Appendix 2 of EPA 600/2-80-76, and the RGNs were recorded: Appendix 1 was used to assign RGNs to specific chemicals and Appendix 2 was used to assign RGNs to chemical classes (e.g., acids or alcohols).

Up to three possible RGNs are listed in Figure 1, Columns RGN 1, RGN 2, and RGN 3. The actual RGN assigned for a specific waste constituent out of the three possible RGNs is listed in the RGN USED column. The decision, as to which of the three possible RGNs should be retained as the overall waste RGN USED, was based upon selecting the most likely behavior of the constituent in the waste by using the process description and general information listed in the references. (The assumptions and information used to make the RGN determinations are provided in Section 2.2.) For example, barium has three possible RGNs: 21, 24, and 107, and is found in waste stream RF 001, first stage sludge. Because RF-001 is waste water treatment sludge, barium is most likely to behave as RGN 24 (metals and metal compounds, toxic), rather than RGN 21 (metals, alkali and alkaline earth, elemental and alloys) or RGN 107 (water reactive substances). Therefore, the RGN USED for barium in RFP-001 is 24.

An RGN of zero (0) was assigned to inert waste constituents determined to be nonreactive from a compatibility standpoint. Examples of waste constituents assigned zero (0) RGNs include vermiculite, Portland cement, glass, graphite, asbestos, soil, bricks, etc.

4. Steps 2 and 3 were repeated: The RGNs (RGN 1, RGN 2, RGN 3, and RGN USED) were determined for the waste constituents/chemical classes of the remaining waste streams/IDCs.

Existing AK and/or analytical data were used to determine if a constituent's RGN USED should be retained as an overall waste RGN for storage and/or treatment (shown in Figure 1 in the RGN STRG and RGN TTMT columns). Whenever possible, this determination was based upon analytical data, primarily from the reference Acceptable Knowledge Document for INEEL Stored Transuranic Waste—Rocky Flats Plant Waste, INEL-96/0280, Rev. 3, February 2003. Generally, if constituents are present in trace amounts or if AK supports a conclusion that the constituent would not be reactive in the overall waste matrix, non-zero RGN USED constituents were revised to zeroes (0s) for RGN STRG and RGN TTMT. Additional details on the storage and treatment RGN determinations are provided in Section 2.2.

5. The Hazardous Waste Compatibility Chart provided in EPA-600/2-80-76 was used to determine the reaction codes for RCs for the binary waste combinations: The AMWTP-specific binary waste combinations were determined for 14 waste streams with RGNs of 2, 10, 17, and 104. For example, combining RGN 10 waste (caustics) with RGN 17 waste (halogenated organics) could result in heat generation and flammable gas generation, with RCs of 'H' and 'GF' respectively.

2.2 Assumptions Used in Determining Overall Waste Storage/Treatment RGNs

The assumptions used in assigning RGNs to individual waste constituents and in determining whether the overall waste stream retains any of the constituent RGNs are discussed here. These assumptions are based upon currently available AK and analytical data. As the AMWTP gathers additional characterization information and analytical data, the assumptions and compatibility evaluations in this report will be updated, as necessary.

1. There are no waste constituents contained in nonhazardous, radioactive-only waste (ROW) that would warrant an RGN. This assumes that the AK used to make the ROW determination is also sufficient to conclude that any waste constituents present are relatively inert with respect to potential adverse reactions. Given the broad scope of characteristic and listed hazardous waste components that are evaluated before an ROW designation is given to a waste stream, it is felt that this assumption is valid.

2. Each waste constituent is assigned up to 3 potential RGNs (shown in Figure 1 as RGN 1, RGN 2, and RGN 3). The assignment of these potential RGNs is based strictly upon the presence of the individual waste constituent or chemical class in the waste stream and does not take into account the concentration or waste-specific reactivity.

The actual RGN assigned to each constituent in the overall waste is listed as the "RGN USED" in Figure 1. The RGN USED determination is based upon selection of the potential RGN most representative of the constituent's behavior in the waste.

3. Inert waste constituents are assigned RGNs of zero (0).

4. Waste constituents with an RGN USED other than "0" are evaluated further to determine if the RGN USED should be retained for the overall waste stream when either stored or treated (RGN STRG and RGN TTMT in Figure 1). This determination is based upon documented AK and/or analytical data, whenever possible, and the analytical results are shown in the Figure 1 "Estimated Concentration (Est. Conc.)" column. AK and analytical data reported in Figure 1 were typically taken from Acceptable Knowledge Document for INEEL Stored Transuranic Waste—Rocky Flats Plant Waste (INEL-96/0280).

    A. If the values in the Figure 1 Estimated Concentration column are analytical results, they were indicated as such in the "Notes" column. For waste streams with both solids and headspace gas (HSG) analytical data available (i.e., some homogeneous solid wastes), the solids analytical data are preferentially used. Analytical results for solids are reported in weight percent and HSG results are reported in parts-per-million by volume (ppmv).

    B. AK characterization information and solids/HSG analytical results are provided in INEL 96/0280 for RF waste constituents with the following storage/treatment RGNs: 2 (acids, mineral, oxidizing), 4 (alcohols and glycols), 10 (caustics), 11 (cyanides), 16 (hydrocarbons, aromatic), 17 (halogenated organics), 19 (ketones), 22 (metals, other elemental and alloys in the form of powders, vapors, or sponges), 23 (metals, other elemental and alloy, as sheets, rods, moldings, drops, etc.), 24 (metals and metal compounds, toxic), 27 (nitro compounds), 29 (hydrocarbons, aliphatic, saturated), 101 (combustible and flammable materials), 104 (oxidizing agents), and 107 (water reactive substances).

C. In general, organic waste constituents in homogeneous solid sample results with mean concentrations greater than 0.5 weight percent (wt%) and organic waste constituents in HSG sample results with mean concentrations greater than 5,000 ppmv were assigned RGNs for storage and treatment. Also, if more than one constituent within the same RGN is present and the total concentration for the constituents exceeds 0.5 wt% or 5,000 ppmv, the RGN USED was carried over to RGN STRG and RGN TTMT for any constituent with a concentration above 0.1 wt% or 1,000 ppmv. For example, if a waste stream has methanol, butanol, and ethanol HSG concentrations of 2,500, 1,500, and 3,000 ppmv, respectively, all three constituents would appear in Figure 1 with storage and treatment RGNs of 4 (alcohols and glycols), even though no individual alcohol concentration is greater than 5,000 ppmv.

D. For RF wastes, constituent analytical data for one waste stream are used to make RGN determinations for similar waste streams that did not have analytical results. For example, RF-330 (paper and rags, dry) analytical results were applied to RF-831 (dry combustibles TRU mixed), because IDC 831 was assigned to wastes originally assigned to IDC 330. Another example includes the use of analytical data for RF-374 (blacktop, concrete, dirt, and sand) to also characterize RF-090 (dirt) and RF 990 (dirt), because IDC RF-374 replaced IDCs RF-090 and RF-990 in 1975.

E. The applicability of storage/treatment RGNs to corrosive waste constituents, (acids and caustics with RGNs of 2 and 10, respectively), oxidizers (RGN 104), and cyanide electroplating wastes (RGN 11) were also evaluated based upon information contained in INEL-96/0280 for RF wastes (e.g., pH measurement of free liquids), when available.

F. Metal compounds (RGNs 21 to 24) and generic combustible constituents (RGN 101, e.g., wood, plastic, clothing, paper, etc.) were generally assumed to be nonreactive with respect to storage/treatment RGN determinations. This assumption was supported by metal analytical results and the long-term storage of wastes without adverse reactions.

5. Process and waste descriptions contained in other references (as cited in the Figure 1 "Reference" column) were used whenever possible to make RGN determinations for non-RF wastes. However, documented AK and analytical data are not available in many cases for other waste generators (e.g., Mound and ANLE), and many of the associated wastes were assigned storage/treatment RGNs (RGNs 2, 10, and 104) because AK and analytical data are not currently available to show that these RGNs should not apply. EPA HWNs of D001 (for ignitable/oxidizers) and/or D002 (corrosives) have been identified in Figure 1 for most of these non-RF wastes/IDCs. It is anticipated that future AMWTP operational/characterization data may require that these storage/treatment RGNs be updated.

6. The compatibility evaluations included in this report were based upon expected waste constituents, concentrations, and physical and chemical properties for each particular waste/IDC as determined from AK. The current evaluations are not intended to encompass nonroutine waste constituents such as unknown liquids in inner containers, free liquids in debris drums, free liquids in sludge drums with pH less than 2 or greater than 12.5, unexpectedly high concentrations of organic compounds, etc. Compatibility evaluations for any nonroutine constituents or conditions will be performed on a case-by-case basis when additional characterization information has been obtained.

7. Determination that wastes do not warrant RGN assignment (e.g., oxidizer RGN for nitrates for RF-335, -338, and -490 wastes or caustic RGN for RF-290 and -292 wastes) in the compatibility evaluation based on recent AK information/data should be verified when more recent operational/characterization information becomes available. This initial evaluation is intended to provide a preliminary basis for identifying waste streams that warrant special consideration while in storage and/or treatment. It is not intended to justify removal of existing EPA HWNs (e.g., D001 and D002).

3.0 RESULTS

As discussed in Section 2.0, storage/treatment RGNs were assigned to those individual waste stream constituents that were determined to be present in concentrations that could lead to adverse reactions (as defined in 40 CFR 264.17, General Requirements for Ignitable, Reactive, or Incompatible Wastes) when mixed with other wastes and when the waste matrix was such that mixing of these constituents is deemed credible. The RGN determinations were based upon documented AK and/or analytical data, whenever possible. If AK or analytical data were not available and the process and/or waste descriptions were not detailed enough to rule out assignment of overall waste RGNs, the RGN USED values were conservatively retained for storage and treatment. It is anticipated that the conservative assignment of RGNs in this report may be updated in the future when additional characterization information becomes available. The new characterization data will also be used to either confirm or revise the preliminary storage/treatment RGNs reported here.

Overall waste storage/treatment RGN assignments are documented in Figure 1 under the columns RGN STRG and RGN TTMT, respectively. The compatibility evaluation method was then used to examine binary combinations of wastes that were assigned non-zero RGNs. This process makes no distinctions between the commingling of wastes from storage configurations or from treatment operations (such as waste repackaging, supercompaction, etc.). The storage and treatment RGNs for each waste stream are currently the same for those wastes that will be both stored and subsequently treated prior to shipment. However, Figure 1 has been formatted to allow for the possibility that in the future, storage and treatment RGNs may be different due to operational or administrative controls.

Among the 158 waste streams/IDCs evaluated, four storage/treatment RGNs were assigned to 14 waste streams. The four RGNs assigned to overall waste streams are 2 (acids, mineral, oxidizing), 10 (caustics), 17 (halogenated organics), and 104 (oxidizing agents, strong), with four of the AMWTP waste streams assigned both the acid and oxidizer RGNs. Four potentially incompatible RGN waste groupings are represented in Tables 2 and 3. In addition to identifying the 14 waste streams/IDCs and their associated RGNs and incompatible waste groupings, the container totals for each waste of concern is provided in Table 2. Summaries of potential adverse reactions that may occur if wastes from one RGN are mixed with wastes from an incompatible RGN are presented in Table 3.

Once all of the applicable storage/treatment RGNs were determined, two versions of the EPA hazardous waste compatibility chart were created (Figures 1 and 2). The primary difference between the two figures is scale. Figure 1 identifies the potential incompatibilities. Adverse reactions are illustrated on the Figure 1 chart with all 41 EPA reactivity groupings and the resulting RCs. AMWTP-specific RCs are shown in the boxes without shading. A closer look at the 14 waste streams designated with potentially incompatible RGNs that are applicable to AMWTP storage and treatment operations are illustrated in Figure 2. Additional waste stream information shown in Figure 2 includes EPA HWNs, waste generator, IDC description, and estimated number of containers in storage.

The wastes assigned to the RGN 17 halogenated organic category (RF 003, 700, 801, BN-526, -603, SD-703, -704, -705 and -706.) are potentially incompatible with the wastes from the other three RGNs (i.e., 2, 10, and 104). Additionally, the two caustic wastes assigned RGN 10 (Mound-835 and -836) are potentially incompatible with RGN 2 acidic wastes (INEEL-150; RF 241; and Mound 805, -813, and -834).

However, as described previously, separation or physical segregation requirements consist of the following:

Storage

- Containers of acids with 5 gallons or more of free liquids must be separated or physically segregated from caustics and containers of acids with any free liquids must be separated or physically segregated from halogenated organics.
- Containers of caustics with 5 gallons or more of free liquids must be separated or physically segregated from acids.
- Containers of oxidizers with any free liquids must be separated or physically segregated from halogenated organics.
- Containers of halogenated organics with any free liquids must be separated or physically segregated from acids and oxidizers.
- Containers with unknown waste must be separated by physical distance.

Treatment

- Containers of halogenated organics shall not be commingled/treated together with containers of acids, caustics, or oxidizers; unless the waste streams/IDCs have been evaluated for compatibility concerns for that treatment process, and any appropriate precautions are implemented to ensure safe treatment.
- Containers of caustics shall not be commingled/treated together with containers of acids; unless the waste streams/IDCs have been evaluated for compatibility concerns and any appropriate precautions are implemented to ensure safe treatment.
- Containers with unknown waste shall not be comingled with any other waste stream/IDC.

Eight IDCs have insufficient analytical data and therefore can not be added to Figure 1. However, based on process knowledge these IDCs have been grouped with similar IDCs and given similar RGNs.

IDC BN-526 (Sample Returns), and BN-603 (Absorbed Analytical Liquids), will be grouped with the halogenated organics (RGN 17), which includes IDCs RF-003, -700, and -801. These three IDCs have been given an RGN of 17 due to the halogenated organics that were identified in analytical results or because of their potential to have halogenated organics due to the processes they were associated with.

IDC SD-703 (Inorganic Sludge), -704 (Organic Sludge), -705 (Debris), -706 (Soil) will also be placed in the halogenated organic (RGN 17) profile. These four IDCs have been given a list of possible constituents from historical and process knowledge data. The constituents may or may not be in the waste stream. As a conservative approach we will consider them as actual constituents. Almost half of the RGNs for these IDCs are an RGN 17.

IDC BN-701 (Mixed Low-Level Waste) and IDC ID-175 (DRCT Scrap Metal Waste from TAN [ROW]) can be added to the general population, due to the lack of acids, caustics, oxidizers and halogenated organics.

Figure 3 is a summary of all of the IDCs that provides a reference that can be used to quickly check an IDC to see if there are incompatibilities. This summary includes IDCs that are considered unknown waste. These IDCs are required to be managed as specified above based upon the operation being performed (e.g., storage, treatment).

Table 2. Potential incompatible RGNs.

Reactivity Type	RGN	Reactivity Group Name	Item Description Code
Oxidizers/Acids	2	Acids, Mineral, Oxidizing	INEEL-150: Laboratory Waste (128 drums) Mound-805: Asbestos Filters (38 drums) Mound-813: Glass Filters and Fiberglass (3 drums) Mound-834: High Level Acid (901 drums) RFP-241: Americium Process Residue (278 drums)
	104	Oxidizing Agents, Strong	ANLE-100: General Plant Waste (340 bins) Mound-805: Asbestos Filters (38 drums) Mound-811: Evaporator and Dissolver Sludge (4 drums) Mound-813: Glass Filters and Fiberglass (3 drums) Mound-834: High Level Acid (901 drums) RFP-005: Evaporated Salts (23 drums, 1 box) RFP-241: Americium Process Residue (278 drums) RFP-430: Resin, Ion Column-Unleached (55 drums)
Caustics	10	Caustics	Mound-835: High Level Caustic (1,675 drums) Mound-836: High Level Sludge/Cement (4,178 drums)
Organics	17	Halogenated Organics	RFP-003: Organic Setups, Oil Solids (8,843 drums; 24 boxes) RFP-700: OASIS Waste (60 drums) RFP-801: Solidified Organics (792 drums, 1 box) BN-526: Sample Returns BN-603: Absorbed Analytical Liquids SD 703: Inorganic Sludge SD 704: Organic Sludge SD 705: Debris SD 706: Soil

Table 3. Potential reaction consequences between oxidizers, acids, caustics, and organics.

RGN Combination	Adverse Reactions and Consequences	Reaction Code
2 + 10	The neutralization reaction can be violent with evolution of much heat.	H
2 + 17	These acids can cause oxidation and decomposition of halogenated organics resulting in heat and generation of extremely toxic fumes of hydrogen chloride, phosgene, and other gaseous halogenated compounds.	H, GT, P
10 + 17	Aliphatic halides can undergo substitution or dehydrohalogenation upon treatment with strong caustics. Both processes involve some heat generation while the second evolves flammable olefins and acetylenes, especially with the lower molecular weight compounds. Halogenated aromatics, however, are relatively stable to strong caustics.	H, GF
17 + 104	Halogenated organics can be easily oxidized by these compounds yielding heat and toxic and corrosive hydrogen halide fumes.	GT, H

Reaction Codes:

H—Heat generation, GF—Flammable gas generation, GT—Toxic gas generation, P—Violent polymerization

4.0 REFERENCES

The following references have been used to perform the compatibility evaluation and to compile the necessary waste descriptions, AK, and analytical data. References that are cited in the "Reference" column of Figure 1 are shown below with the citation abbreviations in and parentheses.

(1) 40 CFR 264.17, General Requirements for Ignitable, Reactive, or Incompatible Wastes

(2) Clements, Jr., T. L., Content Code Assessments for INEL Contact-Handled Transuranic Wastes, WM F1-82-021

(3) Count of Containers by IDC and Container Type, TCR2177, Report run October 25, 2001 against TRIPS.

(4) EDF-RWMC-369, Hazardous Waste Constituents of INEL Contact-Handled Stored Transuranic Waste

(5) EDF-RWMC-413, Chemical Compatibility of Stored TRU Mixed Waste

(6) EDF-RWMC-421, EPA Hazardous Waste Codes Found in INEL Stored TRU Waste Content Codes

(7) EDF-RWMC-803, Chemical Constituents in Transuranic Storage Area (TSA) Waste, Rev. 7, December 2002.

(8) EPA-600/2-80-076, U.S. Environmental Protection Agency, A Method for Determining the Compatibility of Hazardous Wastes

(9) INEL-95/0281, Idaho National Engineering Laboratory Code Assessment of the Rocky Flats Transuranic Waste

(10) INEL-95/0412, Waste Description Information for Transuranically-Contaminated Wastes Stored at the Idaho National Engineering Laboratory

(11) INEL-96/0280, Acceptable Knowledge Document for INEEL Stored Transuranic Waste—Rocky Flats Plant Waste

(12) RPT-TRUW-12, AMWTP Waste Stream Designations

(13) Wastren, Inc., Building JN-4 Plutonium Laboratory Acceptable Knowledge Document, TCP 98 04

5.0 FIGURES

Figure 1. AMWTP Storage Treatment Comprehensive Hazardous Waste Compatibility Chart

Figure 2. AMWTP Specific Storage/Treatment Compatibility Chart

Figure 3. AMWTP Compatibility Summary by IDC References

Figure 1. AMWTP Storage Treatment Comprehensive Hazardous Waste Compatibility Chart.

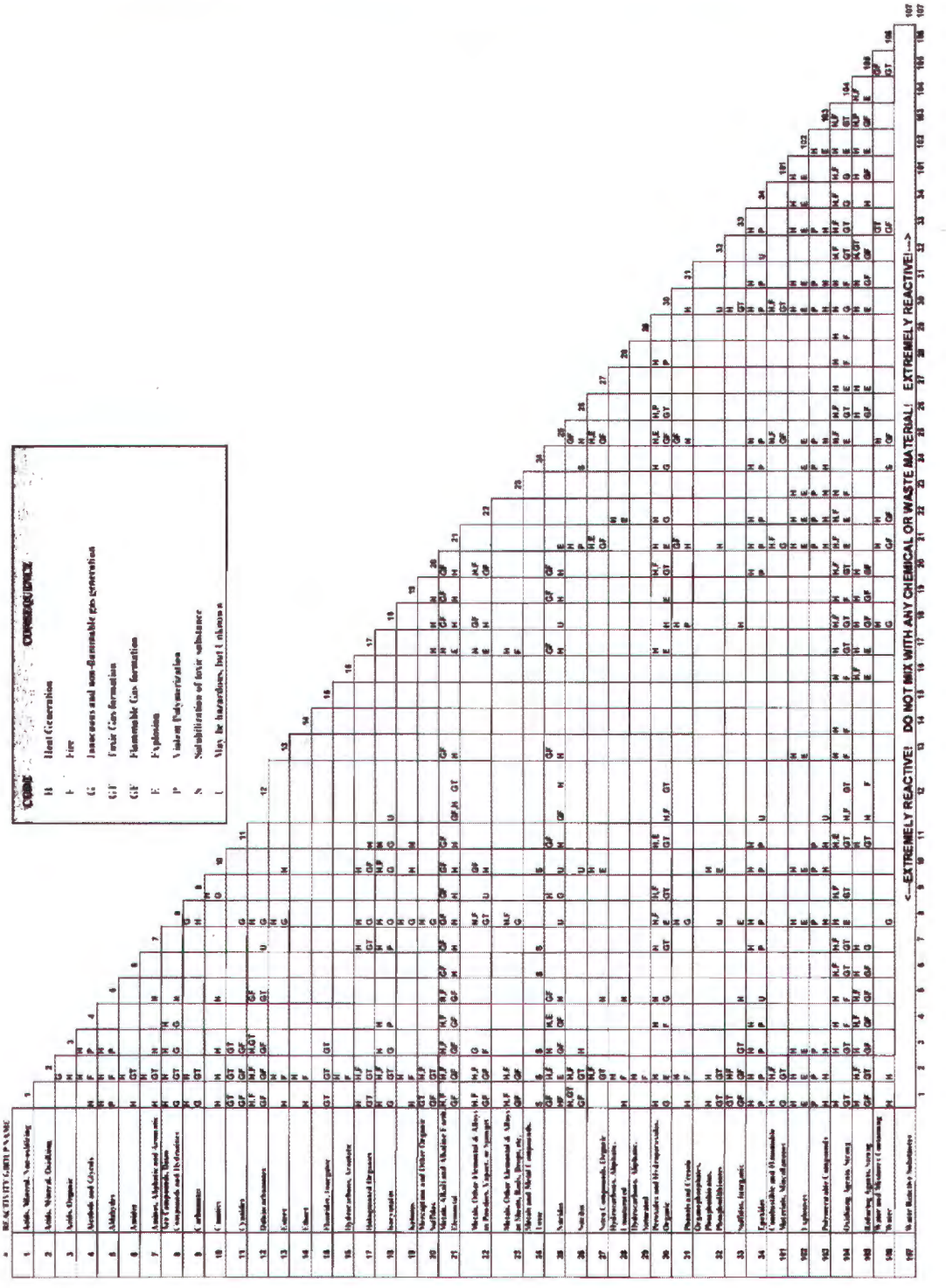

Figure 2. AMWTP Specific Storage/Treatment Compatibility Chart.

IDCs	Reactivity Group No.	Reactivity Group Name				
INEEL: 150 RFP: 241 Mound: 805, 813, 834	2	Acids, Mineral, Oxidizing	2			
Mound: 835, 836	10	Caustics	14	H		
RFP: 003, 700, 801	17	Halogenated Organics	H, GT, P	H, GF	17	
ANL-E: 100 Mound: 805, 811, 513, 834 RFP: 005, 241, 430	104	Oxidizing			GT, H	104
			2	10	17	104

Reaction Code Consequences

H – Heat Generation
GF – Flammable Gas Generation
GT – Toxic Gas Generation
P – Violent Polymerization

HWNs	ANL-E	IDC Description	Drums	Boxes	Bins	Total
D001, F003 (EDF-803)	100	General Plant Waste			340	340
	INEEL					
D002, D008 (EDF-803)	150	Laboratory Waste	128			128
	Mound					
D001, D002, D009	805	Asbestos Filters	38			38
D001, D009	811	Evaporator and Dissolver Sludge	4			4
D001, D002, D009	813	Glass Filters and Fiberglass	3			3
D001, D002	834	High Level Acid	901			901
D002	835	High Level Caustic	1675			1675
D002, D006-D011, F001-F003	836	High Level Sludge/Cement	4178			4178
	RFP					
D005, D011, D022, D029, D036, F001-F003, F005, PCBs	003	Organic Setups, Oil Solids	8843	24		8867
D001	005	Evaporated Salts	23	1		24
D001, D002, D008, F002, F003	241	Americium Process Residue	278			278
D001	430	Resin, Ion Column-Unleashed	55			55
D022, F001-F003	700	Organic and Sludge Immobilization System (OASIS) Waste	60			60
D022, F001-F003	801	Solidified Organics	792	1		793
				TOTAL:		17,344

Figure 3. AMWTP Compatibility Summary by IDC References.

IDC	IDC Description	Compat	Incompat	Unk	Notes
000	Not Recorded - Unknown			X	
001	First Stage Sludge (MW)	X			
002	Second Stage Sludge (MW)	X			
003	Organic Setups, Oil Solids (MW)		X		Halogenated Organic
004	Special Setups (Cement) (MW)	X			
005	Evaporated Salts (MW)		X		Oxidizer
007	Bldg 374 Dry Sludge (MW)	X			
010	Combustibles (rags, gloves, poly) (MW)	X			
020	Noncompressible, Noncombustible (MW)	X			
021	Radioactive Mixes Lead Waste (MW)	X			
030	Solidified Grinding Sludge, etc. (MW)	X			
040	Solid Binary Scrap Powder, etc. (ROW)	X			
050	Solidified Solutions (ROW)	X			
081	Metal Samples Fissile (ROW)	X			
090	Dirt (MW)	X			
095	Pond Sludge			X	
100	General Plant Waste (MW)		X		Oxidizer
101	Cut Up Gloveboxes (MW)	X			
102	Absorbed Liquids (MW)	X			
104	Alpha-Gamma Hot Cells Facility Waste (ROW)	X			
105	Empty Bottles and Absorbent (MW)			X	
106	Special Source Material			X	
107	Alpha Hot Cell Waste (ROW)	X			
110	Research Generated Waste			X	
111	Miscellaneous Source Material (ROW)	X			
120	Decontamination and Decommissioning Compactible and Combustible Solids			X	
121	TRU Organic Solid Waste			X	
142	Scrap Processing Equipment (ROW)	X			
150	Laboratory Waste (MW)		X		Acid
151	Solidified Fuel Sludge			X	
152	Plutonium Neutron Sources (ROW)	X			
153	Combustible Lab Waste (ROW)	X			
154	Sample Fuel (ROW)	X			
155	TRU Scrap (ROW)	X			
156	Chem Cell Rip-out (UNK)			X	
157	Miscellaneous Sources (MW)	X			
160	ANL-W HFEF Analytical Chemistry and Metallographic Combustibles. (ROW)	X			
161	ANL-W Analytical Chemistry Lab Glassware (ROW)	X			
162	ANL-W FMF EFL Zr-U Fuel Casting Alloys Residues (ROW)	X			
163	ANL-W ACL Cold-line Absorbed Liquid, Misc. Hardware, Polyethylene (ROW)	X			
164	WIPP Experimental Test Program Process Waste (MW)	X			
175	DRCT Scrap Metal Waste From TAN			X	
201	Noncombustible Solids (MW)	X			
202	Combustible Solids, Paper, Cloth (MW)	X			
203	Paper, Cloth, Metals, Glass (MW)	X			
204	Solidified Solutions (MW)	X			
241	Americium Process Residue (MW)		X		Acid
290	Filter and Off-Gas Sludge (MW)	X			
292	Cemented Sludge (MW)	X			
300	Graphite Molds (MW)	X			
301	Graphite Cores (MW)	X			
302	Benelex and Plexiglas (MW)	X			
303	Scarfed Graphite Chunks (MW)	X			
310	Graphite Scarfings (ROW)	X			
311	Graphite Heels (ROW, per RPT-12)	X			
312	Graphite, Course (MW)	X			
320	Heavy Non-SS (Special Source) Metals, (Ta, W, PL, Pb) (MW)	X			
321	Lead (MW)	X			
328	Filters, Full-Flo, from Incinerator	X			
330	Paper and Rags-Dry (MW)	X			
335	Absolute 8 × 8 Filters (MW)	X			

Chemical Compatibility Evaluation of Wastes for the Advanced Mixed Waste Treatment Project

IDC	IDC Description	Compat	Incompat	Unk	Notes
336	Moist Paper and Tags (MW)	X			
337	Plastic, Teflon, Wash, PVC, Retrieved RF TRU (MW)			X	
338	RWMC Lead Shielded Overpack: Empty (UNK)			X	
339	Leaded Rubber Gloves and Aprons (MW)	X			
33A	A mixture of waste characterized with IDC Codes 335, 336, 337, and 339 (MW)	X			
33B	A mixture of waste characterized with IDC Codes 330, 337, and 339 (MW)	X			
360	Insulation (MW)	X			
361	Insulation Heel (MW)	X			
368	MgO Ceramic Crucibles – Not LECO (ROW)	X			
370	LECO Crucibles (ROW)	X			
371	Firebrick (MW)	X			
372	Grit (ROW)	X			
374	Blacktop, Concrete, Dirt, and Sand	X			
375	Oil-Dri Residues from Incinerator (MW)	X			
376	Cemented Insulation and Filter Media (MW)	X			
377	Course Firebrick (MW)	X			
391	Crucibles and Sand (ROW)	X			
392	Sand, Slag, and Crucibles (ROW)	X			
393	Sand, Slag, and Crucible Heels (MW)	X			
409	Molten Salts, 30% Unpulverized (ROW)	X			
410	Molten Salts, 30% Pulverized (MW)	X			
411	Electrorefining Salt (ROW)	X			
412	Gibson Salts (ROW)	X			
414	Direct Oxide Reduction Salt (ROW)	X			
416	Zinc-Magnesium Alloy Metal (ROW)	X			
420	Ash, Incinerator (Virgin) (MW)	X			
421	Heels, Ash (>2% G/G) (MW)	X			
422	Soot (MW)	X			
425	Fluid Bed Ash (MW)	X			
430	Resin, Ion Column-Unleashed (MW)		X		Oxidizer
431	Resin, Leashed (ROW)	X			
432	Resin, Leached and Cemented (MW)	X			
440	Glass (MW)	X			
441	Unleashed Raschig Rings (MW)	X			
442	Leashed Raschig Rings (MW)	X			
44A	A mixture of waste characterized with IDC Codes 440 and 442 (MW)	X			
460	Washables, Rubber, Plastics (MW)	X			
463	Gloves, Drybox/Leaded Rubber Gloves and Aprons (MW)	X			
464	Benelex and Plexiglas (MW)	X			
480	Unleashed Light Non-Special Source Metal-Fe, Cu, Al, Stainless, etc. (MW)	X			
481	Leached Nonspecial Source Metal (MW)	X			
488	Glovebox Parts with Lead (MW)	X			
48A	A mixture of waste characterized with IDC Codes 480 and 481 (MW)	X			
490	Chemical Warfare Service Filters (MW)	X			
491	Plenum Prefilters (MW)	X			
515	Plastics, Paper, Cloth, etc. (ROW)	X			
516	Steel, Al, Electrical Devices-Handheld (ROW)	X			
517	Heavy Metals, Steel, Al, Brass (ROW)	X			
530	Compacted Waste (ROW)	X			
535	Compacted Waste/Lead (ROW)	X			
540	Noncompacted Waste (ROW)	X			
545	WEP Shielded Waste (ROW)	X			
550	Solidified Oil (ROW)	X			
601	Alpha Low Level Lav. WIPP Analytical Waste (MW)	X			
700	Organic and Sludge Immobilization System (OASIS) Waste (MW)		X		Halogenated Organic
800	Solidified Sludge Bldg. 774 (MW)	X			
801	Rags, Paper, Wood, etc. (ROW)		X		Halogenated Organic
802	Solidified Lab Waste (MW)	X			
803	Metal, Equipment, Pipes, Valves, etc. (MW)	X			
803	Metal, Equipment, Pipes, Valves, etc. (MW)	X			
804	Plastic, Tygon, Manipulator Boots, etc. (MW)	X			
805	Asbestos Filters (MW)		X		Acid
806	Solidified Process Solids (MW)	X			

Advanced Mixed Waste Treatment Project

Chemical Compatibility Evaluation of Wastes for the Advanced Mixed Waste Treatment Project

IDC	IDC Description	Compat	Incompat	Unk	Notes
807a	Solidified Bypass Sludge, Bldg. 374, After 3/87 (MW)	X			
807b	Cemented Incinerator Sludge, Bldg. 771, Prior to 4/87 (MW)	X			
810	Glass, Flasks, Sample Vials, etc. (MW)	X			
811	Evaporator and Dissolver Sludge (MW)		X		Oxidizer
812				X	
813	Glass Filters and Fiberglass (MW)		X		Oxidizer
814	Contaminated Mercury and Graphite Crucible (MW)	X			
815	Classified parts (MW)	X			
817	Cemented Sand, Slag, & Crucible Heels (MW)	X			
818	Cemented Incinerator Ash (MW)	X			
820	Cemented Soot (MW)	X			
823	Cemented Miscellaneous Sludge (MW)	X			
824	Non-compressible/Noncombustible Equipment Boxes (MW)	X			
825	Equipment Drums, Noncombustible (MW)	X			
826	Combustible Equipment Boxes, Rust and Floor Sweepings (ROW)	X			
827	Solid Trash and Dry Laboratory Material (ROW)	X			
831	Dry Combustibles TRU Mixed (MW)	X			
832	Wet Combustibles TRU Mixed (MW)			X	
833	Plastics TRU Mixed (MW)	X			
834	High Level Acid (MW)		X		Acid
835	High Level Caustic (MW)		X		Caustic
836	High Level Sludge/Cement (MW)		X		Caustic
838	LSA<100 nCi/g Noncombustible (UNK)			X	
842	Contaminated Soil (MW)	X			
847	LSA <100 nCi/g Combustible (MW)	X			
848	LSA<100 nCi/g Noncombustible (MW)	X			
900	Low Specific Activity Plastics, Paper, etc. (MW)	X			
950	Low Specific Activity Metal, Glass, etc. (MW)	X			
960	Concrete, Asphalt, etc. (MW)	X			
970	Wood (MW)	X			
976	Building 776 Process Sludge (MW)	X			
978	Laundry Sludge (MW)	X			
980	Equipment (May contain sludge) (MW)	X			
990	Dirt (MW)	X			
995	Sludge (ROW)	X			

Attachment 1
AMWTP Hazardous Waste RGN Compatibility Determinations for Storage/Treatment

IDC	IDC Description	Generator	References	Constituent	RGN 1	RGN 2	RGN 3	RGN USED	RGN STRG	RGN TTMT	Est. conc. (wt%)	Notes	HWNo (RPT-12, except where noted)
000	Not Recorded - Unknown	INEEL, RFP	CLM	Waste Description: Unavailable. Waste includes unlabeled containers retrieved from the TSA-RE that will be similar to known wastes/IDCs.	Unkn	Unkn	Unkn	Unkn	Unkn	Unkn			Unknown
001	First Stage Sludge (MW)	RFP	13, 280, 413, 803-Rev7	Acid	2			2	0	0		NaOH was added to make sludge basic. Free liquid pH = 8 to 12, and does not qualify as corrosive in INEL-96/0280 or RPT-12. (However, it is still listed as a D002 corrosive waste in EDF-803.)	D001-D011, D022, F001, F002, F005-F007, F009
001	First Stage Sludge (MW)	RFP	CLM	Aluminum Oxide = Al2O3	24			24	0	0			
001	First Stage Sludge (MW)	RFP	280, 803-Rev7	Arsenic = As	24			24	0	0	0.01	Mean 1st and 2nd stage sludge solids analytical data.	
001	First Stage Sludge (MW)	RFP	280, 803-Rev7, RAV	Barium = Ba	21	24	107	24	0	0	0.004	Mean 1st and 2nd stage sludge solids analytical data.	
001	First Stage Sludge (MW)	RFP	280, 803-Rev7	Benzene	16			16	0	0	5.00E-05	Mean 1st and 2nd stage sludge solids analytical data.	
001	First Stage Sludge (MW)	RFP	803-Rev7, CLM	Beryllium = Be	24			24	0	0			
001	First Stage Sludge (MW)	RFP	280, 368, 413, 421, 803-Rev7, RAV	Butanol = Butyl Alcohol = C4H9OH	4			4	0	0	2 ppmv	Mean 1st and 2nd stage sludge HSG analytical data.	
001	First Stage Sludge (MW)	RFP	280, 368, 413, 421, 803-Rev7, RAV	Cadmium = Cd	23	24		24	0	0	0.001	Mean 1st and 2nd stage sludge solids analytical data.	
001	First Stage Sludge (MW)	RFP	CLM	Calcium Chloride = CaCl2	24			24	0	0			
001	First Stage Sludge (MW)	RFP	280, 368, 413, 421, 803-Rev7, RAV	Carbon Tetrachloride = CCl4 = Tetrachloromethane	17			17	0	0	7.00E-05	Mean 1st and 2nd stage sludge solids analytical data.	
001	First Stage Sludge (MW)	RFP	280, 803-Rev7	Chlorobenzene	17			17	0	0	6.00E-05	Mean 1st and 2nd stage sludge solids analytical data.	
001	First Stage Sludge (MW)	RFP	280, 803-Rev7, RAV	Chloroform = Trichloromethane	17			17	0	0	5.00E-05	Mean 1st and 2nd stage sludge solids analytical data.	
001	First Stage Sludge (MW)	RFP	280, 803-Rev7, RAV	Chromium = Cr	23	24		24	0	0	0.02	Mean 1st and 2nd stage sludge solids analytical data.	
001	First Stage Sludge (MW)	RFP	280, 803-Rev7	Cyanide cleaning bath solutions	11			11	0	0		Note for RGN: See INEL-96/0280 Acceptable Knowledge - The cyanide concentrations should be at trace levels and should not cause the waste to be reactive.	
001	First Stage Sludge (MW)	RFP	280, 803-Rev7	Cyanide plating bath solutions	11			11	0	0		Note for RGN: See INEL-96/0280 Acceptable Knowledge - The cyanide concentrations should be at trace levels and should not cause the waste to be reactive.	
001	First Stage Sludge (MW)	RFP	280, RAV	Dichloroethane, 1,2- = (Ethylene dichloride)	17			17	0	0	5.00E-05	Mean 1st and 2nd stage sludge solids analytical data.	
001	First Stage Sludge (MW)	RFP	280, 803-Rev7	Dichloroethene, 1,2- = (Dichloroethylene)	17			17	0	0	0.2 ppmv	Mean 1st and 2nd stage sludge HSG analytical data.	
001	First Stage Sludge (MW)	RFP	280, 803-Rev7	Ethyl benzene = Phenylethane	16			16	0	0	1 ppmv	Mean 1st and 2nd stage sludge HSG analytical data.	
001	First Stage Sludge (MW)	RFP	CLM	Ferric Sulfate = Fe2(SO4)3nH2O = Iron Persulfate	24			24	0	0			
001	First Stage Sludge (MW)	RFP	280, 368, 413, 421, 803-Rev7, RAV	Freon = 1,1,2-Trichloro-1,2,2-Trifluoroethane	17			17	0	0	33 ppmv	Mean 1st and 2nd stage sludge HSG analytical data.	
001	First Stage Sludge (MW)	RFP	CLM	Iron Oxide = Fe2O	24			24	0	0			
001	First Stage Sludge (MW)	RFP	280, 368, 413, 421, 803-Rev7, CLM, RAV	Lead = Pb	23	24		24	0	0	0.02	Mean 1st and 2nd stage sludge solids analytical data.	
001	First Stage Sludge (MW)	RFP	CLM	Magnesium Oxide = MgO = Periclase	24			24	0	0			
001	First Stage Sludge (MW)	RFP	CLM	Magnesium Sulfate = MgSO4	24			24	0	0			
001	First Stage Sludge (MW)	RFP	280, 803-Rev7, RAV	Mercury = Hg	24			24	0	0	1.00E-04	Mean 1st and 2nd stage sludge solids analytical data.	
001	First Stage Sludge (MW)	RFP	280, 368, 413, 421, 803-Rev7, RAV	Methanol = Methyl Alcohol = CH3OH	4			4	0	0	6 ppmv	Mean 1st and 2nd stage sludge HSG analytical data.	
001	First Stage Sludge (MW)	RFP	280, 368, 413, 421, 803-Rev7, RAV	Methylene Chloride = CHCl2 = Dichloromethane	17			17	0	0	2 ppmv	Mean 1st and 2nd stage sludge HSG analytical data.	
001	First Stage Sludge (MW)	RFP	803-Rev7	Nickel = Ni	22	24		24	0	0			
001	First Stage Sludge (MW)	RFP	CLM	Oil-Qil	0			0	0	0		Used until Feb. 1982	
001	First Stage Sludge (MW)	RFP	280, 803-Rev7, RAV	Perclene = Perchloroethylene = Tetrachloroethene, 1,1,2,2-	17			17	0	0	8.00E-05	Mean 1st and 2nd stage sludge solids analytical data.	
001	First Stage Sludge (MW)	RFP	CLM	Portland Cement	0			0	0	0		To absorb free liquids.	
001	First Stage Sludge (MW)	RFP	280, 803-Rev7	Selenium = Se	22	23	24	24	0	0	7.00E-05	Mean 1st and 2nd stage sludge solids analytical data.	
001	First Stage Sludge (MW)	RFP	CLM	Silicon Oxide = SiOx	24			24	0	0			
001	First Stage Sludge (MW)	RFP	280, 803-Rev7, RAV	Silver = Ag	24			24	0	0	0.01	Mean 1st and 2nd stage sludge solids analytical data.	
001	First Stage Sludge (MW)	RFP	13, 280, 803-Rev7, CLM, RAV	Sodium Hydroxide = NaOH = Caustic soda = Lye	10			10	0	0		Note for RGN: See INEL-96/0280. Free liquid pH = 8 to 12, and does not qualify as corrosive in this report or RPT-12. (However, it is still listed as a D002 corrosive waste in EDF-803.)	
001	First Stage Sludge (MW)	RFP	280, 803-Rev7	Tetrachloroethane, 1,1,2,2-	17			17	0	0	0.1 ppmv	Mean 1st and 2nd stage sludge HSG analytical data.	
001	First Stage Sludge (MW)	RFP	280, 803-Rev7	Toluene = Toluol = Methylbenzene	16			16	0	0	9 ppmv	Mean 1st and 2nd stage sludge HSG analytical data.	
001	First Stage Sludge (MW)	RFP	280, 368, 413, 421, 803-Rev7, RAV	Trichloroethane, 1,1,1- = TCA	17			17	0	0	87 ppmv	Mean 1st and 2nd stage sludge HSG analytical data.	
001	First Stage Sludge (MW)	RFP	803-Rev7	Trichloroethane, 1,1,2-	17			17	0	0		Assumed to be low based on trace quantities of the more commonly used solvents in IDCs 001/002.	
001	First Stage Sludge (MW)	RFP	280, 803-Rev7, RAV	Trichloroethylene = Trichloroethene = TCE	17			17	0	0	2.00E-04	Mean 1st and 2nd stage sludge solids analytical data.	

001	First Stage Sludge (MW)	RFP	CLM	Vermiculite	0			0	0	0		Used since Feb. 1982	
001	First Stage Sludge (MW)	RFP	CLM	Waste Description: Ion exchange column effluent, distillates, caustic scrub solutions. Since 1979: First and second stages were combined. First stage and second stage sludge. Since 1979: First and second stages were combined.	N/A	N/A	N/A	N/A	N/A	N/A			
001	First Stage Sludge (MW)	RFP	280, 369, 413, 421, 803-Rev7, RAV	Xylene = C6H4(CH3)2 = Dimethyl benzene	18			18	0	0	3 ppmw	Mean 1st and 2nd stage sludge HSG analytical data.	
002	Second-Stage Sludge (MW)	RFP	12, 280, 413, 803-Rev7	Acid	2			2	0	0		NaOH was added to make sludge basic. Free liquid pH = 8 to 12, and does not qualify as corrosive in INEL-96/0280 or RPT-12. (However, it is still listed as a D002 corrosive waste in EDF-803.)	D004-D011, D022, F001, F002, F005-F007, F009
002	Second-Stage Sludge (MW)	RFP	CLM	Aluminum Oxide = Al2O3	24			24	0	0			
002	Second-Stage Sludge (MW)	RFP	280, 803-Rev7	Arsenic = As	24			24	0	0	0.01	Mean 1st and 2nd stage sludge solids analytical data.	
002	Second-Stage Sludge (MW)	RFP	280, 803-Rev7, RAV	Barium = Ba	21	24	197	24	0	0	0.904	Mean 1st and 2nd stage sludge solids analytical data.	
002	Second-Stage Sludge (MW)	RFP	280, 803-Rev7	Benzene	16			16	0	0	5.00E-05	New constituent identified (per EDF-803, Rev 7). Mean 1st and 2nd stage sludge solids analytical data.	
002	Second-Stage Sludge (MW)	RFP	803-Rev7	Beryllium = Be	24			24	0	0			
002	Second-Stage Sludge (MW)	RFP	280, 369, 413, 421, 803-Rev7 RAV	Butanol = Butyl Alcohol = C4H9OH	4			4	0	0	2 ppmw	Mean 1st and 2nd stage sludge HSG analytical data.	
002	Second-Stage Sludge (MW)	RFP	280, 369, 413, 421, 803-Rev7, RAV	Cadmium = Cd	23	24		24	0	0	0.001	Mean 1st and 2nd stage sludge solids analytical data.	
002	Second-Stage Sludge (MW)	RFP	CLM	Calcium Chloride = CaCl2	24			24	0	0			
002	Second-Stage Sludge (MW)	RFP	280, 369, 413, 421, 803-Rev7, RAV	Carbon Tetrachloride = CCH = Tetrachloromethane	17			17	0	0	7.00E-05	Mean 1st and 2nd stage sludge solids analytical data.	
002	Second-Stage Sludge (MW)	RFP	280, 803-Rev7	Chlorobenzene	17			17	0	0	5.00E-05	Mean 1st and 2nd stage sludge solids analytical data.	
002	Second-Stage Sludge (MW)	RFP	280, 803-Rev7, RAV	Chloroform = Trichloromethane	17			17	0	0	5.00E-05	Mean 1st and 2nd stage sludge solids analytical data.	
002	Second-Stage Sludge (MW)	RFP	280, 803-Rev7, RAV	Chromium = Cr	23	24		24	0	0	0.02	Mean 1st and 2nd stage sludge solids analytical data.	
002	Second-Stage Sludge (MW)	RFP	280, 803-Rev7	Cyanide cleaning bath solutions	11			11	0	0		Note for RGN: See INEL-96/0280 Acceptable Knowledge - The cyanide concentrations should be at trace levels and should not cause the waste to be reactive.	
002	Second-Stage Sludge (MW)	RFP	280, 803-Rev7	Cyanide plating bath solutions	11			11	0	0		Note for RGN: See INEL-96/0280 Acceptable Knowledge - The cyanide concentrations should be at trace levels and should not cause the waste to be reactive.	
002	Second-Stage Sludge (MW)	RFP	280, 803-Rev7	Dichloroethane, 1,2- = (Ethylene dichloride)	17			17	0	0	5.00E-05	Mean 1st and 2nd stage sludge solids analytical data.	
002	Second-Stage Sludge (MW)	RFP	280, 803-Rev7	Dichloroethene, 1,2- = (Dichloroethylene)	17			17	0	0	0.2 ppmw	Mean 1st and 2nd stage sludge HSG analytical data.	
002	Second-Stage Sludge (MW)	RFP	280, 803-Rev7	Ethyl benzene = Phenylethane	16			16	0	0	1 ppmw	Mean 1st and 2nd stage sludge HSG analytical data.	
002	Second-Stage Sludge (MW)	RFP	CLM	Ferric Sulfate = Fe2(SO4)3xH2O = Iron Persulfate	24			24	0	0			
002	Second-Stage Sludge (MW)	RFP	280, 369, 413, 421, 803-Rev7, RAV	Freon = 1,1,2-Trichloro-1,2,2-Trifluoroethane	17			17	0	0	33 ppmw	Mean 1st and 2nd stage sludge HSG analytical data.	
002	Second-Stage Sludge (MW)	RFP	CLM	Iron Oxide = Fe2O	24			24	0	0			
002	Second-Stage Sludge (MW)	RFP	280, 369, 413, 421, 803-Rev7, RAV	Lead = Pb	23	24		24	0	0	0.02	Mean 1st and 2nd stage sludge solids analytical data.	
002	Second-Stage Sludge (MW)	RFP	369, 413, 803-Rev7, CLM	Lithium = Li	21	107		21	0	0		Note for RGN: See NOD Response to EPA ID#890008952 - EPA guidance on lithium batteries indicates a fully discharged lithium-sulfer dioxide battery is unlikely to exhibit the characteristic of reactivity...little reason to expect large quantities are present... or that batteries would retain an electrical charge.	
002	Second-Stage Sludge (MW)	RFP	CLM	Magnesium Oxide = MgO = Periclase	24			24	0	0			
002	Second-Stage Sludge (MW)	RFP	CLM	Magnesium Sulfate = MgSO4	24			24	0	0			
002	Second-Stage Sludge (MW)	RFP	280, 369, 413, 421, 803-Rev7, CLM, RAV	Mercury = Hg	24			24	0	0	1.00E-04	Mean 1st and 2nd stage sludge solids analytical results.	
002	Second-Stage Sludge (MW)	RFP	280, 369, 413, 421, 803-Rev7, RAV	Methanol = Methyl Alcohol = CH3OH	4			4	0	0	6 ppmw	Mean 1st and 2nd stage sludge HSG analytical data.	
002	Second-Stage Sludge (MW)	RFP	280, 369, 413, 421, 803-Rev7, RAV	Methylene Chloride = CH2Cl2 = Dichloromethane	17			17	0	0	2 ppmw	Mean 1st and 2nd stage sludge HSG analytical data.	
002	Second-Stage Sludge (MW)	RFP	CLM	Oil-Dri	0			0	0	0			
002	Second-Stage Sludge (MW)	RFP	280, 803-Rev7, RAV	Perclene = Perchloroethylene = Tetrachloroethane, 1,1,2,2-	17			17	0	0	5.00E-05	Mean 1st and 2nd stage sludge solids analytical data.	
002	Second-Stage Sludge (MW)	RFP	CLM	Portland Cement	0			0	0	0		To absorb free liquids	
002	Second-Stage Sludge (MW)	RFP	280, 803-Rev7	Selenium = Se	22	23	24	24	0	0	7.90E-05	Mean 1st and 2nd stage sludge solids analytical data.	
002	Second-Stage Sludge (MW)	RFP	CLM	Silicon Oxide = SiOx	24			24	0	0			
002	Second-Stage Sludge (MW)	RFP	280, 803-Rev7, RAV	Silver = Ag	24			24	0	0	0.01	Mean 1st and 2nd stage sludge solids analytical data.	
002	Second-Stage Sludge (MW)	RFP	12, 280, 803-Rev7, CLM, RAV	Sodium Hydroxide = NaOH = Caustic soda = Lye	10			10	0	0		Note for RGN: See INEL 96/0280: Free liquid pH = 8 to 12, and does not qualify as corrosive in this report or RPT-12. (However, it is still listed as a D002 corrosive waste in EDF-803.)	

002	Second-Stage Sludge (MW)	RFP	280, 803-Rev7	Tetrachloroethane, 1,1,2,2-	17			17	0	0	0.1 ppmv	Mean 1st and 2nd stage sludge HSG analytical data.	
002	Second-Stage Sludge (MW)	RFP	280, 803-Rev7	Toluene = Toluol = Methylbenzene	18			18	0	0	9 ppmv	Mean 1st and 2nd stage sludge HSG analytical data.	
002	Second-Stage Sludge (MW)	RFP	280, 369, 413, 421, 803-Rev7, RAV	Trichloroethane, 1,1,1- = TCA	17			17	0	0	87 ppmv	Mean 1st and 2nd stage sludge HSG analytical data.	
002	Second-Stage Sludge (MW)	RFP	803-Rev7	Trichloroethane, 1,1,2-	17			17	0	0		Assumed to be low based on trace quantities of the more commonly used solvents in IDCs 001/002	
002	Second-Stage Sludge (MW)	RFP	280, 803-Rev7, RAV	Trichloroethylene = Trichloroethene = TCE	17			17	0	0	2.00E-04	Mean 1st and 2nd stage sludge solids analytical data.	
002	Second-Stage Sludge (MW)	RFP	CLM	Waste Description: Effluent, motors, bottles of chemicals (usually liquid), mercury & lithium batteries, contaminated mercury in pint bottles, radioactive sources	N/A	N/A	N/A	N/A	N/A	N/A		Began combining 1st and 2nd stages fall, 1979. Content Code 002 no longer used. Portland cement added to absorb free liquid.	
002	Second-Stage Sludge (MW)	RFP	280, 369, 413, 421, 803-Rev7, RAV	Xylene = C6H4(CH3)2 = Dimethyl benzene	18			18	0	0	3 ppmv	Mean 1st and 2nd stage sludge HSG analytical data.	
003	Organic Setups, Oil Solids (MW)	RFP	280, 803-Rev7 RAV	Barium = Ba	21	24	107	24	0	0	0.008	Mean sludge solids analytical data.	D005, D011, D022, D029, D038, F001-F003, F005 PCBs
003	Organic Setups, Oil Solids (MW)	RFP	369, 413, 421, 803-Rev7, CLM	Beryllium = Be	24			24	0	0		Characteristic: Toxic	
003	Organic Setups, Oil Solids (MW)	RFP	CLM	Calcium Silicate (Microcel E) = Ca2SiO4	0			0	0	0		Treatment to make paste/grease	
003	Organic Setups, Oil Solids (MW)	RFP	280, 369, 413, 421, 803-Rev7, CLM, RAV	Carbon Tetrachloride = CCl4 = Tetrachloromethane	17			17	0	N/A	10	Mean sludge solids analytical data.	
003	Organic Setups, Oil Solids (MW)	RFP	280, 803-Rev7	Chloroform = Trichloromethane	17			17	0	0	0.05	Mean sludge solids analytical data.	
003	Organic Setups, Oil Solids (MW)	RFP	280, 803-Rev7	Dichloroethane, 1,1- = (Ethylene dichloride)	17			17	0	0	2 ppmv	Mean sludge HSG analytical data.	
003	Organic Setups, Oil Solids (MW)	RFP	280, 803-Rev7	Dichloroethene, 1,1- = Dichloroethylene, 1,1-	17			17	0	0	0.01	Mean sludge solids analytical data.	
003	Organic Setups, Oil Solids (MW)	RFP	280, 369, 421, 803-Rev7, CLM, RAV	Freon = 1,1,2-Trichloro-1,2,2-Trifluoroethane	17			17	0	N/A	2,000 ppmv	Mean sludge HSG analytical data.	
003	Organic Setups, Oil Solids (MW)	RFP	280, 421, 803-Rev7, RAV	Methylene Chloride = CH2Cl2 = Dichloromethane	17			17	0	0		See INEL-96/0280: Detected in historical HSG samples.	
003	Organic Setups, Oil Solids (MW)	RFP	280, 369, 413, 421, 803-Rev7 CLM, RAV	Nitrobenzene = C6H5NO2 = Nitrobenzol	27			27	0	0	8.00E-04	Mean sludge solids analytical data.	
003	Organic Setups, Oil Solids (MW)	RFP	CLM	Oil: Gearbox	101			101	0	0		Note for RGN: See EDF-413 - Since 003 contains relatively high concentrations of halogenated and aliphatic organics in paste-like material, it is prudent to segregate 003 from all other wastes with RGNs of 2, 10, or 104.	
003	Organic Setups, Oil Solids (MW)	RFP	CLM	Oil: Hydrolic	101			101	0	0		Note for RGN: See EDF-413 - Since 003 contains relatively high concentrations of halogenated and aliphatic organics in paste-like material, it is prudent to segregate 003 from all other wastes with RGNs of 2, 10, or 104.	
003	Organic Setups, Oil Solids (MW)	RFP	CLM	Oil: Machining	101			101	0	0		Note for RGN: See EDF-413 - Since 003 contains relatively high concentrations of halogenated and aliphatic organics in paste-like material, it is prudent to segregate 003 from all other wastes with RGNs of 2, 10, or 104.	
003	Organic Setups, Oil Solids (MW)	RFP	CLM	Oil: Spindle	101			101	0	0		Note for RGN: See EDF-413 - Since 003 contains relatively high concentrations of halogenated and aliphatic organics in paste-like material, it is prudent to segregate 003 from all other wastes with RGNs of 2, 10, or 104.	
003	Organic Setups, Oil Solids (MW)	RFP	CLM	Oil: Texaco Regal	101			101	0	0		Note for RGN: See EDF-413 - Since 003 contains relatively high concentrations of halogenated and aliphatic organics in paste-like material, it is prudent to segregate 003 from all other wastes with RGNs of 2, 10, or 104.	
003	Organic Setups, Oil Solids (MW)	RFP	CLM	Oil-Dri	0			0	0	0			
003	Organic Setups, Oil Solids (MW)	RFP	CLM	Organophosphates	32			32	0	0			
003	Organic Setups, Oil Solids (MW)	RFP	280, 369, 413, 421, 803-Rev7, CLM, RAV	Perclene = Perchloroethylene = Tetrachloroethene, 1,1,2,2-	17			17	0	0	0.003	Mean sludge solids analytical data.	
003	Organic Setups, Oil Solids (MW)	RFP	280, 369, 421, 803-Rev7, CLM, RAV	Polychlorinated Biphenyls = PCBs	17			17	0	N/A	15	Note for RGN: See INEL-96/0280 Acceptable Knowledge - PCBs > 50 ppm through late 1984.	
003	Organic Setups, Oil Solids (MW)	RFP	280, 803-Rev7, RAV	Silver = Ag	24			24	0	0	1.00E-04	Mean sludge solids analytical data.	
003	Organic Setups, Oil Solids (MW)	RFP	280, 803-Rev7	Toluene = Toluol = Methylbenzene	18			18	0	0	2 ppmv	Mean sludge HSG analytical data.	
003	Organic Setups, Oil Solids (MW)	RFP	280, 369, 413, 421, 803-Rev7, CLM, RAV	Trichloroethane, 1,1,1- = TCA	17			17	0	N/A	23,000 ppmv	Mean sludge HSG analytical data.	
003	Organic Setups, Oil Solids (MW)	RFP	280, 369, 413, 421, 803-Rev7 CLM, RAV	Trichloroethylene = Trichloroethene = TCE	17			17	0	0	0.001	Mean sludge solids analytical data.	
003	Organic Setups, Oil Solids (MW)	RFP	CLM	Varsol	101			101	0	0		Note for RGN: See INEL-96/0280 Acceptable Knowledge - No ignitable compounds detected in free liquids.	
003	Organic Setups, Oil Solids (MW)	RFP	CLM	Vermiculite	0			0	0	0			
003	Organic Setups, Oil Solids (MW)	RFP	CLM	Waste Description: Organic wastes mixed with calcium silicate to form a grease or paste-like material	N/A	N/A	N/A	N/A	N/A	N/A		Small amounts of Oil-Dri absorbent usually mixed with the waste.	

003	Organic Setups, Oil Solids (MW)	RFP	280, 803-Rev7	Xylene = C6H4(CH3)2 = Dimethyl benzene	18			18	0	0	4 ppmv	Mean sludge HSG analytical data.	
004	Special Setups (Cement) (MW)	RFP	280, 380, 413, 421, 803-Rev7, RAV	Butanol = Butyl Alcohol = C4H9OH	4			4	0	0	4 ppmv	Mean HSG analytical data.	D006, D008, D011, F001-F003, F005
004	Special Setups (Cement) (MW)	RFP	280, 380, 413, 421, 803-Rev7, RAV	Cadmium = Cd	23	24		24	0	0	2.00E-04	Mean solids analytical data.	
004	Special Setups (Cement) (MW)	RFP	280, 380, 413, 421, 803-Rev7, RAV	Carbon Tetrachloride = CCl4 = Tetrachloromethane	17			17	0	0	6.00E-04	Mean solids analytical data.	
004	Special Setups (Cement) (MW)	RFP	12, 280, 803-Rev7, RAV	Corrosive	0			0	0	0		Note for RGN: See INEL-95/0280 Acceptable Knowledge - The material in this waste group does not meet the definition of corrosivity and is not listed as D002 waste in either EDF-803 or RPT-12.	
004	Special Setups (Cement) (MW)	RFP	280, 803-Rev7	Cyclohexane	29			29	0	0	29 ppmv	Mean HSG analytical data.	
004	Special Setups (Cement) (MW)	RFP	803-Rev7	Ethoxyethanol, 2-	4	14		4	0	0		Assumed to be present only in trace quantities based on the low concentrations of the more commonly used solvents in this waste.	
004	Special Setups (Cement) (MW)	RFP	280, 803-Rev7	Ethyl benzene = Phenylethane	18			18	0	0	0.3 ppmv	Mean HSG analytical data.	
004	Special Setups (Cement) (MW)	RFP	280, 380, 413, 421, 803-Rev7, RAV	Freon = 1,1,2-Trichloro-1,2,2-Trifluoroethane	17			17	0	0	0.4 ppmv	Mean HSG analytical data.	
004	Special Setups (Cement) (MW)	RFP	280, 380, 413, 421, 803-Rev7, RAV	Lead = Pb	23	24		24	0	0	8.00E-04	Mean solids analytical data.	
004	Special Setups (Cement) (MW)	RFP	CLM	Magnesia Cement	0			0	0	0		Pipe insulation cement	
004	Special Setups (Cement) (MW)	RFP	280, 380, 413, 421, 803-Rev7, RAV	Methanol = Methyl Alcohol = CH3OH	4			4	0	0	3,400 ppmv	Mean HSG analytical data.	
004	Special Setups (Cement) (MW)	RFP	280, 380, 421, 803-Rev7, CLM, RAV	Methylene Chloride = CH2Cl2 = Dichloromethane	17			17	0	0	0.8 ppmv	Mean HSG analytical data.	
004	Special Setups (Cement) (MW)	RFP	CLM	Oil-Dri	0			0	0	0			
004	Special Setups (Cement) (MW)	RFP	12, 280, 803-Rev7, CLM	Organic Acids	3			3	0	0		Note for RGN: See INEL-95/0280 Acceptable Knowledge - Acids were neutralized prior to solidification and this waste is not listed as corrosive in either EDF-803 or RPT-12.	
004	Special Setups (Cement) (MW)	RFP	CLM	Portland Cement	0			0	0	0			
004	Special Setups (Cement) (MW)	RFP	280, 803-Rev7	Toluene = Toluol = Methylbenzene	16			16	0	0	3 ppmv	Mean HSG analytical data.	
004	Special Setups (Cement) (MW)	RFP	280, 380, 413, 421, 803-Rev7, RAV	Trichloroethane, 1,1,1- = TCA	17			17	0	0	56 ppmv	Mean HSG analytical data.	
004	Special Setups (Cement) (MW)	RFP	280, 421, 803-Rev7, RAV	Trichloroethylene = Trichloroethene = TCE	17			17	0	0	5.00E-05	Mean solids analytical data.	
004	Special Setups (Cement) (MW)	RFP	CLM	Vermiculite	0			0	0	0			
004	Special Setups (Cement) (MW)	RFP	CLM	Waste Description: Liquids absorbed on a cement mixture. Not compatible with aqueous treatment processes. Handled separately due to their plutonium complexing nature.	N/A	N/A	N/A	N/A	N/A	N/A		Complexing liquid wastes.	
004	Special Setups (Cement) (MW)	RFP	280, 380, 413, 421, 803-Rev7, RAV	Xylene = C6H4(CH3)2 = Dimethyl benzene	18			18	0	0	1 ppmv	Mean HSG analytical data.	
005	Evaporated Salts (MW)	RFP	CLM	Metal	23			23	0	0			D001
005	Evaporated Salts (MW)	RFP	12, 380, 413, 421, 803-Rev7	Nitrate salts	104			104	104	104		Note for RGN: See NOD Response to EPA ID4890008952 - Casual or incidental nitration of cellulose is unlikely. EDF-803 and RPT-12 list this waste as D001 ignitable due to presence of nitrate salts.	
005	Evaporated Salts (MW)	RFP	CLM	Oil-Dri	0			0	0	0			
005	Evaporated Salts (MW)	RFP	CLM	Paper	101			101	0	0		Note for RGN: See NOD Response to EPA ID4890008952 - Casual or incidental nitration of cellulose is unlikely and has not occurred during the extended storage period.	
005	Evaporated Salts (MW)	RFP	CLM	Portland Cement	0			0	0	0			
005	Evaporated Salts (MW)	RFP	12, 413, 803-Rev7, CLM	Potassium Nitrate = Saltpeter = K2(NO3)	102	104		104	104	104		Note for RGN: See NOD Response to EPA ID4890008952 - Casual or incidental nitration of cellulose is unlikely. EDF-803 and RPT-12 list this waste as D001 ignitable due to presence of nitrate salts.	
005	Evaporated Salts (MW)	RFP	CLM	Rags	101			101	0	0		Note for RGN: See NOD Response to EPA ID4890008952 - Casual or incidental nitration of cellulose is unlikely and has not occurred during the extended storage period.	
005	Evaporated Salts (MW)	RFP	CLM	Salt residues, misc.	24			24	0	0			
005	Evaporated Salts (MW)	RFP	12, 805-Rev7, CLM	Sodium Nitrate = NaNO3	104			104	104	104		Note for RGN: See NOD Response to EPA ID4890008952 - Casual or incidental nitration of cellulose is unlikely. EDF-803 and RPT-12 list this waste as D001 ignitable due to presence of nitrate salts.	
005	Evaporated Salts (MW)	RFP	CLM	Waste Description: Salt residue generated from evaporation ponds: 60% sodium nitrate, 30% potassium nitrate, 10% misc.	N/A	N/A	N/A	N/A	N/A	N/A			
007	Bldg 374 Dry Sludge (MW)	RFP	12, 280, 413	Acid	2			2	0	0		Note for RGN: See INEL-95/0280 Acceptable Knowledge - Waste underwent acid neutralization process and is not listed as corrosive in this report or RPT-12. (998 listed as corrosive in EDF-803.)	D005-D011, D032, F001, F002, F005-F007, F009
007	Bldg 374 Dry Sludge (MW)	RFP	280, 803-Rev7	Arsenic = As	24			24	0	0	4.00E-04	Mean sludge solids analytical data.	
007	Bldg 374 Dry Sludge (MW)	RFP	280, 803-Rev7	Barium = Ba	21	24	107	24	0	0	0.005	Mean sludge solids analytical data.	
007	Bldg 374 Dry Sludge (MW)	RFP	280, 803-Rev7	Benzene	18			18	0	0	5.00E-05	New constituent identified (per EDF-803, Rev 7). Mean sludge solids analytical data.	
007	Bldg 374 Dry Sludge (MW)	RFP	803-Rev7	Beryllium = Be	24			24	0	0			

007	Bldg 374 Dry Sludge (MW)	RFP	280, 369, 413, 421, 803-Rev7, RAV	Butanol = Butyl Alcohol = C4H9OH	4			4	0	0	0.7 ppmv	Mean sludge HSG analytical data.	
007	Bldg 374 Dry Sludge (MW)	RFP	280, 369, 413, 421, 803-Rev7, RAV	Cadmium = Cd	23	24		24	0	0	7.00E-04	Mean sludge solids analytical data.	
007	Bldg 374 Dry Sludge (MW)	RFP	280, 369, 413, 421, 803-Rev7, RAV	Carbon Tetrachloride = CCl4 = Tetrachloromethane	17			17	0	0	5.00E-05	Mean sludge solids analytical data.	
007	Bldg 374 Dry Sludge (MW)	RFP	12, 280, 413	Caustic	10			10	0	0		Note for RGN: See INEL-96/0280 Acceptable Knowledge - Analysis indicates a pH of 7 to 12, and is not listed as corrosive in this report or RPT-12. (Still listed as corrosive in EDF-803.)	
007	Bldg 374 Dry Sludge (MW)	RFP	280, 803-Rev7, RAV	Chloroform = Trichloromethane	17			17	0	0	5.00E-05	Mean sludge solids analytical data.	
007	Bldg 374 Dry Sludge (MW)	RFP	280, 803-Rev7, RAV	Chromium = Cr	23	24		24	0	0	0.03	Mean sludge solids analytical data.	
007	Bldg 374 Dry Sludge (MW)	RFP	280, 803-Rev7	Cyanide	11			11	0	0	8.2 ppm maximum total CN	Note for RGN: See INEL-96/0280 Acceptable Knowledge - Analysis of bypass sludge indicates a maximum total cyanide concentration 8.2 mg/kg, and a maximum reactive cyanide concentration of 5.36 mg/kg. These cyanide levels will not cause the waste to be reactive.	
007	Bldg 374 Dry Sludge (MW)	RFP	280, 803-Rev7	Cyanide cleaning bath solutions	11			11	0	0	8.2 ppm maximum total CN	Note for RGN: See INEL-96/0280 Acceptable Knowledge - Analysis of bypass sludge indicates a maximum total cyanide concentration 8.2 mg/kg, and a maximum reactive cyanide concentration of 5.36 mg/kg. These cyanide levels will not cause the waste to be reactive.	
007	Bldg 374 Dry Sludge (MW)	RFP	280, 803-Rev7	Cyanide plating bath solutions	11			11	0	0	8.2 ppm maximum total CN	Note for RGN: See INEL-96/0280 Acceptable Knowledge - Analysis of bypass sludge indicates a maximum total cyanide concentration 8.2 mg/kg, and a maximum reactive cyanide concentration of 5.36 mg/kg. These cyanide levels will not cause the waste to be reactive.	
007	Bldg 374 Dry Sludge (MW)	RFP	280, RAV	Dichloromethane, 1,2- = (Ethylene dichloride)	17			17	0	0	5.00E-05	Mean sludge solids analytical data.	
007	Bldg 374 Dry Sludge (MW)	RFP	803-Rev7	Dichloroethene, 1,2- = (Dichloroethylene)	17			17	0	0	6.00E-04	Historical sludge solids analytical data.	
007	Bldg 374 Dry Sludge (MW)	RFP	280, 369, 413, 421, 803-Rev7, RAV	Freon = 1,1,2-Trichloro-1,2,2-Trifluoroethane	17			17	0	0	9 ppmv	Mean sludge HSG analytical data.	
007	Bldg 374 Dry Sludge (MW)	RFP	280, 803-Rev7	Hexachlorobenzene	17			17	0	0	1.00E-05	New constituent identified (per EDF-803, Rev 7). Mean sludge solids analytical data.	
007	Bldg 374 Dry Sludge (MW)	RFP	280, 369, 413, 421, 803-Rev7, RAV	Lead = Pb	23	24		24	0	0	0.004	Mean sludge solids analytical data.	
007	Bldg 374 Dry Sludge (MW)	RFP	280, 803-Rev7, RAV	Mercury = Hg	24			24	0	0	9.00E-04	Mean sludge solids analytical data.	
007	Bldg 374 Dry Sludge (MW)	RFP	280, 369, 413, 421, 803-Rev7, RAV	Methanol = Methyl Alcohol = CH3OH	4			4	0	0	5 ppmv	Mean sludge HSG analytical data.	
007	Bldg 374 Dry Sludge (MW)	RFP	280, 369, 413, 421, 803-Rev7, RAV	Methylene Chloride = CH2Cl2 = Dichloromethane	17			17	0	0	5 ppmv	Mean sludge HSG analytical data.	
007	Bldg 374 Dry Sludge (MW)	RFP	280, 803-Rev7	Methyl ethyl ketone = Butanone	19			19	0	0	9.00E-05	New constituent identified (per EDF-803, Rev 7). Mean sludge solids analytical data.	
007	Bldg 374 Dry Sludge (MW)	RFP	803-Rev7	Nickel = Ni	22	24		24	0	0			
007	Bldg 374 Dry Sludge (MW)	RFP	280, 803-Rev7, RAV	Perclene = Perchloroethylene = Tetrachloroethene, 1,1,2,2-	17			17	0	0	5.00E-05	Mean sludge solids analytical data.	
007	Bldg 374 Dry Sludge (MW)	RFP	280, 803-Rev7	Selenium = Se	22	23	24	24	0	0	1.00E-04	Mean sludge solids analytical data.	
007	Bldg 374 Dry Sludge (MW)	RFP	280, 803-Rev7	Silver = Ag	24			24	0	0	0.008	Mean sludge solids analytical data.	
007	Bldg 374 Dry Sludge (MW)	RFP	280, 803-Rev7	Tetrachloroethane, 1,1,2,2-	17			17	0	0	0.003	Historical sludge solids analytical data.	
007	Bldg 374 Dry Sludge (MW)	RFP	280, 803-Rev7, RAV	Toluene = Toluol = Methylbenzene	16			16	0	0	3 ppmv	Mean sludge HSG analytical data.	
007	Bldg 374 Dry Sludge (MW)	RFP	280, 369, 413, 421, 803-Rev7, RAV	Trichloroethane, 1,1,1- = TCA	17			17	0	0	0.004	Historical sludge solids analytical data.	
007	Bldg 374 Dry Sludge (MW)	RFP	280, 803-Rev7, RAV	Trichloroethylene = Trichloroethene = TCE	17			17	0	0	7.00E-05	Mean sludge solids analytical data.	
007	Bldg 374 Dry Sludge (MW)	RFP	369	Waste Description: Similar to Code 001 that was produced in building 774. Wet sludge produced from treating aqueous process wastes: ion-exchange column effluent, distillates, and caustic scrub solutions.	N/A	N/A	N/A	N/A	N/A	N/A			
007	Bldg 374 Dry Sludge (MW)	RFP	280, 369, 413, 421, 803-Rev7, RAV	Xylene = C8H4(CH3)2 = Dimethyl benzene	16			16	0	0	1 ppmv	Mean sludge HSG analytical data.	
010	Combustibles (rags, gloves, poly) (MW)	Bottle	CLM	Binary powder	101			101	0	0		Limited amounts	F002
010	Combustibles (rags, gloves, poly) (MW)	Bottle	RAV	Carbon Tetrachloride = CCl4 = Tetrachloromethane	17			17	0	0	0.075	Based on waste description, organic solvents assumed to be at trace levels.	
010	Combustibles (rags, gloves, poly) (MW)	Bottle	CLM	Diatomaceous earth = Absorbal	0			0	0	0		Diatomaceous earth	
010	Combustibles (rags, gloves, poly) (MW)	Bottle	CLM	Filters	101			101	0	0			
010	Combustibles (rags, gloves, poly) (MW)	Bottle	803-Rev7, RAV	Freon = 1,1,2-Trichloro-1,2,2-Trifluoroethane	17			17	0	0	0.15		
010	Combustibles (rags, gloves, poly) (MW)	Bottle	CLM	Glovebox floor sweepings	101			101	0	0		Limited amounts	
010	Combustibles (rags, gloves, poly) (MW)	Bottle	803-Rev7, RAV	Methylene Chloride = CH2Cl2 = Dichloromethane	17			17	0	0	0.1		
010	Combustibles (rags, gloves, poly) (MW)	Bottle	CLM	Paper	101			101	0	0			
010	Combustibles (rags, gloves, poly) (MW)	Bottle	CLM	Rags	101			101	0	0			
010	Combustibles (rags, gloves, poly) (MW)	Bottle	RAV	Trichloroethane, 1,1,1- = TCA	17			17	0	0	0.2		

010	Combustibles (rags, gloves, poly) (MW)	Bettis	CLM	Waste Description: Primarily rags, gloves, plastic, paper, Carbo-Wax, filters, oil absorbed with "Absorbtel" (diatomaceous earth) and rubber. May include some noncombustible items.	N/A	N/A	N/A	N/A	N/A	N/A			
012	Miscellaneous Sources (ROW)	Bettis	413, 421, 803-Rev7	ROW	None	None	None	None	None	None		ROW assumed to have no RGNs.	None (EDF-803)
015	Neutron Sources (ROW)	Bettis	413, 421, 803-Rev7	ROW	None	None	None	None	None	None		ROW assumed to have no RGNs.	None (EDF-803)
020	Noncompressible, Noncombustible (MW)	Bettis	CLM	Absolute filters	101			101	0	0		Based on the waste description, combustible/flammable materials have been assumed to be minor components of the waste.	D002, F002
020	Noncompressible, Noncombustible (MW)	Bettis	CLM	Aluminum = Al	22	23		23	0	0			
020	Noncompressible, Noncombustible (MW)	Bettis	CLM	Brass	23			23	0	0			
020	Noncompressible, Noncombustible (MW)	Bettis	CLM	Copper = Cu	23	24		24	0	0			
020	Noncompressible, Noncombustible (MW)	Bettis	CLM	Diatomaceous earth = Absorbal	0			0	0	0		Diatomaceous earth	
020	Noncompressible, Noncombustible (MW)	Bettis	803-Rev7, RAV	Freon = 1,1,2-Trichloro-1,2,2-Trifluoroethane	17			17	0	0	0.005	Based on waste description, organic solvents assumed to be at trace levels.	
020	Noncompressible, Noncombustible (MW)	Bettis	CLM	Furnace brick	0			0	0	0			
020	Noncompressible, Noncombustible (MW)	Bettis	CLM	Inconel (metal)	23			23	0	0			
020	Noncompressible, Noncombustible (MW)	Bettis	803-Rev7, RAV	Methylene Chloride = CH2Cl2 = Dichloromethane	17			17	0	0	0.02		
020	Noncompressible, Noncombustible (MW)	Bettis	CLM	Neutralized chemical residues	104			104	0	0			
020	Noncompressible, Noncombustible (MW)	Bettis	12, 368, 803-Rev7, CLM	Nitric Acid = HNO3	2			2	0	0		Characteristic: Corrosive. Waste is listed as D002 corrosive in EDF-803 and RPT-12. However, based on the waste description chemical solutions were neutralized to a pH of 6 to 8 and then absorbed/solidified, so the acid RGN is not assigned.	
020	Noncompressible, Noncombustible (MW)	Bettis	CLM	Waste Description: Absolute filters, solidified chemical waste, contaminated metal equipment, furnace brick, highly contaminated glovebox equipment. Metal scrap, chemical residues.	N/A	N/A	N/A	N/A	N/A	N/A			
020	Noncompressible, Noncombustible (MW)	Bettis	CLM	Zirconium = Zr	22	23	24	23	0	0			
021	Radioactive Mixed Lead Waste (MW)	INEEL	803-Rev7	Lead = Pb	23	24		23	0	0			D008 (EDF-803)
030	Solidified Grinding Sludge, etc. (MW)	Bettis	CLM	Aluminum Oxide = Al2O3	24			24	0	0			F002 (EDF-803)
030	Solidified Grinding Sludge, etc. (MW)	Bettis	CLM	Carborundum = Silicon Carbide	0			0	0	0			
030	Solidified Grinding Sludge, etc. (MW)	Bettis	CLM	Diamond dust	0			0	0	0			
030	Solidified Grinding Sludge, etc. (MW)	Bettis	803-Rev7, RAV	Freon = 1,1,2-Trichloro-1,2,2-Trifluoroethane	17			17	0	0	0.001	Based on waste description, organic solvents assumed to be at trace levels.	
030	Solidified Grinding Sludge, etc. (MW)	Bettis	803-Rev7, RAV	Methylene Chloride = CH2Cl2 = Dichloromethane	17			17	0	0	0.001		
030	Solidified Grinding Sludge, etc. (MW)	Bettis	CLM	Rubber	101			101	0	0		Based on the waste description, combustible/flammable materials have been assumed to be minor components of the waste.	
030	Solidified Grinding Sludge, etc. (MW)	Bettis	CLM	Waste Description: Solidified grinding sludge and associated fibers, rags, etc.	N/A	N/A	N/A	N/A	N/A	N/A			
040	Solid Binary Scrap Powder, Etc. (ROW)	Bettis	803-Rev7, CLM	ROW	None	None	None	None	None	None		ROW assumed to have no RGNs.	None (EDF-803, RPT-12 lists this as unknown)
050	Solidified Solutions (ROW)	Bettis	413, 421, 803-Rev7	ROW	None	None	None	None	None	None		ROW assumed to have no RGNs.	None
051	Metal Samples Fissile (ROW)	Bettis	413, 421, 803-Rev7	ROW	None	None	None	None	None	None		ROW assumed to have no RGNs.	None (EDF-803)
080	Dirt (MW)	RFP	368, 413, 421, 803-Rev7, RAV	Butanol = Butyl Alcohol = C4H9OH	4			4	0	0	0.001	Organic solvents assumed to be present in trace quantities, similar to those for IDC 374, IDC 90 replaced by IDC 374 in 1975.	F001-F004
080	Dirt (MW)	RFP	368, 413, 421, 803-Rev7, RAV	Carbon Tetrachloride = CCl4 = Tetrachloromethane	17			17	0	0	0.07	Organic solvents assumed to be present in trace quantities, similar to those for IDC 374, IDC 90 replaced by IDC 374 in 1975.	
080	Dirt (MW)	RFP	CLM	Coveralls	101			101	0	0		Based on the waste description, combustible/flammable materials have been assumed to be minor components of the waste.	
080	Dirt (MW)	RFP	CLM	Dirt	0			0	0	0			
080	Dirt (MW)	RFP	CLM	Evaporator pond sludge	0			0	0	0			
080	Dirt (MW)	RFP	368, 413, 421, 803-Rev7, RAV	Freon = 1,1,2-Trichloro-1,2,2-Trifluoroethane	17			17	0	0	0.01	Organic solvents assumed to be present in trace quantities, similar to those for IDC 374, IDC 90 replaced by IDC 374 in 1975.	
080	Dirt (MW)	RFP	CLM	Gloves	101			101	0	0		Based on the waste description, combustible/flammable materials have been assumed to be minor components of the waste.	
080	Dirt (MW)	RFP	368, 413, 421, 803-Rev7, RAV	Methanol = Methyl Alcohol = CH3OH	4			4	0	0	0.001	Organic solvents assumed to be present in trace quantities, similar to those for IDC 374, IDC 90 replaced by IDC 374 in 1975.	
080	Dirt (MW)	RFP	368, 413, 421, 803-Rev7, RAV	Methylene Chloride = CH2Cl2 = Dichloromethane	17			17	0	0	0.005	Organic solvents assumed to be present in trace quantities, similar to those for IDC 374, IDC 90 replaced by IDC 374 in 1975.	
080	Dirt (MW)	RFP	368, 413	Nitrates	104			104	0	0		Oxidizer on organic soil would have already reacted. Characteristic: Ignitable	
080	Dirt (MW)	RFP	368, 421, 803-Rev7, RAV	Nitrobenzene = C6H5NO2 = Nitrobenzol	27			27	0	0		Organic solvents assumed to be present in trace quantities, similar to those for IDC 374, IDC 90 replaced by IDC 374 in 1975.	
080	Dirt (MW)	RFP	CLM	Oil-Dri	0			0	0	0			
080	Dirt (MW)	RFP	368, 413, 421, 803-Rev7, RAV	Perclene = Perchloroethylene = Tetrachloroethene, 1,1,2,2-	17			17	0	0		Organic solvents assumed to be present in trace quantities, similar to those for IDC 374, IDC 90 replaced by IDC 374 in 1975.	
080	Dirt (MW)	RFP	368, 413, 421, 803-Rev7, RAV	Trichloroethane, 1,1,1- = TCA	17			17	0	0	0.02	Organic solvents assumed to be present in trace quantities, similar to those for IDC 374, IDC 90 replaced by IDC 374 in 1975.	
080	Dirt (MW)	RFP	368, 413, 421, 803-Rev7, RAV	Trichloroethylene = Trichloroethene = TCE	17			17	0	0		Organic solvents assumed to be present in trace quantities, similar to those for IDC 374, IDC 90 replaced by IDC 374 in 1975.	

090	Dirt (MW)	RFP	CLM	Waste Description: Dry dirt or soil generated from cleanup of spills, leaks, etc. May also include evaporator pond sludge. May also include some combustibles such as coverall and gloves.	N/A	N/A	N/A	N/A	N/A	N/A		See also 990. IDCs 90 and 990 replaced by IDC 374 in 1975.	
090	Dirt (MW)	RFP	369, 413, 421, 803-Rev7, RAV	Xylene = C6H4(CH3)2 = Dimethyl benzene	16			16	0	0	0.001	Organic solvents assumed to be present in trace quantities, similar to those for IDC 374. IDC 90 replaced by IDC 374 in 1975.	
095	Sludge (UNK)	RFP	369, 421, 803-Rev7	Waste Description: Moist to dry sewer sludge from stabilization ponds at STP.	Unkn	Unkn	Unkn	Unkn	Unkn	Unkn		Characteristic: Unknown	Unknown
100	General Plant Waste (MW)	ANL-E	421	Ether = (CH3CH2)2O	14			14	0	0		Organic wastes were absorbed on vermiculite and allowed to dry. Assume organic solvents are still present but at trace levels.	D001, F003 (EDF-803)
100	General Plant Waste (MW)	ANL-E	369, CLM	Ether-based scintillation fluids	14			14	0	0		Organic wastes were absorbed on vermiculite and allowed to dry. Assume organic solvents are still present but at trace levels.	
100	General Plant Waste (MW)	ANL-E	803-Rev7, RAV	Ethyl ether = Diethyl ether	14			14	0	0		Organic wastes were absorbed on vermiculite and allowed to dry. Assume organic solvents are still present but at trace levels.	
100	General Plant Waste (MW)	ANL-E	12, 369, 413, 421, 803-Rev7, CLM	Nitrated organic ion exchange resins	104			104	104	104		Listed as D001 due to nitrates in EDF-803 and RPT-12.	
100	General Plant Waste (MW)	ANL-E	369, CLM	Oil: Lubricating	101			101	0	0			
100	General Plant Waste (MW)	ANL-E	369, CLM	Oil: Machining	101			101	0	0			
100	General Plant Waste (MW)	ANL-E	369, CLM	Oil: Pump	101			101	0	0			
100	General Plant Waste (MW)	ANL-E	CLM	Paper	101			101	0	0			
100	General Plant Waste (MW)	ANL-E	CLM	Polycontorinated Biphenyls = PCBs	17			17	0	0		Further evaluations indicate no PCBs	
100	General Plant Waste (MW)	ANL-E	CLM	Rags	101			101	0	0			
100	General Plant Waste (MW)	ANL-E	CLM	Vermiculite	0			0	0	0			
100	General Plant Waste (MW)	ANL-E	CLM	Waste Description: Rags, paper rubber gloves, plastic bottles, glassware, small tools, balances, empty metal cans. Prior to 1981 - isolated quantities of absorbed organic wastes.	N/A	N/A	N/A	N/A	N/A	N/A			
101	Cut Up Gloveboxes (MW)	ANL-E	CLM	Glovebox sections	23			23	0	0			D008 (EDF-803)
101	Cut Up Gloveboxes (MW)	ANL-E	369, 413, 421, 803-Rev7, RAV	Lead = Pb	23	24		23	0	0	5	Characteristic: EP Toxic	
101	Cut Up Gloveboxes (MW)	ANL-E	CLM	Paint	101			101	0	0		Based on the waste description, combustible/flammable materials have been assumed to be minor components of the waste.	
101	Cut Up Gloveboxes (MW)	ANL-E	CLM	Waste Description: Glovebox sections and associated equipment.	N/A	N/A	N/A	N/A	N/A	N/A			
102	Absorbed Liquids (MW)	ANL-E	803-Rev7	Ethyl ether = Diethyl ether	14			14	0	0			D001*, F003 (EDF-803)
102	Absorbed Liquids (MW)	ANL-E	413, 803-Rev7, CLM	Nitrates	104			104	0	0		Listed as D001 ignitable waste in EDF-803 due to nitrates. However, based on the waste description, any acids were neutralized to a pH of 10 before adding vermiculite and the nitrate RGN is not assigned.	
102	Absorbed Liquids (MW)	ANL-E	369, CLM, 803-Rev7	Sodium Hydroxide = NaOH = Caustic soda = Lye	10			10	0	0		pH < 10 and EDF-803 does not list this waste as corrosive.	
102	Absorbed Liquids (MW)	ANL-E	CLM	Vermiculite	0			0	0	0			
102	Absorbed Liquids (MW)	ANL-E	CLM	Waste Description: Liquid waste adjusted to pH of 10 with NaOH. Then absorbed on vermiculite	N/A	N/A	N/A	N/A	N/A	N/A			
104	Alpha-Gamma Hot Cell Facility Waste (ROW)	ANL-E	369, 421, 803-Rev7, RAV	ROW	None	None	None	None	None	None		ROW assumed to have no RGNs.	None (EDF-803)
105	Empty Bottles and Absorbent (MW)	ANL-E	803-Rev7	Ethyl ether = Diethyl ether	14			14	0	0		Based on waste description, organic solvents assumed to be at trace levels.	D001, F003 (EDF-803)
105	Empty Bottles and Absorbent (MW)	ANL-E	413, 803-Rev7	Nitrates	104			104	0	0		Listed as D001 ignitable waste in EDF-803 due to nitrates. However, based on the waste description, the bottles were emptied and vermiculite added to absorb any remaining liquid so the nitrate RGN is not assigned.	
105	Empty Bottles and Absorbent (MW)	ANL-E	CLM	Vermiculite	0			0	0	0			
105	Empty Bottles and Absorbent (MW)	ANL-E	CLM	Waste Description: Empty polyethylene and glass bottles.	N/A	N/A	N/A	N/A	N/A	N/A			
107	Alpha Hot Cell Waste (ROW)	ANL-E	803-Rev7	ROW	None	None	None	None	None	None		ROW assumed to have no RGNs.	None (EDF-803)
110	Research Generated Waste Compactible and Combustible Solids (MW)	ANL-E	TRUW-12	Acetone = Dimethyl ketone	19			19					F003, D004, D006, D008
110	Research Generated Waste Compactible and Combustible Solids (MW)	ANL-E	TRUW-12	Cadmium = Cd	23	24		24	0	0			F003, D004, D006, D008
110	Research Generated Waste Compactible and Combustible Solids (MW)	ANL-E	TRUW-12	Lead = Pb	23	24		23	0	0			F003, D004, D006, D008
111	Miscellaneous Source Material (ROW)	Bendix	803-Rev7	ROW	None	None	None	None	None	None		ROW assumed to have no RGNs.	None (EDF-803)
120	Decontamination and Decommissioning Waste Compactible and Combustible Solids (MW)	ANL-E	TRUW-12	Acetone = Dimethyl ketone	19			19					F003, D004, D006, D008
120	Decontamination and Decommissioning Waste Compactible and Combustible Solids (MW)	ANL-E	TRUW-12	Lead = Pb	23	24		23	0	0			F003, D004, D006, D008
120	Decontamination and Decommissioning Waste Compactible and Combustible Solids (MW)	ANL-E	TRUW-12	Cadmium = Cd	23	24		24	0	0			F003, D004, D006, D008
121	TRU Organic Solid Waste (MW)	ANL-E	TRUW-12	Lead = Pb	23	24		23	0	0			F003, D004-D009
121	TRU Organic Solid Waste (MW)	ANL-E	TRUW-12	Barium = Ba	21	24	107	24	0	0			F003, D004-D009
121	TRU Organic Solid Waste (MW)	ANL-E	TRUW-12	Cadmium = Cd	23	24		24	0	0			F003, D004-D009
121	TRU Organic Solid Waste (MW)	ANL-E	TRUW-12	Mercury = Hg	24			24	0	0			F003, D004-D009
121	TRU Organic Solid Waste (MW)	ANL-E	TRUW-12	Chromium = Cr	23	24		24	0	0			F003, D004-D009
142	Scrap Processing Equipment (ROW)	Mexico	803-Rev7	ROW	None	None	None	None	None	None		ROW assumed to have no RGNs.	None (EDF-803)
150	Laboratory Waste (MW)	INEEL	369, 413, 421, 803-Rev7, RAV	Acidic residues	2			2	2	2		Note for RGN: Used RGN 2 for Acids, Mineral, Oxidizing because it's the worst case. Note for RGNs: Per EDF 413: Self incompatibles involving reaction Group 2 are not considered a risk. Listed as a D002 corrosive waste in EDF-803.	D002, D008 (EDF-803)
150	Laboratory Waste (MW)	INEEL	CLM	Aluminum foil	23			23	0	0			
150	Laboratory Waste (MW)	INEEL	CLM	Chlorinated ion exchange resins	101			101	0	0			

150	Laboratory Waste (MW)	INEEL	369, 413, 421, 803-Rev7, RAV	Lead = Pb	23	24		23	0	0	0.2	Characteristic: EP Toxic	
150	Laboratory Waste (MW)	INEEL	CLM	Oil-Dri	0			0	0	0			
150	Laboratory Waste (MW)	INEEL	CLM	Pu sources	23	24		24	0	0			
150	Laboratory Waste (MW)	INEEL	CLM	Trash	101			101	0	0			
150	Laboratory Waste (MW)	INEEL	CLM	U3O8 pellets	23	24		24	0	0			
150	Laboratory Waste (MW)	INEEL	CLM	Waste Description: Plutonia, fission counters, HEDL samples, analytical samples, glassware, vials, aluminum foil, capsules, resins, kimwipes, gloves...	N/A	N/A	N/A	N/A	N/A	N/A			
151	Solidified Fuel Sludge	INEEL	TRUW-12	Lead = Pb	23	24		23	0	0			D008
152	Plutonium Neutron Sources (ROW)	INEEL	803-Rev7, CLM	ROW	None	None	None	None	None	None		ROW assumed to have no RGNs.	None (EDF-803)
153	Combustible Lab Waste (ROW)	INEEL	369, 413, 803-Rev7	ROW	None	None	None	None	None	None		ROW assumed to have no RGNs.	None (EDF-803)
154	Sample Fuel (ROW)	INEEL	803-Rev7, CLM	ROW	None	None	None	None	None	None		ROW assumed to have no RGNs.	None (EDF-803)
155	TRU Scrap (ROW)	INEEL	803-Rev7	ROW	None	None	None	None	None	None		ROW assumed to have no RGNs.	None (EDF-803)
156	Chem Cell Rip-Out (UNK)	INEEL	803-Rev7, CLM	Waste Description: Steel piping, vessels, and associated materials. Some scaffolding, anti-contamination clothing, concrete, welding slag.	Unkn	Unkn	Unkn	Unkn	Unkn	Unkn			Unknown (EDF-803)
157	Miscellaneous Sources (MW)	INEEL	803-Rev7	Lead = Pb	23	24		23	0	0			D008 (EDF-803)
160	ANL-W HFEF Analytical Chemistry and Metallographic Combustibles (ROW)	INEEL	421, 803-Rev7, RAV	ROW	None	None	None	None	None	None		ROW assumed to have no RGNs.	None (EDF-803)
161	ANL-W Analytical Chemistry Lab Glassware (ROW)	INEEL	413, 421, 803-Rev7, RAV	ROW	None	None	None	None	None	None		ROW assumed to have no RGNs.	None (EDF-803)
162	ANL-W FMF EFL Zr-U Fuel Casting Alloys Residues (ROW)	INEEL	413, 421, 803-Rev7, RAV	ROW	None	None	None	None	None	None		ROW assumed to have no RGNs.	None (EDF-803)
163	ANL-W ACL Cold-Line Absorbed Liquid, Misc. Hardware, Polyethylene (ROW)	INEEL	413, 421, 803-Rev7, RAV	ROW	None	None	None	None	None	None		ROW assumed to have no RGNs.	None (EDF-803)
164	WIPP Experimental Test Program Process Waste (MW)	INEEL	803-Rev7	Acetone = Dimethyl ketone	19			19	0	0		Note for RGN: Headspace gas. See EDF-803-Rev-7 Reference 21: R. L. Parks ... Misc. items including plastics, paper products, cloth, rubber and metal. Organic solvents are assumed to be at trace levels similar to those of the RFP wastes examined.	D005-D009, D011, D022, D028, D029, F001-F005 (EDF-803)
164	WIPP Experimental Test Program Process Waste (MW)	INEEL	803-Rev7	Barium = Ba	21	24	107	24	0	0			
164	WIPP Experimental Test Program Process Waste (MW)	INEEL	803-Rev7	Benzene	16			16	0	0		Note for RGN: Headspace gas. See EDF-803-Rev-7 Reference 21: R. L. Parks ... Misc. items including plastics, paper products, cloth, rubber and metal.	
164	WIPP Experimental Test Program Process Waste (MW)	INEEL	803-Rev7	Butanol = Butyl Alcohol = C4H9OH	4			4	0	0		Note for RGN: Headspace gas. See EDF-803-Rev-7 Reference 21: R. L. Parks ... Misc. items including plastics, paper products, cloth, rubber and metal.	
164	WIPP Experimental Test Program Process Waste (MW)	INEEL	803-Rev7	Cadmium = Cd	23	24		24	0	0			
164	WIPP Experimental Test Program Process Waste (MW)	INEEL	803-Rev7	Carbon Tetrachloride = CCl4 = Tetrachloromethane	17			17	0	0		Note for RGN: Headspace gas. See EDF-803-Rev-7 Reference 21: R. L. Parks ... Misc. items including plastics, paper products, cloth, rubber and metal.	
164	WIPP Experimental Test Program Process Waste (MW)	INEEL	803-Rev7	Chloroform = Trichloromethane	17			17	0	0		Note for RGN: Headspace gas. See EDF-803-Rev-7 Reference 21: R. L. Parks ... Misc. items including plastics, paper products, cloth, rubber and metal.	
164	WIPP Experimental Test Program Process Waste (MW)	INEEL	803-Rev7	Chromium = Cr	23	24		24	0	0			
164	WIPP Experimental Test Program Process Waste (MW)	INEEL	803-Rev7	Dichloroethane, 1,2- = (Ethylene dichloride)	17			17	0	0		Note for RGN: Headspace gas. See EDF-803-Rev-7 Reference 21: R. L. Parks ... Misc. items including plastics, paper products, cloth, rubber and metal.	
164	WIPP Experimental Test Program Process Waste (MW)	INEEL	803-Rev7	Dichloroethene, 1,1- = Dichloroethylene, 1,1-	17			17	0	0		Note for RGN: Headspace gas. See EDF-803-Rev-7 Reference 21: R. L. Parks ... Misc. items including plastics, paper products, cloth, rubber and metal.	
164	WIPP Experimental Test Program Process Waste (MW)	INEEL	803-Rev7	Ethyl benzene = Phenylethane	16			16	0	0		Note for RGN: Headspace gas. See EDF-803-Rev-7 Reference 21: R. L. Parks ... Misc. items including plastics, paper products, cloth, rubber and metal.	
164	WIPP Experimental Test Program Process Waste (MW)	INEEL	803-Rev7	Freon = 1,1,2-Trichloro-1,2,2-Trifluoroethane	17			17	0	0		Note for RGN: Headspace gas. See EDF-803-Rev-7 Reference 21: R. L. Parks ... Misc. items including plastics, paper products, cloth, rubber and metal.	
164	WIPP Experimental Test Program Process Waste (MW)	INEEL	803-Rev7	Lead = Pb	23	24		24	0	0			
164	WIPP Experimental Test Program Process Waste (MW)	INEEL	803-Rev7	Mercury = Hg	24			24	0	0			
164	WIPP Experimental Test Program Process Waste (MW)	INEEL	803-Rev7	Methanol = Methyl Alcohol = CH3OH	4			4	0	0		Note for RGN: Headspace gas. See EDF-803-Rev-7 Reference 21: R. L. Parks ... Misc. items including plastics, paper products, cloth, rubber and metal.	
164	WIPP Experimental Test Program Process Waste (MW)	INEEL	803-Rev7	Methylene Chloride = CH2Cl2 = Dichloromethane	17			17	0	0		Note for RGN: Headspace gas. See EDF-803-Rev-7 Reference 21: R. L. Parks ... Misc. items including plastics, paper products, cloth, rubber and metal.	
164	WIPP Experimental Test Program Process Waste (MW)	INEEL	803-Rev7	Nitrobenzene = C6H5NO2 = Nitrobenzol	27			27	0	0		Note for RGN: Headspace gas. See EDF-803-Rev-7 Reference 21: R. L. Parks ... Misc. items including plastics, paper products, cloth, rubber and metal.	
164	WIPP Experimental Test Program Process Waste (MW)	INEEL	803-Rev7	Perclene = Perchloroethylene = Tetrachloroethene, 1,1,2,2-	17			17	0	0		Note for RGN: Headspace gas. See EDF-803-Rev-7 Reference 21: R. L. Parks ... Misc. items including plastics, paper products, cloth, rubber and metal.	
164	WIPP Experimental Test Program Process Waste (MW)	INEEL	803-Rev7	Silver = Ag	24			24	0	0			
164	WIPP Experimental Test Program Process Waste (MW)	INEEL	803-Rev7	Toluene = Toluol = Methylbenzene	16			16	0	0		Note for RGN: Headspace gas. See EDF-803-Rev-7 Reference 21: R. L. Parks ... Misc. items including plastics, paper products, cloth, rubber and metal.	
164	WIPP Experimental Test Program Process Waste (MW)	INEEL	803-Rev7	Trichloroethane, 1,1,1- = TCA	17			17	0	0		Note for RGN: Headspace gas. See EDF-803-Rev-7 Reference 21: R. L. Parks ... Misc. items including plastics, paper products, cloth, rubber and metal.	
164	WIPP Experimental Test Program Process Waste (MW)	INEEL	803-Rev7	Trichloroethylene = Trichloroethene = TCE	17			17	0	0		Note for RGN: Headspace gas. See EDF-803-Rev-7 Reference 21: R. L. Parks ... Misc. items including plastics, paper products, cloth, rubber and metal.	
164	WIPP Experimental Test Program Process Waste (MW)	INEEL	803-Rev7	Xylene = C6H4(CH3)2 = Dimethyl benzene	16			16	0	0		Note for RGN: Headspace gas. See EDF-803-Rev-7 Reference 21: R. L. Parks ... Misc. items including plastics, paper products, cloth, rubber and metal.	
201	Noncombustible Solids (MW)	Battelle	CLM	Crucibles	0			0	0	0			D005-D009, D011, F001, F002, F005 (RPT-12 and TCP-96-04; only D008 in EDF-803)
201	Noncombustible Solids (MW)	Battelle	96-04	Barium = Ba	21	24	107	24	0	0			
201	Noncombustible Solids (MW)	Battelle	96-04	Benzene	16			16	0	0		Based on the debris waste descriptions in TCP-96-04, organic solvents are assumed to be present in trace quantities.	
201	Noncombustible Solids (MW)	Battelle	96-04	Cadmium = Cd	23	24		24	0	0			

201	Noncombustible Solids (MW)	Battelle	98-04	Chromium = Cr	23	24		24	0	0			
201	Noncombustible Solids (MW)	Battelle	CLM	Filters	101			101	0	0		Based on the debris waste description, combustible/flammable materials have been assumed to be minor components of the waste.	
201	Noncombustible Solids (MW)	Battelle	369, 413, 421, 803-Rev7, CLM, RAV	Lead = Pb	23	24		23	0	0	5	Characteristic: EP Toxic	
201	Noncombustible Solids (MW)	Battelle	98-04	Mercury = Hg	24			24	0	0			
201	Noncombustible Solids (MW)	Battelle	98-04	Methylene Chloride = CH2Cl2 = Dichloromethane	17			17	0	0		Based on the debris waste descriptions in TCP-98-04, organic solvents are assumed to be present in trace quantities.	
201	Noncombustible Solids (MW)	Battelle	98-04	Methyl ethyl ketone = Butanone	19			19	0	0		Based on the debris waste descriptions in TCP-98-04, organic solvents are assumed to be present in trace quantities.	
201	Noncombustible Solids (MW)	Battelle	98-04	Silver = Ag	24			24	0	0			
201	Noncombustible Solids (MW)	Battelle	98-04	Toluene = Toluol = Methylbenzene	16			16	0	0		Based on the debris waste descriptions in TCP-98-04, organic solvents are assumed to be present in trace quantities.	
201	Noncombustible Solids (MW)	Battelle	98-04	Trichloroethylene = Trichloroethene = TCE	17			17	0	0		Based on the debris waste descriptions in TCP-98-04, organic solvents are assumed to be present in trace quantities.	
201	Noncombustible Solids (MW)	Battelle	CLM	Waste Description: Tools, crucibles, piping, valves, equipment pieces, lead bricks, Plexiglass, filters.	N/A	N/A	N/A	N/A	N/A	N/A			
202	Combustible Solids, Paper, Cloth (MW)	Battelle	12, 98-04, 803-Rev7, CLM	Plastic	101			101	0	0		Note: EDF-803, Rev. 7 lists this waste as ROW, but RPT-12 has assigned HWNs based on *TCP-98-04, Building JN-4 Plutonium Laboratory Acceptable Knowledge Document.*	D005-D009, D011, F001, F002, F005 (RPT-12 and TCP-98-04, ROW in EDF-803)
202	Combustible Solids, Paper, Cloth (MW)	Battelle	CLM	Rubber	101			101	0	0			
202	Combustible Solids, Paper, Cloth (MW)	Battelle	98-04	Barium = Ba	21	24	107	24	0	0			
202	Combustible Solids, Paper, Cloth (MW)	Battelle	98-04	Benzene	16			16	0	0		Based on the debris waste descriptions in TCP-98-04, organic solvents are assumed to be present in trace quantities.	
202	Combustible Solids, Paper, Cloth (MW)	Battelle	98-04	Cadmium = Cd	23	24		24	0	0			
202	Combustible Solids, Paper, Cloth (MW)	Battelle	98-04	Chromium = Cr	23	24		24	0	0			
202	Combustible Solids, Paper, Cloth (MW)	Battelle	98-04	Lead = Pb	23	24		24	0	0			
202	Combustible Solids, Paper, Cloth (MW)	Battelle	98-04	Mercury = Hg	24			24	0	0			
202	Combustible Solids, Paper, Cloth (MW)	Battelle	98-04	Methylene Chloride = CH2Cl2 = Dichloromethane	17			17	0	0		Based on the debris waste descriptions in TCP-98-04, organic solvents are assumed to be present in trace quantities.	
202	Combustible Solids, Paper, Cloth (MW)	Battelle	98-04	Methyl ethyl ketone = Butanone	19			19	0	0		Based on the debris waste descriptions in TCP-98-04, organic solvents are assumed to be present in trace quantities.	
202	Combustible Solids, Paper, Cloth (MW)	Battelle	98-04	Silver = Ag	24			24	0	0			
202	Combustible Solids, Paper, Cloth (MW)	Battelle	98-04	Toluene = Toluol = Methylbenzene	16			16	0	0		Based on the debris waste descriptions in TCP-98-04, organic solvents are assumed to be present in trace quantities.	
202	Combustible Solids, Paper, Cloth (MW)	Battelle	98-04	Trichloroethylene = Trichloroethene = TCE	17			17	0	0		Based on the debris waste descriptions in TCP-98-04, organic solvents are assumed to be present in trace quantities.	
202	Combustible Solids, Paper, Cloth (MW)	Battelle	CLM	Waste Description: Wood, plastic suits, plastic tent structures, shoe covers, rubber gloves, air hose.	N/A	N/A	N/A	N/A	N/A	N/A			
202	Combustible Solids, Paper, Cloth (MW)	Battelle	CLM	Wood	101			101	0	0			
203	Paper, Cloth, Metals, Glass (MW)	Battelle	12, 98-04, 803-Rev7, RAV	Lead = Pb	23	24		23	0	0	0.2	Note: EDF-803, Rev. 7 lists this waste as ROW, but RPT-12 has assigned HWNs based on *TCP-98-04, Building JN-4 Plutonium Laboratory Acceptable Knowledge Document.*	D005-D009, D011, F001, F002, F005 (RPT-12 and TCP-98-04; ROW and PCBs in EDF-803)
203	Paper, Cloth, Metals, Glass (MW)	Battelle	98-04, RAV	Methylene Chloride = CH2Cl2 = Dichloromethane	17			17	0	0	0.02		
203	Paper, Cloth, Metals, Glass (MW)	Battelle	98-04	Barium = Ba	21	24	107	24	0	0			
203	Paper, Cloth, Metals, Glass (MW)	Battelle	98-04	Benzene	16			16	0	0		Based on the debris waste descriptions in TCP-98-04, organic solvents are assumed to be present in trace quantities.	
203	Paper, Cloth, Metals, Glass (MW)	Battelle	98-04	Cadmium = Cd	23	24		24	0	0			
203	Paper, Cloth, Metals, Glass (MW)	Battelle	98-04	Chromium = Cr	23	24		24	0	0			
203	Paper, Cloth, Metals, Glass (MW)	Battelle	98-04	Mercury = Hg	24			24	0	0			
203	Paper, Cloth, Metals, Glass (MW)	Battelle	98-04	Methylene Chloride = CH2Cl2 = Dichloromethane	17			17	0	0		Based on the debris waste descriptions in TCP-98-04, organic solvents are assumed to be present in trace quantities.	
203	Paper, Cloth, Metals, Glass (MW)	Battelle	98-04	Methyl ethyl ketone = Butanone	19			19	0	0		Based on the debris waste descriptions in TCP-98-04, organic solvents are assumed to be present in trace quantities.	
203	Paper, Cloth, Metals, Glass (MW)	Battelle	98-04	Silver = Ag	24			24	0	0			
203	Paper, Cloth, Metals, Glass (MW)	Battelle	98-04	Toluene = Toluol = Methylbenzene	16			16	0	0		Based on the debris waste descriptions in TCP-98-04, organic solvents are assumed to be present in trace quantities.	
203	Paper, Cloth, Metals, Glass (MW)	Battelle	98-04	Trichloroethylene = Trichloroethene = TCE	17			17	0	0		Based on the debris waste descriptions in TCP-98-04, organic solvents are assumed to be present in trace quantities.	
203	Paper, Cloth, Metals, Glass (MW)	Battelle	CLM	Paper	101			101	0	0			
203	Paper, Cloth, Metals, Glass (MW)	Battelle	98-04, 803-Rev7	Polychlorinated Biphenyls = PCBs	17			17	0	0		Note for RGN: Drums with PCBs will not be super-compacted. PCBs should be absorbed. Per CLM: the waste is dried prior to packaging. (Note: TCP-98-04 states that the debris waste streams are not TSCA-regulated wastes containing PCBs.)	
203	Paper, Cloth, Metals, Glass (MW)	Battelle	CLM	Waste Description: Combustibles: paper, paper products. Noncombustibles: metal, some glass.	N/A	N/A	N/A	N/A	N/A	N/A			
203	Paper, Cloth, Metals, Glass (MW)	Battelle	RAV	Xylene = C6H4(CH3)2 = Dimethyl benzene	16			16	0	0	0.005		
204	Solidified Solutions (MW)	Battelle	12, 98-04, 803-Rev7, CLM	Plaster-of-Paris	0			0	0	0		Note: EDF-803, Rev. 7 lists this waste as ROW, but RPT-12 has assigned HWNs based on *TCP-98-04, Building JN-4 Plutonium Laboratory Acceptable Knowledge Document.*	D005-D009, D011, F001, F002, F005 (RPT-12 and TCP-98-04, ROW in EDF-803)
204	Solidified Solutions (MW)	Battelle	98-04	Barium = Ba	21	24	107	24	0	0			
204	Solidified Solutions (MW)	Battelle	98-04	Benzene	16			16	0	0		Based on the solidified Turco decontamination solution waste description in TCP-98-04, organic solvents are assumed to be present in trace quantities.	
204	Solidified Solutions (MW)	Battelle	98-04	Cadmium = Cd	23	24		24	0	0			
204	Solidified Solutions (MW)	Battelle	98-04	Chromium = Cr	23	24		24	0	0			
204	Solidified Solutions (MW)	Battelle	98-04	Lead = Pb	23	24		24	0	0			
204	Solidified Solutions (MW)	Battelle	98-04	Mercury = Hg	24			24	0	0			
204	Solidified Solutions (MW)	Battelle	98-04	Methylene Chloride = CH2Cl2 = Dichloromethane	17			17	0	0		Based on the solidified Turco decontamination solution waste description in TCP-98-04, organic solvents are assumed to be present in trace quantities.	
204	Solidified Solutions (MW)	Battelle	98-04	Methyl ethyl ketone = Butanone	19			19	0	0		Based on the solidified Turco decontamination solution waste description in TCP-98-04, organic solvents are assumed to be present in trace quantities.	
204	Solidified Solutions (MW)	Battelle	98-04	Silver = Ag	24			24	0	0			
204	Solidified Solutions (MW)	Battelle	98-04	Toluene = Toluol = Methylbenzene	16			16	0	0		Based on the solidified Turco decontamination solution waste description in TCP-98-04, organic solvents are assumed to be present in trace quantities.	

204	Solidified Solutions (MW)	Bellville	98-04	Trichloroethylene = Trichloroethene = TCE	17			17	0	0		Based on the solidified Turco decontamination solution waste description in TCP-98-04, organic solvents are assumed to be present in trace quantities.	
204	Solidified Solutions (MW)	Bellville	CLM	Waste Description: Solidified solutions from washing gloveboxes. Approximately 30 gallons of water with Turco soap is mixed with 250 pounds of Plaster-of-Paris and allowed to cure in the drum	N/A	N/A	N/A	N/A	N/A	N/A			
241	Americium Process Residue (MW)	RFP	12, 280, 413, 803-Rev7, RAV	Acid	2			2	2	2		Note for RGN: See INEL-95/0280 Acceptable Knowledge - Nitric and hydrochloric acids were used in the glovebox ... and may be contained in the bottles. EDF-803 and RPT-12 and INEL-95/0280 all list this waste as D002 corrosive.	D001, D002, D008, F002, F003
241	Americium Process Residue (MW)	RFP	803-Rev7, RAV	Lead = Pb	23	24		24	0	0	0.2		
241	Americium Process Residue (MW)	RFP	803-Rev7, RAV	Methylene Chloride = CH2Cl2 = Dichloromethane	17			17	0	0	0.02	Organic solvents assumed to be at trace levels.	
241	Americium Process Residue (MW)	RFP	12, 280, 803-Rev7, RAV	Nitrates	104			104	104	104	*	Note for RGN: See INEL-95/0280 Acceptable Knowledge - Materials in this waste group may meet the definition of ignitability as defined in 40 CFR 261.21 due to cellulosic materials contaminated with nitrate salts. A risk of spontaneous combustion has been identified. EDF-803 and RPT-12 and INEL-95/0280 all list this waste as D001 ignitable due to nitrates.	
241	Americium Process Residue (MW)	RFP	369, 413, 421, 803-Rev7, RAV	Xylene = C6H4(CH3)2 = Dimethyl benzene	16			16	0	0	0.005	Characteristic: Ignitable	
290	Filter and Off-Gas Sludge (MW)	RFP	12, 281, 369, 413, 421, 803-Rev7, CLM	Acid	2			2	0	0		Used RGN 2 for Acids, Mineral, Oxidizing because it's the worst case. Even though EDF-803 and RPT-12 list this waste as D002 corrosive, INEL-95/0281 states that this IOC was replaced by IOC 292 in 1974. Since IOC 292 is not corrosive for acids, it is assumed that IOC 290 does not warrant an acid RGN.	D002, D006, D008, F001-F003
290	Filter and Off-Gas Sludge (MW)	RFP	369, 413, 421, 803-Rev7, RAV	Butanol = Butyl Alcohol = C4H9OH	4			4	0	0	0.001	Characteristic: Ignitable. Organic solvent concentrations have been assumed to be present in trace quantities similar to those for IOC 292.	
290	Filter and Off-Gas Sludge (MW)	RFP	369, 413, 421, 803-Rev7, RAV	Cadmium = Cd	23	24		24	0	0	0.001	Characteristic: EP Toxic	
290	Filter and Off-Gas Sludge (MW)	RFP	369, 413, 421, 803-Rev7, RAV	Carbon Tetrachloride = CCl4 = Tetrachloromethane	17			17	0	0	0.002	Characteristic: Toxic	
290	Filter and Off-Gas Sludge (MW)	RFP	369, 413, 421, 803-Rev7, RAV	Freon = 1,1,2-Trichloro-1,2,2-Trifluoroethane	17			17	0	0	0.002	Characteristic: Toxic	
290	Filter and Off-Gas Sludge (MW)	RFP	CLM	Ice cream cartons	101			101	0	0		Based on the waste description, combustible/flammable materials have been assumed to be minor components of the waste.	
290	Filter and Off-Gas Sludge (MW)	RFP	369, 413, 421, 803-Rev7, RAV	Lead = Pb	23	24		23	0	0	0.001	Characteristic: EP Toxic	
290	Filter and Off-Gas Sludge (MW)	RFP	369, 413, 421, 803-Rev7, RAV	Methanol = Methyl Alcohol = CH3OH	4			4	0	0	0.001	Characteristic: Ignitable	
290	Filter and Off-Gas Sludge (MW)	RFP	369, 413, 421, 803-Rev7, RAV	Methylene Chloride = CH2Cl2 = Dichloromethane	17			17	0	0	0.001	Characteristic: Toxic	
290	Filter and Off-Gas Sludge (MW)	RFP	12, 280, 413, 803-Rev7	Nitrates	104			104	0	0		Nitrates are not listed in EDF-803 or RPT-12 and the D001 characteristic has been removed from the filter IOCs 335, 338, and 490 in INEL-95/0280. Nitrates are also not listed for the similar waste, IOC 292.	
290	Filter and Off-Gas Sludge (MW)	RFP	369, 413, 421, 803-Rev7, RAV	Trichloroethane, 1,1,1- = TCA	17			17	0	0	0.002	Characteristic: Toxic	
290	Filter and Off-Gas Sludge (MW)	RFP	CLM	Waste Description: Sludge generated from the incinerator off-gas system, recovery building filter plenums, pumps, etc.	N/A	N/A	N/A	N/A	N/A	N/A			
290	Filter and Off-Gas Sludge (MW)	RFP	369, 413, 421, 803-Rev7, RAV	Xylene = C6H4(CH3)2 = Dimethyl benzene	16			16	0	0	0.001	Characteristic: Ignitable	
292	Cemented Sludge (MW)	RFP	12, 280, CLM, 803-Rev7	Acid	2			2	0	0		Note for RGN: Used RGN 2 for Acids, Mineral, Oxidizing because it's the worst case. Note for RGN: See INEL-95/0280 Acceptable Knowledge - Sampling and analysis indicated that free liquids were aqueous with a pH of 10.85 to 12 and the report does not list this waste as D002 (although still listed as corrosive in EDF-803 and RPT-12).	D002, D004-D011, D022, F001-F003 F005- F007, F009
292	Cemented Sludge (MW)	RFP	280, 803-Rev7	Acetone = Dimethyl ketone	19			19	0	0	1 ppmv	New constituent identified (per EDF-803, Rev 7). Mean sludge HSG analytical data.	
292	Cemented Sludge (MW)	RFP	280, 803-Rev7	Arsenic = As	24			24	0	0	8.00E-04	Mean sludge solids analytical data.	
292	Cemented Sludge (MW)	RFP	280, 803-Rev7	Barium = Ba	21	24	107	24	0	0	0.02	Mean sludge solids analytical data.	
292	Cemented Sludge (MW)	RFP	280, 803-Rev7	Benzene	16			16	0	0	4.00E-05	New constituent identified (per EDF-803, Rev 7). Mean sludge solids analytical data.	
292	Cemented Sludge (MW)	RFP	280, 369, 413, 421, 803-Rev7, RAV	Butanol = Butyl Alcohol = C4H9OH	4			4	0	0	0.5 ppmv	Mean sludge HSG analytical data.	
292	Cemented Sludge (MW)	RFP	280, 369, 413, 421, 803-Rev7, RAV	Cadmium = Cd	23	24		24	0	0	0.01	Mean sludge solids analytical data.	
292	Cemented Sludge (MW)	RFP	280, 369, 413, 421, 803-Rev7, RAV	Carbon Tetrachloride = CCl4 = Tetrachloromethane	17			17	0	0	2.00E-04	Mean sludge solids analytical data.	
292	Cemented Sludge (MW)	RFP	280, 803-Rev7	Chloroform = Trichloromethane	17			17	0	0	6.00E-05	New constituent identified (per EDF-803, Rev 7). Mean sludge solids analytical data.	

292	Cemented Sludge (MW)	RFP	280, 803-Rev7	Chromium = Cr	23	24		24	0	0	0.006	Mean sludge solids analytical data.	
292	Cemented Sludge (MW)	RFP	280, 803-Rev7	Cyanide cleaning bath solutions	11			11	0	0		New constituent identified (per EDF-803, Rev 7). See INEL-96/0280 Acceptable Knowledge: Only trace CN concentrations are expected.	
292	Cemented Sludge (MW)	RFP	280, 803-Rev7	Cyanide plating bath solutions	11			11	0	0		New constituent identified (per EDF-803, Rev 7). See INEL-96/0280 Acceptable Knowledge Only trace CN concentrations are expected.	
292	Cemented Sludge (MW)	RFP	12, 280, 803-Rev7, RAV	Corrosive	10			10	0	0		Note for RGN: See INEL-96/0280 Acceptable Knowledge - Nonrepresentative samples of free liquids indicated a pH range of 10.85 to 13 and the report does not list this waste as corrosive. (However, EDF-803 and RPT-12 do list this waste as corrosive.)	
292	Cemented Sludge (MW)	RFP	280, 803-Rev7	Electroplating sludges	11	24		11	0	0		New constituent identified (per EDF-803, Rev 7). See INEL-96/0280 Acceptable Knowledge: Only trace CN concentrations are expected.	
292	Cemented Sludge (MW)	RFP	280, 369, 413, 421, 803-Rev7, RAV	Freon = 1,1,2-Trichloro-1,2,2-Trifluoroethane	17			17	0	0	2 ppmv	Mean sludge HSG analytical data.	
292	Cemented Sludge (MW)	RFP	280, 369, 413, 421, 803-Rev7, RAV	Lead = Pb	23	24		24	0	0	0.03	Mean sludge solids analytical data.	
292	Cemented Sludge (MW)	RFP	280, 803-Rev7	Mercury = Hg	24			24	0	0	6.00E-05	Mean sludge solids analytical data.	
292	Cemented Sludge (MW)	RFP	280, 369, 413, 421, 803-Rev7, RAV	Methanol = Methyl Alcohol = CH3OH	4			4	0	0	5 ppmv	Mean sludge HSG analytical data.	
292	Cemented Sludge (MW)	RFP	280, 369, 413, 421, 803-Rev7, RAV	Methylene Chloride = CH2Cl2 = Dichloromethane	17			17	0	0	1 ppmv	Mean sludge HSG analytical data.	
292	Cemented Sludge (MW)	RFP	12, 280, 413, 803-Rev7	Nitrates	104			104	0	0		Note for RGN: See INEL-96/0280 Acceptable Knowledge - Does not meet the definition of ignitability as defined in 40 CFR 261.21. Nitrates are not listed in EDF-803 or RPT-12.	
292	Cemented Sludge (MW)	RFP	CLM	Oil-On	0			0	0	0			
292	Cemented Sludge (MW)	RFP	280, 803-Rev7	Perclene = Perchloroethylene = Tetrachloroethene, 1,1,2,2-	17			17	0	0	6.00E-05	New constituent identified (per EDF-803, Rev 7). Mean sludge solids analytical data.	
292	Cemented Sludge (MW)	RFP	CLM	Portland Cement	0			0	0	0			
292	Cemented Sludge (MW)	RFP	280, 803-Rev7	Selenium = Se	22	23	24	24	0	0	1.00E-04	Mean sludge solids analytical data.	
292	Cemented Sludge (MW)	RFP	280, 803-Rev7	Silver = Ag	24			24	0	0	1.00E-04	Mean sludge solids analytical data.	
292	Cemented Sludge (MW)	RFP	280, 803-Rev7	Toluene = Toluol = Methylbenzene	16			16	0	0	17 ppmv	Mean sludge HSG analytical data.	
292	Cemented Sludge (MW)	RFP	280, 369, 413, 421, 803-Rev7, RAV	Trichloroethane, 1,1,1- = TCA	17			17	0	0	19 ppmv	Mean sludge HSG analytical data.	
292	Cemented Sludge (MW)	RFP	280, 803-Rev7	Trichloroethylene = Trichloroethene = TCE	17			17	0	0	6.00E-05	New constituent identified (per EDF-803, Rev 7). Mean sludge solids analytical data.	
292	Cemented Sludge (MW)	RFP	CLM	Vermiculite	0			0	0	0			
292	Cemented Sludge (MW)	RFP	CLM	Waste Description: Sludge generated from the incinerator off-gas system, recovery building filter plenums, pumps, etc. Portland cement added to absorb free liquids	N/A	N/A	N/A	N/A	N/A	N/A			
293	Cemented Sludge (MW)	RFP	280, 369, 413, 421, 803-Rev7, RAV	Xylene = C6H4(CH3)2 = Dimethyl benzene	16			16	0	0	0.5 ppmv	Mean sludge HSG analytical data.	
300	Graphite Molds (MW)	RFP	280, RAV	Benzene	16			16	0	0	0.3 ppmv	Mean HSG analytical data.	D006, D029, D040, F001, F002, F005
300	Graphite Molds (MW)	RFP	280, RAV	Carbon Tetrachloride = CCl4 = Tetrachloromethane	17			17	0	0	0.08 ppmv	Mean HSG analytical data.	
300	Graphite Molds (MW)	RFP	280, RAV	Chloroform = Trichloromethane	17			17	0	0	0.3 ppmv	Mean HSG analytical data.	
300	Graphite Molds (MW)	RFP	280, CLM	Combustibles	101			101	0	0		Note for RGN: See INEL-96/0280 Acceptable Knowledge - Does not meet the definition of ignitability as defined in 40 CFR 261.21. Note for RGN: See NCO Response to EPA ID#AB9008852- Casual or incidental nitration of cellulose is unlikely. Oxidation of organics (rather than nitration), more likely.	
300	Graphite Molds (MW)	RFP	280, RAV	Dichloroethane, 1,2- = (Ethylene dichloride)	17			17	0	0	0.1 ppmv	Mean HSG analytical data.	
300	Graphite Molds (MW)	RFP	280, 803-Rev7	Dichloroethene, 1,1- = Dichloroethylene, 1,1-	17			17	0	0	1 ppmv	Mean HSG analytical data.	
300	Graphite Molds (MW)	RFP	280, RAV	Freon = 1,1,2-Trichloro-1,2,2-Trifluoroethane	17			17	0	0	0.05 ppmv	Mean HSG analytical data.	
300	Graphite Molds (MW)	RFP	CLM	Graphite	0			0	0	0			
300	Graphite Molds (MW)	RFP	803-Rev7	Lead = Pb	23	24		23	0	0			
300	Graphite Molds (MW)	RFP	280, RAV	Methanol = Methyl Alcohol = CH3OH	4			4	0	0	4 ppmv	Mean HSG analytical data.	
300	Graphite Molds (MW)	RFP	280, RAV	Methylene Chloride = CH2Cl2 = Dichloromethane	17			17	0	0	1 ppmv	Mean HSG analytical data.	
300	Graphite Molds (MW)	RFP	CLM	Nitric Acid = HNO3	2			2	0	0			
300	Graphite Molds (MW)	RFP	CLM	Oil-On	0			0	0	0			
300	Graphite Molds (MW)	RFP	280, RAV	Perclene = Perchloroethylene = Tetrachloroethene, 1,1,2,2-	17			17	0	0	0.2 ppmv	Mean HSG analytical data.	
300	Graphite Molds (MW)	RFP	280, RAV	Toluene = Toluol = Methylbenzene	16			16	0	0	1 ppmv	Mean HSG analytical data.	
300	Graphite Molds (MW)	RFP	280, 421, 803-Rev7, RAV	Trichloroethane, 1,1,1- = TCA	17			17	0	0	20 ppmv	Mean HSG analytical data.	
300	Graphite Molds (MW)	RFP	280, 803-Rev7	Trichloroethylene = Trichloroethene = TCE	17			17	0	0	5 ppmv	Mean HSG analytical data.	
300	Graphite Molds (MW)	RFP	CLM	Vermiculite	0			0	0	0			
300	Graphite Molds (MW)	RFP	CLM	Waste Description: Graphite molds used in casting plutonium metal.	N/A	N/A	N/A	N/A	N/A	N/A			

301	Graphite Cores (MW)	RFP	280, CLM	Combustibles	101			101	0	0		Note for RGN: See INEL-96/0280 Acceptable Knowledge - Does not meet the definition of ignitability as defined in 40 CFR 261.21. Note for RGN: See NOD Response to EPA ID4890008952- Casual or incidental nitration of cellulose is unlikely. Oxidation of organics (rather than nitration), more likely.	D008, D029, D040, F001, F002, F005
301	Graphite Cores (MW)	RFP	280, 803-Rev7	Dichloroethane, 1,1- = Dichloroethylene, 1,1-	17			17	0	0	1 ppmv	Mean HSG analytical data.	
301	Graphite Cores (MW)	RFP	CLM	Graphite	0			0	0	0			
301	Graphite Cores (MW)	RFP	803-Rev7	Lead = Pb	23	24		23	0	0			
301	Graphite Cores (MW)	RFP	280, 803-Rev7	Methylene Chloride = CH2Cl2 = Dichloromethane	17			17	0	0	1 ppmv	Mean HSG analytical data.	
301	Graphite Cores (MW)	RFP	280, CLM	Nitric Acid = HNO3	2			2	0	0		Note for RGN: See INEL-96/0280 Acceptable Knowledge - The material in this waste group does not meet the definition of ignitability.	
301	Graphite Cores (MW)	RFP	CLM	Oil-Dri	0			0	0	0			
301	Graphite Cores (MW)	RFP	280, 803-Rev7	Toluene = Toluol = Methylbenzene	16			16	0	0	1 ppmv	Mean HSG analytical data.	
301	Graphite Cores (MW)	RFP	280, 421, 803-Rev7, RAV	Trichloroethane, 1,1,1- = TCA	17			17	0	0	20 ppmv	Mean HSG analytical data.	
301	Graphite Cores (MW)	RFP	280, 803-Rev7	Trichloroethylene = Trichloroethene = TCE	17			17	0	0	5 ppmv	New constituent identified (per EDF-803, Rev 7). Mean HSG analytical data.	
301	Graphite Cores (MW)	RFP	CLM	Vermiculite	0			0	0	0			
301	Graphite Cores (MW)	RFP	CLM	Waste Description: Graphite molds and cores used in casting plutonium metal.	N/A	N/A	N/A	N/A	N/A	N/A			
302	Benelex and Plexiglas (MW)	RFP	803-Rev7	Barium = Ba	21	24	107	24	0	0			D005, D008, F001
302	Benelex and Plexiglas (MW)	RFP	280, CLM	Benelex	101			101	0	0		Note for RGN: See INEL-96/0280 Acceptable Knowledge - Does not meet the definition of ignitability as defined in 40 CFR 261.21. Note for RGN: See NOD Response to EPA ID4890008952- Casual or incidental nitration of cellulose is unlikely. Oxidation of organics (rather than nitration), more likely.	
302	Benelex and Plexiglas (MW)	RFP	12, 280, 421, 803-Rev7, RAV	Carbon Tetrachloride = CCl4 = Tetrachloromethane	17			17	0	0		Organic solvents used to decontaminate this material are not regulated as toxic or listed wastes and should be present in trace quantities per INEL-96/0280. However, this does not agree with EDF-803 or RPT-12, which list this waste as F001. Organic solvents assumed to be present in trace quantities.	
302	Benelex and Plexiglas (MW)	RFP	280, CLM	Combustibles	101			101	0	0		Note for RGN: See INEL-96/0280 Acceptable Knowledge - Does not meet the definition of ignitability as defined in 40 CFR 261.21. Note for RGN: See NOD Response to EPA ID4890008952- Casual or incidental nitration of cellulose is unlikely. Oxidation of organics (rather than nitration), more likely.	
302	Benelex and Plexiglas (MW)	RFP	CLM	Fire-retardant paint	0			0	0	0			
302	Benelex and Plexiglas (MW)	RFP	280, 413, 421, 803-Rev7, CLM, RAV	Lead = Pb	23	24		23	0	0	25		
302	Benelex and Plexiglas (MW)	RFP	CLM	Methyl methacrylate (Plexiglass)	0			0	0	0			
302	Benelex and Plexiglas (MW)	RFP	CLM	Oil-Dri	0			0	0	0			
302	Benelex and Plexiglas (MW)	RFP	280, CLM	Rubber gaskets	101			101	0	0		Note for RGN: See INEL-96/0280 Acceptable Knowledge - Does not meet the definition of ignitability as defined in 40 CFR 261.21. Note for RGN: See NOD Response to EPA ID4890008952- Casual or incidental nitration of cellulose is unlikely. Oxidation of organics (rather than nitration), more likely.	
302	Benelex and Plexiglas (MW)	RFP	12, 280, 803-Rev7	Toluene = Toluol = Methylbenzene	16			16	0	0		Organic solvents used to decontaminate this material are not regulated as toxic or listed wastes and should be present in trace quantities per INEL-96/0280. However, this does not agree with EDF-803 or RPT-12, which list this waste as F001. Organic solvents assumed to be present in trace quantities.	
302	Benelex and Plexiglas (MW)	RFP	12, 280, 421, 803-Rev7, RAV	Trichloroethane, 1,1,1- = TCA	17			17	0	0		Organic solvents used to decontaminate this material are not regulated as toxic or listed wastes and should be present in trace quantities per INEL-96/0280. However, this does not agree with EDF-803 or RPT-12, which list this waste as F001. Organic solvents assumed to be present in trace quantities.	
302	Benelex and Plexiglas (MW)	RFP	12, 280, 421, 803-Rev7, RAV	Trichloroethylene = Trichloroethene = TCE	17			17	0	0		Organic solvents used to decontaminate this material are not regulated as toxic or listed wastes and should be present in trace quantities per INEL-96/0280. However, this does not agree with EDF-803 or RPT-12, which list this waste as F001. Organic solvents assumed to be present in trace quantities.	
302	Benelex and Plexiglas (MW)	RFP	CLM	Vermiculite	0			0	0	0			
302	Benelex and Plexiglas (MW)	RFP	CLM	Waste Description: Benelex - used for neutron shielding. Plexiglass glovebox windows. Lead sheeting (1/8 to 1/4 in thick) may be attached to some Benelex pieces. Benelex was usually coated with fire-retarded paint. Leaded glass may also be present.	N/A	N/A	N/A	N/A	N/A	N/A			
303	Scarfed Graphite Chunks (MW)	RFP	280, 803-Rev7	Dichloroethane, 1,1- = Dichloroethylene, 1,1-	17			17	0	0	1 ppmv	Mean HSG analytical data.	D008, D029, D040, F001, F002, F005
303	Scarfed Graphite Chunks (MW)	RFP	803-Rev7	Lead = Pb	23	24		23	0	0			
303	Scarfed Graphite Chunks (MW)	RFP	280, 803-Rev7	Methylene Chloride = CH2Cl2 = Dichloromethane	17			17	0	0	1 ppmv	Mean HSG analytical data.	
303	Scarfed Graphite Chunks (MW)	RFP	280, 803-Rev7	Toluene = Toluol = Methylbenzene	16			16	0	0	1 ppmv	Mean HSG analytical data.	
303	Scarfed Graphite Chunks (MW)	RFP	280, 803-Rev7	Trichloroethane, 1,1,1- = TCA	17			17	0	0	20 ppmv	New constituent identified (per EDF-803, Rev 7). Mean HSG analytical data.	
303	Scarfed Graphite Chunks (MW)	RFP	280, 803-Rev7	Trichloroethylene = Trichloroethene = TCE	17			17	0	0	5 ppmv	Mean HSG analytical data.	
303	Scarfed Graphite Chunks (MW)	RFP	300	Waste Description: Similar to Code 300. Graphite is "scarfed" to remove excess plutonium prior to packaging for disposal.	N/A	N/A	N/A	N/A	N/A	N/A			
310	Graphite Scarfings (ROW)	RFP	12, 280, 803-Rev7, CLM	Waste Description: Scarfings from scraping graphite molds to remove adhered plutonium.	None	None	None	None	None	None		ROW assumed to have no RGNs. Listed as ROW in EDF-803 and RPT-12. However, INEL-96/0280 shows IDC 310 with HWNs D008, D029, D040, F001, F002, F005.	None

311	Graphite Heels (ROW, per RPT-12)	RFP	12, 280, 803-Rev7, CLM	Waste Description: Graphite heels are the remaining insoluble residue from leaching graphite scarfings with hot nitric acid.	None	None	None	None	None	None		Note for RGN: This IDC is listed in EDF-803 as "unknown" wrt HWNs, but RPT-12 states that since this waste was derived from the leaching of ROW IDC 310, it should also be ROW. INEL-96/0280 does not list the waste IDC. ROW assumed to have no RGNs.	None (Unknown in EDF-803)
312	Graphite, Course (MW)	RFP	280, 803-Rev7	Dichloroethene, 1,1- = Dichloroethylene, 1,1-	17			17	0	0	1 ppmw	Mean HSG analytical data.	D008, D029, D040, F001, F002, F005
312	Graphite, Course (MW)	RFP	803-Rev7	Lead = Pb	23	24		23	0	0			
312	Graphite, Course (MW)	RFP	280, 421, 803-Rev7, RAV	Methylene Chloride = CH2Cl2 = Dichloromethane	17			17	0	0	1 ppmw	Mean HSG analytical data.	
312	Graphite, Course (MW)	RFP	280, 803-Rev7	Toluene = Toluol = Methylbenzene	16			16	0	0	1 ppmw	Mean HSG analytical data.	
312	Graphite, Course (MW)	RFP	280, 421, 803-Rev7, RAV	Trichloroethane, 1,1,1- = TCA	17			17	0	0	20 ppmw	Mean HSG analytical data.	
312	Graphite, Course (MW)	RFP	280, 803-Rev7	Trichloroethylene = Trichloroethene = TCE	17			17	0	0	5 ppmw	Mean HSG analytical data.	
312	Graphite, Course (MW)	RFP	369	Waste Description: Similar to Code 300. Graphite is 'scarfed' to remove excess plutonium prior to packaging for disposal.	N/A	N/A	N/A	N/A	N/A	N/A			
320	Heavy Non-SS (Special Source) Metals (Ta, W, Pt, Pb) (MW)	RFP	12, 280, 803-Rev7, RAV	Carbon Tetrachloride = CCl4 = Tetrachloromethane	17			17	0	0	0.07 ppmw	Mean HSG analytical data. Note: EDF-803/RPT-12 list HWNs D008, F001, F002, F005; INEL-96-0280 lists only D008/D009 and states that CDPHE has ruled that materials decontaminated with solvents are not regulated as listed HWs.	D008, F001, F002, F005
320	Heavy Non-SS (Special Source) Metals (Ta, W, Pt, Pb) (MW)	RFP	280, 803-Rev7, RAV	Freon = 1,1,2-Trichloro-1,2,2-Trifluoroethane	17			17	0	0	0.2 ppmw	Mean HSG analytical data.	
320	Heavy Non-SS (Special Source) Metals (Ta, W, Pt, Pb) (MW)	RFP	369, 413, 421, 803-Rev7, CLM, RAV	Lead = Pb	23	24		23	0	0	5	Characteristic: EP Toxic	
320	Heavy Non-SS (Special Source) Metals (Ta, W, Pt, Pb) (MW)	RFP	280, 803-Rev7, RAV	Methylene Chloride = CH2Cl2 = Dichloromethane	17			17	0	0	0.7 ppmw	Mean HSG analytical data.	
320	Heavy Non-SS (Special Source) Metals (Ta, W, Pt, Pb) (MW)	RFP	CLM	Oil-Dri	0			0	0	0			
320	Heavy Non-SS (Special Source) Metals (Ta, W, Pt, Pb) (MW)	RFP	CLM	Platinum = Pt	23			23	0	0			
320	Heavy Non-SS (Special Source) Metals (Ta, W, Pt, Pb) (MW)	RFP	280, CLM	Sulfamic/nitric acid	2			2	0	0		Note for RGN: See INEL-96/0280 Acceptable Knowledge - The material in this waste group does not meet the definition of ignitability.	
320	Heavy Non-SS (Special Source) Metals (Ta, W, Pt, Pb) (MW)	RFP	CLM	Tantalum = Ta	23			23	0	0			
320	Heavy Non-SS (Special Source) Metals (Ta, W, Pt, Pb) (MW)	RFP	280, 803-Rev7	Toluene = Toluol = Methylbenzene	16			16	0	0	5 ppmw	Mean HSG analytical data.	
320	Heavy Non-SS (Special Source) Metals (Ta, W, Pt, Pb) (MW)	RFP	280, RAV	Trichloroethane, 1,1,1- = TCA	17			17	0	0	7 ppmw	Mean HSG analytical data.	
320	Heavy Non-SS (Special Source) Metals (Ta, W, Pt, Pb) (MW)	RFP	CLM	Tungsten = W	23			23	0	0			
320	Heavy Non-SS (Special Source) Metals (Ta, W, Pt, Pb) (MW)	RFP	CLM	Vermiculite	0			0	0	0			
320	Heavy Non-SS (Special Source) Metals (Ta, W, Pt, Pb) (MW)	RFP	CLM	Waste Description: Tantalum crucibles, funnels, funnel inserts, pour rods. Tungsten, platinum, lead.	N/A	N/A	N/A	N/A	N/A	N/A			
321	Lead (MW)	RFP	803-Rev7	Barium = Ba	21	24	107	24	0	0			D008
321	Lead (MW)	RFP	803-Rev7	Cadmium = Cd	23	24		24	0	0			
321	Lead (MW)	RFP	12, 280, 803-Rev7	Corrosive	2			2	0	0		Note for RGNs: Acids, probably from trace rinsings. Used RGN 2 for Acids, Mineral, Oxidizing because it's the worst case. Note for RGN: See INEL-96/0280 Acceptable Knowledge - D002 corrosive listing due to presence of lead acid batteries, but this waste is not listed as D002 in RPT-12.	
321	Lead (MW)	RFP	803-Rev7	Lead = Pb	23	24		23	0	0			
328	Filters, Full-Flo, from Incinerator	RFP	803-Rev7	Barium = Ba	21	24	107	24	0	0			D002, D005, D007, D008, D011, F001-F003, F005
328	Filters, Full-Flo, from Incinerator	RFP	280, 369, 413, 421, 803-Rev7, RAV	Carbon Tetrachloride = CCl4 = Tetrachloromethane	17			17	0	0	0.002	Organic solvents assumed to be present in trace quantities, similar to those given in INEL-96/0280 for IDCs 335, 376, and 480.	
328	Filters, Full-Flo, from Incinerator	RFP	803-Rev7	Chromium = Cr	23	24		24	0	0			
328	Filters, Full-Flo, from Incinerator	RFP	369, 413, 421, 803-Rev7, RAV	Freon = 1,1,2-Trichloro-1,2,2-Trifluoroethane	17			17	0	0	0.001	Characteristic: Toxic	
328	Filters, Full-Flo, from Incinerator	RFP	803-Rev7	Lead = Pb	23	24		24	0	0			
328	Filters, Full-Flo, from Incinerator	RFP	369, 413, 421, 803-Rev7, RAV	Methylene Chloride = CH2Cl2 = Dichloromethane	17			17	0	0	0.001	Characteristic: Toxic	
328	Filters, Full-Flo, from Incinerator	RFP	12, 280, 369, 803-Rev7	Nitric Acid = HNO3	2			2	0	0		INEL-96/0280 states that this waste is not D002 corrosive and that nonrepresentative free liquids from this waste had pH < 12 (although still listed as corrosive in EDF-803 and RPT-12).	
328	Filters, Full-Flo, from Incinerator	RFP	803-Rev7	Silver = Ag	24			24	0	0			
328	Filters, Full-Flo, from Incinerator	RFP	280, 803-Rev7	Toluene = Toluol = Methylbenzene	16			16	0	0		Note for RGN: See INEL-96/0280 Acceptable Knowledge - free liquids were determined to be aqueous.	
328	Filters, Full-Flo, from Incinerator	RFP	369, 413, 421, 803-Rev7, RAV	Trichloroethane, 1,1,1- = TCA	17			17	0	0	0.002	Characteristic: Toxic	
328	Filters, Full-Flo, from Incinerator	RFP	369	Waste Description: Fibrous polypropylene filter media that was used to filterparticulates from the liquid stream from the caustic scrubber on the off-gas of the Plutonium Recovery Incinerator.	N/A	N/A	N/A	N/A	N/A	N/A			
328	Filters, Full-Flo, from Incinerator	RFP	280, 803-Rev7	Xylene = C6H4(CH3)2 = Dimethyl benzene	16			16	0	0		Note for RGN: See INEL-96/0280 Acceptable Knowledge - free liquids were determined to be aqueous.	
330	Paper and Rags-Dry (MW)	RFP	280, 803-Rev7	Acetone = Dimethyl ketone	19			19	0	0	29 ppmw	New constituent identified (per EDF-803, Rev 7). Mean HSG analytical data.	D006-D009, D011, D022, F001-F003, F005-F007, F009

330	Paper and Rags-Dry (MW)	RFP	280, 803-Rev7, RAV	Benzene	16			16	0	0	1 ppmv	Mean HSG analytical data.	
330	Paper and Rags-Dry (MW)	RFP	803-Rev7	Cadmium = Cd	23	24		24	0	0			
330	Paper and Rags-Dry (MW)	RFP	803-Rev7	Carbon disulfide = carbon bisulfide	20			20	0	0		New constituent identified (per EDF-803, Rev 7). CS2 concentration epxected to be minimal.	
330	Paper and Rags-Dry (MW)	RFP	280, 369, 413, 421, 803-Rev7, RAV	Carbon Tetrachloride = CCl4 = Tetrachloromethane	17			17	0	0	440 ppmv	Mean HSG analytical data.	
330	Paper and Rags-Dry (MW)	RFP	280, 803-Rev7, RAV	Chloroform = Trichloromethane	17			17	0	0	13 ppmv	Mean HSG analytical data.	
330	Paper and Rags-Dry (MW)	RFP	803-Rev7	Chromium = Cr	23	24		24	0	0			
330	Paper and Rags-Dry (MW)	RFP	280, CLM	Clothing	101			101	0	0		Note for RGN: See INEL-96/0280 Acceptable Knowledge - May exhibit the characteristic of ignitability due to cellulosic materials contaminated with nitrate salts. Note for RGN: See NOD Response to EPA ID4890008952- Casual or incidental nitration of cellulose is unlikely. Oxidation of organics (rather than nitration), more likely.	
330	Paper and Rags-Dry (MW)	RFP	280, 803-Rev7	Cyanide cleaning bath solutions	11			11	0	0		Note for RGN: See INEL-96/0280 Acceptable Knowledge - Materials contain only trace quantities of CN and are not reactive.	
330	Paper and Rags-Dry (MW)	RFP	280, 803-Rev7	Cyanide plating bath solutions	11			11	0	0		Note for RGN: See INEL-96/0280 Acceptable Knowledge - Materials contain only trace quantities of CN and are not reactive.	
330	Paper and Rags-Dry (MW)	RFP	280, 803-Rev7	Cyclohexane	29			29	0	0	1 ppmv	Mean HSG analytical data.	
330	Paper and Rags-Dry (MW)	RFP	280, RAV	Dichloroethene, 1,1- = Dichloroethylene, 1,1-	17			17	0	0	2 ppmv	Mean HSG analytical data.	
330	Paper and Rags-Dry (MW)	RFP	280, 803-Rev7, RAV	Ethyl benzene = Phenylethane	16			16	0	0	3 ppmv	Mean HSG analytical data.	
330	Paper and Rags-Dry (MW)	RFP	280, 369, 413, 421, 803-Rev7, RAV	Freon = 1,1,2-Trichloro-1,2,2-Trifluoroethane	17			17	0	0	72 ppmv	Mean HSG analytical data.	
330	Paper and Rags-Dry (MW)	RFP	421, 803-Rev7, CLM, RAV	Lead = Pb	23	24		23	0	0		Characteristic: EP Toxic	
330	Paper and Rags-Dry (MW)	RFP	803-Rev7	Mercury = Hg	24			24	0	0		New constituent identified (per EDF-803, Rev 7)	
330	Paper and Rags-Dry (MW)	RFP	280, 803-Rev7	Methanol = Methyl Alcohol = CH3OH	4			4	0	0	72 ppmv	New constituent identified (per EDF-803, Rev 7). Mean HSG analytical data.	
330	Paper and Rags-Dry (MW)	RFP	280, 369, 413, 421, 803-Rev7, RAV	Methylene Chloride = CH2Cl2 = Dichloromethane	17			17	0	0	68 ppmv	Mean HSG analytical data.	
330	Paper and Rags-Dry (MW)	RFP	CLM	Oil-Dri	0			0	0	0			
330	Paper and Rags-Dry (MW)	RFP	280, CLM	Paper	101			101	0	0		Note for RGN: See INEL-96/0280 Acceptable Knowledge - May exhibit the characteristic of ignitability due to cellulosic materials contaminated with nitrate salts. Note for RGN: See NOD Response to EPA ID4890008952- Casual or incidental nitration of cellulose is unlikely. Oxidation of organics (rather than nitration), more likely.	
330	Paper and Rags-Dry (MW)	RFP	280, 803-Rev7, RAV	Perclene = Perchloroethylene = Tetrachloroethene, 1,1,2,2-	17			17	0	0	7 ppmv	Mean HSG analytical data.	
330	Paper and Rags-Dry (MW)	RFP	803-Rev7	Silver = Ag	24			24	0	0			
330	Paper and Rags-Dry (MW)	RFP	280, 803-Rev7, RAV	Toluene = Toluol = Methylbenzene	16			16	0	0	17 ppmv	Mean HSG analytical data.	
330	Paper and Rags-Dry (MW)	RFP	280, 369, 413, 421, 803-Rev7, RAV	Trichloroethane, 1,1,1- = TCA	17			17	0	0	180 ppmv	Mean HSG analytical data.	
330	Paper and Rags-Dry (MW)	RFP	280, 803-Rev7, RAV	Trichloroethylene = Trichloroethene = TCE	17			17	0	0	250 ppmv	Mean HSG analytical data.	
330	Paper and Rags-Dry (MW)	RFP	CLM	Vermiculite	0			0	0	0			
330	Paper and Rags-Dry (MW)	RFP	CLM	Waste Description: Combustibles: paper, rags, plastics, cloth overalls, booties, cardboard, wood, polyethylene bottles, laundry lint. Some glass, concrete, cement, batteries, scrap metal. Damp or moist combustible wastes may also be present.	N/A	N/A	N/A	N/A	N/A	N/A			
330	Paper and Rags-Dry (MW)	RFP	280, CLM	Wood	101			101	0	0		Note for RGN: See INEL-96/0280 Acceptable Knowledge - May exhibit the characteristic of ignitability due to cellulosic materials contaminated with nitrate salts. Note for RGN: See NOD Response to EPA ID4890008952- Casual or incidental nitration of cellulose is unlikely. Oxidation of organics (rather than nitration), more likely.	
330	Paper and Rags-Dry (MW)	RFP	280, 803-Rev7, RAV	Xylene = C6H4(CH3)2 = Dimethyl benzene	16			16	0	0	8 ppmv	Mean HSG analytical data.	
335	Absolute 8 x 8 Filters (MW)	RFP	280, CLM	Absolute filters	101			101	0	0		Note for RGN: Possibility of spontaneous combustion due to nitrate salts no longer applies. (See Acceptable Knowledge Document for INEEL Stored Transuranic Waste--Rocky Flats Plant Waste. Revision 3, INEL-96-0280, February 2003.)	D005, D007, D008, D009, D011, D022, F001, F002, F005-F007, F009
335	Absolute 8 x 8 Filters (MW)	RFP	280, RAV	Acetone = Dimethyl ketone	19			19	0	0	27 ppmv	Mean HSG analytical data.	
335	Absolute 8 x 8 Filters (MW)	RFP	803-Rev7	Arsenic = As	24			24	0	0			
335	Absolute 8 x 8 Filters (MW)	RFP	803-Rev7, RAV	Asbestos	0			0	0	0	45		
335	Absolute 8 x 8 Filters (MW)	RFP	803-Rev7	Barium = Ba	21	24	107	24	0	0			
335	Absolute 8 x 8 Filters (MW)	RFP	280, 803-Rev7, RAV	Benzene	16			16	0	0	1 ppmv	Mean HSG analytical data.	
335	Absolute 8 x 8 Filters (MW)	RFP	803-Rev7	Cadmium = Cd	23	24		24	0	0			
335	Absolute 8 x 8 Filters (MW)	RFP	280, 369, 413, 421, 803-Rev7, RAV	Carbon Tetrachloride = CCl4 = Tetrachloromethane	17			17	0	0	100 ppmv	Mean HSG analytical data.	
335	Absolute 8 x 8 Filters (MW)	RFP	280, 803-Rev7, RAV	Chloroform = Trichloromethane	17			17	0	0	0.9 ppmv	Mean HSG analytical data.	
335	Absolute 8 x 8 Filters (MW)	RFP	803-Rev7	Chromium = Cr	23	24		24	0	0			

335	Absolute 8 x 8 Filters (MW)	RFP	280, 803-Rev7	Cyanide	11			11	0	0		Note for RGN: See INEL-96/0280 Acceptable Knowledge - The materials may contain trace amounts of cyanides but are not capable of detonation or explosive reaction.	
335	Absolute 8 x 8 Filters (MW)	RFP	280, 803-Rev7	Cyanide cleaning bath solutions	11			11	0	0		Note for RGN: See INEL-96/0280 Acceptable Knowledge - The materials may contain trace amounts of cyanides but are not capable of detonation or explosive reaction.	
335	Absolute 8 x 8 Filters (MW)	RFP	280, 803-Rev7	Cyanide plating bath solutions	11			11	0	0		Note for RGN: See INEL-96/0280 Acceptable Knowledge - The materials may contain trace amounts of cyanides but are not capable of detonation or explosive reaction.	
335	Absolute 8 x 8 Filters (MW)	RFP	280, RAV	Dichloroethane, 1,2- = (Ethylene dichloride)	17			17	0	0	0.3 ppmv	Mean HSG analytical data.	
335	Absolute 8 x 8 Filters (MW)	RFP	280, RAV	Dichloroethene, 1,1- = Dichloroethylene, 1,1-	17			17	0	0	0.5 ppmv	Mean HSG analytical data.	
335	Absolute 8 x 8 Filters (MW)	RFP	280, 369, 413, 421, 803-Rev7, RAV	Freon = 1,1,2-Trichloro-1,2,2-Trifluoroethane	17			17	0	0	80 ppmv	Mean HSG analytical data.	
335	Absolute 8 x 8 Filters (MW)	RFP	280, 803-Rev7, CLM	Lead = Pb	23	24		24	0	0		Note for RGN: See INEL-96/0280 Acceptable Knowledge - Filters from Bldg 771 are contaminated with lead and barium.	
335	Absolute 8 x 8 Filters (MW)	RFP	803-Rev7	Mercury = Hg	24			24	0	0			
335	Absolute 8 x 8 Filters (MW)	RFP	280, 369, 413, 421, 803-Rev7, RAV	Methylene Chloride = CH2Cl2 = Dichloromethane	17			17	0	0	11 ppmv	Mean HSG analytical data.	
335	Absolute 8 x 8 Filters (MW)	RFP	12, 280, 413, 803-Rev7, CLM	Nitric Acid = HNO3	2			2	0	0		Note for RGN: Possibility of spontaneous combustion due to nitrate salts no longer applies. (See Acceptable Knowledge Document for INEEL Stored Transuranic Waste--Rocky Flats Plant Waste, Revision 3, INEL-96-0280, February 2003.) IDC 335 was also specified to be nonacid-contaminated fibers, it is not classified as D001 waste for nitrates in RPT-12, although it is D001 in EDF-803.	
335	Absolute 8 x 8 Filters (MW)	RFP	CLM	Oil-Dri	0			0	0	0			
335	Absolute 8 x 8 Filters (MW)	RFP	280, 803-Rev7, RAV	Perclene = Perchloroethylene = Tetrachloroethene, 1,1,2,2-	17			17	0	0	0.1 ppmv	Mean HSG analytical data.	
335	Absolute 8 x 8 Filters (MW)	RFP	803-Rev7	Selenium = Se	22	23	24	24	0	0			
335	Absolute 8 x 8 Filters (MW)	RFP	803-Rev7	Silver = Ag	24			24	0	0			
335	Absolute 8 x 8 Filters (MW)	RFP	280, 803-Rev7, RAV	Toluene = Toluol = Methylbenzene	18			18	0	0	20 ppmv	Mean HSG analytical data.	
335	Absolute 8 x 8 Filters (MW)	RFP	280, 369, 413, 421, 803-Rev7, RAV	Trichloroethane, 1,1,1- = TCA	17			17	0	0	41 ppmv	Mean HSG analytical data.	
335	Absolute 8 x 8 Filters (MW)	RFP	280, 803-Rev7, RAV	Trichloroethylene = Trichloroethene = TCE	17			17	0	0	4 ppmv	Mean HSG analytical data.	
335	Absolute 8 x 8 Filters (MW)	RFP	CLM	Waste Description: Absolute fibers, wood or particle board frames. Some surgeons gloves...	N/A	N/A	N/A	N/A	N/A	N/A			
335	Absolute 8 x 8 Filters (MW)	RFP	280, 803-Rev7	Xylene = C6H4(CH3)2 = Dimethyl benzene	18			18	0	0	0.7 ppmv	Mean HSG analytical data.	
336	Moist Paper and Rags (MW)	RFP	280, 803-Rev7, RAV	Acetone = Dimethyl ketone	19			19	0	0	29 ppmv	Mean HSG analytical data.	D002, D006-D009, D011, D022, F001-F003, F005-F007, F009
336	Moist Paper and Rags (MW)	RFP	280, 803-Rev7	Benzene	18			18	0	0	1 ppmv	New constituent identified (per EDF-803, Rev 7). Mean HSG analytical data.	
336	Moist Paper and Rags (MW)	RFP	803-Rev7	Cadmium = Cd	23	24		24	0	0			
336	Moist Paper and Rags (MW)	RFP	280, CLM	Canvas	101			101	0	0		Note for RGN: See INEL-96/0280 Acceptable Knowledge - May exhibit the characteristic of ignitability due to cellulosic materials contaminated with nitrate salts. Note for RGN: See NOD Response to EPA ID4890008952- Casual or incidental nitration of cellulose is unlikely. Oxidation of organics (rather than nitration), more likely.	
336	Moist Paper and Rags (MW)	RFP	803-Rev7	Carbon disulfide = carbon bisulfide	20			20	0	0		New constituent identified (per EDF-803, Rev 7). GS2 concentration expected to be minimal.	
336	Moist Paper and Rags (MW)	RFP	280, 369, 413, 421, 803-Rev7, RAV	Carbon Tetrachloride = CCl4 = Tetrachloromethane	17			17	0	0	440 ppmv	Mean HSG analytical data.	
336	Moist Paper and Rags (MW)	RFP	280, 803-Rev7, RAV	Chloroform = Trichloromethane	17			17	0	0	14 ppmv	Mean HSG analytical data.	
336	Moist Paper and Rags (MW)	RFP	803-Rev7	Chromium = Cr	23	24		24	0	0			
336	Moist Paper and Rags (MW)	RFP	280, 803-Rev7	Cyanide cleaning bath solutions	11			11	0	0		Note for RGN: See INEL-96/0280 Acceptable Knowledge - Materials contain only trace quantities of CN and are not reactive.	
336	Moist Paper and Rags (MW)	RFP	280, 803-Rev7	Cyanide plating bath solutions	11			11	0	0		Note for RGN: See INEL-96/0280 Acceptable Knowledge - Materials contain only trace quantities of CN and are not reactive.	
336	Moist Paper and Rags (MW)	RFP	280, 369, 413, 421, 803-Rev7, RAV	Freon = 1,1,2-Trichloro-1,2,2-Trifluoroethane	17			17	0	0	72 ppmv	Mean HSG analytical data.	
336	Moist Paper and Rags (MW)	RFP	421, 803-Rev7, RAV	Lead = Pb	23	24		23	0	0		Characteristic: EP Toxic	
336	Moist Paper and Rags (MW)	RFP	803-Rev7	Mercury = Hg	24			24	0	0		New constituent identified (per EDF-803, Rev 7).	
336	Moist Paper and Rags (MW)	RFP	CLM	Metal scrap	23			23	0	0			
336	Moist Paper and Rags (MW)	RFP	280, 803-Rev7	Methanol = Methyl Alcohol = CH3OH	4			4	0	0	72 ppmv	New constituent identified (per EDF-803, Rev 7). Mean HSG analytical data.	
336	Moist Paper and Rags (MW)	RFP	280, 369, 413, 421, 803-Rev7, RAV	Methylene Chloride = CH2Cl2 = Dichloromethane	17			17	0	0	68 ppmv	Mean HSG analytical data.	
336	Moist Paper and Rags (MW)	RFP	12, 280, 803-Rev7, CLM	Nitric Acid = HNO3	2			2	0	0		See INEL-96/0280: IDC 336 is no longer considered D001 for nitrate oxidizers or D002 corrosive since pH of free liquids found to be 5 to 12. (EDF-803 lists this waste as D001 ignitable for nitrates, EDF-803 and RPT-12 list this waste as D002 corrosive.)	
336	Moist Paper and Rags (MW)	RFP	CLM	Oil-Dri	0			0	0	0			
336	Moist Paper and Rags (MW)	RFP	280, CLM	Paper	101			101	0	0		Note for RGN: See NOD Response to EPA ID4890008952- Casual or incidental nitration of cellulose is unlikely. Oxidation of organics (rather than nitration), more likely.	
336	Moist Paper and Rags (MW)	RFP	280, 803-Rev7, RAV	Perclene = Perchloroethylene = Tetrachloroethene, 1,1,2,2-	17			17	0	0	7 ppmv	Mean HSG analytical data.	

335	Moist Paper and Rags (MW)	RFP	CLM	Portland Cement	0			0	0	0			
336	Moist Paper and Rags (MW)	RFP	803-Rev7	Silver = Ag	24			24	0	0			
336	Moist Paper and Rags (MW)	RFP	280, 803-Rev7, RAV	Toluene = Toluol = Methylbenzene	18			18	0	0	17	ppmv	Mean HSG analytical data.
336	Moist Paper and Rags (MW)	RFP	280, 369, 413, 421, 803-Rev7, RAV	Trichloroethane, 1,1,1- = TCA	17			17	0	0	180	ppmv	Mean HSG analytical data.
336	Moist Paper and Rags (MW)	RFP	280, 803-Rev7, RAV	Trichloroethylene = Trichloroethene = TCE	17			17	0	0	250	ppmv	Mean HSG analytical data.
336	Moist Paper and Rags (MW)	RFP	CLM	Vermiculite	0			0	0	0			
336	Moist Paper and Rags (MW)	RFP	CLM	Waste Description: Paper, rags, kimwipes. Plastic, canvas, wood, cardboard, polyethylene bottles, rubber.	N/A	N/A	N/A	N/A	N/A	N/A			
336	Moist Paper and Rags (MW)	RFP	280, CLM	Wood	101			101	0	0			Note for RGN: See INEL-96/0280 Acceptable Knowledge - May exhibit the characteristic of ignitability due to cellulosic materials contaminated with nitrate salts. Note for RGN: See NOD Response to EPA ID#890008952- Casual or incidental nitration of cellulose is unlikely. Oxidation of organics (rather than nitration), more likely.
336	Moist Paper and Rags (MW)	RFP	280, 803-Rev7, RAV	Xylene = C6H4(CH3)2 = Dimethyl benzene	18			18	0	0	8	ppmv	Mean HSG analytical data.
337	Plastic, Teflon, Wash, PVC, Retrieved RF TRU (MW)	RFP	280, 803-Rev7, RAV	Acetone = Dimethyl ketone	19			19	0	0	8	ppmv	Mean HSG analytical data. D005-D009, D011, D022, F001-F003, F005-F007, F009
337	Plastic, Teflon, Wash, PVC, Retrieved RF TRU (MW)	RFP	280, 803-Rev7, RAV	Benzene	18			18	0	0	0.7	ppmv	Mean HSG analytical data.
337	Plastic, Teflon, Wash, PVC, Retrieved RF TRU (MW)	RFP	803-Rev7	Cadmium = Cd	23	24		24	0	0			
337	Plastic, Teflon, Wash, PVC, Retrieved RF TRU (MW)	RFP	280, 369, 413, 421, 803-Rev7, RAV	Carbon Tetrachloride = CCl4 = Tetrachloromethane	17			17	0	0	470	ppmv	Mean HSG analytical data.
337	Plastic, Teflon, Wash, PVC, Retrieved RF TRU (MW)	RFP	280, 803-Rev7, RAV	Chloroform = Trichloromethane	17			17	0	0	25	ppmv	Mean HSG analytical data.
337	Plastic, Teflon, Wash, PVC, Retrieved RF TRU (MW)	RFP	803-Rev7	Chromium = Cr	23	24		24	0	0			
337	Plastic, Teflon, Wash, PVC, Retrieved RF TRU (MW)	RFP	280, 803-Rev7	Cyanide cleaning bath solutions	11			11	0	0			Note for RGN: See INEL-96/0280 Acceptable Knowledge - Materials contain only trace quantities of CN and are not reactive.
337	Plastic, Teflon, Wash, PVC, Retrieved RF TRU (MW)	RFP	280, 803-Rev7	Cyanide plating bath solutions	11			11	0	0			Note for RGN: See INEL-96/0280 Acceptable Knowledge - Materials contain only trace quantities of CN and are not reactive.
337	Plastic, Teflon, Wash, PVC, Retrieved RF TRU (MW)	RFP	280, 803-Rev7	Cyclohexane	29			29	0	0	6	ppmv	Mean HSG analytical data.
337	Plastic, Teflon, Wash, PVC, Retrieved RF TRU (MW)	RFP	280, RAV	Dichloroethene, 1,1- = Dichloroethylene, 1,1-	17			17	0	0	1	ppmv	Mean HSG analytical data.
337	Plastic, Teflon, Wash, PVC, Retrieved RF TRU (MW)	RFP	280, RAV	Ethyl benzene = Phenylethane	18			18	0	0	2	ppmv	Mean HSG analytical data.
337	Plastic, Teflon, Wash, PVC, Retrieved RF TRU (MW)	RFP	280, 369, 413, 421, 803-Rev7, RAV	Freon = 1,1,2-Trichloro-1,2,2-Trifluoroethane	17			17	0	0	9	ppmv	Mean HSG analytical data.
337	Plastic, Teflon, Wash, PVC, Retrieved RF TRU (MW)	RFP	421, 803-Rev7, RAV	Lead = Pb	23	24		23	0	0			Characteristic: EP Toxic
337	Plastic, Teflon, Wash, PVC, Retrieved RF TRU (MW)	RFP	803-Rev7	Mercury = Hg	24			24	0	0			New constituent identified (per EDF-803, Rev 7)
337	Plastic, Teflon, Wash, PVC, Retrieved RF TRU (MW)	RFP	280, 803-Rev7, RAV	Methanol = Methyl Alcohol = CH3OH	4			4	0	0	80	ppmv	Mean HSG analytical data.
337	Plastic, Teflon, Wash, PVC, Retrieved RF TRU (MW)	RFP	280, 369, 413, 421, 803-Rev7, RAV	Methylene Chloride = CH2Cl2 = Dichloromethane	17			17	0	0	2	ppmv	Mean HSG analytical data.
337	Plastic, Teflon, Wash, PVC, Retrieved RF TRU (MW)	RFP	CLM	Oil-Dri	0			0	0	0			
337	Plastic, Teflon, Wash, PVC, Retrieved RF TRU (MW)	RFP	12, 803-Rev7, CLM	Paper	101			101	0	0			Note for RGN: See INEL-96/0280 Acceptable Knowledge - Minimal amount of nitrate salts do not warrant an ignitable characteristic and the waste is not listed as D001 in either EDF-803 or RPT-12.
337	Plastic, Teflon, Wash, PVC, Retrieved RF TRU (MW)	RFP	280, RAV	Pentane = Perchloroethylene = Tetrachloroethene, 1,1,2,2-	17			17	0	0	3	ppmv	Mean HSG analytical data.
337	Plastic, Teflon, Wash, PVC, Retrieved RF TRU (MW)	RFP	12, 803-Rev7, CLM	Plastic	101			101	0	0			Note for RGN: See INEL-96/0280 Acceptable Knowledge - Minimal amount of nitrate salts do not warrant an ignitable characteristic and the waste is not listed as D001 in either EDF-803 or RPT-12.
337	Plastic, Teflon, Wash, PVC, Retrieved RF TRU (MW)	RFP	CLM	Portland Cement	0			0	0	0			
337	Plastic, Teflon, Wash, PVC, Retrieved RF TRU (MW)	RFP	803-Rev7	Silver = Ag	24			24	0	0			
337	Plastic, Teflon, Wash, PVC, Retrieved RF TRU (MW)	RFP	280, 803-Rev7, RAV	Toluene = Toluol = Methylbenzene	18			18	0	0	10	ppmv	Mean HSG analytical data.
337	Plastic, Teflon, Wash, PVC, Retrieved RF TRU (MW)	RFP	280, 369, 413, 421, 803-Rev7, RAV	Trichloroethane, 1,1,1- = TCA	17			17	0	0	110	ppmv	Mean HSG analytical data.
337	Plastic, Teflon, Wash, PVC, Retrieved RF TRU (MW)	RFP	280, 421, 803-Rev7, RAV	Trichloroethylene = Trichloroethene = TCE	17			17	0	0	130	ppmv	Mean HSG analytical data.
337	Plastic, Teflon, Wash, PVC, Retrieved RF TRU (MW)	RFP	CLM	Vermiculite	0			0	0	0			
337	Plastic, Teflon, Wash, PVC, Retrieved RF TRU (MW)	RFP	CLM	Waste Description: Plastics, polyethylene, PVC Teflon, nonleaded rubber. Respirator facemasks, paper.	N/A	N/A	N/A	N/A	N/A	N/A			
337	Plastic, Teflon, Wash, PVC, Retrieved RF TRU (MW)	RFP	280, 803-Rev7, RAV	Xylene = C6H4(CH3)2 = Dimethyl benzene	18			18	0	0	8	ppmv	Mean HSG analytical data.
338	RWMC Lead Shielded Overpack Empty (UNK)	Batts	803-Rev7	Unknown	Unkn	Unkn	Unkn	Unkn	Unkn	Unkn			Unknown
338	Incubation and Chemical Warfare Service Filter Media (MW)	RFP	CLM	Aluminum = Al	23	23		23	0	0			D001, D005, D007, D008, D011 F001, F002

336	Insulation and Chemical Warfare Service Filter Media (MW)	RFP	803-Rev7, RAV	Asbestos	0			0	0	0	45		
336	Insulation and Chemical Warfare Service Filter Media (MW)	RFP	803-Rev7	Barium = Ba	21	24	107	24	0	0			
336	Insulation and Chemical Warfare Service Filter Media (MW)	RFP	RAV	Benzene	16			16	0	0			
336	Insulation and Chemical Warfare Service Filter Media (MW)	RFP	369, 413, 421, 803-Rev7, RAV	Carbon Tetrachloride = CCl4 = Tetrachloromethane	17			17	0	0	0.015	Organic solvents are assumed to be present in trace amounts similar to IDCs 335, 376, and 480. IDC 336 replaced by IDC 376 in 1977.	
336	Insulation and Chemical Warfare Service Filter Media (MW)	RFP	RAV	Chloroform = Trichloromethane	17			17	0	0			
336	Insulation and Chemical Warfare Service Filter Media (MW)	RFP	803-Rev7	Chromium = Cr	23	24		24	0	0			
336	Insulation and Chemical Warfare Service Filter Media (MW)	RFP	RAV	Dichloroethane, 1,2- = Ethylene dichloride)	17			17	0	0			
336	Insulation and Chemical Warfare Service Filter Media (MW)	RFP	RAV	Dichloroethene, 1,1- = Dichloroethylene, 1,1-	17			17	0	0			
336	Insulation and Chemical Warfare Service Filter Media (MW)	RFP	CLM	Filter media	0			0	0	0			
336	Insulation and Chemical Warfare Service Filter Media (MW)	RFP	369, 413, 421, 803-Rev7, RAV	Freon = 1,1,2-Trichloro-1,2,2-Trifluoroethane	17			17	0	0	0.01	Characteristic: Toxic	
336	Insulation and Chemical Warfare Service Filter Media (MW)	RFP	CLM	Insulation	0			0	0	0			
336	Insulation and Chemical Warfare Service Filter Media (MW)	RFP	803-Rev7	Lead = Pb	23	24		24	0	0			
336	Insulation and Chemical Warfare Service Filter Media (MW)	RFP	369, 413, 421, 803-Rev7, RAV	Methylene Chloride = CH2Cl2 = Dichloromethane	17			17	0	0		Characteristic: Toxic	
336	Insulation and Chemical Warfare Service Filter Media (MW)	RFP	12, 280, 413, 803-Rev7	Nitrates	104			104	0	0		Note for RGN: Possibility of spontaneous combustion due to nitrate salts no longer applies. (See Acceptable Knowledge Document for INEEL Stored Transuranic Waste--Rocky Flats Plant Waste, Revision 3, INEL-96/0280, February 2003.) (However, EDF-803 and RPT-12 still list this as D001 waste due to nitrates.)	
336	Insulation and Chemical Warfare Service Filter Media (MW)	RFP	280, CLM	Nitric Acid = HNO3	2			2	0	0		Note for RGN: See INEL-95/0280 Acceptable Knowledge - The material in this waste group is not a liquid . . .absorbants were added.	
336	Insulation and Chemical Warfare Service Filter Media (MW)	RFP	CLM	Oil-Dri	0			0	0	0			
336	Insulation and Chemical Warfare Service Filter Media (MW)	RFP	RAV	Perclene = Perchloroethylene = Tetrachloroethene, 1,1,2,2-	17			17	0	0			
336	Insulation and Chemical Warfare Service Filter Media (MW)	RFP	CLM	Portland Cement	0			0	0	0			
336	Insulation and Chemical Warfare Service Filter Media (MW)	RFP	803-Rev7	Silver = Ag	24			24	0	0			
336	Insulation and Chemical Warfare Service Filter Media (MW)	RFP	RAV	Toluene = Toluol = Methylbenzene	16			16	0	0			
336	Insulation and Chemical Warfare Service Filter Media (MW)	RFP	369, 413, 421, 803-Rev7, RAV	Trichloroethane, 1,1,1- = TCA	17			17	0	0	0.015	Characteristic: Toxic	
336	Insulation and Chemical Warfare Service Filter Media (MW)	RFP	803-Rev7, RAV	Trichloroethylene = Trichloroethene = TCE	17			17	0	0			
336	Insulation and Chemical Warfare Service Filter Media (MW)	RFP	CLM	Waste Description: Fiberglass, asbestos filter media, Asbestos-type pipe insulation, gloves, firebrickets. Aluminum and wood filter frames.	N/A	N/A	N/A	N/A	N/A	N/A			
336	Insulation and Chemical Warfare Service Filter Media (MW)	RFP	12, 803-Rev7, CLM	Wood	101			101	0	0		Note for RGN: Possibility of spontaneous combustion due to nitrate salts no longer applies. (See Acceptable Knowledge Document for INEEL Stored Transuranic Waste--Rocky Flats Plant Waste, Revision 3, INEL-96/0280, February 2003.) (However, EDF-803 and RPT-12 still list this as D001 ignitable waste due to nitrates.)	
339	Leaded Rubber Gloves and Aprons (MW)	RFP	280, 803-Rev7, RAV	Acetone = Dimethyl ketone	19			19	0	0	46 ppmv	Mean HSG analytical data.	D008, D022, F001-F003, F005-F007, F009
339	Leaded Rubber Gloves and Aprons (MW)	RFP	280, 803-Rev7, RAV	Benzene	16			16	0	0	1 ppmv	Mean HSG analytical data.	
339	Leaded Rubber Gloves and Aprons (MW)	RFP	280, 421, 803-Rev7, RAV	Carbon Tetrachloride = CCl4 = Tetrachloromethane	17			17	0	0	400 ppmv	Mean HSG analytical data.	
339	Leaded Rubber Gloves and Aprons (MW)	RFP	280, 803-Rev7, RAV	Chloroform = Trichloromethane	17			17	0	0	30 ppmv	Mean HSG analytical data.	
339	Leaded Rubber Gloves and Aprons (MW)	RFP	280, CLM	Combustibles	101			101	0	0		Note for RGN: See INEL-95/0280 Acceptable Knowledge - The reactivity characteristic is no longer applicable to IDC 339 since it has been determined that conditions necessary for the formation of lead nitrate and nitro-organic compounds do not exist.	
339	Leaded Rubber Gloves and Aprons (MW)	RFP	280, 803-Rev7	Cyanide cleaning bath solutions	11			11	0	0		New constituent identified (per EDF-803, Rev 7). Minimal CN concentrations.	
339	Leaded Rubber Gloves and Aprons (MW)	RFP	280, 803-Rev7	Cyanide plating bath solutions	11			11	0	0		New constituent identified (per EDF-803, Rev 7). Minimal CN concentrations.	
339	Leaded Rubber Gloves and Aprons (MW)	RFP	280, 803-Rev7	Cyclohexane	29			29	0	0	0.7 ppmv	Mean HSG analytical data.	
339	Leaded Rubber Gloves and Aprons (MW)	RFP	280, RAV	Dichloroethane, 1,2- = (Ethylene dichloride)	17			17	0	0	1 ppmv	Mean HSG analytical data.	
339	Leaded Rubber Gloves and Aprons (MW)	RFP	280, RAV	Dichloroethene, 1,1- = Dichloroethylene, 1,1-	17			17	0	0	0.8 ppmv	Mean HSG analytical data.	
339	Leaded Rubber Gloves and Aprons (MW)	RFP	803-Rev7	Electroplating sludges	11	24		11	0	0		New constituent identified (per EDF-803, Rev 7). Minimal CN concentrations.	
339	Leaded Rubber Gloves and Aprons (MW)	RFP	280, RAV	Ethyl benzene = Phenylethane	18			18	0	0	0.7 ppmv	Mean HSG analytical data.	
339	Leaded Rubber Gloves and Aprons (MW)	RFP	280, 803-Rev7, RAV	Freon = 1,1,2-Trichloro-1,2,2-Trifluoroethane	17			17	0	0	4 ppmv	Mean HSG analytical data.	
339	Leaded Rubber Gloves and Aprons (MW)	RFP	369, 413, 421, 803-Rev7, CLM, RAV	Lead = Pb	23	24		23	0	0	58		

339	Leaded Rubber Gloves and Aprons (MW)	RFP	280, 803-Rev7	Methanol = Methyl Alcohol = CH3OH	4			4	0	0	6 ppmv	New constituent identified (per EDF-803, Rev 7). Mean HSG analytical data.	
339	Leaded Rubber Gloves and Aprons (MW)	RFP	280, 421, 803-Rev7, RAV	Methylene Chloride = CH2Cl2 = Dichloromethane	17			17	0	0	17 ppmv	Mean HSG analytical data.	
339	Leaded Rubber Gloves and Aprons (MW)	RFP	12, 280, 803-Rev7	Mixed lead nitrate and organic material	104	24		104	0	0		Note for RGN: See INEL-96/0280 Acceptable Knowledge - Formation of lead nitrate and nitro-organic compounds no longer considered possible, RPT-12 does not list this waste as D001 for nitrates, although EDF-803 does. Note for RGN: Further evaluation removed the D003 HWN, see EDF-803-rev5.	
339	Leaded Rubber Gloves and Aprons (MW)	RFP	12, 280, 413, 803-Rev7, CLM	Nitrates	104			104	0	0		Note for RGN: See INEL-96/0280 Acceptable Knowledge - Formation of lead nitrate and nitro-organic compounds no longer considered possible. RPT-12 does not list this waste as D001 for nitrates, although EDF-803 does. Note for RGN: Further evaluation removed the D003 HWN, see EDF-803-rev5.	
339	Leaded Rubber Gloves and Aprons (MW)	RFP	CLM	OH-DH	0			0	0	0			
339	Leaded Rubber Gloves and Aprons (MW)	RFP	280, 803-Rev7	Perclene = Perchloroethylene = Tetrachloroethene, 1,1,2,2-	17			17	0	0	0.5 ppmv	New constituent identified (per EDF-803, Rev 7). Mean HSG analytical data.	
339	Leaded Rubber Gloves and Aprons (MW)	RFP	280, CLM	Rubber	101			101	0	0		Note for RGN: See INEL-96/0280 Acceptable Knowledge - The reactivity characteristic is no longer applicable to IDC 339 since it has been determined that conditions necessary for the formation of lead nitrate and nitro-organic compounds do not exist.	
339	Leaded Rubber Gloves and Aprons (MW)	RFP	280, 803-Rev7, RAV	Toluene = Toluol = Methylbenzene	18			18	0	0	5 ppmv	Mean HSG analytical data.	
339	Leaded Rubber Gloves and Aprons (MW)	RFP	280, 421, 803-Rev7, RAV	Trichloroethane, 1,1,1- = TCA	17			17	0	0	76 ppmv	Mean HSG analytical data.	
339	Leaded Rubber Gloves and Aprons (MW)	RFP	280, 421, 803-Rev7, RAV	Trichloroethylene = Trichloroethene = TCE	17			17	0	0	1 ppmv	Mean HSG analytical data.	
339	Leaded Rubber Gloves and Aprons (MW)	RFP	CLM	Vermiculite	0			0	0	0			
339	Leaded Rubber Gloves and Aprons (MW)	RFP	CLM	Waste Description: See Code 463. Leaded glovebox gloves, aprons. Some unleaded gloves. Lead bricks, lead sheeting.	N/A	N/A	N/A	N/A	N/A	N/A			
339	Leaded Rubber Gloves and Aprons (MW)	RFP	280, 803-Rev7, RAV	Xylene = C6H4(CH3)2 = Dimethyl benzene	18			18	0	0	2 ppmv	Mean HSG analytical data.	
33A	A mixture of waste characterized with IDC codes 335, 336, 337, and 339 (MW)	RFP	803-Rev7	Arsenic = As	24			24	0	0			D004-D011, D022, F001-F003, F005-F007, F009
33A	A mixture of waste characterized with IDC codes 335, 336, 337, and 339 (MW)	RFP	803-Rev7	Asbestos	0			0	0	0			
33A	A mixture of waste characterized with IDC codes 335, 336, 337, and 339 (MW)	RFP	803-Rev7	Barium = Ba	21	24	107	24	0	0			
33A	A mixture of waste characterized with IDC codes 335, 336, 337, and 339 (MW)	RFP	803-Rev7	Cadmium = Cd	23	24		24	0	0			
33A	A mixture of waste characterized with IDC codes 335, 336, 337, and 339 (MW)	RFP	803-Rev7	Carbon Tetrachloride = CCl4 = Tetrachloromethane	17			17	0	0		Organic solvents assumed to be present in trace amounts based on data for IDCs 335, 336, 337, and 339.	
33A	A mixture of waste characterized with IDC codes 335, 336, 337, and 339 (MW)	RFP	803-Rev7	Chloroform = Trichloromethane	17			17	0	0			
33A	A mixture of waste characterized with IDC codes 335, 336, 337, and 339 (MW)	RFP	803-Rev7	Chromium = Cr	23	24		24	0	0			
33A	A mixture of waste characterized with IDC codes 335, 336, 337, and 339 (MW)	RFP	280, 803-Rev7	Cyanide	11			11	0	0		Note for RGN: See INEL-96/0280 Acceptable Knowledge - The materials do not contain cyanides or sulfides and are not capable of detonation or explosive reaction.	
33A	A mixture of waste characterized with IDC codes 335, 336, 337, and 339 (MW)	RFP	280, 803-Rev7	Cyanide cleaning bath solutions	11			11	0	0		Note for RGN: See INEL-96/0280 Acceptable Knowledge - The materials do not contain cyanides or sulfides and are not capable of detonation or explosive reaction.	
33A	A mixture of waste characterized with IDC codes 335, 336, 337, and 339 (MW)	RFP	280, 803-Rev7	Cyanide plating bath solutions	11			11	0	0		Note for RGN: See INEL-96/0280 Acceptable Knowledge - The materials do not contain cyanides or sulfides and are not capable of detonation or explosive reaction.	
33A	A mixture of waste characterized with IDC codes 335, 336, 337, and 339 (MW)	RFP	803-Rev7	Cyclohexane	28			28	0	0			
33A	A mixture of waste characterized with IDC codes 335, 336, 337, and 339 (MW)	RFP	803-Rev7	Freon = 1,1,2-Trichloro-1,2,2-Trifluoroethane	17			17	0	0			
33A	A mixture of waste characterized with IDC codes 335, 336, 337, and 339 (MW)	RFP	280, 803-Rev7	Lead = Pb	23	24		23	0	0			
33A	A mixture of waste characterized with IDC codes 335, 336, 337, and 339 (MW)	RFP	803-Rev7	Mercury = Hg	24			24	0	0			
33A	A mixture of waste characterized with IDC codes 335, 336, 337, and 339 (MW)	RFP	803-Rev7	Methylene Chloride = CH2Cl2 = Dichloromethane	17			17	0	0			
33A	A mixture of waste characterized with IDC codes 335, 336, 337, and 339 (MW)	RFP	12, 803-Rev7	Mixed lead nitrate and organic material	104	24		104	0	0		This waste is not listed as D001 ignitable for nitrates in the report or RPT-12 based on the information for IDCs 335, 336, 337, and 339.	
33A	A mixture of waste characterized with IDC codes 335, 336, 337, and 339 (MW)	RFP	12, 280, 413, 803-Rev7	Nitrates	104			104	0	0		Note for RGN: See INEL-96/0280 Acceptable Knowledge - This waste is not listed as D001 ignitable for nitrates in the report or RPT-12 based on the information for IDCs 335, 336, 337, and 339 (although still listed as D001 in EDF-803).	
33A	A mixture of waste characterized with IDC codes 335, 336, 337, and 339 (MW)	RFP	803-Rev7	Perclene = Perchloroethylene = Tetrachloroethene, 1,1,2,2-	17			17	0	0			
33A	A mixture of waste characterized with IDC codes 335, 336, 337, and 339 (MW)	RFP	803-Rev7	Selenium = Se	22	23	24	24	0	0			
33A	A mixture of waste characterized with IDC codes 335, 336, 337, and 339 (MW)	RFP	803-Rev7	Silver = Ag	24			24	0	0			
33A	A mixture of waste characterized with IDC codes 335, 336, 337, and 339 (MW)	RFP	803-Rev7	Toluene = Toluol = Methylbenzene	18			18	0	0			
33A	A mixture of waste characterized with IDC codes 335, 336, 337, and 339 (MW)	RFP	803-Rev7	Trichloroethane, 1,1,1- = TCA	17			17	0	0			
33A	A mixture of waste characterized with IDC codes 335, 336, 337, and 339 (MW)	RFP	803-Rev7	Trichloroethylene = Trichloroethene = TCE	17			17	0	0			
33A	A mixture of waste characterized with IDC codes 335, 336, 337, and 339 (MW)	RFP	803-Rev7	Xylene = C6H4(CH3)2 = Dimethyl benzene	18			18	0	0			
33B	A mixture of waste characterized with IDC codes 330, 337, and 339 (MW)	RFP	803-Rev7	Cadmium = Cd	23	24		24	0	0			D006-D008, D011, D022, F001-F003, F005-F007, F009
33B	A mixture of waste characterized with IDC codes 330, 337, and 339 (MW)	RFP	803-Rev7	Carbon Tetrachloride = CCl4 = Tetrachloromethane	17			17	0	0		Organic solvents assumed to be present in trace amounts based on data for IDCs 330, 337, and 339.	

338	A mixture of waste characterized with IDC codes 330, 337, and 338 (MW)	RFP	803-Rev7	Chloroform = Trichloromethane	17			17	0	0			
338	A mixture of waste characterized with IDC codes 330, 337, and 338 (MW)	RFP	803-Rev7	Chromium = Cr	23	24		24	0	0			
338	A mixture of waste characterized with IDC codes 330, 337, and 338 (MW)	RFP	280, 803-Rev7	Cyanide cleaning bath solutions	11			11	0	0		Note for RGN: See INEL-96/0280 Acceptable Knowledge - The materials do not contain cyanides or sulfides and are not capable of detonation or explosive reaction.	
338	A mixture of waste characterized with IDC codes 330, 337, and 338 (MW)	RFP	280, 803-Rev7	Cyanide plating bath solutions	11			11	0	0		Note for RGN: See INEL-96/0280 Acceptable Knowledge - The materials do not contain cyanides or sulfides and are not capable of detonation or explosive reaction.	
338	A mixture of waste characterized with IDC codes 330, 337, and 338 (MW)	RFP	803-Rev7	Cyclohexane	28			28	0	0			
338	A mixture of waste characterized with IDC codes 330, 337, and 338 (MW)	RFP	803-Rev7	Dichloroethene, cis-1,2- = (Dichloroethylene)	17			17	0	0			
338	A mixture of waste characterized with IDC codes 330, 337, and 338 (MW)	RFP	803-Rev7	Dichloroethylene, trans-1,2 = (Dichloroethylene)	17			17	0	0		New constituent identified (per EDF-803, Rev 7)	
338	A mixture of waste characterized with IDC codes 330, 337, and 338 (MW)	RFP	803-Rev7	Electroplating sludges	11	24		11	0	0		New constituent identified (per EDF-803, Rev 7)	
338	A mixture of waste characterized with IDC codes 330, 337, and 338 (MW)	RFP	803-Rev7	Ethyl benzene = Phenylethane	16			16	0	0			
338	A mixture of waste characterized with IDC codes 330, 337, and 338 (MW)	RFP	803-Rev7	Freon = 1,1,2-Trichloro-1,2,2-Trifluoroethane	17			17	0	0			
338	A mixture of waste characterized with IDC codes 330, 337, and 338 (MW)	RFP	12, 280, 803-Rev7	Lead = Pb	23	24		23	0	0		Note for RGN: See INEL-96/0280 Acceptable Knowledge - This waste is not listed as D001 ignitable or D003 reactive for nitrates in the report or RPT-12 based on the information for IDCs 330, 337, and 338 (although still listed as D001 in EDF-803).	
338	A mixture of waste characterized with IDC codes 330, 337, and 338 (MW)	RFP	803-Rev7	Methylene Chloride = CH_2Cl_2 = Dichloromethane	17			17	0	0			
338	A mixture of waste characterized with IDC codes 330, 337, and 338 (MW)	RFP	12, 280, 803-Rev7	Mixed lead nitrate and organic material	104	24		104	0	0		This waste is not listed as D001 ignitable for nitrates in INEL-96/0280 or RPT-12 based on the information for IDCs 330, 337, and 338 (although still listed as D001 in EDF-803).	
338	A mixture of waste characterized with IDC codes 330, 337, and 338 (MW)	RFP	803-Rev7	Perclene = Perchloroethylene = Tetrachloroethene, 1,1,2,2-	17			17	0	0			
338	A mixture of waste characterized with IDC codes 330, 337, and 338 (MW)	RFP	803-Rev7	Silver = Ag	24			24	0	0			
338	A mixture of waste characterized with IDC codes 330, 337, and 338 (MW)	RFP	803-Rev7	Toluene = Toluol = Methylbenzene	16			16	0	0			
338	A mixture of waste characterized with IDC codes 330, 337, and 338 (MW)	RFP	803-Rev7	Trichloroethane, 1,1,1- = TCA	17			17	0	0			
338	A mixture of waste characterized with IDC codes 330, 337, and 338 (MW)	RFP	803-Rev7	Trichloroethylene = Trichloroethene = TCE	17			17	0	0			
338	A mixture of waste characterized with IDC codes 330, 337, and 338 (MW)	RFP	803-Rev7	Xylene = $C_6H_4(CH_3)_2$ = Dimethyl benzene	16			16	0	0			
350	Insulation (MW)	RFP	803-Rev7, CLM, RAV	Asbestos	0			0	0	0	45		D005, D007, D008, D011, F001, F002
350	Insulation (MW)	RFP	803-Rev7	Barium = Ba	21	24	107	24	0	0			
350	Insulation (MW)	RFP	369, 413, 421, 803-Rev7, RAV	Carbon Tetrachloride = CCl_4 = Tetrachloromethane	17			17	0	0	0.015	Organic solvents are assumed to be present in trace amounts similar to IDCs 335, 376, and 490. IDC 350 replaced by IDCs 338 & 376 in 1973.	
350	Insulation (MW)	RFP	803-Rev7	Chromium = Cr	23	24		24	0	0			
350	Insulation (MW)	RFP	CLM	Filter media	0			0	0	0			
350	Insulation (MW)	RFP	369, 413, 421, 803-Rev7, RAV	Freon = 1,1,2-Trichloro-1,2,2-Trifluoroethane	17			17	0	0	0.01	Characteristic: Toxic	
350	Insulation (MW)	RFP	CLM	Insulation	0			0	0	0			
350	Insulation (MW)	RFP	803-Rev7	Lead = Pb	23	24		23	0	0			
350	Insulation (MW)	RFP	369, 413, 421, 803-Rev7, RAV	Methylene Chloride = CH_2Cl_2 = Dichloromethane	17			17	0	0	0.005	Characteristic: Toxic	
350	Insulation (MW)	RFP	280, 389, 413	Nitrates	104			104	0	0		Note for RGN: See INEL-96/0280 Acceptable Knowledge - The material in this waste group does not meet the definition of ignitability.	
350	Insulation (MW)	RFP	280, CLM	Nitric Acid = HNO_3	2			2	0	0		Note for RGN: See INEL-96/0280 Acceptable Knowledge - The material in this waste group does not meet the definition of corrosive.	
350	Insulation (MW)	RFP	CLM	Oil-Dri	0			0	0	0			
350	Insulation (MW)	RFP	CLM	Portland Cement	0			0	0	0			
350	Insulation (MW)	RFP	803-Rev7	Silver = Ag	24			24	0	0			
350	Insulation (MW)	RFP	369, 413, 421, 803-Rev7, RAV	Trichloroethane, 1,1,1- = TCA	17			17	0	0	0.015	Characteristic: Toxic	
350	Insulation (MW)	RFP	803-Rev7	Trichloroethylene = Trichloroethene = TCE	17			17	0	0			
350	Insulation (MW)	RFP	CLM	Waste Description: Asbestos-type pipe insulation, gloves, firebricks. Prefilter and filter media, fiberglass and asbestos. Surgeons gloves.	N/A	N/A	N/A	N/A	N/A	N/A			
351	Insulation Heel (ROW)	RFP	803-Rev7, CLM	Waste Description: Insoluble insulation residue or "heel" from R&D project. Single waste drum was received in 1972	None	None	None	None	None	None		ROW assumed to have no RGNs.	None
368	MgO Ceramic Crucibles - Not LECO (ROW)	RFP	421, 803-Rev7	Waste Description: Crucibles are used in the reduction of plutonium compounds to the metal.	None	None	None	None	None	None		ROW assumed to have no RGNs.	None
370	LECO Crucibles (ROW)	RFP	803-Rev7, CLM	Waste Description: Fired-ceramic, silicate-based LECO crucibles and crucible caps.	None	None	None	None	None	None		ROW assumed to have no RGNs.	None
371	Firebrick (MW)	RFP	280, 803-Rev7	Acetone = Dimethyl ketone	18			19	0	0	7 ppmv	New constituent identified (per EDF-803, Rev 7). Mean HSG analytical data.	D004-D011, F001-F003, F005-F007, F009
371	Firebrick (MW)	RFP	803-Rev7	Arsenic = As	24			24	0	0			
371	Firebrick (MW)	RFP	803-Rev7	Barium = Ba	21	24	107	24	0	0			
371	Firebrick (MW)	RFP	280, 803-Rev7	Benzene	16			16	0	0	0.2 ppmv	New constituent identified (per EDF-803, Rev 7). Mean HSG analytical data	
371	Firebrick (MW)	RFP	803-Rev7	Cadmium = Cd	23	24		24	0	0			

371	Firebrick (MW)	RFP	280, 803-Rev7	Carbon Tetrachloride = CCl4 = Tetrachloromethane	17			17	0	0	8 ppmv	Mean HSG analytical data.	
371	Firebrick (MW)	RFP	803-Rev7	Chromium = Cr	23	24		24	0	0			
371	Firebrick (MW)	RFP	CLM	Firebrick	0			0	0	0			
371	Firebrick (MW)	RFP	280, 803-Rev7	Freon = 1,1,2-Trichloro-1,2,2-Trifluoroethane	17			17	0	0	0.1 ppmv	New constituent identified (per EDF-803, Rev 7). Mean HSG analytical data.	
371	Firebrick (MW)	RFP	803-Rev7	Lead = Pb	23	24		23	0	0			
371	Firebrick (MW)	RFP	803-Rev7	Mercury = Hg	24			24	0	0			
371	Firebrick (MW)	RFP	280, 803-Rev7	Methanol = Methyl Alcohol = CH3OH	4			4	0	0	3 ppmv	New constituent identified (per EDF-803, Rev 7). Mean HSG analytical data.	
371	Firebrick (MW)	RFP	280, 421, 803-Rev7, RAV	Methylene Chloride = CH2Cl2 = Dichloromethane	17			17	0	0	3 ppmv	Mean HSG analytical data.	
371	Firebrick (MW)	RFP	280, 803-Rev7	Perclene = Perchloroethylene = Tetrachloroethene, 1,1,2,2-	17			17	0	0	0.7 ppmv	New constituent identified (per EDF-803, Rev 7). Mean HSG analytical data.	
371	Firebrick (MW)	RFP	803-Rev7	Selenium = Se	22	23	24	24	0	0			
371	Firebrick (MW)	RFP	803-Rev7	Silver = Ag	24			24	0	0			
371	Firebrick (MW)	RFP	280, 803-Rev7	Toluene = Toluol = Methylbenzene	16			16	0	0	8 ppmv	Mean HSG analytical data.	
371	Firebrick (MW)	RFP	280, 421, 803-Rev7, RAV	Trichloroethane, 1,1,1- = TCA	17			17	0	0	45 ppmv	Mean HSG analytical data.	
371	Firebrick (MW)	RFP	280, 421, 803-Rev7, RAV	Trichloroethylene = Trichloroethene = TCE	17			17	0	0	41 ppmv	Mean HSG analytical data.	
371	Firebrick (MW)	RFP	CLM	Waste Description: Whole & broken construction bricks, cinderblock, firebrick.	N/A	N/A	N/A	N/A	N/A	N/A			
371	Firebrick (MW)	RFP	280, 803-Rev7	Xylene = C8H4(CH3)2 = Dimethyl benzene	16			16	0	0	0.4 ppmv	Mean HSG analytical data.	
372	Grit (ROW)	RFP	803-Rev7, CLM	Waste Description: Incomplete info. Aluminum oxide and iron fines.	None	None	None	None	None	None		ROW assumed to have no RGNs.	None
374	Blacktop, Concrete, Dirt, and Sand	RFP	280, 803-Rev7	Acetone = Dimethyl ketone	19			19	0	0	8 ppmv	Mean HSG analytical data.	D004-D011, D018, F001-F003, F005-F007, F009
374	Blacktop, Concrete, Dirt, and Sand	RFP	803-Rev7	Arsenic = As	24			24	0	0			
374	Blacktop, Concrete, Dirt, and Sand	RFP	803-Rev7	Barium = Ba	21	24	107	24	0	0			
374	Blacktop, Concrete, Dirt, and Sand	RFP	280, 803-Rev7	Benzene	16			16	0	0	0.4 ppmv	Mean HSG analytical data.	
374	Blacktop, Concrete, Dirt, and Sand	RFP	CLM	Bricks	0			0	0	0			
374	Blacktop, Concrete, Dirt, and Sand	RFP	280, 369, 413, 421, RAV	Butanol = Butyl Alcohol = C4H9OH	4			4	0	0	12 ppmv	Mean HSG analytical data	
374	Blacktop, Concrete, Dirt, and Sand	RFP	803-Rev7	Cadmium = Cd	23	24		24	0	0			
374	Blacktop, Concrete, Dirt, and Sand	RFP	280, 369, 413, 421, 803-Rev7, RAV	Carbon Tetrachloride = CCl4 = Tetrachloromethane	17			17	0	0	2 ppmv	Mean HSG analytical data.	
374	Blacktop, Concrete, Dirt, and Sand	RFP	803-Rev7	Chromium = Cr	23	24		24	0	0			
374	Blacktop, Concrete, Dirt, and Sand	RFP	CLM	Concrete	0			0	0	0			
374	Blacktop, Concrete, Dirt, and Sand	RFP	280, 803-Rev7	Cyanide	11			11	0	0		Note for RGN: See INEL-96/0280 Acceptable Knowledge - The waste may contain very small amounts of cyanide in wastewater treatment sludges from the treatment of electroplating wastes. However, the cyanide levels in the sludges are not expected to be sufficient to cause the sludge to be reactive.	
374	Blacktop, Concrete, Dirt, and Sand	RFP	280, 803-Rev7	Cyanide cleaning bath solutions	11			11	0	0		Note for RGN: See INEL-96/0280 Acceptable Knowledge - The waste may contain very small amounts of cyanide in wastewater treatment sludges from the treatment of electroplating wastes. However, the cyanide levels in the sludges are not expected to be sufficient to cause the sludge to be reactive.	
374	Blacktop, Concrete, Dirt, and Sand	RFP	280, 803-Rev7	Cyanide plating bath solutions	11			11	0	0		Note for RGN: See INEL-96/0280 Acceptable Knowledge - The waste may contain very small amounts of cyanide in wastewater treatment sludges from the treatment of electroplating wastes. However, the cyanide levels in the sludges are not expected to be sufficient to cause the sludge to be reactive.	
374	Blacktop, Concrete, Dirt, and Sand	RFP	280, 369, 413, 421, 803-Rev7, RAV	Freon = 1,1,2-Trichloro-1,2,2-Trifluoroethane	17			17	0	0	12 ppmv	Mean HSG analytical data.	
374	Blacktop, Concrete, Dirt, and Sand	RFP	280, 803-Rev7	Lead = Pb	23	24		24	0	0		Note for RGN: See INEL-96/0280 Acceptable Knowledge - The waste may include demolished floors and walls that were painted with lead-based paint.	
374	Blacktop, Concrete, Dirt, and Sand	RFP	803-Rev7	Mercury = Hg	24			24	0	0			
374	Blacktop, Concrete, Dirt, and Sand	RFP	280, 369, 413, 421, 803-Rev7, RAV	Methanol = Methyl Alcohol = CH3OH	4			4	0	0	10 ppmv	Mean HSG analytical data.	
374	Blacktop, Concrete, Dirt, and Sand	RFP	280, 803-Rev7	Methyl ethyl ketone = Butanone	19			19	0	0	1 ppmv	Mean HSG analytical data.	
374	Blacktop, Concrete, Dirt, and Sand	RFP	280, 369, 413, 421, 803-Rev7, RAV	Methylene Chloride = CH2Cl2 = Dichloromethane	17			17	0	0	84 ppmv	Mean HSG analytical data.	
374	Blacktop, Concrete, Dirt, and Sand	RFP	280, 369, 421, 803-Rev7, RAV	Nitrobenzene = C6H5NO2 = Nitrobenzol	27			27	0	0		INEL-96/0280 states that an F004 HWN for nitrobenzene is not warranted	
374	Blacktop, Concrete, Dirt, and Sand	RFP	CLM	Oil-Dri	0			0	0	0			
374	Blacktop, Concrete, Dirt, and Sand	RFP	280, 369, 413, 421, 803-Rev7, RAV	Perclene = Perchloroethylene = Tetrachloroethene, 1,1,2,2-	17			17	0	0	0.2 ppmv	Mean HSG analytical data.	
374	Blacktop, Concrete, Dirt, and Sand	RFP	CLM	Portland Cement	0			0	0	0			
374	Blacktop, Concrete, Dirt, and Sand	RFP	803-Rev7	Selenium = Se	22	23	24	24	0	0			
374	Blacktop, Concrete, Dirt, and Sand	RFP	803-Rev7	Silver = Ag	24			24	0	0			
374	Blacktop, Concrete, Dirt, and Sand	RFP	280, 803-Rev7	Toluene = Toluol = Methylbenzene	16			16	0	0	23 ppmv	Mean HSG analytical data.	

374	Blacktop, Concrete, Dirt, and Sand	RFP	280, 369, 413, 421, 803-Rev7, RAV	Trichloroethane, 1,1,1- = TCA	17			17	0	0	43 ppmv	Mean HSG analytical data.	
374	Blacktop, Concrete, Dirt, and Sand	RFP	280, 369, 413, 421, 803-Rev7, RAV	Trichloroethylene = Trichloroethene = TCE	17			17	0	0	9 ppmv	Mean HSG analytical data.	
374	Blacktop, Concrete, Dirt, and Sand	RFP	CLM	Vermiculite	0			0	0	0			
374	Blacktop, Concrete, Dirt, and Sand	RFP	CLM	Waste Description: Blacktop, concrete, bricks, dirt, sand, surgeons gloves, syringes.	N/A	N/A	N/A	N/A	N/A	N/A		IDCs 90 and 990 replaced by IDC 374 in 1975.	
374	Blacktop, Concrete, Dirt, and Sand	RFP	280, 369, 421, RAV	Xylene = C6H4(CH3)2 = Dimethyl benzene	16			16	0	0	46 ppmv	Mean HSG analytical data.	
375	Oil-Dri Residues from Incinerator (MW)	RFP	280, 803-Rev7	Acetone = Dimethyl ketone	19			19	0	0		Note for RGN: See INEL-96/0280 Acceptable Knowledge - Acetone was not one of the commonly used solvents and should only be present in trace amounts.	D004-D011, D022, F001-F003, F005
375	Oil-Dri Residues from Incinerator (MW)	RFP	803-Rev7	Arsenic = As	24			24	0	0			
375	Oil-Dri Residues from Incinerator (MW)	RFP	803-Rev7	Barium = Be	21	24	107	24	0	0			
375	Oil-Dri Residues from Incinerator (MW)	RFP	803-Rev7	Cadmium = Cd	23	24		24	0	0			
375	Oil-Dri Residues from Incinerator (MW)	RFP	280, 369, 413, 421, 803-Rev7, RAV	Carbon Tetrachloride = CCl4 = Tetrachloromethane	17			17	0	0	0.07	Organic solvents are assumed to be present in trace amounts similar to the combustible wastes that the Oil-Dri was removed from prior to incineration in the Bldg. 771 plutonium recovery incinerator.	
375	Oil-Dri Residues from Incinerator (MW)	RFP	280, 803-Rev7	Chloroform = Trichloromethane	17			17	0	0		Note for RGN: See INEL-96/0280 Acceptable Knowledge - Chloroform was not one of the commonly used solvents and should only be present in trace amounts.	
375	Oil-Dri Residues from Incinerator (MW)	RFP	803-Rev7	Chromium = Cr	23	24		24	0	0			
375	Oil-Dri Residues from Incinerator (MW)	RFP	369, 413, 421, 803-Rev7, RAV	Freon = 1,1,2-Trichloro-1,2,2-Trifluoroethane	17			17	0	0	0.01	Characteristic: Toxic	
375	Oil-Dri Residues from Incinerator (MW)	RFP	803-Rev7	Lead = Pb	23	24		24	0	0			
375	Oil-Dri Residues from Incinerator (MW)	RFP	803-Rev7	Mercury = Hg	24			24	0	0			
375	Oil-Dri Residues from Incinerator (MW)	RFP	280, 803-Rev7	Methanol = Methyl Alcohol = CH3OH	4			4	0	0		Note for RGN: See INEL-96/0280 Acceptable Knowledge - Methanol was not one of the commonly used solvents and should only be present in trace amounts.	
375	Oil-Dri Residues from Incinerator (MW)	RFP	369, 413, 421, 803-Rev7, RAV	Methylene Chloride = CH2Cl2 = Dichloromethane	17			17	0	0	0.005	Characteristic: Toxic	
375	Oil-Dri Residues from Incinerator (MW)	RFP	CLM	Oil-Dri	0			0	0	0			
375	Oil-Dri Residues from Incinerator (MW)	RFP	803-Rev7	Selenium = Se	22	23	24	24	0	0			
375	Oil-Dri Residues from Incinerator (MW)	RFP	803-Rev7	Silver = Ag	24			24	0	0			
375	Oil-Dri Residues from Incinerator (MW)	RFP	280, 803-Rev7	Toluene = Toluol = Methylbenzene	16			16	0	0		Note for RGN: See INEL-96/0280 Acceptable Knowledge - Toluene was not one of the commonly used solvents and should only be present in trace amounts.	
375	Oil-Dri Residues from Incinerator (MW)	RFP	369, 413, 421, 803-Rev7, RAV	Trichloroethane, 1,1,1- = TCA	17			17	0	0	0.02	Characteristic: Toxic	
375	Oil-Dri Residues from Incinerator (MW)	RFP	280, 803-Rev7	Trichloroethylene = Trichloroethene = TCE	17			17	0	0		Note for RGN: See INEL-96/0280 Acceptable Knowledge - Even though TCE was one of the commonly used solvents, it is assumed that only trace amounts are present in this waste form.	
375	Oil-Dri Residues from Incinerator (MW)	RFP	CLM	Vermiculite	0			0	0	0			
375	Oil-Dri Residues from Incinerator (MW)	RFP	CLM	Waste Description: Specifics unknown. Part of the waste is believed to be Oil-Dri (trade name) absorbent.	N/A	N/A	N/A	N/A	N/A	N/A			
375	Oil-Dri Residues from Incinerator (MW)	RFP	280, 803-Rev7	Xylene = C6H4(CH3)2 = Dimethyl benzene	16			16	0	0		Note for RGN: See INEL-96/0280 Acceptable Knowledge - Xylene was not one of the commonly used solvents and should only be present in trace amounts.	
376	Cemented Insulation and Filter Media (MW)	RFP	CLM	Aluminum = Al	22	23		23	0	0			D005, D007-D009, D011, D022, F001-F002, F005-F007, F009
376	Cemented Insulation and Filter Media (MW)	RFP	803-Rev7, RAV	Asbestos	0			0	0	0	5		
376	Cemented Insulation and Filter Media (MW)	RFP	803-Rev7	Barium = Be	21	24	107	24	0	0			
376	Cemented Insulation and Filter Media (MW)	RFP	280, 803-Rev7	Benzene	16			16	0	0	1 ppmv	Mean HSG analytical data.	
376	Cemented Insulation and Filter Media (MW)	RFP	280, 369, 413, 421, 803-Rev7, RAV	Carbon Tetrachloride = CCl4 = Tetrachloromethane	17			17	0	0	100 ppmv	Mean HSG analytical data.	
376	Cemented Insulation and Filter Media (MW)	RFP	280, 803-Rev7	Chloroform = Trichloromethane	17			17	0	0	0.9 ppmv	New constituent identified (per EDF-803, Rev 7). Mean HSG analytical data.	
376	Cemented Insulation and Filter Media (MW)	RFP	803-Rev7	Chromium = Cr	23	24		24	0	0			
376	Cemented Insulation and Filter Media (MW)	RFP	280, 803-Rev7	Cyanide cleaning bath solutions	11			11	0	0		Note for RGN: See INEL-96/0280 Acceptable Knowledge - The materials do not contain cyanides or sulfides and are not capable of detonation or explosive reaction.	
376	Cemented Insulation and Filter Media (MW)	RFP	280, 803-Rev7	Cyanide plating bath solutions	11			11	0	0		Note for RGN: See INEL-96/0280 Acceptable Knowledge - The materials do not contain cyanides or sulfides and are not capable of detonation or explosive reaction.	
376	Cemented Insulation and Filter Media (MW)	RFP	280, CLM	Filters	101			101	0	0		Note for RGN: See INEL-96/0280 Acceptable Knowledge - Does not meet the definition of ignitability as defined in 40 CFR 261.21.	
376	Cemented Insulation and Filter Media (MW)	RFP	280, 369, 413, 421, 803-Rev7, RAV	Freon = 1,1,2-Trichloro-1,2,2-Trifluoroethane	17			17	0	0	80 ppmv	Mean HSG analytical data.	
376	Cemented Insulation and Filter Media (MW)	RFP	803-Rev7	Lead = Pb	23	24		24	0	0			
376	Cemented Insulation and Filter Media (MW)	RFP	803-Rev7	Mercury = Hg	24			24	0	0		New constituent identified (per EDF-803, Rev 7)	
376	Cemented Insulation and Filter Media (MW)	RFP	280, 369, 413, 421, 803-Rev7, RAV	Methylene Chloride = CH2Cl2 = Dichloromethane	17			17	0	0	11 ppmv	Mean HSG analytical data.	
376	Cemented Insulation and Filter Media (MW)	RFP	CLM	Nitric Acid = HNO3	2			2	0	0			
376	Cemented Insulation and Filter Media (MW)	RFP	CLM	Oil-Dri	0			0	0	0			
376	Cemented Insulation and Filter Media (MW)	RFP	280, 803-Rev7	Perclene = Perchloroethylene = Tetrachloroethene 1,1,2,2-	17			17	0	0	0.1 ppmv	New constituent identified (per EDF-803, Rev 7). Mean HSG analytical data.	
376	Cemented Insulation and Filter Media (MW)	RFP	CLM	Portland Cement	0			0	0	0			
376	Cemented Insulation and Filter Media (MW)	RFP	803-Rev7	Silver = Ag	24			24	0	0			
376	Cemented Insulation and Filter Media (MW)	RFP	280, 803-Rev7	Toluene = Toluol = Methylbenzene	16			16	0	0	20 ppmv	Mean HSG analytical data.	

376	Cemented Insulation and Filter Media (MW)	RFP	280, 389, 413, 421, 803-Rev7, RAV	Trichloroethane, 1,1,1- = TCA	17			17	0	0	41 ppmv	Mean HSG analytical data.	
376	Cemented Insulation and Filter Media (MW)	RFP	280, 803-Rev7	Trichloroethylene = Trichloroethene = TCE	17			17	0	0	4 ppmv	New constituent identified (per EDF-803, Rev 7). Mean HSG analytical data.	
376	Cemented Insulation and Filter Media (MW)	RFP	CLM	Vermiculite	0			0	0	0			
376	Cemented Insulation and Filter Media (MW)	RFP	CLM	Waste Description: Pre-1979 Filter media. Post 1979 Cemented filters and filter media.	N/A	N/A	N/A	N/A	N/A	N/A			
376	Cemented Insulation and Filter Media (MW)	RFP	CLM	Wood	101			101	0	0		Based on the waste description, combustible/flammable materials are assumed to be a minor component of the waste.	
376	Cemented Insulation and Filter Media (MW)	RFP	280, 803-Rev7	Xylene = C6H4(CH3)2 = Dimethyl benzene	16			16	0	0	0.7 ppmv	Mean HSG analytical data.	
377	Coarse Firebrick (MW)	RFP	280, 803-Rev7	Acetone = Dimethyl ketone	19			19	0	0	7 ppmv	New constituent identified (per EDF-803, Rev 7). Mean HSG analytical data.	
377	Coarse Firebrick (MW)	RFP	803-Rev7	Arsenic = As	24			24	0	0			D004-D011, F001-F003, F005-F007, F009
377	Coarse Firebrick (MW)	RFP	803-Rev7	Barium = Ba	21	24	107	24	0	0			
377	Coarse Firebrick (MW)	RFP	280, 803-Rev7	Benzene	16			16	0	0	0.2 ppmv	New constituent identified (per EDF-803, Rev 7). Mean HSG analytical data.	
377	Coarse Firebrick (MW)	RFP	803-Rev7	Cadmium = Cd	23	24		24	0	0			
377	Coarse Firebrick (MW)	RFP	280, 803-Rev7	Carbon Tetrachloride = CCl4 = Tetrachloromethane	17			17	0	0	8 ppmv	New constituent identified (per EDF-803, Rev 7). Mean HSG analytical data.	
377	Coarse Firebrick (MW)	RFP	803-Rev7	Chromium = Cr	23	24		24	0	0			
377	Coarse Firebrick (MW)	RFP	280, 803-Rev7	Freon = 1,1,2-Trichloro-1,2,2-Trifluoroethane	17			17	0	0	0.1 ppmv	New constituent identified (per EDF-803, Rev 7). Mean HSG analytical data.	
377	Coarse Firebrick (MW)	RFP	803-Rev7	Lead = Pb	23	24		23	0	0			
377	Coarse Firebrick (MW)	RFP	803-Rev7	Mercury = Hg	24			24	0	0			
377	Coarse Firebrick (MW)	RFP	280, 803-Rev7	Methanol = Methyl Alcohol = CH3OH	4			4	0	0	3 ppmv	New constituent identified (per EDF-803, Rev 7). Mean HSG analytical data.	
377	Coarse Firebrick (MW)	RFP	803-Rev7	Methylene Chloride = CH2Cl2 = Dichloromethane	17			17	0	0			
377	Coarse Firebrick (MW)	RFP	280, 803-Rev7	Perclene = Perchloroethylene = Tetrachloroethene, 1,1,2,2-	17			17	0	0	0.7 ppmv	New constituent identified (per EDF-803, Rev 7). Mean HSG analytical data.	
377	Coarse Firebrick (MW)	RFP	803-Rev7	Selenium = Se	22	23	24	24	0	0			
377	Coarse Firebrick (MW)	RFP	803-Rev7	Silver = Ag	24			24	0	0			
377	Coarse Firebrick (MW)	RFP	280, 803-Rev7	Toluene = Toluol = Methylbenzene	16			16	0	0	9 ppmv	Mean HSG analytical data.	
377	Coarse Firebrick (MW)	RFP	280, 803-Rev7	Trichloroethane, 1,1,1- = TCA	17			17	0	0	45 ppmv	Mean HSG analytical data.	
377	Coarse Firebrick (MW)	RFP	280, 803-Rev7	Trichloroethylene = Trichloroethene = TCE	17			17	0	0	41 ppmv	New constituent identified (per EDF-803, Rev 7). Mean HSG analytical data.	
377	Coarse Firebrick (MW)	RFP	389	Waste Description: Similar to Code 371. Bricks contaminated with above discard amounts of plutonium are "scarfed" to remove excess plutonium prior to packaging for disposal.	N/A	N/A	N/A	N/A	N/A	N/A			
377	Coarse Firebrick (MW)	RFP	280, 803-Rev7	Xylene = C6H4(CH3)2 = Dimethyl benzene	16			16	0	0	0.4 ppmv	Mean HSG analytical data.	
391	Crucible and Sand (ROW)	RFP	389, CLM, 803-Rev7	Waste Description: Magnesium oxide crucibles and some magnesium oxide sand.	None	None	None	None	None	None		ROW assumed to have no RGNs.	None
392	Sand, Slag, and Crucibles (ROW)	RFP	280, 389, 803-Rev7	Waste Description: Consists of unpulverized magnesium oxide crucibles, calcium fluoride slag, and limited amounts of magnesium oxide sand.	None	None	None	None	None	None		ROW assumed to have no RGNs.	None
393	Sand, Slag, and Crucible Heels (MW)	RFP	389	Calcium Fluoride = CaF2	15			15	0	0		Note for RGN: Reaction between Calcium Fluoride and Acid already occurred.	D007
393	Sand, Slag, and Crucible Heels (MW)	RFP	280, 803-Rev7	Carbon Tetrachloride = CCl4 = Tetrachloromethane	17			17	0	0		INEL-95/0280 states that this waste was not exposed to characteristic or listed organic solvents.	
393	Sand, Slag, and Crucible Heels (MW)	RFP	280, 803-Rev7	Chloroform = Trichloromethane	17			17	0	0		INEL-95/0280 states that this waste was not exposed to characteristic or listed organic solvents.	
393	Sand, Slag, and Crucible Heels (MW)	RFP	803-Rev7	Chromium = Cr	23	24		24	0	0			
393	Sand, Slag, and Crucible Heels (MW)	RFP	389, CLM	Magnesium Oxide = MgO = Periclase	24			24	0	0			
393	Sand, Slag, and Crucible Heels (MW)	RFP	280, 803-Rev7	Methylene Chloride = CH2Cl2 = Dichloromethane	17			17	0	0		INEL-95/0280 states that this waste was not exposed to characteristic or listed organic solvents.	
393	Sand, Slag, and Crucible Heels (MW)	RFP	12, 280, 389, 803-Rev7, CLM	Nitric Acid = HNO3	2			2	0	0		Not listed as corrosive in INEL-95/0280 or EDF-803 or RPT-12	
393	Sand, Slag, and Crucible Heels (MW)	RFP	CLM	Oil-On	0			0	0	0			
393	Sand, Slag, and Crucible Heels (MW)	RFP	280, 803-Rev7	Toluene = Toluol = Methylbenzene	16			16	0	0		INEL-95/0280 states that this waste was not exposed to characteristic or listed organic solvents.	
393	Sand, Slag, and Crucible Heels (MW)	RFP	280, 803-Rev7	Trichloroethane, 1,1,1- = TCA	17			17	0	0		INEL-95/0280 states that this waste was not exposed to characteristic or listed organic solvents.	
393	Sand, Slag, and Crucible Heels (MW)	RFP	CLM	Vermiculite	0			0	0	0			
393	Sand, Slag, and Crucible Heels (MW)	RFP	CLM	Waste Description: Residue from processing magnesium oxide sand, slag and magnesium oxide crucibles.	N/A	N/A	N/A	N/A	N/A	N/A			
409	Molten Salts, 30% Unpulverized (ROW)	RFP	12, 280, 421, 803-Rev7, RAV	Waste Description: Primarily fused halide salt mixture of NaCl, KCl, and MgCl2. Used to pyrochemically remove americium from plutonium metal. Salt waste generated from cleanup of spent salts.	None	None	None	None	None	None		INEL-95/0280 states that this waste was not exposed to characteristic or listed organic solvents and is nonhazardous waste. RPT-12 also lists the waste as ROW. EDF-803 lists this waste as mixed with D028, F001, and F002 MWIs. ROW assumed to have no RGNs.	None
410	Molten Salts, 30% Pulverized (ROW)	RFP	803-Rev7, CLM	Waste Description: Fused halide salt mixture of NaCl, KCl, and MgCl2 in mole percentages of 47-47-6, respectively. Salt was dry when packaged.	None	None	None	None	None	None		ROW assumed to have no RGNs.	None
411	Electrorefining Salt (ROW)	RFP	803-Rev7, CLM	Waste Description: Fused halide salt mixtures from electrorefining processes. The salt was dry when packaged.	None	None	None	None	None	None		ROW assumed to have no RGNs.	None

412	Gibson Salts (ROW)	RFP	603-Rev7, CLM	Waste Description: Fused halide salt mixtures used in a pyroredox R&D project. CaCl2-KCl (mole% = 74-26, respectively). The waste was dried when packaged.	None	None	None	None	None	None		ROW assumed to have no RGNs.	None
414	Direct Oxide Reduction Salt (ROW)	RFP	12, 280, 369, 603-Rev7	Waste Description: Consists of a calcium chloride salt that is used in the reduction of plutonium oxide to the metal. When plutonium oxide is reduced to the metal, the calcium is converted to the oxide.	None	None	None	None	None	None		INEL-96/0280 states that this waste was not exposed to characteristic or listed organic solvents and is nonhazardous waste. RPT-12 also lists the waste as ROW. EDF-603 lists this waste as mixed with F001 and F002 HWNs. ROW assumed to have no RGNs.	None
416	Zinc-Magnesium Alloy Metal (ROW)	RFP	369, 413, 421, 603-Rev7	Waste Description: Small billets of zinc-magnesium alloy metal used in R&D salt cleanup project. The INEL-TCWCIS description is incorrect in listing the metal as zinc-manganese. The waste is dry when packaged.	None	None	None	None	None	None		ROW assumed to have no RGNs.	None
420	Ash, Incinerator (Virgin) (MW)	RFP	603-Rev7	Arsenic = As	24			24	0	0			D004-D011, D029, F001-F003, F005
420	Ash, Incinerator (Virgin) (MW)	RFP	CLM	Ash	0			0	0	0			
420	Ash, Incinerator (Virgin) (MW)	RFP	603-Rev7	Barium = Ba	21	24	107	24	0	0			
420	Ash, Incinerator (Virgin) (MW)	RFP	603-Rev7	Cadmium = Cd	23	24		24	0	0			
420	Ash, Incinerator (Virgin) (MW)	RFP	603-Rev7	Chromium = Cr	23	24		24	0	0			
420	Ash, Incinerator (Virgin) (MW)	RFP	603-Rev7	Lead = Pb	23	24		24	0	0			
420	Ash, Incinerator (Virgin) (MW)	RFP	603-Rev7	Mercury = Hg	24			24	0	0			
420	Ash, Incinerator (Virgin) (MW)	RFP	603-Rev7	Methylene Chloride = CH2Cl2 = Dichloromethane	17			17	0	0		Trace organic solvent concentrations should be similar to IDCs 292, 371, and 377.	
420	Ash, Incinerator (Virgin) (MW)	RFP	12, 280, 603-Rev7, CLM	Nitric Acid = HNO3	2			2	0	0		Waste stream is not listed as D002 corrosive waste in INEL-96/0280 or EDF-603/RPT-12.	
420	Ash, Incinerator (Virgin) (MW)	RFP	603-Rev7	Selenium = Se	22	23	24	24	0	0			
420	Ash, Incinerator (Virgin) (MW)	RFP	603-Rev7	Silver = Ag	24			24	0	0			
420	Ash, Incinerator (Virgin) (MW)	RFP	603-Rev7	Toluene = Toluol = Methylbenzene	16			16	0	0		Trace organic solvent concentrations should be similar to IDCs 292, 371, and 377.	
420	Ash, Incinerator (Virgin) (MW)	RFP	603-Rev7	Trichloroethane, 1,1,1- = TCA	17			17	0	0		Trace organic solvent concentrations should be similar to IDCs 292, 371, and 377.	
420	Ash, Incinerator (Virgin) (MW)	RFP	CLM	Waste Description: Ash generated from incineration of combustible wastes contaminated with above-discard amounts of plutonium. Waste is dry when packaged.	N/A	N/A	N/A	N/A	N/A	N/A			
420	Ash, Incinerator (Virgin) (MW)	RFP	603-Rev7	Xylene = C6H4(CH3)2 = Dimethyl benzene	18			18	0	0		Trace organic solvent concentrations should be similar to IDCs 292, 371, and 377.	
421	Heels, Ash (>2% G/G) (MW)	RFP	603-Rev7	Arsenic = As	24			24	0	0			D004-D011, D029, F001-F003, F005
421	Heels, Ash (>2% G/G) (MW)	RFP	CLM	Ash	0			0	0	0			
421	Heels, Ash (>2% G/G) (MW)	RFP	603-Rev7	Barium = Ba	21	24	107	24	0	0			
421	Heels, Ash (>2% G/G) (MW)	RFP	603-Rev7	Cadmium = Cd	23	24		24	0	0			
421	Heels, Ash (>2% G/G) (MW)	RFP	603-Rev7	Chromium = Cr	23	24		24	0	0			
421	Heels, Ash (>2% G/G) (MW)	RFP	603-Rev7	Lead = Pb	23	24		24	0	0			
421	Heels, Ash (>2% G/G) (MW)	RFP	603-Rev7	Mercury = Hg	24			24	0	0			
421	Heels, Ash (>2% G/G) (MW)	RFP	603-Rev7	Methylene Chloride = CH2Cl2 = Dichloromethane	17			17	0	0		Trace organic solvent concentrations should be similar to IDCs 292, 371, and 377.	
421	Heels, Ash (>2% G/G) (MW)	RFP	12, 280, 369, 603-Rev7, CLM	Nitric Acid = HNO3	2			2	0	0		Waste stream is not listed as D002 corrosive waste in INEL-96/0280 or EDF-603/RPT-12.	
421	Heels, Ash (>2% G/G) (MW)	RFP	603-Rev7	Selenium = Se	22	23	24	24	0	0			
421	Heels, Ash (>2% G/G) (MW)	RFP	603-Rev7	Silver = Ag	24			24	0	0			
421	Heels, Ash (>2% G/G) (MW)	RFP	603-Rev7	Toluene = Toluol = Methylbenzene	16			16	0	0		Trace organic solvent concentrations should be similar to IDCs 292, 371, and 377.	
421	Heels, Ash (>2% G/G) (MW)	RFP	603-Rev7	Trichloroethane, 1,1,1- = TCA	17			17	0	0		Trace organic solvent concentrations should be similar to IDCs 292, 371, and 377.	
421	Heels, Ash (>2% G/G) (MW)	RFP	CLM	Waste Description: Insoluble insulation residue or "heel" from processing above-discard contaminated incinerator ash. Waste is dry when packaged	N/A	N/A	N/A	N/A	N/A	N/A			
422	Soot (MW)	RFP	603-Rev7	Arsenic = As	24			24	0	0			D004-D011, D029, F001-F003, F005
422	Soot (MW)	RFP	603-Rev7	Barium = Ba	21	24	107	24	0	0			
422	Soot (MW)	RFP	603-Rev7	Cadmium = Cd	23	24		24	0	0			
422	Soot (MW)	RFP	603-Rev7	Chromium = Cr	23	24		24	0	0			
422	Soot (MW)	RFP	603-Rev7	Dichloroethene, 1,1- = Dichloroethylene, 1,1-	17			17	0	0		Trace organic solvent concentrations should be similar to IDCs 292, 371, and 377.	
422	Soot (MW)	RFP	603-Rev7	Freon = 1,1,2-Trichloro-1,2,2-Trifluoroethane	17			17	0	0		Trace organic solvent concentrations should be similar to IDCs 292, 371, and 377.	
422	Soot (MW)	RFP	603-Rev7	Lead = Pb	23	24		24	0	0			
422	Soot (MW)	RFP	603-Rev7	Mercury = Hg	24			24	0	0			
422	Soot (MW)	RFP	603-Rev7	Methylene Chloride = CH2Cl2 = Dichloromethane	17			17	0	0		Trace organic solvent concentrations should be similar to IDCs 292, 371, and 377.	
422	Soot (MW)	RFP	603-Rev7	Selenium = Se	22	23	24	24	0	0			
422	Soot (MW)	RFP	603-Rev7	Silver = Ag	24			24	0	0			
422	Soot (MW)	RFP	CLM	Soot	0			0	0	0			
422	Soot (MW)	RFP	603-Rev7	Toluene = Toluol = Methylbenzene	16			16	0	0		Trace organic solvent concentrations should be similar to IDCs 292, 371, and 377.	
422	Soot (MW)	RFP	603-Rev7	Trichloroethane, 1,1,1- = TCA	17			17	0	0		Trace organic solvent concentrations should be similar to IDCs 292, 371, and 377.	
422	Soot (MW)	RFP	CLM	Waste Description: Soot or flyash generated from the periodic cleaning of the Plutonium Recovery incinerator off-gas system. Dry when packaged	N/A	N/A	N/A	N/A	N/A	N/A			
422	Soot (MW)	RFP	603-Rev7	Xylene = C6H4(CH3)2 = Dimethyl benzene	16			16	0	0		Trace organic solvent concentrations should be similar to IDCs 292, 371, and 377.	
425	Fluid Bed Ash (MW)	RFP	CLM	Ash	0			0	0	0			D007, F003, F005
425	Fluid Bed Ash (MW)	RFP	280, 603-Rev7	Chromium = Cr	23	24		24	0	0	0.7-1.8 wt%	Ash metals analytical data.	
425	Fluid Bed Ash (MW)	RFP	603-Rev7	Methanol = Methyl Alcohol = CH3OH	4			4	0	0		Trace organic solvent concentrations should be similar to IDCs 292, 371, and 377.	
425	Fluid Bed Ash (MW)	RFP	603-Rev7	Methyl ethyl ketone = Butanone	19			19	0	0		Trace organic solvent concentrations should be similar to IDCs 292, 371, and 377.	
425	Fluid Bed Ash (MW)	RFP	603-Rev7	Toluene = Toluol = Methylbenzene	16			16	0	0		Trace organic solvent concentrations should be similar to IDCs 292, 371, and 377.	
425	Fluid Bed Ash (MW)	RFP	CLM	Waste Description: Ash generated from the experimental pilot and demonstration Fluid Bed incinerator plants. Waste is dry when packaged	N/A	N/A	N/A	N/A	N/A	N/A			
430	Resin, Ion Column-Unleached (MW)	RFP	CLM	Divinylbenzene	101			101	0	0			D001
430	Resin, Ion Column-Unleached (MW)	RFP	369	Nitrated Ion Exchange Resin	101			101	0	0		Characteristic: Ignitability	
430	Resin, Ion Column-Unleached (MW)	RFP	12, 413, 421, 603-Rev7	Nitrates	104			104	104	104		Waste is listed as D001 ignitable waste in EDF-603 and RPT-12 due to nitrates.	

430	Resin, Ion Column-Unleached (MW)	RFP	12, 389, 803-Rev7, CLM	Nitric Acid = HNO3	2			2	0	0		Plutonium-loaded and nitrated ion-exchange resin has an ignition temperature of 183 degrees celcius. The resin-ignition behavior would generally be a deflagration rather than a detonation. Waste is not listed as corrosive in EDF-803 or RPT-12.	
430	Resin, Ion Column-Unleached (MW)	RFP	CLM	Oil-On	0			0	0	0			
430	Resin, Ion Column-Unleached (MW)	RFP	CLM	Polystyrene	101			101	0	0			
430	Resin, Ion Column-Unleached (MW)	RFP	CLM	Vermiculite	0			0	0	0			
430	Resin, Ion Column-Unleached (MW)	RFP	CLM	Waste Description: Anion and cation exchange resins. It is believed the resins were not rinsed with water or leached prior to packaging.	N/A	N/A	N/A	N/A	N/A	N/A			
431	Resin, Leached (ROW)	RFP	803-Rev7, CLM	Waste Description: Anion and cation exchange resins. It is believed the resins were processed by leaching to recover the plutonium.	None	None	None	None	None	None		ROW assumed to have no RGNs.	None
432	Resin, Leached and Cemented (MW)	RFP	280, 421, 803-Rev7, RAV	Carbon Tetrachloride = CCl4 = Tetrachloromethane	17			17	0	0		INEL-96/0280 states that characteristic and listed organic solvents were not used in the ion exchange processes and should be present in trace amounts.	D007, D008, D029, F001, F002, F005
432	Resin, Leached and Cemented (MW)	RFP	803-Rev7	Chromium = Cr	23	24		24	0	0			
432	Resin, Leached and Cemented (MW)	RFP	280, 803-Rev7	Dichloroethene, 1,1- = Dichloroethylene, 1,1-	17			17	0	0		Note for RGN: See INEL-96/0280 Acceptable Knowledge - Detected in headspace gas ...source may be from the radiolysis of 1,1,1,-trichloroethane. INEL-96/0280 states that characteristic and listed organic solvents were not used in the ion exchange processes and should be present in trace amounts.	
432	Resin, Leached and Cemented (MW)	RFP	280, CLM	Divinylbenzene	101			101	0	0		Note for RGN: See INEL-96/0280 Acceptable Knowledge - Does not meet the definition of ignitability as defined in 40 CFR 261.21. Although nitrates were associated with the anion exchange process, the resin and washing and cementation process would remove the oxidizer property.	
432	Resin, Leached and Cemented (MW)	RFP	280, 803-Rev7	Isopropanol	4			4	0	0		INEL-96/0280 states that characteristic and listed organic solvents were not used in the ion exchange processes and should be present in trace amounts.	
432	Resin, Leached and Cemented (MW)	RFP	421, 803-Rev7, CLM, RAV	Lead = Pb	23	24		24	0	0		Characteristic: EP Toxic	
432	Resin, Leached and Cemented (MW)	RFP	280, 421, 803-Rev7, RAV	Methylene Chloride = CH2Cl2 = Dichloromethane	17			17	0	0		INEL-96/0280 states that characteristic and listed organic solvents were not used in the ion exchange processes and should be present in trace amounts.	
432	Resin, Leached and Cemented (MW)	RFP	12, 389, 803-Rev7, CLM	Nitric Acid = HNO3	2			2	0	0		Residual nitrates should have been removed by water washing prior to packaging. Cemented resin waste should be a stable waste form. INEL-96/0280 states that although nitrates were associated with the anion exchange process, the resin washing and cementation process removed the oxidizer property. The waste is not listed as corrosive in the report or in EDF-803 or RPT-12.	
432	Resin, Leached and Cemented (MW)	RFP	CLM	Oil-On	0			0	0	0			
432	Resin, Leached and Cemented (MW)	RFP	280, CLM	Polystyrene	101			101	0	0		Note for RGN: See INEL-96/0280 Acceptable Knowledge - Does not meet the definition of ignitability as defined in 40 CFR 261.21. Although nitrates were associated with the anion exchange process, the resin and washing and cementation process would remove the oxidizer property.	
432	Resin, Leached and Cemented (MW)	RFP	CLM	Portland Cement	0			0	0	0			
432	Resin, Leached and Cemented (MW)	RFP	280, 803-Rev7	Toluene = Toluol = Methylbenzene	16			16	0	0		Note for RGN: See INEL-96/0280 Acceptable Knowledge - Headspace samples: the 90% UCL is above the PRQL. Characteristic: Toxic, INEL-96/0280 states that characteristic and listed organic solvents were not used in the ion exchange processes and should be present in trace amounts.	
432	Resin, Leached and Cemented (MW)	RFP	280, 421, 803-Rev7, RAV	Trichloroethane, 1,1,1- = TCA	17			17	0	0		Note for RGN: See INEL-96/0280 Acceptable Knowledge - Headspace samples: the 90% UCL is above the PRQL. Characteristic: Toxic, INEL-96/0280 states that characteristic and listed organic solvents were not used in the ion exchange processes and should be present in trace amounts.	
432	Resin, Leached and Cemented (MW)	RFP	280, 421, 803-Rev7, RAV	Trichloroethylene = Trichloroethene = TCE	17			17	0	0		Note for RGN: See INEL-96/0280 Acceptable Knowledge - Headspace samples: the 90% UCL is above the PRQL. INEL-96/0280 states that characteristic and listed organic solvents were not used in the ion exchange processes and should be present in trace amounts.	
432	Resin, Leached and Cemented (MW)	RFP	CLM	Vermiculite	0			0	0	0			
432	Resin, Leached and Cemented (MW)	RFP	CLM	Waste Description: Anion and cation exchange resins. Resins are leached and cemented before disposal.	N/A	N/A	N/A	N/A	N/A	N/A			
440	Glass (MW)	RFP	803-Rev7	Barium = Ba	21	24	107	24	0	0			D002, D005, D008, D009, D022, F001, F002, F005
440	Glass (MW)	RFP	280, 803-Rev7	Benzene	16			16	0	0	0.6 ppmv	New constituent identified (per EDF-803, Rev 7). Mean HSG analytical data.	
440	Glass (MW)	RFP	280, 803-Rev7	Carbon disulfide = carbon disulfide	20			20	0	0		New constituent identified (per EDF-803, Rev 7). INEL-96/0280 states that carbon disulfide was used in laboratory operations but it is expected to be in trace amounts.	
440	Glass (MW)	RFP	280, 803-Rev7, RAV	Carbon Tetrachloride = CCl4 = Tetrachloromethane	17			17	0	0	3 ppmv	Mean HSG analytical data.	
440	Glass (MW)	RFP	280, 803-Rev7	Chloroform = Trichloromethane	17			17	0	0	6 ppmv	New constituent identified (per EDF-803, Rev 7). Mean HSG analytical data.	
440	Glass (MW)	RFP	12, 280, 413, 803-Rev7	Cyclohexane	29			29	0	0	140 ppmv	Mean HSG analytical data. Listed as D001 for cyclohexane in EDF-803, but HSG analytical results show that this RGN is not warranted and RPT-12 does not list the waste as D001 for cyclohexane.	
440	Glass (MW)	RFP	280, RAV	Dichloroethane, 1,1- = Dichloroethylene, 1,1-	17			17	0	0	1 ppmv	Mean HSG analytical data.	
440	Glass (MW)	RFP	280, 803-Rev7	Freon = 1,1,2-Trichloro-1,2,2-Trifluoroethane	17			17	0	0	1 ppmv	New constituent identified (per EDF-803, Rev 7). Mean HSG analytical data.	
440	Glass (MW)	RFP	CLM	Glass	0			0	0	0			
440	Glass (MW)	RFP	421, 803-Rev7, CLM, RAV	Lead = Pb	23	24		23	0	0		Characteristic: EP Toxic	
440	Glass (MW)	RFP	803-Rev7	Mercury = Hg	24			24	0	0			
440	Glass (MW)	RFP	280, 421, 803-Rev7, RAV	Methylene Chloride = CH2Cl2 = Dichloromethane	17			17	0	0	4 ppmv	Mean HSG analytical data.	

440	Glass (MW)	RFP	12, 280, CLM	Nitric Acid = HNO3	2			2	0	0		INEL-96/0280 states that free liquids found in this waste have not been corrosive. (However, EDF-803 and RPT-12 still list this waste as D002 corrosive.)	
440	Glass (MW)	RFP	CLM	Oil-Dri	0			0	0	0			
440	Glass (MW)	RFP	280, 803-Rev7	Perclene = Perchloroethylene = Tetrachloroethene, 1,1,2,2-	17			17	0	0	0.4 ppmv	New constituent identified (per EDF-803, Rev 7). Mean HSG analytical data.	
440	Glass (MW)	RFP	280, 803-Rev7, RAV	Toluene = Toluol = Methylbenzene	18			18	0	0	12 ppmv	Mean HSG analytical data.	
440	Glass (MW)	RFP	280, 421, 803-Rev7, RAV	Trichloroethane, 1,1,1- = TCA	17			17	0	0	66 ppmv	Mean HSG analytical data.	
440	Glass (MW)	RFP	280, 803-Rev7, RAV	Trichloroethylene = Trichloroethene = TCE	17			17	0	0	11 ppmv	Mean HSG analytical data.	
440	Glass (MW)	RFP	CLM	Vermiculite	0			0	0	0			
440	Glass (MW)	RFP	CLM	Waste Description: Sample vials, bottles, ion-exchange columns, dissolver pots, . . .	N/A	N/A	N/A	N/A	N/A	N/A			
440	Glass (MW)	RFP	CLM	Wood	101			101	0	0			
440	Glass (MW)	RFP	280, RAV	Xylene = C6H4(CH3)2 = Dimethyl benzene	16			16	0	0	2 ppmv	Mean HSG analytical data.	
441	Unleached Raschig Rings (MW)	RFP	280, 388, 413, 421, 803-Rev7, CLM, RAV	Carbon Tetrachloride = CCl4 = Tetrachloromethane	17			17	0	0	2 ppmv	Mean HSG analytical data.	D002, D006, F001, F002
441	Unleached Raschig Rings (MW)	RFP	280, 803-Rev7	Freon = 1,1,2-Trichloro-1,2,2-Trifluoroethane	17			17	0	0	0.2 ppmv	New constituent identified (per EDF-803, Rev 7). Mean HSG analytical data.	
441	Unleached Raschig Rings (MW)	RFP	421, 803-Rev7, RAV	Lead = Pb	23	24		23	0	0		Characteristic: EP Toxic	
441	Unleached Raschig Rings (MW)	RFP	280, 803-Rev7	Methanol = Methyl Alcohol = CH3OH	4			4	0	0	15 ppmv	Mean HSG analytical data.	
441	Unleached Raschig Rings (MW)	RFP	12, 280, 388, 803-Rev7, CLM	Nitric Acid = HNO3	2			2	0	0		INEL-96/0280 states that small amounts of residual corrosive liquids were addressed by addition of absorbent. (However, EDF-803 and RPT-12 still list this waste as D002 corrosive.)	
441	Unleached Raschig Rings (MW)	RFP	280, 388, CLM	Oil, Tanks	101			101	0	0		Note for RGN: See INEL-96/0280 Acceptable Knowledge - The material is not capable of causing fire through friction, absorption of moisture, or spontaneous chemical change.	
441	Unleached Raschig Rings (MW)	RFP	CLM	Oil-Dri	0			0	0	0			
441	Unleached Raschig Rings (MW)	RFP	280, 803-Rev7	Perclene = Perchloroethylene = Tetrachloroethane, 1,1,2,2-	17			17	0	0	0.2 ppmv	Mean HSG analytical data.	
441	Unleached Raschig Rings (MW)	RFP	CLM	Raschig rings	0			0	0	0			
441	Unleached Raschig Rings (MW)	RFP	280, 388, 413, 421, 803-Rev7, CLM, RAV	Trichloroethane, 1,1,1- = TCA	17			17	0	0	34 ppmv	Mean HSG analytical data.	
441	Unleached Raschig Rings (MW)	RFP	280, 421, 803-Rev7, RAV	Trichloroethylene = Trichloroethene = TCE	17			17	0	0	3 ppmv	Mean HSG analytical data.	
441	Unleached Raschig Rings (MW)	RFP	CLM	Vermiculite	0			0	0	0			
441	Unleached Raschig Rings (MW)	RFP	CLM	Waste Description: Content codes 441 and 442: Borosilicate-glass rings used to minimize neutron multiplication in liquid storage tanks.	N/A	N/A	N/A	N/A	N/A	N/A			
442	Leached Raschig Rings (MW)	RFP	280, RAV	Acetone = Dimethyl ketone	19			19	0	0	8 ppmv	Mean HSG analytical data.	D008, F001, F002
442	Leached Raschig Rings (MW)	RFP	280, RAV	Benzene	16			16	0	0	0.3 ppmv	Mean HSG analytical data.	
442	Leached Raschig Rings (MW)	RFP	280, 421, 803-Rev7, CLM, RAV	Carbon Tetrachloride = CCl4 = Tetrachloromethane	17			17	0	0	2 ppmv	Mean HSG analytical data.	
442	Leached Raschig Rings (MW)	RFP	280, RAV	Dichloroethane, 1,2- = (Ethylene dichloride)	17			17	0	0	0.2 ppmv	Mean HSG analytical data.	
442	Leached Raschig Rings (MW)	RFP	280, RAV	Dichloromethane, 1,1- = Dichloroethylene, 1,1-	17			17	0	0	0.2 ppmv	Mean HSG analytical data.	
442	Leached Raschig Rings (MW)	RFP	280, 803-Rev7, RAV	Freon = 1,1,2-Trichloro-1,2,2-Trifluoroethane	17			17	0	0	0.2 ppmv	Mean HSG analytical data.	
442	Leached Raschig Rings (MW)	RFP	421, 803-Rev7, RAV	Lead = Pb	23	24		23	0	0		Characteristic: EP Toxic	
442	Leached Raschig Rings (MW)	RFP	280, RAV	Methanol = Methyl Alcohol = CH3OH	4			4	0	0	15 ppmv	Mean HSG analytical data.	
442	Leached Raschig Rings (MW)	RFP	280, 421, 803-Rev7, RAV	Methylene Chloride = CH2Cl2 = Dichloromethane	17			17	0	0	2 ppmv	Mean HSG analytical data.	
442	Leached Raschig Rings (MW)	RFP	12, 280, 803-Rev7, CLM	Nitric Acid = HNO3	2			2	0	0		Note for RGN: See INEL-96/0280 Acceptable Knowledge - Waste was rinsed with water prior to addition of absorbent and should not be corrosive. Not listed as corrosive in EDF-803 or RPT-12.	
442	Leached Raschig Rings (MW)	RFP	280, CLM	Oil, Tanks	101			101	0	0		Note for RGN: See INEL-96/0280 Acceptable Knowledge - The material is not capable of causing fire through friction, absorption of moisture, or spontaneous chemical change.	
442	Leached Raschig Rings (MW)	RFP	CLM	Oil-Dri	0			0	0	0			
442	Leached Raschig Rings (MW)	RFP	CLM	Raschig rings	0			0	0	0			
442	Leached Raschig Rings (MW)	RFP	280, RAV	Toluene = Toluol = Methylbenzene	16			16	0	0	2 ppmv	Mean HSG analytical data.	
442	Leached Raschig Rings (MW)	RFP	280, 421, 803-Rev7, CLM, RAV	Trichloroethane, 1,1,1- = TCA	17			17	0	0	34 ppmv	Mean HSG analytical data.	
442	Leached Raschig Rings (MW)	RFP	280, RAV	Trichloroethylene = Trichloroethene = TCE	17			17	0	0	3 ppmv	Mean HSG analytical data.	
442	Leached Raschig Rings (MW)	RFP	CLM	Vermiculite	0			0	0	0			
442	Leached Raschig Rings (MW)	RFP	CLM	Waste Description: Content codes 441 and 442: Borosilicate-glass rings used to minimize neutron multiplication in liquid storage tanks.	N/A	N/A	N/A	N/A	N/A	N/A			
44A	A mixture of waste characterized with IDC codes 440 and 442 (MW)	RFP	803-Rev7	Barium = Ba	21	24	107	24	0	0			D005, D006, D008, F001, F002, F006
44A	A mixture of waste characterized with IDC codes 440 and 442 (MW)	RFP	803-Rev7	Carbon Tetrachloride = CCl4 = Tetrachloromethane	17			17	0	0		Organic solvents assumed to be present in trace amounts based on data for IDCs 440 and 442.	
44A	A mixture of waste characterized with IDC codes 440 and 442 (MW)	RFP	803-Rev7	Cyclohexane	29			29	0	0			

444A	A mixture of waste characterized with IDC codes 440 and 442 (MW)	RFP	803-Rev7	Lead = Pb	23	24		23	0	0			
444A	A mixture of waste characterized with IDC codes 440 and 442 (MW)	RFP	803-Rev7	Mercury = Hg	24			24	0	0			
444A	A mixture of waste characterized with IDC codes 440 and 442 (MW)	RFP	803-Rev7	Methylene Chloride = CH2Cl2 = Dichloromethane	17			17	0	0			
444A	A mixture of waste characterized with IDC codes 440 and 442 (MW)	RFP	803-Rev7	Toluene = Toluol = Methylbenzene	18			18	0	0			
444A	A mixture of waste characterized with IDC codes 440 and 442 (MW)	RFP	803-Rev7	Trichloroethane, 1,1,1- = TCA	17			17	0	0			
444A	A mixture of waste characterized with IDC codes 440 and 442 (MW)	RFP	803-Rev7	Trichloroethylene = Trichloroethene = TCE	17			17	0	0			
460	Washables, Rubber, Plastics (MW)	RFP	369, 413, 421, 803-Rev7, RAV	Carbon Tetrachloride = CCl4 = Tetrachloromethane	17			17	0	0		Characteristic: Toxic	F001, F002
460	Washables, Rubber, Plastics (MW)	RFP	369, 413, 421, 803-Rev7, RAV	Freon = 1,1,2-Trichloro-1,2,2-Trifluoroethane	17			17	0	0		Characteristic: Toxic	
460	Washables, Rubber, Plastics (MW)	RFP	369, 413, 421, 803-Rev7, RAV	Methylene Chloride = CH2Cl2 = Dichloromethane	17			17	0	0		Characteristic: Toxic	
460	Washables, Rubber, Plastics (MW)	RFP	369, 413, 421, 803-Rev7, RAV	Trichloroethane, 1,1,1- = TCA	17			17	0	0		Characteristic: Toxic	
460	Washables, Rubber, Plastics (MW)	RFP	CLM	Waste Description: Unknown. Code 460 used in 1970 only.	N/A	N/A	N/A	N/A	N/A	N/A			
463	Gloves, Drybox/Leaded Rubber Gloves and Aprons (MW)	RFP	421, 803-Rev7, RAV	Carbon Tetrachloride = CCl4 = Tetrachloromethane	17			17	0	0		Organic solvents have been assumed to be present in trace quantities similar to those for IDC 339 and that organic RQNs are not warranted. IDC 463 replaced by 339 in 1973.	D006, F001, F002
463	Gloves, Drybox/Leaded Rubber Gloves and Aprons (MW)	RFP	CLM	Combustibles	101			101	0	0			
463	Gloves, Drybox/Leaded Rubber Gloves and Aprons (MW)	RFP	369, 413, 421, 803-Rev7, CLM, RAV	Lead = Pb	23	24		23	0	0	5E	Characteristic: EP Toxic, Reactivity	
463	Gloves, Drybox/Leaded Rubber Gloves and Aprons (MW)	RFP	421, 803-Rev7, RAV	Methylene Chloride = CH2Cl2 = Dichloromethane	17			17	0	0		Characteristic: Toxic	
463	Gloves, Drybox/Leaded Rubber Gloves and Aprons (MW)	RFP	12, 413, 803-Rev7, CLM	Nitrates	104			104	0	0		Assumed that this waste is similar to IDC 339, where the reactivity characteristic was determined not to apply since conditions favoring formation of lead nitrate and nitro-organic compounds do not exist. Also, EDF-803 and RPT-12 do not list this waste as D001 ignitable for nitrates.	
463	Gloves, Drybox/Leaded Rubber Gloves and Aprons (MW)	RFP	CLM	Oil-Oil	0			0	0	0			
463	Gloves, Drybox/Leaded Rubber Gloves and Aprons (MW)	RFP	CLM	Rubber	101			101	0	0			
463	Gloves, Drybox/Leaded Rubber Gloves and Aprons (MW)	RFP	421, 803-Rev7, RAV	Trichloroethane, 1,1,1- = TCA	17			17	0	0		Characteristic: Toxic	
463	Gloves, Drybox/Leaded Rubber Gloves and Aprons (MW)	RFP	421, 803-Rev7, RAV	Trichloroethylene = Trichloroethene = TCE	17			17	0	0		Characteristic: Toxic	
463	Gloves, Drybox/Leaded Rubber Gloves and Aprons (MW)	RFP	CLM	Vermiculite	0			0	0	0			
463	Gloves, Drybox/Leaded Rubber Gloves and Aprons (MW)	RFP	CLM	Waste Description: See Code 339. Leaded glovebox gloves, aprons. Some unleaded gloves. Lead bricks, lead sheeting.	N/A	N/A	N/A	N/A	N/A	N/A			
464	Benelex and Plexiglas (MW)	RFP	803-Rev7	Beryllium = Be	21	24	107	24	0	0			D005, D008, F001
464	Benelex and Plexiglas (MW)	RFP	280, CLM	Benelex	101			101	0	0		Note for RQN: See INEL-95/0280 Acceptable Knowledge - Does not meet the definition of ignitability as defined in 40 CFR 261.21. Note for RQN: See NOD Response to EPA ID4890008953- Casual or incidental nitration of cellulose is unlikely. Oxidation of organics (rather than nitration), more likely.	
464	Benelex and Plexiglas (MW)	RFP	12, 280, 421, 803-Rev7	Carbon Tetrachloride = CCl4 = Tetrachloromethane	17			17	0	0		Organic solvents used to decontaminate this material are not regulated as toxic or listed wastes and should be present in trace quantities per INEL-95/0280. However, this does not agree with EDF-803 or RPT-12, which list this waste as F001.	
464	Benelex and Plexiglas (MW)	RFP	280, CLM	Combustibles	101			101	0	0		Note for RQN: See INEL-95/0280 Acceptable Knowledge - Does not meet the definition of ignitability as defined in 40 CFR 261.21. Note for RQN: See NOD Response to EPA ID4890008932- Casual or incidental nitration of cellulose is unlikely. Oxidation of organics (rather than nitration), more likely.	
464	Benelex and Plexiglas (MW)	RFP	CLM	Fire-retardant paint	0			0	0	0			
464	Benelex and Plexiglas (MW)	RFP	369, 413, 421, 803-Rev7, CLM, RAV	Lead = Pb	23	24		23	0	0	2S		
464	Benelex and Plexiglas (MW)	RFP	CLM	Methyl methacrylate (Plexiglass)	0			0	0	0			
464	Benelex and Plexiglas (MW)	RFP	CLM	Oil-Oil	0			0	0	0			
464	Benelex and Plexiglas (MW)	RFP	280, CLM	Rubber gaskets	101			101	0	0		Note for RQN: See INEL-95/0280 Acceptable Knowledge - Does not meet the definition of ignitability as defined in 40 CFR 261.21. Note for RQN: See NOD Response to EPA ID4890008932- Casual or incidental nitration of cellulose is unlikely. Oxidation of organics (rather than nitration), more likely.	
464	Benelex and Plexiglas (MW)	RFP	12, 280, 803-Rev7	Toluene = Toluol = Methylbenzene	18			18	0	0		Organic solvents used to decontaminate this material are not regulated as toxic or listed wastes and should be present in trace quantities per INEL-95/0280. However, this does not agree with EDF-803 or RPT-12, which list this waste as F001.	
464	Benelex and Plexiglas (MW)	RFP	12, 280, 421, 803-Rev7, RAV	Trichloroethane, 1,1,1- = TCA	17			17	0	0		Organic solvents used to decontaminate this material are not regulated as toxic or listed wastes and should be present in trace quantities per INEL-95/0280. However, this does not agree with EDF-803 or RPT-12, which list this waste as F001.	
464	Benelex and Plexiglas (MW)	RFP	12, 280, 421, 803-Rev7	Trichloroethylene = Trichloroethene = TCE	17			17	0	0		Organic solvents used to decontaminate this material are not regulated as toxic or listed wastes and should be present in trace quantities per INEL-95/0280. However, this does not agree with EDF-803 or RPT-12, which list this waste as F001.	
464	Benelex and Plexiglas (MW)	RFP	CLM	Vermiculite	0			0	0	0			

464	Benelex and Plexiglas (MW)	RFP	CLM	Waste Description: Benelex - used for neutron shielding. Plexiglass glovebox windows. Lead sheeting (1/8 to 1/4 in thick) may be attached to some Benelex pieces. Benelex was usually coated with fire-retarded paint. Leaded glass may also be present.	N/A	N/A	N/A	N/A	N/A	N/A			
480	Unleached Light Non-Special Source Metal - Fe, Cu, Al, Stainless Steel, etc. (MW)	RFP	280, 803-Rev7, RAV	Acetone = Dimethyl ketone	19			19	0	0	17 ppmv	Mean HSG analytical data.	D001, D006-D009, D011, D026, F001-F003, F005-F007, F009
480	Unleached Light Non-Special Source Metal - Fe, Cu, Al, Stainless Steel, etc. (MW)	RFP	CLM	Aluminum = Al	22	23		23	0	0			
480	Unleached Light Non-Special Source Metal - Fe, Cu, Al, Stainless Steel, etc. (MW)	RFP	803-Rev7	Arsenic = As	24			24	0	0			
480	Unleached Light Non-Special Source Metal - Fe, Cu, Al, Stainless Steel, etc. (MW)	RFP	803-Rev7	Barium = Ba	21	24	107	24	0	0			
480	Unleached Light Non-Special Source Metal - Fe, Cu, Al, Stainless Steel, etc. (MW)	RFP	280, 803-Rev7, RAV	Benzene	18			18	0	0	0.4 ppmv	Mean HSG analytical data.	
480	Unleached Light Non-Special Source Metal - Fe, Cu, Al, Stainless Steel, etc. (MW)	RFP	803-Rev7	Beryllium = Be	24			24	0	0			
480	Unleached Light Non-Special Source Metal - Fe, Cu, Al, Stainless Steel, etc. (MW)	RFP	803-Rev7	Cadmium = Cd	23	24		24	0	0			
480	Unleached Light Non-Special Source Metal - Fe, Cu, Al, Stainless Steel, etc. (MW)	RFP	280, 803-Rev7	Carbon disulfide = carbon bisulfide	20			20	0	0		New constituent identified (per EDF-803, Rev 7). CS2 concentration expected to be minimal, since limited use in laboratories.	
480	Unleached Light Non-Special Source Metal - Fe, Cu, Al, Stainless Steel, etc. (MW)	RFP	280, 369, 413, 421, 803-Rev7, RAV	Carbon Tetrachloride = CCl4 = Tetrachloromethane	17			17	0	0	8 ppmv	Mean HSG analytical data.	
480	Unleached Light Non-Special Source Metal - Fe, Cu, Al, Stainless Steel, etc. (MW)	RFP	803-Rev7	Chromium = Cr	23	24		24	0	0			
480	Unleached Light Non-Special Source Metal - Fe, Cu, Al, Stainless Steel, etc. (MW)	RFP	CLM	Copper = Cu	23	24		24	0	0			
480	Unleached Light Non-Special Source Metal - Fe, Cu, Al, Stainless Steel, etc. (MW)	RFP	CLM	Crushed 55-gallon drums	23			23	0	0			
480	Unleached Light Non-Special Source Metal - Fe, Cu, Al, Stainless Steel, etc. (MW)	RFP	280, 803-Rev7	Cyanide	11			11	0	0		Note for RGN: See INEL-96/0280 Acceptable Knowledge - The materials do not contain cyanides or sulfides and are not capable of detonation or explosive reaction.	
480	Unleached Light Non-Special Source Metal - Fe, Cu, Al, Stainless Steel, etc. (MW)	RFP	280, 803-Rev7	Cyanide cleaning bath solutions	11			11	0	0		Note for RGN: See INEL-96/0280 Acceptable Knowledge - The materials do not contain cyanides or sulfides and are not capable of detonation or explosive reaction.	
480	Unleached Light Non-Special Source Metal - Fe, Cu, Al, Stainless Steel, etc. (MW)	RFP	280, 803-Rev7	Cyanide plating bath solutions	11			11	0	0		Note for RGN: See INEL-96/0280 Acceptable Knowledge - The materials do not contain cyanides or sulfides and are not capable of detonation or explosive reaction.	
480	Unleached Light Non-Special Source Metal - Fe, Cu, Al, Stainless Steel, etc. (MW)	RFP	12, 280, 803-Rev7	Cyclohexane	29			29	0	0	0.3 ppmv	Mean HSG analytical data. Listed as D001 for cyclohexane in EDF-803 and RPT-12, but HSG analytical results show that this RGN is not warranted.	
480	Unleached Light Non-Special Source Metal - Fe, Cu, Al, Stainless Steel, etc. (MW)	RFP	280, 421, 803-Rev7, RAV	Dichloroethane, 1,2- = (Ethylene dichloride)	17			17	0	0	0.2 ppmv	Mean HSG analytical data.	
480	Unleached Light Non-Special Source Metal - Fe, Cu, Al, Stainless Steel, etc. (MW)	RFP	280, 803-Rev7	Dichloroethene = Dichloroethylene	17			17	0	0	0.2 ppmv	Mean HSG analytical data.	
480	Unleached Light Non-Special Source Metal - Fe, Cu, Al, Stainless Steel, etc. (MW)	RFP	280, 803-Rev7, RAV	Dichloroethane, 1,1- = Dichloroethylene, 1,1-	17			17	0	0	0.4 ppmv	Mean HSG analytical data.	
480	Unleached Light Non-Special Source Metal - Fe, Cu, Al, Stainless Steel, etc. (MW)	RFP	280, 803-Rev7, RAV	Ethyl benzene = Phenylethane	18			18	0	0	0.5 ppmv	Mean HSG analytical data.	
480	Unleached Light Non-Special Source Metal - Fe, Cu, Al, Stainless Steel, etc. (MW)	RFP	280, 369, 413, 421, 803-Rev7, RAV	Freon = 1,1,2-Trichloro-1,2,2-Trifluoroethane	17			17	0	0	1 ppmv	Mean HSG analytical data.	
480	Unleached Light Non-Special Source Metal - Fe, Cu, Al, Stainless Steel, etc. (MW)	RFP	CLM	Furniture	101			101	0	0			
480	Unleached Light Non-Special Source Metal - Fe, Cu, Al, Stainless Steel, etc. (MW)	RFP	CLM	Iron = Fe	23			23	0	0			
480	Unleached Light Non-Special Source Metal - Fe, Cu, Al, Stainless Steel, etc. (MW)	RFP	CLM	Lathe coolant	101			101	0	0		Note for RGN: See CLM (WM-F1-82-021): Any liquid waste, such as gearbox oil and lathe coolant, is drained from all equipment. Oil-Dri used when necessary.	
480	Unleached Light Non-Special Source Metal - Fe, Cu, Al, Stainless Steel, etc. (MW)	RFP	369, 413, 421, 803-Rev7, CLM, RAV	Lead = Pb	23	24		23	0	0	5		
480	Unleached Light Non-Special Source Metal - Fe, Cu, Al, Stainless Steel, etc. (MW)	RFP	803-Rev7	Mercury = Hg	24			24	0	0			
480	Unleached Light Non-Special Source Metal - Fe, Cu, Al, Stainless Steel, etc. (MW)	RFP	CLM	Metal	23			23	0	0			
480	Unleached Light Non-Special Source Metal - Fe, Cu, Al, Stainless Steel, etc. (MW)	RFP	280, 803-Rev7	Methane	28			28	0	0		Note for RGN: See INEL-96/0280 Acceptable Knowledge - This waste has not been characterized as ignitable waste and methane concentrations are assumed to be low (not detected in HSG samples).	
480	Unleached Light Non-Special Source Metal - Fe, Cu, Al, Stainless Steel, etc. (MW)	RFP	280, 803-Rev7, RAV	Methanol = Methyl Alcohol = CH3OH	4			4	0	0	5 ppmv	Mean HSG analytical data.	
480	Unleached Light Non-Special Source Metal - Fe, Cu, Al, Stainless Steel, etc. (MW)	RFP	280, 369, 421, 803-Rev7, RAV	Methylene Chloride = CH2Cl2 = Dichloromethane	17			17	0	0	10 ppmv	Mean HSG analytical data.	
480	Unleached Light Non-Special Source Metal - Fe, Cu, Al, Stainless Steel, etc. (MW)	RFP	CLM	Oil: Gearbox	101			101	0	0		Note for RGN: See CLM (WM-F1-82-021): Any liquid waste, such as gearbox oil and lathe coolant, is drained from all equipment. Oil-Dri used when necessary.	
480	Unleached Light Non-Special Source Metal - Fe, Cu, Al, Stainless Steel, etc. (MW)	RFP	CLM	Oil-Dri	0			0	0	0			
480	Unleached Light Non-Special Source Metal - Fe, Cu, Al, Stainless Steel, etc. (MW)	RFP	280, 803-Rev7	Perclene = Perchloroethylene = Tetrachloroethene, 1,1,2,2-	17			17	0	0	0.3 ppmv	New constituent identified (per EDF-803, Rev 7). Mean HSG analytical data.	
480	Unleached Light Non-Special Source Metal - Fe, Cu, Al, Stainless Steel, etc. (MW)	RFP	803-Rev7	Selenium = Se	22	23	24	24	0	0			
480	Unleached Light Non-Special Source Metal - Fe, Cu, Al, Stainless Steel, etc. (MW)	RFP	803-Rev7	Silver = Ag	24			24	0	0			
480	Unleached Light Non-Special Source Metal - Fe, Cu, Al, Stainless Steel, etc. (MW)	RFP	CLM	Steel	23			23	0	0			

480	Unleached Light Non-Special Source Metal - Fe, Cu, Al, Stainless Steel, etc. (MW)	RFP	280, 803-Rev7, RAV	Toluene = Toluol = Methylbenzene	16			16	0	0	17 ppmv	Mean HSG analytical data.	
480	Unleached Light Non-Special Source Metal - Fe, Cu, Al, Stainless Steel, etc. (MW)	RFP	280, 359, 413, 421, 803-Rev7, RAV	Trichloroethane, 1,1,1- = TCA	17			17	0	0	60 ppmv	Mean HSG analytical data.	
480	Unleached Light Non-Special Source Metal - Fe, Cu, Al, Stainless Steel, etc. (MW)	RFP	280, 421, 803-Rev7, RAV	Trichloroethylene = Trichloroethene = TCE	17			17	0	0	13 ppmv	Mean HSG analytical data.	
480	Unleached Light Non-Special Source Metal - Fe, Cu, Al, Stainless Steel, etc. (MW)	RFP	CLM	Vermiculite	0			0	0	0			
480	Unleached Light Non-Special Source Metal - Fe, Cu, Al, Stainless Steel, etc. (MW)	RFP	CLM	Waste Description: Iron, copper, aluminum, stainless steel, furnaces, stairs, metal racks, tables, hand tools, tanks, piping.	N/A	N/A	N/A	N/A	N/A	N/A			
480	Unleached Light Non-Special Source Metal - Fe, Cu, Al, Stainless Steel, etc. (MW)	RFP	280, 803-Rev7, RAV	Xylene = C6H4(CH3)2 = Dimethyl benzene	16			16	0	0	1 ppmv	Mean HSG analytical data.	
481	Leached Nonspecial Source Metal (MW)	RFP	280, 803-Rev7	Acetone = Dimethyl ketone	19			19	0	0	17 ppmv	New constituent identified (per EDF-803, Rev 7). Mean HSG analytical data.	D006-D009, D011, D028, F001-F003, F005-F007, F008
481	Leached Nonspecial Source Metal (MW)	RFP	CLM	Aluminum = Al	22	23		23	0	0			
481	Leached Nonspecial Source Metal (MW)	RFP	280, 803-Rev7	Benzene	18			18	0	0	0.4 ppmv	New constituent identified (per EDF-803, Rev 7). Mean HSG analytical data.	
481	Leached Nonspecial Source Metal (MW)	RFP	803-Rev7	Cadmium = Cd	23	24		24	0	0			
481	Leached Nonspecial Source Metal (MW)	RFP	280, 803-Rev7	Carbon disulfide = carbon bisulfide	20			20	0	0		New constituent identified (per EDF-803, Rev 7). CS2 concentration expected to be minimal since limited use in laboratories.	
481	Leached Nonspecial Source Metal (MW)	RFP	280, 421, 803-Rev7, RAV	Carbon Tetrachloride = CCl4 = Tetrachloromethane	17			17	0	0	8 ppmv	Mean HSG analytical data.	
481	Leached Nonspecial Source Metal (MW)	RFP	280, RAV	Chloroform = Trichloromethane	17			17	0	0	1 ppmv	Mean HSG analytical data.	
481	Leached Nonspecial Source Metal (MW)	RFP	803-Rev7	Chromium = Cr	23	24		24	0	0			
481	Leached Nonspecial Source Metal (MW)	RFP	CLM	Copper = Cu	23	24		24	0	0			
481	Leached Nonspecial Source Metal (MW)	RFP	280, 803-Rev7	Cyanide cleaning bath solutions	11			11	0	0		Note for RGN: See INEL-96/0280 Acceptable Knowledge - The materials do not contain cyanides or sulfides and are not capable of detonation or explosive reaction.	
481	Leached Nonspecial Source Metal (MW)	RFP	280, 803-Rev7	Cyanide plating bath solutions	11			11	0	0		Note for RGN: See INEL-96/0280 Acceptable Knowledge - The materials do not contain cyanides or sulfides and are not capable of detonation or explosive reaction.	
481	Leached Nonspecial Source Metal (MW)	RFP	280, 803-Rev7	Dichloroethane, 1,2- = (Ethylene dichloride)	17			17	0	0	0.2 ppmv	New constituent identified (per EDF-803, Rev 7). Mean HSG analytical data.	
481	Leached Nonspecial Source Metal (MW)	RFP	280, 413, 803-Rev7, CLM	Freon = 1,1,2-Trichloro-1,2,2-Trifluoroethane	17			17	0	0	1 ppmv	Mean HSG analytical data.	
481	Leached Nonspecial Source Metal (MW)	RFP	CLM	Iron = Fe	23			23	0	0			
481	Leached Nonspecial Source Metal (MW)	RFP	389, 413, 421, 803-Rev7, RAV	Lead = Pb	23	24		23	0	0	5		
481	Leached Nonspecial Source Metal (MW)	RFP	803-Rev7	Mercury = Hg	24			24	0	0		New constituent identified (per EDF-803, Rev 7)	
481	Leached Nonspecial Source Metal (MW)	RFP	280, 803-Rev7	Methanol = Methyl Alcohol = CH3OH	4			4	0	0	5 ppmv	New constituent identified (per EDF-803, Rev 7). Mean HSG analytical data.	
481	Leached Nonspecial Source Metal (MW)	RFP	280, 421, 803-Rev7, RAV	Methylene Chloride = CH2Cl2 = Dichloromethane	17			17	0	0	10 ppmv	Mean HSG analytical data.	
481	Leached Nonspecial Source Metal (MW)	RFP	280, 803-Rev7	Perclene = Perchloroethylene = Tetrachloroethene, 1,1,2,2-	17			17	0	0	0.3 ppmv	New constituent identified (per EDF-803, Rev 7). Mean HSG analytical data.	
481	Leached Nonspecial Source Metal (MW)	RFP	803-Rev7	Silver = Ag	24			24	0	0			
481	Leached Nonspecial Source Metal (MW)	RFP	CLM	Stainless steel	23			23	0	0			
481	Leached Nonspecial Source Metal (MW)	RFP	280, 803-Rev7, RAV	Toluene = Toluol = Methylbenzene	16			16	0	0	17 ppmv	Mean HSG analytical data.	
481	Leached Nonspecial Source Metal (MW)	RFP	280, 421, 803-Rev7, RAV	Trichloroethane, 1,1,1- = TCA	17			17	0	0	60 ppmv	Mean HSG analytical data.	
481	Leached Nonspecial Source Metal (MW)	RFP	280, 803-Rev7, RAV	Trichloroethylene = Trichloroethene = TCE	17			17	0	0	13 ppmv	Mean HSG analytical data.	
481	Leached Nonspecial Source Metal (MW)	RFP	CLM	Vermiculite	0			0	0	0			
481	Leached Nonspecial Source Metal (MW)	RFP	CLM	Waste Description: Iron, copper, aluminum, stainless steel, small handtools, valves, trays, clamps, pipe.	N/A	N/A	N/A	N/A	N/A	N/A			
481	Leached Nonspecial Source Metal (MW)	RFP	280, 803-Rev7	Xylene = C6H4(CH3)2 = Dimethyl benzene	16			16	0	0	1 ppmv	Mean HSG analytical data.	
488	Glovebox Parts with Lead (MW)	RFP	803-Rev7	Lead = Pb	23	24		23	0	0			D008
48A	A mixture of waste characterized with IDC codes 480 and 481 (MW)	RFP	803-Rev7	Arsenic = As	24			24	0	0			D004-D011, D028, F001-F003, F005-F007, F008
48A	A mixture of waste characterized with IDC codes 480 and 481 (MW)	RFP	803-Rev7	Barium = Ba	21	24	107	24	0	0			
48A	A mixture of waste characterized with IDC codes 480 and 481 (MW)	RFP	803-Rev7	Beryllium = Be	24			24	0	0			
48A	A mixture of waste characterized with IDC codes 480 and 481 (MW)	RFP	803-Rev7	Cadmium = Cd	23	24		24	0	0			
48A	A mixture of waste characterized with IDC codes 480 and 481 (MW)	RFP	803-Rev7	Carbon Tetrachloride = CCl4 = Tetrachloromethane	17			17	0	0		Organic solvents assumed to be present in trace amounts based on data for IDCs 480 and 481.	
48A	A mixture of waste characterized with IDC codes 480 and 481 (MW)	RFP	803-Rev7	Chromium = Cr	23	24		24	0	0			
48A	A mixture of waste characterized with IDC codes 480 and 481 (MW)	RFP	280, 803-Rev7	Cyanide	11			11	0	0		Note for RGN: See INEL-96/0280 Acceptable Knowledge - The materials do not contain cyanides or sulfides and are not capable of detonation or explosive reaction.	
48A	A mixture of waste characterized with IDC codes 480 and 481 (MW)	RFP	280, 803-Rev7	Cyanide cleaning bath solutions	11			11	0	0		Note for RGN: See INEL-96/0280 Acceptable Knowledge - The materials do not contain cyanides or sulfides and are not capable of detonation or explosive reaction.	
48A	A mixture of waste characterized with IDC codes 480 and 481 (MW)	RFP	280, 803-Rev7	Cyanide plating bath solutions	11			11	0	0		Note for RGN: See INEL-96/0280 Acceptable Knowledge - The materials do not contain cyanides or sulfides and are not capable of detonation or explosive reaction.	
48A	A mixture of waste characterized with IDC codes 480 and 481 (MW)	RFP	803-Rev7	Cyclohexane	29			29	0	0		Organic solvents assumed to be present in trace amounts based on data for IDCs 480 and 481.	
48A	A mixture of waste characterized with IDC codes 480 and 481 (MW)	RFP	803-Rev7	Dichloroethane, 1,2- = (Ethylene dichloride)	17			17	0	0		Organic solvents assumed to be present in trace amounts based on data for IDCs 480 and 481.	
48A	A mixture of waste characterized with IDC codes 480 and 481 (MW)	RFP	803-Rev7	Dichloroethene = Dichloroethylene	17			17	0	0		Organic solvents assumed to be present in trace amounts based on data for IDCs 480 and 481.	

48A	A mixture of waste characterized with IDC codes 480 and 481 (MW)	RFP	803-Rev7	Dichloroethene, 1,1- = Dichloroethylene, 1,1-	17			17	0	0		Organic solvents assumed to be present in trace amounts based on data for IDCs 480 and 481.	
48A	A mixture of waste characterized with IDC codes 480 and 481 (MW)	RFP	803-Rev7	Ethyl benzene = Phenylethane	18			18	0	0		Organic solvents assumed to be present in trace amounts based on data for IDCs 480 and 481.	
48A	A mixture of waste characterized with IDC codes 480 and 481 (MW)	RFP	803-Rev7	Freon = 1,1,2-Trichloro-1,2,2-Trifluoroethane	17			17	0	0		Organic solvents assumed to be present in trace amounts based on data for IDCs 480 and 481.	
48A	A mixture of waste characterized with IDC codes 480 and 481 (MW)	RFP	803-Rev7	Lead = Pb	23	24		23	0	0			
48A	A mixture of waste characterized with IDC codes 480 and 481 (MW)	RFP	803-Rev7	Mercury = Hg	24			24	0	0			
48A	A mixture of waste characterized with IDC codes 480 and 481 (MW)	RFP	803-Rev7	Methane	29			29	0	0		Based on characterization of IDCs 480 and 481, methane concentrations are assumed to be low (not detected in HSG samples).	
48A	A mixture of waste characterized with IDC codes 480 and 481 (MW)	RFP	803-Rev7	Methylene Chloride = CH2Cl2 = Dichloromethane	17			17	0	0		Organic solvents assumed to be present in trace amounts based on data for IDCs 480 and 481.	
48A	A mixture of waste characterized with IDC codes 480 and 481 (MW)	RFP	803-Rev7	Selenium = Se	22	23	24	24	0	0			
48A	A mixture of waste characterized with IDC codes 480 and 481 (MW)	RFP	803-Rev7	Silver = Ag	24			24	0	0			
48A	A mixture of waste characterized with IDC codes 480 and 481 (MW)	RFP	803-Rev7	Toluene = Toluol = Methylbenzene	18			18	0	0		Organic solvents assumed to be present in trace amounts based on data for IDCs 480 and 481.	
48A	A mixture of waste characterized with IDC codes 480 and 481 (MW)	RFP	803-Rev7	Trichloroethane, 1,1,1- = TCA	17			17	0	0		Organic solvents assumed to be present in trace amounts based on data for IDCs 480 and 481.	
48A	A mixture of waste characterized with IDC codes 480 and 481 (MW)	RFP	803-Rev7	Trichloroethylene = Trichloroethene = TCE	17			17	0	0		Organic solvents assumed to be present in trace amounts based on data for IDCs 480 and 481.	
48A	A mixture of waste characterized with IDC codes 480 and 481 (MW)	RFP	803-Rev7	Xylene = C6H4(CH3)2 = Dimethyl benzene	18			18	0	0		Organic solvents assumed to be present in trace amounts based on data for IDCs 480 and 481.	
480	Chemical Warfare Service Filters (MW)	RFP	CLM	Aluminum = Al	22	23		23	0	0			D001, D005, D007-D009, D011, D022, F001, F002, F005-F007, F009 (RPT-12 lists D001 in Table 5 but not in Table 4)
480	Chemical Warfare Service Filters (MW)	RFP	803-Rev7, RAV	Asbestos	0			0	0	0	25		
480	Chemical Warfare Service Filters (MW)	RFP	803-Rev7	Barium = Ba	21	24	107	24	0	0			
480	Chemical Warfare Service Filters (MW)	RFP	280, 803-Rev7	Benzene	18			18	0	0	1 ppmv	New constituent identified (per EDF-803, Rev 7). Mean HSG analytical data.	
490	Chemical Warfare Service Filters (MW)	RFP	280, 369, 413, 421, 803-Rev7, RAV	Carbon Tetrachloride = CCl4 = Tetrachloromethane	17			17	0	0	100 ppmv	Mean HSG analytical data.	
480	Chemical Warfare Service Filters (MW)	RFP	280, 803-Rev7	Chloroform = Trichloromethane	17			17	0	0	0.9 ppmv	New constituent identified (per EDF-803, Rev 7). Mean HSG analytical data.	
480	Chemical Warfare Service Filters (MW)	RFP	803-Rev7	Chromium = Cr	23	24		24	0	0			
480	Chemical Warfare Service Filters (MW)	RFP	280, 803-Rev7	Cyanide cleaning bath solutions	11			11	0	0		Note for RGN: See INEL-96/0280 Acceptable Knowledge - Materials contain only trace quantities of CN and are not reactive.	
480	Chemical Warfare Service Filters (MW)	RFP	280, 803-Rev7	Cyanide plating bath solutions	11			11	0	0		Note for RGN: See INEL-96/0280 Acceptable Knowledge - Materials contain only trace quantities of CN and are not reactive.	
480	Chemical Warfare Service Filters (MW)	RFP	280, 369, 413, 421, 803-Rev7, RAV	Freon = 1,1,2-Trichloro-1,2,2-Trifluoroethane	17			17	0	0	80 ppmv	Mean HSG analytical data.	
480	Chemical Warfare Service Filters (MW)	RFP	803-Rev7	Lead = Pb	23	24		23	0	0			
480	Chemical Warfare Service Filters (MW)	RFP	803-Rev7	Mercury = Hg	24			24	0	0		New constituent identified (per EDF-803, Rev 7).	
480	Chemical Warfare Service Filters (MW)	RFP	280, 369, 413, 421, 803-Rev7, RAV	Methylene Chloride = CH2Cl2 = Dichloromethane	17			17	0	0	11 ppmv	Mean HSG analytical data.	
490	Chemical Warfare Service Filters (MW)	RFP	12, 280, 369, 413, 803-Rev7	Nitrates	104			104	0	0		Note for RGN: Possibility of spontaneous combustion due to nitrate salts no longer applies. (See Acceptable Knowledge Document for INEEL Stored Transuranic Waste--Rocky Flats Plant Waste, Revision 3, INEL-96-0280, February 2003.) (However, EDF-803 and RPT-12 still list this as D001 ignitable waste due to nitrates.)	
480	Chemical Warfare Service Filters (MW)	RFP	12, 280, 803-Rev7, CLM	Nitric Acid = HNO3	2			2	0	0		Not listed as D002 corrosive in INEL-96/0280, EDF-803, or RPT-12.	
480	Chemical Warfare Service Filters (MW)	RFP	CLM	Oil-Dri	0			0	0	0			
480	Chemical Warfare Service Filters (MW)	RFP	280, 803-Rev7	Perclene = Perchloroethylene = Tetrachloroethene, 1,1,2,2-	17			17	0	0	0.1 ppmv	Mean HSG analytical data.	
480	Chemical Warfare Service Filters (MW)	RFP	CLM	Portland Cement	0			0	0	0			
480	Chemical Warfare Service Filters (MW)	RFP	803-Rev7	Silver = Ag	24			24	0	0			
480	Chemical Warfare Service Filters (MW)	RFP	280, 803-Rev7	Toluene = Toluol = Methylbenzene	18			18	0	0	20 ppmv	Mean HSG analytical data.	
480	Chemical Warfare Service Filters (MW)	RFP	280, 369, 413, 421, 803-Rev7, RAV	Trichloroethane, 1,1,1- = TCA	17			17	0	0	41 ppmv	Mean HSG analytical data.	
490	Chemical Warfare Service Filters (MW)	RFP	280, 803-Rev7	Trichloroethylene = Trichloroethene = TCE	17			17	0	0	4 ppmv	Mean HSG analytical data.	
490	Chemical Warfare Service Filters (MW)	RFP	CLM	Waste Description: HEPA filters, prefilters, Chemical Warfare Service filters.	N/A	N/A	N/A	N/A	N/A	N/A			
490	Chemical Warfare Service Filters (MW)	RFP	280, CLM	Wood	101			101	0	0		Note for RGN: Possibility of spontaneous combustion due to nitrate salts no longer applies. (See Acceptable Knowledge Document for INEEL Stored Transuranic Waste--Rocky Flats Plant Waste, Revision 3, INEL-96-0280, February 2003.)	
490	Chemical Warfare Service Filters (MW)	RFP	280, 803-Rev7	Xylene = C6H4(CH3)2 = Dimethyl benzene	18			18	0	0	0.7 ppmv	Mean HSG analytical data.	
491	Plenum Prefilters (MW)	RFP	280, 803-Rev7	Carbon Tetrachloride = CCl4 = Tetrachloromethane	17			17	0	0		INEL-96/0280 states that plenum prefilters were handled as IDC 490 HEPA/CWS filter waste until the mid-1980s when prefilters were segregated into IDC 491. Organic solvent and nitrate data for IDC 480 should apply to this waste, and no incompatible RGNs are warranted	F001, F002
491	Plenum Prefilters (MW)	RFP	803-Rev7	Freon = 1,1,2-Trichloro-1,2,2-Trifluoroethane	17			17	0	0			
491	Plenum Prefilters (MW)	RFP	803-Rev7	Methylene Chloride = CH2Cl2 = Dichloromethane	17			17	0	0			

491	Plenum Prefilters (MW)	RFP	803-Rev7	Trichloroethane, 1,1,1- = TCA	17			17	0	0			
515	Plastics, Paper, Cloth, etc. (ROW)	Babcock	803-Rev7	None identified	None	None	None	None	None	None		ROW assumed to have no RGNs.	None (EDF-803)
516	Steel, Al, Electrical Devices-Handheld (ROW)	Babcock	803-Rev7	None identified	None	None	None	None	None	None		ROW assumed to have no RGNs.	None (EDF-803)
517	Heavy Metals, Steel, Al, Brass (ROW)	Babcock	803-Rev7	None identified	None	None	None	None	None	None		ROW assumed to have no RGNs.	None (EDF-803)
530	Compacted Waste (ROW)	Monsanto	803-Rev7	None identified	None	None	None	None	None	None		ROW assumed to have no RGNs.	None (EDF-803)
535	Compacted Waste/Lead (ROW)	Monsanto	803-Rev7	None identified	None	None	None	None	None	None		ROW assumed to have no RGNs.	None (EDF-803)
540	Noncompacted Waste (ROW)	Monsanto	803-Rev7	None identified	None	None	None	None	None	None		ROW assumed to have no RGNs.	None (EDF-803)
545	WEP Shielded Waste (ROW)	Monsanto	803-Rev7	None identified	None	None	None	None	None	None		ROW assumed to have no RGNs.	None (EDF-803)
550	Solidified Oil (ROW)	Monsanto	803-Rev7	None identified	None	None	None	None	None	None		ROW assumed to have no RGNs.	None (EDF-803)
601	Alpha Low Level Lav. WPP Analytical Waste (MW)	INEEL	803-Rev7	Arsenic = As	24			24	0	0			D004-D011, F001-F003, F005-F007, F009 (EDF-803)
601	Alpha Low Level Lav. WPP Analytical Waste (MW)	INEEL	803-Rev7	Barium = Ba	21	24	107	24	0	0			
601	Alpha Low Level Lav. WPP Analytical Waste (MW)	INEEL	803-Rev7	Cadmium = Cd	23	24		24	0	0			
601	Alpha Low Level Lav. WPP Analytical Waste (MW)	INEEL	803-Rev7	Carbon Tetrachloride = CCl4 = Tetrachloromethane	17			17	0	0		Analytical laboratory waste assumed to have only trace amounts of organic solvents, CN, and nitrates, consistent with the type of RFP wastes undergoing sampling & analysis.	
601	Alpha Low Level Lav. WPP Analytical Waste (MW)	INEEL	803-Rev7	Chromium = Cr	23	24		24	0	0			
601	Alpha Low Level Lav. WPP Analytical Waste (MW)	INEEL	803-Rev7	Cyanide cleaning bath solutions	11			11	0	0			
601	Alpha Low Level Lav. WPP Analytical Waste (MW)	INEEL	803-Rev7	Cyanide plating bath solutions	11			11	0	0			
601	Alpha Low Level Lav. WPP Analytical Waste (MW)	INEEL	803-Rev7	Ethyl ether = Diethyl ether	14			14	0	0			
601	Alpha Low Level Lav. WPP Analytical Waste (MW)	INEEL	803-Rev7	Freon = 1,1,2-Trichloro-1,2,2-Trifluoroethane	17			17	0	0			
601	Alpha Low Level Lav. WPP Analytical Waste (MW)	INEEL	803-Rev7	Lead = Pb	23	24		24	0	0			
601	Alpha Low Level Lav. WPP Analytical Waste (MW)	INEEL	803-Rev7	Mercury = Hg	24			24	0	0			
601	Alpha Low Level Lav. WPP Analytical Waste (MW)	INEEL	803-Rev7	Selenium = Se	22	23	24	24	0	0			
601	Alpha Low Level Lav. WPP Analytical Waste (MW)	INEEL	803-Rev7	Silver = Ag	24			24	0	0			
601	Alpha Low Level Lav. WPP Analytical Waste (MW)	INEEL	803-Rev7	Toluene = Toluol = Methylbenzene	18			18	0	0			
700	Organic and Sludge Immobilization System (OASIS) Waste (MW)	RFP	280, 421, 803-Rev7, RAV	Carbon Tetrachloride = CCl4 = Tetrachloromethane	17			17	0	N/A	4.4	Mean sludge solids analytical data.	D022, F001-F003
700	Organic and Sludge Immobilization System (OASIS) Waste (MW)	RFP	280, 803-Rev7, RAV	Chloroform = Trichloromethane	17			17	0	0	0.01	Mean sludge solids analytical data.	
700	Organic and Sludge Immobilization System (OASIS) Waste (MW)	RFP	280, 421, 803-Rev7, RAV	Freon = 1,1,2-Trichloro-1,2,2-Trifluoroethane	17			17	0	N/A	4,400 ppmw	Mean sludge HSG analytical data.	
700	Organic and Sludge Immobilization System (OASIS) Waste (MW)	RFP	280, 421, 803-Rev7, RAV	Trichloroethane, 1,1,1- = TCA	17			17	0	N/A	9,600 ppmw	Mean sludge HSG analytical data.	
700	Organic and Sludge Immobilization System (OASIS) Waste (MW)	RFP	280, 803-Rev7	Trichloroethylene = Trichloroethene = TCE	17			17	0	0	5.00E-04	Mean sludge solids analytical data.	
700	Organic and Sludge Immobilization System (OASIS) Waste (MW)	RFP	280, 803-Rev7, RAV	Xylene = C6H4(CH3)2 = Dimethyl benzene	16			16	0	0	3 ppmw	Mean sludge HSG analytical data.	
800	Solidified Sludge, Bldg. 774 (MW)	RFP	280, 803-Rev7	Arsenic = As	24			24	0	0	0.01	INEL-96/0280 states that this waste is identical to IDC 001 except for the immobilization process. Beginning in 1995, the sludge was co-fed into a drum with a diatomite/portland cement mixture and assigned to IDC 800. Therefore, metal, organic solvent, corrosive, and CN concentrations are assumed to be similar to IDC 001, with no RGN compatibility concerns. EDF-803 still lists this waste as D002 corrosive. Mean sludge solids analytical data for IDCs 001/002.	D004-D011, D022, F001, F002, F005-F007, F009
800	Solidified Sludge, Bldg. 774 (MW)	RFP	280, 803-Rev7	Barium = Ba	21	24	107	24	0	0	0.004	Mean sludge solids analytical data for IDCs 001/002.	
800	Solidified Sludge, Bldg. 774 (MW)	RFP	280, 803-Rev7	Benzene	18			18	0	0	2 ppmw	Mean sludge HSG analytical data for IDCs 001/002.	
800	Solidified Sludge, Bldg. 774 (MW)	RFP	803-Rev7	Beryllium = Be	24			24	0	0			
800	Solidified Sludge, Bldg. 774 (MW)	RFP	280, 803-Rev7	Butanol = Butyl Alcohol = C4H9OH	4			4	0	0	2 ppmw	Mean sludge HSG analytical data for IDCs 001/002.	
800	Solidified Sludge, Bldg. 774 (MW)	RFP	280, 803-Rev7	Cadmium = Cd	23	24		24	0	0	0.001	Mean sludge solids analytical data for IDCs 001/002	
800	Solidified Sludge, Bldg. 774 (MW)	RFP	280, 803-Rev7	Carbon Tetrachloride = CCl4 = Tetrachloromethane	17			17	0	0	7.00E-05	Mean sludge solids analytical data for IDCs 001/002.	
800	Solidified Sludge, Bldg. 774 (MW)	RFP	280, 803-Rev7	Chlorobenzene	17			17	0	0	5.00E-05	Mean sludge solids analytical data for IDCs 001/002.	
800	Solidified Sludge, Bldg. 774 (MW)	RFP	280, 803-Rev7	Chloroform = Trichloromethane	17			17	0	0	5.00E-05	New constituent identified (per EDF-803, Rev 7). Mean sludge solids analytical data for IDCs 001/002.	
800	Solidified Sludge, Bldg. 774 (MW)	RFP	280, 803-Rev7	Chromium = Cr	23	24		24	0	0	0.02	Mean sludge solids analytical data for IDCs 001/002.	
800	Solidified Sludge, Bldg. 774 (MW)	RFP	12, 280, 803-Rev7	Corrosive	10			10	0	0		Free liquid pH = 8 to 12, and does not qualify as corrosive in INEL-96/0280 or RPT-12 (although still listed as D002 in EDF-803).	
800	Solidified Sludge, Bldg. 774 (MW)	RFP	280, 803-Rev7	Cyanide cleaning bath solutions	11			11	0	0		Note for RGN: See INEL-96/0280 Acceptable Knowledge - The cyanide concentrations should be relatively low and should not cause the waste to be reactive.	
800	Solidified Sludge, Bldg. 774 (MW)	RFP	280, 803-Rev7	Cyanide plating bath solutions	11			11	0	0		Note for RGN: See INEL-96/0280 Acceptable Knowledge - The cyanide concentrations should be relatively low and should not cause the waste to be reactive.	
800	Solidified Sludge, Bldg. 774 (MW)	RFP	280, 803-Rev7	Dichloroethene, 1,1- = Dichloroethylene, 1,1-	17			17	0	0	6.00E-05	Mean sludge solids analytical data for IDCs 001/002.	

800	Solidified Sludge, Bldg. 774 (MW)	RFP	280, 803-Rev7	Ethyl benzene = Phenylethane	16			16	0	0	1 ppmv	Mean sludge HSG analytical data for IDCs 001/002.	
800	Solidified Sludge, Bldg. 774 (MW)	RFP	280, 803-Rev7	Freon = 1,1,2-Trichloro-1,2,2-Trifluoroethane	17			17	0	0	53 ppmv	Mean sludge HSG analytical data for IDCs 001/002.	
800	Solidified Sludge, Bldg. 774 (MW)	RFP	280, 803-Rev7	Lead = Pb	23	24		24	0	0	0.02	Mean sludge solids analytical data for IDCs 001/002.	
800	Solidified Sludge, Bldg. 774 (MW)	RFP	280, 803-Rev7	Mercury = Hg	24			24	0	0	1.00E-04	Mean sludge solids analytical data for IDCs 001/002.	
800	Solidified Sludge, Bldg. 774 (MW)	RFP	280, 803-Rev7	Methanol = Methyl Alcohol = CH3OH	4			4	0	0	8 ppmv	Mean sludge HSG analytical data for IDCs 001/002.	
800	Solidified Sludge, Bldg. 774 (MW)	RFP	280, 803-Rev7	Methylene Chloride = CH2Cl2 = Dichloromethane	17			17	0	0	2 ppmv	Mean sludge HSG analytical data for IDCs 001/002.	
800	Solidified Sludge, Bldg. 774 (MW)	RFP	280, 803-Rev7	Perclene = Perchloroethylene = Tetrachloroethene, 1,1,2,2-	17			17	0	0	6.00E-05	New constituent identified (per EDF-803, Rev 7). Mean sludge solids analytical data for IDCs 001/002.	
800	Solidified Sludge, Bldg. 774 (MW)	RFP	280, 803-Rev7	Selenium = Se	22	23	24	24	0	0	3.00E-05	Mean sludge solids analytical data for IDCs 001/002.	
800	Solidified Sludge, Bldg. 774 (MW)	RFP	280, 803-Rev7	Silver = Ag	24			24	0	0	0.01	Mean sludge solids analytical data for IDCs 001/002.	
800	Solidified Sludge, Bldg. 774 (MW)	RFP	280, 803-Rev7	Toluene = Toluol = Methylbenzene	16			16	0	0	9 ppmv	Mean sludge HSG analytical data for IDCs 001/002.	
800	Solidified Sludge, Bldg. 774 (MW)	RFP	280, 803-Rev7	Trichloroethane, 1,1,1- = TCA	17			17	0	0	87 ppmv	Mean sludge HSG analytical data for IDCs 001/002.	
800	Solidified Sludge, Bldg. 774 (MW)	RFP	803-Rev7	Trichloroethane, 1,1,2-	17			17	0	0		Assumed to be low based on trace quantities of the more commonly used solvents in IDCs 001/002.	
800	Solidified Sludge, Bldg. 774 (MW)	RFP	280, 803-Rev7	Trichloroethylene = Trichloroethene = TCE	17			17	0	0	4.00E-04	Mean sludge solids analytical data for IDCs 001/002.	
800	Solidified Sludge, Bldg. 774 (MW)	RFP	280, 803-Rev7	Xylene = C6H4(CH3)2 = Dimethyl benzene	16			16	0	0	3 ppmv	Mean sludge HSG analytical data for IDCs 001/002.	
801	Rags, Paper, Wood, etc. (ROW)	Mound	413, 803-Rev7	Waste Description: Cloth rags, terrytex, wood, cardboard tubes. Some gloves, plastic.	None	None	None	None	None	None		ROW assumed to have no RGMs.	None
801	Solidified Organics (MW)	RFP	280, 803-Rev7	Carbon Tetrachloride = CCl4 = Tetrachloromethane	17			17	0	N/A	4.4	Mean sludge solids analytical data.	D022, F001-F003
801	Solidified Organics (MW)	RFP	280, 803-Rev7	Chloroform = Trichloromethane	17			17	0	0	0.01	Mean sludge solids analytical data.	
801	Solidified Organics (MW)	RFP	280, 803-Rev7	Freon = 1,1,2-Trichloro-1,2,2-Trifluoroethane	17			17	0	N/A	4,400 ppmv	Mean sludge HSG analytical data.	
801	Solidified Organics (MW)	RFP	280, 803-Rev7	Methanol = Methyl Alcohol = CH3OH	4			4	0	0	110 ppmv	Mean sludge HSG analytical data.	
801	Solidified Organics (MW)	RFP	280, 803-Rev7	Methylene Chloride = CH2Cl2 = Dichloromethane	17			17	0	0	31 ppmv	Mean sludge HSG analytical data.	
801	Solidified Organics (MW)	RFP	280, 803-Rev7	Perclene = Perchloroethylene = Tetrachloroethene, 1,1,2,2-	17			17	0	0	2 ppmv	Mean sludge HSG analytical data.	
801	Solidified Organics (MW)	RFP	280, 803-Rev7	Toluene = Toluol = Methylbenzene	16			16	0	0	2 ppmv	Mean sludge HSG analytical data.	
801	Solidified Organics (MW)	RFP	280, 803-Rev7	Trichloroethane, 1,1,1- = TCA	17			17	0	N/A	8,800 ppmv	Mean sludge HSG analytical data.	
801	Solidified Organics (MW)	RFP	280, 803-Rev7	Trichloroethylene = Trichloroethene = TCE	17			17	0	0	3 ppmv	Mean sludge HSG analytical data.	
802	Dry-Box Gloves and O-Rings (MW)	Mound	369, 413, 421, 803-Rev7, CLM, RAV	Lead = Pb	23	24		23	0	0		Characteristic, EP Toxic	D008
802	Dry-Box Gloves and O-Rings (MW)	Mound	CLM	Neoprene	101			101	0	0			
802	Dry-Box Gloves and O-Rings (MW)	Mound	12, 413, 803-Rev7	Nitrates	104			104	0	0		Note for RGN: IDC 812 Spent Ion Exchange Resin nitrates were packed in a combustible waste drum. Any reaction would have taken place. Not listed as D001 for nitrates in EDF-803 or RPT-12.	
802	Dry-Box Gloves and O-Rings (MW)	Mound	12, 803-Rev7, CLM	Nitric Acid = HNO3	2			2	0	0		Note for RGN: See NOD Response to EPA ID#890008952 - Casual or incidental nitration of cellulose is unlikely. Oxidation of organics (rather than nitration), more likely. Not listed as D002 corrosive in EDF-803 or RPT-12.	
802	Dry-Box Gloves and O-Rings (MW)	Mound	CLM	Waste Description: Neoprene dry box gloves, neoprene O-rings, lead-lined glovebox gloves. Waste was dry when packaged	N/A	N/A	N/A	N/A	N/A	N/A			
802	Solidified Lab Waste (MW)	RFP	280, 803-Rev7	Carbon Tetrachloride = CCl4 = Tetrachloromethane	17			17	0	0	8.00E-04	Note for RGN: Similar to IDC 004. Mean solids analytical data.	D001, D006, D008, D011, F001-F003, F005
802	Solidified Lab Waste (MW)	RFP	12, 280, 803-Rev7	Cyclohexane	28			29	0	0	29 ppmv	Note for RGN: Similar to IDC 004. Mean HSG analytical data. Listed as D001 for cyclohexane in EDF-803 and RPT-12, but HSG analytical results show that this RGN is not warranted.	
802	Solidified Lab Waste (MW)	RFP	803-Rev7	Ethoxyethanol, 2-	4	14		4	0	0		Note for RGN: Similar to IDC 004.	
802	Solidified Lab Waste (MW)	RFP	280, 803-Rev7	Ethyl benzene = Phenylethane	16			16	0	0	0.3 ppmv	Note for RGN: Similar to IDC 004. Mean HSG analytical data.	
802	Solidified Lab Waste (MW)	RFP	280, 803-Rev7	Methanol = Methyl Alcohol = CH3OH	4			4	0	0	3,400 ppmv	Note for RGN: Similar to IDC 004. Mean HSG analytical data.	
802	Solidified Lab Waste (MW)	RFP	803-Rev7	Silver = Ag	24			24	0	0			
802	Solidified Lab Waste (MW)	RFP	280, 803-Rev7	Toluene = Toluol = Methylbenzene	16			16	0	0	3 ppmv	Note for RGN: Similar to IDC 004. Mean HSG analytical data.	
802	Solidified Lab Waste (MW)	RFP	280, 803-Rev7	Trichloroethane, 1,1,1- = TCA	17			17	0	0	56 ppmv	Note for RGN: Similar to IDC 004. Mean HSG analytical data.	
802	Solidified Lab Waste (MW)	RFP	280, 803-Rev7	Trichloroethylene = Trichloroethene = TCE	17			17	0	0	5.00E-05	Note for RGN: Similar to IDC 004. Mean solids analytical data.	
802	Solidified Lab Waste (MW)	RFP	280, 803-Rev7	Xylene = C6H4(CH3)2 = Dimethyl benzene	16			16	0	0	0.9 ppmv	Note for RGN: Similar to IDC 004. Mean HSG analytical data.	
803	Metal, Equipment, Pipes, Valves, etc. (MW)	Mound	CLM	Aluminum metal waste	22	23		23	0	0			D008
803	Metal, Equipment, Pipes, Valves, etc. (MW)	Mound	CLM	Carbon steel pipe	23			23	0	0			

803	Metal, Equipment, Pipes, Valves, etc. (MW)	Mound	421, 803-Rev7, RAV	Mercury = Hg	24			24	0	0	0.3	Characteristic: EP Toxic	
803	Metal, Equipment, Pipes, Valves, etc. (MW)	Mound	12, 413, 803-Rev7	Nitrates	104			104	0	0		Note for RGN: IDC 612 Spent Ion Exchange Resin nitrates were packed in a combustible waste drum. Any reaction would have taken place. Not listed as D001 for nitrates in EDF-803 or RPT-12.	
803	Metal, Equipment, Pipes, Valves, etc. (MW)	Mound	12, 369, 803-Rev7, CLM	Nitric Acid = HNO3	2			2	0	0		Not listed as D002 corrosive in EDF-803 or RPT-12.	
803	Metal, Equipment, Pipes, Valves, etc. (MW)	Mound	CLM	Stainless steel	23			23	0	0			
803	Metal, Equipment, Pipes, Valves, etc. (MW)	Mound	CLM	Waste Description: Primarily stainless steel, carbon steel, and small amounts of aluminum metal wastes	N/A	N/A	N/A	N/A	N/A	N/A			
803	Solidified DCP Sludge (MW)	RFP	280, 803-Rev7	Arsenic = As	24			24	0	0	4.00E-04	Mean sludge solids analytical data.	D008-D011, D032, F001, F002, F005-F007, F009
803	Solidified DCP Sludge (MW)	RFP	280, 803-Rev7	Barium = Ba	21	24	107	24	0	0	0.005	Mean sludge solids analytical data.	
803	Solidified DCP Sludge (MW)	RFP	280, 803-Rev7	Benzene	16			16	0	0	5.00E-05	New constituent identified (per EDF-803, Rev 7). Mean sludge solids analytical data.	
803	Solidified DCP Sludge (MW)	RFP	803-Rev7	Beryllium = Be	24			24	0	0			
803	Solidified DCP Sludge (MW)	RFP	280, 803-Rev7	Butanol = Butyl Alcohol = C4H9OH	4			4	0	0	0.7 ppmv	Mean sludge HSG analytical data.	
803	Solidified DCP Sludge (MW)	RFP	280, 803-Rev7	Cadmium = Cd	23	24		24	0	0	7.00E-04	Mean sludge solids analytical data.	
803	Solidified DCP Sludge (MW)	RFP	280, 803-Rev7	Carbon Tetrachloride = CCl4 = Tetrachloromethane	17			17	0	0	5.00E-05	Mean sludge solids analytical data.	
803	Solidified DCP Sludge (MW)	RFP	280, 803-Rev7	Chromium = Cr	23	24		24	0	0	0.03	Mean sludge solids analytical data.	
803	Solidified DCP Sludge (MW)	RFP	280, 803-Rev7	Cyanide cleaning bath solutions	11			11	0	0		Note for RGN: See INEL-96/0280 Acceptable Knowledge - Analysis of bypass sludge indicates a maximum total cyanide concentration 8.2 mg/kg, and a maximum reactive cyanide concentration of 5.36 mg/kg. These cyanide levels will not cause the waste to be reactive.	
803	Solidified DCP Sludge (MW)	RFP	280, 803-Rev7	Cyanide plating bath solutions	11			11	0	0		Note for RGN: See INEL-96/0280 Acceptable Knowledge - Analysis of bypass sludge indicates a maximum total cyanide concentration 8.2 mg/kg, and a maximum reactive cyanide concentration of 5.36 mg/kg. These cyanide levels will not cause the waste to be reactive.	
803	Solidified DCP Sludge (MW)	RFP	280, 803-Rev7	Ethyl benzene = Phenylethane	16			16	0	0	0.3 ppmv	Mean sludge HSG analytical data.	
803	Solidified DCP Sludge (MW)	RFP	280, 803-Rev7	Freon = 1,1,2-Trichloro-1,2,2-Trifluoroethane	17			17	0	0	9 ppmv	Mean sludge HSG analytical data.	
803	Solidified DCP Sludge (MW)	RFP	280, 803-Rev7	Hexachlorobenzene	17			17	0	0	1.00E-05	New constituent identified (per EDF-803, Rev 7). Mean sludge solids analytical data.	
803	Solidified DCP Sludge (MW)	RFP	280, 803-Rev7	Lead = Pb	23	24		24	0	0	0.004	Mean sludge solids analytical data.	
803	Solidified DCP Sludge (MW)	RFP	280, 803-Rev7	Mercury = Hg	24			24	0	0	9.00E-04	Mean sludge solids analytical data.	
803	Solidified DCP Sludge (MW)	RFP	280, 803-Rev7	Methanol = Methyl Alcohol = CH3OH	4			4	0	0	6 ppmv	Mean sludge HSG analytical data.	
803	Solidified DCP Sludge (MW)	RFP	280, 803-Rev7	Methylene Chloride = CH2Cl2 = Dichloromethane	17			17	0	0	5 ppmv	Mean sludge HSG analytical data.	
803	Solidified DCP Sludge (MW)	RFP	280, 803-Rev7	Methyl ethyl ketone = Butanone	19			19	0	0	9.00E-05	New constituent identified (per EDF-803, Rev 7). Mean sludge solids analytical data.	
803	Solidified DCP Sludge (MW)	RFP	280, 803-Rev7	Perclene = Perchloroethylene = Tetrachloroethene, 1,1,2,2-	17			17	0	0	5.00E-05	New constituent identified (per EDF-803, Rev 7). Mean sludge solids analytical data.	
803	Solidified DCP Sludge (MW)	RFP	280, 803-Rev7	Selenium = Se	22	23	24	24	0	0	1.00E-04	Mean sludge solids analytical data.	
803	Solidified DCP Sludge (MW)	RFP	280, 803-Rev7	Silver = Ag	24			24	0	0	0.008	Mean sludge solids analytical data.	
803	Solidified DCP Sludge (MW)	RFP	280, 803-Rev7	Tetrachloroethene, 1,1,2,2-	17			17	0	0	0.1 ppmv	Mean sludge HSG analytical data.	
803	Solidified DCP Sludge (MW)	RFP	280, 803-Rev7	Toluene = Toluol = Methylbenzene	16			16	0	0	9 ppmv	Mean sludge HSG analytical data.	
803	Solidified DCP Sludge (MW)	RFP	280, 803-Rev7	Trichloroethane, 1,1,1- = TCA	17			17	0	0	60 ppmv	Mean sludge HSG analytical data.	
803	Solidified DCP Sludge (MW)	RFP	280, 803-Rev7	Trichloroethylene = Trichloroethene = TCE	17			17	0	0	7.00E-05	New constituent identified (per EDF-803, Rev 7). Mean sludge solids analytical data.	
803	Solidified DCP Sludge (MW)	RFP	280, 803-Rev7	Xylene = C6H4(CH3)2 = Dimethyl benzene	16			16	0	0	1 ppmv	Mean sludge HSG analytical data.	
804	Plastic, Tygon, Manipulator Boots, etc. (MW)	Mound	803-Rev7	Mercury = Hg	24			24	0	0			D009
804	Plastic, Tygon, Manipulator Boots, etc. (MW)	Mound	CLM	Nitric Acid = HNO3	2			2	0	0		Per CLM: Plastics were leached and ultrasonically cleaned and dried prior to packaging.	
804	Plastic, Tygon, Manipulator Boots, etc. (MW)	Mound	CLM	Plastic	101			101	0	0			
804	Plastic, Tygon, Manipulator Boots, etc. (MW)	Mound	CLM	Waste Description: Plastics (PVC, polyethylene, Tygon, etc.) in the form of tubing, piping, sample vials, gaskets, etc.	N/A	N/A	N/A	N/A	N/A	N/A			
805	Asbestos Filters (MW)	Mound	803-Rev7, RAV	Asbestos	0			0	0	0	25		D001, D002, D009
805	Asbestos Filters (MW)	Mound	CLM	Filters	0			0	0	0			
805	Asbestos Filters (MW)	Mound	421, 803-Rev7, RAV	Mercury = Hg	24			24	0	0		Characteristic: EP Toxic	
805	Asbestos Filters (MW)	Mound	12, 369, 413, 421, 803-Rev7	Nitrates	104			104	104	104		Listed as D001 for nitrates in EDF-803 and RPT-12.	
805	Asbestos Filters (MW)	Mound	12, 369, 803-Rev7, CLM	Nitric Acid = HNO3	2			2	2	2		Listed as D002 corrosive in EDF-803 and RPT-12.	

805	Asbestos Filters (MW)	Mound	CLM	Waste Description: 6"x6" and 6"x3" HEPA filters, hardboard frames, metal frames, asbestos filter media.	N/A	N/A	N/A	N/A	N/A	N/A			
808	Solidified Process Solids (MW)	RFP	803-Rev7	Arsenic = As	24			24	0	0			D004-D011, F001-F003, F005
808	Solidified Process Solids (MW)	RFP	803-Rev7	Barium = Ba	21	24	107	24	0	0			
808	Solidified Process Solids (MW)	RFP	280, 803-Rev7	Butanol = Butyl Alcohol = C4H9OH	4			4	0	0		Note for RGN: See INEL-96/0280 Acceptable Knowledge - Based on the types of wastes that were solidified under this IDC, it is assumed that only trace quantities of organic solvents are present and organic RGNs are not warranted.	
808	Solidified Process Solids (MW)	RFP	803-Rev7	Cadmium = Cd	23	24		24	0	0			
808	Solidified Process Solids (MW)	RFP	280, 803-Rev7	Carbon Tetrachloride = CCl4 = Tetrachloromethane	17			17	0	0		Note for RGN: See INEL-96/0280 Acceptable Knowledge - Based on the types of wastes that were solidified under this IDC, it is assumed that only trace quantities of organic solvents are present and organic RGNs are not warranted.	
808	Solidified Process Solids (MW)	RFP	803-Rev7	Chromium = Cr	23	24		24	0	0			
808	Solidified Process Solids (MW)	RFP	280, 803-Rev7	Freon = 1,1,2-Trichloro-1,2,2-Trifluorethane	17			17	0	0		Note for RGN: See INEL-96/0280 Acceptable Knowledge - Based on the types of wastes that were solidified under this IDC, it is assumed that only trace quantities of organic solvents are present and organic RGNs are not warranted.	
808	Solidified Process Solids (MW)	RFP	803-Rev7	Lead = Pb	23	24		24	0	0			
808	Solidified Process Solids (MW)	RFP	803-Rev7	Mercury = Hg	24			24	0	0			
808	Solidified Process Solids (MW)	RFP	280, 803-Rev7	Methanol = Methyl Alcohol = CH3OH	4			4	0	0		Note for RGN: See INEL-96/0280 Acceptable Knowledge - Based on the types of wastes that were solidified under this IDC, it is assumed that only trace quantities of organic solvents are present and organic RGNs are not warranted.	
808	Solidified Process Solids (MW)	RFP	280, 803-Rev7	Methyl ethyl ketone = Butanone	18			18	0	0		Note for RGN: See INEL-96/0280 Acceptable Knowledge - Based on the types of wastes that were solidified under this IDC, it is assumed that only trace quantities of organic solvents are present and organic RGNs are not warranted.	
808	Solidified Process Solids (MW)	RFP	280, 803-Rev7	Methylene Chloride = CH2Cl2 = Dichloromethane	17			17	0	0		Note for RGN: See INEL-96/0280 Acceptable Knowledge - Based on the types of wastes that were solidified under this IDC, it is assumed that only trace quantities of organic solvents are present and organic RGNs are not warranted.	
808	Solidified Process Solids (MW)	RFP	803-Rev7	Selenium = Se	22	23	24	24	0	0			
808	Solidified Process Solids (MW)	RFP	803-Rev7	Silver = Ag	24			24	0	0			
808	Solidified Process Solids (MW)	RFP	280, 803-Rev7	Toluene = Toluol = Methylbenzene	18			18	0	0		Note for RGN: See INEL-96/0280 Acceptable Knowledge - Based on the types of wastes that were solidified under this IDC, it is assumed that only trace quantities of organic solvents are present and organic RGNs are not warranted.	
808	Solidified Process Solids (MW)	RFP	280, 803-Rev7	Trichloroethane, 1,1,1- = TCA	17			17	0	0		Note for RGN: See INEL-96/0280 Acceptable Knowledge - Based on the types of wastes that were solidified under this IDC, it is assumed that only trace quantities of organic solvents are present and organic RGNs are not warranted.	
808	Solidified Process Solids (MW)	RFP	280, 803-Rev7	Trichloroethylene = Trichloroethene = TCE	17			17	0	0		Note for RGN: See INEL-96/0280 Acceptable Knowledge - Based on the types of wastes that were solidified under this IDC, it is assumed that only trace quantities of organic solvents are present and organic RGNs are not warranted.	
808	Solidified Process Solids (MW)	RFP	280, 803-Rev7	Xylene = C6H4(CH3)2 = Dimethyl benzene	18			18	0	0		Note for RGN: See INEL-96/0280 Acceptable Knowledge - Based on the types of wastes that were solidified under this IDC, it is assumed that only trace quantities of organic solvents are present and organic RGNs are not warranted.	
807a	Solidified Bypass Sludge, Bldg. 374, After 3/87 (MW)	RFP	280, 803-Rev7	Acetone = Dimethyl ketone	19			19	0	0	2 ppmv	Mean sludge HSG analytical data.	D006-D011, D032, F001 F002, F005-F007, F009
807a	Solidified Bypass Sludge, Bldg. 374, After 3/87 (MW)	RFP	280, 803-Rev7	Arsenic = As	24			24	0	0	4.00E-04	Mean sludge solids analytical data.	
807a	Solidified Bypass Sludge, Bldg. 374, After 3/87 (MW)	RFP	280, 803-Rev7	Barium = Ba	21	24	107	24	0	0	0.005	Mean sludge solids analytical data.	
807a	Solidified Bypass Sludge, Bldg. 374, After 3/87 (MW)	RFP	280, 803-Rev7	Benzene	18			18	0	0	5.00E-05	Mean sludge solids analytical data.	
807a	Solidified Bypass Sludge, Bldg. 374, After 3/87 (MW)	RFP	803-Rev7	Beryllium = Be	24			24	0	0			
807a	Solidified Bypass Sludge, Bldg. 374, After 3/87 (MW)	RFP	280, 803-Rev7	Butanol = Butyl Alcohol = C4H9OH	4			4	0	0	0.7 ppmv	Mean sludge HSG analytical data.	
807a	Solidified Bypass Sludge, Bldg. 374, After 3/87 (MW)	RFP	280, 803-Rev7	Butanone, 2- = (Methyl ethyl ketone)	19			19	0	0	9.00E-05	Mean sludge solids analytical data.	
807a	Solidified Bypass Sludge, Bldg. 374, After 3/87 (MW)	RFP	280, 803-Rev7	Cadmium = Cd	23	24		24	0	0	7.00E-04	Mean sludge solids analytical data.	
807a	Solidified Bypass Sludge, Bldg. 374, After 3/87 (MW)	RFP	280, 803-Rev7	Carbon Tetrachloride = CCl4 = Tetrachloromethane	17			17	0	0	5.00E-05	Mean sludge solids analytical data.	
807a	Solidified Bypass Sludge, Bldg. 374, After 3/87 (MW)	RFP	280, 803-Rev7	Chromium = Cr	23	24		24	0	0	0.03	Mean sludge solids analytical data.	
807a	Solidified Bypass Sludge, Bldg. 374, After 3/87 (MW)	RFP	12, 280, 803-Rev7	Corrosive	10			10	0	0		Note for RGN: See INEL-96/0280 Acceptable Knowledge - Analysis of nonrepresentative free liquids found in Bldg. 374 solidified aqueous waste indicates a pH of 7 to 12. Not listed as D002 corrosive in RPT-12, although it is listed as D002 in EDF-803.	
807a	Solidified Bypass Sludge, Bldg. 374, After 3/87 (MW)	RFP	280, 803-Rev7	Cyanide	11			11	0	0		Note for RGN: See INEL-96/0280 Acceptable Knowledge - Analysis of bypass sludge indicates a maximum total cyanide concentration 8.2 mg/kg, and a maximum reactive cyanide concentration of 5.36 mg/kg. These cyanide levels will not cause the waste to be reactive.	
807a	Solidified Bypass Sludge, Bldg. 374, After 3/87 (MW)	RFP	280, 803-Rev7	Cyanide cleaning bath solutions	11			11	0	0		Note for RGN: See INEL-96/0280 Acceptable Knowledge - Analysis of bypass sludge indicates a maximum total cyanide concentration 8.2 mg/kg, and a maximum reactive cyanide concentration of 5.36 mg/kg. These cyanide levels will not cause the waste to be reactive.	
807a	Solidified Bypass Sludge, Bldg. 374, After 3/87 (MW)	RFP	280, 803-Rev7	Cyanide plating bath solutions	11			11	0	0		Note for RGN: See INEL-96/0280 Acceptable Knowledge - Analysis of bypass sludge indicates a maximum total cyanide concentration 8.2 mg/kg, and a maximum reactive cyanide concentration of 5.36 mg/kg. These cyanide levels will not cause the waste to be reactive.	
807a	Solidified Bypass Sludge, Bldg. 374, After 3/87 (MW)	RFP	280, 803-Rev7	Dichloropropene, trans-1,3- = (Dichloropropylene)	17			17	0	0		Note for RGN: See INEL-96/0280 Acceptable Knowledge - Only trace quantities assumed to be present based on low VOC content of waste and lack of documented use at RFP.	
807a	Solidified Bypass Sludge, Bldg. 374, After 3/87 (MW)	RFP	280, 803-Rev7	Ethyl benzene = Phenylethane	18			18	0	0	0.3 ppmv	Mean sludge HSG analytical data.	
807a	Solidified Bypass Sludge, Bldg. 374, After 3/87 (MW)	RFP	280, 803-Rev7	Freon = 1,1,2-Trichloro-1,2,2-Trifluorethane	17			17	0	0	9 ppmv	Mean sludge HSG analytical data.	
807a	Solidified Bypass Sludge, Bldg. 374, After 3/87 (MW)	RFP	280, 803-Rev7	Hexachlorobenzene	17			17	0	0	1.00E-05	New constituent identified (per EDF-803 Rev 7). Mean sludge solids analytical data.	

807a	Solidified Bypass Sludge, Bldg. 374, After 3/87 (MW)	RFP	280, 803-Rev7	Lead = Pb	23	24		24	0	0	0.004	Mean sludge solids analytical data.	
807a	Solidified Bypass Sludge, Bldg. 374, After 3/87 (MW)	RFP	280, 803-Rev7	Mercury = Hg	24			24	0	0	8.00E-04	Mean sludge solids analytical data.	
807a	Solidified Bypass Sludge, Bldg. 374, After 3/87 (MW)	RFP	280, 803-Rev7	Methanol = Methyl Alcohol = CH3OH	4			4	0	0	6 ppmv	Mean sludge HSG analytical data.	
807a	Solidified Bypass Sludge, Bldg. 374, After 3/87 (MW)	RFP	280, 803-Rev7	Methylene Chloride = CH2Cl2 = Dichloromethane	17			17	0	0	5 ppmv	Mean sludge HSG analytical data	
807a	Solidified Bypass Sludge, Bldg. 374, After 3/87 (MW)	RFP	280, 803-Rev7	Perclene = Perchloroethylene = Tetrachloroethene, 1,1,2,2-	17			17	0	0	5.00E-05	New constituent identified (per EDF-803, Rev 7). Mean sludge solids analytical data.	
807a	Solidified Bypass Sludge, Bldg. 374, After 3/87 (MW)	RFP	280, 803-Rev7	Selenium = Se	22	23	24	24	0	0	1.00E-04	Mean sludge solids analytical data.	
807a	Solidified Bypass Sludge, Bldg. 374, After 3/87 (MW)	RFP	280, 803-Rev7	Silver = Ag	24			24	0	0	0.008	Mean sludge solids analytical data.	
807a	Solidified Bypass Sludge, Bldg. 374, After 3/87 (MW)	RFP	280, 803-Rev7	Styrene = Vinylbenzene	16	28	103	16	0	0		Note for RGN: See INEL-96/0280 Acceptable Knowledge - Organic results for Bldg. 374 sludge waste. Total Conc. = 10 mg/kg	
807a	Solidified Bypass Sludge, Bldg. 374, After 3/87 (MW)	RFP	280, 803-Rev7	Tetrachloroethane, 1,1,2,2-	17			17	0	0	0.1 ppmv	Mean sludge HSG analytical data.	
807a	Solidified Bypass Sludge, Bldg. 374, After 3/87 (MW)	RFP	280, 803-Rev7	Toluene = Toluol = Methylbenzene	16			16	0	0	3 ppmv	Mean sludge HSG analytical data.	
807a	Solidified Bypass Sludge, Bldg. 374, After 3/87 (MW)	RFP	280, 803-Rev7	Trichloroethane, 1,1,1- = TCA	17			17	0	0	50 ppmv	Mean sludge HSG analytical data.	
807a	Solidified Bypass Sludge, Bldg. 374, After 3/87 (MW)	RFP	280, 803-Rev7	Trichloroethylene = Trichloroethene = TCE	17			17	0	0	7.00E-05	Mean sludge solids analytical data.	
807a	Solidified Bypass Sludge, Bldg. 374, After 3/87 (MW)	RFP	280, 803-Rev7	Xylene = C6H4(CH3)2 = Dimethyl benzene	16			16	0	0	1 ppmv	Mean sludge HSG analytical data.	
807b	Cemented Incinerator Sludge, Bldg. 771, Prior to 4/87 (MW)	RFP	280, 803-Rev7	Acetone = Dimethyl ketone	19			19	0	0	1 ppmv	New constituent identified (per EDF-803, Rev 7). Mean sludge HSG analytical data.	D004-D011, D022, F001-F003, F005-F007, F009
807b	Cemented Incinerator Sludge, Bldg. 771, Prior to 4/87 (MW)	RFP	280, 803-Rev7	Arsenic = As	24			24	0	0	8.00E-04	Mean sludge solids analytical data.	
807b	Cemented Incinerator Sludge, Bldg. 771, Prior to 4/87 (MW)	RFP	280, 803-Rev7	Barium = Ba	21	24	107	24	0	0	0.02	Mean sludge solids analytical data.	
807b	Cemented Incinerator Sludge, Bldg. 771, Prior to 4/87 (MW)	RFP	280, 803-Rev7	Benzene	18			18	0	0	4.00E-05	New constituent identified (per EDF-803, Rev 7). Mean sludge solids analytical data.	
807b	Cemented Incinerator Sludge, Bldg. 771, Prior to 4/87 (MW)	RFP	280, 803-Rev7	Cadmium = Cd	23	24		24	0	0	0.01	Mean sludge solids analytical data.	
807b	Cemented Incinerator Sludge, Bldg. 771, Prior to 4/87 (MW)	RFP	280, 803-Rev7	Carbon Tetrachloride = CCl4 = Tetrachloromethane	17			17	0	0	2.00E-04	New constituent identified (per EDF-803, Rev 7). Mean sludge solids analytical data.	
807b	Cemented Incinerator Sludge, Bldg. 771, Prior to 4/87 (MW)	RFP	280, 803-Rev7	Chloroform = Trichloromethane	17			17	0	0	6.00E-05	New constituent identified (per EDF-803, Rev 7). Mean sludge solids analytical data.	
807b	Cemented Incinerator Sludge, Bldg. 771, Prior to 4/87 (MW)	RFP	280, 803-Rev7	Chromium = Cr	23	24		24	0	0	0.008	Mean sludge solids analytical data.	
807b	Cemented Incinerator Sludge, Bldg. 771, Prior to 4/87 (MW)	RFP	280, 803-Rev7	Cyanide cleaning bath solutions	11			11	0	0		New constituent identified (per EDF-803, Rev 7). See INEL-96/0280 Acceptable Knowledge. Only trace CN concentrations are expected.	
807b	Cemented Incinerator Sludge, Bldg. 771, Prior to 4/87 (MW)	RFP	280, 803-Rev7	Cyanide plating bath solutions	11			11	0	0		New constituent identified (per EDF-803, Rev 7). See INEL-96/0280 Acceptable Knowledge. Only trace CN concentrations are expected.	
807b	Cemented Incinerator Sludge, Bldg. 771, Prior to 4/87 (MW)	RFP	280, 803-Rev7	Electroplating sludges	11	24		11	0	0		New constituent identified (per EDF-803, Rev 7). See INEL-96/0280 Acceptable Knowledge. Only trace CN concentrations are expected.	
807b	Cemented Incinerator Sludge, Bldg. 771, Prior to 4/87 (MW)	RFP	280, 803-Rev7	Freon = 1,1,2-Trichloro-1,2,2-Trifluoroethane	17			17	0	0	2 ppmv	New constituent identified (per EDF-803, Rev 7). Mean sludge HSG analytical data.	
807b	Cemented Incinerator Sludge, Bldg. 771, Prior to 4/87 (MW)	RFP	280, 803-Rev7	Lead = Pb	23	24		24	0	0	0.03	Mean sludge solids analytical data.	
807b	Cemented Incinerator Sludge, Bldg. 771, Prior to 4/87 (MW)	RFP	280, 803-Rev7	Mercury = Hg	24			24	0	0	8.00E-05	Mean sludge solids analytical data.	
807b	Cemented Incinerator Sludge, Bldg. 771, Prior to 4/87 (MW)	RFP	280, 803-Rev7	Methanol = Methyl Alcohol = CH3OH	4			4	0	0	5 ppmv	New constituent identified (per EDF-803, Rev 7). Mean sludge HSG analytical data.	
807b	Cemented Incinerator Sludge, Bldg. 771, Prior to 4/87 (MW)	RFP	280, 803-Rev7	Methylene Chloride = CH2Cl2 = Dichloromethane	17			17	0	0	1 ppmv	Mean sludge HSG analytical data.	
807b	Cemented Incinerator Sludge, Bldg. 771, Prior to 4/87 (MW)	RFP	280, 803-Rev7	Perclene = Perchloroethylene = Tetrachloroethene, 1,1,2,2-	17			17	0	0	6.00E-05	New constituent identified (per EDF-803, Rev 7). Mean sludge solids analytical data.	
807b	Cemented Incinerator Sludge, Bldg. 771, Prior to 4/87 (MW)	RFP	280, 803-Rev7	Selenium = Se	22	23	24	24	0	0	1.00E-04	Mean sludge solids analytical data.	
807b	Cemented Incinerator Sludge, Bldg. 771, Prior to 4/87 (MW)	RFP	280, 803-Rev7	Silver = Ag	24			24	0	0	1.00E-04	Mean sludge solids analytical data.	
807b	Cemented Incinerator Sludge, Bldg. 771, Prior to 4/87 (MW)	RFP	280, 803-Rev7	Toluene = Toluol = Methylbenzene	16			16	0	0	17 ppmv	Mean sludge HSG analytical data.	
807b	Cemented Incinerator Sludge, Bldg. 771, Prior to 4/87 (MW)	RFP	280, 803-Rev7	Trichloroethane, 1,1,1- = TCA	17			17	0	0	19 ppmv	Mean sludge HSG analytical data.	
807b	Cemented Incinerator Sludge, Bldg. 771, Prior to 4/87 (MW)	RFP	280, 803-Rev7	Trichloroethylene = Trichloroethene = TCE	17			17	0	0	8.00E-05	New constituent identified (per EDF-803, Rev 7). Mean sludge solids analytical data.	
807b	Cemented Incinerator Sludge, Bldg. 771, Prior to 4/87 (MW)	RFP	280, 803-Rev7	Xylene = C6H4(CH3)2 = Dimethyl benzene	16			16	0	0	0.5 ppmv	Mean sludge HSG analytical data.	
810	Glass, Flasks, Sample Vials, etc. (MW)	Mound	CLM	Glass	0			0	0	0			D009
810	Glass, Flasks, Sample Vials, etc. (MW)	Mound	421, 803-Rev7, RAV	Mercury = Hg	24			24	0	0		Characteristic: EP Toxic	
810	Glass, Flasks, Sample Vials, etc. (MW)	Mound	12, 803-Rev7, CLM	Nitric Acid = HNO3	2			2	0	0		Not listed as corrosive in EDF-803 or RPT-12.	
810	Glass, Flasks, Sample Vials, etc. (MW)	Mound	CLM	Waste Description: Whole & broken glassware and glass vials	N/A	N/A	N/A	N/A	N/A	N/A			
811	Evaporator and Dissolver Sludge (MW)	Mound	360, 413, 803-Rev7, CLM	Beryllium = Be	24			24	0	0		Characteristic: Toxic	D001, D009

811	Evaporator and Dissolver Sludge (MW)	Mound	421, 803-Rev7, RAV	Mercury = Hg	24			24	0	0		Characteristic: EP Toxic	
811	Evaporator and Dissolver Sludge (MW)	Mound	12, 369, 413, 421, 803-Rev7	Nitrates	104			104	0	N/A		Listed as D001 due to nitrates in EDF-803 and RPT-12.	
811	Evaporator and Dissolver Sludge (MW)	Mound	12, 803-Rev7, CLM	Nitric Acid = HNO3	2			2	0	0		Not listed as corrosive in EDF-803 or RPT-12.	
811	Evaporator and Dissolver Sludge (MW)	Mound	CLM	Sludge	0			0	0	0			
811	Evaporator and Dissolver Sludge (MW)	Mound	CLM	Waste Description: Dry evaporator and dissolver sludge. Sludge or insoluble residue generated will range from powder to sand-like particles.	N/A	N/A	N/A	N/A	N/A	N/A			
812	Spent Ion Exchange Resin	Mound	TRUW-12	Nitrates	N/A	N/A	N/A	N/A	N/A	N/A		No containers are assigned this IDC. There are ener containers with ion exchange resin in some other containers.	None
813	Glass Filters and Fiberglass (MW)	Mound	CLM	Filters	0			0	0	0			D001, D002, D009
813	Glass Filters and Fiberglass (MW)	Mound	421, 803-Rev7, RAV	Mercury = Hg	24			24	0	0		Characteristic: EP Toxic	
813	Glass Filters and Fiberglass (MW)	Mound	12, 369, 413, 421, 803-Rev7	Nitrates	104			104	104	104		Listed as D001 for nitrates in EDF-803 and RPT-12.	
813	Glass Filters and Fiberglass (MW)	Mound	12, 369, CLM	Nitric Acid = HNO3	2			2	2	2		Listed as D002 corrosive in EDF-803 and RPT-12.	
813	Glass Filters and Fiberglass (MW)	Mound	CLM	Waste Description: Spun-glass filters, fiberglass prefilters.	N/A	N/A	N/A	N/A	N/A	N/A			
814	Contaminated Mercury or Graphite Crucible (MW)	Mound	CLM	Combustibles	101			101	0	0			D009
814	Contaminated Mercury or Graphite Crucible (MW)	Mound	CLM	Graphite	0			0	0	0			
814	Contaminated Mercury or Graphite Crucible (MW)	Mound	421, 803-Rev7, RAV	Mercury = Hg	24			24	0	0		Characteristic: EP Toxic	
814	Contaminated Mercury or Graphite Crucible (MW)	Mound	CLM	Waste Description: Graphite crucibles and electrodes. Description in the INEL-TCWCIS is listed as contaminated mercury.	N/A	N/A	N/A	N/A	N/A	N/A			
815	Classified Parts (MW)	Mound	12, 803-Rev7	Mercury = Hg	24			24	0	0		Listed only for D009 mercury in EDF-803; "Unknown" in RPT-12.	D009 (EDF-803; RPT-12 lists this as unknown)
817	Cemented Sand, Slag, & Crucible Heels (MW)	RFP	280, 803-Rev7	Butanol = Butyl Alcohol = C4H9OH	4			4	0	0		INEL-96/0280 states that characteristic and listed organic solvents were not used in the process.	D007, D008, F001-F003
817	Cemented Sand, Slag, & Crucible Heels (MW)	RFP	280, 803-Rev7	Carbon Tetrachloride = CCl4 = Tetrachloromethane	17			17	0	0		INEL-96/0280 states that characteristic and listed organic solvents were not used in the process.	
817	Cemented Sand, Slag, & Crucible Heels (MW)	RFP	803-Rev7	Chromium = Cr	23	24		24	0	0			
817	Cemented Sand, Slag, & Crucible Heels (MW)	RFP	280, 803-Rev7	Freon = 1,1,2-Trichloro-1,2,2-Trifluoroethane	17			17	0	0		INEL-96/0280 states that characteristic and listed organic solvents were not used in the process.	
817	Cemented Sand, Slag, & Crucible Heels (MW)	RFP	280, 803-Rev7	Lead = Pb	23	24		23	0	0		Note for RGN: See INEL-96/0280 Acceptable Knowledge - The only source of toxicity characteristic metals was in the chromium...and the fused stainless-steel on used Leco crucibles.	
817	Cemented Sand, Slag, & Crucible Heels (MW)	RFP	280, 803-Rev7	Methanol = Methyl Alcohol = CH3OH	4			4	0	0		INEL-96/0280 states that characteristic and listed organic solvents were not used in the process.	
817	Cemented Sand, Slag, & Crucible Heels (MW)	RFP	280, 803-Rev7	Methylene Chloride = CH2Cl2 = Dichloromethane	17			17	0	0		INEL-96/0280 states that characteristic and listed organic solvents were not used in the process.	
817	Cemented Sand, Slag, & Crucible Heels (MW)	RFP	280, 803-Rev7	Trichloroethane, 1,1,1- = TCA	17			17	0	0		INEL-96/0280 states that characteristic and listed organic solvents were not used in the process.	
817	Cemented Sand, Slag, & Crucible Heels (MW)	RFP	280, 803-Rev7	Xylene = C8H4(CH3)2 = Dimethyl benzene	16			16	0	0		INEL-96/0280 states that characteristic and listed organic solvents were not used in the process.	
818	Cemented Incinerator Ash (MW)	RFP	803-Rev7	Arsenic = As	24			24	0	0			D004-D011, F001-F003, F005
818	Cemented Incinerator Ash (MW)	RFP	803-Rev7	Barium = Ba	21	24	107	24	0	0			
818	Cemented Incinerator Ash (MW)	RFP	803-Rev7	Butanol = Butyl Alcohol = C4H9OH	4			4	0	0		INEL-96/0280 states that the waste consists of IDC 420 immobilized in Portland cement. Trace organic solvents are assumed to be present at levels similar to IDCs 280, 371, 377, and 807b.	
818	Cemented Incinerator Ash (MW)	RFP	803-Rev7	Cadmium = Cd	23	24		24	0	0			
818	Cemented Incinerator Ash (MW)	RFP	803-Rev7	Carbon Tetrachloride = CCl4 = Tetrachloromethane	17			17	0	0			
818	Cemented Incinerator Ash (MW)	RFP	803-Rev7	Chromium = Cr	23	24		24	0	0			
818	Cemented Incinerator Ash (MW)	RFP	803-Rev7	Freon = 1,1,2-Trichloro-1,2,2-Trifluoroethane	17			17	0	0			
818	Cemented Incinerator Ash (MW)	RFP	803-Rev7	Lead = Pb	23	24		24	0	0			
818	Cemented Incinerator Ash (MW)	RFP	803-Rev7	Mercury = Hg	24			24	0	0			
818	Cemented Incinerator Ash (MW)	RFP	803-Rev7	Methanol = Methyl Alcohol = CH3OH	4			4	0	0			
818	Cemented Incinerator Ash (MW)	RFP	803-Rev7	Methylene Chloride = CH2Cl2 = Dichloromethane	17			17	0	0			
818	Cemented Incinerator Ash (MW)	RFP	803-Rev7	Selenium = Se	22	23	24	24	0	0			
818	Cemented Incinerator Ash (MW)	RFP	803-Rev7	Silver = Ag	24			24	0	0			
818	Cemented Incinerator Ash (MW)	RFP	803-Rev7	Toluene = Toluol = Methylbenzene	16			16	0	0			
818	Cemented Incinerator Ash (MW)	RFP	803-Rev7	Trichloroethane, 1,1,1- = TCA	17			17	0	0			
818	Cemented Incinerator Ash (MW)	RFP	803-Rev7	Xylene = C8H4(CH3)2 = Dimethyl benzene	16			16	0	0			
820	Cemented Soot (MW)	RFP	803-Rev7	Arsenic = As	24			24	0	0			D004-D011, F001-F003, F005
820	Cemented Soot (MW)	RFP	803-Rev7	Barium = Ba	21	24	107	24	0	0			
820	Cemented Soot (MW)	RFP	803-Rev7	Butanol = Butyl Alcohol = C4H9OH	4			4	0	0		INEL-96/0280 states that the waste consists of IDC 422 immobilized in Portland cement. Trace organic solvents are assumed to be present at levels similar to IDCs 280, 371, 377, and 807b.	
820	Cemented Soot (MW)	RFP	803-Rev7	Cadmium = Cd	23	24		24	0	0			
820	Cemented Soot (MW)	RFP	803-Rev7	Carbon Tetrachloride = CCl4 = Tetrachloromethane	17			17	0	0			
820	Cemented Soot (MW)	RFP	803-Rev7	Chromium = Cr	23	24		24	0	0			
820	Cemented Soot (MW)	RFP	803-Rev7	Freon = 1,1,2-Trichloro-1,2,2-Trifluoroethane	17			17	0	0			
820	Cemented Soot (MW)	RFP	803-Rev7	Lead = Pb	23	24		24	0	0			
820	Cemented Soot (MW)	RFP	803-Rev7	Mercury = Hg	24			24	0	0			

820	Cemented Soot (MW)	RFP	803-Rev7	Methanol = Methyl Alcohol = CH3OH	4			4	0	0			
820	Cemented Soot (MW)	RFP	803-Rev7	Methylene Chloride = CH2Cl2 = Dichloromethane	17			17	0	0			
820	Cemented Soot (MW)	RFP	803-Rev7	Selenium = Se	22	23	24	24	0	0			
820	Cemented Soot (MW)	RFP	803-Rev7	Silver = Ag	24			24	0	0			
820	Cemented Soot (MW)	RFP	803-Rev7	Toluene = Toluol = Methylbenzene	18			18	0	0			
820	Cemented Soot (MW)	RFP	803-Rev7	Trichloroethane, 1,1,1- = TCA	17			17	0	0			
820	Cemented Soot (MW)	RFP	803-Rev7	Xylene = C6H4(CH3)2 = Dimethyl benzene	18			18	0	0			
822	Cemented Resin (ROW)	RFP	803-Rev7	No EPA HWNs assigned	None	None	None	None	None	None	ROW assumed to have no RGNs.	None	
823	Cemented Miscellaneous Sludge (MW)	RFP	803-Rev7	Arsenic = As	24			24	0	0		D004-D011, F001-F003, F005	
823	Cemented Miscellaneous Sludge (MW)	RFP	803-Rev7	Barium = Ba	21	24	107	24	0	0			
823	Cemented Miscellaneous Sludge (MW)	RFP	280, 803-Rev7	Butanol = Butyl Alcohol = C4H9OH	4			4	0	0	Note for RGN: See INEL-96/0280 Acceptable Knowledge - Based on the types of wastes that were solidified under this IDC, it is assumed that only trace quantities of organic solvents are present and organic RGNs are not warranted.		
823	Cemented Miscellaneous Sludge (MW)	RFP	803-Rev7	Cadmium = Cd	23	24		24	0	0			
823	Cemented Miscellaneous Sludge (MW)	RFP	280, 803-Rev7	Carbon Tetrachloride = CCl4 = Tetrachloromethane	17			17	0	0	Note for RGN: See INEL-96/0280 Acceptable Knowledge - Based on the types of wastes that were solidified under this IDC, it is assumed that only trace quantities of organic solvents are present and organic RGNs are not warranted.		
823	Cemented Miscellaneous Sludge (MW)	RFP	803-Rev7	Chromium = Cr	23	24		24	0	0			
823	Cemented Miscellaneous Sludge (MW)	RFP	280, 803-Rev7	Freon = 1,1,2-Trichloro-1,2,2-Trifluoroethane	17			17	0	0	Note for RGN: See INEL-96/0280 Acceptable Knowledge - Based on the types of wastes that were solidified under this IDC, it is assumed that only trace quantities of organic solvents are present and organic RGNs are not warranted.		
823	Cemented Miscellaneous Sludge (MW)	RFP	803-Rev7	Lead = Pb	23	24		24	0	0			
823	Cemented Miscellaneous Sludge (MW)	RFP	803-Rev7	Mercury = Hg	24			24	0	0	Note: EDF-803 originally listed Mercury CAS# as 7439-92-1 (Lead).		
823	Cemented Miscellaneous Sludge (MW)	RFP	280, 803-Rev7	Methanol = Methyl Alcohol = CH3OH	4			4	0	0	Note for RGN: See INEL-96/0280 Acceptable Knowledge - Based on the types of wastes that were solidified under this IDC, it is assumed that only trace quantities of organic solvents are present and organic RGNs are not warranted.		
823	Cemented Miscellaneous Sludge (MW)	RFP	280, 803-Rev7	Methyl ethyl ketone = Butanone	18			18	0	0	Note for RGN: See INEL-96/0280 Acceptable Knowledge - Based on the types of wastes that were solidified under this IDC, it is assumed that only trace quantities of organic solvents are present and organic RGNs are not warranted.		
823	Cemented Miscellaneous Sludge (MW)	RFP	280, 803-Rev7	Methylene Chloride = CH2Cl2 = Dichloromethane	17			17	0	0	Note for RGN: See INEL-96/0280 Acceptable Knowledge - Based on the types of wastes that were solidified under this IDC, it is assumed that only trace quantities of organic solvents are present and organic RGNs are not warranted.		
823	Cemented Miscellaneous Sludge (MW)	RFP	803-Rev7	Selenium = Se	22	23	24	24	0	0			
823	Cemented Miscellaneous Sludge (MW)	RFP	803-Rev7	Silver = Ag	24			24	0	0			
823	Cemented Miscellaneous Sludge (MW)	RFP	280, 803-Rev7	Toluene = Toluol = Methylbenzene	18			18	0	0	Note for RGN: See INEL-96/0280 Acceptable Knowledge - Based on the types of wastes that were solidified under this IDC, it is assumed that only trace quantities of organic solvents are present and organic RGNs are not warranted.		
823	Cemented Miscellaneous Sludge (MW)	RFP	280, 803-Rev7	Trichloroethane, 1,1,1- = TCA	17			17	0	0	Note for RGN: See INEL-96/0280 Acceptable Knowledge - Based on the types of wastes that were solidified under this IDC, it is assumed that only trace quantities of organic solvents are present and organic RGNs are not warranted.		
823	Cemented Miscellaneous Sludge (MW)	RFP	280, 803-Rev7	Trichloroethylene = Trichloroethene = TCE	17			17	0	0	Note for RGN: See INEL-96/0280 Acceptable Knowledge - Based on the types of wastes that were solidified under this IDC, it is assumed that only trace quantities of organic solvents are present and organic RGNs are not warranted.		
823	Cemented Miscellaneous Sludge (MW)	RFP	280, 803-Rev7	Xylene = C6H4(CH3)2 = Dimethyl benzene	18			18	0	0	Note for RGN: See INEL-96/0280 Acceptable Knowledge - Based on the types of wastes that were solidified under this IDC, it is assumed that only trace quantities of organic solvents are present and organic RGNs are not warranted.		
824	Noncompressible/Noncombustible Equipment Boxes (MW)	Mound	CLM	Aerosol cans	23			23	0	0	Empty aerosol cans should not be a concern.	D005-D011	
824	Noncompressible/Noncombustible Equipment Boxes (MW)	Mound	803-Rev7, RAV	Barium = Ba	21	24	107	24	0	0			
824	Noncompressible/Noncombustible Equipment Boxes (MW)	Mound	803-Rev7, RAV	Cadmium = Cd	23	24		24	0	0			
824	Noncompressible/Noncombustible Equipment Boxes (MW)	Mound	803-Rev7, RAV	Chromium = Cr	23	24		24	0	0			
824	Noncompressible/Noncombustible Equipment Boxes (MW)	Mound	CLM	Fibers	101			101	0	0	Based on the waste description, combustible/flammable materials have been assumed to be minor components of the waste.		
824	Noncompressible/Noncombustible Equipment Boxes (MW)	Mound	CLM	Flerco (aluminum-magnesium-iron silicate)	0			0	0	0			
824	Noncompressible/Noncombustible Equipment Boxes (MW)	Mound	CLM	Gas cylinders	23			23	0	0	Empty gas cylinders should not be a concern.		
824	Noncompressible/Noncombustible Equipment Boxes (MW)	Mound	803-Rev7, RAV	Lead = Pb	23	24		23	0	0			
824	Noncompressible/Noncombustible Equipment Boxes (MW)	Mound	803-Rev7, RAV	Mercury = Hg	24			24	0	0			
824	Noncompressible/Noncombustible Equipment Boxes (MW)	Mound	12, 413, 803-Rev7	Nitrates	104			104	0	0	Note for RGN: IDC 812 Spent Ion Exchange Resin nitrates were packed in a combustible waste drum. Any reaction would have taken place. Not listed as D001 for nitrates in EDF-803 or RPT-12.		
824	Noncompressible/Noncombustible Equipment Boxes (MW)	Mound	CLM	Plastic	101			101	0	0	Based on the waste description, combustible/flammable materials have been assumed to be minor components of the waste.		
824	Noncompressible/Noncombustible Equipment Boxes (MW)	Mound	CLM	Polyurethane	101			101	0	0	Based on the waste description, combustible/flammable materials have been assumed to be minor components of the waste.		
824	Noncompressible/Noncombustible Equipment Boxes (MW)	Mound	803-Rev7, RAV	Selenium = Se	22	23	24	24	0	0			
824	Noncompressible/Noncombustible Equipment Boxes (MW)	Mound	803-Rev7, RAV	Silver = Ag	24			24	0	0			
824	Noncompressible/Noncombustible Equipment Boxes (MW)	Mound	CLM	Stainless steel	23			23	0	0			
824	Noncompressible/Noncombustible Equipment Boxes (MW)	Mound	CLM	Tantalum = Ta	23			23	0	0			
824	Noncompressible/Noncombustible Equipment Boxes (MW)	Mound	CLM	Waste Description: Large tanks, piping, electric motors, HEPA filters, fume hoods, glovebox windows 8oor tbs, Plastic tents, tanks. All packed in standard or oversized boxes.	N/A	N/A	N/A	N/A	N/A	N/A			
825	Equipment Drums, Noncombustible (MW)	Mound	803-Rev7	Barium = Ba	21	24	107	24	0	0		D005-D011	
825	Equipment Drums, Noncombustible (MW)	Mound	803-Rev7	Cadmium = Cd	23	24		24	0	0			

825	Equipment Drums, Noncombustible (MW)	Mound	803-Rev7	Chromium = Cr	23	24		24	0	0			
825	Equipment Drums, Noncombustible (MW)	Mound	CLM	Fire extinguishers	23			23	0	0		Empty fire extinguishers should not be a concern.	
825	Equipment Drums, Noncombustible (MW)	Mound	CLM	Fibrox (aluminum-magnesium-iron silicate)	0			0	0	0			
825	Equipment Drums, Noncombustible (MW)	Mound	CLM	Gas cylinders	23			23	0	0		Empty gas cylinders should not be a concern.	
825	Equipment Drums, Noncombustible (MW)	Mound	803-Rev7	Lead = Pb	23	24		23	0	0			
825	Equipment Drums, Noncombustible (MW)	Mound	803-Rev7	Mercury = Hg	24			24	0	0			
825	Equipment Drums, Noncombustible (MW)	Mound	CLM	Metal	23			23	0	0			
825	Equipment Drums, Noncombustible (MW)	Mound	12, 413, 803-Rev7	Nitrates	104			104	0	0		Note for RGN: IDC 812 Spent Ion Exchange Resin nitrates were packed in a combustible waste drum. Any reaction would have taken place. Not listed as D001 for nitrates in EDF-803 or RPT-12.	
825	Equipment Drums, Noncombustible (MW)	Mound	803-Rev7	Selenium = Se	22	23	24	24	0	0			
825	Equipment Drums, Noncombustible (MW)	Mound	803-Rev7	Silver = Ag	24			24	0	0			
825	Equipment Drums, Noncombustible (MW)	Mound	CLM	Waste Description. Small tanks, dissolvers, motors, pumps, piping, valves, tools, hotplates, grinders, pulsaters, sweeper hose, floor tile, glass. Packaged in drums.	N/A	N/A	N/A	N/A	N/A	N/A			
826	Combustible Equipment Boxes, Rust and Floor Sweepings (ROW)	J. C. Haynes	803-Rev7	None identified	None	None	None	None	None	None		ROW assumed to have no RGNs.	None (EDF-803)
826	Combustible Equipment Boxes, Rust and Floor Sweepings (MW)	Mound	CLM	Fiberglass	0			0	0	0			D009
826	Combustible Equipment Boxes, Rust and Floor Sweepings (MW)	Mound	CLM	Fibrox (aluminum-magnesium-iron silicate)	0			0	0	0			
826	Combustible Equipment Boxes, Rust and Floor Sweepings (MW)	Mound	CLM	Glovebox floor sweepings	101			101	0	0			
826	Combustible Equipment Boxes, Rust and Floor Sweepings (MW)	Mound	421, 803-Rev7, RAV	Mercury = Hg	24			24	0	0	0.4	Characteristic: EP Toxic	
826	Combustible Equipment Boxes, Rust and Floor Sweepings (MW)	Mound	CLM	Methyl methacrylate (Plexiglass)	0			0	0	0			
826	Combustible Equipment Boxes, Rust and Floor Sweepings (MW)	Mound	CLM	Plastic	101			101	0	0			
826	Combustible Equipment Boxes, Rust and Floor Sweepings (MW)	Mound	CLM	Rust	24			24	0	0			
826	Combustible Equipment Boxes, Rust and Floor Sweepings (MW)	Mound	CLM	Waste Description: Large combustible items such as plastic tanks, Plexiglass, fiberglass, wood, Glovebox floor sweepings and rust. Since 1990, Code 826 used for "Equipment Boxes/Combustible" wastes.	N/A			N/A	N/A	N/A			
827	Solid Trash & Dry Laboratory Material (ROW)	J. C. Haynes	803-Rev7	None identified	None	None	None	None	None	None		ROW assumed to have no RGNs.	None (EDF-803)
827	Combustible Equipment Drums (MW)	Mound	413, 421, 803-Rev7, RAV	Lead = Pb	23	24		23	0	0		Characteristic: EP Toxic	D008, D009
827	Combustible Equipment Drums (MW)	Mound	803-Rev7, RAV	Mercury = Hg	24			24	0	0			
831	Dry Combustibles TRU Mixed (MW)	RFP	280, 803-Rev7	Carbon Tetrachloride = CCl4 = Tetrachloromethane	17			17	0	0	440 ppmv	Mean HSG analytical data for IDCs 330/336.	F001, F002
831	Dry Combustibles TRU Mixed (MW)	RFP	280, 281, 803-Rev7	Cyclohexane	29			29	0	0	1 ppmv	Note for RGN: Waste was originally assigned IDC 330 and only changed to IDC 831 if the assay showed it was TRU rather than LLW. (See WASTREN, Inc., Idaho National Engineering Laboratory Code Assessment of the Rocky Flats Transuranic Waste, INEL-95/0281, July 1995, pp. 3-212.) Mean HSG analytical data for IDCs 330/336.	
831	Dry Combustibles TRU Mixed (MW)	RFP	280, 281, 803-Rev7	Dichloroethene, 1,1- = Dichloroethylene, 1,1-	17			17	0	0	2 ppmv	Mean HSG analytical data for IDCs 330/336.	
831	Dry Combustibles TRU Mixed (MW)	RFP	280, 803-Rev7	Ethyl benzene = Phenylethane	18			18	0	0	3 ppmv	Mean HSG analytical data for IDCs 330/336.	
831	Dry Combustibles TRU Mixed (MW)	RFP	280, 803-Rev7	Freon = 1,1,2-Trichloro-1,2,2-Trifluoroethane	17			17	0	0	72 ppmv	Mean HSG analytical data for IDCs 330/336.	
831	Dry Combustibles TRU Mixed (MW)	RFP	280, 803-Rev7	Methylene Chloride = CH2Cl2 = Dichloromethane	17			17	0	0	88 ppmv	Mean HSG analytical data for IDCs 330/336.	
831	Dry Combustibles TRU Mixed (MW)	RFP	280, 803-Rev7	Toluene = Toluol = Methylbenzene	18			18	0	0	17 ppmv	Mean HSG analytical data for IDCs 330/336.	
831	Dry Combustibles TRU Mixed (MW)	RFP	280, 803-Rev7	Trichloroethane, 1,1,1- = TCA	17			17	0	0	160 ppmv	Mean HSG analytical data for IDCs 330/336.	
831	Dry Combustibles TRU Mixed (MW)	RFP	280, 803-Rev7	Xylene = C6H4(CH3)2 = Dimethyl benzene	18			18	0	0	8 ppmv	Mean HSG analytical data for IDCs 330/336.	
832	Contaminated Mercury (MW)	Mound	TRUM-12	Mercury = Hg	24			24	0	0			D009
832	Wet Combustibles TRU Mixed (MW)	RFP	280, 281, 803-Rev7	Benzene	18			18	0	0	1 ppmv	Note for RGN: Waste was originally assigned IDC 336 and only changed to IDC 832 if the assay showed it was TRU rather than LLW. (See WASTREN, Inc., Idaho National Engineering Laboratory Code Assessment of the Rocky Flats Transuranic Waste, INEL-95/0281, July 1995, pp. 3-224.) Mean HSG analytical data for IDCs 330/336.	F001, F002
832	Wet Combustibles TRU Mixed (MW)	RFP	280, 281, 803-Rev7	Carbon Tetrachloride = CCl4 = Tetrachloromethane	17			17	0	0	440 ppmv	Mean HSG analytical data for IDCs 330/336.	
832	Wet Combustibles TRU Mixed (MW)	RFP	280, 281, 803-Rev7	Chloroform = Trichloromethane	17			17	0	0	14 ppmv	Mean HSG analytical data for IDCs 330/336.	
832	Wet Combustibles TRU Mixed (MW)	RFP	280, 281, 803-Rev7	Cyclohexane	29			29	0	0	1 ppmv	Mean HSG analytical data for IDCs 330/336.	
832	Wet Combustibles TRU Mixed (MW)	RFP	280, 281, 803-Rev7	Ethyl benzene = Phenylethane	18			18	0	0	3 ppmv	Mean HSG analytical data for IDCs 330/336.	
832	Wet Combustibles TRU Mixed (MW)	RFP	280, 281, 803-Rev7	Freon = 1,1,2-Trichloro-1,2,2-Trifluoroethane	17			17	0	0	72 ppmv	Mean HSG analytical data for IDCs 330/336.	
832	Wet Combustibles TRU Mixed (MW)	RFP	281, 803-Rev7	Methane	29			29	0	0			

832	Wet Combustibles TRU Mixed (MW)	RFP	280, 281, 803-Rev7	Methylene Chloride = CH2Cl2 = Dichloromethane	17			17	0	0	68 ppmv	Mean HSG analytical data for IDCs 330/336.	
832	Wet Combustibles TRU Mixed (MW)	RFP	280, 281, 803-Rev7	Tetrachloroethane, 1,1,2,2-	17			17	0	0	0.5 ppmv	Mean HSG analytical data for IDCs 330/336.	
832	Wet Combustibles TRU Mixed (MW)	RFP	280, 281, 803-Rev7	Toluene = Toluol = Methylbenzene	16			16	0	0	17 ppmv	Mean HSG analytical data for IDCs 330/336.	
832	Wet Combustibles TRU Mixed (MW)	RFP	280, 281, 803-Rev7	Trichloroethane, 1,1,1- = TCA	17			17	0	0	180 ppmv	Mean HSG analytical data for IDCs 330/336.	
832	Wet Combustibles TRU Mixed (MW)	RFP	280, 281, 803-Rev7	Trimethylbenzene, 1,2,4- = Pseudocumene	16			16	0	0	0.8 ppmv	Mean HSG analytical data for IDCs 330/336.	
832	Wet Combustibles TRU Mixed (MW)	RFP	280, 281,803-Rev7	Xylene = C6H4(CH3)2 = Dimethyl benzene	16			16	0	0	8 ppmv	Mean HSG analytical data for IDCs 330/336.	
833	Plastics TRU Mixed (MW)	RFP	280, 281, 803-Rev7	Carbon Tetrachloride = CCl4 = Tetrachloromethane	17			17	0	0	470 ppmv	Note for RGN: Waste was originally assigned IDC 337 and only changed to IDC 833 if the assay showed it was TRU rather than LLW. (See WASTREN, Inc., Idaho National Engineering Laboratory Code Assessment of the Rocky Flats Transuranic Waste, INEL-95/0281, July 1995; pg. 3-233.) Mean HSG analytical data for IDC 337	F001, F002
833	Plastics TRU Mixed (MW)	RFP	280, 803-Rev7	Chloroform = Trichloromethane	17			17	0	0	25 ppmv	Mean HSG analytical data for IDC 337.	
833	Plastics TRU Mixed (MW)	RFP	280, 803-Rev7	Cyclohexane	29			29	0	0	6 ppmv	Mean HSG analytical data for IDC 337.	
833	Plastics TRU Mixed (MW)	RFP	280, 803-Rev7	Freon = 1,1,2-Trichloro-1,2,2-Trifluoroethane	17			17	0	0	9 ppmv	Mean HSG analytical data for IDC 337.	
833	Plastics TRU Mixed (MW)	RFP	280, 803-Rev7	Methylene Chloride = CH2Cl2 = Dichloromethane	17			17	0	0	2 ppmv	Mean HSG analytical data for IDC 337.	
833	Plastics TRU Mixed (MW)	RFP	280, 803-Rev7	Toluene = Toluol = Methylbenzene	16			16	0	0	18 ppmv	Mean HSG analytical data for IDC 337.	
833	Plastics TRU Mixed (MW)	RFP	280, 803-Rev7	Trichloroethane, 1,1,1- = TCA	17			17	0	0	110 ppmv	Mean HSG analytical data for IDC 337.	
833	Plastics TRU Mixed (MW)	RFP	280, 803-Rev7	Trichloroethylene = Trichloroethene = TCE	17			17	0	0	130 ppmv	Mean HSG analytical data for IDC 337.	
833	Plastics TRU Mixed (MW)	RFP	280, 803-Rev7	Xylene = C6H4(CH3)2 = Dimethyl benzene	16			16	0	0	6 ppmv	Mean HSG analytical data for IDC 337.	
834	High Level Acid (MW)	Mound	369, CLM	Calcium Carbonate = CaCO3	0			0	0	0		Drums that had pressurization problems were further treated by splitting the contents into multiple drums, treating them with Fiorco, storing them for 3 months, then rechecking for pressurization. Since Feb, 1982, the waste has been neutralized with caustic and combined with caustic waste (code 835) prior to shipment to INEL.	D001, D002
834	High Level Acid (MW)	Mound	CLM	Caustic liquid waste	10			10	0	0		Based on waste description, this waste assumed to be acidic rather than caustic.	
834	High Level Acid (MW)	Mound	369, CLM	Fiorco (aluminum-magnesium-iron silicate)	0			0	0	0			
834	High Level Acid (MW)	Mound	369	Hydrochloric Acid = HCL = Muriatic acid	1			1	0	0			
834	High Level Acid (MW)	Mound	369	Hydrofluoric Acid = HF = Hydrogen Fluoride	1	15		1	0	0			
834	High Level Acid (MW)	Mound	12, 369, 413, 803-Rev7, RAV	Nitrates	104			104	0	N/A		Listed as D001 due to nitrates in EDF-803 and RPT-12.	
834	High Level Acid (MW)	Mound	12, 369, 421 803-Rev7, CLM	Nitric Acid = HNO3	2			2	0	N/A		Characteristic Corrosive. Some older containers may be pressurized due to reaction between Acid and CaCO3 (1974-1975). Since 1982, all acidic wastes have been neutralized, made basic and combined with caustic wastes before processing. Drums are shipped as Code 835. Listed as D002 corrosive in EDF-803 and RPT-12.	
834	High Level Acid (MW)	Mound	369	Oxalic Acids	3			3	0	0			
834	High Level Acid (MW)	Mound	369	Sulfuric Acid = H2SO4 = Oil of Vitriol, Oleum	2	107		2	0	0			
834	High Level Acid (MW)	Mound	CLM	Waste Description: Contaminated acidic liquid waste absorbed on clay (Fiorco)	N/A	N/A	N/A	N/A	N/A	N/A			
835	High Level Caustic (MW)	Mound	369, CLM	Ammonium Hydroxide = NH4OH	10			10	0	0			D002
835	High Level Caustic (MW)	Mound	369, CLM	Fiorco (aluminum-magnesium-iron silicate)	0			0	0	0		A naturally occuring clay called Montmorillonite with a blend of Attapulgite. An aluminum-magnesium-iron silicate with traces of other metals. Since Feb, 1982, all acidic waste has been neutralized with caustic and combined with this waste stream.	
835	High Level Caustic (MW)	Mound	CLM	Hydrochloric Acid = HCL = Muriatic acid	1			1	0	0		Based on waste description, this waste assumed to be caustic rather than acidic.	
835	High Level Caustic (MW)	Mound	CLM	Hydrofluoric Acid = HF = Hydrogen Fluoride	1	15		1	0	0		Based on waste description, this waste assumed to be caustic rather than acidic.	
835	High Level Caustic (MW)	Mound	CLM	Nitric Acid = HNO3	2			2	0	0		Based on waste description, this waste assumed to be caustic rather than acidic.	
835	High Level Caustic (MW)	Mound	12, 369, 803-Rev7, CLM	Sodium Hydroxide = NaOH = Caustic soda = Lye	10			10	0	N/A		Listed as D002 corrosive in EDF-803 and RPT-12.	
835	High Level Caustic (MW)	Mound	CLM	Waste Description: Contaminated caustic liquid waste absorbed on clay (Fiorco)	N/A	N/A	N/A	N/A	N/A	N/A			
836	High Level Sludge/Cement (MW)	Mound	803-Rev7, RAV	Acetone = Dimethyl ketone	19			19	0	0	0.01	Based on waste description, organic solvents assumed to be at trace levels in aqueous waste water.	D002, D006-D011, F001-F003
836	High Level Sludge/Cement (MW)	Mound	413, CLM	Acid	2			2	0	0		Note for RGN: Used RGN 2 for Acids, Mineral, Oxidizing because it's the worst case. Based on waste description, any acids are assumed to be neutralized with NaOH.	
836	High Level Sludge/Cement (MW)	Mound	CLM	Amorphous Carbon	0			0	0	0			
836	High Level Sludge/Cement (MW)	Mound	413, 803-Rev7	Beryllium = Be	24			24	0	0			
836	High Level Sludge/Cement (MW)	Mound	803-Rev7, RAV	Cadmium = Cd	23	24		24	0	0	0.001		
836	High Level Sludge/Cement (MW)	Mound	CLM	Calcium Chloride = CaCl2	24			24	0	0			
836	High Level Sludge/Cement (MW)	Mound	803-Rev7, RAV	Chromium = Cr	23	24		24	0	0			
836	High Level Sludge/Cement (MW)	Mound	413, 803-Rev7, RAV	Freon = 1,1,2-Trichloro-1,2,2-Trifluoroethane	17			17	0	0			

832	Wet Combustibles TRU Mixed (MW)	RFP	280, 281, 803-Rev7	Methylene Chloride = CH2Cl2 = Dichloromethane	17			17	0	0	68 ppmv	Mean HSG analytical data for IDCs 330/336.	
832	Wet Combustibles TRU Mixed (MW)	RFP	280, 281, 803-Rev7	Tetrachloroethene, 1,1,2,2-	17			17	0	0	0.5 ppmv	Mean HSG analytical data for IDCs 330/336.	
832	Wet Combustibles TRU Mixed (MW)	RFP	280, 281, 803-Rev7	Toluene = Toluol = Methylbenzene	16			16	0	0	17 ppmv	Mean HSG analytical data for IDCs 330/336.	
832	Wet Combustibles TRU Mixed (MW)	RFP	280, 281, 803-Rev7	Trichloroethane, 1,1,1- = TCA	17			17	0	0	160 ppmv	Mean HSG analytical data for IDCs 330/336.	
832	Wet Combustibles TRU Mixed (MW)	RFP	280, 281, 803-Rev7	Trimethylbenzene, 1,2,4- = Pseudocumene	16			16	0	0	0.8 ppmv	Mean HSG analytical data for IDCs 330/336.	
832	Wet Combustibles TRU Mixed (MW)	RFP	280, 281,803-Rev7	Xylene = C6H4(CH3)2 = Dimethyl benzene	16			16	0	0	8 ppmv	Mean HSG analytical data for IDCs 330/336.	
833	Plastics TRU Mixed (MW)	RFP	280, 281, 803-Rev7	Carbon Tetrachloride = CCl4 = Tetrachloromethane	17			17	0	0	470 ppmv	Note for RGN: Waste was originally assigned IDC 337 and only changed to IDC 833 if the assay showed it was TRU rather than LLW. (See WASTREN, Inc., Idaho National Engineering Laboratory Code Assessment of the Rocky Flats Transuranic Waste. INEL-95/0281. July 1995; pg. 3-233.) Mean HSG analytical data for IDC 337.	F001, F002
833	Plastics TRU Mixed (MW)	RFP	280, 803-Rev7	Chloroform = Trichloromethane	17			17	0	0	25 ppmv	Mean HSG analytical data for IDC 337.	
833	Plastics TRU Mixed (MW)	RFP	280, 803-Rev7	Cyclohexane	29			29	0	0	6 ppmv	Mean HSG analytical data for IDC 337.	
833	Plastics TRU Mixed (MW)	RFP	280, 803-Rev7	Freon = 1,1,2-Trichloro-1,2,2-Trifluoroethane	17			17	0	0	9 ppmv	Mean HSG analytical data for IDC 337.	
833	Plastics TRU Mixed (MW)	RFP	280, 803-Rev7	Methylene Chloride = CH2Cl2 = Dichloromethane	17			17	0	0	2 ppmv	Mean HSG analytical data for IDC 337.	
833	Plastics TRU Mixed (MW)	RFP	280, 803-Rev7	Toluene = Toluol = Methylbenzene	16			16	0	0	10 ppmv	Mean HSG analytical data for IDC 337.	
833	Plastics TRU Mixed (MW)	RFP	280, 803-Rev7	Trichloroethane, 1,1,1- = TCA	17			17	0	0	110 ppmv	Mean HSG analytical data for IDC 337.	
833	Plastics TRU Mixed (MW)	RFP	280, 803-Rev7	Trichloroethylene = Trichloroethene = TCE	17			17	0	0	130 ppmv	Mean HSG analytical data for IDC 337.	
833	Plastics TRU Mixed (MW)	RFP	280, 803-Rev7	Xylene = C6H4(CH3)2 = Dimethyl benzene	16			16	0	0	8 ppmv	Mean HSG analytical data for IDC 337.	
834	High Level Acid (MW)	Mound	369, CLM	Calcium Carbonate = CaCO3	0			0	0	0		Drums that had pressurization problems were further treated by splitting the contents into multiple drums, treating them with Florco, staging them for 3 months, then rechecking for pressurization. Since Feb. 1982, this waste has been neutralized with caustic and combined with caustic waste (code 835) prior to shipment to INEL.	D001, D002
834	High Level Acid (MW)	Mound	CLM	Caustic liquid waste	10			10	0	0		Based on waste description, this waste assumed to be acidic rather than caustic.	
834	High Level Acid (MW)	Mound	369, CLM	Florco (aluminum-magnesium-iron silicate)	0			0	0	0			
834	High Level Acid (MW)	Mound	369	Hydrochloric Acid = HCL = Muriatic acid	1			1	0	0			
834	High Level Acid (MW)	Mound	369	Hydrofluoric Acid = HF = Hydrogen Fluoride	1	15		1	0	0			
834	High Level Acid (MW)	Mound	12, 369, 413, 803-Rev7, RAV	Nitrates	106			106	0	N/A		Listed as D001 due to nitrates in EDF-803 and RPT-12.	
834	High Level Acid (MW)	Mound	12, 369, 421 803-Rev7, CLM	Nitric Acid = HNO3	2			2	0	N/A		Characteristic: Corrosive. Some older containers may be pressurized due to reaction between Acid and CaCO3 (1974-1975). Since 1982, all acidic wastes have been neutralized, made basic and combined with caustic wastes before processing. Drums are shipped as Code 835. Listed as D002 corrosive in EDF-803 and RPT-12.	
834	High Level Acid (MW)	Mound	369	Oxalic Acids	3			3	0	0			
834	High Level Acid (MW)	Mound	369	Sulfuric Acid = H2SO4 = Oil of Vitriol, Oleum	2	107		2	0	0			
834	High Level Acid (MW)	Mound	CLM	Waste Description: Contaminated acidic liquid waste absorbed on clay (Florco)	N/A	N/A	N/A	N/A	N/A	N/A			
835	High Level Caustic (MW)	Mound	369, CLM	Ammonium Hydroxide = NH4OH	10			10	0	0			D002
835	High Level Caustic (MW)	Mound	369, CLM	Florco (aluminum-magnesium-iron silicate)	0			0	0	0		A naturally occurring clay called Montmorillonite with a blend of Attapulgite. An aluminum-magnesium-iron silicate with traces of other metals. Since Feb. 1982, all acidic waste has been neutralized with caustic and combined with this waste stream.	
835	High Level Caustic (MW)	Mound	CLM	Hydrochloric Acid = HCL = Muriatic acid	1			1	0	0		Based on waste description, this waste assumed to be caustic rather than acidic.	
835	High Level Caustic (MW)	Mound	CLM	Hydrofluoric Acid = HF = Hydrogen Fluoride	1	15		1	0	0		Based on waste description, this waste assumed to be caustic rather than acidic.	
835	High Level Caustic (MW)	Mound	CLM	Nitric Acid = HNO3	2			2	0	0		Based on waste description, this waste assumed to be caustic rather than acidic.	
835	High Level Caustic (MW)	Mound	12, 369, 803-Rev7, CLM	Sodium Hydroxide = NaOH = Caustic soda = Lye	10			10	0	N/A		Listed as D002 corrosive in EDF-803 and RPT-12.	
836	High Level Caustic (MW)	Mound	CLM	Waste Description: Contaminated caustic liquid waste adsorbed on clay (Florco)	N/A	N/A	N/A	N/A	N/A	N/A			
836	High Level Sludge/Cement (MW)	Mound	803-Rev7, RAV	Acetone = Dimethyl ketone	19			19	0	0	0.01	Based on waste description, organic solvents assumed to be at trace levels in aqueous waste water.	D002, D008-D011, F001-F003
836	High Level Sludge/Cement (MW)	Mound	413, CLM	Acid	2			2	0	0		Note for RGN: Used RGN 2 for Acids, Mineral, Oxidizing because it's the worst case. Based on waste description, any acids are assumed to be neutralized with NaOH.	
836	High Level Sludge/Cement (MW)	Mound	CLM	Amorphous Carbon	0			0	0	0			
836	High Level Sludge/Cement (MW)	Mound	413, 803-Rev7	Beryllium = Be	24			24	0	0			
836	High Level Sludge/Cement (MW)	Mound	803-Rev7, RAV	Cadmium = Cd	23	24		24	0	0	0.001		
836	High Level Sludge/Cement (MW)	Mound	CLM	Calcium Chloride = CaCl2	24			24	0	0			
836	High Level Sludge/Cement (MW)	Mound	803-Rev7, RAV	Chromium = Cr	23	24		24	0	0			
836	High Level Sludge/Cement (MW)	Mound	413, 803-Rev7, RAV	Freon = 1,1,2-Trichloro-1,2,2-Trifluoroethane	17			17	0	0			

848	LSA <100 nCi/g Noncombustible (MW)	Mound	CLM	Waste Description: Nonfire-generated noncombustible wastes: tools, pipe, metal, glass, concrete, plaster, bricks, dirt. Some combustibles may be included	N/A	N/A	N/A	N/A	N/A	N/A			
900	Low Specific Activity Plastics, Paper, etc. (MW)	RFP	803-Rev7	Arsenic = As	24			24	0	0			D004-D011, D029, F001-F003, F005
900	Low Specific Activity Plastics, Paper, etc. (MW)	RFP	803-Rev7	Barium = Ba	21	24	107	24	0	0			
900	Low Specific Activity Plastics, Paper, etc. (MW)	RFP	803-Rev7	Cadmium = Cd	23	24		24	0	0			
900	Low Specific Activity Plastics, Paper, etc. (MW)	RFP	280, 803-Rev7, RAV	Carbon Tetrachloride = CCl4 = Tetrachloromethane	17			17	0	0	0.075	Based on information in INEL-95/0280, it is assumed that organic solvent concentrations will be as low as those for IDCs 001 and 002, since the waste was generated from the same Bldg. 774 liquid waste treatment operations but outside the glovebox lines.	
900	Low Specific Activity Plastics, Paper, etc. (MW)	RFP	803-Rev7	Chromium = Cr	23	24		24	0	0			
900	Low Specific Activity Plastics, Paper, etc. (MW)	RFP	280, 803-Rev7	Dichloroethene, 1,1- = Dichloroethylene, 1,1-	17			17	0	0		Note for RGN: See INEL-95/0280 Acceptable Knowledge - Does not meet the definition of ignitability as defined in 40 CFR 261.21. The materials are not liquid, and an absorbent material was added if moisture was detected.	
900	Low Specific Activity Plastics, Paper, etc. (MW)	RFP	803-Rev7, RAV	Freon = 1,1,2-Trichloro-1,2,2-Trifluoroethane	17			17	0	0	0.15		
900	Low Specific Activity Plastics, Paper, etc. (MW)	RFP	803-Rev7, RAV	Lead = Pb	23	24		24	0	0			
900	Low Specific Activity Plastics, Paper, etc. (MW)	RFP	803-Rev7	Mercury = Hg	24			24	0	0		Note: EDF-803 originally listed Mercury CAS# as 7439-92-1 (Lead).	
900	Low Specific Activity Plastics, Paper, etc. (MW)	RFP	803-Rev7	Methyl ethyl ketone = Butanone	19			19	0	0			
900	Low Specific Activity Plastics, Paper, etc. (MW)	RFP	803-Rev7, RAV	Methylene Chloride = CH2Cl2 = Dichloromethane	17			17	0	0	0.1		
900	Low Specific Activity Plastics, Paper, etc. (MW)	RFP	CLM	Oil-Dri	0			0	0	0			
900	Low Specific Activity Plastics, Paper, etc. (MW)	RFP	280, CLM	Paper	101			101	0	0		Note for RGN: See INEL-95/0280 Acceptable Knowledge - The materials in this waste group are stable and will not undergo violent chemical change.	
900	Low Specific Activity Plastics, Paper, etc. (MW)	RFP	803-Rev7	Perclene = Perchloroethylene = Tetrachloroethene, 1,1,2,2-	17			17	0	0			
900	Low Specific Activity Plastics, Paper, etc. (MW)	RFP	280, CLM	Plastic	101			101	0	0		Note for RGN: See INEL-95/0280 Acceptable Knowledge - The materials in this waste group are stable and will not undergo violent chemical change.	
900	Low Specific Activity Plastics, Paper, etc. (MW)	RFP	CLM	Portland Cement	0			0	0	0			
900	Low Specific Activity Plastics, Paper, etc. (MW)	RFP	803-Rev7	Selenium = Se	22	23	24	24	0	0			
900	Low Specific Activity Plastics, Paper, etc. (MW)	RFP	803-Rev7	Silver = Ag	24			24	0	0			
900	Low Specific Activity Plastics, Paper, etc. (MW)	RFP	803-Rev7	Toluene = Toluol = Methylbenzene	18			18	0	0			
900	Low Specific Activity Plastics, Paper, etc. (MW)	RFP	421, 803-Rev7, RAV	Trichloroethane, 1,1,1- = TCA	17			17	0	0	0.2	Characteristic: Toxic	
900	Low Specific Activity Plastics, Paper, etc. (MW)	RFP	421, 803-Rev7, RAV	Trichloroethylene = Trichloroethene = TCE	17			17	0	0			
900	Low Specific Activity Plastics, Paper, etc. (MW)	RFP	CLM	Waste Description: Plastics, paper, etc. Polyethylene bottles, surgeon's gloves.	N/A	N/A	N/A	N/A	N/A	N/A			
900	Low Specific Activity Plastics, Paper, etc. (MW)	RFP	803-Rev7, RAV	Xylene = C6H4(CH3)2 = Dimethyl benzene	18			18	0	0			
950	Low Specific Activity Metal, Glass, etc. (MW)	RFP	803-Rev7	Arsenic = As	24			24	0	0			D004-D011, F001, F002, F005
950	Low Specific Activity Metal, Glass, etc. (MW)	RFP	803-Rev7	Barium = Ba	21	24	107	24	0	0			
950	Low Specific Activity Metal, Glass, etc. (MW)	RFP	803-Rev7	Cadmium = Cd	23	24		24	0	0			
950	Low Specific Activity Metal, Glass, etc. (MW)	RFP	803-Rev7	Chromium = Cr	23	24		24	0	0			
950	Low Specific Activity Metal, Glass, etc. (MW)	RFP	280, 803-Rev7	Freon = 1,1,2-Trichloro-1,2,2-Trifluoroethane	17			17	0	0		Based on information in INEL-95/0280, it is assumed that organic solvent concentrations will be as low as those for IDCs 001 and 002, since the waste was generated from the same Bldg. 774 liquid waste treatment operations but outside the glovebox lines.	
950	Low Specific Activity Metal, Glass, etc. (MW)	RFP	280, CLM	Furniture	101			101	0	0		Note for RGN: See INEL-95/0280 Acceptable Knowledge - The materials in this waste group are stable and will not undergo violent chemical change.	
950	Low Specific Activity Metal, Glass, etc. (MW)	RFP	366, 413, 421, 803-Rev7, CLM, RAV	Lead = Pb	23	24		23	0	0	0.2	Characteristic: EP Toxic	
950	Low Specific Activity Metal, Glass, etc. (MW)	RFP	803-Rev7	Mercury = Hg	24			24	0	0		Note: EDF-803 originally listed Mercury CAS# as 7439-92-1 (Lead).	
950	Low Specific Activity Metal, Glass, etc. (MW)	RFP	803-Rev7	Methyl ethyl ketone = Butanone	19			19	0	0			
950	Low Specific Activity Metal, Glass, etc. (MW)	RFP	803-Rev7	Methylene Chloride = CH2Cl2 = Dichloromethane	17			17	0	0			
950	Low Specific Activity Metal, Glass, etc. (MW)	RFP	803-Rev7	Selenium = Se	22	23	24	24	0	0			
950	Low Specific Activity Metal, Glass, etc. (MW)	RFP	803-Rev7	Silver = Ag	24			24	0	0			
950	Low Specific Activity Metal, Glass, etc. (MW)	RFP	803-Rev7	Toluene = Toluol = Methylbenzene	18			18	0	0			
950	Low Specific Activity Metal, Glass, etc. (MW)	RFP	CLM	Tools	23			23	0	0			
950	Low Specific Activity Metal, Glass, etc. (MW)	RFP	803-Rev7	Trichloroethane, 1,1,1- = TCA	17			17	0	0			
950	Low Specific Activity Metal, Glass, etc. (MW)	RFP	803-Rev7	Trichloroethylene = Trichloroethene = TCE	17			17	0	0			
950	Low Specific Activity Metal, Glass, etc. (MW)	RFP	CLM	Waste Description: Nonfire generated waste: conduit, pipes, tools, control panels, instrumentation, light bulbs, windows, office equipment, lead shielding, structural metal.	N/A	N/A	N/A	N/A	N/A	N/A			
950	Low Specific Activity Metal, Glass, etc. (MW)	RFP	280, CLM	Windows	101			101	0	0		Note for RGN: See INEL-95/0280 Acceptable Knowledge - The materials in this waste group are stable and will not undergo violent chemical change.	
980	Concrete, Asphalt, etc. (MW)	RFP	803-Rev7	Arsenic = As	24			24	0	0			D004-D011, F001, F002, F005
980	Concrete, Asphalt, etc. (MW)	RFP	CLM	Asphalt	0			0	0	0			
980	Concrete, Asphalt, etc. (MW)	RFP	803-Rev7	Barium = Ba	21	24	107	24	0	0			
980	Concrete, Asphalt, etc. (MW)	RFP	803-Rev7	Cadmium = Cd	23	24		24	0	0			
980	Concrete, Asphalt, etc. (MW)	RFP	803-Rev7	Chromium = Cr	23	24		24	0	0			
980	Concrete, Asphalt, etc. (MW)	RFP	CLM	Dirt	0			0	0	0			
980	Concrete, Asphalt, etc. (MW)	RFP	803-Rev7	Lead = Pb	23	24		23	0	0			
980	Concrete, Asphalt, etc. (MW)	RFP	803-Rev7	Mercury = Hg	24			24	0	0		Note: EDF-803 originally listed Mercury CAS# as 7439-92-1 (Lead).	
980	Concrete, Asphalt, etc. (MW)	RFP	280, 803-Rev7	Methyl ethyl ketone = Butanone	19			19	0	0		Based on information in INEL-95/0280, it is assumed that organic solvent concentrations will be low (similar levels in IDC 374). IDC 980 was replaced by IDC 374 in 1973.	
980	Concrete, Asphalt, etc. (MW)	RFP	803-Rev7	Methylene Chloride = CH2Cl2 = Dichloromethane	17			17	0	0			
980	Concrete, Asphalt, etc. (MW)	RFP	803-Rev7	Selenium = Se	22	23	24	24	0	0			
980	Concrete, Asphalt, etc. (MW)	RFP	803-Rev7	Silver = Ag	24			24	0	0			
980	Concrete, Asphalt, etc. (MW)	RFP	803-Rev7	Toluene = Toluol = Methylbenzene	18			18	0	0			

960	Concrete, Asphalt, etc. (MW)	RFP	803-Rev7	Trichloroethane, 1,1,1- = TCA	17			17	0	0			
960	Concrete, Asphalt, etc. (MW)	RFP	803-Rev7	Trichloroethylene = Trichloroethene = TCE	17			17	0	0			
960	Concrete, Asphalt, etc. (MW)	RFP	CLM	Waste Description: Asphalt. Some dirt, surgeons gloves. Waste was dry when packaged	N/A	N/A	N/A	N/A	N/A	N/A			
970	Wood (MW)	RFP	280, 803-Rev7, RAV	Carbon Tetrachloride = CCl4 = Tetrachloromethane	17			17	0	0	0.075	Based on the waste description in INEL-96/0280, it is assumed that organic solvent concentrations will be low for the waste, generated primarily in Bldg. 771 from the removal of wood filter frames from absolute filters.	D008, F001-F005, F006
970	Wood (MW)	RFP	280, 803-Rev7	Dichloroethene, 1,1- = Dichloroethylene, 1,1-	17			17	0	0		Note for RGN: See INEL-96/0280 Acceptable Knowledge - Does not meet the definition of ignitability as defined in 40 CFR 261.21. The materials are not liquid, and an absorbent material was added if moisture was detected.	
970	Wood (MW)	RFP	803-Rev7, RAV	Freon = 1,1,2-Trichloro-1,2,2-Trifluoroethane	17			17	0	0	0.15		
970	Wood (MW)	RFP	803-Rev7, RAV	Lead = Pb	23	24		23	0	0			
970	Wood (MW)	RFP	803-Rev7	Methyl ethyl ketone = Butanone	19			19	0	0			
970	Wood (MW)	RFP	369, 413, 421, 803-Rev7, RAV	Methylene Chloride = CH2Cl2 = Dichloromethane	17			17	0	0	0.1	Characteristic: Toxic	
970	Wood (MW)	RFP	CLM	Nails	23			23	0	0			
970	Wood (MW)	RFP	280, CLM	Paint	101			101	0	0		Note for RGN: See INEL-96/0280 Acceptable Knowledge - The materials in this waste group are stable and will not undergo violent chemical change.	
970	Wood (MW)	RFP	280, CLM	Plastic	101			101	0	0		Note for RGN: See INEL-96/0280 Acceptable Knowledge - The materials in this waste group are stable and will not undergo violent chemical change.	
970	Wood (MW)	RFP	CLM	Sheetrock	0			0	0	0			
970	Wood (MW)	RFP	803-Rev7	Toluene = Toluol = Methylbenzene	16			16	0	0			
970	Wood (MW)	RFP	421, 803-Rev7, RAV	Trichloroethane, 1,1,1- = TCA	17			17	0	0	0.2	Characteristic: Toxic	
970	Wood (MW)	RFP	421, 803-Rev7, RAV	Trichloroethylene = Trichloroethene = TCE	17			17	0	0			
970	Wood (MW)	RFP	CLM	Waste Description: Lumber, plywood, filter frames, possibly ladders. Plastic sheeting, kimwipes. May include nails, sheetrock, paint. Waste was dry when packaged	N/A	N/A	N/A	N/A	N/A	N/A			
970	Wood (MW)	RFP	280, CLM	Wood	101			101	0	0		Note for RGN: See INEL-96/0280 Acceptable Knowledge - The materials in this waste group are stable and will not undergo violent chemical change.	
970	Wood (MW)	RFP	369, 413, 421, 803-Rev7, RAV	Xylene = C6H4(CH3)2 = Dimethyl benzene	16			16	0	0		Characteristic: Ignitable	
976	Building 776 Process Sludge (MW)	RFP	803-Rev7	Beryllium = Be	24			24	0	0			D005-D009, D022, F001-F003
976	Building 776 Process Sludge (MW)	RFP	369, 413, 421, 803-Rev7, RAV	Butanol = Butyl Alcohol = C4H9OH	4			4	0	0	0.001	Organic solvents assumed to be present in trace quantities, based on similar sludges from Bldgs. 374 and 774.	
976	Building 776 Process Sludge (MW)	RFP	803-Rev7, RAV	Cadmium = Cd	23	24		24	0	0	0.001		
976	Building 776 Process Sludge (MW)	RFP	369, 413, 421, 803-Rev7, RAV	Carbon Tetrachloride = CCl4 = Tetrachloromethane	17			17	0	0	0.003	Characteristic: Toxic	
976	Building 776 Process Sludge (MW)	RFP	803-Rev7, RAV	Chloroform = Trichloromethane	17			17	0	0			
976	Building 776 Process Sludge (MW)	RFP	803-Rev7, RAV	Chromium = Cr	23	24		24	0	0			
976	Building 776 Process Sludge (MW)	RFP	12, 803-Rev7, RAV	Corrosive	0			0	0	0		Not listed as D002 corrosive in EDF-803 or RPT-12.	
976	Building 776 Process Sludge (MW)	RFP	RAV	Dichloroethane, 1,2- = (Ethylene dichloride)	17			17	0	0			
976	Building 776 Process Sludge (MW)	RFP	803-Rev7	Dichloroethene, 1,2- = (Dichloroethylene)	17			17	0	0		Assumed to be present in trace amounts based on similar sludges from Bldgs. 374 and 774.	
976	Building 776 Process Sludge (MW)	RFP	803-Rev7	Dichloroethene, cis-1,2- = (Dichloroethylene)	17			17	0	0		Assumed to be present in trace amounts based on similar sludges from Bldgs. 374 and 774.	
976	Building 776 Process Sludge (MW)	RFP	369, 413, 421, 803-Rev7, RAV	Freon = 1,1,2-Trichloro-1,2,2-Trifluoroethane	17			17	0	0	0.01	Characteristic: Toxic	
976	Building 776 Process Sludge (MW)	RFP	413, 803-Rev7, RAV	Lead = Pb	23	24		24	0	0	0.001		
976	Building 776 Process Sludge (MW)	RFP	803-Rev7, RAV	Mercury = Hg	24			24	0	0			
976	Building 776 Process Sludge (MW)	RFP	369, 413, 421, 803-Rev7, RAV	Methanol = Methyl Alcohol = CH3OH	4			4	0	0	0.003	Characteristic: Ignitable	
976	Building 776 Process Sludge (MW)	RFP	369, 413, 421, 803-Rev7, RAV	Methylene Chloride = CH2Cl2 = Dichloromethane	17			17	0	0	0.07	Characteristic: Toxic	
976	Building 776 Process Sludge (MW)	RFP	803-Rev7, RAV	Perclene = Perchloroethylene = Tetrachloroethene, 1,1,2,2-	17			17	0	0			
976	Building 776 Process Sludge (MW)	RFP	CLM	Portland Cement	0			0	0	0			
976	Building 776 Process Sludge (MW)	RFP	CLM	Sludge	0			0	0	0			
976	Building 776 Process Sludge (MW)	RFP	369, 413, 421, CLM	Sodium Chromate	24			24	0	0		Characteristic: EP Toxic	
976	Building 776 Process Sludge (MW)	RFP	803-Rev7	Tetrachloroethane, 1,1,2,2-	17			17	0	0			
976	Building 776 Process Sludge (MW)	RFP	369, 413, 421, 803-Rev7, RAV	Trichloroethane, 1,1,1- = TCA	17			17	0	0	0.006	Characteristic: Toxic	
976	Building 776 Process Sludge (MW)	RFP	803-Rev7, RAV	Trichloroethylene = Trichloroethene = TCE	17			17	0	0			
976	Building 776 Process Sludge (MW)	RFP	CLM	Waste Description: Sludge mixed with Portland cement.	N/A	N/A	N/A	N/A	N/A	N/A			

978	Building 776 Process Sludge (MW)	RFP	369, 413, 421, 803-Rev7, RAV	Xylene = C6H4(CH3)2 = Dimethyl benzene	16			16	0	0	0.005	Characteristic: Ignitable	
978	Laundry Sludge (MW)	RFP	803-Rev7	Beryllium = Be	24			24	0	0			D006-D008, D022, F001-F003
978	Laundry Sludge (MW)	RFP	803-Rev7, RAV	Butanol = Butyl Alcohol = C4H9OH	4			4	0	0	0.001	Organic solvents assumed to be present in trace quantities, based on similar sludges from Bldgs. 374 and 774.	
978	Laundry Sludge (MW)	RFP	803-Rev7, RAV	Cadmium = Cd	23	24		24	0	0	0.001		
978	Laundry Sludge (MW)	RFP	803-Rev7, RAV	Carbon Tetrachloride = CCl4 = Tetrachloromethane	17			17	0	0	0.003		
978	Laundry Sludge (MW)	RFP	803-Rev7, RAV	Chromium = Cr	23	24		24	0	0			
978	Laundry Sludge (MW)	RFP	12, 803-Rev7, RAV	Corrosive	0			0	0	0		Not listed as D002 corrosive in EDF-803 or RPT-12.	
978	Laundry Sludge (MW)	RFP	CLM	Dirt	0			0	0	0			
978	Laundry Sludge (MW)	RFP	803-Rev7, RAV	Freon = 1,1,2-Trichloro-1,2,2-Trifluoroethane	17			17	0	0	0.01		
978	Laundry Sludge (MW)	RFP	803-Rev7, RAV	Lead = Pb	23	24		24	0	0	0.001		
978	Laundry Sludge (MW)	RFP	CLM	Lint	101			101	0	0		Based on the waste description, combustible/flammable materials have been assumed to be minor components of the waste.	
978	Laundry Sludge (MW)	RFP	803-Rev7, RAV	Mercury = Hg	24			24	0	0			
978	Laundry Sludge (MW)	RFP	803-Rev7, RAV	Methanol = Methyl Alcohol = CH3OH	4			4	0	0	0.003		
978	Laundry Sludge (MW)	RFP	803-Rev7, RAV	Methylene Chloride = CH2Cl2 = Dichloromethane	17			17	0	0	0.07		
978	Laundry Sludge (MW)	RFP	803-Rev7, RAV	Perclene = Perchloroethylene = Tetrachloroethene, 1,1,2,2-	17			17	0	0			
978	Laundry Sludge (MW)	RFP	CLM	Portland Cement	0			0	0	0			
978	Laundry Sludge (MW)	RFP	CLM	Spent detergent	24			24	0	0			
978	Laundry Sludge (MW)	RFP	803-Rev7, RAV	Trichloroethane, 1,1,1- = TCA	17			17	0	0	0.006		
978	Laundry Sludge (MW)	RFP	803-Rev7, RAV	Trichloroethylene = Trichloroethene = TCE	17			17	0	0			
978	Laundry Sludge (MW)	RFP	CLM	Waste Description: laundry sludge mixed with Portland cement.	N/A	N/A	N/A	N/A	N/A	N/A			
978	Laundry Sludge (MW)	RFP	803-Rev7, RAV	Xylene = C6H4(CH3)2 = Dimethyl benzene	16			16	0	0	0.005		
980	Equipment (May contain sludge) (MW)	RFP	369, 413, 421, 803-Rev7, RAV	Carbon Tetrachloride = CCl4 = Tetrachloromethane	17			17	0	0		Organic solvents assumed to be present in trace quantities.	D008, F001, F002 (EDF-803, RPT-12 lists this as unknown)
980	Equipment (May contain sludge) (MW)	RFP	369, 413, 421, 803-Rev7, RAV	Freon = 1,1,2-Trichloro-1,2,2-Trifluoroethane	17			17	0	0		Characteristic: Toxic	
980	Equipment (May contain sludge) (MW)	RFP	369, 413, 421, 803-Rev7, RAV	Lead = Pb	23	24		23	0	0		Characteristic: EP Toxic	
980	Equipment (May contain sludge) (MW)	RFP	369, 413, 421, 803-Rev7, RAV	Methylene Chloride = CH2Cl2 = Dichloromethane	17			17	0	0		Characteristic: Toxic	
980	Equipment (May contain sludge) (MW)	RFP	369, 413, 421, 803-Rev7, RAV	Trichloroethane, 1,1,1- = TCA	17			17	0	0		Characteristic: Toxic	
980	Equipment (May contain sludge) (MW)	RFP	CLM	Waste Description: Unknown. A single drum of waste(07-55884) was shipped to INEL in 1973. An assay record indicates it contains Content Code 290 sludge.	N/A	N/A	N/A	N/A	N/A	N/A			
990	Dirt (MW)	RFP	369, 413, 421, 803-Rev7, RAV	Butanol = Butyl Alcohol = C4H9OH	4			4	0	0	0.001	Organic solvents assumed to be present in trace quantities, similar to those for IDC 374. IDC 990 replaced by 374 in 1975.	F001-F004
990	Dirt (MW)	RFP	369, 413, 421, 803-Rev7, RAV	Carbon Tetrachloride = CCl4 = Tetrachloromethane	17			17	0	0	0.07	Characteristic: Toxic	
990	Dirt (MW)	RFP	CLM	Coveralls	101			101	0	0		Based on the waste description, combustible/flammable materials have been assumed to be minor components of the waste.	
990	Dirt (MW)	RFP	CLM	Dirt	0			0	0	0			
990	Dirt (MW)	RFP	CLM	Evaporator pond sludge	0			0	0	0			
990	Dirt (MW)	RFP	369, 413, 421, 803-Rev7, RAV	Freon = 1,1,2-Trichloro-1,2,2-Trifluoroethane	17			17	0	0	0.01	Characteristic: Toxic	
990	Dirt (MW)	RFP	CLM	Gloves	101			101	0	0			
990	Dirt (MW)	RFP	369, 413, 421, 803-Rev7, RAV	Methanol = Methyl Alcohol = CH3OH	4			4	0	0	0.001	Characteristic: Ignitable	
990	Dirt (MW)	RFP	369, 413, 421, 803-Rev7, RAV	Methylene Chloride = CH2Cl2 = Dichloromethane	17			17	0	0	0.005	Characteristic: Toxic	
990	Dirt (MW)	RFP	12, 369, 413, 803-Rev7, RAV	Nitrates	104			104	0	0		Oxidizer on organic soil would have already reacted. Not listed as D001 due to nitrates in EDF-803 or RPT-12.	
990	Dirt (MW)	RFP	369, 421, 803-Rev7, RAV	Nitrobenzene = C6H5NO2 = Nitrobenzol	27			27	0	0		Characteristic: Ignitable, Toxic	
990	Dirt (MW)	RFP	CLM	Oil-On	0			0	0	0			

980	Dirt (MW)	RFP	389, 413, 421, 803-Rev7, RAV	Perclene = Perchloroethylene = Tetrachloroethene, 1,1,2,2-	17			17	0	0		Characteristic: Toxic	
990	Dirt (MW)	RFP	389, 413, 421, 803-Rev7, RAV	Trichloroethane, 1,1,1- = TCA	17			17	0	0	0.02	Characteristic: Toxic	
990	Dirt (MW)	RFP	389, 413, 421, 803-Rev7, RAV	Trichloroethylene = Trichloroethene = TCE	17			17	0	0		Characteristic: Toxic	
980	Dirt (MW)	RFP	CLM	Waste Description: Dry dirt or soil generated from cleanup of spills, leaks, etc. May also include evaporator pond sludge. May also include some combustibles such as coveralls and gloves.	N/A	N/A	N/A	N/A	N/A	N/A		See also 090. Replaced by Code 374 in 1975.	
990	Dirt (MW)	RFP	389, 413, 421, 803-Rev7, RAV	Xylene = C6H4(CH3)2 = Dimethyl benzene	16			16	0	0	0.001	Characteristic: Ignitable	
995	Sludge (ROW)	RFP	389, 421, 803-Rev7	Waste Description: Mixed to dry sewer sludge from stabilization ponds at STP. Limited number of drums contain sludge generated by PRO.	None	None	None	None	None	None		ROW assumed to have no RCRA.	None

DIVIDER PAGE

AMWTP Advanced Mixed Waste Treatment Project

AK Source Document Review Summary

B-2013-0313
RECORD
JCOLLINS
07/23/2013

Form-1068, Rev. 4
Effective: 01/08/09
Page 1 of 1

Implementing Document: MP-TRUW-8.13

1. Source Document Tracking Number: C1306A	2. Revision: 0

3. Category

- ☐ Published Documentation
- ☐ Unpublished Documentation
- ☑ Correspondence
- ☐ Discrepancy

4. Title/Description Information: WASTE CHARACTERIZATION TIER 1 CHANGE REPORT:ADDITION OF CONTACT-HANDLED TRANSURANIC WASTE TO THE ADVANCED MIXED WASTE TREATMENT PROJECT APPROVED PROGRAM: PRE-1980 INL-EXHUMED SUBSURFACE DISPOSAL AREA
SUMMARY CATEGORY GROUP S3000 AND S5000 WASTE

Document Number: A-98-49; II-A4-174
Revision: 0
Author: EPA
Date: 05/01/2013

5. AK Element	6. Generator Or Waste Type(s)	7. Location in Source Doc.	8. AK Information Summary:
WM7, WM8	BN, SD	All	Tier 1 change report for RPT-TRUW-93 SDA exhumed wastes.

9. Document Summary:

This report supports EPA's approval of the proposed T1 changes which allows the AMWTP to treat (supercompact) and direct ship RPT-TRUW-91 SDA heterogenous debris waste (S5000) and homogeneous solids (S3000) wastes. This report serves as EPA's public notification of the approval of this T1 change.

The current copies of RPT-TRUW-91 and RPT-TRUW-83 are available on the AMWTP EDMS System.

10. Source Document Data Limitations (if any):

This approval is condiational on the submittal of the following required Tier 2 documents as noted in the above report: RPT-TRUW-06, Revision 15; RPT-TRUW-07, Revision 19; RPT-TRUW-12, Revision 20; RPT-TRUW-83, Revision 6; RPT-TRUW-91, Revision 1

11. AK Expert:	JOSEPH A. VELASQUEZ (Print)	(Sign)	7/15/2013 (Date)

DOCKET NO: A-98-49; II-A4-174

WASTE CHARACTERIZATION TIER 1 CHANGE REPORT:

ADDITION OF CONTACT-HANDLED TRANSURANIC WASTE TO THE ADVANCED MIXED WASTE TREATMENT PROJECT APPROVED PROGRAM: PRE-1980 INL-EXHUMED SUBSURFACE DISPOSAL AREA SUMMARY CATEGORY GROUP S3000 AND S5000 WASTE

MAY 2013

U.S. Environmental Protection Agency
Office of Radiation and Indoor Air
Center for Waste Management and Regulations
1200 Pennsylvania Avenue, NW
Washington, DC 20460

July 2013

TABLE OF CONTENTS

Section		Page
Abbreviations and Acronyms		iii
1.0	Introduction	1
2.0	Purpose of Tier 1 Evaluations	6
3.0	Purpose of This Report	6
4.0	Scope of This Tier 1 Evaluation	7
5.0	Tier 1 Evaluation Personnel	7
6.0	Technical Evaluation of Acceptable Knowledge and Load Management	7
6.1	Subsurface Disposal Area Waste-Generating Activities	7
6.2	Documents Provided	8
6.3	Waste Characterization Element Description	8
6.4	Technical Evaluation	9
7.0	Findings and Concerns	14
8.0	Conclusions	14

LIST OF TABLES

Table 1. Tiering of CH TRU Waste Characterization Processes Implemented by AMWTP 4
Table 2. Tier 1 Evaluation Personnel 7

ATTACHMENTS

Attachment A: Approval Summary for Advanced Mixed Waste Treatment Project Contact-Handled Waste Characterization Program
Attachment B: List of Documents Cited by EPA during the T1 Evaluation

ABBREVIATIONS AND ACRONYMS

AK	acceptable knowledge
AKD	AK document
AKSR	AK summary report
Am	americium
AMWTP	Advanced Mixed Waste Treatment Project
ANLE	Argonne National Laboratory-East
BDR	batch data report
CBFO	Carlsbad Field Office
CFR	Code of Federal Regulations
CH	contact-handled
CIS	characterization information summary
DCR	document change request
DOE	U.S. Department of Energy
EPA	U.S. Environmental Protection Agency
EWR	Early Waste Retrieval
HLW	high-level waste
IDC	item description code
IDR	Initial Drum Retrieval
INL	Idaho National Laboratory
INEL	Idaho National Engineering Laboratory
INEEL	Idaho National Engineering and Environmental Laboratory
ITG	Idaho Treatment Group, LLC
LWA	Land Withdrawal Act, as amended
MFC	Materials and Fuels Complex

nCi/g	nanocuries per gram
NDA	nondestructive assay
NDE	nondestructive examination
NWPA	Nuclear Waste Policy Act of 1982
PCB	polychlorinated biphenyl
Pu	plutonium
RFP	Rocky Flats Plant
RWMC	Radioactive Waste Management Complex
SCG	summary category group
SDA	Subsurface Disposal Area
SNF	spent nuclear fuel
T1	Tier 1
T2	Tier 2
TRU	transuranic
WAC	waste acceptance criteria
WAP	waste analysis plan
WIPP	Waste Isolation Pilot Plant
WMP	waste material parameter
WSPF	waste stream profile form

1.0 INTRODUCTION

This report supports the U.S. Environmental Protection Agency's (EPA's) approval of the proposed Tier 1 (T1) change to the EPA-approved transuranic (TRU) waste characterization program at the U.S. Department of Energy's (DOE's) Advanced Mixed Waste Treatment Project (AMWTP) at the Idaho National Laboratory (INL). This approval allows AMWTP to characterize pre-1980 INL-exhumed waste from two exhumations within the Subsurface Disposal Area (SDA) at INL: the Initial Drum Retrieval (IDR) and Early Waste Retrieval (EWR). This approval is for (a) direct shipment (waste in uncompacted containers) and supercompaction of containers with contact-handled (CH) debris [Summary Category Group (SCG) S5000] and (b) direct shipment of homogenous solid waste (SCG S3000). Both exhumations also generated soil (SCG S4000) during excavation, but DOE anticipates that this soil will not be TRU waste; therefore, this approval does not include S4000 waste.

In accordance with Title 40 of the Code of Federal Regulations (40 CFR) 194.8(b), EPA conducted Baseline Inspection No. EPA-AMWTP-03.06-8 of the waste characterization program at AMWTP on March 28–30 and April 11–13, 2006. EPA's October 2006 baseline approval applied to (a) CH retrievably-stored SCG S3000 and SCG S5000 waste and (b) newly-generated SCG S5000 CH waste. The AMWTP baseline final inspection report (see EPA Docket No. A-98-49; II-A4-66, dated October 2006) documents EPA's approval of the acceptable knowledge (AK) and load management processes and several nondestructive assay (NDA) and nondestructive examination (NDE) systems for use in characterizing CH retrievably stored SCG S3000 and SCG S5000 waste and newly generated SCG S5000 waste. The baseline report defined inclusion of wastes from sources other than Mound Site, Rocky Flats Environmental Technology Site [or the Rocky Flats Plant (RFP)], Battelle Columbus Laboratories, and Bettis Atomic Power Laboratory (hereafter referred to as "Bettis") as an AK T1 change that required EPA approval before implementation. Wastes from the DOE sites listed above were specifically evaluated as part of the baseline inspection. Attachment A provides a table listing EPA's approvals of the AMWTP CH TRU waste characterization program.

On February 20, 2013, the Carlsbad Field Office (CBFO) requested EPA's approval of the addition of pre-1980 INL-exhumed SDA CH waste from SCGs S3000 and S5000 to the AMWTP baseline approval as a T1 change. EPA limited the scope of this review to the AK and load management processes. The review was necessary to determine whether AMWTP's AK documentation and records adequately include and cross-reference available historical waste generation and disposal records supporting inclusion of two categories of pre-1980 waste from two pre-1980 waste exhumations from the SDA at INL.

This evaluation did not consider the following waste characterization activities:

- Use of EPA-approved NDA and NDE processes to characterize these wastes. Upon generating two to three NDA and NDE batch date reports (BDRs) for these waste containers, AMWTP must provide these BDRs at the end of the quarter along with the quarterly submission of Tier 2 (T2) changes. EPA has required submission of NDA and NDE BDRs for those CH TRU wastes that EPA approved as T1 approvals since the baseline approval of October 2006.

- AK procedural adequacy, AMWTP procedural compliance, or drum or data traceability. EPA evaluated these elements as part of AMWTP's continued compliance evaluation which occurred on October 30–November 1, 2012. (See EPA Docket No. A-98-49; II-A4-173).

EPA did not identify any findings or concerns during this review. Based on this evaluation, EPA approves the addition of the specified pre-1980 INL-exhumed SDA SCG S3000 and SCG S5000 CH waste to AMWTP's EPA-approved program.

EPA's evaluation required certain changes to RPT-TRUW-91, Revision 0, "Acceptable Knowledge Document for Pre-1980 INL-Exhumed SDA Waste" [hereafter referred to as the AK document (AKD)]. AMWTP provided a document change request (DCR) for the revised AKD to EPA before the conclusion of this T1 evaluation. **EPA expects final versions of the following documents to be submitted as part of AMWTP's next quarterly submission (no later than the fiscal year 2013 fourth quarter submission) of T2 changes to EPA for review and concurrence:**

- RPT-TRUW-06, Revision 15.
- RPT-TRUW-07, Revision 19.
- RPT-TRUW-12, Revision 20.
- RPT-TRUW-83, Revision 6.
- RPT-TRUW-91, Revision 1.

Based on this evaluation, there is one substantive change to the AK T1 designations: pre-1980 INL-exhumed SDA waste as defined in RPT-TRUW-91 has been added to the list of approved waste sources. There are two substantive changes to the AK T2 designations: (1) addition of AMWTP AK document RPT-TRUW-06 and supercompacted Waste Stream BN510.1 AK summary report (AKSR) RPT-TRUW-83 to the list of example AKSRs and generator-site-specific AK documents and (2) notification to EPA upon completion of or revision to any item description code (IDC) inclusion memoranda. EPA also revised the tiering table to ensure completeness and consistency with recent EPA T1 approval reports. Table 1 shows the substantive T1 and T2 changes in bold text. T1 and T2 changes that were initiated during the baseline and subsequent T1 approvals remain in effect. The language in Table 1 regarding AK documentation applies to all AMWTP waste streams, including load-managed and direct-shipped waste streams.

This approval allows AMWTP to characterize the physical and radiological contents of containers for the pre-1980 INL-exhumed SDA SCG S3000 and SCG S5000 CH waste using the equipment, processes and procedures EPA approved as part of the baseline approval (see EPA Docket No. A-98-49; II-A4-66, October 3, 2006). As stated above, EPA requires submission of NDA and NDE BDRs for the subject wastes along with the applicable quarterly T2 submissions. This is different from EPA's requirement that the NDA and NDE BDRs for ANLE and MFC wastes be provided prior to the first shipments of these wastes (see EPA Docket No. A-98-49; II-A4-169, January 29, 2013). This is due to EPA's determination, based on reviews conducted during EPA's Continued Compliance Inspection of February 2013 and review of the ANLE and MFC BDRs received in February 2013, that AMWTP can adequately prepare BN-510 BDRs recording the radiological and physical contents of waste containers managed by the site. EPA

also requires that if SNF or HLW is identified during characterization of the pre-1980 INL-exhumed SDA waste, AMWTP will immediately notify EPA and provide EPA with information describing management of the identified SNF or HLW.

This report serves as EPA's public notification of the approval of this T1 change. This information will be provided through the EPA website and by sending emails to the WIPPNEWS list, in accordance with 40 CFR 194.8(b)(3).

Table 1. Tiering of CH TRU Waste Characterization Processes Implemented by AMWTP (Based on March 28–30 and April 11–13, 2006, Baseline Inspection and Subsequent T1 Evaluations, Updated July 2013)

Process Elements	AMWTP CH Waste Characterization Processes – T1 Changes	AMWTP CH Waste Characterization Processes – T2 Changes*
Acceptable Knowledge, including Load Management	Any new waste category Any waste from sources other than the Mound Site, Rocky Flats Environmental Technology Site, Battelle Columbus Laboratories, Bettis Atomic Power Laboratory, Argonne National Laboratory-East, the Materials and Fuels Complex, **and pre-1980 INL-exhumed Subsurface Disposal Area waste** Load management of any new or unapproved waste stream	Notification to EPA upon completion of or substantive modification** to: • Implementation of procedures and related documentation that formalize NDA-AK communication requirements • AK accuracy reports (annually, at a minimum) • All final WSPFs with related attachments (e.g., CIS), including updates or additions to waste streams within approved SCGs and summaries of radiological data for those containers included on the CIS drum list • New and revised AKSRs and generator-site-specific AK documents (e.g., RPT-TRUW-79, RPT-TRUW-89, **RPT-TRUW-06, RPT-TRUW-83)** • **Item description code inclusion memoranda** • The load management status of approved waste streams • Site procedures requiring CBFO approval • Any waste identified outside of the waste profiles included in the 2002 Transuranic Waste Baseline Inventory Report, when applicable • RPT-TRUW-05, RPT-TRUW-07 and RPT-TRUW-12
Nondestructive Assay	New equipment or substantive physical modifications to approved equipment** Extension of or changes to the approved calibration range for approved equipment	Notification to EPA upon substantive modification** to: • Site procedures requiring CBFO approval • Software for approved equipment • Operating ranges upon CBFO approval
Real-Time Radiography	None	Notification to EPA upon: • Substantive modification** to site procedures requiring CBFO approval • New equipment or substantive physical modifications** to approved equipment
Visual Examination and Visual Examination Technique	Changes in the vendor performing visual examination or visual examination technique	Notification to EPA upon: • Substantive modification** to site procedures requiring CBFO approval • Addition of a new waste category • Addition of a new procedure or site equipment identifier
WIPP Waste Data System	Changes to Waste Data System algorithms specific to load management	Notification to EPA upon substantive modification** to: • Site procedures requiring CBFO approval • The load management status of approved waste streams

New T1s, T2s and significant modifications to existing T1s or T2s are in **bold** text; T1s or T2s that were only revised for style are not shown in bold.

* AMWTP will report all T2 changes to EPA every three months.

** "Substantive modification" refers to a change with the potential to affect AMWTP's CH waste characterization processes or documentation of them, excluding changes that are solely related to the environment, safety and health; nuclear safety; or the Resource Conservation and Recovery Act; or that are editorial in nature or are required to address administrative concerns. EPA may request copies of new references that DOE adds during a document revision.

2.0 PURPOSE OF TIER 1 EVALUATIONS

Certain changes to the waste characterization activities from the date of the site's baseline inspection must be reported to and, if applicable, approved by EPA according to the tiering requirements set forth in 40 CFR 194.8 and incorporated into the AMWTP CH baseline final report (see EPA Docket No. A-98-49; II-A4-66).

Under the changes to 40 CFR 194.8 promulgated in the July 16, 2004, Federal Register notice (Vol. 69, No. 136, pages 42571–42583), EPA must perform a single baseline inspection of a TRU waste generator site's waste characterization program. The purpose of EPA's baseline inspection is to approve the site's waste characterization program, based on the demonstration that the program's components, with applicable conditions and limitations, can adequately characterize TRU wastes and comply with the regulatory requirements imposed on TRU wastes destined for disposal at the Waste Isolation Pilot Plant (WIPP).

Following EPA's baseline approval, EPA is authorized to evaluate and approve changes, if necessary, to the site's approved waste characterization program by conducting additional inspections under the authority of 40 CFR 194.24(h). Changes requiring EPA notification and approval prior to implementation (T1 changes) and those requiring post-implementation notification (T2 changes) are identified in the site-specific baseline inspection reports. When evaluating proposed T1 changes for approval, EPA may conduct a site inspection to observe implementation of the change or can opt to conduct a desktop review of information provided specific to a change. DOE may choose to characterize and dispose of any previously approved TRU waste using processes, procedures or equipment implemented as T2 changes at risk of subsequent EPA disapproval. EPA reviews T2 changes on a quarterly basis and will conduct continued compliance inspections to evaluate implemented T2 changes to verify their adequacy.

3.0 PURPOSE OF THIS REPORT

This report presents the technical basis for and results of EPA's evaluation of the addition of SCG S3000 and SCG S5000 pre-1980 INL-exhumed SDA CH TRU waste to AMWTP's baseline approval as a T1 change. EPA's approval of pre-1980 INL-exhumed SDA SCG S3000 and SCG S5000 waste for characterization for emplacement at the WIPP has been conveyed to DOE separately by letter. EPA will also announce the decision on its website at www.epa.gov/radiation/wipp, in accordance with 40 CFR 194.8(b)(3).

DOE documents that EPA reviewed for this evaluation are cited in different sections throughout the report and are listed in Attachment B. Any of these documents can be requested from the following address:

Manager, National TRU Program
Carlsbad Field Office
U.S. Department of Energy
P O Box 3090
Carlsbad, NM 88221-3090

4.0 SCOPE OF THIS TIER 1 EVALUATION

The scope of this T1 evaluation was the addition of SCG S3000 and SCG S5000 pre-1980 INL-exhumed SDA CH waste to the AMWTP baseline approval as a T1 change. EPA determined the scope of its review in part based on the knowledge that AMWTP expects to supercompact all of the pre-1980 INL-exhumed SDA SCG S5000 waste and segregate most if not all of the SCG S3000 waste to existing RFP waste streams. EPA limited the scope of this review to the AK and load management processes to determine whether AMWTP's pre-1980 INL-exhumed SDA AKD and records are sufficient to support inclusion of the pre-1980 INL-exhumed SDA SCG S3000 and SCG S5000 waste in the approved program. This review did not address AK, NDA or NDE procedural adequacy, AMWTP procedural compliance, or NDA and NDE equipment because EPA evaluated these elements during its continued compliance evaluation of AMWTP on October 30–November 1, 2012, and February 26, 2013 (EPA Docket No. A-98-49; II-A4-173).

5.0 TIER 1 EVALUATION PERSONNEL

EPA and its support personnel conducted interviews with AMWTP personnel by telephone. Table 2 lists the EPA evaluation team members and the AMWTP personnel contacted, with their affiliations and function. This list includes personnel present at meetings conducted as part of this evaluation.

Table 2. Tier 1 Evaluation Personnel

Name	Affiliation & Function
Rajani Joglekar	Lead Inspector, EPA
Ed Feltcorn	Inspector, EPA
Connie Walker	Technical Evaluator – Acceptable Knowledge, SC&A
Patrick Kelly	Technical Evaluator – Acceptable Knowledge/Radiological, SC&A
Tim Venneman	Acceptable Knowledge Expert, AMWTP-ITG[1]
Steve Carpenter	Acceptable Knowledge Expert, AMWTP-ITG
George Byram	TRU Programs Manager, AMWTP-ITG

6.0 TECHNICAL EVALUATION OF ACCEPTABLE KNOWLEDGE AND LOAD MANAGEMENT

6.1 Subsurface Disposal Area Waste-Generating Activities

The SDA at INL was used from the mid-1950s to 1970 for disposal of waste from various DOE and non-DOE sites. Waste has been and is currently being retrieved from the SDA for subsequent storage and ultimate post-characterization shipment to WIPP. This T1 encompasses wastes exhumed from the INL SDA before 1980; specifically, drums from two retrieval activities: the 1974–1978 INL IDR project and the 1976–1978 INL EWR project. The IDR and EWR projects exhumed approximately 18,841 containers, including both 55-gallon and 30-gallon drums. The exhumed wastes were overpacked into cargo containers, fiberglass boxes, M-

[1] In October 2011, Idaho Treatment Group (ITG), a DOE CBFO contractor, took over AMWTP's TRU waste characterization program from the previous contractor.

III bins (Department of Transportation 7A steel bins) or 83- or 85-gallon drums. The containers were shipped to the Transuranic Storage Area-Retrieval Enclosure and placed into retrievable storage. The majority of containers were exhumed during the IDR project (18,024 containers), 91% of which were intact. Of the approximately 820 containers exhumed during the EWR project, approximately 30% were intact (References C1069A, P652S, P653S, P654S, P655S, P664A, P753A, P1404A, P1411S, P1412S, RPT-TRUW-05 and RPT-TRUW-91, Revision 1).

Waste from the IDR project originated from Pits 11 and 12, while EWR-project waste originated from Pits 1 and 2, Trenches 1, 5, 7 and 8, and possibly Pits 9 and 10. The AKD states that pits were predominantly used for the disposal of RFP waste, while trenches were used to dispose of INL-generated or non-RFP offsite waste. AMWTP representatives stated that they cannot verify with certainty the generator sites that contributed to the IDR- and EWR-project waste, although RFP is suspected to be the main contributor based on overall SDA information (References C842S, P443A, P647A, P758A, RPT-TRUW-07, Revision 19a, and RPT-TRUW-12, Revision 20C).

6.2 Documents Provided

EPA evaluated the AMWTP documentation that supported inclusion of the SCG S3000 and SCG S5000 pre-1980 INL-exhumed SDA CH waste in AMWTP's approved characterization program. Attachment B lists all documentation cited in this report.

6.3 Waste Characterization Element Description

EPA limited the scope of the T1 review to the following elements related to the use of AK for CH waste characterization:

- Waste identification and description, including radiological and physical characteristics and verification that the subject SCG S5000 waste is suitable for inclusion in supercompacted Waste Stream BN510.1.[2]
- Sufficiency of AK reports, including integration of source documents.
- Verification that the subject waste is of defense origin and is not high-level waste (HLW) or spent nuclear fuel (SNF).
- Load management.

[2] AMWTP intends to incorporate the pre-1980 INL-exhumed SDA SCG S5000 waste into supercompacted debris Waste Stream BN510.1 [see Item (1)] for shipment to the WIPP facility.

6.4 Technical Evaluation

(1) Information regarding the waste-generating processes and radiological and physical characteristics was evaluated to determine whether wastes were appropriately identified for future development of direct-ship waste streams and for inclusion of SCG S5000 waste in supercompacted Waste Stream BN510.1. Information evaluated was adequate for this purpose.

The pre-1980 INL-exhumed SDA waste was generated at several sites across the country and shipped to INL for disposal in the SDA, including in waste trenches and pits. Waste emplaced in Pits 1, 2, 11 and 12 and Trenches 1, 5, 7, 8, 9 and 10 include solid and debris waste. Soil waste was generated primarily through the removal of solid and debris waste, but AMWTP personnel stated that drums of soil from generator sites are also expected. AMWTP representatives stated that soil (SCG S4000) is not expected to be TRU waste, so EPA did not include SCG S4000 in this review.

The AKD, Revision 0, provided conflicting information about the percentage of waste in each SCG, but AMWTP representatives prepared a DCR to clarify that 60% of the waste is expected to be debris, 30% solids and the remaining 10% soils (References P847S, P1391A, P1392A and P1403S).

The AKD and references (e.g. References P443A, P647A, P758A and P847S) indicate that waste in the SDA as a whole is composed primarily of combustible and noncombustible debris, as well as a variety of materials including but not limited to metals, glass, decontamination material, electrical instruments, equipment, glovebox waste, graphite, filters and other debris. Waste may also include solids, such as RFP roaster oxide, soils and masonry, organic sludge (e.g., RFP Organic Setups [74A- and 743-series]) and reactor debris. Also, residues from recovery, sewage sludge, solidified and absorbed solutions and sources are expected (References P647A, P1403S and RPT-TRUW-91, Revision 1). AMWTP representatives stated that, although the AKD did not say so, AMWTP examined real-time radiography records for several IDR containers and determined that the physical composition of debris was consistent with the anticipated Waste Stream BN510.1 waste material parameter (WMP) ranges.

Detailed WMP percentages identifying the cellulose, plastic and rubber contents of waste containers are necessary to complete characterization. EPA, therefore, expects that future AKSRs for each direct shipped pre-1980 INL-exhumed SDA waste stream will include sufficiently detailed WMP percentages and distributions.

The original waste-generating processes are as varied as the sites generating the waste and include but are not limited to (References C842S, P443A, P647A, P758A, P847S, P1389A, P1390A, P1391A, P1392A and P1393A):

- Weapons production and support (e.g., RFP).
- Project Pluto (e.g., Coors Porcelain Company).
- Unspecified research (Colorado School of Mines).
- Non-DOE government operations.
- Uranium-233 recovery operations (Idaho Nuclear Technology and Engineering Center).

- Fuel examination and related activities (e.g., Naval Reactor Facility).
- INL research support (e.g., Test Area North).
- Decontamination and decommissioning (e.g., INL, sitewide).
- Test reactor support (Test Reactor Area, now the INL Reactor Technology Complex).
- Lawrence Berkeley Laboratory.
- U.S. Nuclear Regulatory Commission, San Francisco, originating from cleanup activities.

Waste placed in the SDA originated from several different processes, but the exhumation activities may comingle waste when containers are breached or compromised. Waste evaluation is ongoing, and AMWTP expects all debris to be transferred to Waste Stream BN510.1 and many of the SCG S3000 waste containers to be transferred to existing RFP S3000 waste streams. Consequently, process characteristics of pre-1980 INL-exhumed SDA direct-shipped waste cannot be ascertained at this time. EPA expects that future waste streams will be developed in accordance with the definition of "waste stream" presented in the WIPP waste analysis plan (WAP)[3] and waste acceptance criteria (WAC).[4]

AMWTP expects that, because waste from the EWR and IDR projects originated primarily from RFP, 95% of the activity will be from americium-241 (^{241}Am), plutonium-239 (^{239}Pu), ^{240}Pu and ^{241}Pu; the most prevalent radionuclides are expected to be ^{241}Pu and ^{241}Am. Because significant waste segregation is expected with respect to RFP solids and debris to be supercompacted, these estimates may not hold true when or if direct-shipped waste streams are identified. EPA expects that the radiological composition of direct-shipped waste streams will be evaluated in more detail when the waste streams are determined. The anticipated radiological composition of supercompacted waste fits within the radiological envelope identified in RPT-TRUW-83, Revision 3, "Acceptable Knowledge Summary for Supercompacted Debris Waste (BN510.1)."

AMWTP expects to supercompact all of the pre-1980 INL-exhumed SDA SCG S5000 waste and segregate most if not all of the SCG S3000 waste to existing RFP waste streams. If this is not possible, AMWTP may decide to direct ship pre-1980 INL-exhumed SDA SCG S3000 and SCG S5000 waste. EPA determined that AK information presented in reviewed documents is adequate to support the development of direct-shipped AKSRs and verified that the debris waste fit within the identified Waste Stream BN510.1 waste envelope. Notification to EPA upon completion of or revision to AKSRs and waste stream profile forms (WSPFs), including those for any direct-shipped waste streams, continues to be a T2 change (see Table 1). See Item (4) for additional requirements related to payload management of direct-shipped waste.

(2) The acceptable knowledge reports and related documentation were assessed and found to be adequate.

AMWTP prepares multiple documents that together summarize the available information for pre-1980 INL-exhumed SDA CH TRU waste. AMWTP's AK characterization process,

[3] New Mexico Environment Department, "Waste Isolation Pilot Plant Hazardous Waste Facility Permit," Waste Analysis Plan, Santa Fe, New Mexico, June 29, 2010.

[4] U.S. DOE CBFO, "Transuranic Waste Acceptance Criteria for the Waste Isolation Pilot Plant," DOE/WIPP-02-3122, Revision 7.2, Carlsbad, New Mexico, June 13, 2011.

procedure MP-TRUW-8.13, Revision 24,[5] states that the process begins with development of generator-site-specific AK documents. In the case of this T1 request, AMWTP prepared one AKD: RPT-TRUW-91, Revision 0, "Acceptable Knowledge Document for Pre-1980 INL-Exhumed SDA Waste." The AK document is very general and includes data from the entire SDA, not just the area from which the pre-1980 INL-exhumed SDA waste was extracted. EPA identified several issues associated with the AK document. Specifically, EPA identified errors in the number of waste containers listed under each SCG, the trenches that contributed waste to the EWR project, the justification for waste comingling based on lack of container integrity (i.e., since the majority of containers extracted are apparently intact), and other typographical and text clarifications related to packaging and management of EWR- and IDR-project wastes. On May 21, 2013, AMWTP provided EPA with a DCR and draft Revision 1 of the AK document that addressed these issues. EPA expects a fully approved revision of RPT-TRUW-91 (Revision 1) to be included in the next quarterly T2 report (no later than the fiscal year 2013 fourth quarter report).

According to procedure MP-TRUW-8.13, information from the generator-site-specific AK document is then used to update other AMWTP summary reports. AMWTP provided the following reports to EPA as evidence of this process:

- RPT-TRUW-05, Revision 31, "Waste Matrix Code Reference Manual."
- RPT-TRUW-07, draft Revision 19a, "Determination of Radioisotopic Content in TRU Waste Based on Acceptable Knowledge."
- RPT-TRUW-12, draft Revision 20C, "AMWTP Waste Stream Designations."

These reports plus their supporting source documents contain the information required by the WIPP WAC and WIPP WAP. AMWTP revised each document in whole or in part to address the pre-1980 INL-exhumed SDA waste, as discussed below. The waste stream definition and documentation of physical and radiological components are discussed further in Item (1) above. The defense origin of the waste and the absence of SNF and HLW are discussed further in Item (3) below.

The waste matrix code reference manual, RPT-TRUW-05, contains detailed information, listed by generator site IDC and WMC, about the physical characteristics of all waste that is handled by AMWTP, including low-level waste. RPT-TRUW-05 includes information for all the IDCs identified in the pre-1980 INL-exhumed SDA AK document. RPT-TRUW-05 is also the primary source of information about the prohibited-item content of each IDC, because the AK docuemnt (RPT-TRUW-91, Revision 1) does not include this information. RPT-TRUW-05 appropriately distinguishes between the EWR and IDR projects' waste packaging configurations (References P652S, P653S, P654S, P655S, P664A and P753A). EPA reviewed RPT-TRUW-05, Revision 31, and found that the report does not yet include information about primary WMPs. This lack of information corresponds with a similar lack of detail in the AK document. RPT-TRUW-05 must be updated to present the physical characteristics of each IDC in the pre-1980 INL-exhumed

[5] AMWTP, "Collection, Review, and Management of Acceptable Knowledge Documentation," MP-TRUW-8.13, Revision 24, Idaho Falls, Idaho, December 12, 2011.

SDA CH waste. Notification to EPA upon the availability of a revised RPT-TRUW-05 continues to be a T2 change (see Table 1).

RPT-TRUW-07 presents radiological information for EPA-approved waste sites, i.e. RFP, Mound Site, Battelle Columbus Laboratories, Bettis, the Hanford Site, and AMWTP supercompacted and newly generated (not supercompacted) wastes. RPT-TRUW-07, Revision 19a, includes Chapter 10 and Appendix H that address pre-1980 INL-exhumed SDA waste; AMWPT also revised parts of other sections and chapters to include pre-1980 INL-exhumed SDA waste. The pre-1980 INL-exhumed SDA radiological information presented in RPT-TRUW-07 is very general and reflects AMWTP's determination that the pre-1980 INL-exhumed SDA waste will be composed primarily of RFP waste. EPA pointed out that the report included typographical errors in the anticipated quantities of pre-1980 INL-exhumed SDA waste for each SCG. AMWTP did not provide a draft revision of RPT-TRUW-07 or a DCR to rectify SCG errors or clarify the anticipated radiological composition of the pre-1980 INL-exhumed SDA waste as a whole. EPA assumes that RPT-TRUW-07 will be further refined to better reflect the radiological and physical composition of the pre-1980 INL-exhumed SDA waste, particularly if pre-1980 INL-exhumed SDA wastes are singled out for direct shipment. Notification to EPA upon the availability of a revised RPT-TRUW-07 remains a T2 change (see Table 1). See Item (4) for additional information about payload management.

RPT-TRUW-12 is limited to descriptions of AMWTP-approved waste streams that originated at EPA-approved waste sites but are shipped to WIPP as AMWTP waste streams. RPT-TRUW-12 is typically used to identify the waste's hazardous constituents by IDC. AMWTP updated RPT-TRUW-12 (to draft Revision 20C) to include the chemical composition of pre-1980 INL-exhumed SDA waste as a whole for each SCG. The report also indicates that SDA waste can be subdivided into additional IDCs beyond those identified in the AK document (i.e., SDA wastes that are presumably not pre-1980 in origin are IDCs SD-704, -705 and -706). AMWTP representatives indicated that additional IDCs may be assigned to address, for example, polychlorinated biphenyl (PCB) versus non-PCB-bearing waste. RPT-TRUW-12, Revision 20C, adequately addresses SCG S5000 and SCG S3000 pre-1980 INL-exhumed SDA waste. Notification to EPA upon the availability of a revised RPT-TRUW-12 continues to be a T2 change (see Table 1).

Information about all AMWTP-generated waste, including supercompacted Waste Stream BN510.1, is presented in RPT-TRUW-06 (the AMWTP AK document). RPT-TRUW-83 (the Waste Stream BN510.1 AKSR) includes information about all feed material to the supercompacted waste stream. AMWTP did not provide updated versions of either RPT-TRUW-06 or RPT-TRUW-83 to EPA for review because edits to both documents were in progress at the time of this evaluation. EPA examined earlier versions of both documents (RPT-TRUW-06, Revision 14, and RPT-TRUW-83, Revision 3) to ensure that the proposed T1 pre-1980 INL-exhumed SDA waste fit within the Waste Stream BN510.1 envelope. Notification to EPA upon the availability of revised RPT-TRUW-06 and RPT-TRUW-83 remains a T2 change (see Table 1).

(3) The generator-site-specific acceptable knowledge document was examined and indicates that data are available to determine that the wastes are defense in origin and are not high-level waste or spent nuclear fuel.

TRU waste to be emplaced in the WIPP must be defense in origin. DOE guidance defines waste as defense in origin if it was generated in whole or part by one of the atomic energy defense activities listed in section 10101(3) of the Nuclear Waste Policy Act of 1982 (NWPA).[6] The WIPP Land Withdrawal Act (LWA), as amended,[7] prohibits the disposal of SNF and HLW as defined by the NWPA at the WIPP.

The AK document indicates that waste from several non-defense waste generators has been disposed of at the SDA. This waste when exhumed should not be comingled with defense TRU CH debris as direct-shipped or supercompacted containers for disposal at the WIPP. EPA expects AMWTP to ensure that only defense debris waste will be included in direct-shipped waste streams in accordance with DOE guidance (Reference C329A). When this occurs the disposition of segregated non-defense waste should be properly recorded in the AK as IDC memoranda.

Similarly, while HLW and SNF are not expected, historical AK documentation does indicate that fuel may have been disposed of in the SDA pits and trenches. For example, Reference C842S states that Experimental Breeder Reactor-1 Mark III Fuel may be in Idaho Chemical Processing Plant waste in SDA Pit 12. However, the AK document indicates that SNF was not included in the IDR- or EWR-project wastes that had been shipped to AMWTP for packaging as a WIPP compliant waste. If AMWTP does identify SNF or HLW during future waste management operations of pre-1980 INL-exhumed SDA waste, AMWTP will segregate and handle the SNF or HLW waste on a case-by-case basis and must manage it separately from defense TRU CH waste destined for WIPP. In such as event, AMWTP will immediately notify EPA and provide EPA with information describing management of the identified SNF or HLW.

As a result of an EPA concern identified during the 2012–2013 AMWTP continued compliance inspection (EPA Docket No. A-98-49; II-A4-173), AMWTP will prepare IDC inclusion memoranda documenting the evaluations performed on each new IDC to be included in Waste Stream BN510.1. These memoranda will document that the IDCs meet the requirements of the LWA restrictions with respect to non-defense waste, SNF and HLW. Notification to EPA upon completion of or revision to IDC inclusion memoranda is a new T2 change (see Table 1).

(4) Load management was found to be acceptable.

The WIPP WAC allows payload management in which a payload container may include drums that measure less than 100 nanocuries per gram (nCi/g) so long as the payload in total is greater than 100 nCi/g. The WAC defines a payload container as "the outermost container [(e.g., drum, Standard Large Box 2, standard waste box, 10-drum overpack, canister)] for TRU waste material that is placed in a reusable Type B shipping container (e.g., TRUPACT-II, TRUPACT-III,

[6] U.S. Code, Title 42, "The Public Health and Welfare," Chapter 108, "Nuclear Waste Policy Act of 1982."

[7] Public Law 102-579, The Waste Isolation Pilot Plant Land Withdrawal Act, October 30, 1992, as amended by Public Law 104-201, September 23, 1996.

HalfPACT, RH-TRU 72-B, or 10-160B) for transport." The AKSR for each waste stream selected for payload management must include an estimate of the total waste volume and percentage of the waste volume that is above and below 100 nCi/g. Each drum selected for payload management must also contain at least one TRU isotope whose activity exceeds the lower limit of detection of the radioassay system used to characterize the waste, and each drum may only be overpacked into a payload container with other containers from the same TRU waste stream.

AMWTP includes WAC payload documentation in RPT-TRUW-07 instead of in individual AKSRs. Supercompacted waste is payload managed because the 100-gallon drum in which supercompacted silver drums are placed is considered to be the payload container. Pre-1980 INL-exhumed SDA waste that is direct shipped from AMWTP may also be payload managed so long as the appropriate WAC requirements are met. AMWTP updated RPT-TRUW-07 (to Revision 19a) to include pre-1980 INL-exhumed SDA waste, but AMWTP needs to make additional changes to the estimated quantities for each SCG to incorporate the changes presented in RPT-TRUW-91, draft Revision 1. Notification to EPA upon availability of a revised RPT-TRUW-07 incorporating modifications to the quantities of pre-1980 INL-exhumed SDA waste remains a T2 change.

7.0 FINDINGS AND CONCERNS

The EPA inspection team did not identify any findings or concerns during this T1 evaluation. There are no open issues related to this T1 evaluation.

8.0 CONCLUSIONS

Changes to Tiering

Notification to EPA upon revision to AMWTP reports RPT-TRUW-05, RPT-TRUW-06, RPT-TRUW-07, RPT-TRUW-12 and RPT-TRUW-83 remains a T2 change. Table 1 was modified to update the list of approved waste sources to include pre-1980 INL-exhumed SDA waste, to explicitly list modifications to RPT-TRUW-06 and RPT-TRUW-83 as examples of T2 changes. Notification of any IDC inclusion memoranda associated with changes to RPT-TRUW-83 is a new T2 change. EPA also revised the tiering table to ensure completeness and consistency with recent EPA T1 approval reports. Table 1 shows the substantive T1 and T2 changes in bold text. T1 and T2 changes that were initiated during the baseline approval remain in effect; these are listed as applicable in section 6.0. The language in Table 1 regarding AK documentation applies to all AMWTP waste streams, including load-managed and direct-shipped waste streams.

Approval

This T1 change consisted of the use of AK to characterize pre-1980 INL-exhumed SDA SCG S3000 and SCG S5000 waste. With this approval of the AK aspect of the characterization process, AMWTP may characterize physical and radiological contents of these two waste types using the equipment, processes and procedures that EPA approved during the October 2006 baseline approval (see EPA Docket No A-98-49: II-A4-66, October 3, 2006). As stated above, EPA requires submission of NDA and NDE BDRs for the subject wastes along with the applicable quarterly T2 submissions. This is different from EPA's requirement that the NDA and

NDE BDRs for ANLE and MFC wastes be provided prior to the first shipments of these wastes (see EPA Docket No. A-98-49; II-A4-169, January 29, 2013). This is due to EPA's determination, based on reviews conducted during EPA's Continued Compliance Inspection of February 2013 and review of the ANLE and MFC BDRs received in February 2013, that AMWTP can adequately prepare BN-510 BDRs recording the radiological and physical contents of waste containers managed by the site. EPA also requires that if SNF or HLW is identified during characterization of the pre-1980 INL-exhumed SDA waste, AMWTP will immediately notify EPA and provide EPA with information describing management of the identified SNF or HLW.

ATTACHMENT A

APPROVAL SUMMARY FOR ADVANCED MIXED WASTE TREATMENT PROJECT CONTACT-HANDLED WASTE CHARACTERIZATION PROGRAM

Approved Activity	EPA Inspection Number, Approval Dates	EPA Docket Number
AMWTP CH Baseline Approval	EPA-AMWTP-03.06-8 October 2006	A-98-49; II-A4-66
T1 Change – Addition of Four Hanford Legacy Debris Waste Streams to the BN510 Super-Compacted Debris Waste Stream	June 2010	A-98-49; II-A4-127
Unannounced Continued Compliance Inspection	March 2011	A-98-49; II-A4-143
T1 Change – Addition of ANLE-generated SCG S3000 and S5000 CH Waste and MFC-generated SCG S5000 CH Waste	January 2013	A-98-49; II-A4-169
Continued Compliance Inspection	April 2013	A-98-49; II-A4-173

ATTACHMENT B

LIST OF DOCUMENTS CITED BY EPA DURING THE T1 EVALUATION

C329A, Correspondence from Frank Marcinowski to EM-13 (Stan Wolf, 301-903-7962), Process for TRU Waste Defense Determination, February 2005

C842S, Email correspondence, between Tim Venneman (AMWTP) and Kirk Green (ICP), Pits 11 and 12 disposals, October 20, 2009

C1069A, Estimated Waste Stream Volumes for Pre-1980 INL-Exhumed SDA wastes, TV-TV-002-12

P443A, Historical Background Report for Rocky Flats Plant Waste Shipped to the INEEL and Buried in the SDA from 1954 to 1971, North Wind, Inc. TRU Program Technical Services, ICP/EXT-04-00248, Revision 1, March 2005

P647A, Central Characterization Project Acceptable Knowledge Summary Report for Waste Retrieved from Designated Areas within the Subsurface Disposal Area at the Idaho National Laboratory, CCP-AK-INL-001, ICP/EXT-06-01203, Revision 2

P652S, Initial Drum Retrieval Final Report, EG&G Idaho, Kirk B. McKinley and Joseph D. McKinney, TREE-1286, August 1978

P653S, Initial Drum Retrieval Interim Report, EG&G Idaho, D.H. Card and D.K. Wang, TREE-1079, May 1977

P654S, Early Waste Retrieval Final Report, EG&G Idaho, James R. Bishoff and Robert J. Hudson, TREE-1321, August 1979

P655S, Containment of Transuranic Contamination at the Early Waste Retrieval Project, Joseph L. Harness and Joseph D. McKinney, TREE-1061, January 1977

P664A, Early Waste Retrieval Interim Report, EG&G Idaho, D.H. Card, Manager, Retrieval Operations, TREE-1047, February 1977

P753A, Early Waste Retrieval Interim Report, EG&G Idaho, Kirk B. McKinley and Joseph D. McKinney, TREE-1265, May 1978

P758A, Solid Radioactive Waste Retrieval Test, R.J. Thompson, Allied Chemical Corporation, Idaho Chemical Programs, Operations Office, National Reactor Testing Station, ACI-120, May 1972

P847S, Subsurface Disposal Area (SDA) Waste Identification (1952–1970 Emphasis), M.J. Vigil, INEL Environmental Restoration Program, EGG-WM-8727, Revision 2, January 24, 1990

P1389A, A Comprehensive Inventory of Radiological and Nonradiological Contaminants in Waste Buried in the Subsurface Disposal Area of the INEL RWMC During the Years 1952–1983, Volume 1, INEL-95/0310 (Formerly EGG-WM-10903), Revision 1, August 1995

P1390A, A Comprehensive Inventory of Radiological and Nonradiological Contaminants in Waste Buried in the Subsurface Disposal Area of the INEL RWMC During the Years 1952–1983, Volume 2, INEL-95/0310 (Formerly EGG-WM-10903), Revision 1, August 1995

P1391A, A Comprehensive Inventory of Radiological and Nonradiological Contaminants in Waste Buried in the Subsurface Disposal Area of the INEL RWMC During the Years 1952–1983, Volume 3, INEL-95/0310 (Formerly EGG-WM-10903), Revision 1, August 1995

P1392A, A Comprehensive Inventory of Radiological and Nonradiological Contaminants in Waste Buried in the Subsurface Disposal Area of the INEL RWMC During the Years 1952–1983, Volume 4, INEL-95/0310 (Formerly EGG-WM-10903), Revision 1, August 1995

P1393A, A Comprehensive Inventory of Radiological and Nonradiological Contaminants in Waste Buried in the Subsurface Disposal Area of the INEL RWMC During the Years 1952–1983, Volume 5, INEL-95/0310 (Formerly EGG-WM-10903), Revision 1, August 1995

P1403S, A Brief Analysis and Description of Transuranic Wastes in the Subsurface Disposal Area of the Radioactive Waste Management Complex at INEL, D.A. Arrenholz and J.L. Knight, EGG-WTD-9438, Revision 1, November 22, 1991

P1404A, Management of Transuranic Contaminated Material, U.S. Department of Energy, DOE O 5820.1, 1982

P1411S, Overview of an Integrated Comprehensive Environmental Response, Compensation and Liability Act Evaluation of the Subsurface Disposal Area at the Idaho National Engineering and Environmental Laboratory, K.J. Holdren, August 4, 2002

P1412S, Radioactive Waste Management Complex Investigation Report, Volumes 1 through 4, M.L. Paarmann, EGG-WM-9707, December 1991

Document Change Request for RPT-TRUW-91, Revision 0, Advanced Mixed Waste Treatment Project, DCR-12333, provided to EPA May 21, 2013

RPT-TRUW-05, Waste Matrix Code Reference Manual, Advanced Mixed Waste Treatment Project, Revision 31, January 31, 2013

RPT-TRUW-06, Acceptable Knowledge Baseline Document for AMWTP Waste, Revision 14, July 5, 2012

RPT-TRUW-07, Determination of Radioisotopic Content in TRU Waste Based on Acceptable Knowledge, Advanced Mixed Waste Treatment Project, Revision 18, March 19, 2013, Revision 19a, draft provided to EPA May 1, 2013

RPT-TRUW-12, AMWTP Waste Stream Designations, Advanced Mixed Waste Treatment Project, Revision 19, November 13, 2012, Revision 20C, draft provided to EPA May 1, 2013

RPT-TRUW-83, Acceptable Knowledge Summary for Supercompacted Debris Waste (BN510.1), Advanced Mixed Waste Treatment Project, Revision 3, September 17, 2012

RPT-TRUW-91, Acceptable Knowledge Document for Pre-1980 INL-Exhumed SDA Waste, Revision 0, February 14, 2013, Revision 1, draft provided to EPA May 21, 2013

B-2011-0185

RECORD

AK8

AMWTP Advanced Mixed Waste Treatment Project	CC 7/27/2011 **AK Source Document Review Summary**	Form-1068, Rev. 4 Effective: 01/08/09 Page 1 of 1

Implementing Document: MP-TRUW-8.13

1. **Source Document Tracking Number:** P881S	2. **Revision:** 2

3. **Category**

- [x] Published Documentation
- [ ] Unpublished Documentation
- [ ] Correspondence
- [ ] Discrepancy

4. **Title/Description Information:** MSDS -- Fluid Tech, Aquaset (sodium montmorillonite) and Aquaset II-G (sepiolite)

Document Number: N/A
Revision: N/A
Author: Fluid Tech, Inc.
Date: 01/01/2005

5. AK Element	6. Generator Or Waste Type(s)	7. Location in Source Doc.	8. AK Information Summary:
WS5	AW-160, AW-161, AW-162, AW-163, AW-167, BN-600	1-2	Absorbent
WS5	BN-507, BN-515, BN-600, MD-834, MD-835, MD-836, RF-001, RF-002, RF-004, RF-292, RF-696, RF-741, RF-742, RF-744, RF-800, RF-802, RF-803, RF-807, RF-818, RF-820, RF-822	3-12	Aquaset and Aquaset II-G were used during treatment of aqueous liquids.

9. **Document Summary:**

MSDS for Aquaset absorbent used during waste packaging to absorb incidental liquids at MFC and by 3,100 m3 Project. Aquaset was also used by AMWTP prior to using Aquaset II-G.
MSDS for Aquaset II-G granular absorbent used for treatment of excess liquid in waste containers by AMWTP.

10. **Source Document Data Limitations (if any):**

None

11. AK Expert:	Lloyd Gouldthorpe		6/15/2011
	Print	Sign	Date

FLUID TECH®

A Division of
IMPACT Services, Inc.

RECORD 8/13/09

MATERIAL SAFETY DATA SHEET #513

BJJ 8-12-09

Identity: AQUASET II-G

SECTION I

Manufacturer's Name
Fluid Tech

Address
2865 S. Jones Blvd.
Suite # 200
Las Vegas, NV 89146

Telephone Number
Information: 702-871-1884
Emergency: 702-871-1884

Date Revised
11/01/08

SECTION II - Hazardous Ingredients/Identity Information

Hazardous Components: Respirable dust may contain Silica, Crystalline Quartz (CAS #14808-60-7).

Specific Chemical Identity:

Sepiolite ($H_6 Mg_8 Si_{12} O_{30}[OH]_{10}) \cdot 6 H_2O$) CAS #63800-37-3

Common Names: Sepiolite, Meerschaum, Palygorskite, Clay-a natural mineral extracted from the earth

OSHA PEL: Classified as a nuisance dust when less than 1% crystalline silica is present, PEL=5.00mg/M^3 (respirable)

If greater than 1% crystalline silica, then exposures shall not exceed an 8-hour time-weighted average limit as stated in 29 CFR § 1910.1000 Table Z-1-A for air contaminants, specifically;

Silica, Crystalline Quartz (respirable) 0.1 mg/M^3

ACGHIH TLV: Classified as a nuisance dust when less than 1% crystalline silica, TLV-TWA=10 mg/M^3 (Total dust), 5 mg/M^3 (Respirable)

If greater than 1% crystalline silica, the TLV-TWA = 0.1 mg/M^3 (respirable crystalline quartz). See Threshold Limit Value and Biological Exposure Indices for 1991-1992, American Conference of Governmental Industrial Hygienists.

Other Limits Recommended: National Institute for Occupational Safety and Health (NIOSH). Recommended standard maximum permissible concentration = 0.05 mg/M^3 (respirable crystalline quartz) as determined by a full shift sample up to 10-hour working day, 40-hour work week. See NIOSH Criteria for a Recommended Standard Occupational Exposure to Crystalline Silica).

SECTION III - Physical/Chemical Characteristics

Boiling Point: More than 1000^0F

Bulk Density : 50lbs/ft^3

Vapor Pressure (mm Hg): None

Melting Point: None

Vapor Density (AIR = 1): N/A

Evaporation Rate: None

Solubility in Water: Insoluble in water.

Appearance and Odor: Light gray to tan granules.

SECTION IV - Fire and Explosion Hazard Data

Flash Point (Method Used): Non-flammable

Flammable Limits: None **LEL:** None **UEL:** None

Extinguishing Media: None required

Special Fire Fighting Procedures: None

Unusual Fire and Explosion Hazards: None

SECTION V - Reactivity Data

Stability: **Stable**

Conditions to Avoid: None

Incompatibility (Materials to Avoid): None

Hazardous Decomposition or Byproducts: None

Hazardous Polymerization: **Will Not Occur**

Conditions to Avoid: None

SECTION VI - Health Hazard Data

Route(s) of Entry: **Inhalation?** Yes **Skin?** No **Ingestion?** No

Health Hazards (Acute and Chronic): May be harmful if inhaled in sufficient quantities. Prolonged exposure to Sepiolite Clay dust may cause a relatively benign lung disease, though there is a risk of the development of massive fibrosis. Repeated and prolonged exposure to respirable crystalline quartz which may be contained in Sepiolite Clay dust may cause delayed (chronic) lung injury (silicosis). Silicosis is a form of disabling pulmonary fibrosis which can be progressive and may lead to death.

Carcinogenicity: **NTP?** Yes **IARC Monographs?** Yes **OSHA Regulated?** Yes

IARC has reported that there is inadequate evidence for the carcinogenicity of Sepiolite in experimental animals and that there is no data available to evaluate the carcinogenicity of Sepiolite in humans (IARC Class 3).

Sepiolite Clay, like other naturally occurring minerals, may contain crystalline silica. IARC has concluded that there is limited evidence for the carcinogenicity of crystalline silica to humans and sufficient evidence for the carcinogenicity of crystalline silica to experimental animals (IARC Class 2A). The NTP has concluded that "silica, crystalline (respirable)" may reasonably be anticipated to be a carcinogen, based on sufficient evidence for the

carcinogenicity of respirable crystalline silica in experimental animals and limited evidence in humans.
Signs and Symptoms of Exposure: Undue breathlessness, wheezing, cough and sputum production.

Medical Conditions Generally Aggravated by Exposure: Pulmonary function may be reduced by inhalation of respirable crystalline silica that may be in Sepiolite dust. Lung scarring produced by such inhalation may lead to a progressive massive fibrosis of the lung which may aggravate other pulmonary conditions and diseases and which increases susceptibility to pulmonary tuberculosis. Progressive massive fibrosis may be accompanied by right heart enlargement, heart failure and pulmonary failure. Smoking aggravates the effects of exposure.

Emergency and First Aid Procedures: For dust in eyes, wash immediately with water. If irritation persists, seek medical attention. For gross inhalation, remove person immediately to fresh air, give artificial respiration as needed, seek medical attention as needed.

SECTION VII - Precautions for Safe Handling and Use

Waste Disposal Method: Dispose in accordance with Federal, State and Local regulations.

Precautions to be Taken in Handling and Storing: Avoid breakage of bagged material or spills of bulk material. See control measures in Section VIII.

Other Precautions: Use dustless systems for handling, storage, and clean up so that airborne dust does not exceed the PEL. Use adequate ventilation and dust collection. Practice good housekeeping. Do not permit dust to collect on walls, floors, sills, ledges, machinery or equipment. Maintain, clean and fit test respirators in accordance with OSHA regulations. Maintain and test ventilation and dust collection equipment. Wash or vacuum clothing which has become dusty. See also control measures in Section VIII.

See OSHA Hazard Communication Rule 29 CFR Sections 1910.1200, 1915.99, 1917.28, 1918.90, 1926.59 and 1928.21 and state and local worker or community "right to know laws and regulations. We recommend that smoking be prohibited in all areas where respirators must be used. WARN YOUR EMPLOYEES (AND YOUR CUSTOMERS – USERS IN CASE OF RESALE) BY POSTING AND OTHER MEANS OF THE HAZARDS AND OSHA PRECAUTIONS TO BE USED. PROVIDE TRAINING FOR YOUR EMPLOYEES ABOUT THE OSHA PRECAUTIONS.

See also American Society for Testing and Materials (ASTM) standard practice E 1132-86, "Standard Practice for Health Requirements Relating to Occupational Exposure to Quartz Dust.

SECTION VIII - Control Measures

Respiratory Protection (Specify Type):

The following chart specifies the type of respirators, which may provide respiratory protection for respirable crystalline silica that may be contained in Sepiolite Clay dust.

RESPIRATORY PROTECTION FOR CRYSTALLINE SILICA

Condition Particulate Concentration	MINIMUM RESPIRATORY PROTECTION*
Up to 5 X PEL	Any dust respirator
Up to 10 X PEL	Any dust respirator, except single-use or quarter-mask respirator. Any fume respirator of high efficiency particulate filter respirator. Any supplied-air respirator. Any self-contained breathing apparatus.
Up to 50 X PEL	A high efficiency particulate filter respirator with a full facepiece. Any supplied-air respirator with a full facepiece, helmet or hood. Any self-contained breathing apparatus with a full facepiece.
UP to 500 X PEL	A powered air-purifiying respirator with a high efficiency particulate filter. A Type C supplied air respirator operated in pressure-demand or other positive pressure or continuous-flow mode.
Greater than 500 X PEL or entry and escape from unknown concentrations.	Self-contained breathing apparatus with a full facepiece operated in pressure-demand or other positive pressure mode. A combination respirator which includes a Type C supplied-air respirator with a facepiece operated in pressure-demand or other positive pressure continuous-flow mode and an auxiliary self-contained breathing apparatus operated in pressure-demand or other positive pressure mode.

Ventilation:

Local Exhaust Use sufficient local exhaust to reduce the level of dust to the PEL. See ACGIH "Industrial Ventilation, A Manual of Recommended Practice, "the latest edition.

Mechanical: See "Other Precautions" under Section VII.

Special: See "Other Precautions" under Section VII.

Other: See "Other Precautions" under Section VII.

Protective Gloves: Optional.

Eye Protection: Wear protective shield (safety glasses) when exposed to dust particles.

Other Protective Clothing and Equipment: Optional

Work/Hygienic Practices: Avoid creating and breathing dust. See "Other Precautions" under Section VII.

The information and recommendations contained herein are based upon data believed to be correct. However, no guarantee or warranty to any kind, express or implied is made with respect to the information contained herein. We accept no responsibility and disclaim all liability for any harmful health effects which may be caused by purchase, resale use or exposure to our Sepiolite clay. Customers-users of Sepiolite clay must comply with all applicable health and safety laws, regulations and orders.

MSDS-513

DB 1-19-04
Record

FLUID TECH, INC.

HAZCO DIVISION

5720 S. Arville Street, Suite 104 • Las Vegas, NV 89118
Telephone: 702-871-1884 • Fax: 702-871-3629
E-mail: fluidtech@fluid-tech-inc.com
Visit Our Website: www.fluid-tech-inc.com

Corrected on 8/13/04 KS

MATERIAL SAFETY DATA SHEET

Identity: AQUASET II-G

SECTION I

Manufacturer's Name
Fluid Tech, Inc.

Address
5720 S. Arville St., Suite 104
Las Vegas, NV 89118

Emergency Telephone Number
702-871-1884

Telephone Number for Information
702-871-1884

Date Prepared 4/12/88
Date Revised 8/01/01

SECTION II - Hazardous Ingredients/Identity Information

Hazardous Components (Specific Chemical Identity; Common Name(s)): Mineral dusts including low concentrations of crystalline silica.

OSHA PEL: Total Dust - 15 mg/m^3 Respirable Dust - 5 mg/m^{3*}

ACGIH TLV: Total Dust - 10 mg/m^3 Respirable Dust - 5 mg/m^{3*}

*From 1986 ACGIH Hand Book as inert nuisance dust.

Other Limits Recommended: N/A

% (Optional): N/A

SECTION III - Physical/Chemical Characteristics

Boiling Point: N/A

Specific Gravity (H_2)=1): Bulk Density 45#/ft^3

Vapor Pressure (mm Hg): N/A

Melting Point: Approx. 1400° C

Vapor Density (AIR = 1): N/A

Evaporation Rate: N/A
(Butyl Acetate = 1)

Solubility in Water: Insoluble.

Appearance and Odor: Light gray to tan granules.

1 of 3

SECTION IV - Fire and Explosion Hazard Data

Flash Point (Method Used): N/A

Flammable Limits: N/A **LEL:** N/A* **UEL:** N/A

Extinguishing Media: N/A

Special Fire Fighting Procedures: N/A

Unusual Fire and Explosion Hazards: N/A

Corrected on 8/13/09 JEK

SECTION V - Reactivity Data

Stability: **Unstable** ( ) **Stable** (X) **Conditions to Avoid:** None

Incompatibility (Materials to Avoid): Hydrofluoric Acid

Hazardous Decomposition or Byproducts: None

Hazardous Polymerization: **May Occur** **Will Not Occur** X **Conditions to Avoid:** None

SECTION IV - Health Hazard Data

Route(s) of Entry: **Inhalation?** Yes **Skin?** No **Ingestion?** No

Health Hazards (Acute and Chronic): Acute (Short Term Exposure) - Cough if exposed to dust levels higher than TLV's. Chronic (Long Term Exposure) - May lead to development of silicosis if constantly exposed to dust levels higher than TLV's.

Carcinogenicity: **NTP?** Not listed. **IARC Monographs?** Not listed. **OSHA Regulated?** No

Signs and Symptoms of Exposure: Long term exposure to dust in excess of TLV's may lead to silicosis.

Medical Conditions Generally Aggravated by Exposure: Any respiratory illness.

Emergency and First Aid Procedures: Remove affected personnel from dusty area to clean air.

SECTION VII - Precautions for Safe Handling and Use

Steps to be Taken In Case Material Is Released or Spilled: Avoid breathing dust, use respirator approved for silica-bearing dust. Vacuum or sweep-up dust.

Waste Disposal Method: Dispose of in sanitary landfill.

Precautions to be Taken In Handling and Storing: Use NIOSH MSHA approved respirators for silica-bearing dust when dust levels exceed TLV's.

Other Precautions: Wet down on floors, material will become slippery.

SECTION VIII - Control Measures

Respiratory Protection (Specify Type): NIOSH MSHA approved for silica-bearing dusts.

Ventilation: **Local Exhaust:** Yes, if practical. **Mechanical (General):** N/A

Special: None **Other:** N/A

Protective Gloves: Not necessary. **Eye Protection:** Safety glasses.

Other Protective Clothing or Equipment: None

Work/Hygienic Practices: Good housekeeping as for any inert dusty material.

Corrected on 8/13/09 YK

Record

06 12-9-03

MSDS-513

MATERIAL SAFETY DATA SHEET

Identity: AQUASET II-G

Corrected on 6/13/07 jsk

SECTION I

Manufacturer's Name
Fluid Tech, Inc.

Address
5720 S. Arville St., Suite 104
Las Vegas, NV 89118

Emergency Telephone Number
702-871-1884

Telephone Number for Information
702-871-1884

Date Prepared
4/12/88

Date Revised
6/8/98

SECTION II - Hazardous Ingredients/Identity Information

Hazardous Components (Specific Chemical Identity; Common Name(s)): Mineral dusts including low concentrations of crystalline silica.

OSHA PEL: Total Dust - 15 mg/m^3 Respirable Dust - 5 mg/m^{3*}

ACGIH TLV: Total Dust - 10 mg/m^3 Respirable Dust - 5 mg/m^{3*}

*From 1986 ACGIH Hand Book as inert nuisance dust.

Other Limits Recommended: N/A

% (Optional): N/A

SECTION III - Physical/Chemical Characteristics

Boiling Point: N/A

Specific Gravity (H_2)=1): Bulk Density 65#/ft^3

Vapor Pressure (mm Hg): N/A

Melting Point: Approx. 1400° C

Vapor Density (AIR = 1): N/A

Evaporation Rate: N/A
(Butyl Acetate = 1)

Solubility in Water: Insoluble.

Appearance and Odor: Light gray to tan granules.

SECTION IV - Fire and Explosion Hazard Data

Flash Point (Method Used): N/A

Flammable Limits: N/A **LEL:** N/A* **UEL:** N/A

Extinguishing Media: N/A

Special Fire Fighting Procedures: N/A

Unusual Fire and Explosion Hazards: N/A

Corrected on 8/13/09 jm

SECTION V - Reactivity Data

Stability: **Unstable** ( ) **Stable** (X) **Conditions to Avoid:** None

Incompatibility (Materials to Avoid): Hydrofluoric Acid

Hazardous Decomposition or Byproducts: None

Hazardous Polymerization: **May Occur** **Will Not Occur** X **Conditions to Avoid:** None

SECTION IV - Health Hazard Data

Route(s) of Entry: **Inhalation?** Yes **Skin?** No **Ingestion?** No

Health Hazards (Acute and Chronic): Acute (Short Term Exposure) - Cough if exposed to dust levels higher than TLV's. Chronic (Long Term Exposure) - May lead to development of silicosis if constantly exposed to dust levels higher than TLV's.

Carcinogenicity: **NTP?** Not listed. **IARC Monographs?** Not listed. **OSHA Regulated?** No

Signs and Symptoms of Exposure: Long term exposure to dust in excess of TLV's may lead to silicosis.

Medical Conditions Generally Aggravated by Exposure: Any respiratory illness.

Emergency and First Aid Procedures: Remove affected personnel from dusty area to clean air.

SECTION VII - Precautions for Safe Handling and Use

Steps to be Taken in Case Material is Released or Spilled: Avoid breathing dust, use respirator approved for silica-bearing dust. Vacuum or sweep-up dust.

Waste Disposal Method: Dispose of in sanitary landfill.

Precautions to be Taken in Handling and Storing: Use NIOSH MSHA approved respirators for silica-bearing dust when dust levels exceed TLV's.

Other Precautions: If wet down on floors, material will become slippery.

SECTION VIII - Control Measures

Respiratory Protection (Specify Type): NIOSH MSHA approved for silica-bearing dusts.

Ventilation: **Local Exhaust:** Yes, if practical. **Mechanical (General):** N/A

Special: None **Other:** N/A

Protective Gloves: Not necessary. **Eye Protection:** Safety glasses.

Other Protective Clothing or Equipment: None

Work/Hygienic Practices: Good housekeeping as for any inert dusty material.

Corrected on 8/13/09 JSK

MATERIAL SAFETY DATA SHEET

I. PRODUCT IDENTIFICATION		Revised 1-1-05
Trade Name(s):	AQUASET	
Chemical Name(s):	Sodium Montmorillonite (CAS No. 1318-93-0)	
Manufacturer: Fluid Tech, Inc. Address: 5720 S. Arville St., Suite 104 Las Vegas, NV 89118	Telephone Numbers: Information: 702-871-1884 Emergency: 702-871-1884	

II. HAZARDOUS INGREDIENTS			
Ingredient	CAS No.	%	Hazard
Crystalline Silica (SiO_2) as Quartz	14808-60-7	See Note	Low concentrations of crystalline silica (SiO_2) in the form of quartz may be present in airborne bentonite dust. See Section VI for discussion of health hazard

Note: Although the typical quartz content of AQUASET is in the range of 2 to 6% most of the quartz particles are larger than the 10 μ respirable threshold size. The actual respirable quartz concentration in airborne bentonite dust will depend upon bentonite source, fineness of product, moisture content of product, local humidity and wind condition at point of use and other use specific factors.

III. PHYSICAL DATA	
Boiling Point (°F): NA	Specific Gravity (H_2O=1): Bulk Density 72#/ft^3
Vapor Pressure (mm. Hg): NA	Melting Point: Approx. 1450°C
Vapor Density (Air=1): NA	Evaporation Rate (Butyl Acetate=1): NA
Solubility in Water: Insoluble	Appearance and Odor: Light tan to gray granules. No odor.

IV. FIRE AND EXPLOSION DATA	
Flash Point: NA	Special Fire Fighting Procedures: NA
Flammable Limits: LEL: NA UEL: NA	Unusual Fire and Explosion Hazards: None. Product will not support combustion.
Extinguishing Media: None for product. Any media can be used for the packaging. Product becomes slippery when wet.	

V. REACTIVITY	
Stability: Stable	Hazardous Polymerization: None
Incompatibility: None	Hazardous Decomposition Products: None

NA = Not Applicable ND = Not Determined

VI. HEALTH HAZARD INFORMATION

Routes of Exposure and Effects:

Skin: Possible drying resulting in dermatitis.

Eyes: Mechanical irritant.

Inhalation: Acute (short term) exposure to dust levels exceeding the PEL may cause irritation of respiratory tract resulting in a dry cough.
Chronic (long-term) exposure to airborne bentonite dust containing respirable size (≤10μ) quartz particles, where respirable quartz particle levels are higher than TLV's, may lead to development of silicosis or other respiratory problems. Persistent dry cough and labored breathing upon exertion may be symptomatic.

Ingestion: No adverse effects.

Permissible Exposure Limits (for air contaminants) Bentonite as "Particulates not otherwise regulated" (formerly nuisance dust)	OSHA PEL (8 hr. TWA)	ACGIH TLV
Total Dust	15mg/m^3	ND
Respirable Dust	5mg/m^3	ND
Crystalline Quartz (respirable)	0.1mg/m^3	0.1mg/m^3

Carcinogenicity: Bentonite is not listed by NTP, IARC or OSHA. IARC, 1997, concludes that there is sufficient evidence suggesting the carcinogenicity in humans of inhaled crystalline silica from occupational sources (IARC Class 1).

Acute Oral LD_{50}: ND	Acute Dermal LD_{50}: ND	Aquatic Toxicology LC_{50}: ND

Emergency and First Aid Procedures:

Skin:	Eyes:	Inhalation:
Wash with soap and water until clean.	Flush with water until irritation ceases.	Move to area free from dust. If symptoms of irritation persist contact physician. Inhalation may aggravate existing respiratory illness.

VII. HANDLING AND USE PRECAUTIONS

Steps to be Taken if Material is Released or Spilled: Avoid breathing dust; wear respirator approved for silica bearing dust. Vacuum up to avoid generating airborne dust. Avoid using water. Product slippery when wetted.

Waste Disposal Methods: Product should be disposed of in accordance with applicable local, state and federal regulations.

Handling and Storage Precautions: Use NIOSH/MSHA respirators approved for silica bearing dust when free silica containing airborne bentonite dust levels exceed PEL/TLV. Clean up spills promptly to avoid making dust. Storage area floors may become slippery when wetted.

VII. INDUSTRIAL HYGIENE CONTROL MEASURES

Ventilation Requirements:	Respirator:
Mechanical, general room ventilation. Use local ventilation to maintain PEL's/TLV's.	Use respirators approved by NIOSH/MSHA for silica bearing dust.

Eye Protection:	Gloves:	Other Protective Clothing or Equipment:
Generally not necessary. Personal preference.	Generally not necessary. Personal preference	None.

IX. SPECIAL PRECAUTIONS

Avoid prolonged inhalation of airborne dust.

NA = Not Applicable ND = Not Determined

DIVIDER

PAGE

B-2011-0185

RECORD

CC 7/27/2011

AMWTP Advanced Mixed Waste Treatment Project	AK Source Document Review Summary	Form-1068, Rev. 4 Effective: 01/08/09 Page 1 of 2

Implementing Document: MP-TRUW-8.13

1. Source Document Tracking Number: P808S	2. Revision: 1

3. Category

- [x] Published Documentation
- [ ] Unpublished Documentation
- [ ] Correspondence
- [ ] Discrepancy

4. Title/Description Information: Material Safety Data Sheet, MICRO CEL-E

Document Number: N/A
Revision: N/A
Author: Celite Corporation
Date: 01/17/2009

5. AK Element	6. Generator Or Waste Type(s)	7. Location in Source Doc.	8. AK Information Summary:
WS4	BN-500, BN-501, BN-505, BN-507, BN-508, BN-509, BN-510, BN-511, BN-518, BN-520, BN-521, BN-528, BN-530, BN-531, BN-535, BN-600, BN-604, BN-605, BN-607, BN-608, BN-609, BN-610, BN-611, BN-612, BN-613, BN-614, BN-615, BN-616, BN-617, MD-801, MD-802, MD-803, MD-804, MD-805, MD-810, MD-811, MD-812, MD-813, MD-814, MD-815, MD-824, MD-825, MD-826, MD-827, MD-834, MD-835, MD-836, MD-838, MD-842, MD-847, RF-001, RF-002, RF-003, RF-004, RF-005, RF-007, RF-010, RF-020, RF-030, RF-040, RF-050, RF-060, RF-070, RF-080, RF-090, RF-095, RF-241, RF-290, RF-292, RF-300, RF-301, RF-302, RF-303, RF-310, RF-311, RF-312, RF-320, RF-321, RF-328, RF-330, RF-335, RF-336, RF-337, RF-338, RF-339, RF-33A, RF-33B, RF-360, RF-361, RF-368, RF-370, RF-371, RF-372, RF-374, RF-374a/697, RF-375, RF-376, RF-377, RF-	All	Document provides physical/chemical, hazard, disposal, transportation and PPE information associated with MICRO CEL-E product.

WS4	391, RF-392, RF-393, RF-409, RF-410, RF-411, RF-412, RF-414, RF-416, RF-420, RF-421, RF-422, RF-425, RF-430, RF-431, RF-432, RF-440, RF-441, RF-442, RF-44A, RF-460, RF-463, RF-464, RF-480, RF-481, RF-488, RF-48A, RF-490, RF-491, RF-696, RF-697, RF-700, RF-741, RF-742, RF-743, RF-744, RF-745, RF-746, RF-747, RF-748, RF-750, RF-751, RF-752, RF-800, RF-801, RF-802, RF-803, RF-806, RF-807, RF-807a, RF-807b/696, RF-817, RF-818, RF-820, RF-822, RF-823, RF-831, RF-832, RF-833, RF-900, RF-950, RF-960, RF-970, RF-976, RF-978, RF-980, RF-990, RF-995, UN-000, UN-00A, UN-00B, UN-00C, UN-00D	All	Document provides physical/chemical, hazard, disposal, transportation and PPE information associated with MICRO CEL-E product.

9. Document Summary:

The document outlines the composition, hazards, first aide, fire fighting measures, release measures, handling/storage precautions and exposure/personal protection measures, stability, physical and chemical properties, toxicology and ecological information, disposal considerations and transportation and regulatory information associated with this product.

The source document for this record is included in revision 0 of P808S on EDMS.

10. Source Document Data Limitations (if any):

MSDS may be updated in the future.

11. AK Expert:	Lloyd Gouldthorpe			7/18/2011
	Print		Sign	Date

RECORD
CMB 10-28-09

AMWTP Advanced Mixed Waste Treatment Project	AK Source Document Review Summary	Form-1068, Rev. 4 Effective: 01/08/09 Page 1 of 4

Implementing Document: MP-TRUW-8.13

1. Source Document Tracking Number: P808S	2. Revision: 0

3. Category

- [x] Published Documentation
- [ ] Unpublished Documentation
- [ ] Correspondence
- [ ] Discrepancy

4. Title/Description Information: Material Safety Data Sheet, MICRO CEL-E

Document Number:	N/A
Revision:	N/A
Author:	Celite Corporation
Date:	1/17/2009

5. AK Element	6. Generator Or Waste Type(s)	7. Location in Source Doc.	8. AK Information Summary:

WS4	BN-500, BN-501, BN-505, BN-507, BN-508, BN-509, BN-510, BN-511, BN-518, BN-520, BN-521, BN-528, BN-530, BN-531, BN-535, BN-604, BN-605, BN-607, BN-608, BN-609, BN-610, BN-611, BN-612, BN-613, BN-614, BN-615, BN-616, BN-617, MD-801, MD-802, MD-803, MD-804, MD-805, MD-810, MD-811, MD-812, MD-813, MD-814, MD-815, MD-824, MD-825, MD-826, MD-827, MD-834, MD-835, MD-836, MD-838, MD-842, MD-847, RF-001, RF-002, RF-003, RF-004, RF-005, RF-007, RF-010, RF-020, RF-030, RF-040, RF-050, RF-060, RF-070, RF-080, RF-090, RF-095, RF-241, RF-290, RF-292, RF-300, RF-301, RF-302, RF-303, RF-310, RF-311, RF-312, RF-320, RF-321, RF-328, RF-330, RF-335, RF-336, RF-337, RF-338, RF-339, RF-33A, RF-33B, RF-360, RF-361, RF-368, RF-370, RF-371, RF-372, RF-374, RF-374a/697, RF-375, RF-376, RF-377, RF-391, RF-392, RF-393, RF-409, RF-410, RF-411, RF-412, RF-414, RF-416, RF-420, RF-421, RF-422, RF-425, RF-430, RF-431, RF-432, RF-440, RF-441, RF-442, RF-44A, RF-460, RF-463, RF-464, RF-480, RF-481, RF-488, RF-48A, RF-490, RF-491, RF-696, RF-697, RF-700, RF-741, RF-742, RF-743, RF-744, RF-745, RF-746, RF-747, RF-748, RF-750, RF-751, RF-752, RF-800, RF-801, RF-802, RF-803, RF-806, RF-807, RF-807a, RF-807b/696, RF-817, RF-818, RF-820, RF-822, RF-823, RF-831, RF-832, RF-833, RF-900, RF-950, RF-960, RF-970, RF-976, RF-978, RF-980, RF-990, RF-995, UN-000, UN-	All	Document provides physical/chemical, hazard, disposal, transporation and PPE information associated with MICRO CEL-E product.

WS4	00A, UN-00B, UN-00C, UN -00D	All	Document provides physical/chemical, hazard, disposal, transporation and PPE information a

9. Document Summary:

The document outlines the composition, hazards, first aide, fire fighting measures, release measures, handling/storage precautions and exposure/personal protection measures, stability, physical and chemical properties, toxicology and ecological information, disposal considerations and transportation and regulatory information associated with this product.

10. Source Document Data Limitations (if any):

MSDS may be updated in the future.

11. AK Expert:	Tim Venneman			9-21-09
	Print		Sign	Date

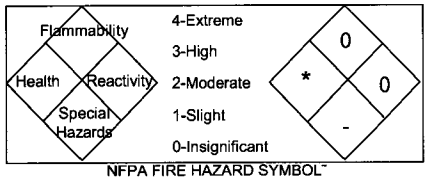

NFPA FIRE HAZARD SYMBOL™
See NFPA 704 for detailed explanation.
* See Section 3 HAZARD IDENTIFICATION

Material Safety Data Sheet

No.: 2611 **Rev. No.: 6**

Date Revised: 1/17/2007

1. CHEMICAL PRODUCT AND COMPANY IDENTIFICATION

Trade Name(s): MICRO-CEL® E (ALL GRADES)

Generic Name: SYNTHETIC CALCIUM SILICATE HYDRATE
Chemical Name: CALCIUM SILICATE
Manufacturer: CELITE CORPORATION
Address: P.O. BOX 519
City: LOMPOC **State:** CA **Zip:** 93438

CAS: 1344-95-2
EINECS: 215-710-8
Formula: $CaSiO_3$
Telephone: (805) 735-7791
Emergency: CHEMTREC - USA: (800) 424-9300
International: (703) 527-3887 (collect)

2. COMPOSITION/INFORMATION ON INGREDIENTS

INGREDIENT NAME:	CAS NUMBER:	%	PEL AND TLV (except as noted)
SYNTHETIC CALCIUM SILICATE	1344-95-2	100	5 mg/M³ RESPIRABLE NUISANCE DUST, OSHA 10mg/M³ TOTAL NUISANCE DUST, ACGIH

3. HAZARD IDENTIFICATION

Summary: PROLONGED AND REPEATED EXPOSURE TO EXCESSIVE CONCENTRATIONS OF THIS PRODUCT'S DUST, OR ANY NUISANCE DUST, CAN CAUSE CHRONIC PULMONARY DISEASE. DUST CONTACT WITH EYES MAY CAUSE TEMPORARY SCRATCHINESS OR REDNESS. THIS PRODUCT HAS NOT BEEN CLASSIFIED AS A CARCINOGEN BY NTP OR IARC.

Medical conditions which may be aggravated: PRE-EXISTING UPPER RESPIRATORY AND LUNG DISEASE SUCH AS, BUT NOT LIMITED TO BRONCHITIS, EMPHYSEMA AND ASTHMA.
Target Organ(s) : LUNGS, EYES

Acute Health Effects: TRANSITORY UPPER RESPIRATORY OR EYE IRRITATION.
Chronic Health Effects:PROLONGED AND REPEATED EXPOSURES TO EXCESSIVE CONCENTRATIONS OF PRODUCT DUST, IN EXCESS OF THE PEL/TLV, CAN CAUSE CHRONIC PULMONARY DISEASE.

Primary Entry Route(s) : INHALATION, DUST CONTACT WITH EYES.
Inhalation: IRRITATION AND SORENESS IN THROAT & NOSE. IN EXTREME EXPOSURES SOME CONGESTION MAY OCCUR.
Eyes: TEMPORARY IRRITATION OR INFLAMMATION.
Skin Contact: NA **Skin Absorption:** NA **Ingestion:** NOT HAZARDOUS WHEN INGESTED.

4. FIRST AID MEASURES

Inhalation: REMOVE TO FRESH AIR. DRINK WATER TO CLEAR THROAT AND BLOW NOSE TO EVACUATE DUST.
Eyes: FLUSH EYES WITH LARGE QUANTITIES OF WATER. IF IRRITATION PERSISTS CONSULT A PHYSICIAN.
Skin Contact: NA **Skin Absorption:** NA **Ingestion:** NA

5. FIRE FIGHTING MEASURES

Flash Point (Method) : NONFLAMMABLE **NFPA Flammable/Combustible Liquid Classification:** NA
Flammable Limits: LEL: NA **UEL:** NA **Auto-Ignition Temperature:** NA
Extinguishing Media: NA **Unusual Fire or Explosion Hazards:** NONE **Special Fire-Fighting Procedures:** NONE

6. ACCIDENTAL RELEASE MEASURES

Procedures for Spill/Leak: VACUUM CLEAN DUST WITH EQUIPMENT FITTED WITH HEPA FILTER. USE A DUST SUPPRESSANT SUCH AS WATER IF SWEEPING IS NECESSARY-

"Copyright® 1980. National Fire Protection Assoc., Quincy, MA 02269. This reprinted material is not the complete and official position of the NFPA on the referenced subject, which is represented only by the standard in its entirety.

7. HANDLING AND STORAGE

MINIMIZE DUST GENERATION AND ACCUMULATION. AVOID BREATHING DUST, AVOID CONTACT WITH EYES. SEAL BROKEN BAGS IMMEDIATELY. CONTINUE TO FOLLOW ALL MSDS/LABEL WARNINGS WHEN HANDLING EMPTY CONTAINERS.

8. EXPOSURE CONTROLS/PERSONAL PROTECTION

Goggles: GOGGLES OR SAFETY GLASSES WITH SIDESHIELDS ARE RECOMMENDED.
Gloves: NOT NORMALLY REQUIRED.
Respirator: <10X PEL, USE AN N95 QUARTER OR HALF MASK RESPIRATOR; <50X PEL, USE A FULL FACE RESPIRATOR EQUIPPED WITH N95 FILTERS; <200X PEL, USE A POWERED AIR PURIFYING RESPIRATOR (POSITIVE PRESSURE) WITH N95 FILTERS; >200X PEL, USE A FULL FACE, TYPE C SUPPLIED AIR RESPIRATOR (CONTINUOUS FLOW MODE).
Ventilation: USE SUFFICIENT NATURAL OR MECHANICAL VENTILATION TO KEEP DUST LEVEL BELOW PEL.
Other: Special Considerations for repair/maintenance of contaminated equipment: INSURE PROPER RESPIRATORY PROTECTION.

9. PHYSICAL AND CHEMICAL PROPERTIES

Appearance and Odor: FINE WHITE POWDER, NO ODOR.

Boiling Point:	NA	**Evaporation Rate (= 1):**	NA	**Specific Gravity (water = 1):**	2.3
Vapor Pressure:	NA	**Melting Point:**	ND	**% Volatile by Volume:**	NIL
Water Solubility (%):	NEGLIGIBLE	**Vapor Density (Air=1):**	NA	**pH:**	**7.5 - 9**

10. STABILITY AND REACTIVITY

MATERIAL IS STABLE. HAZARDOUS POLYMERIZATION CANNOT OCCUR.
Chemical Incompatibilities: HYDROFLUORIC ACID. **Conditions to Avoid:** NONE IN DESIGNED USE.

11. TOXICOLOGICAL INFORMATION

Summary: PROLONGED AND REPEATED EXPOSURE TO EXCESSIVE CONCENTRATIONS OF THIS PRODUCT'S DUST, OR ANY NUISANCE DUST, CAN CAUSE CHRONIC PULMONARY DISEASE. DUST CONTACT WITH EYES MAY CAUSE TEMPORARY SCRATCHINESS OR REDNESS. THIS PRODUCT HAS NOT BEEN CLASSIFIED AS A CARCINOGEN BY NTP OR IARC.

12. ECOLOGICAL INFORMATION

GENERALLY CONSIDERED CHEMICALLY INERT IN THE ENVIRONMENT. USED MATERIAL WHICH HAS BECOME CONTAMINATED MAY HAVE SIGNIFICANTLY DIFFERENT CHARACTERISTICS BASED ON THE CONTAMINANT AND SHOULD BE EVALUATED ACCORDINGLY.

13. DISPOSAL CONSIDERATIONS

WASTE IS NOT HAZARDOUS AS DEFINED BY RCRA (40 CFR 261). OTHER STATE AND LOCAL REGULATIONS MAY VARY, CONSULT LOCAL AGENCIES AS NEEDED. USED MATERIAL WHICH HAS BECOME CONTAMINATED MAY HAVE SIGNIFICANTLY DIFFERENT CHARACTERISTICS BASED ON THE CONTAMINANTS AND SHOULD BE EVALUATED ACCORDINGLY.

14. TRANSPORTATION INFORMATION

D.O.T. Proper Shipping Name: EARTH, DIATOMACEOUS, CRUDE OR GROUND **Hazard Classification:** NOT CLASSIFIED
Reportable Quantities: NOT APPLICABLE **UN (United Nations), NA(North America) Number:** NOT APPLICABLE

15. REGULATORY INFORMATION

OSHA Hazard Communications Standard, 29 CFR 1910.1200: MATERIAL IS CONSIDERED HAZARDOUS, SEE SECTION 3.
RCRA: THIS MATERIAL IS NOT DEFINED AS HAZARDOUS WASTE PER 40 CFR 261.
TSCA: THIS MATERIAL IS LISTED IN THE TSCA INVENTORY, AND IS NOT OTHERWISE REGULATED BY TSCA SEC. 4, 5, 6, 7 OR 12.
CERCLA: MATERIAL IS NOT REPORTABLE UNDER CERCLA, LOCAL REQUIREMENTS MAY VARY.
SARA: 311/312 HAZARD CATAGORIES - IMMEDIATE AND DELAYED HEALTH, 313 REPORTABLE INGREDIENTS - NONE.
Canada: THIS PRODUCT IS LISTED ON THE DSL.
California Proposition 65: NOT APPLICABLE

16. OTHER INFORMATION

Storage Segregation Hazard Classes: NA
Special Handling/Storage: REPAIR ALL BROKEN BAGS IMMEDIATELY.
Special Workplace Engineering Controls: ADEQUATE VENTILATION TO KEEP DUST LEVEL BELOW PEL.

Prepared/Revised by: WORLD MINERALS ENVIRONMENTAL HEALTH & SAFETY SERVICES

As of the date of preparation of this document, the foregoing information is believed to be accurate and is provided in good faith to comply with applicable federal and state law(s). However, no warranty or representation with respect to such information is intended or given.

DIVIDER

PAGE

Record 2005-0177

AMWTP Advanced Mixed Waste Treatment Project

AK Source Document Review Summary

AMWTP Form1068
Effective Date: 07/17/02, Rev. 1
MP-TRUW-8.13
Page 1 of 1

Reference Number: U107A

AK Type:

- ☐ **Published Documentation**
- ☒ **Unpublished Data**
- ☐ **Correspondence**
- ☐ **Discrepancy Report**

Title of Source Document (including author(s), document and revision number, date, etc.): Characterization of Rocky Flats Plant Special Setups Sludge Waste (IDCs 004, 802). DRAFT. 2002.

Information Source: BBWI Document Control.

AK # [a]	AK Information Summary
WS4 – 004, 802 WS6 – 004, 802	Summary of characterization data for Characterization of Special Setups, combining acceptable knowledge information with INEEL characterization results. Includes a description of the waste stream, packaging, and areas of operation, RCRA characterization, and potential radionuclides.

Source Document Data Limitations (if any):
This document is a "DRAFT". Solid sampling data is insufficient for the characterization of Special Setups Sludge Waste for IDCs 004 and 802.

AK Expert:

Betty J. Tolman (Betty J. Tolman) **Date:** 05/14/2003

Print **Sign**

[a] **Obtain from Acceptable Knowledge Documentation Checklists (AMWTP Form-1066/AMWTP Form-1067)**

INEEL/EXT-2002-000XXX
XXX 2002

Characterization of Rocky Flats Plant Special Setups Sludge Waste Stream (IDCs 004, 802)

Lisa Frost
*Joan Connolly**
*Christine Gomez***

*North Wind Environmental, Inc.
**WASTREN, Inc.

U107

INEEL/EXT-2002-000XXX

Characterization of Rocky Flats Plant Special Setups Sludge Waste Stream (IDCs 004, 802)

Lisa Frost
Joan Connolly*
Christine Gomez**

Published 2002

Idaho National Engineering and Environmental Laboratory
Bechtel BWXT Idaho, LLC
Idaho Falls, Idaho 83415

Prepared for the
U.S. Department of Energy
Assistant Secretary for
Environmental Management
Under DOE Idaho Operations Office
Contract DE-AC07-99ID13727

*North Wind Environmental, Inc.
**WASTREN, Inc.

ABSTRACT

This document, Characterization of Rocky Flats Plant Special Setups Sludge waste stream, summarizes the efforts performed at the Idaho National Engineering and Environmental Laboratory (INEEL) to support the assignment of hazardous waste numbers (HWNs) on the Special Setups Waste Stream, that is, Item Description Codes (IDCs) 004 and 802 drums. The characterization effort included a thorough review of acceptable knowledge (AK), physical characterization, waste form sampling, associated chemical analyses, and headspace gas (HSG) data. This effort included an assessment of pre-Waste Analysis Plan (WAP) solidified sampling and analysis data (referred to as preliminary data). Eight Special Setups sludge drums, provided in Table 1-1, have been subjected to core sampling and analysis according to the requirements defined in the Quality Assurance Program Plan (QAPP). Based on the statistical reduction of this preliminary data a sample size of five was calculated. The WAP provides for use of drum data from within the preliminary sample drum data set to satisfy sampling and analysis requirements. Three of the preliminary drums (preliminary Phase II randomly selected drums) are acceptable for this purpose, and meet the conditions stated in the WAP (Section B2, page B2-5). This is discussed in detail in Section 1.3 of this report. The data generated from the sampling of the three Phase II drums satisfy the conditions of the WAP and have been used to verify the sampling of the three Phase II drums satisfy the conditions. The pre-WAP data correlated very well with the WAP compliant drum data. However, the data generated from the Phase II drums do not meet the minimum of five drums in the data set. As a result, additional sampling is required. Based upon the information summarized in this document, an accurate preliminary assignment of HWNs can be made in the Waste Stream Profile for the Special Setups Sludge waste stream.

SUMMARY

This document, Characterization of Rocky Flats Plant Special Setups Sludge waste stream, summarizes the characterization efforts performed at the INEEL to support the assignment of HWNs for Special Setups, that is, IDCs 004 and 802 drums. This characterization effort included a thorough review of AK, physical characterization, waste form sampling, associated chemical analyses, and HSG data. Based upon the information and data summarized in this document an accurate preliminary assignment of HWNs can be made for the Special Setups Sludge waste stream. A complete and final assignment of HWNs cannot be made without additional sampling of this waste stream.

CONTENTS

ABSTRACT iii

SUMMARY v

ACRONYMS xi

1. INTRODUCTION 1-1

1.1 Scope 1-1

1.2 Background 1-1

1.3 Existing Data (pre-WAP) Usage 1-1

1.4 WAP Compliant Sampling and Analysis Data ..... Error! Bookmark r

2. WASTE DESCRIPTION AND ACCEPTABLE KNOWLEDGE 2-4

2.1 History 2-4

2.2 Waste Stream Identification 2-4

2.2.1 Waste Description 2-4
2.2.2 Waste Generation Process 2-5

3. ACCEPTABLE KNOWLEDGE HAZARDOUS WASTE CODE DETERMINATION 3-1

3.1 Characteristic Determination 3-1

3.1.1 Corrosivity 3-1
3.1.2 Toxicity 3-1
3.1.3 Ignitibility 3-2
3.1.4 Reactivity 3-3

3.2 Listed Determination 3-3

3.3 Additional WAP/Waste Acceptance Criteria (WAC) Characterization Data 3-5

3.3.1 Radionuclides 3-5
3.3.2 Radiography/Visual Examination (VE) 3-6

4. CONFIRMATION OF HAZARDOUS WASTE CODE ASSIGNMENTS BASED ON HEADSPACE GAS SAMPLING AND HOMOGENOUS SOLIDS ANALYSIS 4-1

4.1 Headspace Gas Sampling and Analysis Results 4-1

4.2 Preliminary Data 4-2

4.2.1 Metals Data Assessment Summary 4-3
4.2.2 SVOC Assessment Summary 4-3
4.2.3 Purgeable VOC Assessment Summary 4-4
4.2.4 NH VOC Data Assessment 4-4
4.2.5 Preliminary Data TIC Assessment 4-4
4.2.6 Preliminary Data Results and Sample Size 4-4

4.3 WAP Compliant Drum Analysis ..... Error! Bookmark r

4.4 Confirmation of Hazardous Waste Codes Assigned ..... Error! Bookmark r

5. NONCONFORMANCES ..... Error! Bookmark r

6. IMPLICATIONS AND FUTURE ACTIONS 5-1

7. CONCLUSIONS ..... Error! Bookmark r

8. REFERENCES 6-1

9. APPENDICES ..... Error! Bookmark r

FIGURES

2-1. Aqueous treatment process ..... Error! Bookmark r

TABLES

1-1. First/second-stage drums sampled prior to the WAP 1-2
1-2. WAP Compliant Drums. ..... Error! Bookmark r
3-1. Characteristic (Toxicity) Hazardous Waste Codes Assigned to First/Second-Stage Sludge Based on AK ..... Error! Bookmark r
3-2. Listed hazardous waste codes assigned to first/second-stage sludge based on AK. 3-4
4-1. Headspace gas summary data 4-1
4-2. First/second stage sludge TICs and summary statistics. ..... Error! Bookmark r
4-3. First/second stage sludge WAP compliant sample size determination. 4-6
4-4. First/second stage sludge summary statistics for analytes without regulatory thresholds. ..... Error! Bookmark r
4-5. WAP compliant data analysis for first/second stage sludge ..... Error! Bookmark r
SV-1. The average data used to generate the MS/MSD graphs. ..... A-Error! Bookmar
SV-2. The LCS results summary ..... A-Error! Bookmar
SV-3. The data used to generate the LCS graphs presented by compound ..... A-Error! Bookmar
SV-4. The detailed QC data by batch number for the MS/MSD and LCS data. ..... A-Error! Bookmar

SV-5. The detailed QC data by batch number for the MS/MSD and LCS data. ..... A-Error! Bookmar
SV-6. Recovery of surrogate 2FP. ..... A-Error! Bookmar
SV-7. Surrogates NBZ, FBP, 2FP, TBP summary. ..... A-Error! Bookmar
V-1. The average data used to generate the MS/MSD graph. ..... A-Error! Bookmar
V-2. The LCS results summary. ..... A-Error! Bookmar
V-3. The data used to generate these graphs presented by compound. ..... A-Error! Bookmar
V-4. The data used to generate these graphs presented by compound. ..... A-Error! Bookmar
V-5. The detailed QC data organized by batch. ..... A-Error! Bookmar
V-6. The detailed QC data organized by batch. ..... A-Error! Bookmar
V-7. The recovery data for the four surrogate compounds. ..... A-Error! Bookmar
V-8. A summary of the surrogate compound average percent recoveries. ..... A-Error! Bookmar
N-1. The averages data used to generate the MS/MSD graph summary. ..... A-Error! Bookmar
N-2. The LCS results summary. ..... A-Error! Bookmar
N-3. The data used to generate these graphs presented by compound. ..... A-Error! Bookmar
N-4. The detailed QC data by batch. ..... A-Error! Bookmar
N-5. The detailed QC data by batch. ..... A-Error! Bookmar

ACRONYMS

3-σ	three-sigma
2FP	2-fluorophenol
%R	percent (%) recovery
ACMM	Analytical Chemistry Methods Manual
AK	acceptable knowledge
Am	Americium
ANL-W	Argonne National Laboratory – West
Ba	Barium
Be	Beryllium
BFB	4-bromofluorobenzene
CAR	Corrective Action Report
CBFO	Carlsbad Field Office
Cd	Cadmium
CFR	Code of Federal Regulations
Cr	Chromium
Cs	Cesium
DCA	1,2-dichloroethane-d4
DCHP	dicesium hexachloroplutonate
DOE	Department of Energy
DOT	Department of Transportation
ECM	electrochemical milling
EDF	Engineering Design File
EDL	economic discard limit
EDTA	ethenediaminetetraacetic acid
EPA	Environmental Protection Agency

FBP	2-fluorobiphenyl
Fe	iron
Hg	Mercury
HSG	headspace gas
HT	holding time
HWN	hazardous waste number
ID	identification
IDC	Item Description Code
INEL	Idaho National Engineering Laboratory
INEEL	Idaho National Engineering and Environmental Laboratory
K	Potassium
LCS	laboratory control sample
MDL	Method Detection Limit
MPC	Matrix Parameter Category
MS	matrix spike
MSD	matrix spike duplicate
Na	Sodium
NaCl	Sodium chloride
NBZ	nitrobenzene-d5
NCR	nonconformance report
NH	non-halogenated
Ni	Nickel
Np	Neptunium
Pb	Lead
PCB	polychlorinated biphenyl
PDP	Performance Demonstration Plan

PLN	Plan
PRQL	program-required quantitation limit
Pu	plutonium
PVC	polyvinyl chloride
QAO	quality assurance objective
QAPP	Quality Assurance Program Plan
QC	Quality Control
RCRA	Resource Conservation Recovery Act
RFP	Rocky Flats Plat
RPD	relative percent difference
RTL	regulatory threshold limit
RTR	real-time radiography
RWMC	Radioactive Waste Management Complex
Sb	Antimony
SD	standard deviation
SPO	site project office
Sr	Strontium
SVOC	Semi-volatile Organic Compound
SW	Solidified Waste
SWEPP	Stored Waste Examination Pilot Plant
TBP	2,4,6-tribromophenol
TC	toxicity characteristic
TCLP	Toxicity Characteristic Leaching Procedure
Th	Thorium
TIC	tentatively identified compound
Tl	Thallium

TOL	tofuene-d8
TRU	transuranic
TWCP	Transuranic Waste Characterization Program
U	Uranium
UCL_{90}	upper 90% confidence limit
VE	Visual Examination
VOC	Volatile Organic Compound
WAC	Waste Acceptance Criteria
WAP	Waste Analysis Plan
WIPP	Waste Isolation Pilot Plant
Zn	Zinc

Characterization of Rocky Flats Plant Special Setups Sludge Waste Stream (IDCs 004, 802)

1. INTRODUCTION

Transuranic (TRU) and mixed TRU waste destined for disposal at the Waste Isolation Pilot Plant (WIPP) must be characterized in accordance with the WIPP Part B Permit [U.S. Environmental Protection Agency (EPA) No. NM4890139088]. Characterization requirements are derived from 40 Code of Federal Regulations (CFR) Parts 260 through 265, 268, and 270 and are documented within the permit in the Waste Analysis Plan (WAP). The characterization strategy is based on acceptable knowledge (AK) as specified in the February 4, 2002 WAP. AK information is used to identify waste streams and make EPA hazardous waste number (HWN) assignments. HWNs are then confirmed through headspace gas (HSG) and homogenous solids sampling and analysis as required by the WAP.

The Idaho National Engineering and Environmental Laboratory (INEEL) TRU Waste Characterization Program (TWCP) has evaluated preliminary solidified sampling data to confirm AK HWN assignments for the Rocky Flats Plant (RFP) Special Setups Sludge waste stream. The results of this evaluation are documented in this report. This report contains seven sections: Section 1, provides an overview describing the study scope, background information, and WAP compliance; Section 2, waste stream specific, AK information; Section 3, HWNs based on AK; Section 4, provides confirmation of AK based on sampling and analysis; Section 5, provides nonconforming conditions, associated corrective actions, and mitigative factors; Section 6, discusses implications and future actions for subsequent waste streams; and Section 7, the summary/recommendations.

1.1 Scope

The HWN determination provided herein applies to the Special Setups Sludge [Item Description Codes (IDCs) 004, 802] waste stream. This waste stream consists of a population of 427 drums generated by liquid waste treatment operations in Building 774, at the RFP, located outside Denver, Colorado. These wastes were generated from 1972 through 1988 and currently reside at the INEEL Radioactive Waste Management Complex (RWMC).

1.2 Background

Prior to the WAP issuance date, the INEEL performed TRU waste sampling and analysis for homogenous solids under the Carlsbad Field Office (CBFO) TRU Waste Characterization Quality Assurance Program Plan (QAPP) requirements. Eight Special Setups Sludge drums, given in Table 1-1~~Table 1-1~~Table ~~1-1~~, have been subjected to core sampling and analysis using the requirements defined in the QAPP. The drum selection process is discussed in detail in Engineering Design File (EDF)-909, Transuranic Waste Sampling Plan for the INEEL. The INEEL methodology consisted of Phase I and II sampling campaigns. Phase I was exploratory sampling used to determine appropriate sampling sizes for Phase II. Phase II sampling was undertaken to validate Phase I results and to verify AK relative to toxicity characteristics. A brief summary of pre-WAP INEEL sampling is provided below.

Phase I samples were subject to a temporal selection spanning the years that the waste stream was generated. The diversity of sample selection ensured that the sample would be representative of the waste stream, as no known or expected relationship existed between the sample selection process and the contaminant concentrations. However, Phase I samples were not randomly chosen.

Phase II samples were selected randomly. To select the required number of samples, identified from Phase I results, the container selection procedure involved creating a list of all the containers in the waste stream, assigning serial numbers to each container on the list, using a random number generator to select the desired number of samples from the list of serial numbers, and then selecting containers to sample based on the serial number selection. A total of three Phase II drums were selected, sampled, and analyzed (see Table 1-1~~Table 1-1~~Table 1-1).

Table 1-1. Special Setups Sludge waste stream drums sampled prior to the WAP.

1	RF074404260	004	I / Exploratory Sampling	1997
2	RF074404295	004	I / Exploratory Sampling	1997
3	RF074404342	004	I / Exploratory Sampling	1997
4	RF074404389	004	I / Exploratory Sampling	1997
5	RF074404401	004	I / Exploratory Sampling	1997
6	RF074403924	004	II /Randomly Selected	1999
7	RF074404439	802	II /Randomly Selected	1999
8	RF074404502	802	II /Randomly Selected	1999

1.3 Preliminary Data Usage

The INEEL has used the preliminary solids data, Phases I and II drums, to confirm AK HWN assignment and assess assignment of additional HWNs, as appropriate. As described in Section B2-2a of the WAP, use of preliminary data in this manner is acceptable.

> *The preliminary estimates will be made by obtaining a preliminary number of samples for the waste stream or from previous sampling from the waste stream. Preliminary estimates will be based on samples from a minimum of 5 waste containers. Samples collected to establish preliminary estimates that are selected, sampled, and analyzed (in accordance with applicable provisions of the WAP) may be used as part of the required number of samples to be collected. The applicability of the preliminary estimates to the waste stream to be sampled shall be justified and documented.*

Based on discussion with CBFO personnel, justifying and documenting the preliminary estimates involve addressing the following bullets from Section B2-2a of the WAP:

- *There is documented evidence that the waste containers for the preliminary estimate samples were selected in the same random manner as is chosen for the required samples.*

The statistical assessment of the preliminary sample data (Phases I and II) indicated that five (5) randomly selected samples were needed to characterize the waste stream. Nine samples were randomly selected as part of the Phase II sampling effort. EDF-909, *Transuranic Waste Sampling Plan for INEEL*, Appendix C, contains lists of drums that were randomly selected and sampled including one that addresses Special Setups sludge. Three Phase II drums in the Special Setups sludge Appendix C list were randomly selected from the entire inventory and are appropriate for use in confirming the preliminary results and assigning HWNs to the waste stream.

- *There is documented evidence that the method of sample collection in the preliminary estimate samples were identical to the methodology to be employed for the required samples.*

The Phase II Special Setups sludge random samples were collected and analyzed in 1997 and 1999 prior to the approval of the WAP. The preliminary samples as well as the Phase II samples were all collected using the same sampling method an approach.

The WIPP WAP requires that samples be representative of the waste from which they were taken (Section B1-2a).

- *There is documented evidence that the method of sample analysis in the preliminary estimate samples were identical to the analytical methodology employed for the required samples.*

The Phase II Special Setups sludge random samples were collected and analyzed in 1999. Core collection was accomplished using the same drill, auger, and bit apparatus and the identical sampling procedures/methods used currently. There was a change in the design of the tube liner from a split tube to solid tube that affected the collection of the sub-samples. All the Special Setups sludge cores were collected using a split tube liner. Two five-gram random grab samples were collected from one side of the split tube. In contrast, the currently used solid tubes are cut into cross sections at ¼ inch intervals and three cross-sectional samples are collected and composited. Samples collected from the split tube liners were not cross-sectional samples. As required, the Phase I and II Special Setups sludge samples were collected using the same sampling methods. Identical core liner materials, disposable sub-sample collection tools, sample

preservation techniques, and chain of custody protocol were used. The sub-sampling procedure/method used to collect all pre-WAP samples was designed to ensure that the aliquots were collected across the core length to be representative of the whole. The number of sub-samples collected was two (2) for the preliminary samples and the current requirement is three (3). The difference in the sub-sampling approach (preliminary sample collection versus current practice) did not adversely affect the data quality relative to the waste stream characterization. The collection of two (2) individual grab samples versus one composite volatile organic compound (VOC) sample from three (3) sub-sample locations does not compromise the representativeness. Statistical assessment of the preliminary data (both Phase I and Phase II together) reflected reasonable variance in the data across the waste stream. The Phase II sample results reflected the same level of variance. Therefore, the sub-sample collection approach used on the random samples (Phase II) creates a conservative data set that is a worse case estimate of contaminant concentrations. Sub-sampling is a minor component of sampling error. The random selection of drums (between-container variance) and core locations ("x" component within-container variance) capture the majority of the expected variance across the waste stream. The effect of the sub-sample location ("y" component of the within-container variance) and ultimately the characterization upper 90% confidence limit (UCL_{90}) of the waste stream is minimal.

- *There is documented evidence that the method of sample analysis in the preliminary estimate samples were identical to the analytical methodology employed for the required samples.*

The analytical methods used for the Phase II samples are identical to the current WAP compliant methodology. Phase II samples were also run in compliance with the same WAP required Solidified Waste (SW) -846 methods. At the time the WAP was finalized, all preparatory and determinative methods were combined into one Analytical Chemistry Methods Manual (ACMM) method retaining all the TRU Program requirements. For example, VOC requirements for preparation (ACMM 9501) and determination (ACMM 9261) were combined into one method (ACMM 9260). In all cases the methodology did not change. All methods used by the laboratory (both pre- and post-WAP) were qualified through participation in the Resource Conservation Recovery Act (RCRA) Performance Demonstration Program (PDP). In every RCRA PDP cycle, the results for all methods tested were deemed acceptable by CBFO.

The consolidation of analytical requirements into fewer methods resulted in an apparent difference in ACMM method numbers, the following detailed explanation is provided to support the rationale from a technical perspective, however, these methods are the same.

Table 1-2 provides a summary of the ACMM methods with the associated revisions cross referenced to the applicable TWCP implementing documents and SW-846 methods. The method revisions effective through the duration of Plan (PLN)-187, *INEEL Analytical Chemistry Laboratory Implementation Plan for the Transuranic Waste Characterization Implementation Plan*, and PLN-600, *Analytical Laboratory Department Quality Assurance Plan for the Transuranic Waste Characterization Program*, are indicated as well. PLN-600 information provides a cross reference to current procedures. The methods and revisions associated with the analysis of the Phase II samples are also provided. Analytical methods used for sample analyses are described in TRU program plan PLN-187. As shown in Table 1-2, all of the ACMM and SW-846 methods for metals including those for mercury (Hg) were the same in both plans. The revisions differ slightly from the PLN-600 revisions currently effective.

Table 1-2. Methods matrix for Phase II data

Analysis Type	PLN-187 (Rev. 0, 1, and 2): ACMM Methods 1997-1999		PLN-600 (Rev. 2, 11/1/00): ACMM Methods		SW-846 Methods		WSPF: ACMM Methods used on the Phase II Special Setups Sludge	
	Prep	Determinative	Prep	Determinative	Prep	Determinative	Prep	Determinative
Metals	8909 Rev. 0-2	2900 Rev. 1-3	8909 Rev. 0-2	2900 Rev. 3	3051	6010	8909 Rev. 1	2900 Rev. 3
Mercury (Hg)	7802 Rev. 3-7	7802 Rev 3-7	7802 Rev. 4-7	7802 Rev. 4-7	7471	7471	7802 Rev. 5	7802 Rev. 5
VOCs	9501 Rev. 0-5	9260 Rev. 0-2 9261 Rev 1-3	9260 Rev. 0-2	9260 Rev. 0-2	5035	8260	9501 Rev. 4	9261 Rev. 3
NH VOCs	9501 Rev. 0-5	9441 Rev. 0&2	9441 Rev. 1-2	9441 Rev. 1-2	5035	8015	9501 Rev. 4	9441 Rev. 2
SVOCs	9501 Rev. 0-5	9271 Rev. 1-4	9500 Rev. 2	9270 Rev. 2	3550	8270	9501 Rev. 4	9271 Rev. 4

Preliminary solids analysis data generated under the QAPP and prior to the final WAP have been validated in a comparable manner as required. This data was generated using analytical methodology currently acceptable under the WAP. The site project office (SPO) has documented evidence that the validation of the sample analyses in the preliminary estimate samples address all WAP requirements. Current WAP-compliant SPO validation procedures were used to validate all solid/sampling analysis data packages used in the preliminary estimate. All validated Quality Assurance Objectives (QAOs) have been deemed useable and are therefore valid according to the analytical methodology as per WAP requirements.

WAP Attachment B2 goes on to state:

Upon collection and analysis of the preliminary samples, or at any time after the preliminary samples have been analyzed, the generator/storage site may assign hazardous waste codes to a waste stream. For waste streams with calculated upper confidence limits below the regulatory threshold, the site shall collect the required number of samples if the site intends to establish that the constituent is below the regulatory threshold.

This requirement states that the "required number of samples" must be collected if the generator site "intends to establish that the constituent is below the regulatory threshold." The WAP does not require collection of additional samples when considering constituents that preliminary data indicate are at or above the regulatory threshold limit (RTL), or for constituents where the preliminary data show concentrations below the RTL for which the site has no intention of removing the HWN as assigned by AK.

A WIPP WAP hotline question was submitted to CBFO asking for concurrence with the above interpretation. The response is given below:

> *Yes, it is acceptable to use the existing preliminary data as the basis for confirming EPA hazardous waste codes. If the waste is determined to be hazardous based on the preliminary data (TRU-mixed) no further sampling is required. However, if the site wishes to demonstrate that the waste is non-hazardous (not TRU-mixed), then a minimum number of samples must be obtained in accordance with WAP equation B2-7.*

AK HWNs were verified and assigned based on the preliminary analytical results as appropriate (listed and characteristic codes). If an analyte was detected at characteristic levels or at significant concentrations (within an order of magnitude of the RTL) assignment of the appropriate HWNs was recommended. If the data indicate that, based on AK and lack of significant detection, characteristic analytes are not present, assignment of a HWN was not recommended. Also, if AK assigned a HWN, the code was not removed using preliminary data.

2. WASTE DESCRIPTION AND ACCEPTABLE KNOWLEDGE

This section summarizes the AK concerning the Special Setups Sludge waste stream. Additional detail may be found in INEL-96/0280, Acceptable Knowledge Document INEEL Stored Transuranic Waste - Rocky Flats Plant Waste, and [redacted], *Waste Stream Summary Sheet – Solidified Laboratory Waste*.

2.1 History

This waste group consists of solidified liquid wastes that were not compatible with the primary aqueous waste treatment system, such as complexing agents, strong acids, and strong bases. The acidic liquids were neutralized and all liquids were solidified in Building 774. The liquid wastes that were generated in numerous buildings on plant site, were treated to produce IDCs 004 and 802.

2.2 Waste Stream Identification

The WAP defines a waste stream as "waste material generated from a single process or from an activity that is similar in material, physical form, and hazardous constituents." The INEEL approach identifying waste streams is documented in EDF-922, Identification of Transuranic Waste Streams This approach combines IDCs that have a similar physical composition and the same regulated constituents. Since the waste was generated from a single process line, is of a similar material and physical form, and has identical hazardous waste numbers, the Special Setups Sludge waste stream (containing IDCs 004 and 802) have logically been combined through this methodology. The resulting waste stream contains 427 drums.

2.2.1 Waste Description

The sludges that were solidified in RFP Building 774 are assigned IDCs 004 and 802. IDC assignment identifies nuclear material forms or process materials associated with waste generation. A detailed description of each IDC follows.

2.2.1.1 IDC 004, Special Setups-Building 774: This waste consists of liquids, primarily from laboratory operations throughout plant site that were neutralized and solidified in Building 774. A mixture of Portland cement and insulation cement was placed in a lined 55-gallon drum. The liquid waste, if acidic, was neutralized and then added to the cement mixture, which cured to form a solid monolith. Some drums may contain polyethylene bottles of solidified waste.

2.2.1.2 IDC 802, Solidified Laboratory Waste Building 774: The cementation process for IDC 802 was similar to IDC 004. IDC 802 replaced IDC 004 in approximately 1986. The IDC was changed to designate containers of solidified laboratory waste that were certified for disposal.

2.2.2 Waste Generation Process

Liquid wastes that were not compatible with the primary aqueous waste treatment system were solidified in Building 774. The liquids, which include complexing agents, strong acids, and strong bases, were generated primarily from the analytical laboratories, research and development laboratories, and maintenance shops. Specifically, the liquid wastes originated in Buildings 122, 123, 126, 371, 444, 447, 559, 705, 707, 750, 771, 777, 779, 865, 881, 883, 886, and 991. The liquids generated in the analytical laboratories in Buildings 371, 559, and 771 were sent to Building 771 for recovery if they contained plutonium above the economic discard limit (EDL). Following recovery, the liquids were transferred to Building 774 where they were immobilized in cement. Liquid wastes from the other buildings and processes were below the EDL and were also solidified in Building 774. A process flow diagram for solidified laboratory waste is provided in Figure 2.1.

2.2.2.1 Neutralization and Solidification Process

Packaged waste received in plastic bottles was entered into the glove box. The bottles containing acid waste were then transferred into Tank T-7, the receiver and neutralizer tank adjacent to the glove box. After sodium hydroxide was added to Tank T-7, pH paper was used to ensure the acid waste had been neutralized. Basic liquid wastes received were not neutralized prior to solidification.

A mixture of approximately 250-300 pounds of Portland type I/II cement and 100-150 pounds of insulation cement were placed in a lined 55-gallon drum that was attached to the glove box. Approximately 80-100 liters of the basic liquid waste or neutralized liquid waste was added to the cement mixture and placed on a drum roller to ensure mixing of the contents. The cement mixture in the drum reacted with the waste solution to form a solid monolith.

Periodically, polyethylene bottles were filled with the cement mixture and sent to the small quantity waste generators on plant site for addition of the liquid waste.

2.2.2.2 Liquid waste generation

A setup logbook was used in Building 774 to record the types of waste and generation source of IDCs 004 and 802. The date of treatment, generation location, waste description, and treatment process were entered in the logbook. All wastes with treatment entries indicated as "bottle box" or "setup in bottle box" were those treated by this process. If the entry was "setup" with no indicated treatment process, it was assumed to be included in IDC 004 and 802, except large volumes (> 1 drum) of organic liquids. There are numerous entries for less than 10 liters of organic waste treated in the bottle box system. A large volume of organic waste is not compatible with the bottle box solidification system and would most likely have been treated in the solidified organic waste system and not the glove box process used for the Special Setups Sludge waste stream.

A description of the liquid wastes treated by this process including generation buildings is presented in Table 2-1. Information in parentheses does not appear in the logbook but is provided as clarification.

Table 2-1: Liquid Wastes Included In IDCs 004 and 802.

Generation Building	Waste Description
122	Plutonium (Pu)-239, and iron (Fe)-55 (assumed to be sources)
123	Anion & cation resin, glass wool, hydrochloric acid, and nitric acid; lab waste; liquid bromine; NH_4Cl; barium (Ba)-133 (assumed to be a source); enriched uranium (U), neptunium (Np)-237, strontium (Sr)-90, and tritium sources; small amount of liquid apparently had been a standard
126	Isotopes (assumed to be sources)
371	Dicesium hexachloroplutonate (DCHP); effluent waste; lab waste
444	Ox-out/5.5% nitric acid (Ox-out is a water solution of nitric acid and ammonium bifluoride); phosphoric acid; chromic acid; sodium lignosulfonate; Versene (Versene is a trade name ethenediaminetetraacetic acid [EDTA] product)
447	Contaminated Turco bath (Turco is a trade name for a series of cleaners with various combinations of acids, complexing agents, and surfactants)
559	5-15% phosphoric acid; basic lab waste; beryllium chloride salts; electroetch solution; inorganic waste; m-phenylenediamine; scrubber waste; tritium scintillation cocktail contains toluene; tritium analytical waste
705	Ox-out (Ox-out is a water solution of nitric acid and ammonium bifluoride)
707	Coolant water; dist. water
750	Absorber - no contamination

Generation Building	Waste Description
771	Acid solution; acrylonitrile; americium oxalate filtrate; basic cyanide waste; basic lab waste; boilout solution; cadmium nitrate; caustic; Cl and SCN waste; citric solution - Am. citrate solution; Cl-NO_3 waste; Cl_2 waste HF trapping solvent; cooling water; depleted uranium in nitric acid; distillate water and detergent; ethylene glycol; filter solution; floor sweepings (oxide waste); HCl dissolns.; HF fluoride solution; hydrofluoric, oxalic, and ascorbic acid with stannous chloride; magnesium, potassium, and sodium (assumed to be in solution, the waste volume is reported in liters); met lab waste; nitrate, borate, chromate, and oxalate; OH filtrate; phosphoric acid, 2-ethoxyethanol, oxalic acid, ethylene glycol, water, and ethyl alcohol; potassium hydroxide; Pu-Cm sludge; slurried cement; SST (assumed to be stainless steel) capsules - depleted uranium; tetraphosphoric acid; titanium tetrachloride; U-233 in oil; U-233 plating solution; U-233 filtrate solution; U-238 acid waste; solid cerium; wash solution; waste acid nickel plating; waste etching solution; waste solution; water from compactor; Metex solution (Metex is a trade name for a series of inorganic and organic acids or salts)
777	Dist. water
779	75% sulfuric acid; americium solution; contaminated soil; cesium (Cs)/sodium (Na)/ potassium (K)/NaCl salts; depleted uranium; etchant solution; tetraphosphoric; etching solution; perchloric acid; hydrochloric acid solution; low level waste; metal X and B273 (no reference was found to identify the constituents of this material); nitric acid; oil; phosphoric acid and ethylene glycol; plutonium oxide and sodium hydroxide; propylene carbonate; waste solution; water etching solution
865	700 gram picric acid - reacted with Na_2S NaOH (NH_4) 2s, aqueous cut-off wheel solution
881	Acid solution Pu, Am, U; aqueous; chlorophenol; ECM (electrochemical milling) sludge; hot waste solution Pu, Np, amerium (Am), thorium (Th), U; lab waste solution-high in tritium; liquid from vacuum trap; low-level waste Np, U-235, Pu, Am; nitrate and chloride salts; tributyl phosphate; tritiated water; tritium
883	Grinder coolant, machine coolant
886	Kepro developer (Kepro developer contains 1,1,1-trichloroethane)
991	Ox-out containing beryllium (Ox-out is a water solution of nitric acid and ammonium bifluoride)

3. ACCEPTABLE KNOWLEDGE HAZARDOUS WASTE NUMBER DETERMINATION

The Special Setups Sludge waste stream, generated from Building 774 treatment processes, contains chemical constituents reflective of the operations performed throughout the plant. Process knowledge, summarized in Section 2, indicates the waste may contain both characteristic and listed constituents. However, the mere presence of hazardous constituents does not necessarily cause a waste to be hazardous by definition if such constituents do not result from a prescribed use or do not exceed regulatory limits in a representative sample. Below is a summary of AK relative to characteristic and listed constituents.

3.1 Characteristic Determination

3.1.1 Corrosivity

Based on testing and knowledge of the waste stream, it has been determined that the Special Setups Sludge waste stream does not meet the definition of a characteristic waste due to corrosivity. To be a corrosive waste under RCRA, a material must possess either of the following properties:

- It is aqueous with a pH ≤ 2, or, ≥ 12.5. To measure the pH, the EPA prescribes the use of Method 9040 in the definition of corrosivity found at 40 CFR Section 261.22. This method requires that > 20% of the total waste volume is aqueous; or
- A liquid as determined by its ability to pass through a certain type of filter and will corrode steel at a rate of 0.25 inches per year.

As has been determined by radiography and confirmed by visual examination [redacted] these drums contain 20% by volume, aqueous waste; thus, the corrosive characteristic does not apply. If a waste is not a liquid by definition, a determination of its ability to corrode steel would be inappropriate. Consequently, it is not appropriate to test the pH of the waste or its ability to corrode steel pursuant to the required methodologies.

The material in this waste group does not meet the definition of corrosivity as defined in 40 CFR 261.22. The material is not a liquid, and residual liquids are not normally associated with this waste. In addition, absorbents were added to wastes having the potential of generating free liquids (i.e., dewatering of cemented wastes). Visual inspection identified one drum containing 20 milliliters of liquid on the outside of the rigid liner. The liquid appeared to be water or condensation and would not be corrosive. The materials in this waste group are therefore not corrosive wastes (D002).

3.1.2 Toxicity

To exhibit the toxicity characteristic, concentrations of certain metals or organics must equal or exceed the regulatory threshold limits in an extract generated using a test method known as the Toxicity Characteristic Leaching Procedure (TCLP). Results of the TCLP test are compared with levels that the EPA has identified as hazardous to projected receptors. In lieu of the TCLP, totals analysis can be used to estimate a worst-case situation

The material in this waste group does not meet the definition of toxicity as defined in 40 CFR 261.24. The toxicity characteristic contaminants fall into one of two categories: metals and organics. Organic compounds include halogenated- and non-halogenated-solvents, pesticides, herbicides, and other toxic compounds.

Surrogate laboratory waste was spiked with various concentrations of barium, cadmium, chromium, lead, and silver. Sampling and TCLP analysis of the resultant solidified waste form indicated that the surrogate sample did not exhibit the characteristic of toxicity for these metal compounds. Although arsenic and mercury were not tested, there is no documentation indicating that these compounds were solidified in the process. Therefore, this waste group does not exhibit the characteristic of toxicity due metals (D004-D011).

There is no documentation indicating the presence or use of pesticides or herbicides in the areas or processes generating filters and insulation. Therefore, this waste group does not exhibit the characteristic of toxicity due to pesticides or herbicides (D012-D017).

Carbon tetrachloride and trichloroethene were used in the laboratory as well as many other operations on plant site. Since these compounds were typically used as solvents, the waste is regulated as a listed hazardous waste and not a characteristic waste because these compounds are specifically addressed in the treatment standards for the listed hazardous waste. Since Special Setups Sludge waste is characterized as listed hazardous wastes due to spent solvent contamination, the waste is not a toxic waste due to the presence of these organic compounds.

3.1.3 Ignitibility

Based on knowledge of the waste stream and generation processes, it has been determined that the waste does not meet the definition of an ignitable waste under RCRA. To be considered ignitable under RCRA, a material must possess any of the following properties:

- It is a liquid other than an aqueous solution containing > 24 % alcohol and a flash point of < 140°F (60°C)
- It is not a liquid but is capable of causing fire through friction, adsorption of moisture, or spontaneous chemical changes
- It is an ignitable compressed gas
- It is an oxidizer as defined by U.S. Department of Transportation (DOT) regulations.

As discussed above, the waste does not contain liquids. Nothing in the waste stream is a solid that has qualities likely to ignite through friction, moisture adsorption, or chemical changes. As has been determined through radiography and confirmed through visual examination, no compressed-gas cylinders exist in the waste. AK indicates that DOT oxidizers were not used in the process, therefore do not exist in the waste.

The material in this waste group does not meet the definition of ignitability as defined in 40 CFR 261.21. The material is not a liquid, and free liquids are not normally associated with this waste. In addition, absorbents were added to wastes having the potential of generating free liquids (i.e., dewatering of cemented wastes). Visual inspection identified one drum containing 20 milliliters of liquid on the outside of the rigid liner. The liquid appeared to be water or condensation and would not be ignitable. The material is not a compressed gas, nor does the waste contain compressed gases. Even though oxidizers were added to solidified laboratory waste for treatment, the cementation process would remove the oxidizer property. Therefore, the resultant material is not a DOT oxidizer as defined in 49 CFR 173. The material is not capable of causing fire through friction, absorption of moisture, or spontaneous chemical change. The materials in this waste group are therefore not ignitable wastes (D001).

3.1.4 Reactivity

Based on knowledge of the waste stream and generation processes, it has been determined that the waste does not meet the definition of a reactive waste under RCRA. To be considered a reactive waste under RCRA, a material must possess any one of the following properties:

- Is unstable and can undergo violent change
- Reacts violently with water
- Forms potentially explosive mixtures with water
- Reacts with water to generate toxic gases, vapors, or fumes that are harmful
- Contains cyanide or sulfide that can generate toxic gases, vapors, or fumes
- Can detonate or explode at standard temperature and pressure
- Is a DOT forbidden or Class A or B explosive.

No material was used or generated in these processes that, under the conditions specified above, could react violently, form harmful gases, contain cyanide or sulfide, or meet the DOT explosive definitions prescribed.

The material in this waste group does not meet the definition of reactivity as defined in 40 CFR 261.23. The material is stable and will not undergo violent chemical change. The material will not react violently with water, form potentially explosive mixtures with water, or generate toxic gases, vapors, or fumes when mixed with water. The material is not capable of detonation or explosive reaction. The material is not a forbidden explosive or Division 1.1, 1.2, or 1.3 (Class A or B) explosive as defined in 49 CFR 173, nor do the drums contain explosive materials. Explosives were not handled or used around radioactive material. Small volumes of cyanide, acrylonitrile (vinyl cyanide), thiocyanate, and sodium sulfide solution were added to the solidified laboratory waste stream on five occasions (11/13/73, 9/11/74, 2/2/78, 2/21/78, and 10/14/80). However, due to the solidified matrix of this waste, if exposed to pH conditions between 2 and 12.5, it should not generated toxic gases, vapors, or fumes in a quantity sufficient to present a danger to human health or the environment. The materials in this waste group are therefore not reactive wastes (D003).

3.2 Listed Determination

Waste is potentially subject to RCRA regulation as a hazardous waste if it meets a listing description. Wastes in this waste stream were derived from the solidification of aqueous wastes containing small quantities of halogenated- and non-halogenated-solvents, resulting in an F-listed hazardous waste. Trichloroethylene, 1,1,1 -trichloroethane, 1,1, 2-trichloro-1,2,2- trifluoroethane, and carbon tetrachloride were used primarily for cleaning and degreasing, and small quantities of these constituents may be present in the waste. Methanol, xylene, and toluene were used as solvents primarily in laboratory operations.

Solvents including carbon tetrachloride and Freon were used in laboratory analysis but were separated from the aqueous phase of the wastes prior to treatment. The aqueous phase would not be considered a spent solvent. Although a developer containing 1,1,1-trichloroethane was added to this waste, this developer was not used as a solvent. However, organic compounds such as 1,1,1-trichloroethane, carbon tetrachloride, and trichloroethene were commonly used for various cleaning activities on plant site. Since maintenance shops also generated liquid wastes that were added to Special Setups Sludge waste stream, it is possible that some amount of spent solvent was introduced into the solidification process. Therefore, Special Setups Sludge is assigned EPA HWNs F001 and F002.

Solvents such as methanol and xylene were also used in laboratory analysis. There is no documentation indicating that these solvents were added to the Special Setups Sludge waste stream. However, if the solvents were separated from the aqueous phase after analysis, the aqueous phase would not be considered a spend solvent. Solidification of aqueous waste containing these solvents has not been verified. Headspace gas analysis of Special Setups Sludge detected these solvents and also detected ethyl benzene. The source of ethyl benzene has not been identified, and it is assumed that ethyl benzene could have been introduced into the solidification process as a spent solvent. Therefore, Special Setups Sludge is assigned EPA HWN F003.

Large volumes of organic waste were not compatible with the bottle box solidification system that produced Special Setups Sludge. However, small amounts (4-8 liters) of organic solvents were added to the waste on several occasions. Spend solvent waste included electropolishing solution containing 2-ethoxyethanol from metallography laboratories and scintillation cocktail containing toluene from tritium analysis. Special Setups Sludge was derived from the treatment of these spent solvent wastes, and is therefore assigned EPA HWN F005.

The EPA HWNs assigned to the Special Setups Sludge waste stream and based on the above AK discussion, are listed in Table 3-1~~Table 3-1~~~~Table 3-1~~ for F-listed constituents.

Table 3-1. Listed HWNs assigned to Special Setups Sludge waste stream based on AK.

Hazardous Waste Number	Description	Constituents Causing Listing Using AK
F001	Spent halogenated solvents used in degreasing, spent solvent mixtures/blends used in degreasing (F001, F002, F004, F005 constituents), still bottoms from the recovery of spent solvents and spent solvent mixtures used in degreasing.	Trichloroethylene, 1,1,1-trichloroethane, carbon tetrachloride
F002	Spent halogenated solvents, spent solvent mixtures/blends (F001, F002, F004, F005), still bottoms from the recovery of these spent solvents and spent solvent mixtures.	Trichloroethylene, 1,1,1-trichloroethane, carbon tetrachloride, 1,1,2-trichloro-1,1,2-trifluoroethane
F003	Spent non-halogenated solvents, spent solvent mixtures/blends containing non-halogenated solvents and halogenated solvents (F001, F002, F004, F005), still bottoms from the recovery of these spent solvents and spent solvent mixtures.	Xylene, ethyl benzene, methanol
F005	Spent non-halogenated solvents, spent solvent mixtures/blends containing non-halogenated solvents and halogenated solvents (F001, F002, F004, F005), still bottoms from the recovery of these spent solvents and spent solvent mixtures.	Toluene

3.3 Additional WAP/Waste Acceptance Criteria (WAC) Characterization Data

The WAP and WAC require additional characterization to (a) verify the AK documented for this waste stream, and (b) support other WAP requirements. Included in this section are those intrusive and non-intrusive examinations and analyses conducted to ensure that the requirements for the disposal of waste in WAP were met, and confirm the AK hazardous waste determination.

3.3.1 Radionuclides

This section identifies the radioisotopes potentially contained in the waste. In addition, Table 3-2 summarizes matrix and other physical parameters that could affect radioassay.

Table 3-2. Waste Matrix Evaluation.

Parameter	Results of Evaluation
Radionuclide Form, Particle Size, and Distribution	Radionuclides will primarily be in the form of hydroxides because sodium hydroxide was used to neutralize the waste solution prior to solidification. Other radionuclide forms may include oxalate, citrate, and oxide (see Table 2-1).
Hydrogen Content	Sources of hydrogen may include plastic packaging material and small amounts of hydrocarbons (see Table 2-1). A few drums may contain free liquid or unhardened sludge.
Other Interfering Waste Contaminants	Radioassay interferences may include bromine, ammonium bifluoride, hydrofluoric acid, chromic acid, beryllium chloride, hydrochloric acid, cadmium nitrate, magnesium, and borate (see Table 2-1).
Physical Matrix Parameters	The distribution of waste contaminants should be relatively homogeneous because after the liquid was added to the cement mixture, it was placed on a drum roller to ensure mixing of the contents.

Aqueous waste treatment operations in Building 774 receive wastes from throughout plant site, including processes that generated low-level and non-radioactive liquid wastes. For this reason, wastes generated during treatment operations may contain any of the radioisotopes used at the plant. The most common radioactive materials handled were weapons-grade plutonium, americium-241, enriched uranium, and depleted uranium. The Special Setups Sludge waste will also contain other radioisotopes that were undesirable in the regular aqueous waste treatment system.

As was specified in Table 2-1, tritium, plutonium, americium, depleted uranium, enriched uranium, uranium-233, iron-55, neptunium-237, barium-133, strontium-90, and curium (no isotope specified) were introduced into the solidification process in liquid received or as sources from various

buildings. In addition, one logbook entry for waste from Building 126, which is a radioisotope storage area, is simply "isotopes" with no further detail.

The Size Reduction Vault in Building 776 conducted repackaging operations (prefixes 19 and 25). The package date on these drums is the date in which the waste was repackaged and was originally generated some time prior to this date. Therefore, it is assumed that the repacked containers could potentially contain any of the above radioisotopes. IDC 802 should not contain uranium-233 because uranium-233 was only handled until about 1982, and IDC 802 was not generated until about 1986.

Representative radionuclide data from the Special Setups Sludge waste stream drums have been compiled and are presented in Table 3-3 for completeness. The specific radionuclides, measured at the RWMC Stored Waste Examination Pilot Plant (SWEPP) facility, are listed and averages, standard deviations, and maximum/minimum values provided. Thermal power, total activity, total alpha activity, TRU concentrations, Pu equivalents and fissile gram (g) equivalent data have also been provided. These values are based on the measurement of 229 drums.

Table 3-3. Nondestructive assay determined radionuclides present in Special Setups Sludge waste stream.

Radionuclide	Average	Standard Deviation	Minimum	Maximum
Total Pu (g)	5.65E+01	5.51E+01	-1.34E-01	2.99E+02
Pu-238 (g)	5.93E-03	5.78E-03	-1.41E-05	3.14E-02
Pu-239 (g)	5.31E+01	5.18E+01	-1.26E-01	2.82E+02
Pu-240 (g)	3.23E+00	3.15E+00	-7.66E-03	1.71E+01
Pu-241 (g)	9.77E-02	9.52E-02	-2.32E-04	5.18E-01
Pu-242 (g)	2.43E-02	2.37E-02	-5.76E-05	1.29E-01
U-233 (g)	0.00E+00	0.00E+00	0.00E+00	0.00E+00
U-234 (g)	3.04E-03	3.67E-03	3.38E-04	1.23E-02
U-235 (g)	2.80E+00	3.43E+00	3.14E-01	1.15E+01
U-238 (g)	1.40E+02	6.14E+01	1.40E+02	1.40E+02
Am-241 (g)	1.24E-01	1.59E-01	-2.32E-04	1.47E+00
Thermal Power (W)	1.45E-01	1.38E-01	-3.36E-04	7.52E-01
Total Activity (Ci)	1.48E+01	1.43E+01	-3.48E-02	7.79E+01
Total Alpha Activity (Ci)	4.62E+00	4.40E+00	-1.07E-02	2.40E+01
TRU Concentration (nCi/g)	1.86E+04	1.72E+04	-3.90E+01	1.01E+05
Pu Curie Equivalent (Ci)	4.61E+00	4.39E+00	-1.07E-02	2.39E+01
Fissile Gram Equivalent (g)	5.36E+01	5.21E+01	-1.27E-01	2.83E+02

3.3.2 Complexing Agents

Liquid wastes containing complexing agents were treated in the process producing Special Setups Sludge. Complexing agents interfered with the first and second stage aqueous waste treatment systems in Building 774. The complexing agents in the Special Setups Sludge waste stream include Versene (a trade name for ethenediaminetetraacetic acid [EDTA]), tetraphosphoric acid, tributyl phosphate, citrate, oxalic acid, sodium lignosulfonate, and americium oxalate.

3.3.3 Real-Time Radiography/Visual Examination (VE)

All drums are physically characterized using real-time radiography (RTR). A statistically selected portion of this waste stream has been characterized through VE. These examinations provide confirmation that the waste consists of sludge, that the packaging is appropriate, and that there are no

prohibited items within the waste. The RTR and VE results for this waste stream have confirmed AK expectations of no free liquids.

4. CONFIRMATION OF HAZARDOUS WASTE NUMBER ASSIGNMENTS BASED ON HEADSPACE GAS SAMPLING AND HOMOGENOUS SOLIDS ANALYSIS

4.1 Headspace Gas Sampling and Analysis Results

The headspace analysis results for spent solvents have been assessed per the requirements in the WAP. Results of the WAP compliant headspace gas analyses for seven drums are summarized in Table 4-1~~Table 4-1~~~~Table 4-1~~. Based on the results given in Table 4-1~~Table 4-1~~~~Table 4-1~~, one F-listed volatile organic solvent exceeded the program-required quantitation limit (PRQL) at the 90%-confidence level. The UCL_{90} value for methanol was 4648 ppmv. The F003 code for this compound had already been added based on AK information (see Table 3-1~~Table 3-1~~~~Table 3-1~~). In addition, the occurrences of tentatively identified compounds (TICs) were evaluated. One TIC listed in Appendix VIII 40 CFR Part 261and Appendix IX 40 CFR Part 264 was detected, but this is at a frequency much less than the 25% frequency requirement; therefore, no HWNs were assigned based on TICs. The identified TIC, 1,4-dioxane, is a common contaminant found in chlorinated solvents such as 1,1,1-trichloroethane, which was widely used on the site as discussed in 3.2.

Table 4-1. Special Setups Sludge waste stream HSG summary data.

Analyte	Number of samples	Number of samples above MDL[ab]	Mean (ppmv)	Standard deviation (ppmv)	Maximum concen. (ppmv)	UCL_{90} (ppmv)	PRQL (ppmv)	EPA HW N
1,1,1-Trichloroethane	7	4	55.7	134	360	166	10	N/A
1,1,2,2-Tetrachloroethane	7	0	0.144	0.220	0.495	[c]	10	N/A
1,1,2-Trichloro-1,2,2-trifluoroethane	7	0	0.417	0.640	1.45	[c]	10	N/A
1,1-Dichloroethane	7	4	1.70	3.20	8.80	4.32	10	N/A
1,1-Dichloroethylene	7	2	0.815	0.975	2.35	2.94	10	N/A
1,2,4-Trimethylbenzene	7	3	0.225	0.276	0.650	0.525	10	N/A
1,2-Dichloroethane	7	0	0.263	0.402	0.900	[c]	10	N/A
1,3,5-Trimethylbenzene	7	3	0.197	0.245	0.600	0.463	10	N/A
Acetone	7	3	2.03	1.52	4.30	3.68	100	N/A
Benzene	7	5	0.541	0.298	0.900	0.746	10	N/A
Bromoform	7	0	0.101	0.155	0.350	[c]	10	N/A
Butanol	7	6	3.86	4.57	12.0	6.61	100	N/A
Carbon tetrachloride	7	1	0.245	0.293	0.650	[c]	10	N/A
Chlorobenzene	7	0	0.263	0.402	0.900	[c]	10	N/A

Table 4-1. (continued).

Analyte	Number of samples	Number of samples above MDL[a,b]	Mean (ppmv)	Standard deviation (ppmv)	Maximum concen. (ppmv)	UCL_{90} (ppmv)	PRQL (ppmv)	EPA HW N
Chloroform	7	0	0.278	0.426	0.950	[c]	10	N/A
cis-1,2-Dichloroethylene	7	0	0.364	0.556	1.25	[c]	10	N/A
Cyclohexane	7	5	28.5	53.2	140	64.9	10	N/A
Ethyl benzene	7	4	0.291	0.267	0.700	0.510	10	N/A
Ethyl ether	7	0	0.951	1.46	3.30	[c]	10	N/A
Methanol	7	6	3414	2047	5500	4648	100	N/A
Methyl ethyl ketone	7	3	0.758	0.960	2.30	1.80	100	N/A
Methyl isobutyl ketone	7	3	0.432	0.415	0.990	0.885	100	N/A
Methylene chloride	7	1	0.941	1.27	2.95	[c]	10	N/A
Tetrachloroethylene	7	0	0.186	0.285	0.650	[c]	10	N/A
Toluene	7	5	3.12	2.26	7.70	4.67	10	N/A
Trichloroethylene	7	3	2.76	2.78	7.90	5.78	10	N/A
m&p-Xylene	7	4	0.604	0.518	1.35	1.03	10	N/A
o-Xylene	7	3	0.299	0.295	0.750	0.620	10	N/A

Did the data verify the Acceptable Knowledge? Yes X No ____

If no, describe the basis for assigning the EPA HWNs.

a. When a measurement is reported as below detection, one-half the analysis method detection limit (MDL) is used. Note that the MDL for a given analyte may vary from sample to sample.
b. Method Detection Limit (MDL)
c. The mean and standard deviation presented are the mean and standard deviation of the method detection limits (after dividing by 2) since all measurements (or all but one) are below detection. Therefore, there are no degrees of freedom associated with the t statistic and the upper 90% confidence limit cannot be calculated.

4.2 Preliminary Data

Preliminary Special Setups Sludge waste stream data generated under the QAPP and prior to the final WAP has been assessed. Per the WAP, preliminary data provides an estimate of additional sampling required to characterize a waste stream. The preliminary data assessed in this section is used to determine the WAP compliant sample size to complete characterization of this waste stream.

The data assessed in this section has received WAP compliant project level validation and verification reviews. Due to the fact that the data was generated under the QAPP, there are administrative anomalies present that do not affect data quality (for example, missing "Z" flags if metals were present at more than four times the spiking matrix spike levels). Therefore, the data has been accepted for use as preliminary data unless the data was generated significantly after holding times expired. Various

nonconformance reports (NCRs) were generated on this data, however, if dispositions did not reject the data, the data were utilized "as-is". In each area matrix spike (MS)/matrix spike duplicate (MSD), surrogate, and laboratory control sample (LCS) performance was evaluated. In the following sections an assessment summary of the preliminary data is given. This summary discusses overall data usability and identifies any potential bias in the numbers that are reported. A more detailed data use assessment of the preliminary data is given in Appendix A.

In Appendix A, precision and accuracy performance indicators are addressed individually in the following sub-sections by analytical method, such as, metals, semi-volatile organic compounds (SVOCs), total VOCs, and non-halogenated (NH) VOCs. The indicators include: LCS, MS, MSD, and surrogates (where applicable). Recoveries were complied and average recoveries calculated by analyte as well as relative percent differences (RPDs), as appropriate. Error bars associated with the recovery averages were set at one standard deviation. This data is provided in tables and figures in the following.

4.2.1 Preliminary Metals Data Assessment Summary

Relative to the characteristic metals, these results indicate that the preliminary data generated on the Special Setups Sludge waste stream (IDCs 004 and 802) can be used to evaluate future sampling needs and/or application of waste HWNs to support a waste stream profile. The LCS data indicate that the laboratory methods were in control and any biases were due to matrix effects. These results reinforce the AK expectations relative to the presence of metals in this waste stream.

The data user should take into account the caveats associated with the preliminary non-toxicity characteristic (TC) metals results. The WAP compliant data is in agreement with the preliminary data for the non-TC elements. In general, the data are acceptable for use as preliminary data.

4.2.2 Preliminary SVOC Assessment Summary

Based on the performance of the matrix dependent (MS/MSD and surrogates) and non-matrix dependant (LCS) indicators, the data are acceptable for use as preliminary data to assess additional sampling requirements and formulate impact to the waste stream profile.

The performance of all surrogates, nitrobenzene-d5 (NBZ), 2-fluorobiphenyl (FBP), 2-fluorophenol (2FP), and 2,4,6-tribromophenol (TBP), were acceptable. Individual surrogate data points are plotted in Appendix C, Figures SV-3 through SV-6. Three-sigma (3-σ) limits, specific to this waste stream (versus the limits determined over time by the laboratory spanning different waste streams), are reflected on each of the graphs. This provides a picture of surrogate performance specific to the Special Setups Sludge waste stream (IDCs 004 and 802), i.e., the acceptance criteria is based solely on data from this waste stream, confirming that these data are appropriate for use as preliminary data. These data also reflect the fact that the laboratory methods performed consistently.

The LCS average recoveries were within the WAP accuracy criteria, demonstrating that the laboratory methods were in control. The performance of the MS/MSDs also indicates that matrix effects did not adversely affect data results. The average MS/MSD recoveries were all within WAP criteria except for pentachlorophenol. This compound did not recover at all, but was only used as a spike compound in one batch. All of the averaged RPDs met WAP criteria except for pentachlorophenol (no RPD could be calculated). The data indicate that phenols in general have a negative bias due to matrix effects. For details, see Appendix A, Section A-2.1.

4.2.3 Preliminary Purgeable VOC Assessment Summary

The performance of all surrogates, 1,2-dichloroethane-d4 (DCA), toluene-d8 (TOL) and 4-bromofluorobenzene (BFB), were acceptable.

Individual surrogate data points are plotted in Figures V-3 through V-5. Three-sigma (3-σ) limits, specific to this waste stream (versus the limits determined over time by the laboratory spanning different waste streams), are reflected on each of the graphs. This provides a picture of surrogate performance specific to the Special Setups Sludge waste stream (IDCs 004 and 802), i.e., the acceptance criteria are based solely on data from this waste stream, confirming that these data are appropriate for use as preliminary data. These data also reflect the fact that the laboratory methods performed consistently.

It should be noted that the MS/MSD performance was acceptable and did not reflect any bias for this waste stream. Headspace gas data will be used to provide additional insight on VOCs to enhance the waste stream profile. These data are discussed elsewhere in this report.

The UCL_{90} values could not be determined for the purgeable VOCs (see Table 4-2) with the exception of carbon tetrachloride whose UCL_{90} exceeded the RTL. Upon review of these UCL_{90} values, application of D-codes for purgeable VOCs is not appropriate based on the preliminary data as the listed HWN, F001, for this compound was previously applied by AK and will not be removed.

4.2.4 Preliminary NH VOC Data Assessment

Based on the acceptable performance of the MS/MSD, except for the matrix induced effect on methanol and the slight negative bias for ethyl ether, and LCS indicators, the preliminary NH VOC sample data are usable for the preliminary assessment of this waste stream relative to additional sampling requirements. The AK assigned F003 code for methanol was confirmed by the solids analyses and will not be removed from this waste stream.

The UCL_{90} value could not be determined for the non-halogenated VOCs (see Table 5-1) due to lack of detection of NH VOC compounds. No additional HWNs should be assigned based on the preliminary NH VOC data.

4.2.5 Preliminary Data TIC Assessment

The WAP requires that TICs exceeding the 25% WAP criteria and are listed in RCRA Part 261 Appendix VIII list will be compared to AK data to determine if the TIC is a listed compound There were no TICs detected that met both conditions. One TIC listed in Appendix VIII 40 CFR Part 261and Appendix IX 40 CFR Part 264 was detected, but this is at a frequency much less than the 25% frequency requirement; therefore, no HWNs were assigned based on TICs. The identified TIC, 1,4-dioxane, is a common contaminant found in chlorinated solvents such as 1,1,1-trichloroethane which was commonly used at the generators site.

4.2.6 TSCA Assessment

The AK indicates that there is no reason to suspect that polychlorinated biphenyls (PCBs) will be present in this waste stream. The AK history for IDCs 004 and 802 reveals that only materials contaminated with RCRA hazardous constituents were solidified.

4.2.7 Preliminary Data Results and Sample Size

The results of preliminary data are summarized in Table 4-2~~Table 4-2~~~~Table 4-2~~. Table 4-2~~Table 4-2~~~~Table 4-2~~ also identifies the number of drums to be sampled. The sample size calculation performed did not include contaminants associated with spent solvent EPA HWNs. If the solvent code was already applied to the waste stream as part of the AK evaluation (because solvent codes are listed codes), the code/HWN remains with the waste stream. Therefore, additional sampling is required to confirm the EPA HWNs assignment for spent solvent contaminants. In addition, if a toxicity code had been assigned based on AK the sample size was not determined. The INEEL will assign the HWN. Based on the results given in Table 4-2~~Table 4-2~~~~Table 4-2~~, five drums require coring to confirm preliminary results. The summary statistics of non-toxic characteristic target analytes are given in **Error! Reference source not found.**.

Table 4-2 Special Setups Sludge waste stream: statistical analysis of preliminary toxicity characteristic data.

	Analyte	Number of drums sampled	Number of drums with detects above MDL[a]	Minimum (mg/kg)	Maximum (mg/kg)	Mean (mg/kg)	Standard deviation (mg/kg)	UC 90%[b]	RTL/PRQL[c] (mg/kg)	Potential Toxicity characteristic EPAWN	Assigned HWN (per AK or HSG data)	WAP compliant sample size
VOCs	1,1-Dichloroethylene	5	0	0.5	0.6	0.547	0.042		14	D029		5
	1,2-Dichloroethane	5	0	0.5	0.6	0.547	0.042		10	D028		5
	Benzene	5	0	0.5	0.6	0.547	0.042		10	D018		5
	Carbon tetrachloride	5	4	0.5	21.5	6.21	8.68	13.3	10	D019	F001	-
	Chlorobenzene	5	0	0.5	0.6	0.547	0.042		2000	D021		5
	Chloroform	5	0	0.5	0.6	0.547	0.042		120	D022		5
	Methyl ethyl ketone	8	0	1.03	1.43	1.16	0.122		4000	D035		5
	Pyridine	8	0	1.13	1.48	1.29	0.138		100	D038		5
	Tetrachloroethylene	5	0	0.5	0.6	0.547	0.042		10	D039		5
	Trichloroethylene	5	0	0.5	0.6	0.547	0.042		10	D040	F001/F002	-
	Vinyl chloride	5	0	0.5	0.6	0.547	0.042		4	D043		5
SVOCs	1,4-Dichlorobenzene	7[d]	0	0.12	0.12	0.12	0		150	D027		5
	2,4-Dinitrotoluene	7[d]	0	0.105	0.11	0.107	0.003		2.6	D030		5
	Cresols	7[d]	1	0.1	0.225	0.123	0.045		4000	D026		5
	Hexachlorobenzene	7[d]	0	0.1	0.115	0.109	0.008		2.6	D032		5
	Hexachloroethane	7[d]	0	0.11	0.14	0.127	0.016		60	D034		5
	Nitrobenzene	7[d]	0	0.11	0.14	0.127	0.016		40	D036		5
	Pentachlorophenol	7[d]	0	0.095	0.19	0.149	0.051		2000	D037		5
Metals	Ag	8	7	0.135	31	5.89	10.5	11.6	100	D011		5
	As	8	8	4.3	14	8.68	3.44	10.4	100	D004		5
	Ba	8	8	200	360	249	51.3	275	2000	D005		5
	Cd	8	8	0.85	3.7	2.29	1.14	2.86	20	D006		5
	Cr	8	8	25	60	37.4	10.6	42.7	100	D007		5
	Hg	8	0	0.075	0.145	0.101	0.036		4	D009		5
	Pb	8	8	4.1	14	8.29	3.1	9.85	100	D008		5
	Se	8	2	0.6	2.9	1.16	0.805	2.91	20	D010		5

a. When a measurement is reported as below detection, one-half the analysis method detection limit (MDL) is used. Note that the MDL for a given analyte may vary from sample to sample.

b. The mean and standard deviation presented are the mean and standard deviation of the method detection limits (after dividing by 2) since all measurements (or all but one) are below detection. Therefore, there are no degrees of freedom associated with the t statistic and the upper 90% confidence limit cannot be calculated.

c. For toxicity characteristic wastes, the TC limit expressed as the Regulatory Threshold Limit (RTL) is used. For listed wastes, the Program Required Quantitation Limit (PRQL) is used.

d. If the MDL exceeded the RTL (affecting one data point), that data was not used to calculate the statistical parameters.

5. PHASE II WAP COMPLIANT DRUM ANALYSIS/CONFIRMATION OF HAZARDOUS WASTE NUMBERS ASSIGNED

Based on the results given previously in Table 4-2, five drums required coring. Three randomly selected drums from the Special Setups Sludge waste stream have been cored and analyzed (provided previously in Table 1-1) in accordance with the WAP. These drums were randomly selected from the entire waste stream. The final mean, standard deviation and the UCL_{90} for the mean concentration for each contaminant has been determined and is reported in Table 5-1. As shown in Table 5-1, the solidified data results agreed well with the preliminary data and AK. The sample size determination is less than the sample size determined with the preliminary data; therefore it is clearly acknowledged that additional sampling is required for this waste stream prior to final HWN assignment and characterization.

5.1 Phase II Metals Data Assessment

No metals were detected at concentrations that were near or exceeded the RTL. No HWNs will be assigned based on WAP compliant sampling and analysis (see Table 5-1, footnote b). This is consistent with AK. To finalize the characterization of this waste stream, a total of five WAP compliant samples would need to be sampled and analyzed using WAP compliant procedures. Upon the validation and verification of the additional samples (a minimum of two waste containers), a final HWN assessment could be performed.

5.2 Phase II SVOC Data Assessment

The UCL_{90} value could not be determined for toxicity NH VOCs. No HWNs will be assigned based on WAP compliant sampling and analysis (see Table 5-1). To finalize the characterization of this waste stream, five samples would need to be sampled and analyzed using WAP compliant procedures. Upon the validation and verification of the additional samples (a minimum of two waste containers), a final HWN assessment could be performed.

5.3 Phase II Purgeable VOC Assessment

No purgeable VOC data exist for the Phase II samples because the holding times were exceeded before the samples were extracted. No HWN will be assigned based on the lack of WAP compliant sampling and analysis. To finalize the characterization of this waste stream, five samples would need to be sampled and analyzed using WAP compliant procedures. Upon the validation and verification of the additional samples (a minimum of five waste containers), a final HWN assessment could be performed.

5.4 Phase II NH VOC Assessment

The UCL_{90} value could not be determined for toxicity NH VOCs. No HWNs will be assigned based on WAP compliant sampling and analysis (see Table 5-1). To finalize the characterization of this waste stream, five samples would need to be sampled and analyzed using WAP compliant procedures. Upon the validation and verification of the additional samples (a minimum of two waste containers), a final HWN assessment could be performed.

Table 5-1. WAP compliant Phase II statistical data analysis for Special Setups Sludge waste stream.

	Analyte	Number of samples	Number of samples above MDL[a]	Minimum (mg/kg)	Maximum (mg/kg)	Mean (mg/kg)	Standard deviation (mg/kg)	Upper 90% confidence limit (mg/kg)	RTL/PRQL (mg/kg)[c]	Toxicity characteristic contaminant code	AK HWN assigned	WAP compliant sample size[d]
VOCs	1,1-Dichloroethylene	0[e]	0						14	D029		5
	1,2-Dichloroethane	0[e]	0						10	D028		5
	Benzene	0[e]	0						10	D018		5
	Carbon Tetrachloride	0[e]	0						10	D019	F001	-
	Chlorobenzene	0[e]	0						2000	D021		5
	Chloroform	0[e]	0						120	D022		5
	Methyl Ethyl Ketone	3	0	1.03	1.15	1.08	0.066	[b]	4000	D035		5
	Pyridine	3	0	1.35	1.48	1.41	0.063	[b]	100	D038		5
	Tetrachloroethylene	0[e]	0						10	D039		5
	Trichloroethylene	0[e]	0						10	D040	F001/F002	-
	Vinyl Chloride	0[e]	0						4	D043		5
SVOCs	1,4-Dichlorobenzene	3	0	0.120	0.120	0.120	0	[b]	150	D027		5
	2,4-Dinitrotoluene	3	0	0.110	0.110	0.110	0	[b]	2.6	D030		5
	Cresols	3	0	0.100	0.100	0.100	0	[b]	4000	D026		5
	Hexachlorobenzene	3	0	0.100	0.100	0.100	0	[b]	2.6	D032		5
	Hexachloroethane	3	0	0.110	0.110	0.110	0	[b]	60	D034		5
	Nitrobenzene	3	0	0.110	0.110	0.110	0	[b]	40	D036		5
	Pentachlorophenol	3	0	0.095	0.095	0.095	0	[b]	2000	D037		5
Metals	Ag	3	2	0.135	8.80	3.35	4.75	13.7	100	D011		5
	As	3	3	9.30	14.0	11.8	2.36	14.3	100	D004		5
	Ba	3	3	200	240	223	20.8	246	2000	D005		5
	Cd	3	3	2.30	3.40	2.73	0.586	3.37	20	D006		5
	Cr	3	3	25.0	60.0	41.3	17.6	60.5	100	D007		5
	Hg	3	0	0.145	0.145	0.145	0	[b]	4	D009		5
	Pb	3	3	7.90	14.0	10.6	3.10	14.0	100	D008		5
	Se	3	0	0.900	0.950	0.933	0.029	[b]	20	D010		5

a. When a measurement is reported as below detection, one-half the analysis method detection limit (MDL) is used. Note that the MDL for a given analyte may vary from sample to sample.

b. The mean and standard deviation presented are the mean and standard deviation of the method detection limits (after dividing by 2) since all measurements (or all but one) are below detection. Therefore, there are no degrees of freedom associated with the t statistic and the upper 90% confidence limit cannot be calculated.

c. For toxicity characteristic wastes, the TC limit expressed as the Regulatory Threshold Limit (RTL) is used. For listed wastes, the Program Required Quantitation Limit (PRQL) is used.

d. When all measurements for an analyte are below the detection level, the minimum sample size of five is used.

e. No samples were analyzed for the VOC compounds for Phase II samples due to exceeded holding times.

6. SUMMARY/RECOMMENDATIONS

The preliminary data were assessed using matrix-dependant performance indicators (that is, MS/MSDs [recoveries and RPDs] and surrogates, and LCS data that are matrix independent). The MS/MSD and LCS recovery data were compiled, averages calculated, and error bars established. These averages and associated error bars were compared to the WAP criteria.

Matrix effects were reflected in preliminary solids data by a general negative bias for phenolic compounds in the MS/MSD and surrogate recoveries in SVOC data (pentachlorophenol recovery. Neither the NH-VOC nor the purgeable VOC performance indicators reflected bias due to matrix effects.

The LCS data, indicative of analytical process control, were acceptable for all target analytes. Existing NCRs for the Special Setups Sludge waste stream were considered, and if the dispositions allowed, the data were used "as is." No new NCRs were prepared since any problems encountered did not technically affect data use. The data associated with NCRs that rejected data were not used.

Based on this assessment of the data, it was determined that the data were appropriate for use in evaluating the assignment of preliminary HWNs and any negative bias had no effect on the characterization of the waste. The Phase II portion of the preliminary data does not meet the conditions of the "required samples" as defined (described) in the WAP. Additional samples are required to further confirm the EPA HWN assignments for this waste stream.

The HWNs for all organic compound constituents assigned by AK were retained. Final preliminary assignment of all HWNs for this waste stream are summarized in Table 5.1. The final assignment of all HWNs will be reflected in the waste stream profile once additional samples have been collected, analyzed, validated and verified according to the WAP.

6.1 Other Target Analytes

For completeness, the summary statistics of the other preliminary target analytes are presented in Table 6-1.

Table 6-1. Special Setups Sludge waste stream summary statistics for analytes without regulatory thresholds.

	Analyte	Number of samples	Number of samples above MDL[a]	Minimum (mg/kg)	Maximum (mg/kg)	Mean (mg/kg)	Standard deviation (mg/kg)	UCL_{90} (mg/kg)
VOCs	1,1,1-Trichloroethane	0[b]						[c]
	1,1,2,2-Tetrachloroethane	0[b]						[c]
	1,1,2-Trichloro-1,2,2-trifluoroethane	0[b]						[c]
	1,1,2-Trichloroethane	0[b]						[c]
	Acetone	3	0	1.48	1.60	1.53	0.066	[c]
	Bromoform	0[b]						[c]
	Butanol	3	0	0.750	0.825	0.775	0.043	[c]
	Carbon disulfide	0[b]						[c]
	Ethyl ether	3	0	1.35	1.48	1.39	0.072	[c]
	Ethylbenzene	0[b]						[c]
	Isobutanol	3	0	1.25	1.33	1.28	0.043	[c]
	m&p-Xylene	0[b]						[c]
	Methanol	3	3	465	2100	1488	892	2459
	Methylene chloride	0[b]						[c]
	o-Xylene	0[b]						[c]
	Toluene	0[b]						[c]
	Trichlorofluoromethane	0[b]						[c]
SVOCs	2,4-Dinitrophenol	3	0	0.105	0.105	0.105	0	[c]
	ortho-Dichlorobenzene	3	0	0.120	0.120	0.120	0	[c]
Metals	Be	3	3	0.810	5.70	2.48	2.79	5.52
	Ni	3	3	25.0	61.0	37.3	20.5	59.7
	Sb	3	2	0.550	2.10	1.32	0.775	3
	Tl	3	1	0.700	1.40	0.933	0.404	[c]
	V	3	3	110	180	143	35.1	182
	Zn	3	3	55.0	75.0	67.7	11.0	79.7

a. When a measurement is reported as below detection, one-half the analysis method detection limit (MDL) is used. Note that the MDL for a given analyte may vary from sample to sample.

b. No samples were analyzed for the VOC compounds for Phase II samples due to exceeded holding times.

c. The mean and standard deviation presented are the mean and standard deviation of the method detection limits (after dividing by 2) since all measurements (or all but one) are below detection. Therefore, there are no degrees of freedom associated with the t statistic and the upper 90% confidence limit cannot be calculated.

7. REFERENCES

DOE/Low-Level Waste (LLW)-2 17, *DOE Waste Treatability Group Guidance.*

EDF-922, "Identification of Transuranic Waste Streams."

EDF-XXXX, "Waste Stream Summary Sheet – Special Setups Sludges/Solidified Laboratory Waste."

Environmental Protection Agency (EPA), "Test Methods for Evaluating Solid Waste, Physical and Chemical Methods," No. SW-846.

EPA WIPP Part B Permit, No. NM4890139088, February 4, 2002.

INEL-96/0280, *Acceptable Knowledge (AK) Document for INEEL Stored Transuranic Waste Rocky Flats Plant Waste,* Revision 2.

MCP-2525, "Drum Core Sample Plan." (Inactive)

Rocky Flats Environmental Technology Site, *Backlog Waste Reassessment Baseline Book,* PADC-1995-01082, May 16, 2000.

PLN-187, "INEEL Analytical Chemistry Laboratory Implementation Plan for the Transuranic Waste Characterization Implementation Plan," Revisions 0, 1, and 2. (Inactive)

PLN-600, "Analytical Laboratory Department Quality Assurance Plan for the Transuranic Waste Characterization Program."

RWMC-EDF-363, "Description of the SWEPP Certified Waste Sampling Program."

RWMC EDF-803, "Chemical Constituents in Transuranic Storage Area (TSA) Waste."

RWMC-EDF-805R1, "Matrix Parameter Category Groups."

RWMC EDF-909, "Transuranic Waste Sampling Plan for the Idaho National Environmental and Engineering Laboratory," Revision 3.

8. APPENDICES

Appendix A – Detailed Preliminary Data Assessment

Appendix B – Metals Back-up Data

Appendix C – Semi-volatile Organic Compound Back-up Data

Appendix D – Volatile Organic Compound Back-up Data

Appendix E – Non-halogenated Volatile Organic Compound Back-up Data

Appendix A

Detailed Preliminary Data Assessment

Detailed Preliminary Data Assessment

Preliminary data generated under the Quality Assurance Program Plan (QAPP) and prior to the final Waste Analysis Plan (WAP) have been assessed. Per the WAP, preliminary data may be used to assess the application of hazardous waste numbers (HWNs). The waste stream addressed by this preliminary data is the Special Setups Sludge waste stream, (item description codes [IDCs] 004 and 802).

Preliminary data were generated using the same SW-846 methods currently acceptable under the WAP compliant data. Precision and accuracy performance indicators are addressed individually in the following sub-sections by analytical method, such as, metals, semi-volatile organic compounds (SVOCs), total volatile organic compounds (VOCs), and non-halogenated (NH) VOCs. The indicators include matrix independent, such as, laboratory control samples (LCS) and matrix dependent performance indicators, that is, matrix spikes (MS), matrix spike duplicates (MSDs) and surrogates (where applicable). Recoveries were compiled and average recoveries calculated by analyte as well as relative percent differences (RPDs) as appropriate. Error bars associated with the recovery averages were set at one standard deviation (SD). These data are provided in tables and figures throughout Appendices A through E.

A-1. PRELIMINARY METALS DATA: DATA USE ASSESSMENT

As expected, no metals were detected at significant quantities throughout the preliminary data set associated with this waste stream. The data have been assessed from a waste stream perspective, that is, waste stream averages for the performance indicators were assessed for overall use of the data. Data results for individual elements whose averages and associated error indicated a potential bias are discussed individually and compared to acceptable knowledge (AK) expectations wherever possible.

The MS/MSD and LCS results discussed are summarized using a combination of tables and graphs. Figure M-1 depicts the average percent recoveries of each element for the MS/MSD pairs. The RPD for the MS/MSDs are included. The LCS results are illustrated in Figure M-2 and summarized in Table M-1. The data used to generate these graphs are presented by element in Table M-2. A SD was determined and an error bar tied to each average data point.

The detailed Quality Control (QC) data by element are provided in Appendix B, Table B-1 for the MS/MSD and LCS data. This summary allows a quick view of all the data associated with each element.

Elements that reflected problems from a waste stream average perspective are discussed in Section A-1.1, first, from the matrix effects indicated, and second from a laboratory control perspective. Data use conclusions are included where appropriate.

A-1.1 Preliminary Metals Data: Matrix Spike/Matrix Spike Duplicate Data Assessment

Table M-1 reflects the calculated averages (herein referred to as the waste stream average) with the associated error, and RPDs associated with the MS/MSD results by element. Three MS/MSD pairs, or six data points, were used to calculate these averages. While MS/MSDs were run for every batch, which meets the WAP criteria, the MS/MSDs from solidified wastes other than IDCs 004 or 802 were also considered in this assessment. The data and associated error bars are represented in Figure M-1 by element, with the WAP acceptance limits indicated. Figure M-1 includes the acceptance limits for both recovery and RPD. Note that if the average RPD is below the acceptance limit shown on the graph, the data meet RPD criteria. Elements that, based on the MS/MSD average recoveries and/or associated error bars, do not meet the WAP criteria are discussed individually below. The base assumption is a bias is indicated if either the average or the error bar falls outside the WAP limits.

Table M-1. Analytical Chemistry Laboratory metals quality control average percent recovery of MS/MSDs.

Element	MS/MSD (% Recovery)	MS/MSD %R Standard Deviation	MS/MSD Data Points (n)	RPD	RPD Data Points (n)
Sb	55.1	22.8	6	22.0	3
As	102.5	5.1	6	5.7	3
Ba	97.9	5.2	6	3.4	3
Be	98.2	3.3	6	7.2	3
Cd	88.3	5.3	6	5.4	3
Cr	88.1	20.6	6	16.1	3
Pb	100.8	8.6	6	5.2	3
Hg	71.6	30.2	6	21.4	3
Ni	90.7	13.1	6	14.0	3
Se	99.7	4.1	6	4.1	3
Ag	96.0	12.1	6	11.9	3
Tl	67.1	17.1	6	16.5	3
V	97.2	11.2	6	4.6	3
Zn	123.3	108.3	6	41.6	3

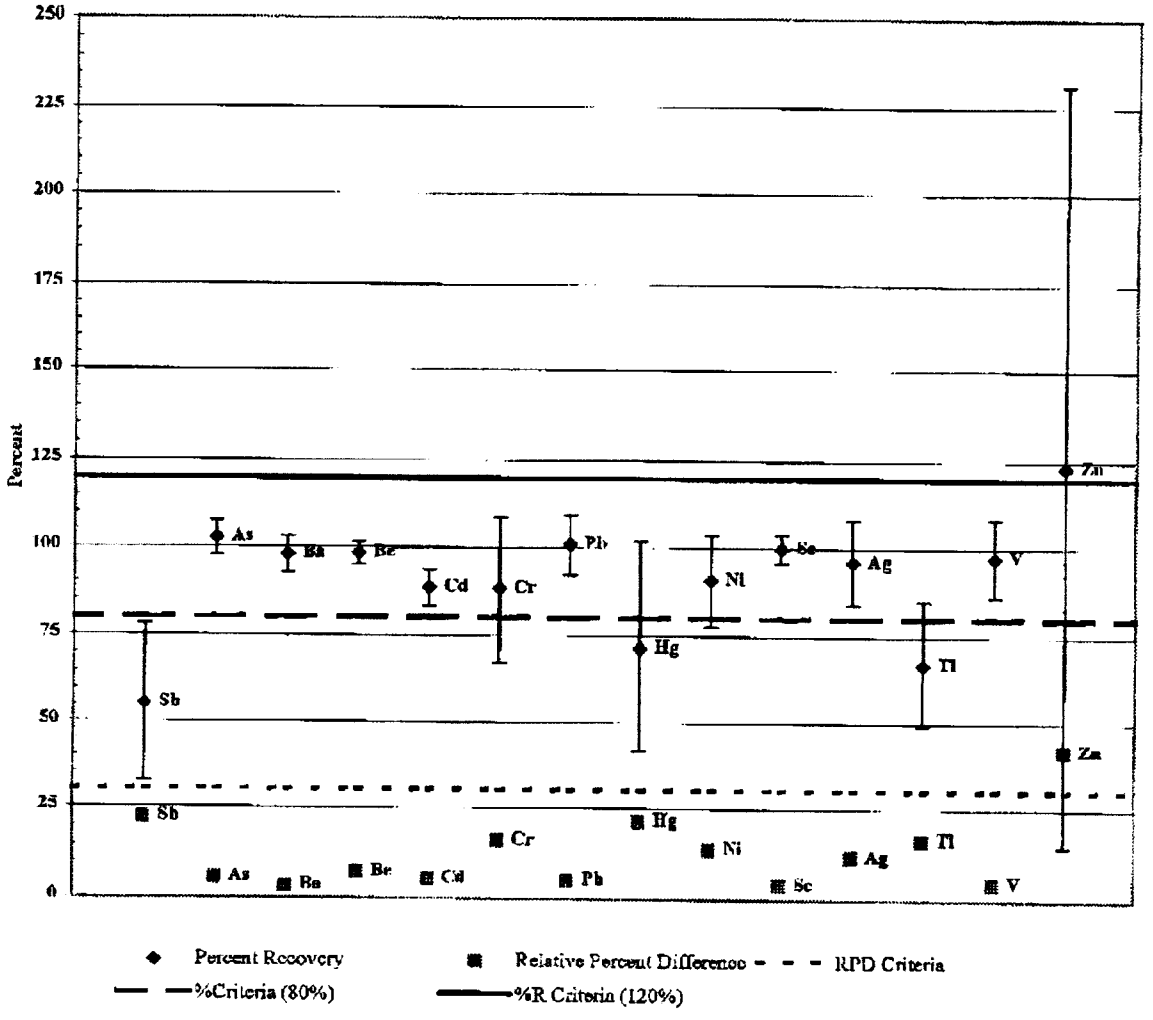

Figure M-1. Average percent recovery and RPD of MS/MSDs for metals analyses.

Antimony (Sb), which is not a toxicity characteristic (TC) element, is negatively biased (see Figure M-1). As shown, the waste stream MS/MSD average and both upper and lower error bars fall below the WAP acceptance criteria. Analysis of this element is difficult and recovery problems are not an uncommon occurrence. The summarized data in Appendix B, Table B-1 for Sb reflects that this element is problematic for all batches (ACL97021M, ACL97022M, ACL99004M). The Sb data has a 5-45% negative bias due to the matrix effects. However, because this element does not affect the characterization of this waste stream from a waste stream profile perspective (such as force the consideration of a Resource Conservation Recovery Act [RCRA] code addition), no further discussion is necessary.

Chromium (Cr) MS/MSD data average was recovered within the WAP criteria; however, the lower error bar falls outside the lower limit indicating a potential 0-15% negative bias. The mean concentration of Cr in the waste stream is approximately one half of the regulatory threshold limit (RTL) and the maximum value detected in the preliminary data sample set for this waste stream is less than the TC limit. Based on this preliminary data and AK, the D007 code should not be added

Mercury (Hg) MS/MSD data indicates a negative bias (see Figure M-1). As shown, the waste stream MS/MSD average and the lower error bar fall below the WAP acceptance criteria. The Hg data has a potential 0-30% negative bias due to matrix effects. The data average is likely indicative of the concentration of mercury in this waste stream based on this matrix dependent performance indicator. Since the average concentration of Hg is below the RTL by approximately two orders of magnitude, the bias applied due to matrix effects is that of a conservative nature. Therefore, there is no negative impact on the data use and the D009 code should not be applied.

Nickel (Ni) is not a TC element. The average MS/MSD recovery is within the WAP criteria, but the error bar falls below the low end of the limit. A slight negative bias, approximately 0-5%, is indicated. Since this element is not a TC element, this matrix induced negative bias should have no negative impact on data use.

The average recovery and the lower end of the error bar for thallium (Tl) fall below the WAP criteria, thus indicating a 0-30% negative bias due to matrix effects. However, because this element does not affect the characterization of this waste stream from a waste stream profile perspective (such as, for the consideration of a RCRA code addition), no further discussion is necessary.

Zinc (Zn) MS/MSD data indicate a fairly large variance for this waste stream as demonstrated by the errors bars that extend outside the WAP criteria on both the high and low ends of the range. Also, the average recovery for Zn exceeds the WAP criteria by approximately 5% indicating a potential positive bias. This is due to the fact that the MS/MSD recoveries for Zn in one batch (ACL99004M) exhibited inhomogeneity of the sample matrix. Since Zn is not a TC element and the positive bias would be conservative in nature, no further discussion is necessary.

As reflected Figure M-1, the RPD averages meet the WAP precision criteria for every element except for Zinc. The average RPD for this analyte demonstrated a potential positive bias approximately 10% for the precision of this waste stream. This outlier is due to one data set (ACL99004M) that exceeded the 30% RPD criteria due to the inhomogeneity of a sample matrix. Since Zinc is not a TC element and the positive bias would be conservative in nature, no further discussion is necessary.

A-1.2 Preliminary Metals Data: Laboratory Control Sample Assessment

The WAP, Table B3-8 footnote b, allows the laboratory to establish acceptance criteria for solidified waste LCSs. That is to say that solid LCS samples are not held to the ± 20% criteria. While Figure M-2 uses the + 20% criteria for result comparison purposes, this figure must be interpreted carefully. Every LCS result generated by the laboratory for this preliminary data was within the laboratory established acceptance criteria, as allowed by the WAP. These data indicate that the laboratory was operating in control during the analysis of all the preliminary samples associated with the Special Setups Sludge waste stream.

Table M-2. Analytical Chemistry Laboratory metals quality control average percent recovery of LCSs.

Element	LCS (% Recovery)	LCS Standard Deviation	Data Points (n)
Sb	98.7	25.1	3
As	99.4	2.7	3
Ba	101.2	10.5	3
Be	101.0	3.9	3
Cd	100.1	2.8	3
Cr	100.1	11.2	3
Pb	106.0	7.4	3
Hg	106.1	4.5	4
Ni	99.2	5.5	3
Se	96.4	7.4	3
Ag	103.7	5.3	3
Tl	111.8	14.2	3
V	98.4	5.6	3
Zn	100.6	4.7	3

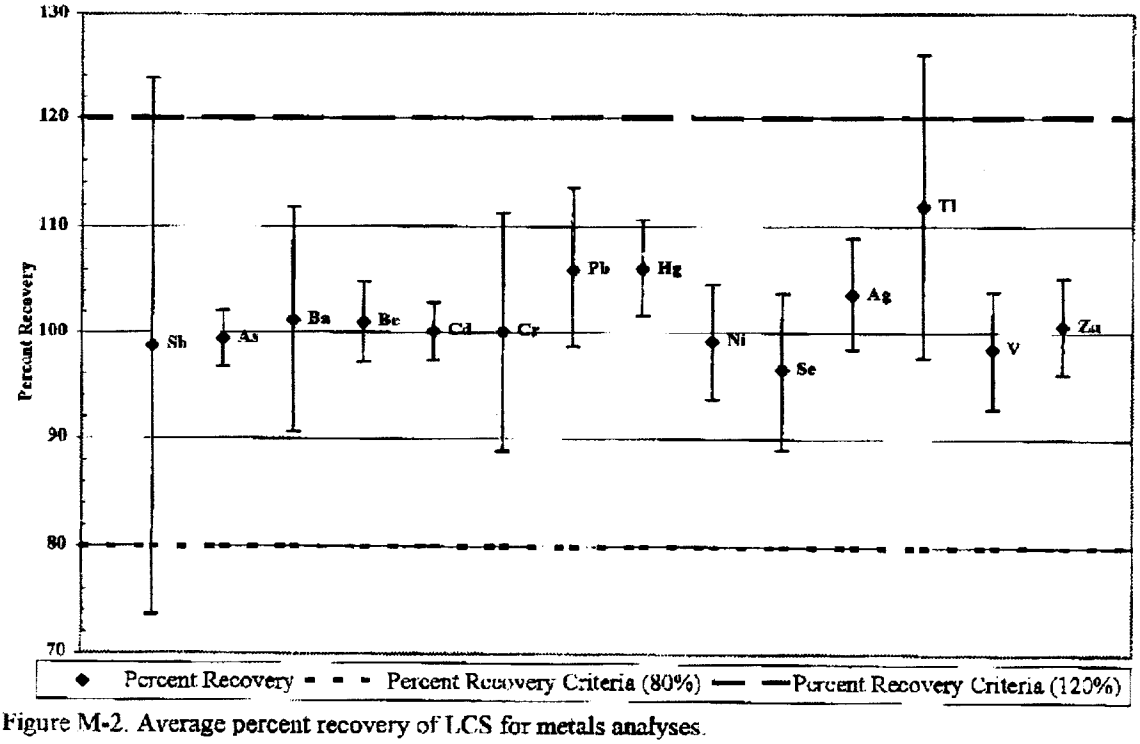

Figure M-2. Average percent recovery of LCS for metals analyses.

A-2 Preliminary Semivolatile Organic Compound Data: Data Use Assessment

The SVOC data have been assessed from a waste stream perspective, that is, waste stream averages, for the performance indicators MS/MSD and LCS. The performance of these indicators will demonstrate whether the preliminary SVOC data can be used for waste stream profile conclusions. Data results for individual compounds whose averages indicate a potential bias, that is, the averages and/or associated error fall outside the WAP criteria, are discussed individually and compared to AK expectations wherever possible.

The MS/MSD and LCS data are summarized using a combination of tables and graphs. The average data used to generate the MS/MSD graphs; Figures SV-1 and SV-2 are presented in Table SV-1. The figures contain the percent recoveries for the MS/MSDs and the RPDs respectively. The LCS results are illustrated in Figure SV-3 and summarized in Table SV-2.The data used to generate the LCS and MS/MSD graphs are presented by compound in Appendix C, Table C-1. The summary provided by Appendix C, Table C-1, allows a quick view of all the data associated with each compound.

Table SV-1. Analytical Chemistry Laboratory SVOC quality control average percent recovery and RPD of MS/MSDs.

Compound	% Recovery MS/MSD	MS Standard Deviation	Count (n)	RPD	Count (n)
1,4-Dichlorobenzene	61 5	9.3	6	19.3	3
2,4-Dinitrotoluene	67.1	11.2	6	23.5	3
Hexachloroethane	64.0	11.9	4	30.5	2
Nitrobenzene	69.0	12.1	4	29.5	2
Pentachlorophenol	0	--	2	NA*	0

*The RPD was not calculated because of the lack of recovery for the MS/MSD pair.

Compounds that reflected problems from a waste stream average perspective are discussed individually below, first, from the matrix effects indicated, and second from a laboratory control perspective.

A-2.1 Preliminary Semi-volatile Organic Compound Data: Matrix Spike/Matrix Spike Duplicate Data Assessment

All compound average MS/MSD reported data points were within the WAP criteria, with the exception of pentachlorophenol. All of the calculated RPD averages met criteria, as shown in Figure SV-2. Pentachlorophenol RPD was not calculated because of the lack of recovery for the MS/MSD pair due to matrix effects for the one batch (ACL99004S) that this compound was analyzed as a MS/MSD component. Figure SV-1 shows a general negative bias due to matrix effects as illustrated by the location of the average data points. However, all lower ends of the error bars fall within the criteria for all the MS/MSD compounds, except the aforementioned pentachlorophenol.

Pentachlorophenol MS/MSD data were below the WAP criteria as indicated on Figure SV-1. This negative bias was due to matrix effects. All sample results for this compound were non-detects. The upper 90% confidence limit (UCL_{90}) for this compound could not be calculated. The maximum non-

detect value (see Table 4-2) is less than the RTL by five orders of magnitude. The D037 code should not be applied.

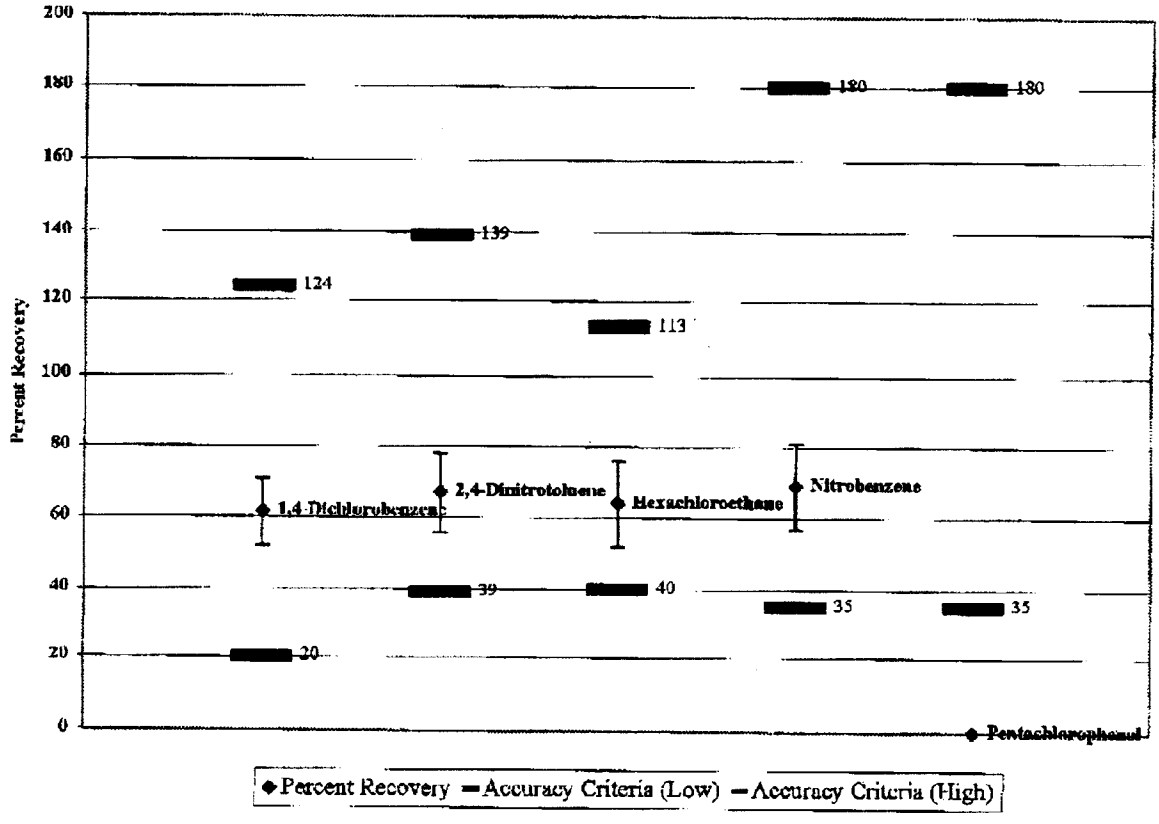

Figure SV-1. Average percent recovery of MS/MSDs for SVOC analyses.

The RPD averages, as shown in Figure SV-2, for the MS/MSDs meet the WAP criteria. Note that if the averages are below the solid lines on the graph, the compound RPD is acceptable. The sample results for this compound were all non-detects; therefore the UCL_{90} could not be calculated. The RPD for pentachlorophenol was not calculated due to the lack of recovery for the MS/MSD pair due to matrix effects. The mean sample specific detection limit was reported at a level five to six times below the RTL. The D037 code should not be applied.

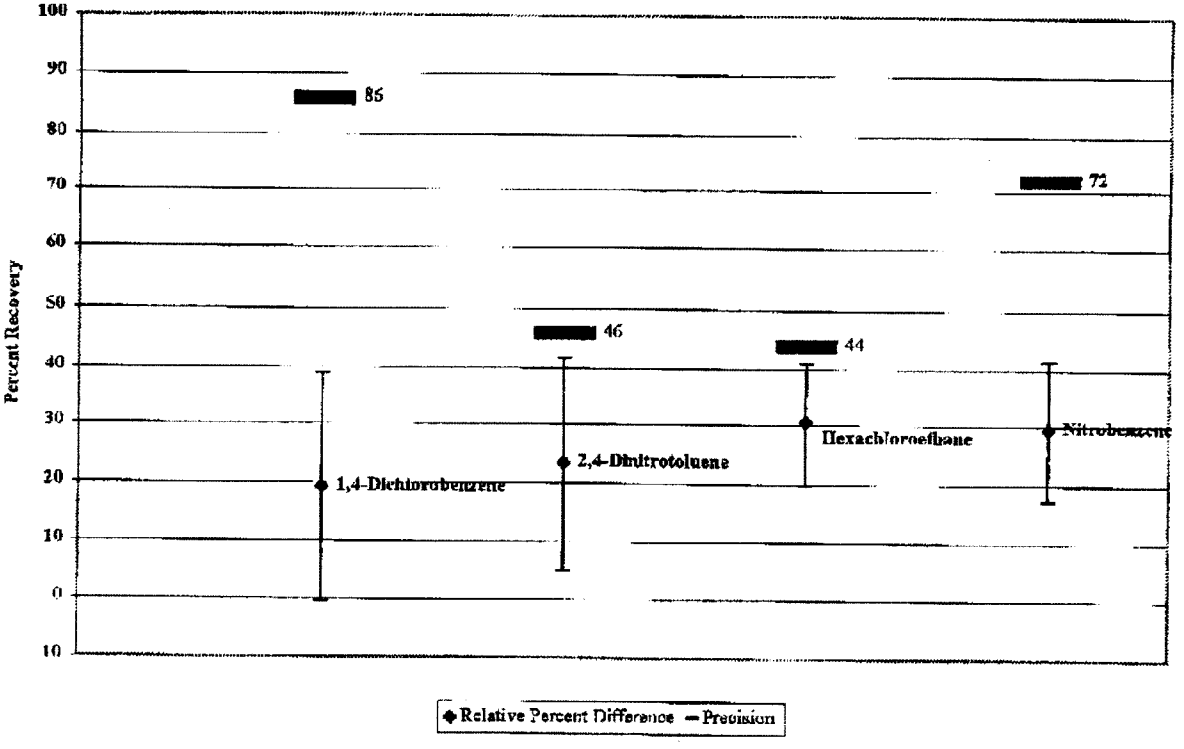

Figure SV-2. Average RPDs of MS/MSDs for SVOC analyses.

A-2.2 Preliminary Semi-volatile Organic Compound Data: Surrogate Compound Data Assessment

The surrogate averages from IDC 700 and 801 samples are addressed in the following section. The detailed data summary is in Appendix C, Table C-2.

All of the surrogate compound recoveries were within the acceptance criteria, as reflected in Figures SV-3 through Figure SV-6. The surrogates used were nitrobenzene-d5 (NBZ), 2-fluorobiphenyl (FBP), 2-fluorophenol (2FP), and 2,4,6-tribromophenol (TBP). The surrogate recoveries are plotted by compound. These data were used to produce laboratory generated acceptance criteria, that is, a mean, standard deviation, and 3-σ values, for this specific waste stream (per the WAP, Table B3-5). Exceptions, if any, are discussed individually below.

In general, the performance of the SVOC surrogates for all analyzed samples associated with this waste stream was acceptable. That is, the recoveries were within the 3-σ limits established per the WAP criteria, Table B3-7.

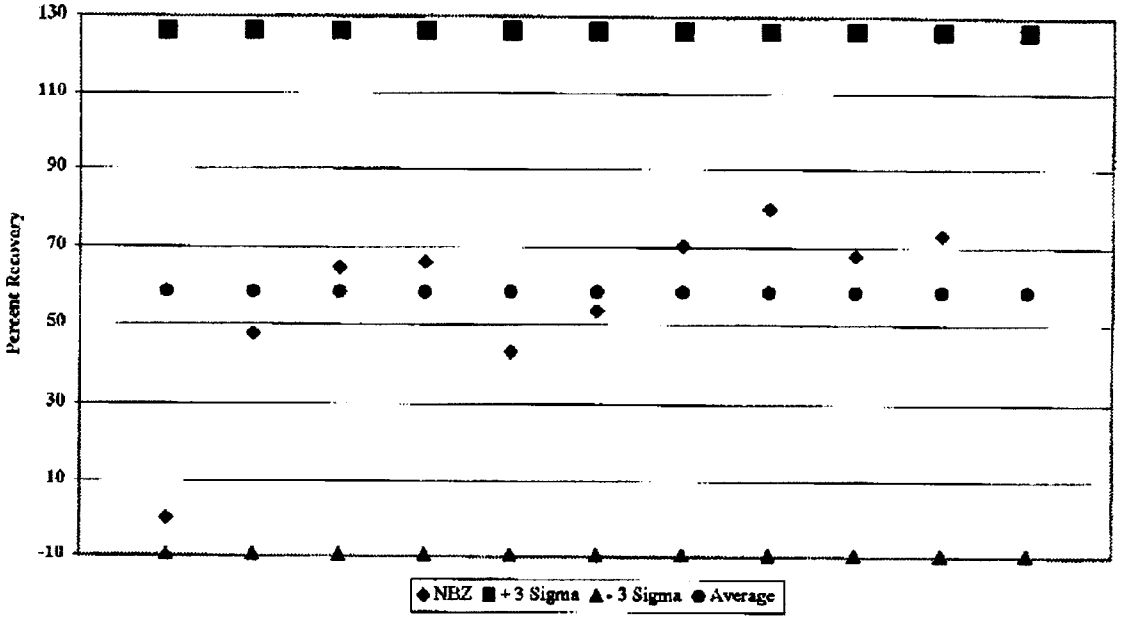

Figure SV-3. Average percent recovery of SVOC analyses surrogate NBZ.

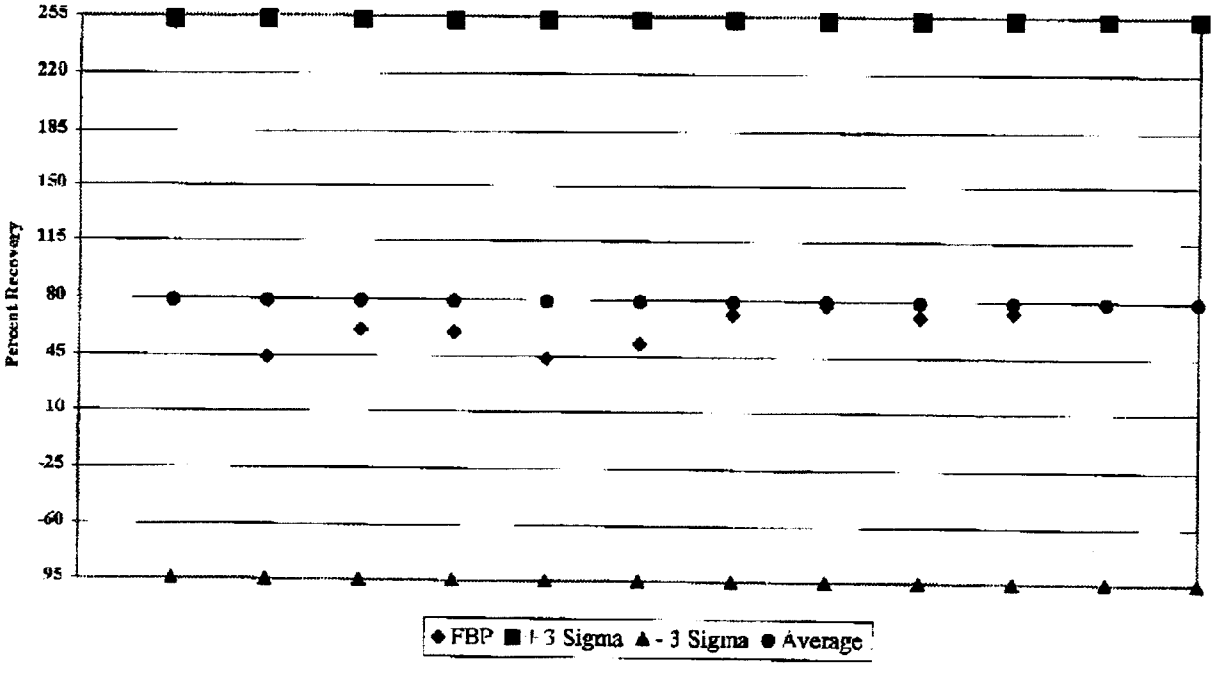

Figure SV-4. Average percent recovery of SVOC analyses surrogate FBP.

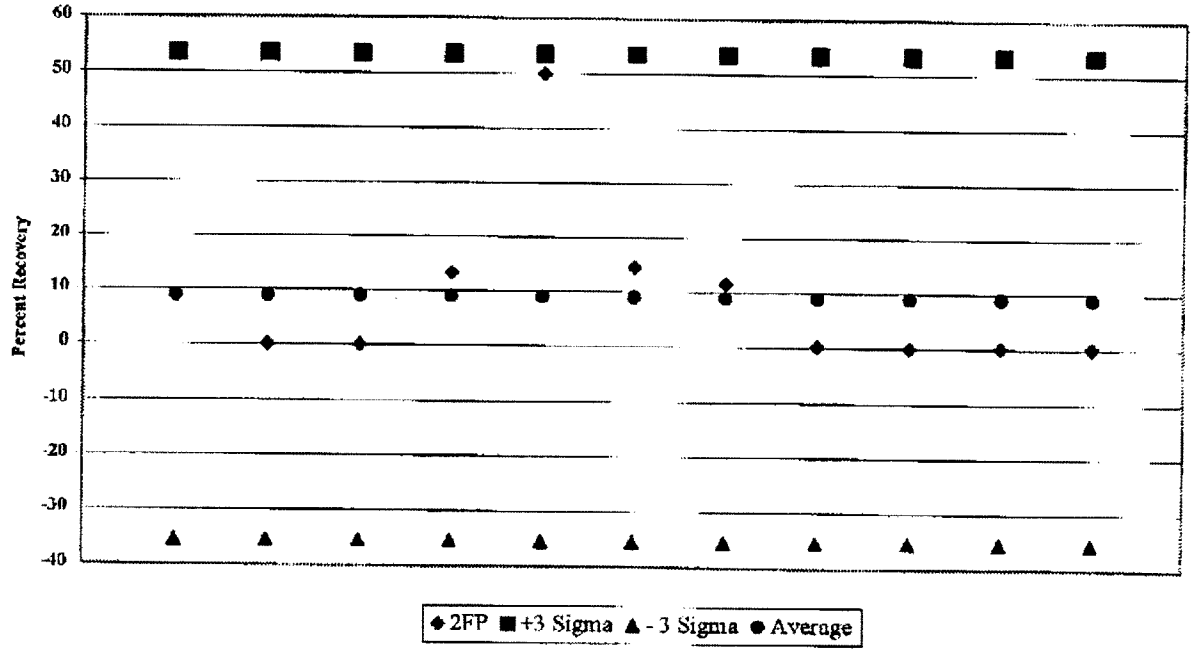

Figure SV-5. Average percent recovery of SVOC analyses surrogate 2FP.

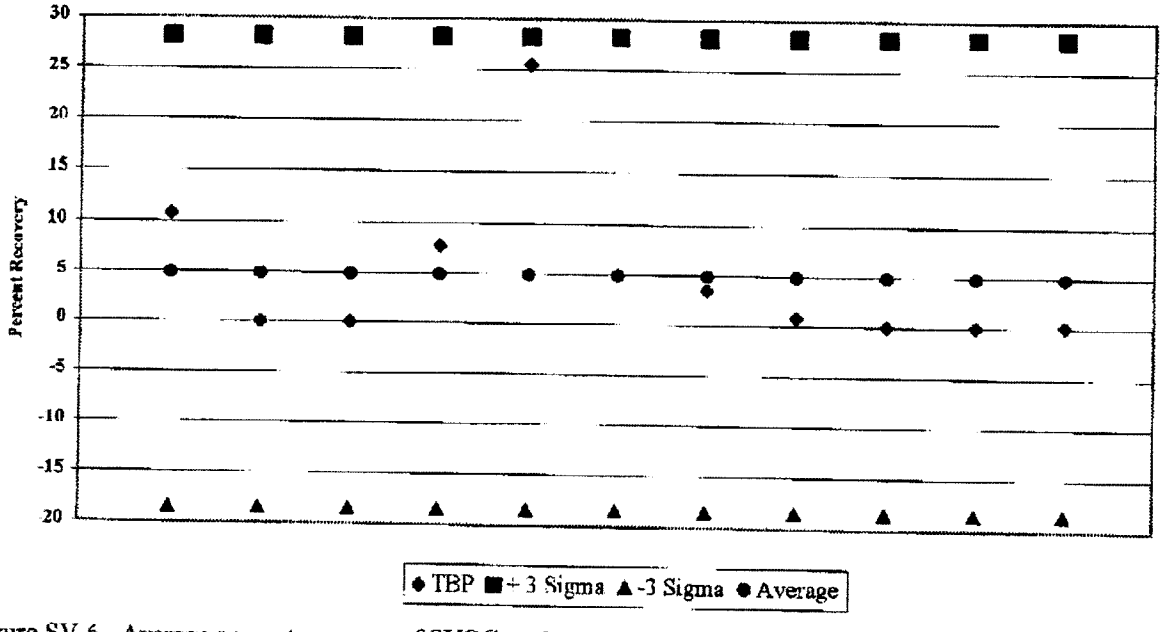

Figure SV-6. Average percent recovery of SVOC analyses surrogate TBP.

A-2.3 Preliminary Semi-volatile Organic Compound Data: Laboratory Control Samples Data Assessment

All averages and associated error for the LCS, as shown in Figure SV-7, meet the WAP criteria. Based on the performance of this matrix independent standard, the laboratory method was performing consistently and in control relative to this independent check sample.

Table SV-2. Analytical Chemistry Laboratory SVOC quality control average percent recovery of LCSs.

Compound	% Recovery LCS	LCS Standard Deviation	Count (n)
1,4-Dichlorobenzene	96.7	3.6	3
2,4-Dinitrophenol	117		1
2,4-Dinitrotoluene	90.7	4.7	3
Hexachlorobenzene	94.1		1
Hexachloroethane	102.2	8.5	3
m/p-Methylphenol	97.8		1
Nitrobenzene	96.0	2.8	3
o-Methylphenol	97		1
o-Dichlorobenzene	94		1
Pentachlorophenol	115		1

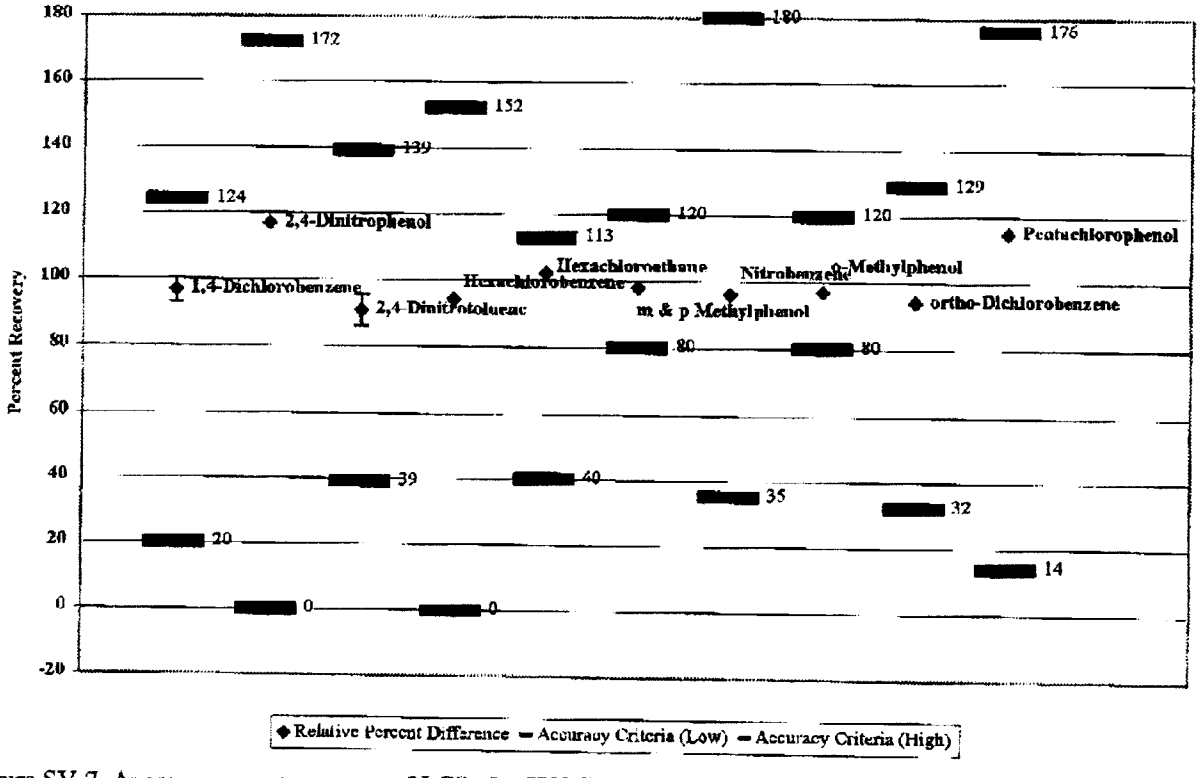

Figure SV-7. Average percent recovery of LCSs for SVOC analyses.

A-3. Preliminary Purgeable Volatile Organic Compound Data: Data Use Assessment

The purgeable volatile organic compound (VOC) data have been assessed from a waste stream perspective (waste stream averages) for the performance indicators, MS/MSD, LCS, and surrogates. The performance of these indicators will demonstrate whether the preliminary VOC data can be used to assess additional sampling needs and/or impacts to the waste stream profile. Data results for individual compounds whose averages indicate a potential bias, such as, the averages and associated error bars fall outside the WAP criteria, are discussed individually and compared to AK expectations wherever possible.

The MS/MSD and LCS results discussed in this appendix are summarized using a combination of tables and graphs. The average data used to generate the MS/MSD graph, Figure V-1, are presented in Table V-1. Figure V-2 reflects the RPD results for the MS/MSD averages. The LCS results are illustrated in Figure V-6 and summarized by compound in Table V-2. The data used to generate these graphs are presented by compound in Appendix D, Tables D-1 and D-2. The summaries provided by Table D-1, Appendix D, allow a quick view of the data associated with each compound.

The recovery data for the three surrogate compounds are presented in detail in Appendix D, Table D-2, and was used to generate graphs (Figures V-3, V-4, and V-5). The summaries provided by Table D-2, Appendix D, allow a quick view of the data associated with each compound.

Any nonconformance reports (NCRs) generated throughout the analysis were considered and if the disposition for the data was "reject" the data were not used.

Compounds that reflected problems from a waste stream average perspective are discussed individually, first, from the matrix effects indicated, and second from a laboratory control perspective.

A-3.1 Preliminary Purgeable Volatile Organic Compound: Matrix Spike/Matrix Spike Duplicate Data Assessment

The data graphically shown in Figure V-1 illustrate that the average MS/MSD results with the associated errors all fall within the WAP criteria. Upper and lower limit values for individual compounds are represented by solid lines (each compound has a unique limit). Figure V-2 reflects the RPD results and WAP acceptance criteria are represented by dotted lines. Note that the average RPD data are all below the WAP acceptance criteria shown on the graph, demonstrating that the data meet WAP precision requirements.

Table V-1. Analytical Chemistry Laboratory quality control average percent recovery of VOC MS/MSDs.

Compound	% Recovery MS/MSD	MS Standard Deviation	Count (n)	RPD	Count (n)
1,1-Dichloroethylene	92.0	11.6	4	8.9	2
Benzene	85.3	3.4	4	4.9	2
Chlorobenzene	101.5	4.0	4	1.6	2
Toluene	102.8	4.6	4	6.3	2
Trichloroethylene	106.2	5.0	4	3.7	2

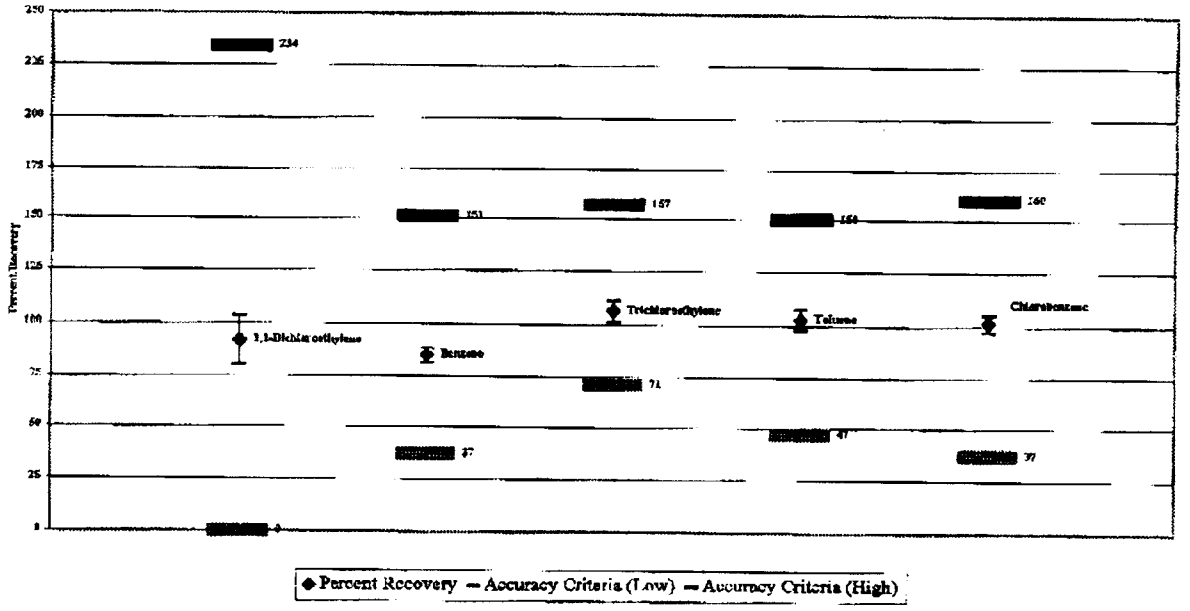

Figure V-1. Average percent recovery of MS/MSD for VOC analyses.

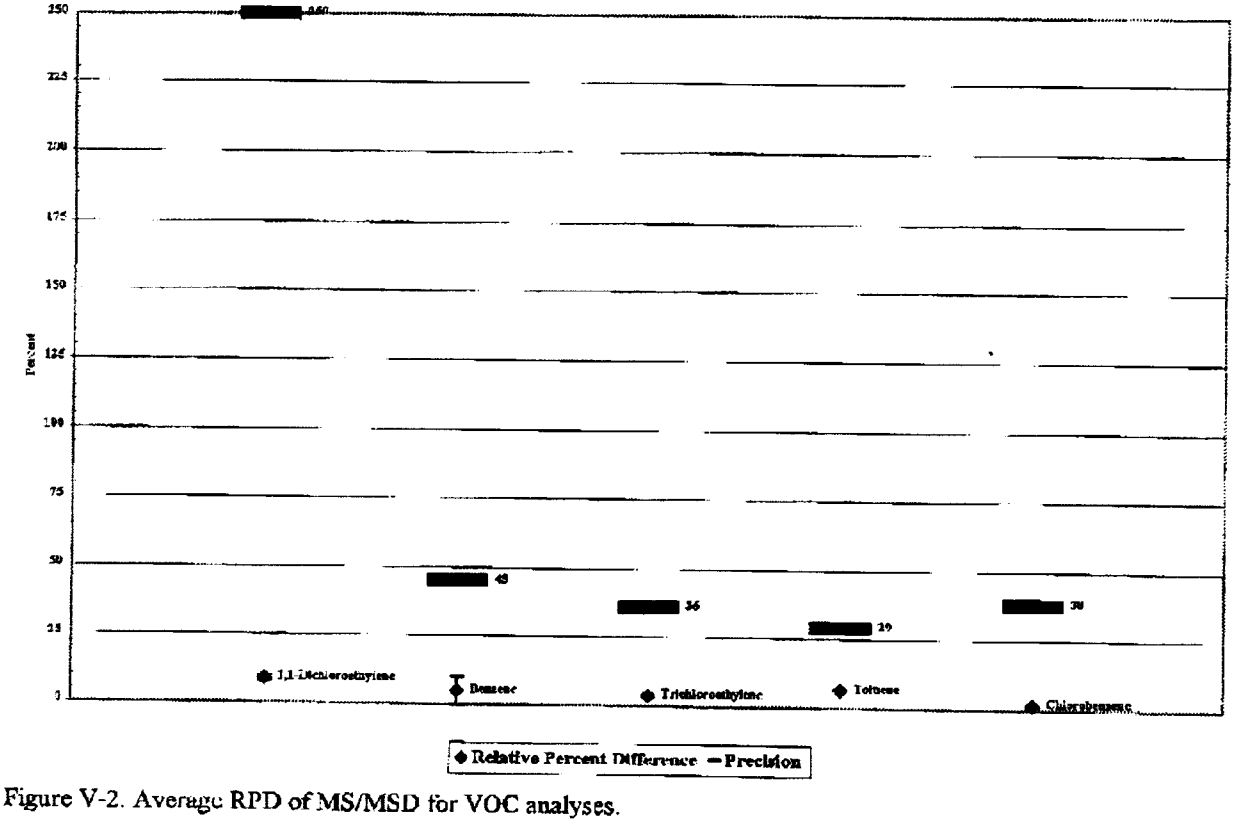

Figure V-2. Average RPD of MS/MSD for VOC analyses.

A-3.2 Preliminary Purgeable Volatile Organic Compound: Surrogate Compound Data Assessment

All of the surrogate compound recoveries were within the acceptance criteria, as reflected in Figures V-3 through Figure V-5. The surrogates used were 1,2-dichloroethane-d4 (DCA), toluene-d8 (TOL), and 4-bromofluorobenzene (BFB). The surrogate recoveries are plotted by compound. These data were used to produce laboratory generated acceptance criteria, that is, a mean, standard deviation, and 3-σ values, for this specific waste stream (per the WAP, Table B3-5). Exceptions, if any, are discussed individually below.

In general, the performance of the VOC surrogates for all analyzed samples associated with this waste stream was acceptable. That is, the recoveries were within the 3-σ limits established per the WAP criteria, Table B3-5.

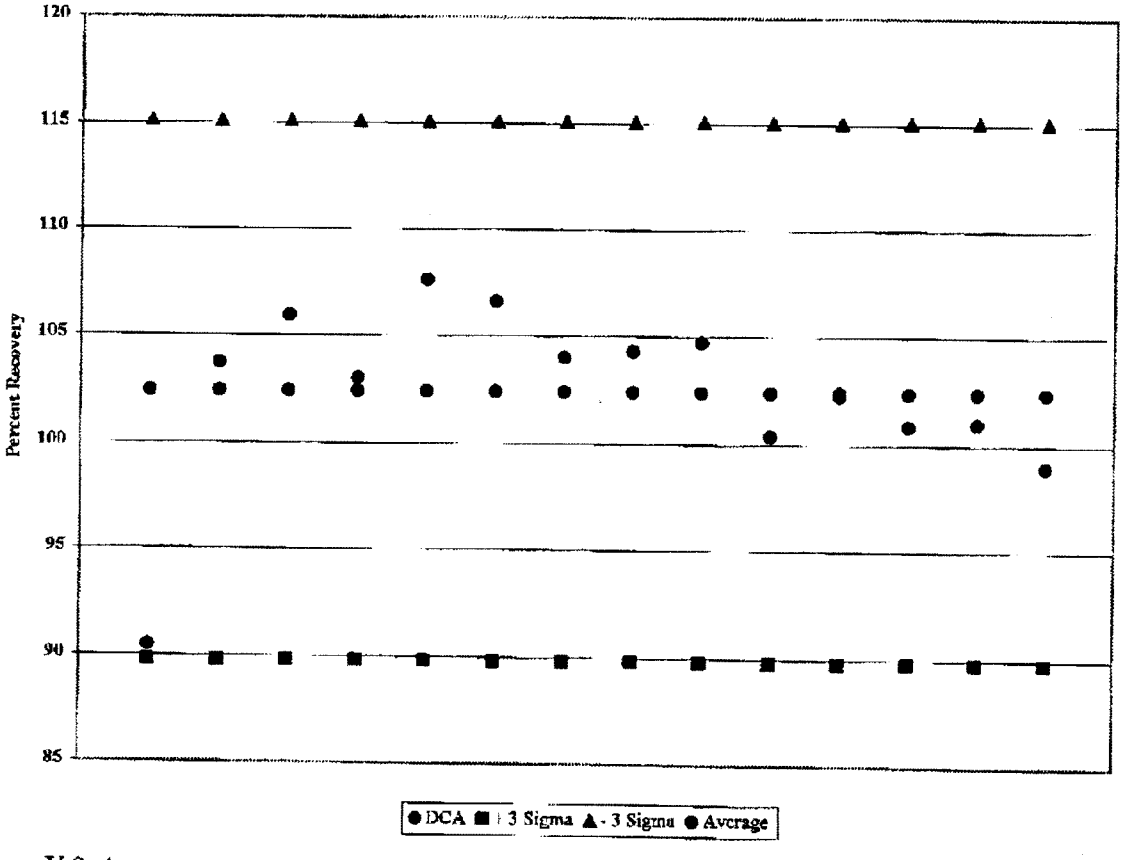

Figure V-3. Average percent recovery of surrogate DCA VOC analyses.

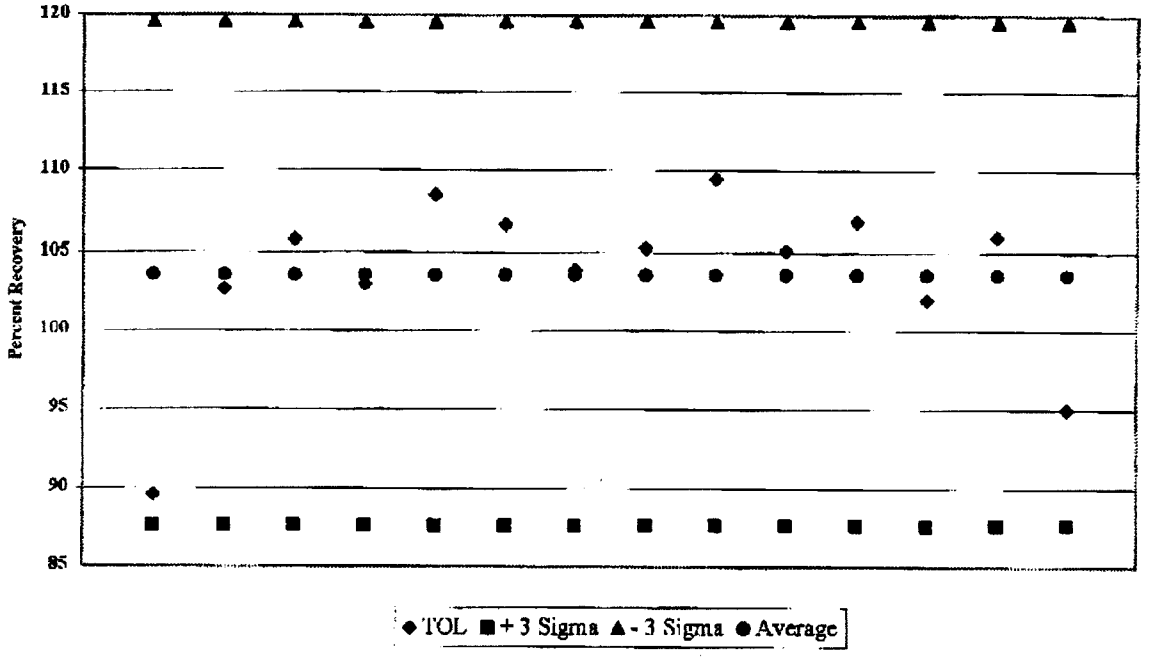

Figure V-4. Average percent recovery of surrogate TOL VOC analyses.

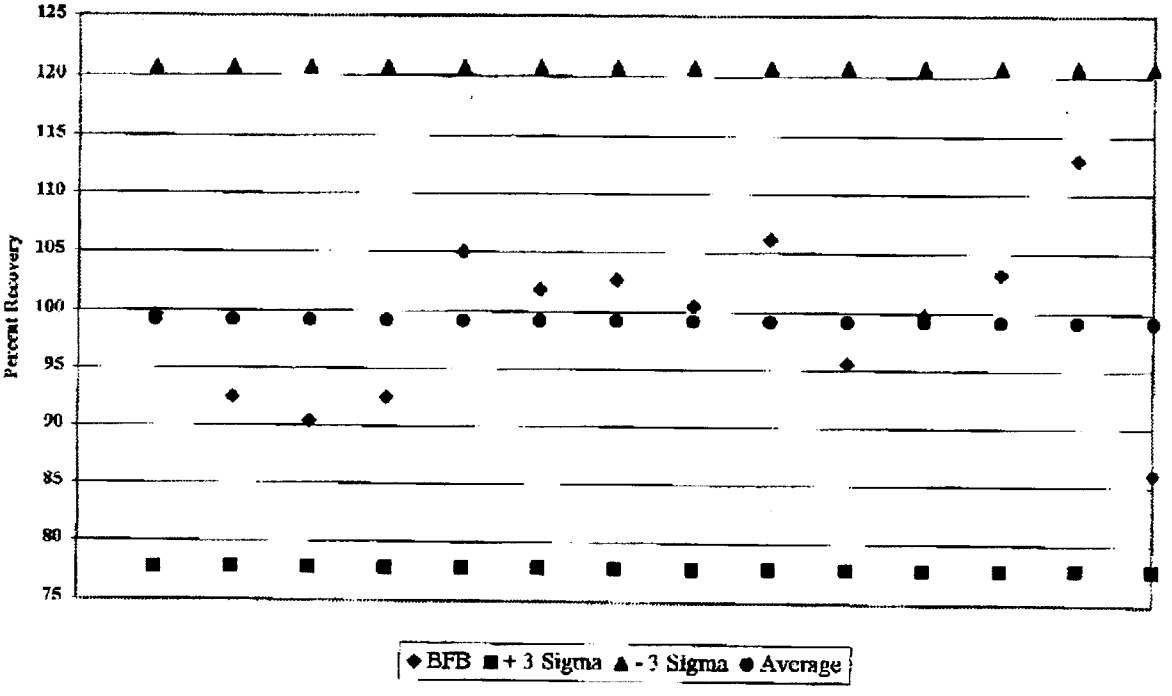

Figure V-5. Average percent recovery of surrogate BFB VOC analyses.

A-3.3 Preliminary Purgeable Volatile Organic Compound: Laboratory Control Sample Data Assessment

The preliminary LCS average data and associated standard deviations were all well within the WAP criteria listed in Table B3-4 (given in Table V-2 and illustrated in Figure V-6). This demonstrates that the laboratory was performing this analysis consistently and in control throughout the analysis of these samples.

Table V-2. Analytical Chemistry Laboratory quality control average percent recovery of VOC LCSs.

Compound	LCS % Recovery	LCS Standard Deviation	Count (n)
1,1,1-Trichloroethane	99.63	4.63	2
1,2-Dichloroethane	114.30	5.02	2
Carbon Tetrachloride	108.58	0.67	2
Chlorobenzene	95.53	1.31	2
Chloroform	99.98	5.69	2
Ethyl benzene	107.68	0.60	2
m-Xylene and p-Xylene	90.95	1.27	2
o-Xylene	87.05	0.07	2
Tetrachloroethylene	79.55	3.82	2
Toluene	108.00	5.73	2

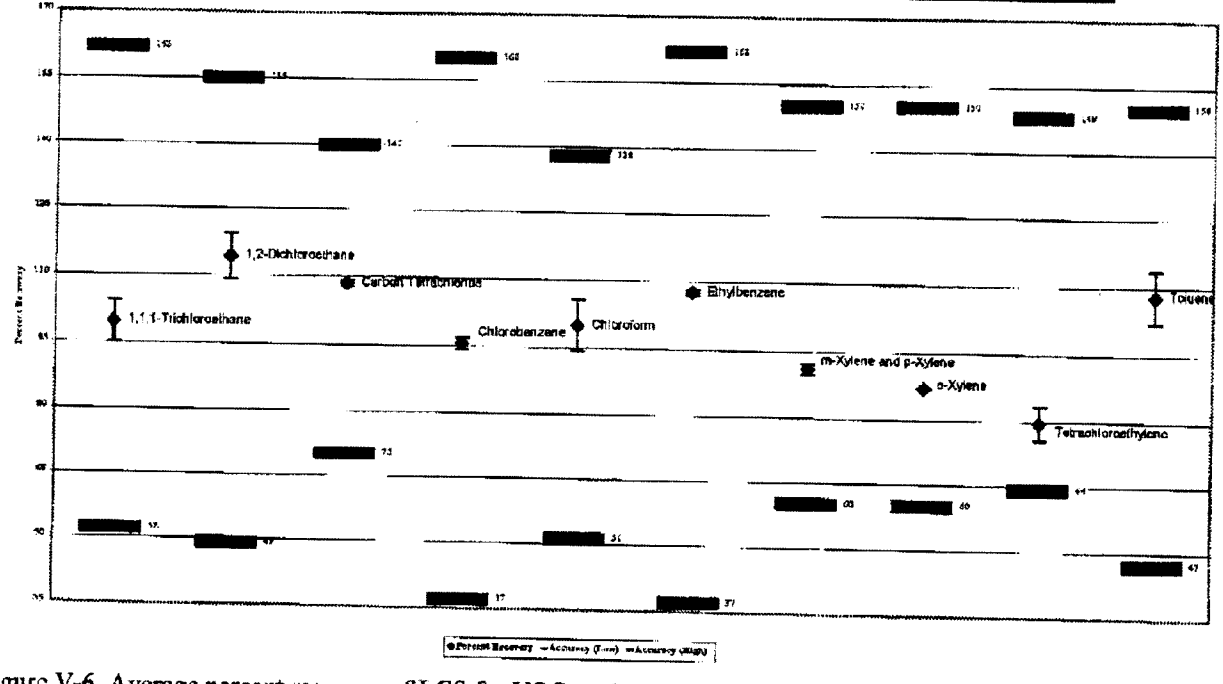

Figure V-6. Average percent recovery of LCS for VOC analyses.

A-4. Preliminary Non-halogenated Volatile Organic Compound Data: Data Use Assessment

The NH VOC data have been assessed from a waste stream perspective (waste stream averages) for the performance indicators, MS/MSD and LCS. These performance indicators show that the NH VOC data are acceptable for use as preliminary data. In all cases except methanol and ethyl ether, individual compound averages and associated error bars (derived from the standard deviations) fell within the WAP criteria. The deviant compounds are discussed individually below.

The MS/MSD and LCS results discussed in this section are summarized using a combination of tables and graphs. The data averages used to generate the MS/MSD graph, Figure N-1, are summarized in Table N-1. The average LCS results are illustrated in Figure N-2 and summarized in Table N-2. The data used to generate these graphs are presented by compound in Appendix E, Table E-1. The summary provided in Table E-1, Appendix E, allows for a quick view of all the data associated with each compound.

Ethyl ether indicates a slight negative bias as indicated by the average being in the lower portion of the control limits and the lower error bar extending approximately 5% below the lower limit. The overall average for this compound indicates that the slight negative bias due to matrix effect has no negative impact on this waste stream. No further discussion is needed.

Methanol indicated a positive bias in the waste stream average [576.1%] and a wide variance evidenced by the large standard deviation [781.3]. This is due to one batch (ACL97021N) that was outside control limits due to disproportional spike-added amounts as discussed below. If this batch were to be excluded from the waste stream average statistics, the average MS/MSD recovery would be 99.8 % and the RPD would be 3.2, rather than 19.8. However, the positive bias associated with this compound indicates that the use of this data would be conservative. No further discussion is needed.

A-4.1 Preliminary Non-halogenated Volatile Organic Compound Data: Matrix Spike/Matrix Spike Duplicate Assessment

All the MS/MSD averages, except methanol, fall within the WAP criteria of 60-150% recovery as reflected in Figure N-1. All the associated error bars except methanol and the lower error bar of ethyl ether fall within the WAP criteria. These performance data indicate that the associated sample data are appropriate for use "as is."

- ACL97021N – Although results exceeded acceptance criteria for the MS/MSD, there is no indication that the high recoveries were due to matrix interference since the ratio of sample result to the amount of spike added was out of proportion (i.e. sample result = 3000 ppm and spike added = 100 ppm) therefore it is difficult to accurately determine spike recovery in this indigenous sample matrix.

- ACL97022N – The results exceeded acceptance criteria for the MS/MSD for ethyl ether. There was a matrix interference problem as evidenced in the matrix spike and the matrix spike duplicate.

The average RPDs associated with the NH VOC MS/MSD data, also illustrated in Figure N-1, meet the WAP criteria. Note that if the data points fall below the solid line of the graph, the compound met the RPD criteria.

Table N-1. Analytical Chemistry Laboratory quality control average percent recovery of MS/MSDs for NH VOCs.

Compound	Average Percent Recovery MS/MSD	Standard Deviation	Count (n)	RPD	Count (n)
Acetone	97.7	2.0	6	1.7	3
Butanol	102.2	1.9	6	1.8	3
Ethyl ether	76.6	20.1	6	3.2	3
Isobutanol	102.9	2.4	6	1.5	3
Methanol	576.1	781.3	6	19.8	3
Methyl ethyl ketone	96.8	5.2	6	2.5	3
Pyridine	96.6	2.3	6	0.7	3

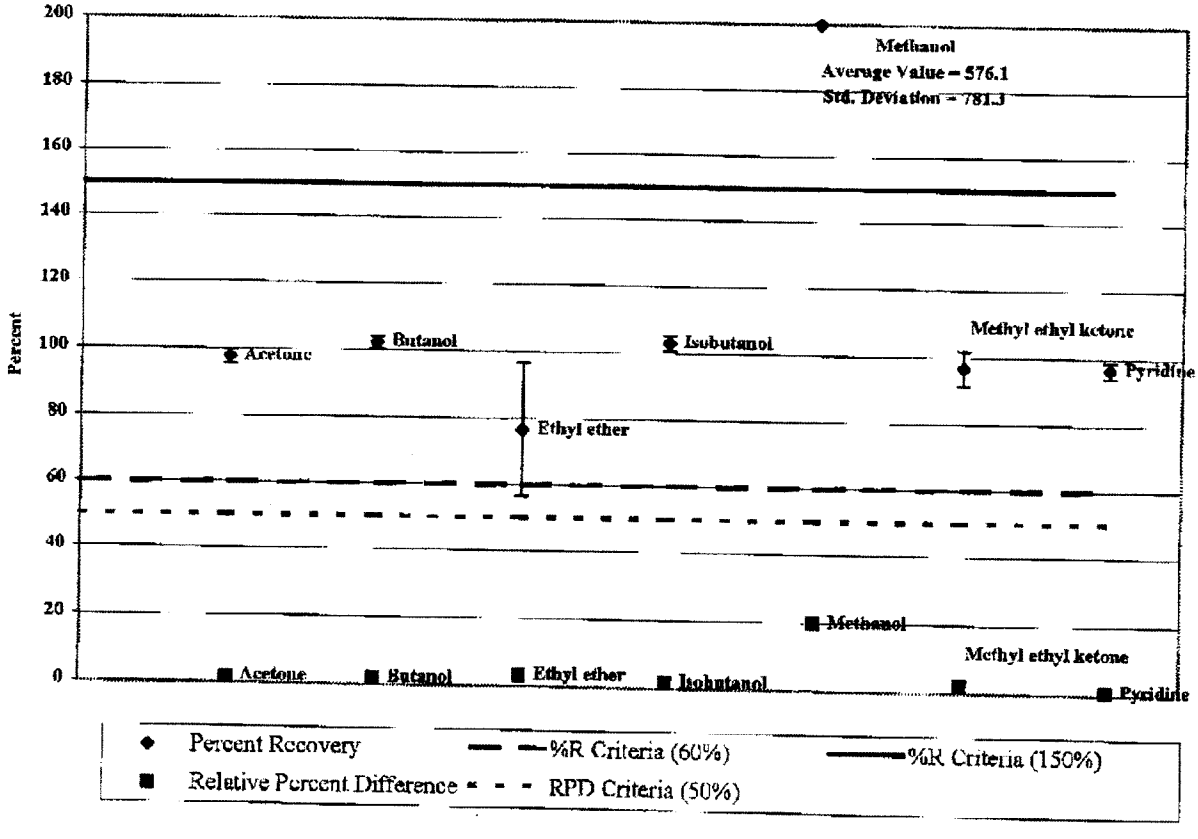

Figure N-1. Average percent recovery and RPD of MS/MSDs for NH VOC analyses.

A-4.2 Preliminary Non-halogenated Volatile Organic Compound Data: Laboratory Control Sample Assessment

The preliminary LCS average data and associated standard deviations were all well within the WAP criteria of 60-150% (illustrated in Figure N-2). This demonstrates that the laboratory was performing this analysis consistently and in control throughout the analysis of these samples.

Table N-2. Analytical Chemistry Laboratory quality control average percent recovery of LCSs for NH VOC.

Compound	LCS % Recovery	LCS Standard Deviation	Count (n)
Acetone	97.9	6.3	3
Butanol	100.7	3.3	3
Ethyl ether	97.4	5.0	3
Isobutanol	102.0	2.8	3
Methanol	98.2	2.0	3
Methyl ethyl ketone	100.4	3.3	3
Pyridine	96.0	4.2	3

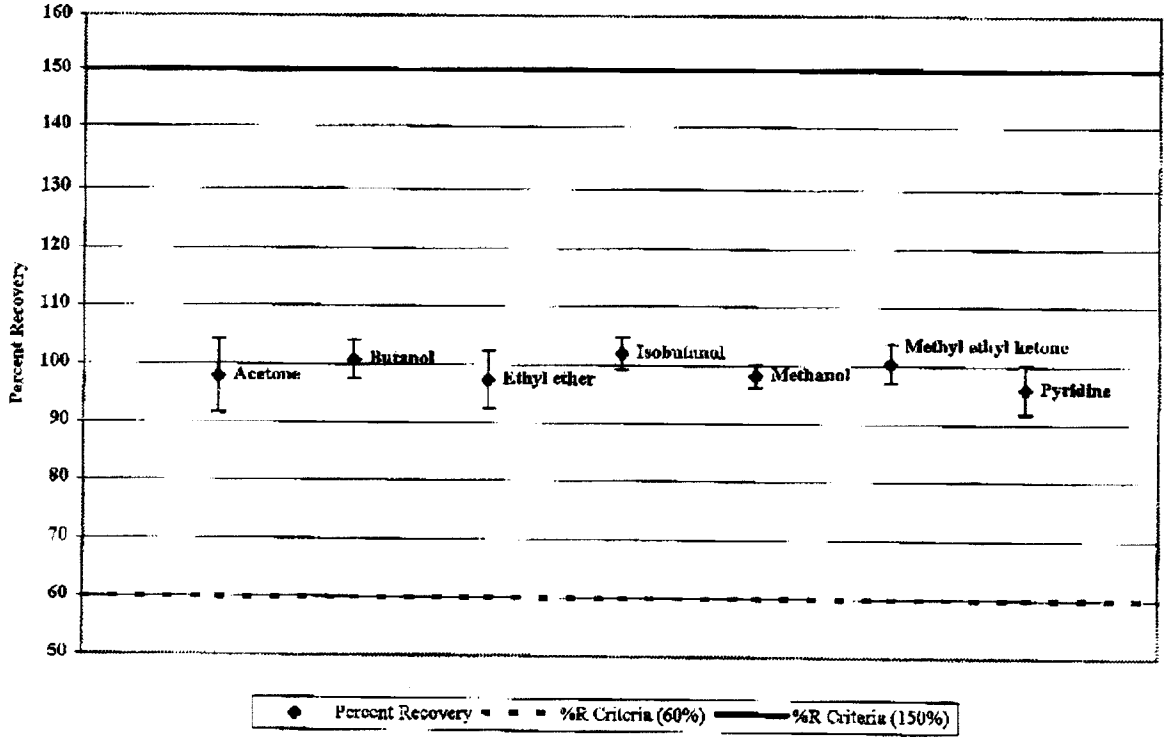

Figure N-2. Average percent recovery of LCS for NH VOC analyses.

Appendix B

Metals Back-up Data

Table B-1. Analytical Chemistry Laboratory Metals quality control MS/MSD and LCS summary by element.

		Matrix Spikes (80 – 120 %)			LCS*	
Element	Batch No.	% Recovery MS	% Recovery MSD	RPD (30%)	% Recovery LCS	% Recovery LCS-2
Antimony	ACL97021M	72.7	62.0	18.9	120.2	
	ACL97022M	20.9	32.2	38.7	104.8	
	ACL99004M	68.6	74.4	8.5	71.2	
MS/MSD Average		55.1		22.0	98.7	
Standard Deviation		22.8		15.3	25.1	
Count (n)		6		3	3	
Arsenic	ACL97021M	103.0	92.3	13.7	96.3	
	ACL97022M	106.0	104.5	2.3	101.0	
	ACL99004M	104.6	104.8	1.0	100.9	
MS/MSD Average		102.5		5.7	99.4	
Standard Deviation		5.1		7.0	2.7	
Count (n)		6		3	3	
Barium	ACL97021M	95.2	91.9	6.3	96.9	
	ACL97022M	102.6	99.7	3.6	113.2	
	ACL99004M	94.2	93.3	0.2	93.5	
MS/MSD Average		97.9		3.4	101.2	
Standard Deviation		5.2		3.1	10.5	
Count (n)		6		3	3	
Beryllium	ACL97021M	95.1	96.8	1.8	97.3	
	ACL97022M	99.8	100.5	0.3	105.1	
	ACL99004M	82.7	102.6	19.5	100.7	
MS/MSD Average		98.2		7.2	101.0	
Standard Deviation		3.3		10.7	3.9	
Count (n)		6		3	3	
Cadmium	ACL97021M	86.7	91.0	1.3	99.6	
	ACL97022M	95.5	89.9	6.3	97.6	
	ACL99004M	79.5**	87.4	8.7	103.2	
MS/MSD Average		88.3		5.4	100.1	
Standard Deviation		5.3		3.8	2.8	
Count (n)		6		3	3	
**Average is not bolded as the average, when reported to two significant figures, is 80% and the limits are 80-120%.						
Chromium	ACL97021M	83.4	82.0	3.6	102.3	
	ACL97022M	98.3	96.8	2.2	110.0	
	ACL99004M	53.6	114.3	42.4	87.9	
MS/MSD Average		88.1		16.1	100.1	
Standard Deviation		20.6		22.8	11.2	
Count (n)		6		3	3	
Lead	ACL97021M	101.2	103.9	0.8	108.1	
	ACL97022M	107.6	108.1	0.4	112.2	
	ACL99004M	84.7	99.2	14.5	97.8	
MS/MSD Average		100.8		5.2	106.0	
Standard Deviation		8.6		8.0	7.4	
Count (n)		6		3	3	

Table B-1. (continued).

Element	Batch No	Matrix Spikes (80 – 120 %) % Recovery MS	% Recovery MSD	RPD (30%)	LCS* % Recovery LCS	% Recovery LCS-2
Mercury	ACL97021M	91.5	95.2	4.0	107.5	106.7
	ACL97022M	43.2	24.1	56.6	99.8	
	ACL99004M	86.4	89.4	3.5	110.5	
MS/MSD Average		71.6		21.4	106.1	
Standard Deviation		30.2		30.5	4.5	
Count (n)		6		3	4	
Nickel	ACL97021M	92.5	89.5	5.1	93.9	
	ACL97022M	98.1	91.6	5.2	104.9	
	ACL99004M	66.7	105.5	31.7	98.7	
MS/MSD Average		90.7		14.0	99.2	
Standard Deviation		13.1		15.3	5.5	
Count (n)		6		3	3	
Selenium	ACL97021M	104.1	101.5	6.1	100.0	
	ACL97022M	97.7	104.3	5.6	101.4	
	ACL99004M	96.1	94.7	0.6	87.9	
MS/MSD Average		99.7		4.1	96.4	
Standard Deviation		4.1		3.0	7.4	
Count (n)		6		3	3	
Silver	ACL97021M	99.1	96.7	4.5	101.5	
	ACL97022M	100.9	103.3	1.3	109.7	
	ACL99004M	72.0	104.0	29.9	99.9	
MS/MSD Average		96.0		11.9	103.7	
Standard Deviation		12.1		15.7	5.3	
Count (n)		6		3	3	
Thallium	ACL97021M	88.1	84.1	8.1	123.8	
	ACL97022M	51.6	47.4	9.4	115.6	
	ACL99004M	55.5	76.1	32.1	96.1	
MS/MSD Average		67.1		16.5	111.8	
Standard Deviation		17.1		13.5	14.2	
Count (n)		6		3	3	
Vanadium	ACL97021M	111.7	101.1	6.6	93.4	
	ACL97022M	104.2	98.2	4.6	104.5	
	ACL99004M	82.5	85.6	2.6	97.3	
MS/MSD Average		97.2		4.6	98.4	
Standard Deviation		11.2		2.0	5.6	
Count (n)		6		3	3	
Zinc	ACL97021M	95.6	99.4	0.2	97.5	
	ACL97022M	108.9	108.5	0.7	98.4	
	ACL99004M	0	327.4	123.8	106.0	
MS/MSD Average		123.3		41.6	100.6	
Standard Deviation		108.3		71.2	4.7	
Count (n)		6		3	3	

* Control limits are laboratory established per the WAP.
Reference: WAP Table B3-8, footnote b.

Appendix C

Semi-volatile Organic Compound Back-up Data

Table C-1. Analytical Chemistry Laboratory SVOC quality control MS/MSD and LCS summary by compound.

Compound	Batch #	Matrix Spike* % Recovery MS	Matrix Spike* % Recovery MSD	Matrix Spike* RPD*	LCS* % Recovery LCS
1,4-Dichlorobenzene	ACL97021S	50	75	40	100.8
	ACL97022S	52	62	17	94.5
	ACL99004S	64.7	65.2	0.77	94.7
Average		61.5		19.3	96.7
Standard Deviation		9.3		19.7	3.6
Count (n)		6		3	3
2,4-Dinitrotoluene	ACL97021S	56	86	43	87
	ACL97022S	56	70	21	89
	ACL99004S	65	69.4	6.5	96
Average		67.1		23.5	90.7
Standard Deviation		11.2		18.4	4.7
Count (n)		6		3	3
Hexachloroethane	ACL97021S	52	77	38	109.7
	ACL97022S	56	71	23	103.8
	ACL99004S				93
Average		64.0		30.5	102.2
Standard Deviation		11.9		10.6	8.5
Count (n)		4		2	3
Nitrobenzene	ACL97021S	56	82	38	98.8
	ACL97022S	62	76	21	93.3
	ACL99004S				95.9
Average		69.0		29.5	96.0
Standard Deviation		12.1		12.0	2.8
Count (n)		4		2	3
2,4-Dinitrophenol	ACL99004S				117
Hexachlorobenzene	ACL99004S				94.1
m/p-Methylphenol	ACL99004S				97.8
o-Methylphenol	ACL99004S				97
o-Dichlorobenzene	ACL99004S				94
Pentachlorophenol	ACL99004S	0	0	N/A**	115

* Control limits are laboratory established per the WAP.
Reference: WAP Table B3-6, footnote a.

N/A** Not applicable because the RPD is not calculated when both recoveries are zero (0).

Table C-2. Analytical Chemistry Laboratory SVOC quality control average percent recovery of surrogate compounds by batch.

Batch #	Sample #	Percent Recovery %R Surrogate NBZ	%R Surrogate FBP	%R Surrogate 2FP	%R Surrogate TBP
ACL97021S	ID00181310CM1	0*	250*	0*	0*
	ID00208410CM1RE	47.5	43.8	0	0
	ID00449510CM1	64.8	61.0	13.2	7.8
	ID00488410CM1	66.2	60.0	49.8	25.5
	ID00488420CM1	43.0	43.8	14.5	5
	ID01499010CM1	53.5	53.2	11.5	3.5
Average		45.8	85.3	14.8	7.0
Standard Deviation		24.3	81.0	18.3	9.6
Count (n)		6	6	6	6
ACL97022S	ID00208410CM1	76.5	63	8.8	10.8
Average		76.5	63	8.8	10.8
Standard Deviation					
Count (n)		1	1	1	1
ACL99004S	ID01542610CM1	70.4	71.4	0.2	0.8
	ID00846320CM1DL10	80.0*	77.0*	0*	0*
	ID00846310CM1RE	67.9	70.3	0.1	0
	ID01861210CM1	73.1	73.1	0.1	Detected**
Average		72.9	73.0	0.1	0.3
Standard Deviation		5.2	2.9	0.1	0.5
Count (n)		4	4	4	3
TOTALS FOR ALL BATCHES:					
	Average	58.4	78.8	8.9	4.9
	Standard Deviation	22.7	57.9	14.8	7.8
	Count	11	11	11	11
	3 sigma	68.0	173.6	44.5	23.3
	+3 sigma	126.4	252.4	53.4	28.2
	-3 sigma	58.4	78.8	8.9	4.9

NBZ – nitrobenzene-d5
FBP = 2-fluorobiphenyl
2FP = 2-fluorophenol
TBP = 2,4,6-tribromophenol

* These surrogates are reported with the numeric recovery and a "D" indicating the sample was diluted.

** This surrogate is only reported as "Detected." No numerical value is associated with this data point in the data package.

Appendix D

Volatile Organic Compound Back-up Data

Table D-1. Analytical Chemistry Laboratory VOC quality control MS/MSD and LCS summary by compound.

		Matrix Spikes*			LCS*
		% Recovery	% Recovery		% Recovery
Compound	Batch #	MS	MSD	RPD*	LCS
1,1,1-Trichloroethane	ACL97021V				96.35
	ACL97022V				102.90
Average					99.63
Standard Deviation					4.63
Count (n)					2
1,2-Dichloroethylene	ACL97021V	85.3	80.1	8.2	
	ACL97022V	106	96.4	9.5	
Average		92.0		8.9	
Standard Deviation		11.6		0.9	
Count (n)		4		2	
1,2-Dichloroethane	ACL97021V				117.85
	ACL97022V				110.75
Average					114.30
Standard Deviation					5.02
Count (n)					2
Benzene	ACL97021V	86.5	87.1	1.2	
	ACL97022V	80.2	87.3	8.5	
Average		85.3		4.9	
Standard Deviation		3.4		5.2	
Count (n)		4		2	
Carbon Tetrachloride	ACL97021V				109.05
	ACL97022V				108.10
Average					108.58
Standard Deviation					0.67
Count (n)					2
Chlorobenzene	ACL97021V	105.0	104.9	1.9	96.45
	ACL97022V	97.4	98.7	1.3	94.60
Average		101.5		1.6	95.53
Standard Deviation		4.0		0.4	1.31
Count (n)		4		2	2
Chloroform	ACL97021V				95.95
	ACL97022V				104.00
Average					99.98
Standard Deviation					5.69
Count (n)					2
Ethylbenzene	ACL97021V				107.25
	ACL97022V				108.10
Average					107.68
Standard Deviation					0.60
Count (n)					2
m,p-Xylene	ACL97021V				91.85
	ACL97022V				90.05
Average					90.95
Standard Deviation					1.27
Count (n)					2

Table D-1. (Continued).

Compound	Batch #	Matrix Spikes* % Recovery MS	% Recovery MSD	RPD*	LCS* % Recovery LCS
o-Xylene	ACL97021V				87.00
	ACL97022V				87.10
Average					87.05
Standard Deviation					0.07
Count (n)					2
Tetrachloroethylene	ACL97021V				76.85
	ACL97022V				82.25
Average					79.55
Standard Deviation					3.82
Count (n)					2
Toluene	ACL97021V	99.7	108.3	6.5	103.95
	ACL97022V	104.6	98.4	6.1	112.05
Average		102.8		6.3	108.00
Standard Deviation		4.6		0.3	5.73
Count (n)		4		2	2
Trichloroethylene	ACL97021V	108.5	110.7	0.2	
	ACL97022V	99.1	106.5	7.2	
Average		106.2		3.7	
Standard Deviation		5.0		4.9	
Count (n)		4		2	

* Control limits are laboratory established per the WAP.

Reference: WAP Table B3-4, footnote a.

Table D-2. Analytical Chemistry Laboratory VOC quality control average percent recovery of surrogate compounds by batch.

		Percent Recovery		
Batch #	Sample #	% R Surrogate DCA	% R Surrogate TOL	% R Surrogate BFB
ACL97021V	ID001813101V1	90.5	89.6	99.6
	ID001813102V1	103.7	102.7	92.5
	ID002084101V1	105.9	105.8	90.4
	ID002084102V1	103.0	103.0	92.5
	ID004495101V1	107.6	108.5	105.0
	ID004495102V1	106.6	106.7	101.9
	ID004884101V1	104.0	103.9	102.7
	ID004884102V1	104.3	105.3	100.5
	ID004884201V1	104.7	109.5	106.1
	ID004884202V1	100.4	105.1	95.6
	ID014990101V1	102.3	106.9	99.8
	ID014990102V1	100.9	102.0	103.3
Average		102.8	104.1	99.2
Standard Deviation		4.4	5.1	5.2
Count (n)		12	12	12
ACL97022V	ID002084101V1	101	106	113
	ID002084102V2	99	95	86
Average		100.0	100.5	99.5
Standard Deviation		1.4	7.8	19.1
Count (n)		2	2	2
TOTALS FOR ALL BATCHES:				
	Average	102.4	103.6	99.2
	Standard Deviation	7.2	5.3	7.2
	Count	14	14	14
	3 sigma	12.7	16.0	21.5
	+ 3 sigma	115.1	119.6	120.7
	- 3 sigma	89.8	87.6	77.8

DCA = 1,2-dichloroethane-d4
TOL = toluene-d8
BFB = 4-bromofluorobenzene

Appendix E

Non-halogenated Volatile Organic Compound Back-up Data

Table E-1. Analytical Chemistry Laboratory NH VOC quality control MS/MSD and LCS summary by compound.

		Matrix Spikes (60-150%)			LCS (60-150%)	
Compound	Batch No.	% Recovery MS	% Recovery MSD	RPD	% Recovery LCS	% Recovery LCS-2
Acetone	ACL97021N	100.307	99.419	0.888	98.39	
	ACL97022N	96.074	98.428	2.421	103.98	
	ACL99004N	96.840	94.989	1.929	91.33	
Average		97.7		1.7	97.9	
Standard Deviation		2.0		0.8	6.3	
Count (n)		6		3	3	
Butanol	ACL97021N	103.959	103.906	0.052	101.53	
	ACL97022N	99.204	102.982	3.737	103.54	
	ACL99004N	102.432	100.904	1.502	97.17	
Average		102.2		1.8	100.7	
Standard Deviation		1.9		1.9	3.3	
Count (n)		6		3	3	
Ethyl ether	ACL97021N	90.172	86.923	3.670	91.71	
	ACL97022N	**49.896**	**51.663**	3.480	99.58	
	ACL99004N	91.669	89.552	2.337	100.90	
Average		76.6		3.2	97.4	
Standard Deviation		20.1		0.7	5.0	
Count (n)		6		3	3	
Isobutanol	ACL97021N	105.097	103.674	1.3627	103.33	
	ACL97022N	103.277	105.325	1.964	103.84	
	ACL99004N	100.742	99.474	1.266	98.75	
Average		102.9		1.5	102.0	
Standard Deviation		2.4		0.4	2.8	
Count (n)		6		3	3	
Methanol	ACL97021N	**1934.652**	**1122.733**	**53.1**	99.07	
	ACL97022N	96.560	102.109	5.586	95.99	
	ACL99004N	100.707	99.909	0.795	99.68	
Average		**576.1**		19.8	98.2	
Standard Deviation		781.3		28.9	2.0	
Count (n)		6		3	3	
Methyl ethyl ketone	ACL97021N	101.661	99.927	1.720	99.48	
	ACL97022N	95.790	97.946	2.226	104.03	
	ACL99004N	99.933	98.459	1.487	97.69	
Average		96.8		2.5	100.4	
Standard Deviation		5.2		1.1	3.3	
Count (n)		6		3	3	
Pyridine	ACL97021N	97.933	97.896	0.038	95.89	
	ACL97022N	97.470	98.650	1.203	100.24	
	ACL99004N	94.050	93.318	0.782	91.84	
Average		96.6		0.7	96.0	
Standard Deviation		2.3		0.6	4.2	
Count (n)		6		3	3	

1. REFERENCES

DOE/LLW-2 17, DOE Waste Treatability Group Guidance (WTGG)

EDF-803, Chemical Constituents in TSA Waste

EDF-909, Transuranic Waste Sampling Plan for INEEL

EDF-922, Identification of Transuranic Waste Streams

EPA No. NM4890139088, WIPP Part B Permit

INEL-96/0280, Acceptable Knowledge Document for INEEL Stored Transuranic Waste Rocky Flats Plant Waste

MCP-2525, Drum Core Sample Plan

PADC-1995-20026, Backlog Waste Reassessment Baseline Book, May 16 2000

RWMC-EDF-363, Description of the SWEPP Certified Waste Sampling Program

RWMC-EDF-805R1, Matrix Parameter Category Groups

PLN-187, INEEL Analytical Chemistry Laboratory Implementation Plan for the Transuranic Waste Characterization Implementation Plan

PLN-600, Analytical Laboratory Department Quality Assurance Plan for the Transuranci Waste Characterization Program

2. APPENDICES

Appendix A – Detailed Preliminary Data Assessment

Appendix B – Metals Back-up Data

Appendix C – Semi-volatile Organic Compound Back-up Data

Appendix D – Volatile Organic Compound Back-up Data

Appendix E – Non-halogenated Volatile Organic Compound Back-up Data

Appendix A

Detailed Preliminary Data Assessment

Detailed Preliminary Data Assessment

Preliminary data generated under the Quality Assurance Program Plan (QAPP) and prior to the final Waste Analysis Plan (WAP) have been assessed. Per the WAP, preliminary data may be used to assess the application of hazardous waste numbers (HWNs). The waste stream addressed by this preliminary data is the Special Setups Sludge waste stream, (item description codes [IDCs] 004 and 802).

Preliminary data were generated using the same SW-846 methods currently acceptable under the WAP compliant data. Precision and accuracy performance indicators are addressed individually in the following sub-sections by analytical method, such as, metals, semi-volatile organic compounds (SVOCs), total volatile organic compounds (VOCs), and non-halogenated (NH) VOCs. The indicators include matrix independent, such as, laboratory control samples (LCS) and matrix dependent performance indicators, that is, matrix spikes (MS), matrix spike duplicates (MSDs) and surrogates (where applicable). Recoveries were compiled and average recoveries calculated by analyte as well as relative percent differences (RPDs) as appropriate. Error bars associated with the recovery averages were set at one standard deviation (SD). These data are provided in tables and figures throughout Appendices A through E.

A-1. PRELIMINARY METALS DATA: DATA USE ASSESSMENT

As expected, no metals were detected at significant quantities throughout the preliminary data set associated with this waste stream. The data have been assessed from a waste stream perspective, that is, waste stream averages for the performance indicators were assessed for overall use of the data. Data results for individual elements whose averages and associated error indicated a potential bias are discussed individually and compared to acceptable knowledge (AK) expectations wherever possible.

The MS/MSD and LCS results discussed are summarized using a combination of tables and graphs. Figure M-1 depicts the average percent recoveries of each element for the MS/MSD pairs. The RPD for the MS/MSDs are included. The LCS results are illustrated in Figure M-2 and summarized in Table M-1. The data used to generate these graphs are presented by element in Table M-2. A SD was determined and an error bar tied to each average data point.

The detailed Quality Control (QC) data by element are provided in Appendix B, Table B-1 for the MS/MSD and LCS data. This summary allows a quick view of all the data associated with each element.

Elements that reflected problems from a waste stream average perspective are discussed in Section A-1.1, first, from the matrix effects indicated, and second from a laboratory control perspective. Data use conclusions are included where appropriate.

A-1.1 Preliminary Metals Data: Matrix Spike/Matrix Spike Duplicate Data Assessment

Table M-1 reflects the calculated averages (herein referred to as the waste stream average) with the associated error, and RPDs associated with the MS/MSD results by element. Three MS/MSD pairs, or six data points, were used to calculate these averages. While MS/MSDs were run for every batch, which meets the WAP criteria, the MS/MSDs from solidified wastes other than IDCs 004 or 802 were also considered in this assessment. The data and associated error bars are represented in Figure M-1 by element, with the WAP acceptance limits indicated. Figure M-1 includes the acceptance limits for both recovery and RPD. Note that if the average RPD is below the acceptance limit shown on the graph, the data meet RPD criteria. Elements that, based on the MS/MSD average recoveries and/or associated error bars, do not meet the WAP criteria are discussed individually below. The base assumption is a bias is indicated if either the average or the error bar falls outside the WAP limits.

Table M-1. Analytical Chemistry Laboratory metals quality control average percent recovery of MS/MSDs.

Element	MS/MSD (% Recovery)	MS/MSD %R Standard Deviation	MS/MSD Data Points (n)	RPD	RPD Data Points (n)
Sb	55.1	22.8	6	22.0	3
As	102.5	5.1	6	5.7	3
Ba	97.9	5.2	6	3.4	3
Be	98.2	3.3	6	7.2	3
Cd	88.3	5.3	6	5.4	3
Cr	88.1	20.6	6	16.1	3
Pb	100.8	8.6	6	5.2	3
Hg	71.6	30.2	6	21.4	3
Ni	90.7	13.1	6	14.0	3
Se	99.7	4.1	6	4.1	3
Ag	96.0	12.1	6	11.9	3
Tl	67.1	17.1	6	16.5	3
V	97.2	11.2	6	4.6	3
Zn	123.3	108.3	6	41.6	3

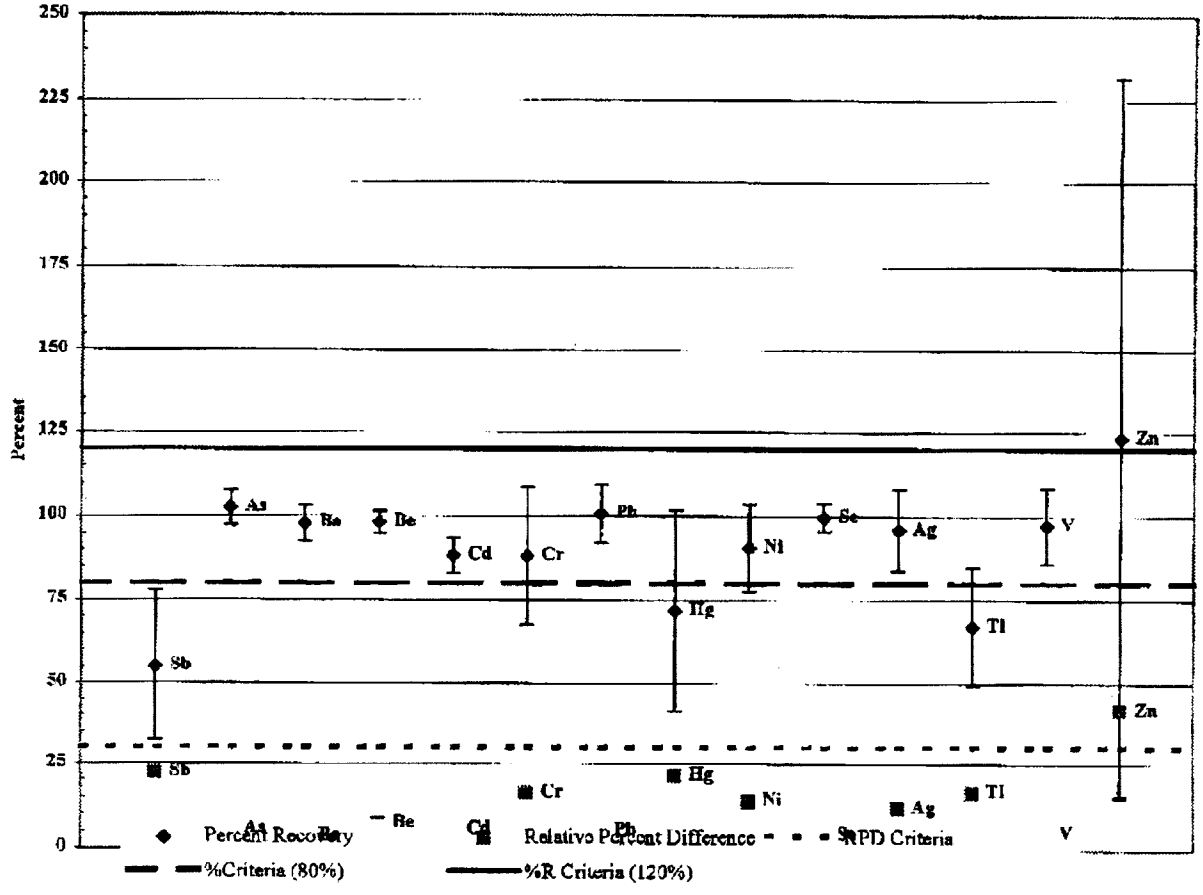

Figure M-1. Average percent recovery and RPD of MS/MSDs for metals analyses.

Antimony (Sb), which is not a toxicity characteristic (TC) element, is negatively biased (see Figure M-1). As shown, the waste stream MS/MSD average and both upper and lower error bars fall below the WAP acceptance criteria. Analysis of this element is difficult and recovery problems are not an uncommon occurrence. The summarized data in Appendix B, Table B-1 for Sb reflects that this element is problematic for all batches (ACL97021M, ACL97022M, ACL99004M). The Sb data has a 5-45% negative bias due to the matrix effects. However, because this element does not affect the characterization of this waste stream from a waste stream profile perspective (such as force the consideration of a Resource Conservation Recovery Act [RCRA] code addition), no further discussion is necessary.

Chromium (Cr) MS/MSD data average was recovered within the WAP criteria; however, the lower error bar falls outside the lower limit indicating a potential 0-15% negative bias. The mean concentration of Cr in the waste stream is approximately one half of the RTL and the maximum value detected in the preliminary data sample set for this waste stream is less than the TC limit. Based on this preliminary data and AK, the D007 code should not be added

Mercury (Hg) MS/MSD data indicates a negative bias (see Figure M-1). As shown, the waste stream MS/MSD average and the lower error bar fall below the WAP acceptance criteria. The Hg data has a potential 0-30% negative bias due to matrix effects. The data average is likely indicative of the concentration of mercury in this waste stream based on this matrix dependent performance indicator. Since the average concentration of Hg is below the RTL by approximately two orders of magnitude, the bias applied due to matrix effects is that of a conservative nature. Therefore, there is no negative impact on the data use and the D009 code should not be applied.

Nickel (Ni) is not a TC element. The average MS/MSD recovery is within the WAP criteria, but the error bar falls below the low end of the limit. A slight negative bias, approximately 1%, is indicated. Since this element is not a TC element, this bias, due to matrix effects, should have no negative impact on data use.

The average recovery and the lower end of the error bar for thallium (Tl) fall below the WAP criteria, thus indicating a 0-30% negative bias due to matrix effects. However, because this element does not affect the characterization of this waste stream from a waste stream profile perspective (such as, for the consideration of a RCRA code addition), no further discussion is necessary.

Zinc MS/MSD data indicate a fairly large variance for this waste stream as demonstrated by the errors bars that extend outside the WAP criteria on both the high and low ends of the range. Also, the average recovery for zinc (Zn) exceeds the WAP criteria by approximately 5% indicating a potential positive bias. This is due to the fact that the MS/MSD recoveries for Zn in one batch (ACL99004M) exhibited inhomogeneity of the sample matrix. Since it is not a TC element and the slight positive bias would be conservative, no further discussion is necessary.

As reflected Figure M-1, the RPD averages meet the WAP precision criteria for every element except for Zinc. The average RPD for this analyte demonstrated a potential positive bias approximately 10% for the precision of this waste stream. This outlier is due to one data set (ACL99004M) that exceeded the 30% RPD criteria due to the inhomogeneity of a sample matrix. Since Zinc is not a TC element and the positive bias would be conservative, no further discussion is necessary.

A-1.2 Preliminary Metals Data: Laboratory Control Sample Assessment

The WAP, Table B3-8 footnote b, allows the laboratory to establish acceptance criteria for solidified waste LCSs. That is to say that solid LCS samples are not held to the ± 20% criteria. While Figure M-2 uses the ± 20% criteria for result comparison purposes, this figure must be interpreted carefully. Every LCS result generated by the laboratory for this preliminary data was within the laboratory established acceptance criteria, as allowed by the WAP. These data indicate that the laboratory was operating in control during the analysis of all the preliminary samples associated with the Special Setups Sludge waste stream.

Table M-2. Analytical Chemistry Laboratory metals quality control average percent recovery of LCSs.

Element	LCS (% Recovery)	LCS Standard Deviation	Data Points (n)
Sb	98.7	25.1	3
As	99.4	2.7	3
Ba	101.2	10.5	3
Be	101.0	3.9	3
Cd	100.1	2.8	3
Cr	100.1	11.2	3
Pb	106.0	7.4	3
Hg	106.1	4.5	4
Ni	99.2	5.5	3
Se	96.4	7.4	3
Ag	103.7	5.3	3
Tl	111.8	14.2	3
V	98.4	5.6	3
Zn	100.6	4.7	3

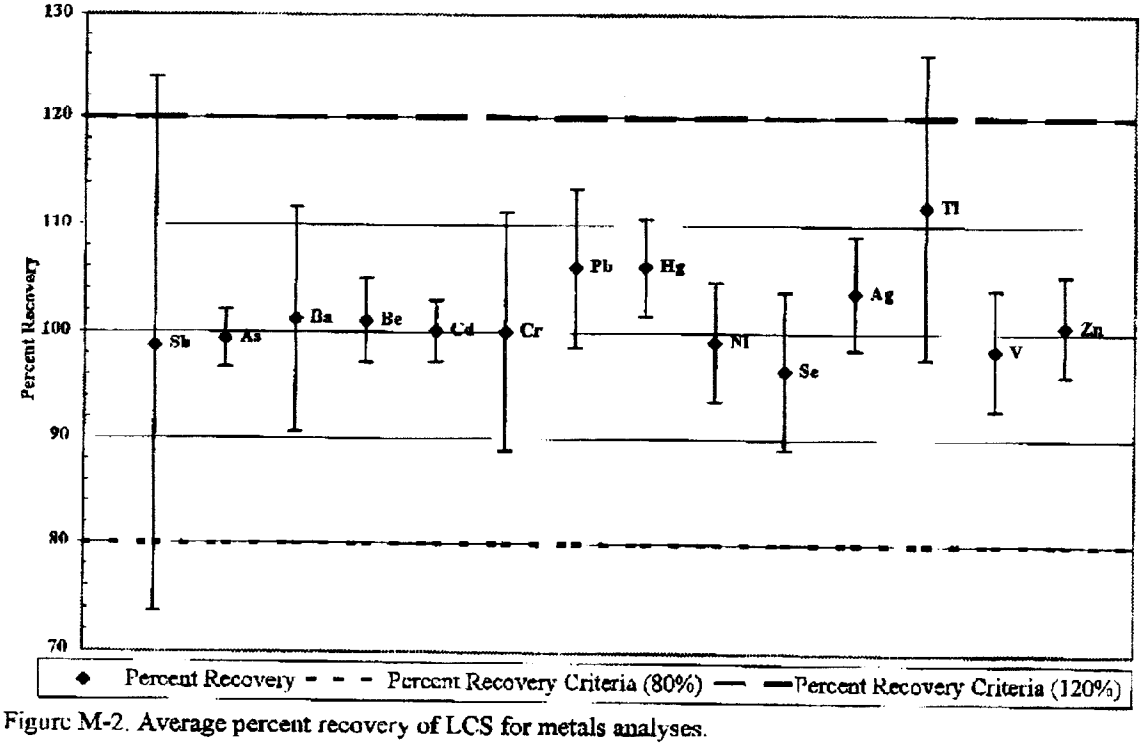

Figure M-2. Average percent recovery of LCS for metals analyses.

A-2 Preliminary Semivolatile Organic Compound Data: Data Use Assessment

The SVOC data have been assessed from a waste stream perspective, that is, waste stream averages, for the performance indicators MS/MSD and LCS. The performance of these indicators will demonstrate whether the preliminary SVOC data can be used for waste stream profile conclusions. Data results for individual compounds whose averages indicate a potential bias, that is, the averages and/or associated error fall outside the WAP criteria, are discussed individually and compared to AK expectations wherever possible.

The MS/MSD and LCS data are summarized using a combination of tables and graphs. The average data used to generate the MS/MSD graphs; Figures SV-1 and SV-2 are presented in Table SV-1. The figures contain the percent recoveries for the MS/MSDs and the RPDs respectively. The LCS results are illustrated in Figure SV-3 and summarized in Table SV-2.The data used to generate the LCS and MS/MSD graphs are presented by compound in Appendix C, Table C-1. The summary provided by Appendix C, Table C-1, allows a quick view of all the data associated with each compound.

Table SV-1. Analytical Chemistry Laboratory SVOC quality control average percent recovery and RPD of MS/MSDs.

Compound	Average % Recovery MS/MSD	Average MS/MSD Standard Deviation	Average RPD	Spikes (n) MS vs. RPD
1,4-Dichlorobenzene	61.5	9.3	19.3	6/3
2,4-Dinitrotoluene	67.1	11.2	23.5	6/3
Hexachloroethane	64.0	11.9	30.5	4/2
Nitrobenzene	69.0	12.1	29.5	4/2
Pentachlorophenol	0	--	NA*	2/0

*The RPD was not calculated because of the lack of recovery for the MS/MSD pair.

Compounds that reflected problems from a waste stream average perspective are discussed individually below, first, from the matrix effects indicated, and second from a laboratory control perspective.

A-2.1 Preliminary Semi-volatile Organic Compound Data: Matrix Spike/Matrix Spike Duplicate Data Assessment

Four of the five compound's average MS/MSD reported data points were within the WAP criteria with the exception of pentachlorophenol. All of the calculated RPD averages met criteria, as shown in Figure SV-2. Pentachlorophenol RPD was not calculated because of the lack of recovery for the MS/MSD pair due to matrix effects for the one batch (ACL99004S) that this compound was analyzed as a MS/MSD component. Figure SV-1 shows a general negative bias due to matrix effects as illustrated by the location of the average data points. However, all lower ends of the error bars fall within the criteria for all the MS/MSD compounds except the aforementioned pentachlorophenol.

Pentachlorophenol MS/MSD data were below the WAP criteria as indicated on Figure SV-1. This negative bias was due to matrix effects. All sample results for this compound were non-detects. The UCL_{90} for this compound is less than the RTL by four orders of magnitude. The D037 code should not be applied.

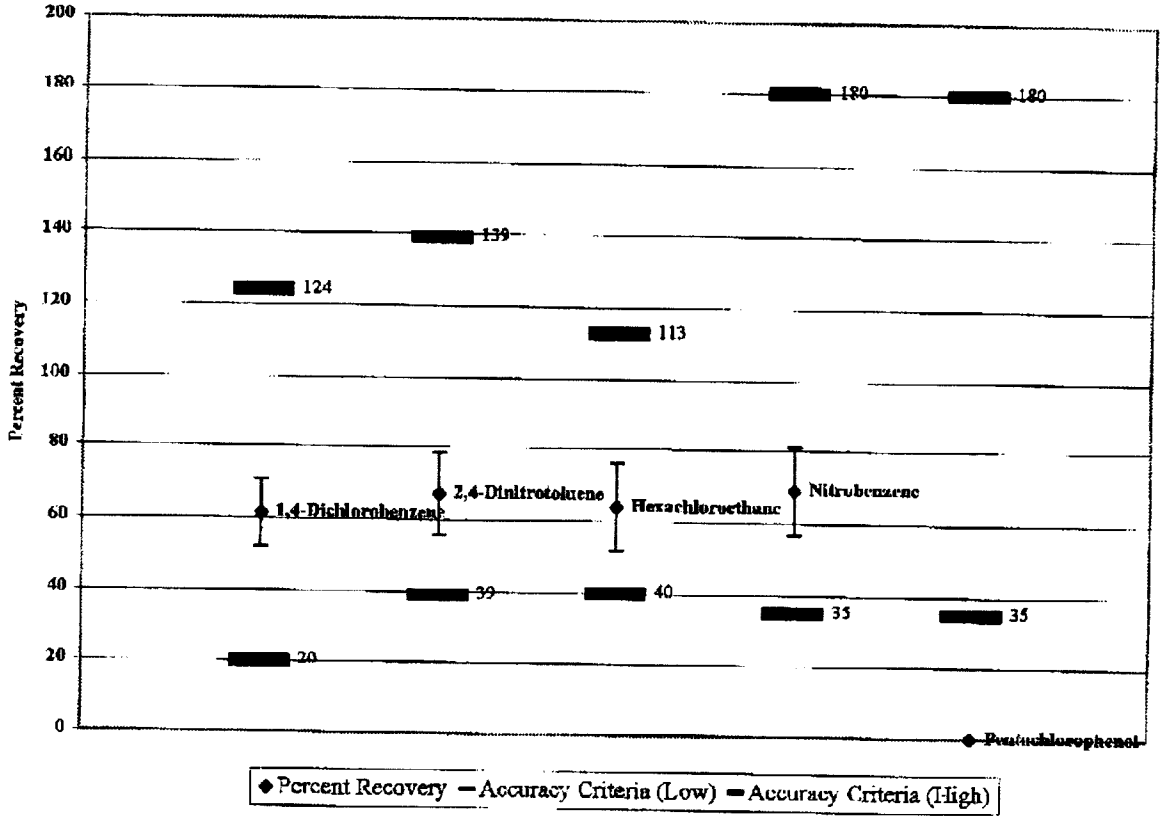

Figure SV-1. Average percent recovery of MS/MSDs for SVOC analyses.

The RPD averages, as shown in Figure SV-2, for the MS/MSDs meet the WAP criteria. Note that if the averages are below the solid lines on the graph, the compound RPD is acceptable. The sample results for this compound were all none detects, therefore the UCL_{90} could not be calculated. The mean sample specific detection limit was reported at five to six times below the RTL. The D034 code should not be applied.

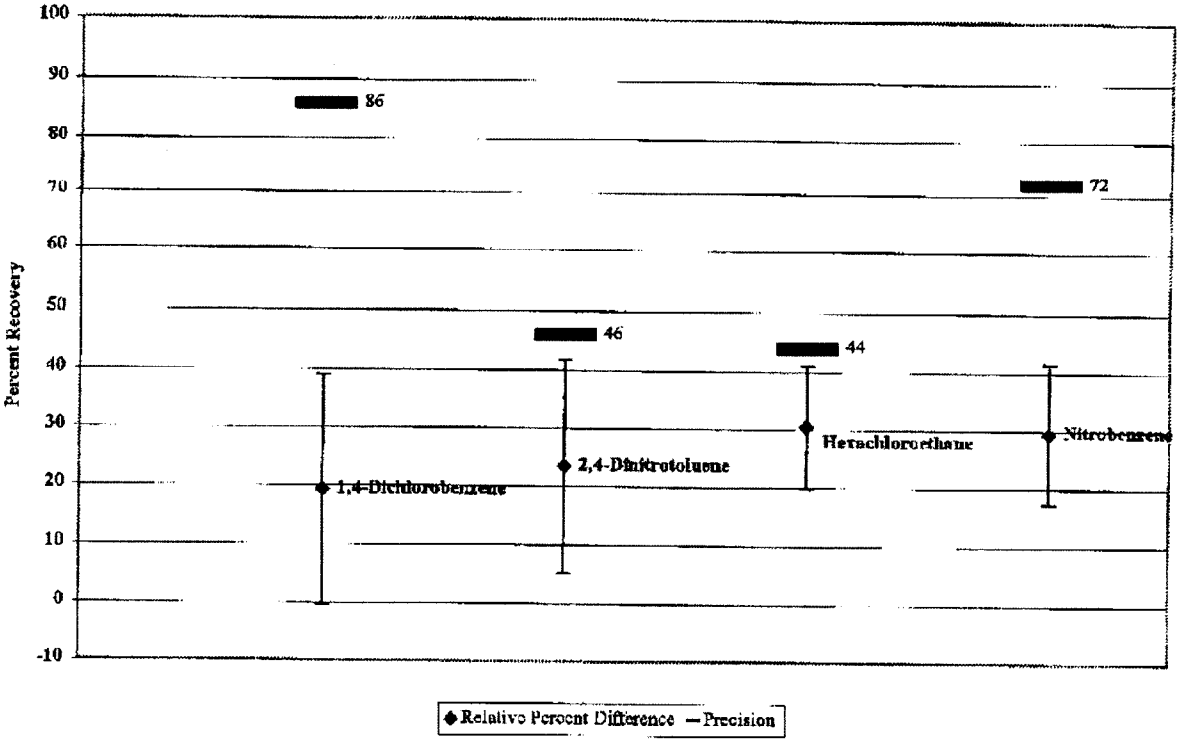

Figure SV-2. Average RPDs of MS/MSDs for SVOC analyses.

A-2.2 Preliminary Semi-volatile Organic Compound Data: Surrogate Compound Data Assessment

The surrogate averages from IDC 700 and 801 samples are addressed in the following section. The detailed data summary is in Appendix C, Table C-2.

All of the surrogate compound recoveries were within the acceptance criteria, as reflected in Figures SV-3 through Figure SV-6. The surrogates used were nitrobenzene-d5 (NBZ), 2-fluorobiphenyl (FBP), 2-fluorophenol (2FP), and 2,4,6-tribromophenol. The surrogate recoveries are plotted by compound. These data were used to produce laboratory generated acceptance criteria, that is, a mean, standard deviation, and 3-σ values, for this specific waste stream (per the WAP, Table B3-5). Exceptions are discussed individually below.

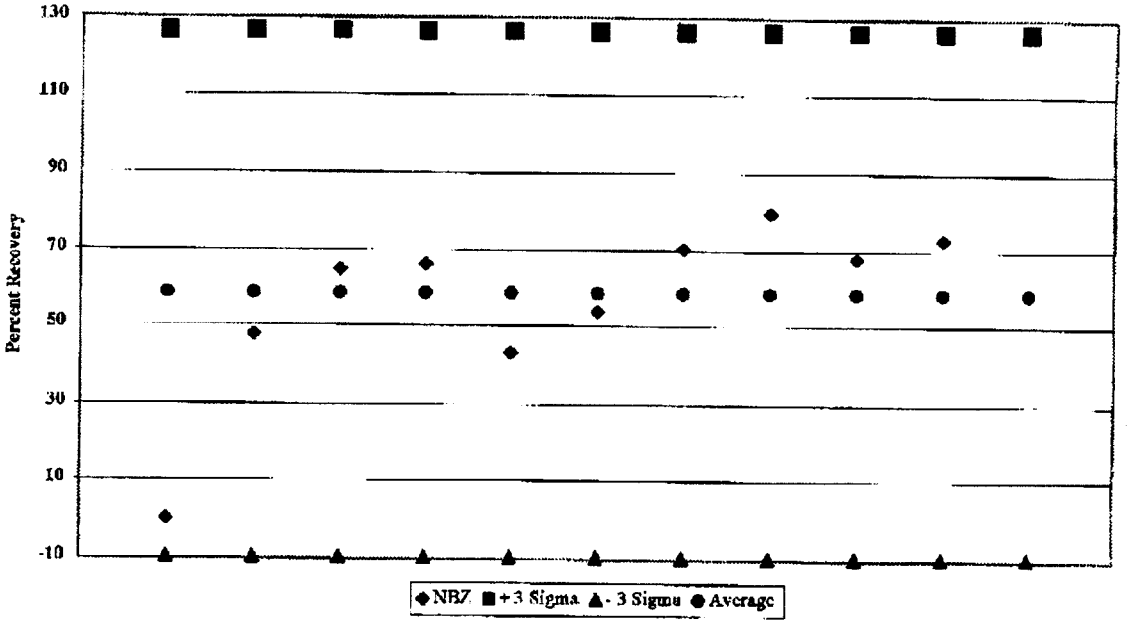

Figure SV-3. Average percent recovery of semi-volatile organic compound analyses surrogate nitrobenzene-d5.

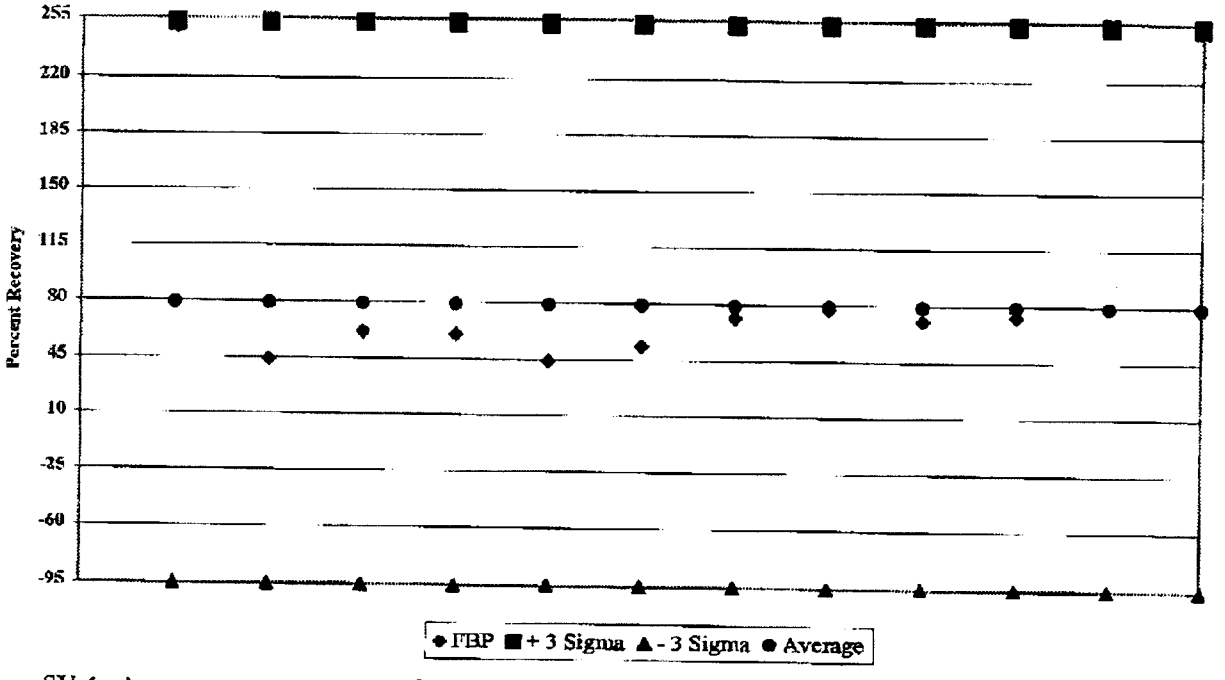

Figure SV-4. Average percent recovery of semi-volatile organic compound analyses surrogate 2-fluorobiphenyl.

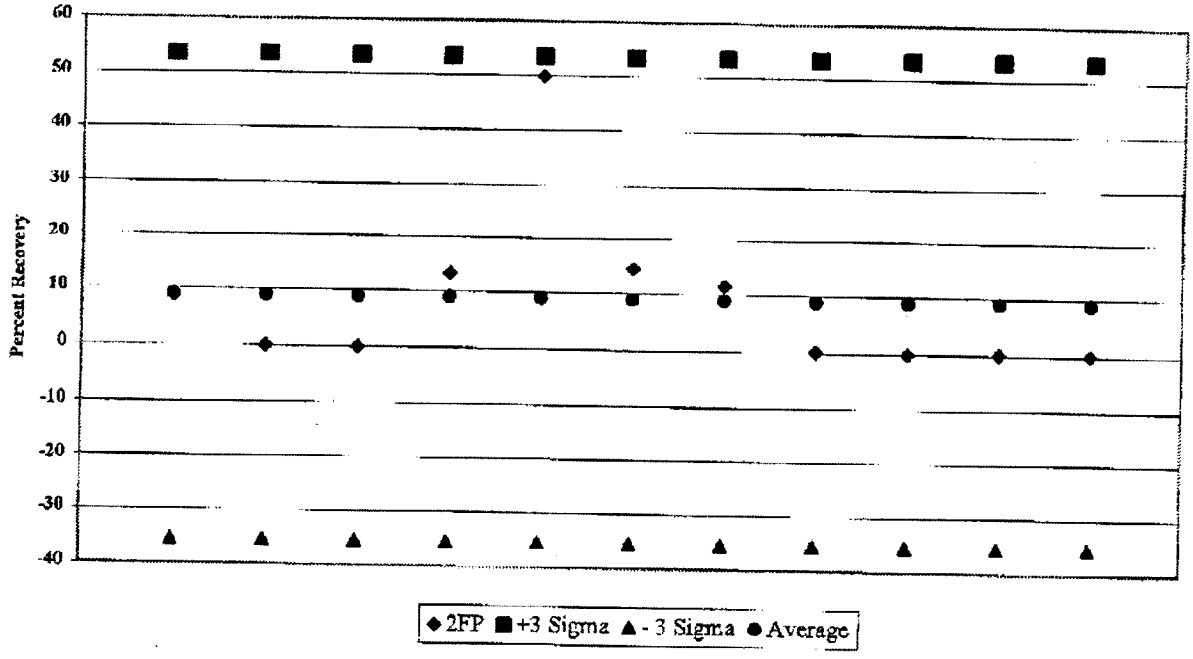

Figure SV-5. Average percent recovery of semi-volatile organic compound analyses surrogate 2-fluorophenol.

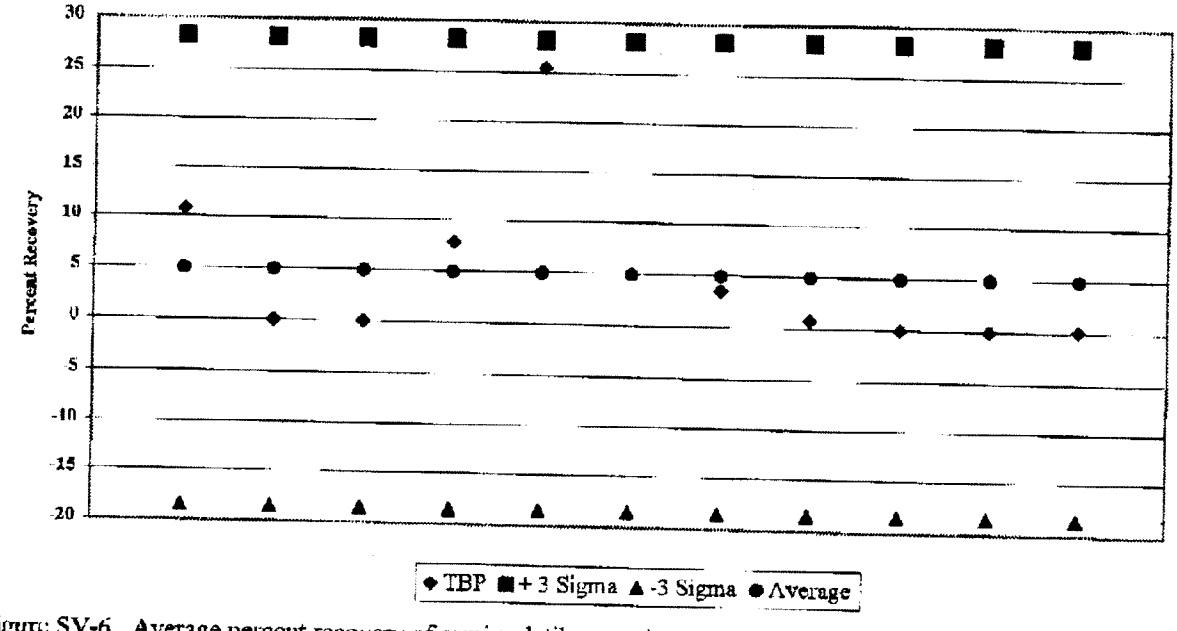

Figure SV-6. Average percent recovery of semi-volatile organic compound analyses surrogate 2,4,6-tribromophenol.

A-2.3 Preliminary Semi-volatile Organic Compound Data: Laboratory Control Samples Data Assessment

All averages and associated error for the LCS, as shown in Figure SV-7, meet the WAP criteria. Based on the performance of this matrix independent standard, the laboratory method was performing consistently and in control relative to this independent check sample.

Table SV-2. Analytical Chemistry Laboratory SVOC quality control average percent recovery of LCSs.

Compound	% Recovery LCS	LCS Standard Deviation	Count (n)
1,4-Dichlorobenzene	96.7	3.6	3
2,4-Dinitrophenol	117		1
2,4-Dinitrotoluene	90.7	4.7	3
Hexachlorobenzene	94.1		1
Hexachloroethane	102.2	8.5	3
m/p-Methylphenol	97.8		1
Nitrobenzene	96.0	2.8	3
o-Methylphenol	97		1
o-Dichlorobenzene	94		1
Pentachlorophenol	115		1

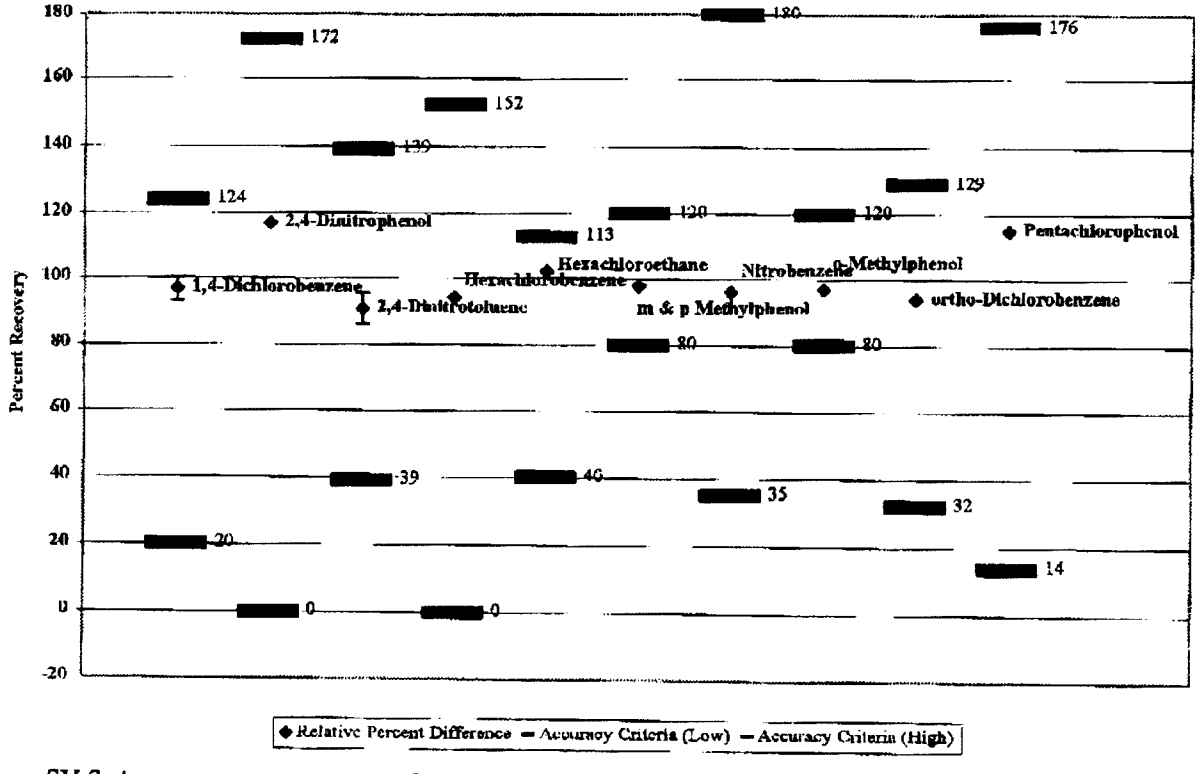

Figure SV-7. Average percent recovery of LCSs for SVOC analyses.

A-3. Preliminary Purgeable Volatile Organic Compound Data: Data Use Assessment

The purgeable volatile organic compound (VOC) data have been assessed from a waste stream perspective (waste stream averages) for the performance indicators, MS/MSD, LCS, and surrogates. The performance of these indicators will demonstrate whether the preliminary VOC data can be used to assess additional sampling needs and/or impacts to the waste stream profile. Data results for individual compounds whose averages indicate a potential bias, such as, the averages and associated error bars fall outside the WAP criteria, are discussed individually and compared to AK expectations wherever possible.

The MS/MSD and LCS results discussed in this appendix are summarized using a combination of tables and graphs. The average data used to generate the MS/MSD graph, Figure V-1, are presented in Table V-1. Figure V-2 reflects the RPD results for the MS/MSD averages. The LCS results are illustrated in Figure V-6 and summarized by compound in Table V-2. The data used to generate these graphs are presented by compound in Appendix D, Tables D-1 and D-2. The summaries provided by Tables D-1 and D-2, Appendix D, allow a quick view of the data associated with each compound.

The recovery data for the three surrogate compounds are presented in detail in Appendix D, Table D-3, and was used to generate graphs (Figures V-3, V-4, and V-5).

In general, those data that individually did not meet WAP criteria are indicated with an "**" as appropriate. Any nonconformance reports (NCRs) generated throughout the analysis were considered and if the disposition for the data was "reject" the data were not used.

Compounds that reflected problems from a waste stream average perspective are discussed individually, first, from the matrix effects indicated, and second from a laboratory control perspective.

A-3.1 Preliminary Purgeable Volatile Organic Compound: Matrix Spike/Matrix Spike Duplicate Data Assessment

The data graphically shown in Figure V-1 illustrate that the average MS/MSD results with the associated errors all fall within the WAP criteria. Upper and lower limit values for individual compounds are represented by solid lines (each compound has a unique limit). Figure V-2 reflects the RPD results and WAP acceptance criteria are represented by dotted lines. Note that the average RPD data are all below the WAP acceptance criteria shown on the graph, demonstrating that the data meet WAP precision requirements.

Table V-1. Analytical Chemistry Laboratory quality control average percent recovery of VOC MS/MSDs.

Compound	% Recovery MS/MSD	MS Standard Deviation	Count (n)	RPD	Count (n)
1,1-Dichloroethylene	92.0	11.6	4	8.9	2
Benzene	85.3	3.4	4	4.9	2
Chlorobenzene	101.5	4.0	4	1.6	2
Toluene	102.8	4.6	4	6.3	2
Trichloroethylene	106.2	5.0	4	3.7	2

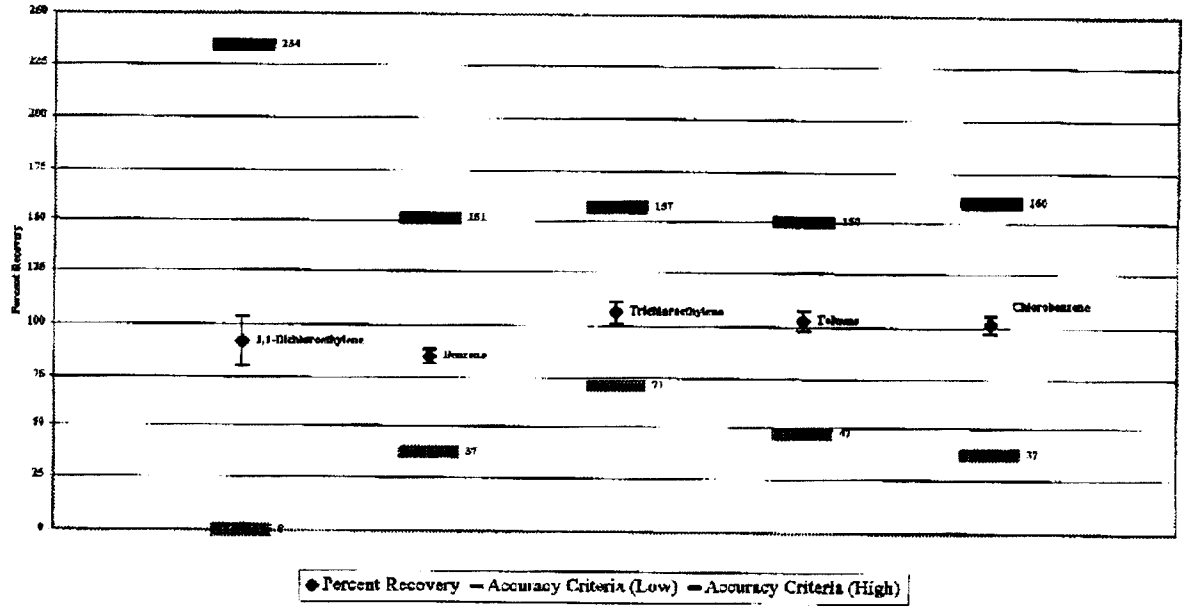

Figure V-1. Average percent recovery of MS/MSD for VOC analyses.

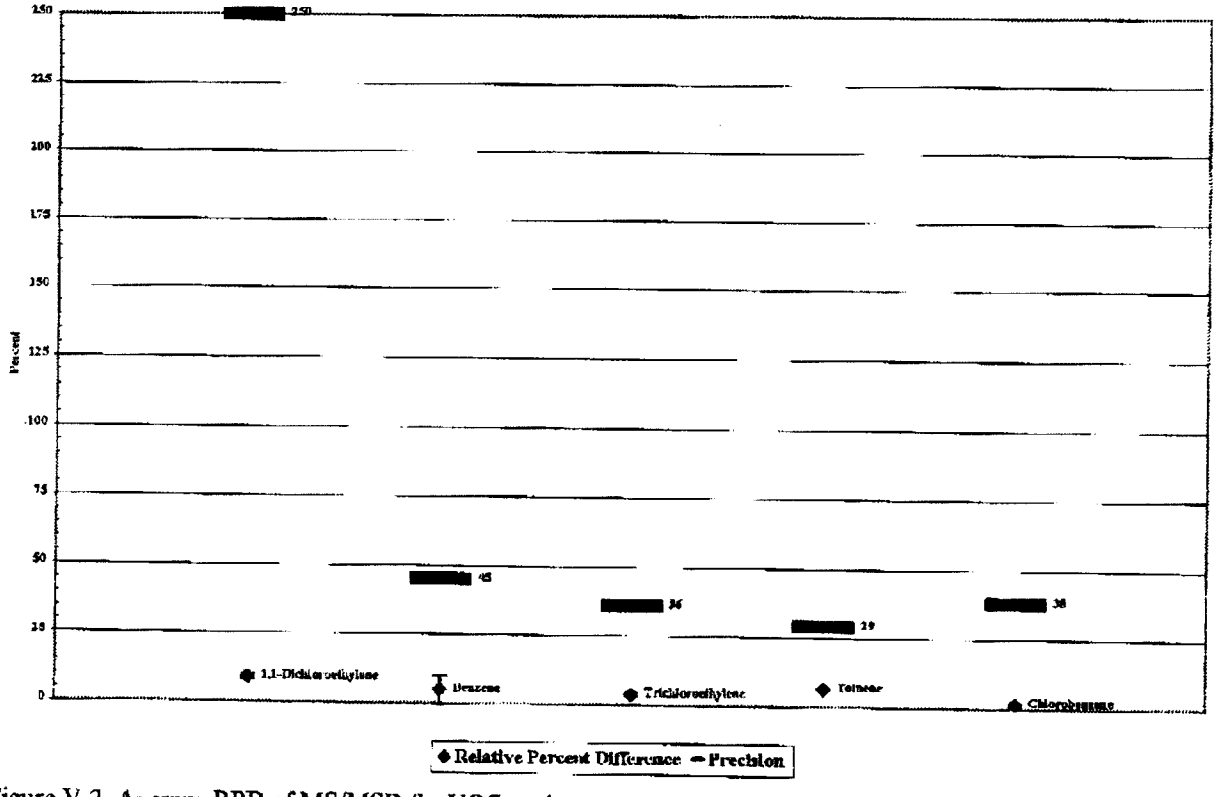

Figure V-2. Average RPD of MS/MSD for VOC analyses.

A-3.2 Preliminary Purgeable Volatile Organic Compound: Surrogate Compound Data Assessment

All of the surrogate compound recoveries were within the acceptance criteria, as reflected in Figures V-3 through Figure V-5. The surrogates used were 1,2-dichloroethane-d4 (DCA), toluene-d8 (TOL), and 4-bromofluorobenzene (BFB). The surrogate recoveries are plotted by compound. These data were used to produce laboratory generated acceptance criteria, that is, a mean, standard deviation, and 3-σ values, for this specific waste stream (per the WAP, Table B3-5). Exceptions, if any, are discussed individually below.

In general, the performance of the VOC surrogates for all analyzed samples associated with this waste stream was acceptable, that is, the recoveries were within the 3-σ limits established per the WAP criteria, Table B3-5.

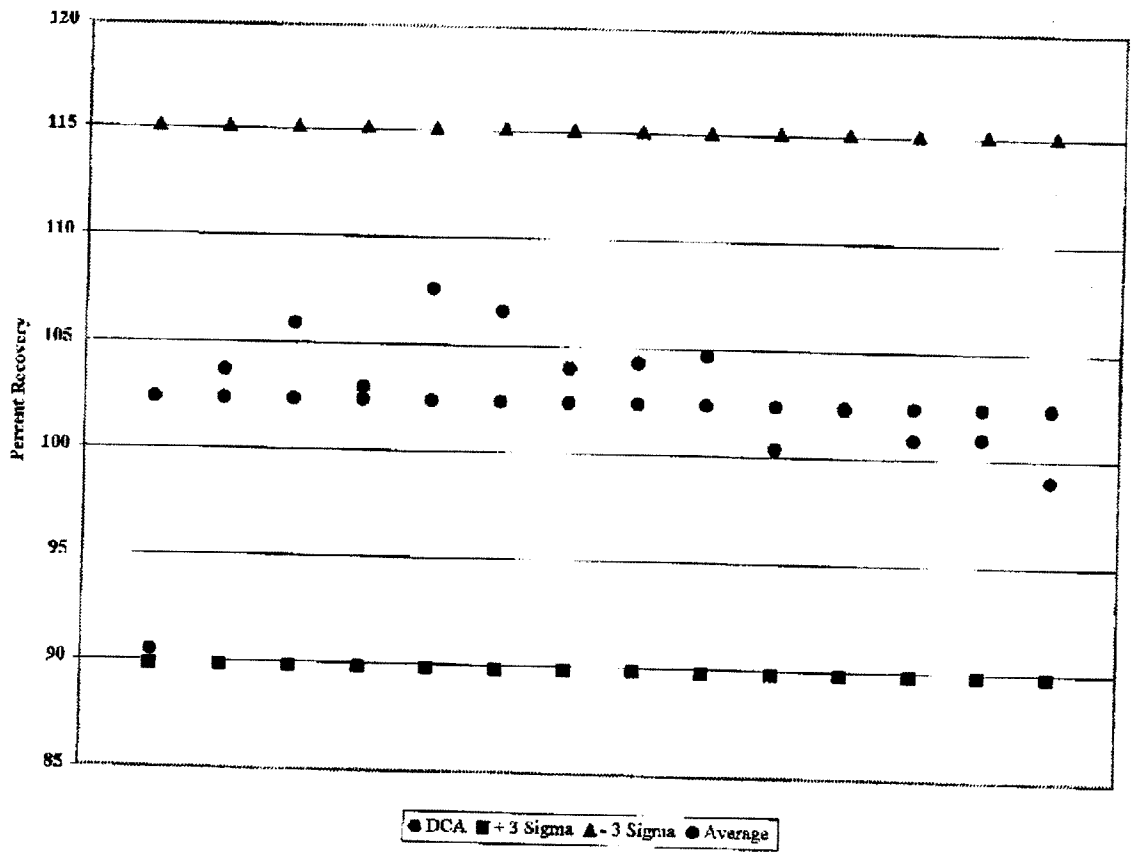

Figure V-3. Average percent recovery of surrogate DCA VOC analyses.

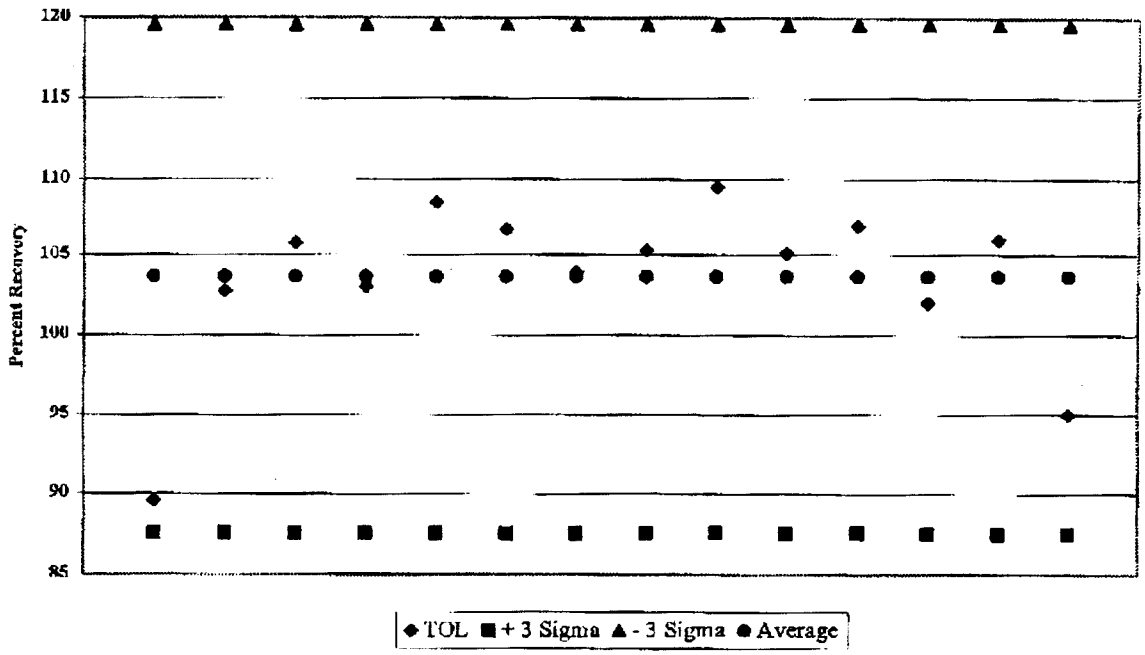

Figure V-4. Average percent recovery of surrogate TOL VOC analyses.

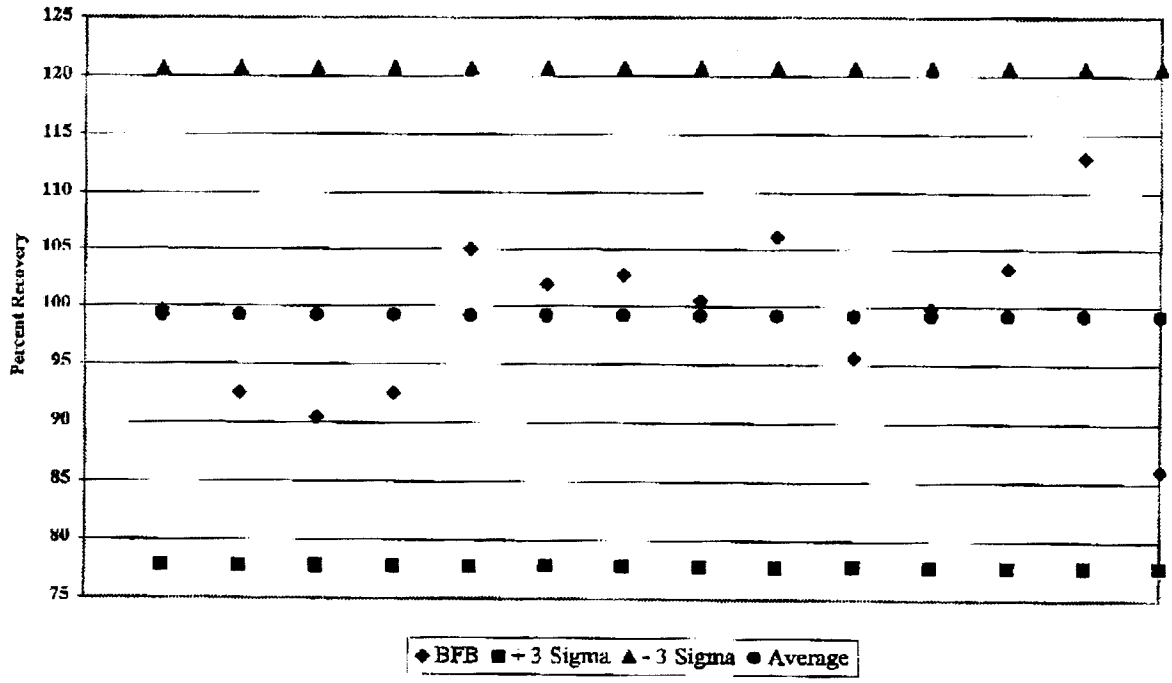

Figure V-5. Average percent recovery of surrogate BFB VOC analyses.

A-3.3 Preliminary Purgeable Volatile Organic Compound: Laboratory Control Sample Data Assessment

The preliminary LCS average data and associated standard deviations were all well within the WAP criteria listed in Table B3-4 (given in Table V-2 and illustrated in Figure V-6). This demonstrates that the laboratory was performing this analysis consistently and in control throughout the analysis of these samples.

Table V-2. Analytical Chemistry Laboratory quality control average percent recovery of VOC LCSs.

Compound	LCS % Recovery	LCS Standard Deviation	Count (n)
1,1,1-Trichloroethane	99.63	4.63	2
1,2-Dichloroethane	114.30	5.02	2
Carbon Tetrachloride	108.58	0.67	2
Chlorobenzene	95.53	1.31	2
Chloroform	99.98	5.69	2
Ethyl benzene	107.68	0.60	2
m-Xylene and p-Xylene	90.95	1.27	2
o-Xylene	87.05	0.07	2
Tetrachloroethylene	79.55	3.82	2
Toluene	108.00	5.73	2

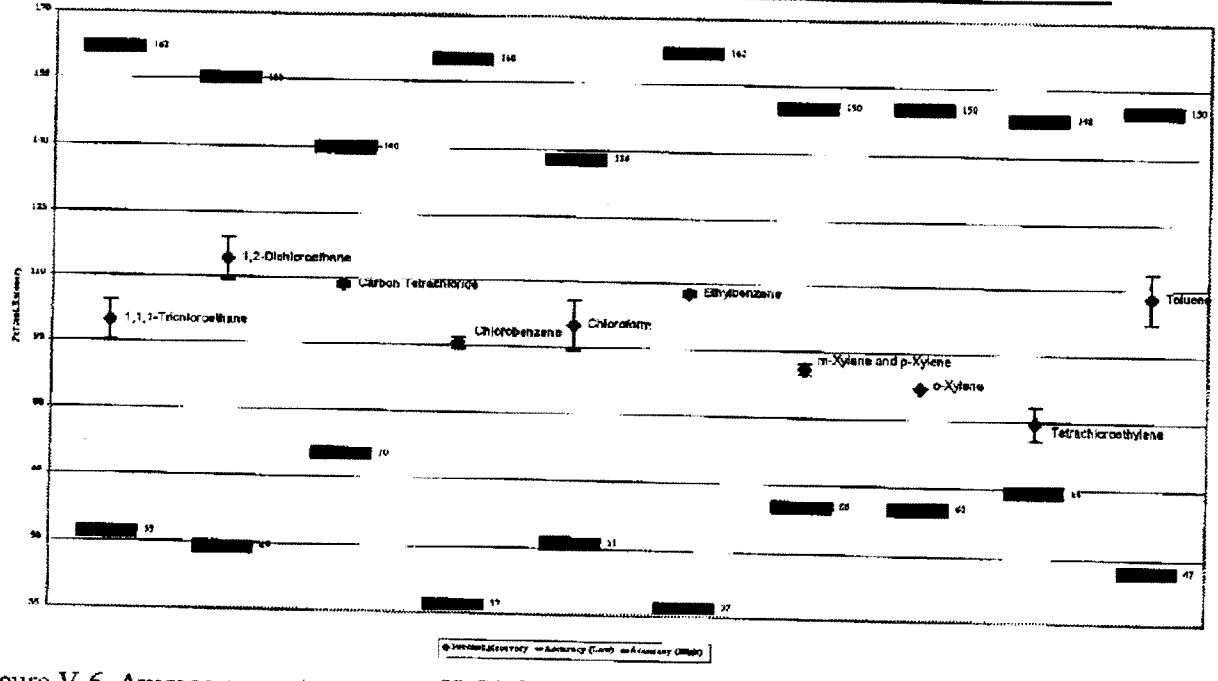

Figure V-6. Average percent recovery of LCS for VOC analyses.

A-4. Preliminary Non-halogenated Volatile Organic Compound Data: Data Use Assessment

The NH VOC data have been assessed from a waste stream perspective (waste stream averages) for the performance indicators, MS/MSD and LCS. These performance indicators show that the NH VOC data are acceptable for use as preliminary data. In all cases except methanol and ethyl ether, individual compound averages and associated error bars (derived from the standard deviations) fell within the WAP criteria. The deviant compounds are discussed individually below.

The MS/MSD and LCS results discussed in this section are summarized using a combination of tables and graphs. The data averages used to generate the MS/MSD graph, Figure N-1, are summarized in Table N-1. The average LCS results are illustrated in Figure N-2 and summarized in Table N-2. The data used to generate these graphs are presented by compound in Appendix E, Table E-1. The summary provided in Table E-1, Appendix E, allows for a quick view of all the data associated with each compound.

Ethyl ether indicates a slight negative bias as indicated by the average being in the lower portion of the control limits and the lower error bar extending approximately 5% below the low limit. The overall average for this compound indicates that the slight negative bias due to matrix effect has no negative impact on this waste stream. No further discussion is needed

Methanol indicated a positive bias in the waste stream average [576.1%] and a wide variance in the standard deviation [781.3]. This is due to one batch (ACL97021N) that was out of control limits due to disproportional spike-added amounts as discussed individually below. If this batch were to be excluded from the waste stream average statistics, the average MS/MSD recovery would be 99.8 % and the RPD would be 3.2, rather than 19.8. However, the positive bias associated with this compound indicates that the use of this data would be conservative.

A-4.1 Preliminary Non-halogenated Volatile Organic Compound Data: Matrix Spike/Matrix Spike Duplicate Assessment

All the MS/MSD averages, except methanol, fall within the WAP criteria of 60-150% recovery as reflected in Figure N-1. All the associated error bars except methanol and the lower error bar of ethyl ether fall within the WAP criteria. These performance data indicate that the associated sample data are appropriate for use "as is."

- ACL97021N – Although results exceeded acceptance criteria for the MS/MSD, there is no indication that the high recoveries were due to matrix interference since the ratio of sample result to the amount of spike added was out of proportion (i.e. sample result = 3000 ppm and spike added = 100 ppm) therefore it is difficult to accurately determine spike recovery in this indigenous sample matrix.

- ACL97022N – The results exceeded acceptance criteria for the MS/MSD for ethyl ether. There was a matrix interference problem as evidenced in the matrix spike and the matrix spike duplicate.

The average RPDs associated with the NH VOC MS/MSD data, also illustrated in Figure N-1, meet the WAP criteria. Note that if the data points fall below the solid line of the graph, the compound met the RPD criteria.

Table N-1. Analytical Chemistry Laboratory quality control average percent recovery of MS/MSDs for NH VOCs.

Compound	Average Percent Recovery MS/MSD	Standard Deviation	Batches (n)	RPD	Count (n)
Acetone	97.7	2.0	6	1.7	3
Butanol	102.2	1.9	6	1.8	3
Ethyl ether	76.6	20.1	6	3.2	3
Isobutanol	102.9	2.4	6	1.5	3
Methanol	576.1	781.3	6	19.8	3
Methyl ethyl ketone	96.8	5.2	6	2.5	3
Pyridine	96.6	2.3	6	0.7	3

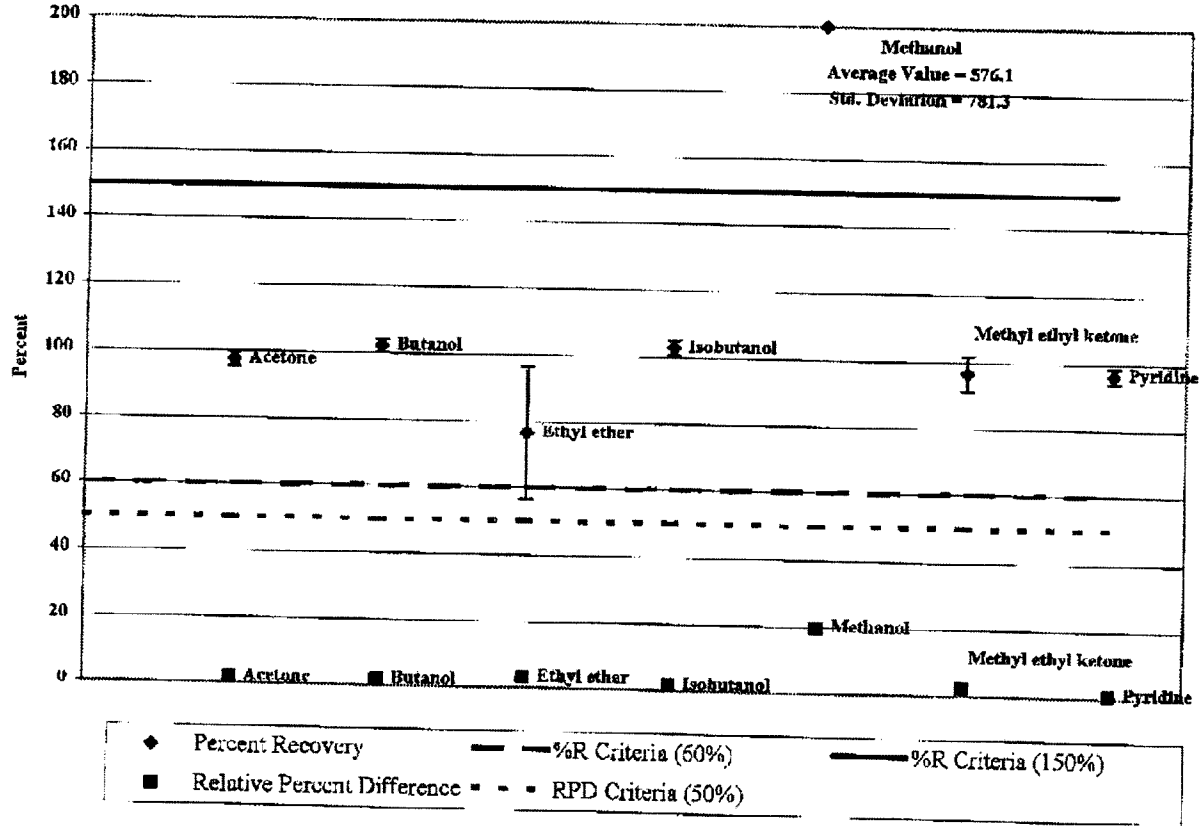

Figure N-1. Analytical Chemistry Laboratory Average percent recovery and RPD of MS/MSDs for NH VOC analyses.

A-4.2 Preliminary Non-halogenated Volatile Organic Compound Data: Laboratory Control Sample Assessment

The preliminary LCS average data and associated standard deviations were all well within the WAP criteria of 60-150% (illustrated in Figure N-2). This demonstrates that the laboratory was performing this analysis consistently and in control throughout the analysis of these samples.

Table N-2. Analytical Chemistry Laboratory quality control average percent recovery of LCSs for NH VOC.

Compound	LCS % Recovery	LCS Standard Deviation	Count (n)
Acetone	97.9	6.3	3
Butanol	100.7	3.3	3
Ethyl ether	97.4	5.0	3
Isobutanol	102.0	2.8	3
Methanol	98.2	2.0	3
Methyl ethyl ketone	100.4	3.3	3
Pyridine	96.0	4.2	3

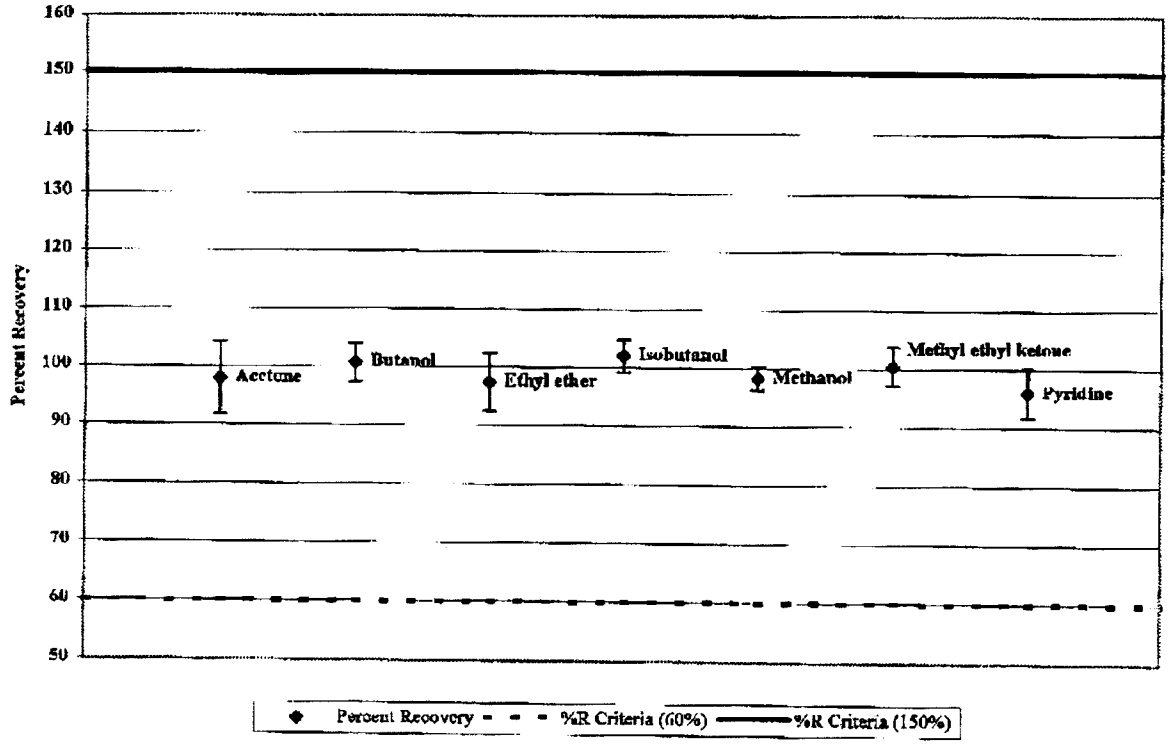

Figure N-2. Analytical Chemistry Laboratory Average percent recovery of LCS for NH VOC analyses.

Appendix B

Metals Back-up Data

Table B-1. Analytical Chemistry Laboratory Metals quality control MS/MSD and LCS summary by element.

		MS (80 – 120 %)			LCS*	
Element	Batch No	MS (% Recovery)	MSD (% Recovery)	RPD (30%)	LCS (% R)	LCS2 (% R)
Antimony	ACL97021M	72.7	62.0	18.9	120.2	
	ACL97022M	20.9	32.2	38.7	104.8	
	ACL99004M	68.6	74.4	8.5	71.2	
MS/MSD Average		55.1		22.0	98.7	
Standard Deviation		22.8		15.3	25.1	
Count (n)		6		3	3	
Arsenic	ACL97021M	103.0	92.3	13.7	96.3	
	ACL97022M	106.0	104.5	2.3	101.0	
	ACL99004M	104.6	104.8	1.0	100.9	
MS/MSD Average		102.5		5.7	99.4	
Standard Deviation		5.1		7.0	2.7	
Count (n)		6		3	3	
Barium	ACL97021M	95.2	91.9	6.3	96.9	
	ACL97022M	102.6	99.7	3.6	113.2	
	ACL99004M	94.2	93.3	0.2	93.5	
MS/MSD Average		97.9		3.4	101.2	
Standard Deviation		5.2		3.1	10.5	
Count (n)		6		3	3	
Beryllium	ACL97021M	95.1	96.8	1.8	97.3	
	ACL97022M	99.8	100.5	0.3	105.1	
	ACL99004M	82.7	102.6	19.5	100.7	
MS/MSD Average		98.2		7.2	101.0	
Standard Deviation		3.3		10.7	3.9	
Count (n)		6		3	3	
Cadmium	ACL97021M	86.7	91.0	1.3	99.6	
	ACL97022M	95.5	89.9	6.3	97.6	
	ACL99004M	79.5*	87.4	8.7	103.2	
MS/MSD Average		88.3		5.4	100.1	
Standard Deviation		5.3		3.8	2.8	
Count (n)		6		3	3	
*Average is not bolded as the average, when reported to two significant figures, is 80% and the limits are 80-120%						
Chromium	ACL97021M	83.4	82.0	3.6	102.3	
	ACL97022M	98.3	96.8	2.2	110.0	
	ACL99004M	53.6	114.3	42.4	87.9	
MS/MSD Average		88.1		16.1	100.1	
Standard Deviation		20.6		22.8	11.2	
Count (n)		6		3	3	
Lead	ACL97021M	101.2	103.9	0.8	108.1	
	ACL97022M	107.6	108.1	0.4	112.2	
	ACL99004M	84.7	99.2	14.5	97.8	
MS/MSD Average		100.8		5.2	106.0	
Standard Deviation		8.6		8.0	7.4	
Count (n)		6		3	3	

Table B-1. (continued).

Element	Batch No	MS (80 - 120 %) MS (% Recovery)	MSD (% Recovery)	RPD (30%)	LCS* LCS (% R)	LCS2 (% R)
Mercury	ACL97021M	91.5	95.2	4.0	107.5	106.7
	ACL97022M	43.2	24.1	56.6	99.8	
	ACL99004M	86.4	89.4	3.5	110.5	
MS/MSD Average		71.6		21.4	106.1	
Standard Deviation		30.2		30.5	4.5	
Count (n)		6		3	4	
Nickel	ACL97021M	92.5	89.5	5.1	93.9	
	ACL97022M	98.1	91.6	5.2	104.9	
	ACL99004M	66.7	105.5	31.7	98.7	
MS/MSD Average		90.7		14.0	99.2	
Standard Deviation		13.1		15.3	5.5	
Count (n)		6		3	3	
Selenium	ACL97021M	104.1	101.5	6.1	100.0	
	ACL97022M	97.7	104.3	5.6	101.4	
	ACL99004M	96.1	94.7	0.6	87.9	
MS/MSD Average		99.7		4.1	96.4	
Standard Deviation		4.1		3.0	7.4	
Count (n)		6		3	3	
Silver	ACL97021M	99.1	96.7	4.5	101.5	
	ACL97022M	100.9	103.3	1.3	109.7	
	ACL99004M	72.0	104.0	29.9	99.9	
MS/MSD Average		96.0		11.9	103.7	
Standard Deviation		12.1		15.7	5.3	
Count (n)		6		3	3	
Thallium	ACL97021M	88.1	84.1	8.1	123.8	
	ACL97022M	51.6	47.4	9.4	115.6	
	ACL99004M	55.5	76.1	32.1	96.1	
MS/MSD Average		67.1		16.5	111.8	
Standard Deviation		17.1		13.5	14.2	
Count (n)		6		3	3	
Vanadium	ACL97021M	111.7	101.1	6.6	93.4	
	ACL97022M	104.2	98.2	4.6	104.5	
	ACL99004M	82.5	85.6	2.6	97.3	
MS/MSD Average		97.2		4.6	98.4	
Standard Deviation		11.2		2.0	5.6	
Count (n)		6		3	3	
Zinc	ACL97021M	95.6	99.4	0.2	97.5	
	ACL97022M	108.9	108.5	0.7	98.4	
	ACL99004M	0	327.4	123.8	106.0	
MS/MSD Average		123.3		41.6	100.6	
Standard Deviation		108.3		71.2	4.7	
Count (n)		6		3	3	

* Control limits are laboratory established per the WAP.
Reference: WAP Table B3-8, footnote b.

Appendix C

Semi-volatile Organic Compound Back-up Data

Table C-1. Analytical Chemistry Laboratory SVOC quality control MS/MSD and LCS summary by compound.

Compound	Batch #	Matrix Spikes*			LCS*
		% Recovery MS	% Recovery MSD	RPD*	% Recovery LCS
1,4-Dichlorobenzene	ACL97021S	50	75	40	100.8
	ACL97022S	52	62	17	94.5
	ACL99004S	64.7	65.2	0.77	94.7
Average		61.5		19.3	96.7
Standard Deviation		9.3		19.7	3.6
Count (n)		6		3	3
2,4-Dinitrotoluene	ACL97021S	56	86	43	87
	ACL97022S	56	70	21	89
	ACL99004S	65	69.4	6.5	96
Average		67.1		23.5	90.7
Standard Deviation		11.2		18.4	4.7
Count (n)		6		3	3
Hexachloroethane	ACL97021S	52	77	38	109.7
	ACL97022S	56	71	23	103.8
	ACL99004S				93
Average		64.0		30.5	102.2
Standard Deviation		11.9		10.6	8.5
Count (n)		4		2	3
Nitrobenzene	ACL97021S	56	82	38	98.8
	ACL97022S	62	76	21	93.3
	ACL99004S				95.9
Average		69.0		29.5	96.0
Standard Deviation		12.7		12.0	2.8
Count (n)		4		2	3
2,4-Dinitrophenol	ACL99004S				117
Hexachlorobenzene	ACL99004S				94.1
m/p-Methylphenol	ACL99004S				97.8
o-Methylphenol	ACL99004S				97
o-Dichlorobenzene	ACL99004S				94
Pentachlorophenol	ACL99004S	0	0	N/A**	115

* Control limits are laboratory established per the WAP.
Reference: WAP Table B3-6, footnote a.

N/A** Not applicable because the RPD is not calculated when both recoveries are zero (0).

Table C-2. Analytical Chemistry Laboratory SVOC quality control average percent recovery of surrogate compounds by batch.

Batch #	Sample #	Percent Recovery %R Surrogate NBZ	%R Surrogate FBP	%R Surrogate 2FP	%R Surrogate TBP
ACL97021S	ID00181310CM1	0*	250*	0*	0*
	ID00208410CM1RE	47.5	43.8	0	0
	ID00449510CM1	64.8	61.0	13.2	7.8
	ID00488410CM1	66.2	60.0	49.8	25.5
	ID00488420CM1	43.0	43.8	14.5	5
	ID01499010CM1	53.5	53.2	11.5	3.5
Average		45.8	85.3	14.8	7.0
Standard Deviation		24.3	81.0	18.3	9.6
Count (n)		6	6	6	6
ACL97022S	ID00208410CM1	76.5	63	8.8	10.8
Average		76.5	63	8.8	10.8
Standard Deviation					
Count (n)		1	1	1	1
ACL99004S	ID01542610CM1	70.4	71.4	0.2	0.8
	ID00846320CM1DL10	80.0*	77.0*	0*	0*
	ID00846310CM1RE	67.9	70.3	0.1	0
	ID01861210CM1	73.1	73.1	0.1	Detected**
Average		72.9	73.0	0.1	0.3
Standard Deviation		5.2	2.9	0.1	0.5
Count (n)		4	4	4	3
TOTALS FOR ALL BATCHES:					
	Average	58.4	78.8	8.9	4.9
	Standard Deviation	22.7	57.9	14.8	7.8
	Count (n)	11	11	11	11
	3 sigma	68.0	173.6	44.5	23.3
	+ 3 sigma	126.4	252.4	53.4	28.2
	- 3 sigma	-9.5	-94.8	-35.5	-18.5

NBZ = Nitrobenzene-d5
FBP = 2-Fluorobiphenyl
2FP = 2-Fluorophenol
TBP = 2,4,6-Tribromophenol

* These surrogates are reported with the numeric recovery and a "D" indicating the sample was diluted.

** This surrogate is only reported as "Detected." No numerical value is associated with this data point in the data package.

Appendix D

Volatile Organic Compound Back-up Data

Table D-1. Analytical Chemistry Laboratory VOC quality control MS/MSD and LCS summary by compound.

Compound	Batch #	Matrix Spikes			LCS
		% Recovery MS	% Recovery MSD	RPD*	% Recovery LCS
1,1,1-Trichloroethane	ACL97021V				96.35
	ACL97022V				102.90
Average					99.63
Standard Deviation					4.63
Count (n)					2
1,1-Dichloroethylene	ACL97021V	85.3	80.1	8.2	
	ACL97022V	106	96.4	9.5	
Average		92.0		8.9	
Standard Deviation		11.6		0.9	
Count (n)		4		2	
1,2-Dichloroethane	ACL97021V				117.85
	ACL97022V				110.75
Average					114.30
Standard Deviation					5.02
Count (n)					2
Benzene	ACL97021V	86.5	87.1	1.2	
	ACL97022V	80.2	87.3	8.5	
Average		85.3		4.9	
Standard Deviation		3.4		5.2	
Count (n)		4		2	
Carbon Tetrachloride	ACL97021V				109.05
	ACL97022V				108.10
Average					108.58
Standard Deviation					0.67
Count (n)					2
Chlorobenzene	ACL97021V	105.0	104.9	1.9	96.45
	ACL97022V	97.4	98.7	1.3	94.60
Average		101.5		1.6	95.53
Standard Deviation		4.0		0.4	1.31
Count (n)		4		2	2
Chloroform	ACL97021V				95.95
	ACL97022V				104.00
Average					99.98
Standard Deviation					5.69
Count (n)					2
Ethylbenzene	ACL97021V				107.25
	ACL97022V				108.10
Average					107.68
Standard Deviation					0.60
Count (n)					2
m,p-Xylene	ACL97021V				91.85
	ACL97022V				90.05
Average					90.95
Standard Deviation					1.27
Count (n)					2

Table D-1. (Continued).

Compound	Batch #	Matrix Spikes* % Recovery MS	% Recovery MSD	RPD*	LCS* % Recovery LCS
o-Xylene	ACL97021V				87.00
	ACL97022V				87.10
Average					87.05
Standard Deviation					0.07
Count (n)					2
Tetrachloroethylene	ACL97021V				76.85
	ACL97022V				82.25
Average					79.55
Standard Deviation					3.82
Count (n)					2
Toluene	ACL97021V	99.7	108.3	6.5	103.95
	ACL97022V	104.6	98.4	6.1	112.05
Average		102.8		6.3	108.00
Standard Deviation		4.6		0.3	5.73
Count (n)		4		2	2
Trichloroethylene	ACL97021V	108.5	110.7	0.2	
	ACL97022V	99.1	106.5	7.2	
Average		106.2		3.7	
Standard Deviation		5.0		4.9	
Count (n)		4		2	

* Control limits are laboratory established per the WAP.

Reference: WAP Table B3-4, footnote a.

Table D-2. Analytical Chemistry Laboratory VOC quality control average percent recovery of surrogate compounds by batch.

Batch #	Sample #	DCA %Recovery	TOL %Recovery	BFB %Recovery
ACL97021V	ID001813101V1	90.5	89.6	99.6
	ID001813102V1	103.7	102.7	92.5
	ID002084101V1	105.9	105.8	90.4
	ID002084102V1	103.0	103.0	92.5
	ID004495101V1	107.6	108.5	105.0
	ID004495102V1	106.6	106.7	101.9
	ID004884101V1	104	103.9	102.7
	ID004884102V1	104.3	105.3	100.5
	ID004884201V1	104.7	109.5	106.1
	ID004884202V1	100.4	105.1	95.6
	ID014990101V1	102.3	106.9	99.8
	ID014990102V1	100.9	102.0	103.3
Average		102.8	104.1	99.2
Standard Deviation		4.4	5.1	5.2
Count (n)		12	12	12
ACL97022V	ID002084101V1	101	106	113
	ID002084102V2	99	95	86
Average		100.0	100.5	99.5
Standard Deviation		1.4	7.8	19.1
Count (n)		2	2	2
TOTALS FOR ALL BATCHES:				
	Average	102.4	103.6	99.2
	Standard Deviation	7.2	5.3	7.2
	Count	14	14	14
	3 sigma	12.7	16.0	21.5
	+ 3 sigma	115.1	119.6	120.7
	- 3 sigma	89.8	87.6	77.8

DCA = 1,2-Dichloroethane
TOL = Toluene-d8
BFB = 4-Bromofluorobenzene

Appendix E

Non-halogenated Volatile Organic Compound Back-up Data

Table E-1. Analytical Chemistry Laboratory NH VOC quality control MS/MSD and LCS by compound.

		MS (60-150%)			LCS (80-120%)	
Compound	Batch No	MS %Recovery	MSD %Recovery	RPD	LCS %Recovery	LCS-2 %Recovery
Acetone	ACL97021N	100.307	99.419	0.888	98.39	
	ACL97022N	96.074	98.428	2.421	103.98	
	ACL99004N	96.840	94.989	1.929	91.33	
Average		97.7		1.7	97.9	
Standard Deviation		2.0		0.8	6.3	
Count (n)		6		3	3	
Butanol	ACL97021N	103.959	103.906	0.052	101.53	
	ACL97022N	99.204	102.982	3.737	103.54	
	ACL99004N	102.432	100.904	1.502	97.17	
Average		102.2		1.8	100.7	
Standard Deviation		1.9		1.9	3.3	
Count (n)		6		3	3	
Ethyl ether	ACL97021N	90.172	86.923	3.670	91.71	
	ACL97022N	**49.896**	**51.663**	3.480	99.58	
	ACL99004N	91.669	89.552	2.337	100.9	
Average		76.6		3.2	97.4	
Standard Deviation		20.1		0.7	5.0	
Count (n)		6		3	3	
Isobutanol	ACL97021N	105.097	103.674	1.3627	103.33	
	ACL97022N	103.277	105.325	1.964	103.84	
	ACL99004N	100.742	99.474	1.266	98.75	
Average		102.9		1.5	102.0	
Standard Deviation		2.4		0.4	2.8	
Count (n)		6		3	3	
Methanol	ACL97021N	**1934.652**	**1122.733**	**53.1**	99.07	
	ACL97022N	96.56	102.109	5.586	95.99	
	ACL99004N	100.707	99.909	0.795	99.68	
Average		**576.1**		19.8	98.2	
Standard Deviation		781.3		28.9	2.0	
Count (n)		6		3	3	
Methyl Ethyl Ketone	ACL97021N	101.661	99.927	1.720	99.48	
	ACL97022N	95.790	97.946	2.226	104.03	
	ACL99004N	99.933	98.459	1.487	97.69	
Average		96.8		2.5	100.4	
Standard Deviation		5.2		1.3	3.3	
Count (n)		6		3	3	
Pyridine	ACL97021N	97.933	97.896	0.038	95.89	
	ACL97022N	97.470	98.650	1.203	100.24	
	ACL99004N	94.050	93.318	0.782	91.84	
Average		96.6		0.7	96.0	
Standard Deviation		2.3		0.6	4.2	
Count (n)		6		3	3	

DIVIDER

PAGE

B-2010-0251
RECORD
CD 08/30/10

AMWTP Advanced Mixed Waste Treatment Project	AK Source Document Review Summary	Form-1068, Rev. 4 Effective: 01/08/09 Page 1 of 1

Implementing Document: MP-TRUW-8.13

1. Source Document Tracking Number: C876A	2. Revision: 0

3. Category

- ☐ Published Documentation
- ☐ Unpublished Documentation
- ☑ Correspondence
- ☐ Discrepancy

4. **Title/Description Information:** Estimation of Number of Drums for BN004 Waste Stream

Document Number: NDK-001-10
Revision:
Author: Nancy D. Kirk
Date: 7/5/2010

5. AK Element	6. Generator Or Waste Type(s)	7. Location in Source Doc.	8. AK Information Summary:
WM5	RF	all	Estimated number of BN004 waste containers and volume are being increased.
WS2	RF-004, RF-802	all	The estimated number of BN004 waste containers (RF-004 and RF-802) and volume are being increased.

9. **Document Summary:**

The estimated number of BN004 waste containers and volume reported on the Waste Stream Porfile Form for BN004 are being increased. The increase is due to the addition of Special Setup containers retrieved from the Subsurface Disposal Area (SDA) Pits 11 and 12.

10. **Source Document Data Limitations (if any):**

None.

11. AK Expert:	Nancy Kirk	Nancy Kirk	7/26/2010
	Print	Sign	Date

AMWTP
Advanced Mixed Waste Treatment Project

Bechtel BWXT Idaho, LLC

INTEROFFICE MEMORANDUM

Date: July 5, 2010

To: File

From: Nancy D. Kirk NDK
Acceptable Knowledge Expert

Subject: Estimation of Number of Drums for BN004 Waste Stream - NDK-001-10

The estimated number of BN004 waste containers and volume reported on the Waste Stream Profile Form for BN004 are being increased.

The current waste stream volume is 2,103 55-gallon containers (441 m^3) and includes the Special Setups waste identified as Item Description Code (IDC) RF-004 and RF-802 which were placed into retrievable storage after September 1970.[1] The increase is due to the addition of Special Setup containers retrieved from the Sub-surface Disposal Area (SDA) Pits 11 and 12. The retrieved waste was originally generated at Rocky Flats (RF) prior to 1973, shipped to the Idaho National Laboratory (INL), buried in the SDA Pits 11 and 12, and subsequently retrieved from the pits and placed into the Transuranic Storage Area-Retrieval Enclosure (TSA-RE). Because RF did not assign IDCs to waste until mid 1971, Advanced Mixed Waste Treatment Project (AMWTP) has assigned IDC RF-744 to the Special Setups waste retrieved from Pits 11 and 12.[2,3] The Special Setups containers (i.e., RF-744) retrieved from Pits 11 and 12 are identified based on the container prefix 744 and were generated from the same processes as IDC RF-004.[4] The use of prefix 744 for Special Setups is documented for the period of 1963 through 1986.[4,5] The number of 55-gallon containers of Special Setups estimated retrieved from Pits 11 and 12 is 165 55-gallon containers based on the RF 1970, 1971, and 1972 load lists.[6] These load lists were used to add historical IDs and data into Waste Tracking System (WTS) to be matched with retrieved container data (i.e., container markings). During identification of the waste from container markings, additional historical container IDs that are not in the load lists have been identified approximately 20% of the time; therefore, the number of containers identified on the load lists for the First and Second Stage Sludge was increased by 20% to cover these occurrences. Therefore, the number of containers to be added to BN004 is estimated to be 200 or an adjusted volume of 2,302 55-gallon drums for the waste stream.

No change will be made to the estimated percentage of TRU activity for the Special Setups waste of 70% greater than 100nCi/g and 30% less 100nCi/g.[7]

850 Energy Drive, Suite 200 • Idaho Falls, ID 83401 • (208) 557-7000

References:

1. RPT-TRUW-59, *Acceptable Knowledge Summary for Special Setups (BN004)*, Rev. 2, May 6, 2008
2. CKA-001-09, Memorandum to File, *Summary of Retrieval Acceptable Knowledge (AK) for Pad R, Cell 1 Waste*, May 21, 2009 [C618A]
3. RPT-TRUW-05, *Waste Matrix Code Manual*, Rev. 24, June 16, 2010
4. GDE-318, *SDA Targeted and Non-Targeted Waste Identification Operator Guide* [P741A]
5. RPT-TRUW-56, *Acceptable Knowledge Document for INL Stored Transuranic Waste - Rocky Flats Plant*
6. Excel Spreadsheets of Container Information from 1970, 1971, and 1972 RF Load Lists, March 24, 2009 [U215A]
7. RPT-TRUW-07, *Determination of Radioisotopic Content in TRU Waste Based on Acceptable Knowledge*, Rev. 15, February 2010

NDK/at

cc: Carolyn Abbott
Steve Carpenter
Julie Collins
Bill Erhardt
Pam Fetzer
Caralea Hinkle-Daniel
Micky Johnson
Randy Morris
Tim Venneman
AMWTP Correspondence Control

DIVIDER

PAGE

AMWTP Advanced Mixed Waste Treatment Project	**AK Source Document Review Summary**	**AMWTP Form1068** **Effective Date: 07/17/02, Rev. 1** **MP-TRUW-8.13** **Page 1 of 1**

Reference Number: **P070A**

AK Type:

- [x] **Published Documentation**
- [ ] **Unpublished Data**
- [ ] **Correspondence**
- [ ] **Discrepancy Report**

RECORD
SWALKER
10/08/2008
2005-0170

Title of Source Document (including author(s), document and revision number, date, etc.): Operational Safety Analysis (OSA). Waste Receipt and Processing No. 774.001. 1995.

Information Source: Copy obtained from Building 774 Operations.

AK # [a]	AK Information Summary
WS3 – 802,900,950, 960,970 WS4 – 802 WS5 – 802	Contains treatment process descriptions from Building 774.

Source Document Data Limitations (if any):
N/A

AK Expert:

S.M. Hailey / S M Hailey — Date: 1/7/03

Print **Sign**

[a] **Obtain from Acceptable Knowledge Documentation Checklists (AMWTP Form-1066/AMWTP Form-1067)**

OPERATIONAL SAFETY ANALYSIS (OSA)

TITLE: Waste Receipt and Processing NO.: 774.001

OPERATION

The Waste Treatment Facility in Building 774 treats all liquid process waste generated from Building 771/774 Operations. In addition, aqueous and organic waste generated from other areas of the plantsite are received in Building 774 for treatment or storage.

All treatment of waste in Building 774 is for the purpose of liquid waste disposal and does not include recovery. The various processes concentrate the chemical and radioactive contaminants into a solidified form certified for shipment to approved storage sites. The remaining liquids are disposed of by forced evaporation in Building 374.

RESPONSIBILITY

R. A. Wagner	Manager	Bldg 774 Waste Receipt and Processing
Responsible User	Position	Organization

Is responsible for this operation. It is his/her responsibility to ensure that this operation is carried out in accordance with this OSA and that all employees who perform this operation are familiar with this document.

CHANGES

No changes will be made in this OSA without coordinating the change through the H&S Area Engineer, who will determine if additional reviews and/or approvals are necessary.

CONCURRENCE

J. M. Brooks
Industrial Hygiene & Safety Administrator

4-19-95
Concurrence Date

APPROVAL AUTHORITY

R. A. Wagner, Manager, Bldg 774 Waste Receipt and Processing

R A Wagner
Approval Authority

4-19-95
Approval Date

"REVIEWED FOR CLASSIFICATION"
By: [signature] Restricted Data Support
Date: 4-19-95

BUILDING 774 PROCEDURES

WO-1100	Solid Radioactive Waste Packaging Inside The PA
WO-1101	Solid Radioactive Waste Packaging Outside The PA
WO-1102	Waste/Residue Traveler Instructions
WO-1544	207 Series Solar Pond Liquid transfer
WO-4001-A	Liquid Waste Processing "First Stage"
1-Q11-WO-1221	Drum Handling
WO-4020-B/O	Organic and Sludge Immobilization System
WO-2005	Miscellaneous Aqueous Waste Handling and Solidification
WO-2010	Tru Organic Waste Sampling and Shipping 707, 776, 777
WO-2026	Waste Receiving and Shipping
WO-2305	RCRA Organic Air Emissions Daily Inspection (RCRA Standard Operating Procedures Manual)
WO-2306	RCRA Organic Air Emissions Monthly Inspection (RCRA Standard Operating Procedure Manual)
WO-2307	RCRA Organic Air Emissions Annual Inspection (RCRA Standard Operating Procedure Manual)
WO-2008	Pu Recovery Waste Collection (WO-4007-B)
WO-4015-A	Liquid Waste Processing Reagent Preparation
WO-4017-A	Decon Shower and Process Sinks
WO-4034	Radioactive Waste Packaging Requirements
CO-1075	Tank Holdup Scanning Equipment
4-K82-774-INSP-001	Building 774 Tank System and Ancillary Equipment Inspection
4-F52-774-GU-001	Glovebox Upkeep, Building 774

1-10000-HWR	Hazardous Waste Requirements Manual
ROI	Radiological Operating Instructions
HSP	Health & Safety Practices Manual
HASP	Health and Safety Plan

I. OPERATION AND CONTROLS

All liquid process waste collected in the user's tankage is double sampled. Sample results are reviewed and approval made by Waste Receipt and Processing personnel prior to transferring of the waste.

A radiation work permit is required for entry and any evolution in the radiation controlled area.

The user's waste collection vessels are separated from the Waste Processing system by two locked valves. The locked valves are under the direct control of Waste Receipt and Processing and Nuclear Materials Control.

Secondary containment is utilized in transporting waste samples from the sampling point to the appropriate analytical laboratory.

The concentration of radioactive and/or chemical contaminants in a waste stream are used to determine its entry point into the Waste Processing system.

Nuclear Material Safety Limits are posted in the area in accordance with the Nuclear Safety Manual.

Nuclear Materials Control and Nuclear Safety approved shipping limits for fissile material concentrations in the various waste streams are listed in operating manual WO-4007, "Operating the Building 771 Plutonium Recovery Waste Collection System" and the Nuclear Material Safety Manual.

Scheduled gamma scan survey is conducted by the Waste Assay and Shipping Group for the fissile material waste receiving and process vessels located in Building 774. Vessels showing a fissile material content exceeding their posted Nuclear Material Safety Limit are scanned. N.D.A. Gamma Scan equipment is calibrated and inspected before each use.

All waste drums produced by the processes are handled through the White Drum Control procedure (WEMS #WP-1201).

In case of a spill or release, H.S.P. 21.04, "Emergency Response and Spill Control" guidelines will be utilized.

1. First Stage Processes (Operating Procedures WO-2001 and WO-2008)

   The First Stage Processes occupy Rooms 102, 202, and 203 in Building 774. Room 204 contains some of the controls and instrumentation for both the First and Second Stage Processes. Chemical reagent preparation, Rooms 241 and 342, are also used jointly by both processes.

   Aqueous wastes from the Building 771 Operations area enter the first stage of the Building 774 Waste Receipt and Processing facility via pipeline. The first stage

receiver vessels are connected to the waste generator's tankage by pipeline. All transfers are made by applying vacuum to the receiver vessels. Additional wastes may be received in 4 Liter bottles (via 55 gallon drums).

In general, each aqueous waste received at the first stage is entered into one of two processes. Each process is tailored to meet certain characteristics of a waste. Supervision determines the destination of the receiving waste stream. The waste may pass through one or more of these processes before final disposition or entry into the second stage operation. The processes involved and the wastes streams they treat are categorized as follows:

a. Batch Neutralization and Precipitation

Acid waste containing metal ions that are insoluble in basic solutions and basic waste requiring two stages of decontamination are received in Tanks 4-R or 4-L.

Acid waste requires a neutralization and precipitation step before further-processing. Acid Wastes received into tank 4-L or 4-R are neutralized by adding sodium hydroxide to establish the basic ph (11) that is required for the precipitation process to occur.

The appropriate amount of ferric sulfate, calcium chloride, magnesium sulfate, and flocculating reagents are mixed into the waste. The solution is allowed to sit idle until the decontaminating solids formed (mainly ferric hydroxide) settle to the bottom of the tank. An adjustable dip tube is then used to decant the solid-free liquid into Tank I-A, the receiver tank for the next precipitation process. The solids remaining in the bottom of the tank are transferred to Slurry Holding Tank 40.

Waste Solutions requiring one stage of decontamination are vacuum transferred to tanks 1-A or 1-RF for receiving. Tanks 1-A or 1-RF are then pump transferred to the second stage for decontamination.

Wastes for batch precipitation are also received in tank 4-L or 4-R, via bottles in 55 gallon drums These bottles are bagged into GB17 where they will be vacuum transferred into Tanks 4-L or 4-R. The empty bottles will be discarded or recycled as appropriate.

2. Miscellaneous Aqueous Waste Handling and Solidification Process (Operating Procedure WO-2005)

Aqueous waste containing complexing agents known to be detrimental to the radioactive decontamination process and aqueous waste containing certain radioactive isotopes or hazardous chemicals that are undesirable in the regular waste system are entered into the solidification process. These wastes are received as package shipments.

Specially prepared waste shipping drums, including a rigid liner, containing a mixture of Portland cement and an absorbent material, are attached by O-ring drum liner to the

Solidification Glovebox #4. All waste must be basic before placement in the drums.

Packaged waste received in plastic bottles are entered through a bagin port into the glovebox. The bottles containing acid waste are transferred by vacuum into Tank T-7, the receiver and neutralizer tank adjacent to the glovebox. After sodium hydroxide is added to Tank T-7, pH paper is used to check to ensure acid wastes are neutralized by using drain hose in glovebox. The neutralized waste is then drained by gravity back to the glovebox; a connecting hose directs the waste into the prepared drum liner and drum. A maximum of 80 liters of basic waste solution can be added to the prepared drum. The cement chemically reacts with the waste solution to form a solid.

Basic bottled waste is entered into the glovebox and then poured directly into the prepared drum. The empty bottles are discarded into a shipping drum also attached to the glovebox, or recycled as appropriate.

The filled shipping drums are separated from the glovebox by the standard bag cut procedure. The drums are closed, weighed, labeled, logged, surveyed for alpha contamination, and gamma and neutron radiation, by a Radiation Control Technicians, before being transferred to the Waste Assay & Shipping department or approved storage.

3. Second Stage Processes (Operating Procedures WO-4017-A and WO-2026)

The Second Stage Processes occupy Rooms 103, 203, and 241, of Building 774.

The Second Stage Process includes a batch precipitation system which is used to remove radioactive materials from waste containing both radioactive and chemical contaminants in excess of the limit for transfers to Building 374. The process utilizes the ferric hydroxide carrier precipitation method of decontamination.

a. Batch Precipitation Process (Liquid Waste Processing - Second Stage - WO-2026)

Any aqueous waste entering the second stage may be treated through this radioactive decontamination process, though it is primarily used for the chemically contaminated waste.

The treated effluent from the First Stage processes, liquids from the Building 771-C (Annex Foundation Sump), 774 process drains, Tanks 309 East and 309 West (Building 771, Room 309) and Building 774 foundation sumps are received and processed in Tanks 201. This tank and the reagent tanks used in the process are located in Room 241.

When the receiving tank becomes filled with the various wastes, the tank contents are neutralized and transferred to Tank 203 for treatment. The tank is placed in a mixing mode. The appropriate amounts of ferric sulfate, calcium chloride and magnesium sulfate reagents are added and allowed to become intimately mixed with the waste solution. A flocculating agent is added near the end of the mixing cycle to increase the floc particle size. The mixing cycle is then ended and the treated waste

is allowed to rest until the produced floc precipitates to the tank floor. A rotary dip tube on the face of the tank is then adjusted to decant the clear supernatant into the treated waste Holding Tank 204. The treated waste is sampled and the resulting analytical lab data is used to determine its disposition. If the waste meets the on-site transfer limits for radioactivity, it is transferred to Building 374, otherwise it is reprocessed. The slurry remaining in the bottom of the batch tank is washed into Slurry Holding Tank 40. Depending on incoming waste radioactivity levels, treatment steps may be bypassed and waste transferred to Building 374, per supervisory guidance.

4. Organic Waste Solidification Process (Operating Procedures WO-4020 and, WO-2010)

The Organic Waste Solidification Process occupies part of Room 210, the process area, and all of Room 212, a shed housing the absorbent powder storage and feed bin area.

Organic wastes are comprised of a variety of oils and solvents. Most of the oils are from spent lathe coolant used in the Pu machining area and lubricating oils used in machines throughout the plant. Most of the solvents can be described as chlorinated and/or fluorinated hydrocarbons, such as carbon tetrachloride, trichloroethane, and freon, used mainly for cleaning and degreasing.

Some of these wastes are delivered to Building 774 as packaged waste shipments from various sources around the plant, though the bulk of the waste is transported through a double containment pipeline connecting Buildings 707, 776, and 777 to Building 774. Prior to pipeline shipment, the waste is sampled and the sample is submitted to the laboratory for radioactive material analysis. The resulting sample data is reviewed and documented by Waste Processing personnel to assure that the waste is within the approved discard limit and Nuclear Material Safety Limit. The receiver tank is checked to insure that it has adequate holding capacity for the shipment. The generator is then notified of the shipping schedule.

Waste shipments can be received into Tanks T-13 or T-14 located in Room 210. The pipeline is valved to the selected receiver tank, the transfer valve unlocked and the shipment received.

The solidification process involves blending the organic waste liquid with water, emulsifier, Envirostone, and accelerator to form a solid monolith. The actual blending takes place in the waste drum using a lightening mixer. Both the liquid and the Envirostone are transferred by pipeline to the drum which is attached to the glovebox by O-ring bag. Respiratory protection, protective clothing, gloves and Radiation Control Technician coverage are all utilized during this operation. Respiratory protection is also worn when loading the Envirostone into the transfer hopper per procedure WO-4020.

The filled shipping drums are separated from the process glovebox by the standard bag cut procedure. The drums are closed, weighed, labeled, logged, surveyed for alpha contamination, and gamma and neutron radiation, by a Radiation Control Technician,

before being transferred to the Waste Assay & Shipping department. Emptied packaged waste drums are surveyed and returned to the originator for reuse.

All packaged waste deliveries are controlled by use of the Waste Processing Request Form. Bottles of organic waste liquid are received, documented, and introduced into the organic solidification process through the filter glovebox. The emptied bottles are removed from the glovebox by the standard bag cut procedure and drummed as contaminated combustible waste.

Currently the system is non-operational excluding storage.

5. Building and Equipment Decontamination

Radioactively-contaminated spills and leaks from equipment are cleaned up immediately and are repaired to prevent further leakage. In cases of high activity, a HEPA filtered exhaust vacuum cleaner is used to pick up the spill and minimize the spread of contamination. The contaminated area is then scrubbed with detergents or other cleansing agents and water. The spent cleansing agents are entered into the waste processing system through the building inspectable floor drain system.

Chemical or low radioactive spills may be washed directly into the floor drain system per Criticality Engineering.

Cleansing solutions are made up of detergent and water or a commercial cleaner and water. Some dilute acids or bases may used in equipment decontamination. Personal protective equipment is used when handling these solutions, per Radiological Operating Instructions (ROI) 11.1, "Radiation Work Permits".

Any solid waste generated during the cleanup, such as paper, wipe towels, etc., are prepared and shipped as contaminated mixed waste (WO-4034, WO-1100).

All of the Building 774 floor drain system is inspectable. A routine documented daily inspection is made of the floor drain sumps to insure the integrity of the primary containment. Floor drains/sumps are inspected by Operations on a daily basis, per Hazardous Waste Requirements Manual (1-10000-HWR).

6. Chemical Reagent Preparation (Operating Procedure WO-4015-A)

Chemical reagents required in both the First and Second Stage Precipitation processes are prepared in tanks located in the Chemical Reagent Preparation Room, 342. The dry chemicals are received and stored in the Chemical Storage Shed, Room 322. The bagged chemicals are transported from the storage shed to the preparation room by hand truck. Each reagent tank is identified by sign as to its content. The proper amount of each specific chemical and the volume of water required for the preparation are shown in operating procedure manual WO-4015, "Reagent Preparation". Agitators are located on each tank to provide mixing during the preparation. The specific reagents prepared are:

ferric sulfate, magnesium sulfate, calcium chloride, and a coagulating agent.

7. Low Level Liquid Organic Waste System (Operating Procedure WO-4047)

Organic and solvent waste containing low level radioactive contaminants is stored in Building 774. This organic waste is stored until it can be transported for waste disposal. Tanks 102 and 103 are currently blanked off and lockout/tagout pending disposition of approximately 20,000 gallons of low level waste.

8. Risks and Control Measures

Risks	Control Measures
Fire	Sprinkler system, CO_2 extinguisher, fire call boxes, Building intercom system and 2-way radios.
Criticality	Waste sample data is reviewed and transfer is controlled by Liquid Waste Treatment personnel. Waste Treatment controls the two, transfer line locked valves. Monthly gamma survey of process tankage is taken to ensure against fissile material buildup. Neutron alarm system warns personnel of a possible criticality accident. Bottle Wastes entering GB 4 and GB 17 are scanned for Fissile Material content prior to bag-in
Dust from Handling Processing Materials	Full-face respirator with HEPA cartridges used when handling containers of dusty materials.
Drum, Box, and Materials Handling	Gloves, hand trucks, dollies, forktruck hoists, and pallet trucks are used to move heavy or awkward items.
Machinery Hazards	Electrical equipment is grounded, hazardous moving parts on mechanical equipment are guarded. HSP lockout procedures are used during repair of equipment.

Risks	Control Measures
Environmental Contamination	The process areas are equipped with: inspectable floor drain systems, filtered ventilation exhaust sampled at point of discharge, and personnel entrance air locks. Floor drain system is equipped with leak detection equipment. Rocky Flats Plant has a zero release policy for all process wastes. All process or laboratory buildings have segregated systems separating the process from the Environment.
Toxic Liquids and Vapors	Most of the waste processing operations are carried out in closed systems. Personnel are equipped with respiratory, eye, body, and hand protection to meet the needs when cleaning up spills, leaks, or handling toxic materials outside the closed systems Industrial Hygiene and Industrial Safety will sample and provide guidance for P.P.E, as required. All process areas are equipped with safety and eye showers. Gloveboxes housing pumps and processing equipment are routinely inspected in accordance with regulations set forth by the glovebox quality and glove control program. Equipment is also inspected daily per Hazardous Waste Requirements Manual. All Gloveboxes housing pumps have a hi-level alarm.
Building Radioactive Contamination	The building has Radiological Operations coverage on all shifts. Locker room, lunch room, office, and process areas are

	surveyed for alpha contamination control. An alpha survey of gloveboxes and process equipment is taken monthly. A gamma-neutron survey of the gloveboxes is also taken monthly. The building air is continuously monitored by 23 standard air samples and 10 SAAM devices.
Risks	Control Measures
Fork Truck Operation	Fork truck operators receive training and certification as required by the Training Department. Monthly PMO to prevent equipment failure. Operation safety check by operator before use.
Hoist Use	Visual safety inspection by operators before use. Monthly PMO to prevent equipment failure. Yearly certification.
Process Tanks	All process tanks in Building 774 are ultra-scanned annually to determine wall thickness. A gamma scan of all tanks are conducted monthly.
Movement of Liquid Hazardous Materials	Movement of liquid hazardous materials, i.e., acids, bases, CCl_4, Trichloroethylene, etc., is accomplished according to the requirements of HSP 9.10 and 13.03 (Carcinogen Control).
Opening Pressurized Drums	All 55-gallon drums with a lid shall be opened, within a C-cell or approved area, using a drum restraining device unless the lid has a pressure equalizing valve.

DIVIDER

PAGE

AMWTP Advanced Mixed Waste Treatment Project	**AK Source Document Review Summary**	**AMWTP Form1068** **Effective Date: 07/17/02, Rev. 1** **MP-TRUW-8.13** **Page 1 of 1**

Reference Number: **P077A**

AK Type:

- [x] **Published Documentation**
- [ ] **Unpublished Data**
- [ ] **Correspondence**
- [ ] **Discrepancy Report**

2005-0170
Record
PB 12-1-03

Title of Source Document (including author(s), document and revision number, date, etc.): Waste Stream Residue Identification and Characterization Building 774. 774-V3.2. 1992.

Information Source: Prepared by WASTREN, Inc., for EG&G Rocky Flats, Inc. Copy obtained from RMRS microfilm records.

AK #[a]	AK Information Summary
WM3	Process description, flow diagrams, and descriptions for process outputs generated in Building 774.

Source Document Data Limitations (if any):
N/A

AK Expert:

S.M. Hailey (Print) S.M. Hailey (Sign) Date: 1/7/03

[a] **Obtain from Acceptable Knowledge Documentation Checklists (AMWTP Form-1066/AMWTP Form-1067)**

Technical Services to Assist in Mixed
Radioactive/Hazardous and Geotechnical Waste
Management Services for the Department of Energy
at the Rocky Flats Plant

WASTE STREAM AND RESIDUE IDENTIFICATION AND CHARACTERIZATION

BUILDING 774

Version 3.2
November 1991

Prepared for:

EG&G
Rocky Flats Plant
Golden, Colorado

Prepared by:

WASTREN, Inc.
12000 N. Pecos, Suite 250
Westminster, Colorado

RECEIVED
APR 15 1992
REVIEWED FOR CLASSIFICATION/UCNI
BY RBL
DATE 04/14/92

P077

EXECUTIVE SUMMARY

Building 774 is the high-level aqueous waste treatment facility at the Rocky Flats Plant. Highly radioactive acid wastes, caustic or aqueous wastes, waste oils, and nonradioactive waste photographic solutions are transferred here from Buildings 111, 122, 130, 371, T371-J, 441, 444, 460, 551, 559, 664, 707, 750, 771, 774, 776, 777, 881, and 991. Wastes received from these locations are either piped directly into Building 774 or transferred in drums, containers, or other types of packaging. Four of the seven processes in Building 774, specifically neutralization, liquid waste treatment - first and second stages and precipitation/filtration utilize a series of interconnected tanks to treat acidic, caustic, and otherwise radioactive wastes, and separate relatively low-level effluent from contaminated solids or sludges. The Organic and Sludge Immobilization System (OASIS) the fifth process accepts waste oils from any building at the Rocky Flats Plant that contains transuranic material, and solidifies the liquid waste. A silver recovery process involves the flow of waste photographic solution through the silver recovery units where silver is plated onto an electrically charged metal plate and recovered. The seventh process, maintenance is a provision of support operations for all tanks, pumps, gloveboxes, and related pipes in Building 774, along with support for stripout operations. The processes use magnesium cement, sodium hydroxide, ferric sulfate, magnesium sulfate, calcium chloride, a diatomite mixture, emulsifiers, accelerators, Portland Cement, Envirostone Cement, and Borax in treatment reactions, but these are all consumed in the processes.

Wastes generated in Building 774 include liquid waste, waste sludge, solidified waste sludge and waste oils, along with filters, metals, plastic and combustibles. Silver ingots are produced as a recoverable product from the waste photographic solution and are stored in a safe in 774 Building. Low-level aqueous wastes are piped to tanks in Building 374. Waste oils, generated from equipment and maintenance in Building 774, are stored in Room 241 until they can be batch processed into a solid form. Drybox gloves, filters, light metals and line-generated combustibles are collected in drums in Room 203. Non-line combustibles including Kimwipes, Texwipes and surgical gloves are packaged into 55 gallon drums and stored in Room 241. The drums of solid waste and solidified sludges are stored in Room 241 until shipped to Building 771 Annex or Building 371 for drum counting. The drums are then sent to the Real Time Radiography (RTR) unit for waste form certification. From RTR, the drums are transferred to a drum storage area or sent to Building 664 to be sent to a disposal site. Used high energy particulate air (HEPA) filters are placed in shipping containers in Rooms 341 and 441, then sent to the Drum Counter or Crate Counter for counting and then are sent to the Size Reduction Facility (SRF), Building 776, to be size reduced and packaged for disposal. Spent batteries are sent to Building 081 (PU&D).

3.0 PROCESS 774-03: LIQUID WASTE - SECOND STAGE

The Caustic Liquid Waste - second stage process, completes treatment of basic aqueous waste initiated in Liquid Waste - First Stage and also treats wastes from Building 771 Tanks 309 East and West and Building generated wastes including ground water from the Room 103 sump. Batch precipitation tanks are used in the Stage 2 process.

The waste is received from Tank C-1 (clarifier) a part of the first stage process, then transferred to either Tank 201 or Tank 202 (at A, Figure 3.1). Waste is also received from Tanks 309E and 309W in the Building 771 annex. These are low-level tanks which receive waste from the decon showers, process sinks, and cooling tower water. The liquid waste is sampled at Tanks 309E and 309W before it is shipped to T201 or T202 to be sampled for total plutonium and americium. Tanks 201 and 202 receive return liquid from Tank 203 and 204 (at B, Figure 3.1) that did not meet the requirements for shipment to Building 374. Other miscellaneous inputs to Tanks 201 and 202 include ground water from the sump in Room 103, seal water, and building-generated solutions.

Once the basic liquid waste has been transferred to either Tanks 201 or 202, reagents including magnesium sulfate, ferric sulfate, calcium chloride, and Purifloc flocculant are added to the tanks. After circulation, the tanks are allowed to settle for eight hours to allow the precipitate to fall to the bottom. The liquid is decanted off to Tanks 203 or 204 (at B, Figure 3.1). The sludges at the bottom of Tanks 201 and 202 are drained and sent to Tank 40 for further treatment. Once the decanted liquid has been transferred to Tanks 203 and 204, a sample of the liquid is taken. If the sample has less than 10^5 pCi/liter total alpha activity, the liquid is shipped to Tank D875 in Building 374. If the sample has greater than 10^5 pCi/liter total alpha activity, the liquid is treated a second time in Tank 203 or Tank 204 by batch precipitation. Nonline inputs including Kimwipes/Texwipes, surgical gloves, leaded glovebox gloves, rags, and towels are used for general room cleanup and materials handling. Line inputs including Texwipes, vacuum pump oil, valves, pumps and lines, glovebox gloves, HEPA filters, and Oil Dry are used for system maintenance, cleanup, and air filtering.

The sludge remaining at the bottom of Tanks 203 and 204 is sent to Tank 40 (precipitation and filtration process) for further treatment. The second stage of the liquid waste treatment process generates much of the same waste as first stage. Leaded glovebox gloves, line generated light metals, and wet combustibles including cloth towels and Oil Dry are placed in 55-gallon drums in Room 203. Nonline dry combustibles including Kimwipes, Texwipes, surgical gloves, towels, paper coveralls, and paper are all placed in 55-gallon drums located in Room 203. Plenum prefilters, absolute glovebox filters and line dry combustibles including rags, tape, plastic jugs, and dried caustic liquid generated during maintenance are also placed in 55-gallon drums in Room 203. Drums of wet combustibles are only made up as needed when spills are cleaned up. During maintenance or stripout operations, several drums or crates of light metal and dry combustibles may be generated. An attempt is made to keep as much material out of the process area as possible. Nonline dry combustibles that include new reagent bags and cement bags that have never been in the process areas are sent to the dumpster outside Building 774. Any vacuum pump oil that is generated is placed in one-gallon jugs and taken to the OASIS Process. Process Table 774-3 presents the outputs associated with Caustic Liquid Waste Process - second stage, and provides their dispositions and hazardous waste character.

Two additional tanks are to be added to the system between Tanks 201/202 and 203/204. These will be Tanks 67 and 68. The tanks will be above ground, located on the exterior east side of Building 774. The tanks currently at that location are partially below ground and have not been used for some time. The new tanks will be used as holding tanks for liquids containing high concentrations of nitrates. If a sample taken for either Tank 203 or Tank 204 indicates the liquid has a high nitrate concentration, the liquid will be sent to Tank 67 or Tank 68 until Building 374 has the capability to accept the liquid. Another planned modification is the addition of a supernate polishing filter adjacent to Tanks 203/204. This filter will have the same function as the polishing filter in Building 374. The supernate from Tanks 203/204 may be sent to the filter to remove additional particles before being sent to Building 374. This filter is expected to be installed in approximately two years.

Process Table 774-3 gives the outputs associated with the Liquid Waste - Second Stage and defines their destinations and hazardous character.

4.0 PROCESS 774-04: PRECIPITATION/FILTRATION

The Precipitation/Filtration Process treats aqueous waste in two stages, removing radioactive contaminants from the waste and solidifying the material as transuranic mixed waste. Building 774 receives transuranic aqueous wastes from production facilities in Building 771. The precipitation process uses various holding tanks, pumps, controllers, valves, heat exchangers, evaporators, and numerous filters.

Transfer tanks accumulate the aqueous waste in Building 771. These tanks are sampled for plutonium and americium. If the measured levels are below the economic discard limit (EDL) and the nuclear material safety limit (NMSL), the tank contents are transferred into the Building 774 treatment processes.

Sludge from Tank C-1 in Caustic Liquid Waste - First stage is pumped to Tank T-9 (at A Figure 4.1). Silver recovery effluent and sludge from various tanks in Caustic Liquid Waste Process - Second stage are pumped to Tank 40 (at B, Figure 4.1). The waste from Tank 40 and Tanks 4L, 4R, and 12 in the Neutralization Process are pumped to Tank 210A (at C, Figure 4.1). Sludge from Tanks T-9 and 210A feed the vacuum filter (at D, Figure 4.1). The combined solids stream from these tanks is then sent to a precoated rotary drum vacuum filter which separates out the solids. The resultant wet sludge is solidified with cement and a small amount of filtrate in the rotary drum vacuum filter glovebox.

The slurry waste stream is pulled through the filter pad by a vacuum inside the rotating filter drum. A thin layer of filter pad plus solid contaminants from the slurry is continuously scraped off the outside of the filter. The sludge is collected in a 55-gallon drum which contains a rigid polyethylene liner and an inner PVC liner. A Portland cement/diatomite mixture is added to the drum along with the sludge as it drops into the drum. The cement/diatomite is added to the glovebox via a hopper and screw feeder mounted on the outside of the glovebox. The filtrate is recycled back into the first stage precipitation process described in Liquid Waste Process - First stage. Gloves, Oil Dry, Kimwipes, towels, and paper coveralls are used for general room cleanup and materials handling. Oil, HEPA filters, valves, pumps, and lines are used for system maintenance.

The resultant solidified sludge is placed in 55-gallon drums and handled as a transuranic mixed waste; these drums are then taken to Room 241. Excess filtrate separated from the solids in the vacuum filter is piped to Tanks 1RF or 1A, to be handled as part of Process 2, Caustic Liquid Waste - First stage. Exhaust air is passed to the building filter plenum system and then to the atmosphere. Line-dry combustibles, line-wet combustibles, glovebox gloves, line-light metal, plenum pre-filters, and glovebox filters are taken to Room 203 and put in the appropriate 55-gallon drums. Waste oil is placed in one-gallon plastic jugs, and nonline dry combustibles are placed in 55-gallon drums and sent to the storage unit in Room 241. Process Table 774-4 presents the outputs associated with the Precipitation/Filtration process, and provides their dispositions and hazardous character.

5.0 PROCESS 774-05: OASIS

The Organic and Sludge Immobilization System (OASIS) Process accepts waste oils from any building at the RFP that contain transuranic material, and combines the waste with emulsifier, Envirostone, and accelerator to solidify the mixture for transport in drums. Most of the waste oil comes from Buildings 707, 776, and 777. The OASIS process uses various holding tanks, pumps, controllers, valves, and mixers.

Waste oil being transferred from Buildings 707, 776, and 777 is stored in Tanks T-13 and T-14 (at A, Figure 5.1). A third tank, T-374A, has been used in the past to store feed to this system, but it has been tagged out, and there are no plans to use it in the future. From the tanks, the waste oil is pumped to the OASIS glovebox mixer (at B, Figure 5.1). The pump is enclosed in a small glovebox. Oil, water, emulsifier, Envirostone, and accelerator (to speed up the setting process) are mixed in a 55-gallon drum attached to the bottom of the glovebox. After the mixture has set, the drum is moved to Room 241 for storage. Surgical gloves, Kimwipes, tape, plastic, and paper are used for general room cleanup and materials handling.

After a sufficient number of drums have accumulated in Room 241, (including waste drums not associated with the OASIS process), the waste is shipped to the 771 Annex or to Building 371 for counting. Glovebox exhaust is discharged to the main HEPA filter plenum in Room 341, and then to the atmosphere. In addition to the solidified waste oil, outputs from the OASIS process include leaded gloves, contaminated coveralls, glovebox filters, metal, glass, glovebox filters, and line-generated combustibles such as surgical gloves, paper, Kimwipes, plastic, and tape. These wastes are put in the appropriate 55-gallon drums in Room 203, then sent to Building 371 or 771 for counting. Nonline-generated combustibles such as tape, plastic, Kimwipes, paper, and surgical gloves are generated throughout the building, collected in a 55-gallon drum and placed in Room 241. Sanitary trash (packaging waste) is placed in a dumpster adjacent to the powder shed. Process Table 774-5 presents the outputs associated with OASIS and provides their dispositions and hazardous character.

Technical Services to Assist in Mixed
Radioactive/Hazardous and Geotechnical Waste
Management Services for the Department of Energy
at the Rocky Flats Plant

WASTE STREAM AND RESIDUE IDENTIFICATION AND CHARACTERIZATION

BUILDING 774

Version 3.2

Prepared for:

EG&G
Rocky Flats Plant
Golden, Colorado

Prepared by:

WASTREN, Inc.
12000 N. Pecos, Suite 250
Westminster, Colorado

RECEIVED
SEP - 3 1992
REVIEWED FOR CLASSIFICATION/UCNI
BY
DATE 8/31/92

CO77

The Overview Document contains information on the various methods of data acquisition used during the program and lists the terms, acronyms, and abbreviations used in this report. All the building reports will use the same format and organization. Each will contain an introductory section, a number of process description sections, and appendices for supporting material.

Each book begins with an Executive Summary. It briefly describes the building's processes, waste streams, residues, and waste stream destinations.

Section 0.0 contains a brief program overview, document organization, introductory material on the specific building covered in the report, and the numbering system used to differentiate processes, waste streams, and waste management units (WMUs).

The remaining sections contain descriptions of the processes occurring within the building. Each section contains all the information exclusive to a given process. The process is described using a standardized presentation of narrative discussion, a flow diagram, a table presenting the process outputs, and a form describing each of the process outputs in further detail.

Appendix A contains one-page descriptions of the WMUs located in the building, the waste streams stored in the building, and the subsequent waste stream destinations.

0.3 Overview of Building

Building 774 is a liquid waste treatment facility that receives highly radioactive acid wastes, caustic wastes, waste oils and nonradioactive photographic solutions from Buildings 111, 122, 130, 371, T371-J, 441, 444, 460, 551, 559, 664, 707, 750, 771, 774, 776, 777, 881, and 991. The facility contains seven processes; neutralization, liquid waste treatment - first and second stages, precipitation, OASIS, silver recovery, and maintenance. All processes in Building 774, with the exception of maintenance and silver recovery, are interrelated in that they use a series of tanks and pumps connected by pipes to treat acidic, caustic, and other radioactive wastes, and separate relatively low-level effluent from contaminated solids or sludges. The neutralization process mixes highly radioactive acid waste generated during plutonium reprocessing with sodium hydroxide. The liquid waste treatment process - stages 1 and 2, treats basic liquid waste transferred from Building 771 to Building 774 for treatment. The precipitation process treats aqueous waste in a two-stage process during which radioactive contaminants are removed from waste and solidified as TRU-mixed wastes. The aqueous wastes are transferred from plutonium reprocessing operations in Building 771. The OASIS process accepts waste oils containing transuranic material from any building and combines these liquid wastes with solidifying agents. The silver recovery process passes waste photographic solution through a silver recovery unit to recover the silver and form it into ingots. The last process, maintenance, provides support operations related to all tanks, pumps, gloveboxes, and related pipes in Building 774, along with support for stripout operations that remove or replace existing equipment. All processes, with the exception of maintenance, use chemicals or materials which are consumed.

Wastes generated in Building 774 include liquid waste, waste sludge, solidified waste sludge and waste oils, along with filters, metals, plastic and combustibles. Silver ingots are produced as a recoverable product from the waste photographic solution and are stored in a safe in Building 774. Low-level aqueous wastes are piped to tanks in Building 374. Waste oils, generated from

equipment and maintenance in Building 774, are stored in Room 241 until they can be batch processed into a solid form. Drybox gloves, filters, light metals and line-generated combustibles are collected in drums in Room 203. Non-line combustibles including Kimwipes, Texwipes and surgical gloves are collected in 55-gallon drums located in Room 203, then packaged into 55-gallon drums and stored in Room 241. The drums of solid waste and solidified sludges are sampled and stored in Room 220 or 241. The drums are then sent to the Real Time Radiography (RTR) unit for waste form certification. From RTR, the drums are transferred to a drum storage area or sent to Building 664 and held prior to being sent to a disposal site. Used high efficiency particulate air (HEPA) filters are placed in shipping coffins in Rooms 341 and 441 and sent to B Dock. The coffins are then sent to the drum counter or crate counter for counting and to the Size Reduction Facility (SRF), Building 776, for size reduction and packaging prior to disposal. Spent batteries are sent to Building 061 (U&D).

0.4 List of Processes in Building

774-01, Neutralization
774-02, Basic Liquid Waste - Stage 1
774-03, Basic Liquid Waste - Stage 2
774-04, Precipitation/Filtration
774-05, Oasis
774-06, Silver Recovery
774-07, Maintenance
774-08, General Waste
774-09, Miscellaneous Waste Handling

0.5 Numbering Systems

EG&G and its subcontractors have devised three numbering systems to uniquely identify each process, waste stream, and WMU at RFP. The process numbering system is described in Section 0.5.1; the waste stream numbering system is described in Section 0.5.2; the WMU numbering system is described in Section 0.5.3.

0.5.1 Process/Output Numbering System

Each process that occurs or has occurred at RFP has been assigned a unique number that consists of the building number, a number assigned to a given process within the building, and an output number. The following is an example of a process/output number:

111-01-05

The first field, "111," identifies the building, and the second field, "01," is the number assigned to a specific process within Building 111. If an additional process were housed in Building 111, it would be given the number "111-02." In this manner, all processes at RFP have a distinct label. The third field, "05", is the output number. This is a sequential number given to each waste stream within a process. In cases where waste streams within the same building and process have identical IDC and CCC codes (see Section 0.5.2), the output number will uniquely identify each.

2.0 PROCESS 774-02: BASIC LIQUID WASTE TREATMENT - FIRST STAGE

The Liquid Waste treatment, first stage precipitation process, treats basic aqueous waste from plutonium reprocessing operations to reduce radionuclide levels in the waste. The resulting sludge and supernate can then be treated in other processes. The treatment process is divided into two stages. Stage 1 accepts caustic waste directly from Building 771, acidic waste that has already been neutralized with sodium hydroxide in the Neutralization Process (Process 1), and filtrate from the Precipitation Filtration Process (Process 4). The second stage accepts waste from the first stage. Equipment used in the first stage precipitation process includes holding tanks, mixing tanks, clarifier tank and Floc 5 for precipitation. Figure 2.1 shows the inputs, process flow, and outputs associated with the First Stage of the Liquid Waste Treatment Process.

The basic waste is collected in Building 771 in Tanks 714, 921, 923, and 927. Tank 714 is a shipping tank for basic scrubbing solutions from the Hydrofluorinator Process within Building 771. Tank 921 collects basic solution from the fume scrubber for the process gloveboxes in Room 149. Tanks 923 and 927 collect process cooling water. Tanks 80, 81, and 82 collect liquid waste from research and development (R & D) operations in Building 771. The waste may be either basic or acidic. If the waste is basic, it may then be treated in first stage precipitation process of the Liquid Waste Process.

All of the above tanks are sampled twice prior to shipment of liquid to Building 774. The samples must be below the economic discard limit (EDL) and the nuclear material safety limit. In addition to a plutonium and americium analysis, all tanks are sampled for uranium. Once both samples are within appropriate limits, the basic waste is transferred to either Tank 1A or Tank 1RF in Building 774 (at A, Figure 2.1) depending on which tank is available. When the accumulated waste has been transferred to Building 774, the transfer valves are shut and the waste is transferred to the Flash Mixer, Tank 70 (at B, Figure 2.1). Reagents, including ferric sulfate, magnesium sulfate, and calcium chloride are added to the solution in Tank 70 which is mechanically agitated. After the reagents are mixed in, the solution is transferred to the flocculator, Tank 5, where Purifloc flocculant is added to precipitate the solution (at C, Figure 2.1). The solution is then transferred to the clarifier, Tank C-1 (at D, Figure 2.1). This tank acts as a quiet pool to settle the precipitates. The sludge drops out of the bottom of Tank C-1 and is transferred to Tank T-9. The supernate is recycled back to Tank 1A to repeat the precipitation process at Tank C-1; reagents and Purifloc are added a second time.

Other inputs to first stage precipitation are recirculated liquid from room drains and return solution from Tanks 73, 359A, or 4R. These solutions are neutralized acids or liquid filtered from the sludges collected throughout the process. They are input to either Tank 1A or 1RF and are treated as described above. Gloves, towels, and paper coveralls are used for general room cleanup and materials handling. Caustic gases are vented to the plenum and HEPA filters are used to purify process area exhaust. Oil, valves, pumps, and lines are used for system maintenance.

After the basic supernate has been passed through the precipitation process twice, the liquid is sent to Tanks 201 or 202, where the second stage is initiated. The sludge or precipitate that is produced when the first stage is complete is temporarily stored in Tank T-9, then cemented and drummed in the Filtration Process. Plenum prefilters, absolute glovebox filters, leaded glovebox

9.0 PROCESS 774-09: MISCELLANEOUS WASTE HANDLING

The treatment of aqueous waste is carried out during the Miscellaneous Waste Handling process. Waste is primarily generated through processes in Buildings 559, 771, and 371. Aqueous waste containing complexing agents detrimental to the radioactive decontamination process and containing certain radioactive isotopes or hazardous chemicals undesirable in the regular waste system are entered into the solidification process. The bulk of these wastes are received as package shipments, though some are received by pipeline transfer from the Building 771 Recovery Operations into Tank T-7. Figure 9.1 shows the inputs, process flow, and outputs associated with the Miscellaneous Waste Handling Process.

Specially prepared waste shipping drums, containing a mixture of Portland cement and an absorbent material, are attached by O-ring drum liner to the solidification glovebox, No. 4. All waste must be basic before placement in the drums.

Packaged waste received in plastic bottles is entered through an airlock into the glovebox. The bottles containing acid waste are emptied by vacuum into receiver and neutralizer Tank T-7, adjacent to the glovebox. A pH indicator solution is added to the waste, then a sodium hydroxide reagent is added until the color indicator shows the contents of the tank to be basic. The neutralized waste is drained by gravity back into the glovebox. There, a connecting hose directs the waste into the prepared drum. A maximum of 25 gallons of basic waste solution can be added to the prepared drum. The absorbent material in the drum carries the waste solution through the Portland cement. The cement chemically reacts with the waste solution to form a solid.

Basic bottled waste enters the glovebox and is poured directly into the prepared drum. The empty bottles are discarded into a shipping drum attached to the glovebox. Highly concentrated chloride waste is received from Building 771 Recovery Operations by pipeline into Tank 7, neutralized (as described earlier) and drained into the prepared drum(s).

The filled shipping drums are separated from the glovebox by the standard bag cut procedure. The 55-gallon sludge drums containing cemented solids from the Unit 57 glovebox are taken to Rooms 241 or 220, then to the RTR unit to determine if there are any free liquids present. These drums will be disposed as Transuranic-mixed waste. Glovebox HEPA filters are placed in the appropriate 55-gallon drum in Room 203. Plastic bottles are also placed in a 55-gallon drum in Room 203. Glovebox gloves are placed in a satellite collection area. Glovebox exhaust is vented through the building filter plenum. Process Table 774-9 presents the outputs associated with the Miscellaneous Waste Handling Process and provides their dispositions and hazardous character.

gloves, and waste light metals including pumps, valves, lines, and tanks generated during maintenance are taken to the appropriate 55-gallon drum in Room 203. Nonline dry combustibles including Kimwipes, surgical gloves, towels, and paper, line-wet combustibles (cloth towels), and line-generated dry combustibles including rags, tape, and dried caustic liquid are drummed and stored in Room 241. Plastic waste, consisting of booties, gloves, and supplied air suits, is collected in the appropriate satellite collection area. Nonline-generated dry combustibles including new reagent bags and cement bags that have never been in process areas are sent to the dumpster. Nonline wet combustibles that possibly contacted caustic liquid are placed in a 55-gallon drum in Room 203. Any waste vacuum pump oil generated is placed in one-gallon jugs and sent to the OASIS process (Process 5). Basic liquid spills are collected in the building drainage system and recirculated back to the treatment process. Process Table 774-2 presents the outputs associated with Liquid Waste Process, and provides their dispositions and hazardous character.

Technical Services to Assist in Mixed
Radioactive/Hazardous and Geotechnical Waste
Management Services for the Department of Energy
at the Rocky Flats Plant

WASTE STREAM AND RESIDUE IDENTIFICATION AND CHARACTERIZATION

BUILDING 774

Version 3.2
November 1991

Prepared for:

EG&G
Rocky Flats Plant
Golden, Colorado

Prepared by:

WASTREN, Inc.
12000 N. Pecos, Suite 250
Westminster, Colorado

RECEIVED
MAR 1 5 1992

REVIEWED FOR CLASSIFICATION/UCNI
BY
DATE 04/16/92

P077

3.0 PROCESS 774-03: LIQUID WASTE - SECOND STAGE

The Caustic Liquid Waste - second stage process, completes treatment of basic aqueous waste initiated in Liquid Waste - First Stage and also treats wastes from Building 771 Tanks 309 East and West and Building generated wastes including ground water from the Room 103 sump. Batch precipitation tanks are used in the Stage 2 process.

The waste is received from Tank C-1 (clarifier) a part of the first stage process, then transferred to either Tank 201 or Tank 202 (at A, Figure 3.1). Waste is also received from Tanks 309E and 309W in the Building 771 annex. These are low-level tanks which receive waste from the decon showers, process sinks, and cooling tower water. The liquid waste is sampled at Tanks 309E and 309W before it is shipped to T201 or T202 to be sampled for total plutonium and americium. Tanks 201 and 202 receive return liquid from Tank 203 and 204 (at B, Figure 3.1) that did not meet the requirements for shipment to Building 374. Other miscellaneous inputs to Tanks 201 and 202 include ground water from the sump in Room 103, seal water, and building-generated solutions.

Once the basic liquid waste has been transferred to either Tanks 201 or 202, reagents including magnesium sulfate, ferric sulfate, calcium chloride, and Purifloc flocculant are added to the tanks. After circulation, the tanks are allowed to settle for eight hours to allow the precipitate to fall to the bottom. The liquid is decanted off to Tanks 203 or 204 (at B, Figure 3.1). The sludges at the bottom of Tanks 201 and 202 are drained and sent to Tank 40 for further treatment. Once the decanted liquid has been transferred to Tanks 203 and 204, a sample of the liquid is taken. If the sample has less than 10^3 pCi/liter total alpha activity, the liquid is shipped to Tank D875 in Building 374. If the sample has greater than 10^3 pCi/liter total alpha activity, the liquid is treated a second time in Tank 203 or Tank 204 by batch precipitation. Nonline inputs including Kimwipes/Texwipes, surgical gloves, leaded glovebox gloves, rags, and towels are used for general room cleanup and materials handling. Line inputs including Texwipes, vacuum pump oil, valves, pumps and lines, glovebox gloves, HEPA filters, and Oil Dry are used for system maintenance, cleanup, and air filtering.

The sludge remaining at the bottom of Tanks 203 and 204 is sent to Tank 40 (precipitation and filtration process) for further treatment. The second stage of the liquid waste treatment process generates much of the same waste as first stage. Leaded glovebox gloves, line generated light metals, and wet combustibles including cloth towels and Oil Dry are placed in 55-gallon drums in Room 203. Nonline dry combustibles including Kimwipes, Texwipes, surgical gloves, towels, paper coveralls, and paper are all placed in 55-gallon drums located in Room 203. Plenum prefilters, absolute glovebox filters and line dry combustibles including rags, tape, plastic jugs, and dried caustic liquid generated during maintenance are also placed in 55-gallon drums in Room 203. Drums of wet combustibles are only made up as needed when spills are cleaned up. During maintenance or stripout operations, several drums or crates of light metal and dry combustibles may be generated. An attempt is made to keep as much material out of the process area as possible. Nonline dry combustibles that include new reagent bags and cement bags that have never been in the process areas are sent to the dumpster outside Building 774. Any vacuum pump oil that is generated is placed in one-gallon jugs and taken to the OASIS Process. Process Table 774-3 presents the outputs associated with Caustic Liquid Waste Process - second stage, and provides their dispositions and hazardous waste character.

Two additional tanks are to be added to the system between Tanks 201/202 and 203/204. These will be Tanks 67 and 68. The tanks will be above ground, located on the exterior east side of Building 774. The tanks currently at that location are partially below ground and have not been used for some time. The new tanks will be used as holding tanks for liquids containing high concentrations of nitrates. If a sample taken for either Tank 203 or Tank 204 indicates the liquid has a high nitrate concentration, the liquid will be sent to Tank 67 or Tank 68 until Building 374 has the capability to accept the liquid. Another planned modification is the addition of a supernate polishing filter adjacent to Tanks 203/204. This filter will have the same function as the polishing filter in Building 374. The supernate from Tanks 203/204 may be sent to the filter to remove additional particles before being sent to Building 374. This filter is expected to be installed in approximately two years.

Process Table 774-3 gives the outputs associated with the Liquid Waste - Second Stage and defines their destinations and hazardous character.

4.0 PROCESS 774-04: PRECIPITATION/FILTRATION

The Precipitation/Filtration Process treats aqueous waste in two stages, removing radioactive contaminants from the waste and solidifying the material as transuranic mixed waste. Building 774 receives transuranic aqueous wastes from production facilities in Building 771. The precipitation process uses various holding tanks, pumps, controllers, valves, heat exchangers, evaporators, and numerous filters.

Transfer tanks accumulate the aqueous waste in Building 771. These tanks are sampled for plutonium and americium. If the measured levels are below the economic discard limit (EDL) and the nuclear material safety limit (NMSL), the tank contents are transferred into the Building 774 treatment processes.

Sludge from Tank C-1 in Caustic Liquid Waste - First stage is pumped to Tank T-9 (at A Figure 4.1). Silver recovery effluent and sludge from various tanks in Caustic Liquid Waste Process - Second stage are pumped to Tank 40 (at B, Figure 4.1). The waste from Tank 40 and Tanks 4L, 4R, and 12 in the Neutralization Process are pumped to Tank 210A (at C, Figure 4.1). Sludge from Tanks T-9 and 210A feed the vacuum filter (at D, Figure 4.1). The combined solids stream from these tanks is then sent to a precoated rotary drum vacuum filter which separates out the solids. The resultant wet sludge is solidified with cement and a small amount of filtrate in the rotary drum vacuum filter glovebox.

The slurry waste stream is pulled through the filter pad by a vacuum inside the rotating filter drum. A thin layer of filter pad plus solid contaminants from the slurry is continuously scraped off the outside of the filter. The sludge is collected in a 55-gallon drum which contains a rigid polyethylene liner and an inner PVC liner. A Portland cement/diatomite mixture is added to the drum along with the sludge as it drops into the drum. The cement/diatomite is added to the glovebox via a hopper and screw feeder mounted on the outside of the glovebox. The filtrate is recycled back into the first stage precipitation process described in Liquid Waste Process - First stage. Gloves, Oil Dry, Kimwipes, towels, and paper coveralls are used for general room cleanup and materials handling. Oil, HEPA filters, valves, pumps, and lines are used for system maintenance.

The resultant solidified sludge is placed in 55-gallon drums and handled as a transuranic mixed waste; these drums are then taken to Room 241. Excess filtrate separated from the solids in the vacuum filter is piped to Tanks 1RF or 1A, to be handled as part of Process 2, Caustic Liquid Waste - First stage. Exhaust air is passed to the building filter plenum system and then to the atmosphere. Line-dry combustibles, line-wet combustibles, glovebox gloves, line-light metal, plenum pre-filters, and glovebox filters are taken to Room 203 and put in the appropriate 55-gallon drums. Waste oil is placed in one-gallon plastic jugs, and nonline dry combustibles are placed in 55-gallon drums and sent to the storage unit in Room 241. Process Table 774-4 presents the outputs associated with the Precipitation/Filtration process, and provides their dispositions and hazardous character.

5.0 PROCESS 774-05: OASIS

The Organic and Sludge Immobilization System (OASIS) Process accepts waste oils from any building at the RFP that contain transuranic material, and combines the waste with emulsifier, Envirostone, and accelerator to solidify the mixture for transport in drums. Most of the waste oil comes from Buildings 707, 776, and 777. The OASIS process uses various holding tanks, pumps, controllers, valves, and mixers.

Waste oil being transferred from Buildings 707, 776, and 777 is stored in Tanks T-13 and T-14 (at A, Figure 5.1). A third tank, T-374A, has been used in the past to store feed to this system, but it has been tagged out, and there are no plans to use it in the future. From the tanks, the waste oil is pumped to the OASIS glovebox mixer (at B, Figure 5.1). The pump is enclosed in a small glovebox. Oil, water, emulsifier, Envirostone, and accelerator (to speed up the setting process) are mixed in a 55-gallon drum attached to the bottom of the glovebox. After the mixture has set, the drum is moved to Room 241 for storage. Surgical gloves, Kimwipes, tape, plastic, and paper are used for general room cleanup and materials handling.

After a sufficient number of drums have accumulated in Room 241, (including waste drums not associated with the OASIS process), the waste is shipped to the 771 Annex or to Building 371 for counting. Glovebox exhaust is discharged to the main HEPA filter plenum in Room 341, and then to the atmosphere. In addition to the solidified waste oil, outputs from the OASIS process include leaded gloves, contaminated coveralls, glovebox filters, metal, glass, glovebox filters, and line-generated combustibles such as surgical gloves, paper, Kimwipes, plastic, and tape. These wastes are put in the appropriate 55-gallon drums in Room 203, then sent to Building 371 or 771 for counting. Nonline-generated combustibles such as tape, plastic, Kimwipes, paper, and surgical gloves are generated throughout the building, collected in a 55-gallon drum and placed in Room 241. Sanitary trash (packaging waste) is placed in a dumpster adjacent to the powder shed. Process Table 774-5 presents the outputs associated with OASIS and provides their dispositions and hazardous character.

Technical Services to Assist in Mixed
Radioactive/Hazardous and Geotechnical Waste
Management Services for the Department of Energy
at the Rocky Flats Plant

WASTE STREAM AND RESIDUE IDENTIFICATION AND CHARACTERIZATION

BUILDING 774

Version 3.2

Prepared for:

EG&G
Rocky Flats Plant
Golden, Colorado

Prepared by:

WASTREN, Inc.
12000 N. Pecos, Suite 250
Westminster, Colorado

RECEIVED
SEP - 3 1992
REVIEWED FOR CLASSIFICATION/UCNI
BY
DATE 8/31/92

CO77

The Overview Document contains information on the various methods of data acquisition used during the program and lists the terms, acronyms, and abbreviations used in this report. All the building reports will use the same format and organization. Each will contain an introductory section, a number of process description sections, and appendices for supporting material.

Each book begins with an Executive Summary. It briefly describes the building's processes, waste streams, residues, and waste stream destinations.

Section 0.0 contains a brief program overview, document organization, introductory material on the specific building covered in the report, and the numbering system used to differentiate processes, waste streams, and waste management units (WMUs).

The remaining sections contain descriptions of the processes occurring within the building. Each section contains all the information exclusive to a given process. The process is described using a standardized presentation of narrative discussion, a flow diagram, a table presenting the process outputs, and a form describing each of the process outputs in further detail.

Appendix A contains one-page descriptions of the WMUs located in the building, the waste streams stored in the building, and the subsequent waste stream destinations.

0.3 Overview of Building

Building 774 is a liquid waste treatment facility that receives highly radioactive acid wastes, caustic wastes, waste oils and nonradioactive photographic solutions from Buildings 111, 122, 130, 371, T371-J, 441, 444, 460, 551, 559, 664, 707, 750, 771, 774, 776, 777, 881, and 991. The facility contains seven processes; neutralization, liquid waste treatment - first and second stages, precipitation, OASIS, silver recovery, and maintenance. All processes in Building 774, with the exception of maintenance and silver recovery, are interrelated in that they use a series of tanks and pumps connected by pipes to treat acidic, caustic, and other radioactive wastes, and separate relatively low-level effluent from contaminated solids or sludges. The neutralization process mixes highly radioactive acid waste generated during plutonium reprocessing with sodium hydroxide. The liquid waste treatment process - stages 1 and 2, treats basic liquid waste transferred from Building 771 to Building 774 for treatment. The precipitation process treats aqueous waste in a two-stage process during which radioactive contaminants are removed from waste and solidified as TRU-mixed wastes. The aqueous wastes are transferred from plutonium reprocessing operations in Building 771. The OASIS process accepts waste oils containing transuranic material from any building and combines these liquid wastes with solidifying agents. The silver recovery process passes waste photographic solution through a silver recovery unit to recover the silver and form it into ingots. The last process, maintenance, provides support operations related to all tanks, pumps, gloveboxes, and related pipes in Building 774, along with support for stripout operations that remove or replace existing equipment. All processes, with the exception of maintenance, use chemicals or materials which are consumed.

Wastes generated in Building 774 include liquid waste, waste sludge, solidified waste sludge and waste oils, along with filters, metals, plastic and combustibles. Silver ingots are produced as a recoverable product from the waste photographic solution and are stored in a safe in Building 774. Low-level aqueous wastes are piped to tanks in Building 374. Waste oils, generated from

equipment and maintenance in Building 774, are stored in Room 241 until they can be batch processed into a solid form. Drybox gloves, filters, light metals and line-generated combustibles are collected in drums in Room 203. Non-line combustibles including Kimwipes, Texwipes and surgical gloves are collected in 55-gallon drums located in Room 203, then packaged into 55-gallon drums and stored in Room 241. The drums of solid waste and solidified sludges are sampled and stored in Room 220 or 241. The drums are then sent to the Real Time Radiography (RTR) unit for waste form certification. From RTR, the drums are transferred to a drum storage area or sent to Building 664 and held prior to being sent to a disposal site. Used high efficiency particulate air (HEPA) filters are placed in shipping coffins in Rooms 341 and 441 and sent to B Dock. The coffins are then sent to the drum counter or crate counter for counting and to the Size Reduction Facility (SRF), Building 776, for size reduction and packaging prior to disposal. Spent batteries are sent to Building 061 (U&D).

0.4 List of Processes in Building

774-01, Neutralization
774-02, Basic Liquid Waste - Stage 1
774-03, Basic Liquid Waste - Stage 2
774-04, Precipitation/Filtration
774-05, Oasis
774-06, Silver Recovery
774-07, Maintenance
774-08, General Waste
774-09, Miscellaneous Waste Handling

0.5 Numbering Systems

EG&G and its subcontractors have devised three numbering systems to uniquely identify each process, waste stream, and WMU at RFP. The process numbering system is described in Section 0.5.1; the waste stream numbering system is described in Section 0.5.2; the WMU numbering system is described in Section 0.5.3.

0.5.1 Process/Output Numbering System

Each process that occurs or has occurred at RFP has been assigned a unique number that consists of the building number, a number assigned to a given process within the building, and an output number. The following is an example of a process/output number:

111-01-05

The first field, "111," identifies the building, and the second field, "01," is the number assigned to a specific process within Building 111. If an additional process were housed in Building 111, it would be given the number "111-02." In this manner, all processes at RFP have a distinct label. The third field, "05", is the output number. This is a sequential number given to each waste stream within a process. In cases where waste streams within the same building and process have identical IDC and CCC codes (see Section 0.5.2), the output number will uniquely identify each.

9.0 PROCESS 774-09: MISCELLANEOUS WASTE HANDLING

The treatment of aqueous waste is carried out during the Miscellaneous Waste Handling process. Waste is primarily generated through processes in Buildings 559, 771, and 371. Aqueous waste containing complexing agents detrimental to the radioactive decontamination process and containing certain radioactive isotopes or hazardous chemicals undesirable in the regular waste system are entered into the solidification process. The bulk of these wastes are received as package shipments, though some are received by pipeline transfer from the Building 771 Recovery Operations into Tank T-7. Figure 9.1 shows the inputs, process flow, and outputs associated with the Miscellaneous Waste Handling Process.

Specially prepared waste shipping drums, containing a mixture of Portland cement and an absorbent material, are attached by O-ring drum liner to the solidification glovebox, No. 4. All waste must be basic before placement in the drums.

Packaged waste received in plastic bottles is entered through an airlock into the glovebox. The bottles containing acid waste are emptied by vacuum into receiver and neutralizer Tank T-7, adjacent to the glovebox. A pH indicator solution is added to the waste, then a sodium hydroxide reagent is added until the color indicator shows the contents of the tank to be basic. The neutralized waste is drained by gravity back into the glovebox. There, a connecting hose directs the waste into the prepared drum. A maximum of 25 gallons of basic waste solution can be added to the prepared drum. The absorbent material in the drum carries the waste solution through the Portland cement. The cement chemically reacts with the waste solution to form a solid.

Basic bottled waste enters the glovebox and is poured directly into the prepared drum. The empty bottles are discarded into a shipping drum attached to the glovebox. Highly concentrated chloride waste is received from Building 771 Recovery Operations by pipeline into Tank 7, neutralized (as described earlier) and drained into the prepared drum(s).

The filled shipping drums are separated from the glovebox by the standard bag cut procedure. The 55-gallon sludge drums containing cemented solids from the Unit 57 glovebox are taken to Rooms 241 or 220, then to the RTR unit to determine if there are any free liquids present. These drums will be disposed as Transuranic-mixed waste. Glovebox HEPA filters are placed in the appropriate 55-gallon drum in Room 203. Plastic bottles are also placed in a 55-gallon drum in Room 203. Glovebox gloves are placed in a satellite collection area. Glovebox exhaust is vented through the building filter plenum. Process Table 774-9 presents the outputs associated with the Miscellaneous Waste Handling Process and provides their dispositions and hazardous character.

gloves, and waste light metals including pumps, valves, lines, and tanks generated during maintenance are taken to the appropriate 55-gallon drum in Room 203. Nonline dry combustibles including Kimwipes, surgical gloves, towels, and paper, line-wet combustibles (cloth towels), and line-generated dry combustibles including rags, tape, and dried caustic liquid are drummed and stored in Room 241. Plastic waste, consisting of booties, gloves, and supplied air suits, is collected in the appropriate satellite collection area. Nonline-generated dry combustibles including new reagent bags and cement bags that have never been in process areas are sent to the dumpster. Nonline wet combustibles that possibly contacted caustic liquid are placed in a 55-gallon drum in Room 203. Any waste vacuum pump oil generated is placed in one-gallon jugs and sent to the OASIS process (Process 5). Basic liquid spills are collected in the building drainage system and recirculated back to the treatment process. Process Table 774-2 presents the outputs associated with Liquid Waste Process, and provides their dispositions and hazardous character.

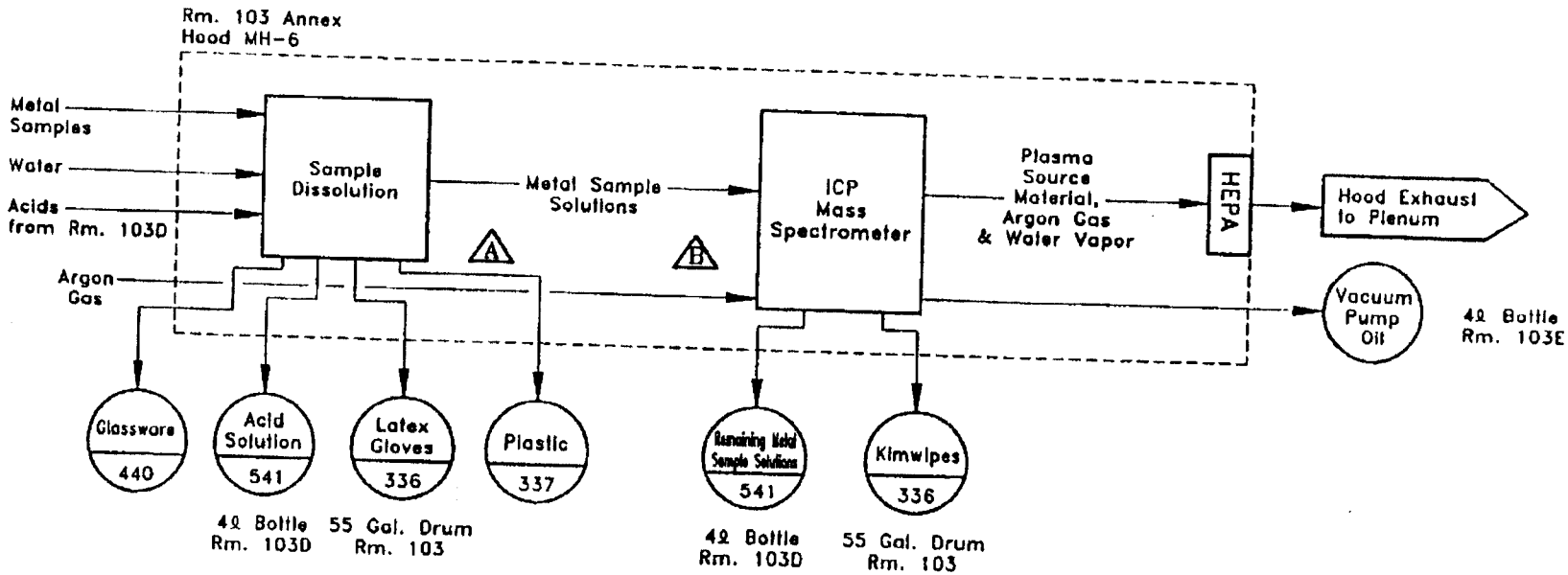

FIGURE 1.1

Rocky Flats Plant Waste Stream & Residue Identification & Characterization	BUILDING 559/PROCESS 1 ICP MASS SPECTROMETRY	Task	By	Date
		Designed	F. Kabot	4/11/90
		Drawn	J.D. Sikora	8/6/90
		Checked	R. Medlyn	8/7/90

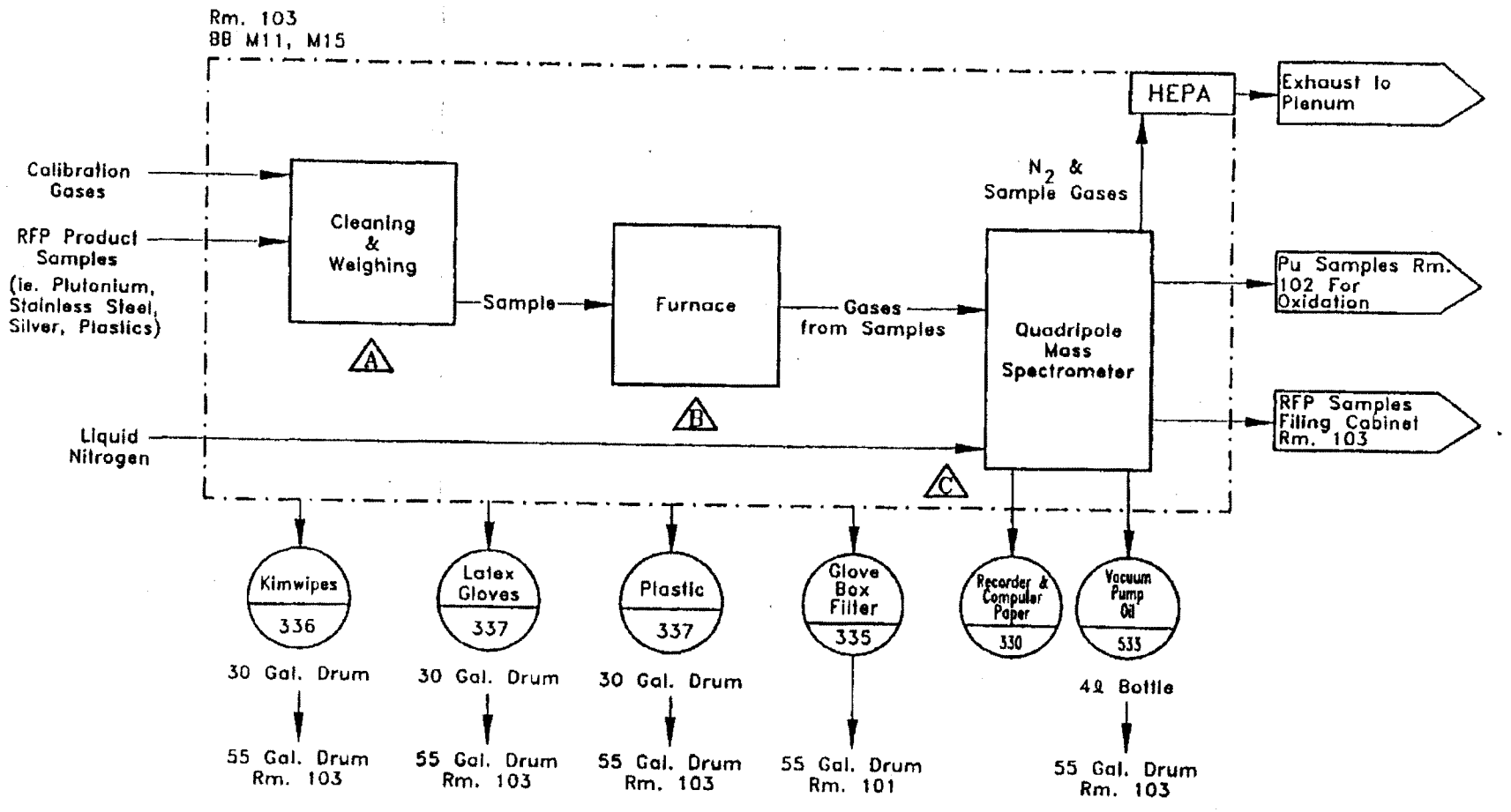

FIGURE 2.1

Rocky Flats Plant Waste Stream & Residue Identification & Characterization	BUILDING 559/PROCESS 2 DYNAMIC ANALYSIS (RESIDUAL GAS ANALYSIS)	Task	By / Date
		Designed	F. Kabot 4/19/90
		Drawn	J. Sikora 8/6/90
		Checked	R. Madlyn 8/7/90

AutoCAD 11, File Name: f559-23e 04/15/93

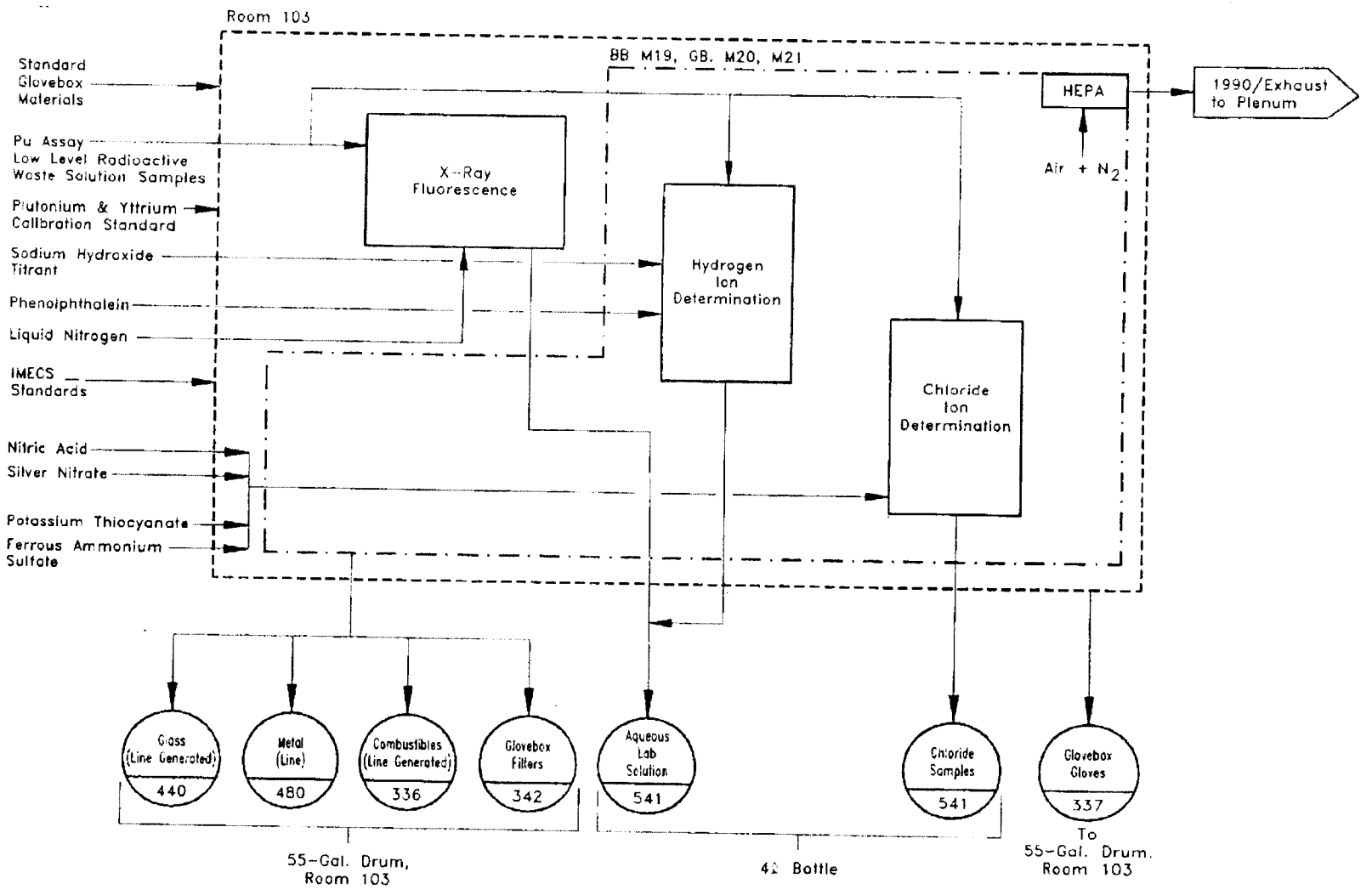

FIGURE 3.1

Rocky Flats Plant Waste Stream & Residue Identification & Characterization	BUILDING 559/PROCESS 3 X-RAY FLUORESCENCE			
		Task	By	Date
		Designed	F. Kabot	04/19/90
		Drawn	K. Kolleth	08/20/90
		Checked	B. Riddle	04/15/93

AutoCAD 11, File Name: f559-24f 9/25/91

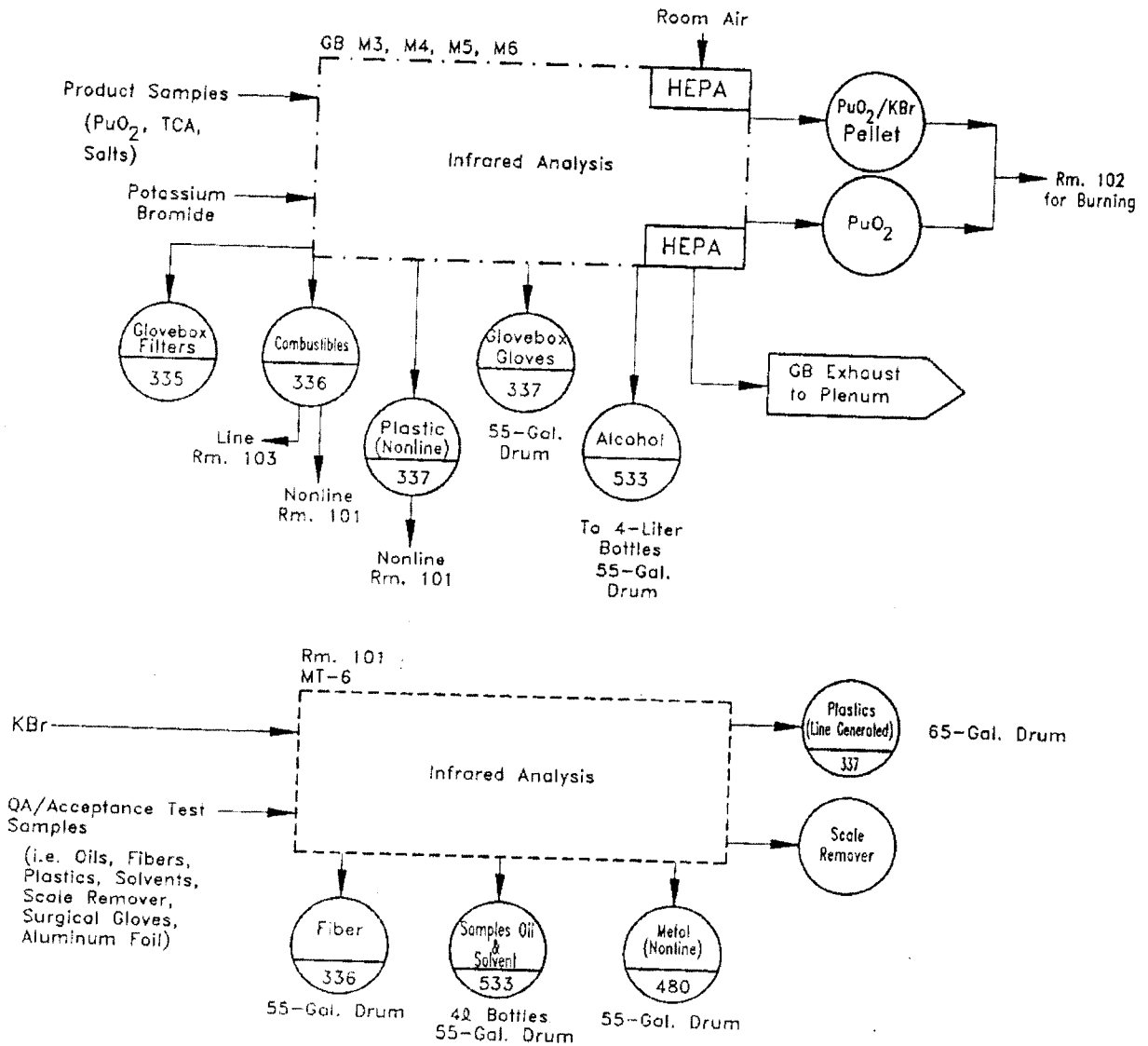

FIGURE 4.1

Rocky Flats Plant Waste Stream & Residue Identification & Characterization	BUILDING 559/PROCESS 4 INFRARED ANALYSIS	

Task	By	Date
Designed	F. Kabot	4/23/90
Drawn	C. Grilli	7/3/90
Checked	B. Peterson	9/23/91

AutoCAD 11, File Name: f774-9c 10/21/92

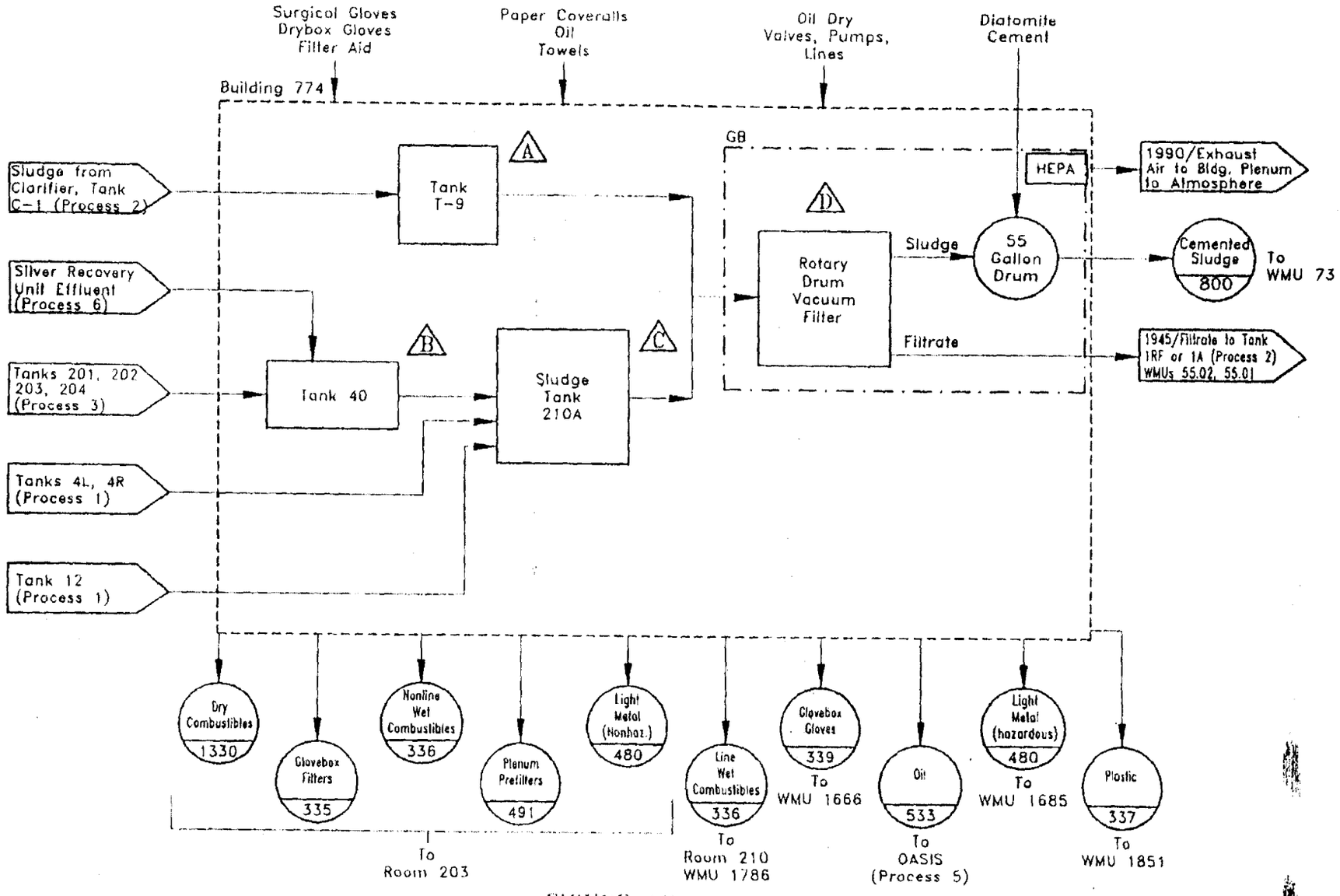

FIGURE 4.1

Rocky Flats Plant Waste Stream & Residue Identification & Characterization	BUILDING 774/PROCESS 4 PRECIPITATION/FILTRATION	Task	By	Date
		Designed	C. Wood	4/23/90
		Drawn	C.B. Grilli	7/14/90
		Checked	[illegible]	8/21/92

AutoCAD 11, File Name: f559-25e 08/27/93

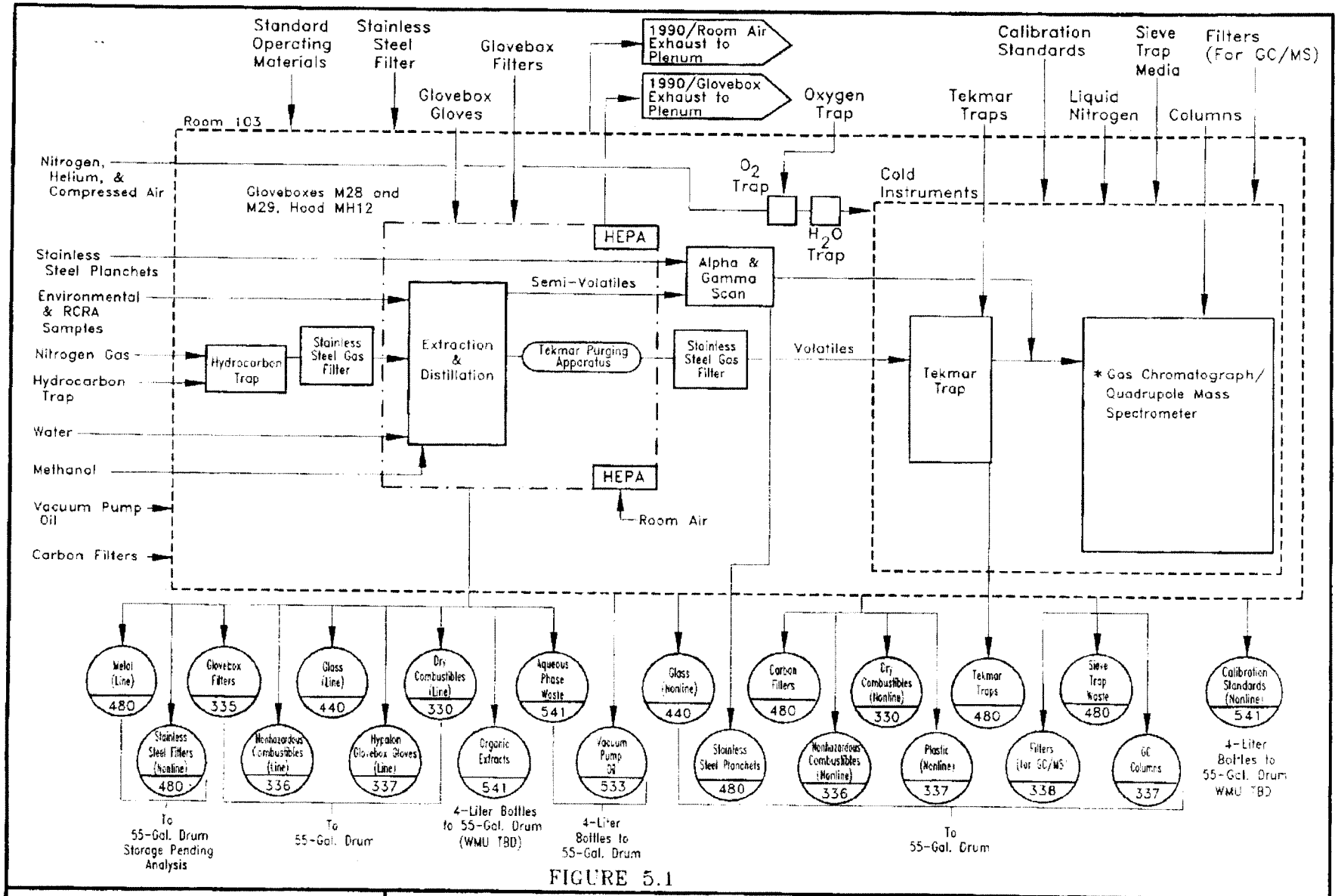

FIGURE 5.1

Rocky Flats Plant Waste Stream & Residue Identification & Characterization	BUILDING 559/PROCESS 5 GC/MS ENVIRONMENTAL SAMPLES/RCRA WASTE	Task	By	Date
		Designed	F. Kabot	04/11/90
		Drawn	J. Sikora	07/02/90
		Checked	B. Riddle	08/27/93

AutoCAD 11, File Name: f774-6d 8/21/92

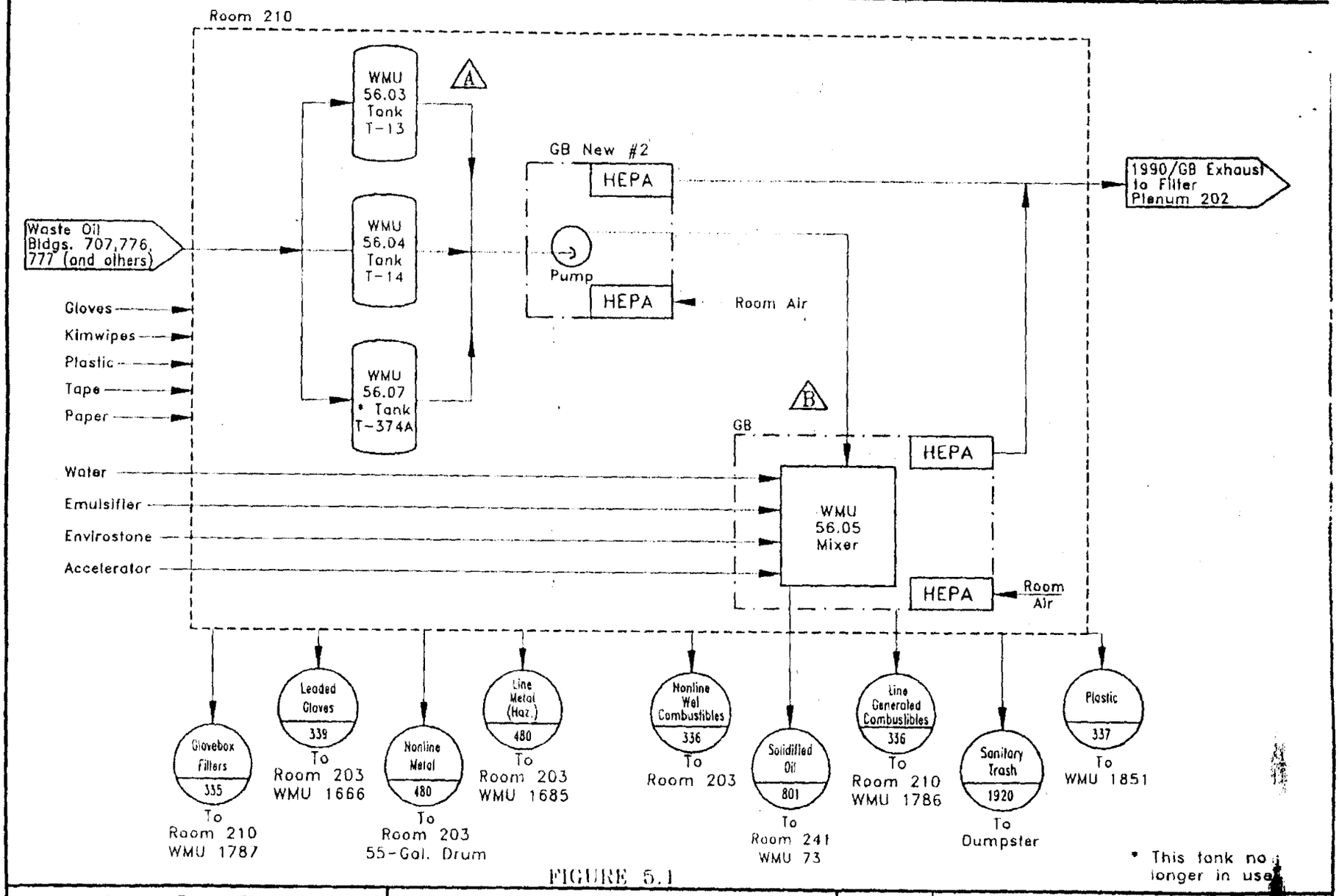

FIGURE 5.1

Rocky Flats Plant Waste Stream & Residue Identification & Characterization	BUILDING 774/PROCESS 5 OASIS	Task / Designed / Drawn / Checked D. Gelston / J.D. Sikora / J. Johnson Date 4/19/90 / 7/19/90 / 8/21/92

AutoCAD 11, File Name: f559-20c 04/01/93

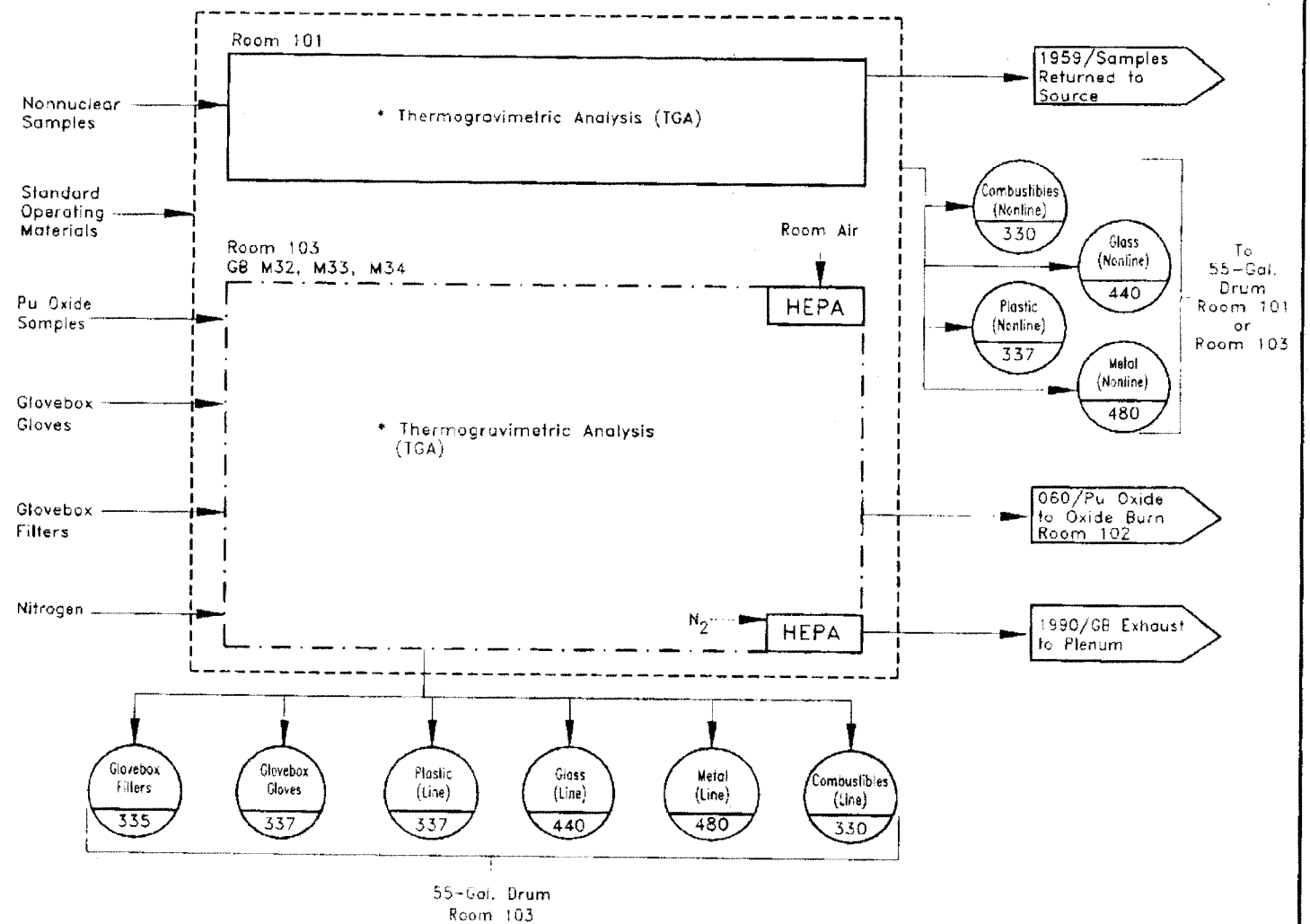

FIGURE 6.1

Rocky Flats Plant Waste Stream & Residue Identification & Characterization	BUILDING 559/PROCESS 6 THERMAL ANALYSIS	Task	By	Date
		Designed	B. Riddle	11/05/92
		Drawn	C. Stadt	11/11/92
		Checked	K. Tilton	04/01/93

AutoCAD 11, File Name: f559-10d 08/27/93

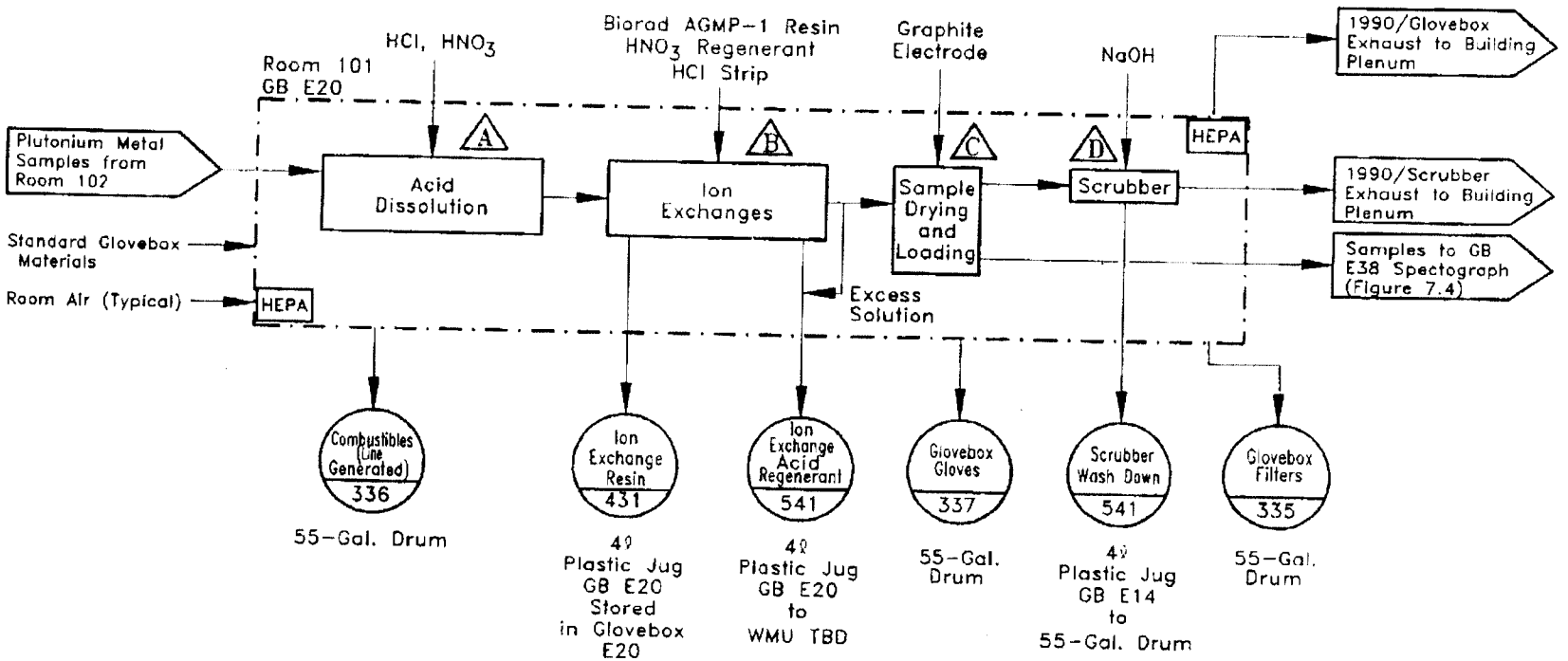

FIGURE 7.1

Rocky Flats Plant Waste Stream & Residue Identification & Characterization	BUILDING 559/PROCESS 7 EMISSION SPECTROSCOPY - SAMPLE PREPARATION	Task	By / Date
		Designed	W. Eakins 11/21/92
		Drawn	C. Stadt 12/01/92
		Checked	B. Riddle 08/27/93

AutoCAD 11, File Name: f559--16e 9/24/91

SUPERSEDED

Replaced by DCN 559-91-01 Dated 12-11-91

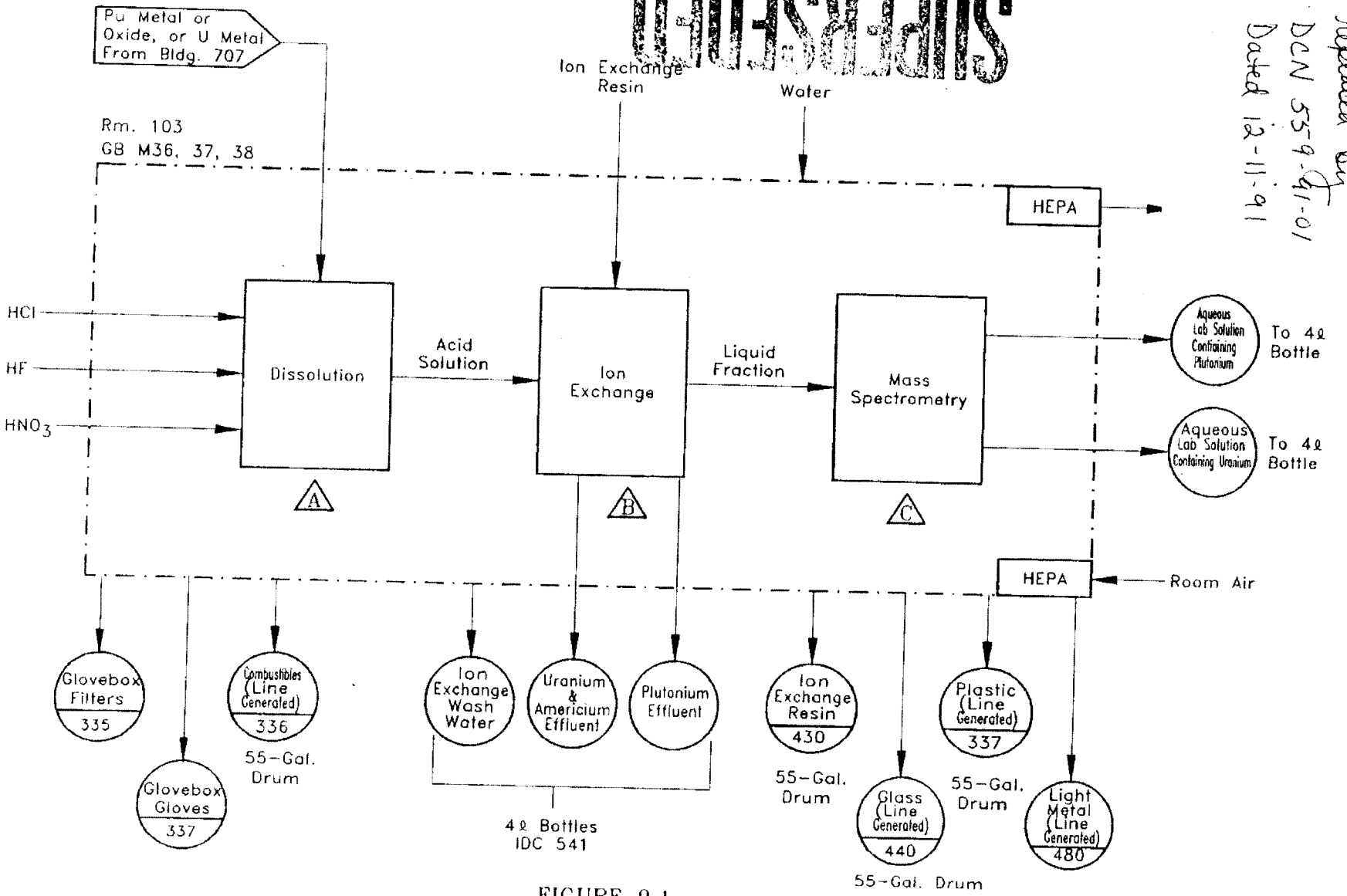

FIGURE 9.1

Rocky Flats Plant Waste Stream & Residue Identification & Characterization	BUILDING 559/PROCESS 9 ISOTOPIC ANALYSIS	Task	By	Date
		Designed	F. Kabot/J. Kleckner	5/9/90
		Drawn	J.D. Sikora	6/27/90
		Checked	B. Peterson	9/23/91

AutoCAD 11, File Name: f559-15d 08/27/93

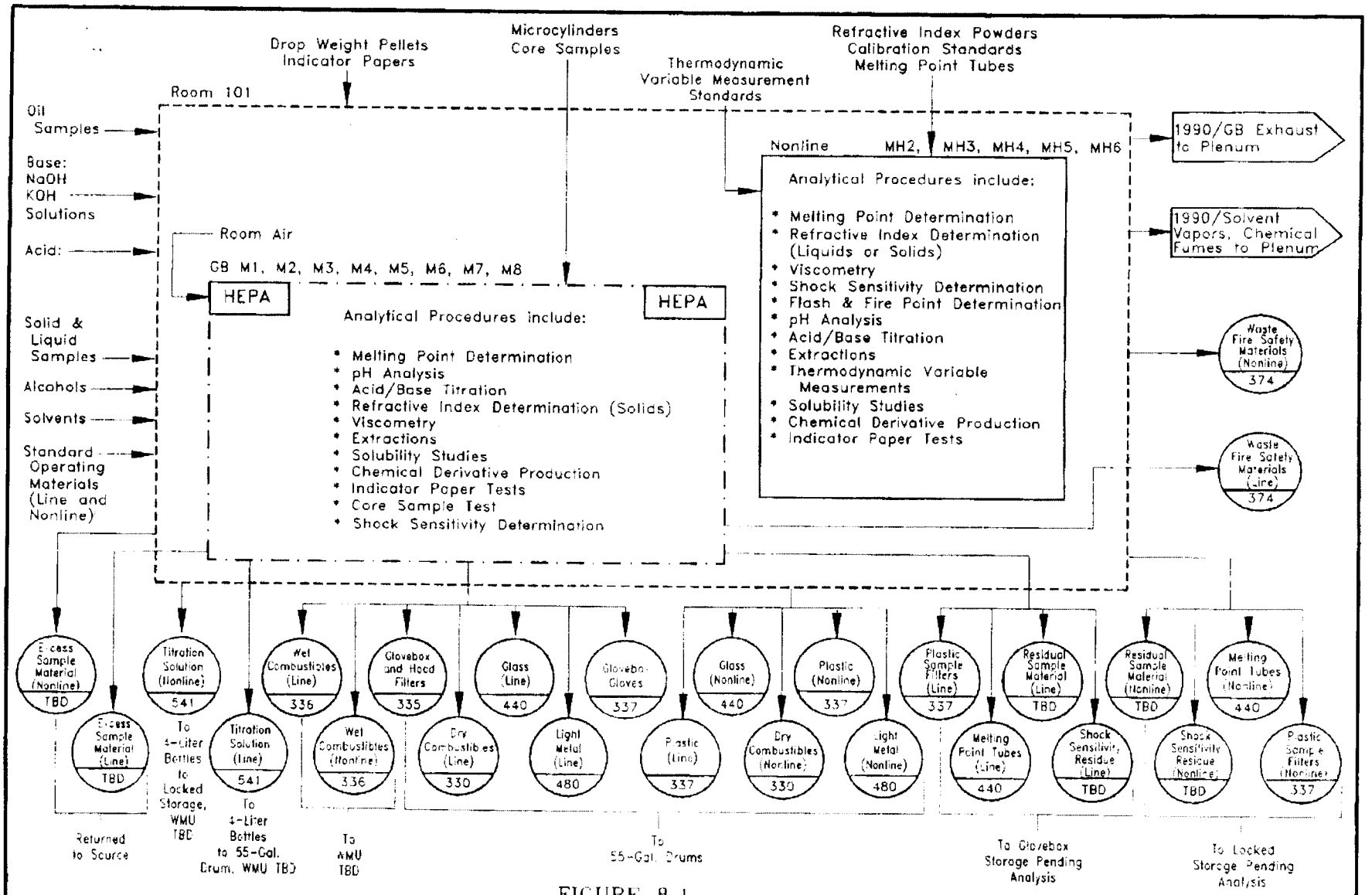

FIGURE 8.1

Rocky Flats Plant Waste Stream & Residue Identification & Characterization	BUILDING 559/PROCESS 8 MISCELLANEOUS ANALYSES	Task	By	Date
		Designed	B. Riddle	01/14/93
		Drawn	C. Stadt	01/14/93
		Checked	B. Riddle	08/27/93

AutoCAD 11, File Name: f559-8.2a 08/27/93

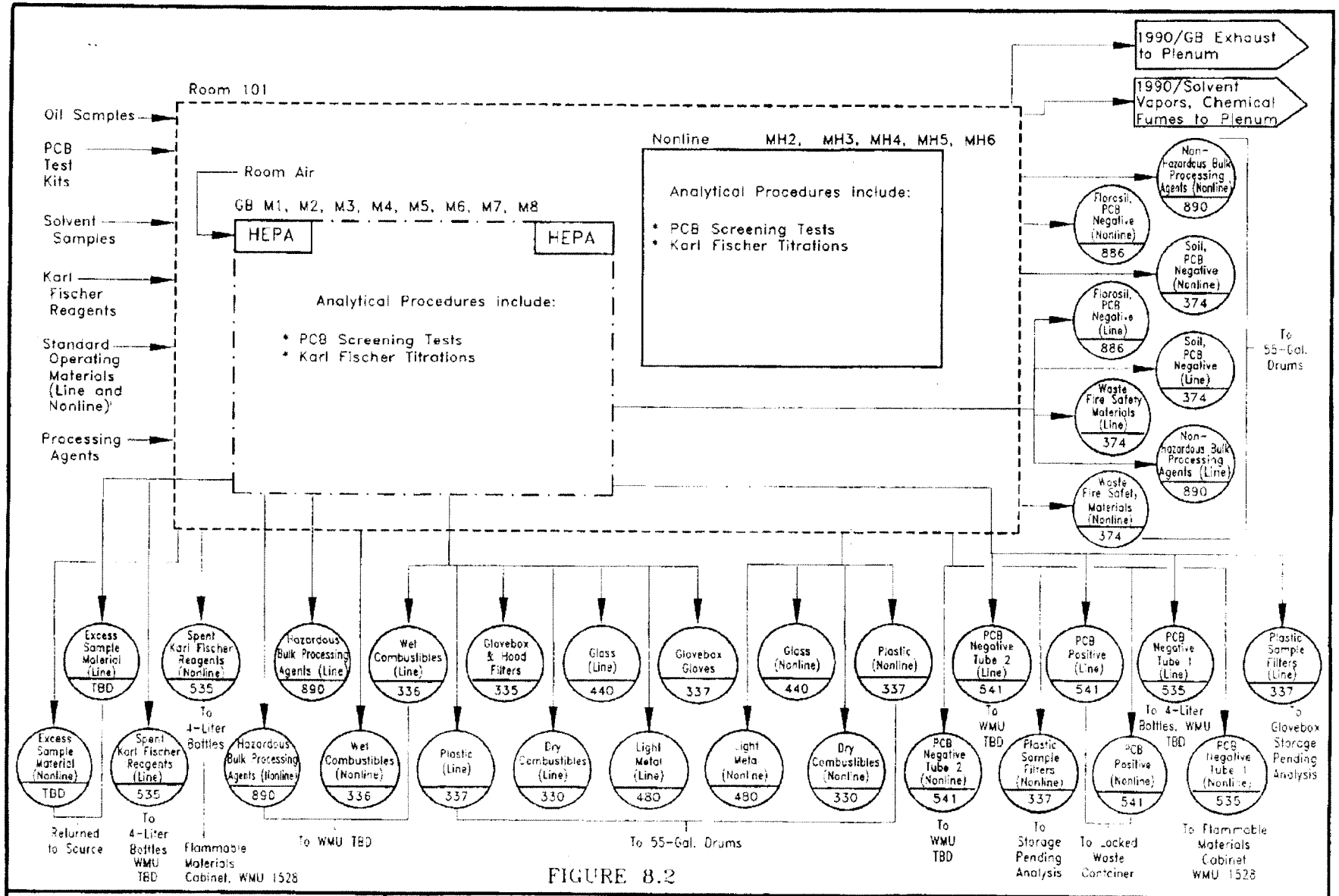

FIGURE 8.2

Rocky Flats Plant Waste Stream & Residue Identification & Characterization	BUILDING 559/PROCESS 8 MISCELLANEOUS ANALYSES	Task	By	Date
		Designed	B. Riddle	02/02/93
		Drawn	C. Stadt	02/04/93
		Checked	B. Riddle	07/27/93

AutoCAD 11, File Name: 1559-7e 9/24/91

559-V3.2

12-2

9/27/91

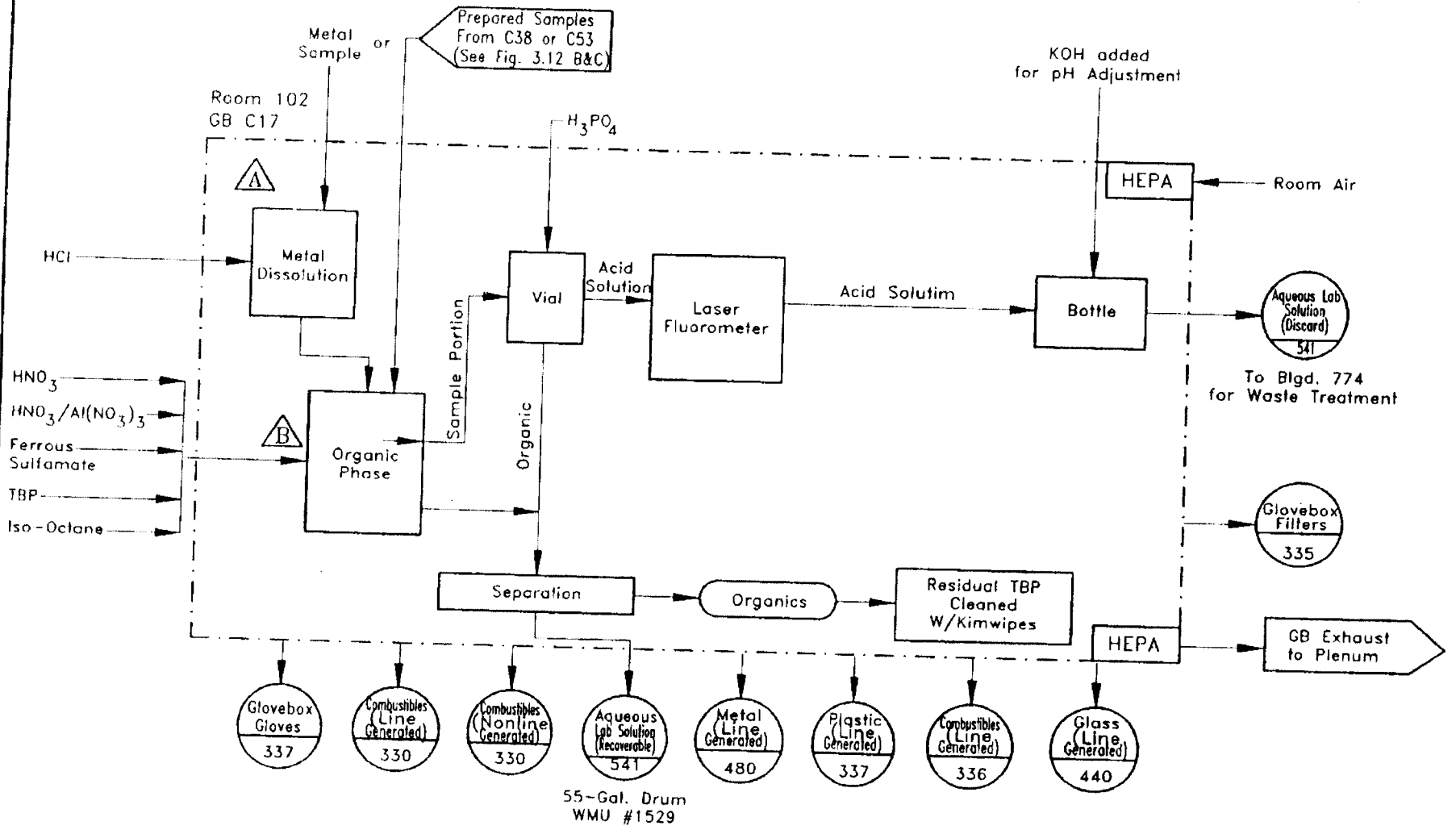

FIGURE 12.1

Rocky Flats Plant Waste Stream & Residue Identification & Characterization	BUILDING 559/PROCESS 12 URANIUM ANALYSIS (GENERAL)			
		Task	By	Date
		Designed	D. Gelston	5/2/90
		Drawn	J.D. Sikora	6/28/90
		Checked	B. Peterson	9/23/91

AutoCAD 11, File Name: f559-12d 9/24/91

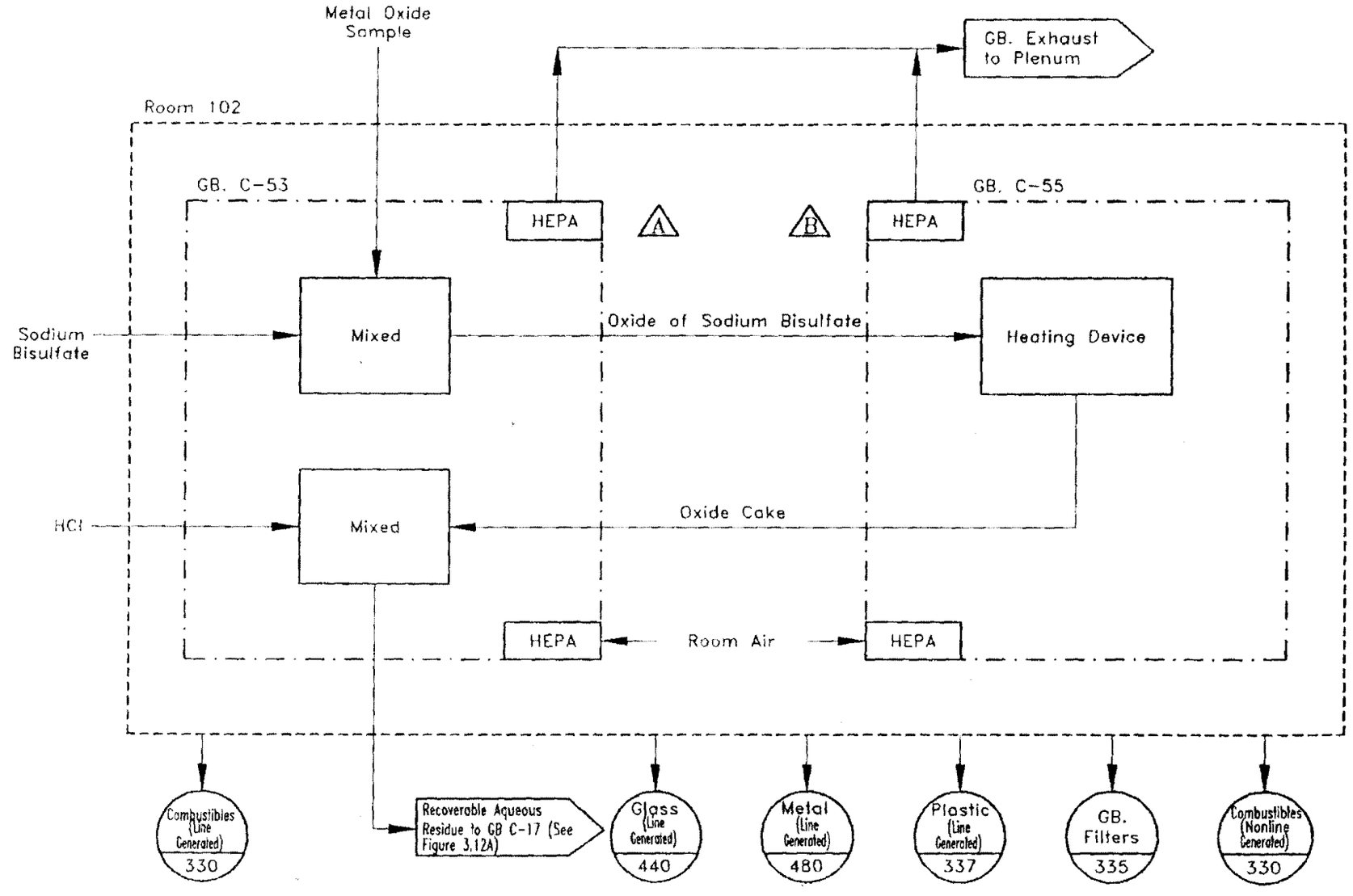

FIGURE 12.2

Rocky Flats Plant Waste Stream & Residue Identification & Characterization	BUILDING 559/PROCESS 12 URANIUM ANALYSIS (METAL OXIDE PREP.)	Task	By	Date
		Designed	D.Gelston	5/2/90
		Drawn	E.B.McDonald	6/26/90
		Checked	B. Peterson	9/23/91

AutoCAD 11, File Name: f559-13f 9/24/91

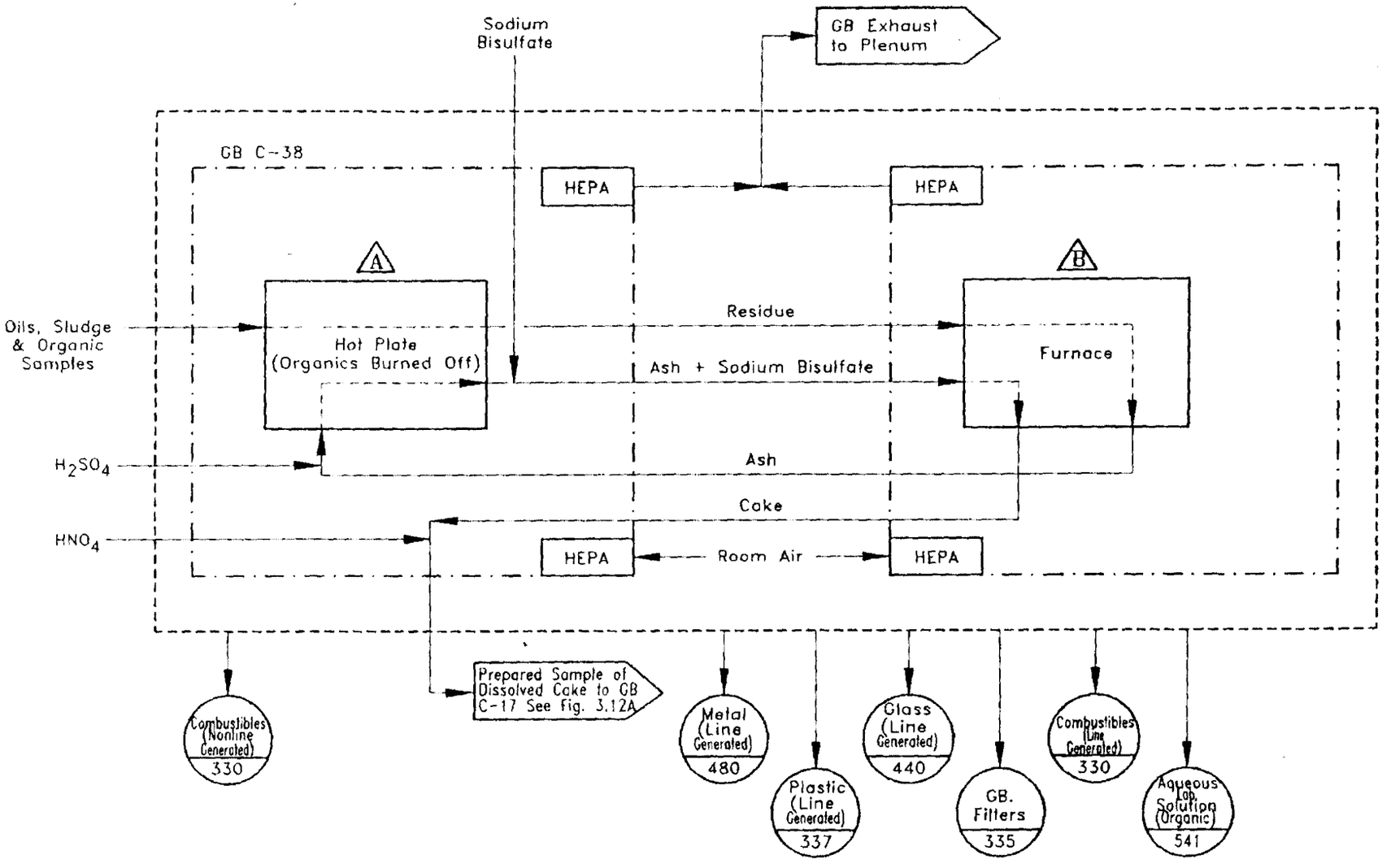

FIGURE 12.3

Rocky Flats Plant Waste Stream & Residue Identification & Characterization Sheet 10 of 13	BUILDING 559/PROCESS 12 URANIUM ANALYSIS (SLUDGE PREP.)	Task	By	Date
		Designed	D.Gelston	5/2/90
		Drawn	E.B.McDonald	7/30/90
		Checked	B. Peterson	9/23/91

AutoCAD 11, File Name: f559-4e 9/24/91

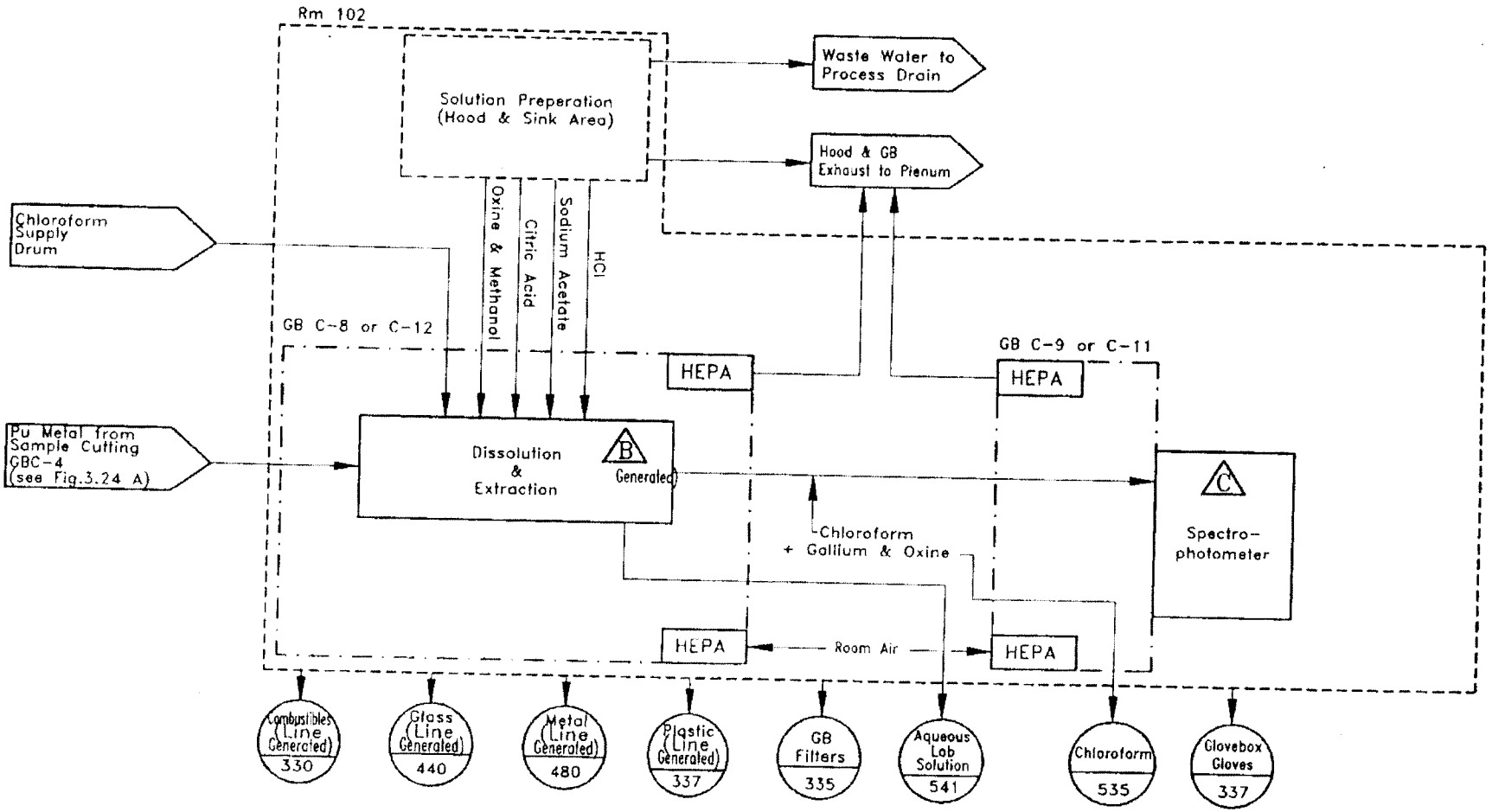

FIGURE 13.1

Rocky Flats Plant Waste Stream & Residue Identification & Characterization	BUILDING 559/PROCESS 13 GALLIUM ANALYSIS	Task	By	Date
		Designed	D. Gelston	5/3/90
		Drawn	C.B. Grilli	7/12/90
		Checked	B. Peterson	9/23/91

AutoCAD 11, File Name: f559-5e 9/24/91

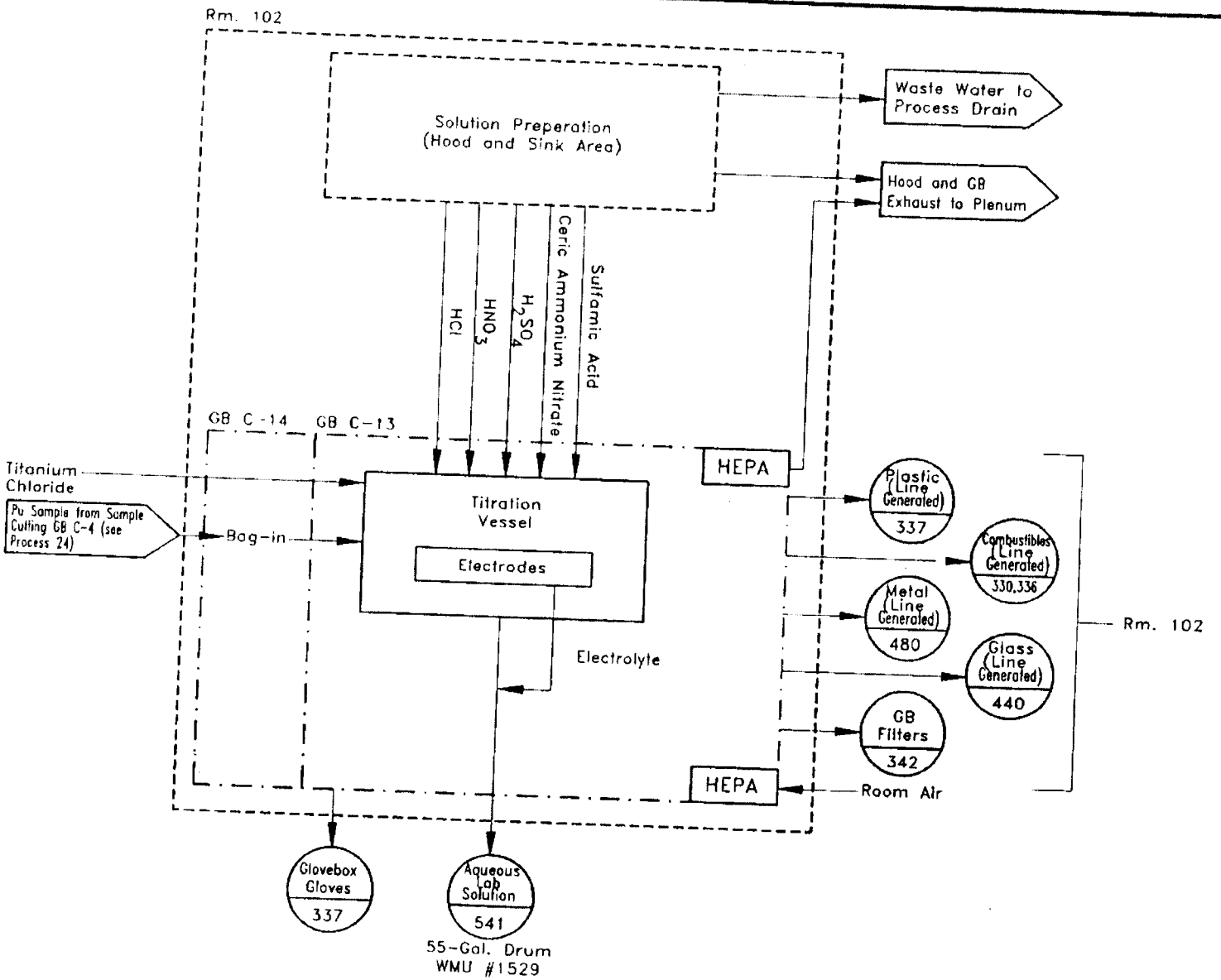

FIGURE 14.1

Rocky Flats Plant Waste Stream & Residue Identification & Characterization	BUILDING 559/PROCESS 14 PLUTONIUM ASSAY			
		Task	By	Date
		Designed	D. Gelston	5/3/90
		Drawn	K. Tate	7/12/90
		Checked	B. Peterson	9/23/91

AutoCAD 11, File Name: f559-37e 9/24/91

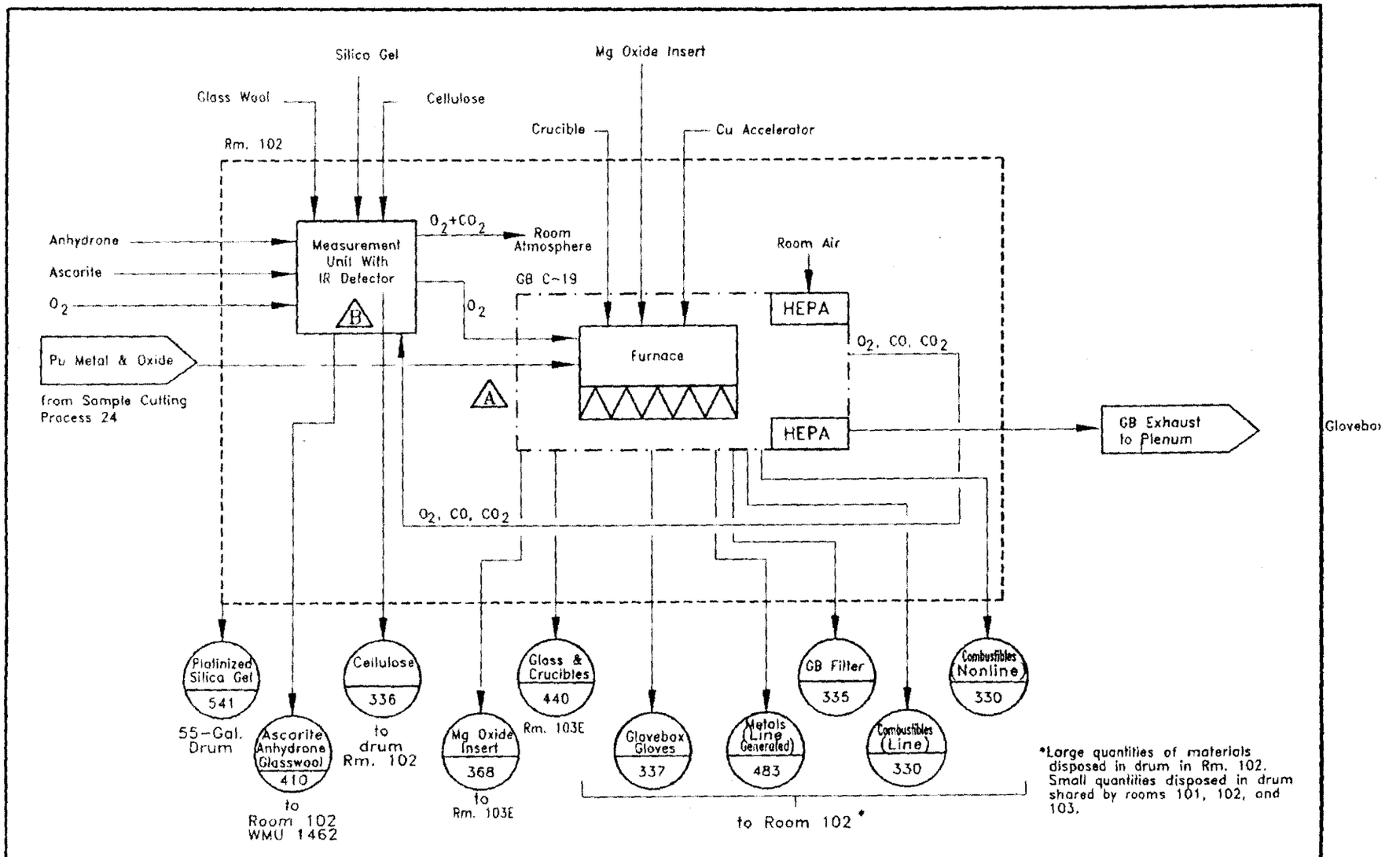

FIGURE 15.1

Rocky Flats Plant Waste Stream & Residue Identification & Characterization	BUILDING 559/PROCESS 15 CARBON ANALYSIS	Task	By	Date
		Designed	D. Gelston/ J. Kleckner	5/17/90
		Drawn	J.D. Sikora	8/6/90
		Checked	B. Peterson	9/23/91

AutoCAD 11. File Name: f559-8f 9/24/91

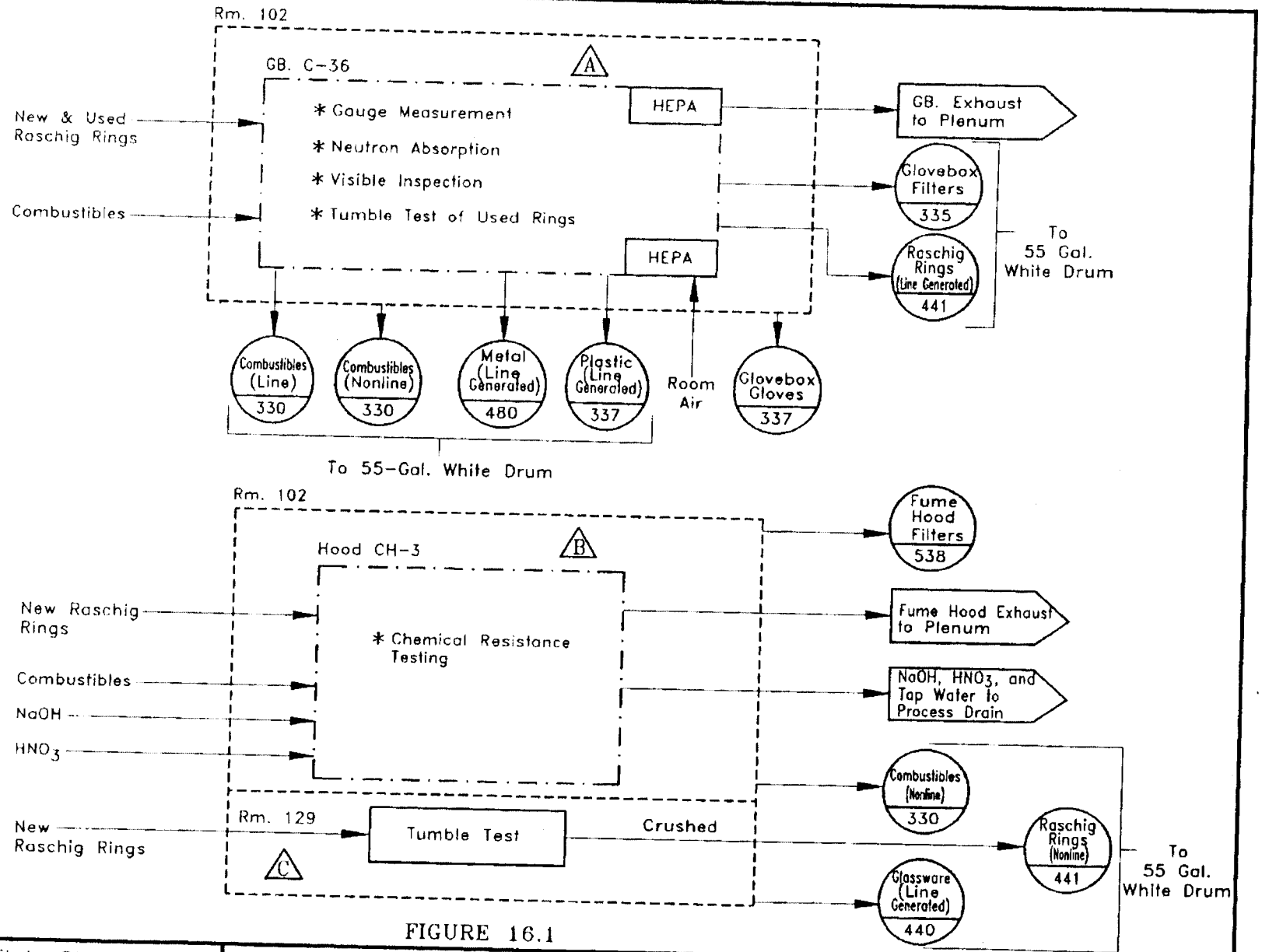

FIGURE 16.1

Rocky Flats Plant Waste Stream & Residue Identification & Characterization	BUILDING 559 / PROCESS 16 RASCHIG RING ANALYSIS	Task	By	Date
		Designed	D. Gelston	5/14/90
		Drawn	C.K. Harrington	8/6/90
		Checked	B. Peterson	9/23/91

AutoCAD 10, File Name: f559-26e 2/6/91

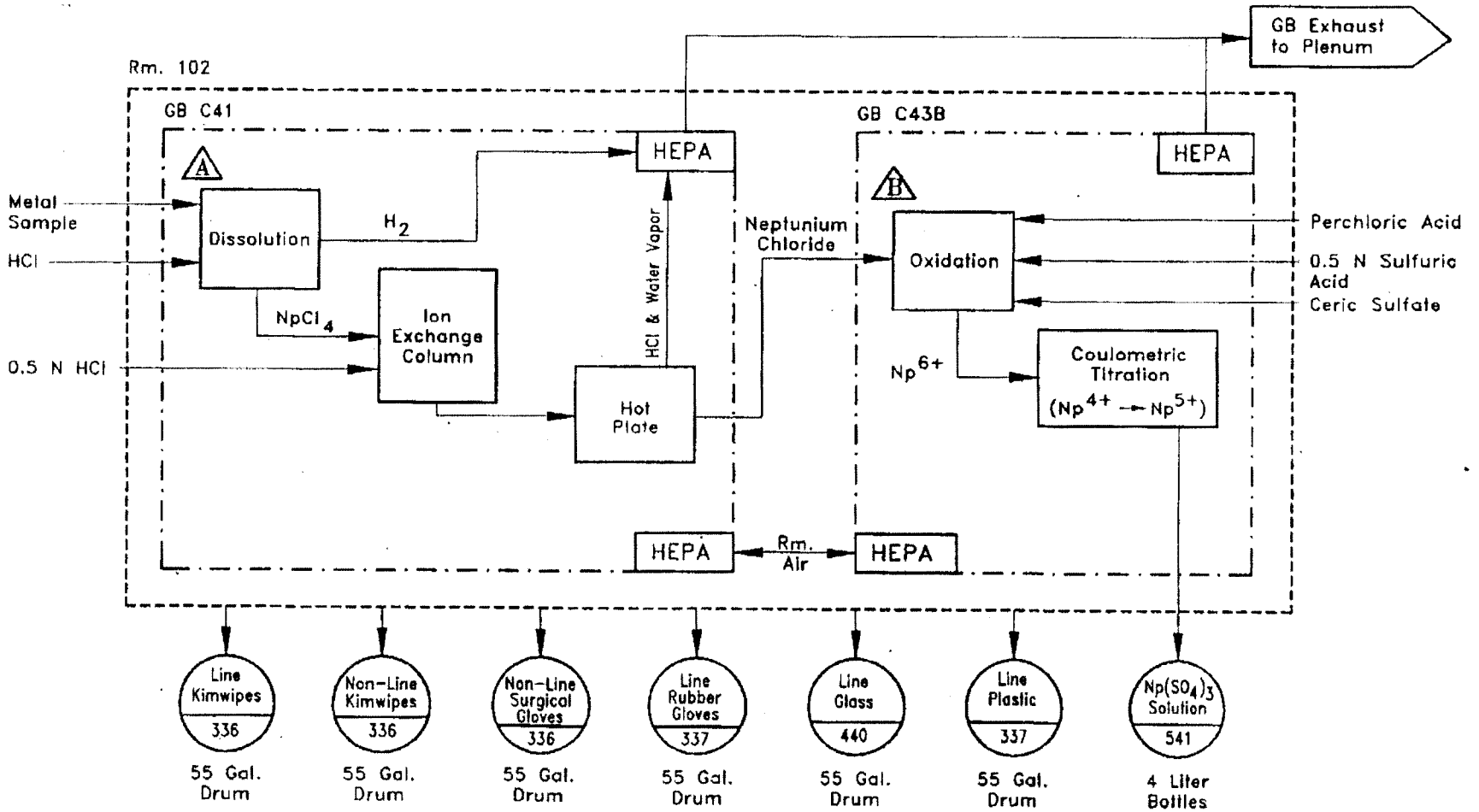

FIGURE 17.1

Rocky Flats Plant Waste Stream & Residue Identification & Characterization	BUILDING 559/PROCESS 17 COULOMETRIC TITRATION (NEPTUNIUM ANALYSIS)			
		Task	By	Date
		Designed	F. Kabat/J. Kleckner	6/5/90
		Drawn	K. Tate	7/6/90
		Checked	R. Medlyn	8/7/90

AutoCAD 10, File Name: 1559-27e 2/6/91

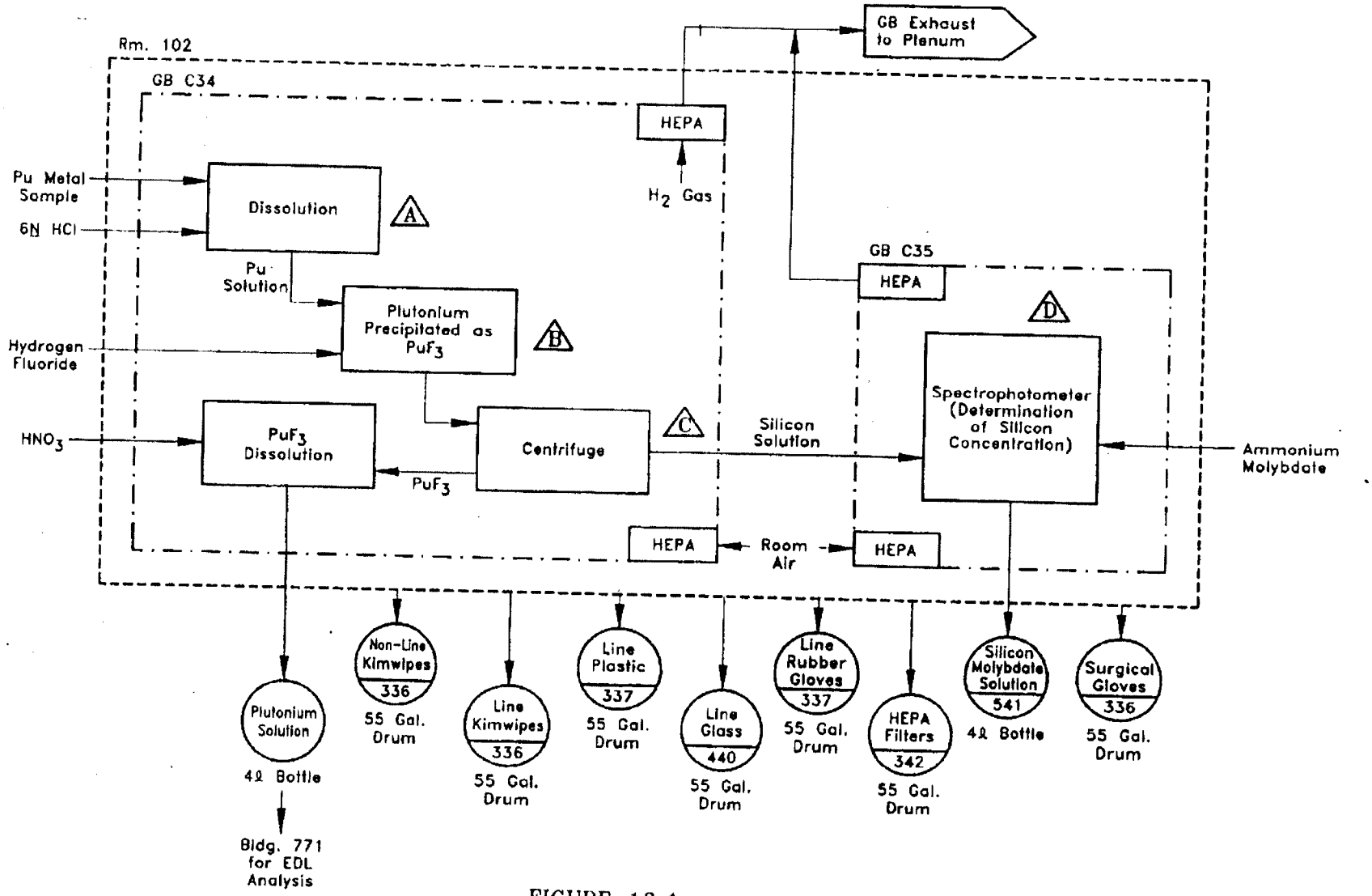

FIGURE 18.1

Rocky Flats Plant Waste Stream & Residue Identification & Characterization	BUILDING 559/PROCESS 18 IRON & SILICON ANALYSIS (SILICON)			
		Task	By	Date
		Designed	F. Kabot/J. Kleckner	5/30/90
		Drawn	C.K. Harrington	7/2/90
		Checked	R. Medlyn	8/7/90

AutoCAD 11, File Name: f559-29e 10/27/92

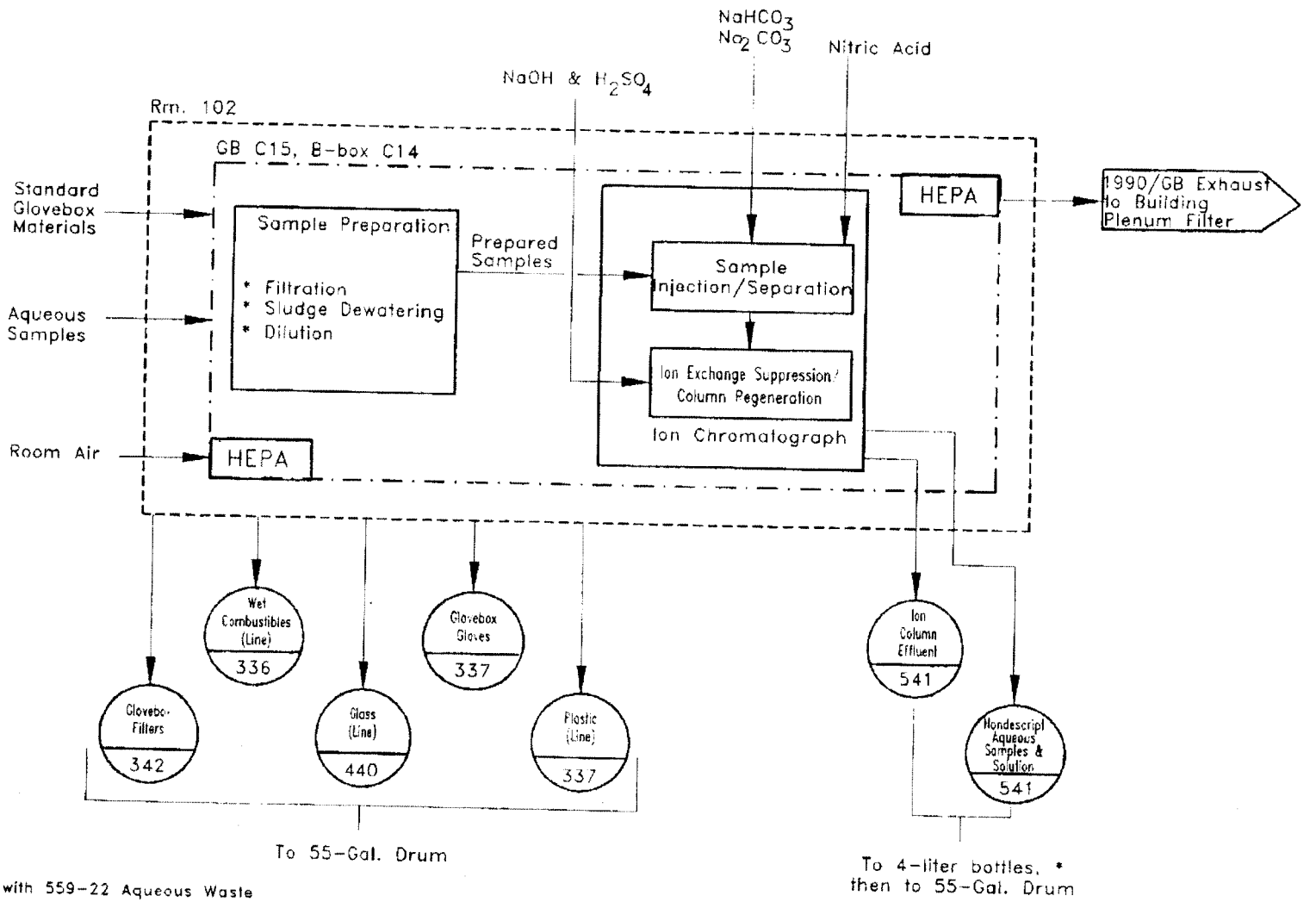

FIGURE 19.1

Rocky Flats Plant Waste Stream & Residue Identification & Characterization	BUILDING 559/PROCESS 19 NON-ROUTINE ION CHROMATOGRAPH	Task	By	Date
		Designed	F. Kabot/J. Kleckner	5/07/90
		Drawn	C.K.Harrington	8/02/90
		Checked	J. Paynter	10/27/92

AutoCAD 11, File Name: f559-30d 08/24/93

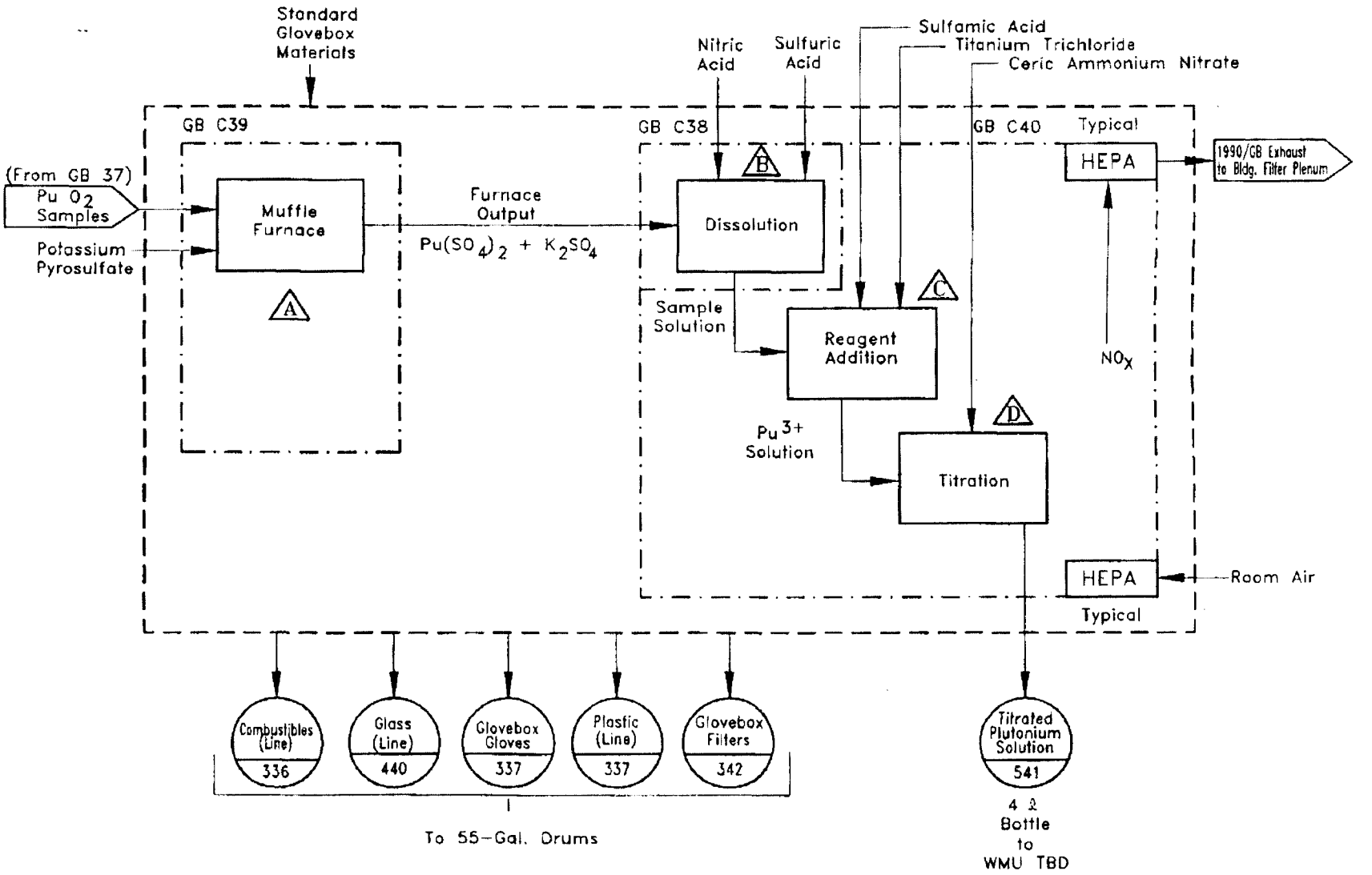

FIGURE 20.1

Rocky Flats Plant Waste Stream & Residue Identification & Characterization	BUILDING 559/PROCESS 20 NON-ROUTINE PLUTONIUM OXIDE ANALYSIS	Task	By	Date
		Designed	F. Kabat/J. Kleckner	05/24/90
		Drawn	C. Harrington	07/06/90
		Checked	B. Riddle	08/24/93

AutoCAD 11, File Name: f559-31d 11/11/92

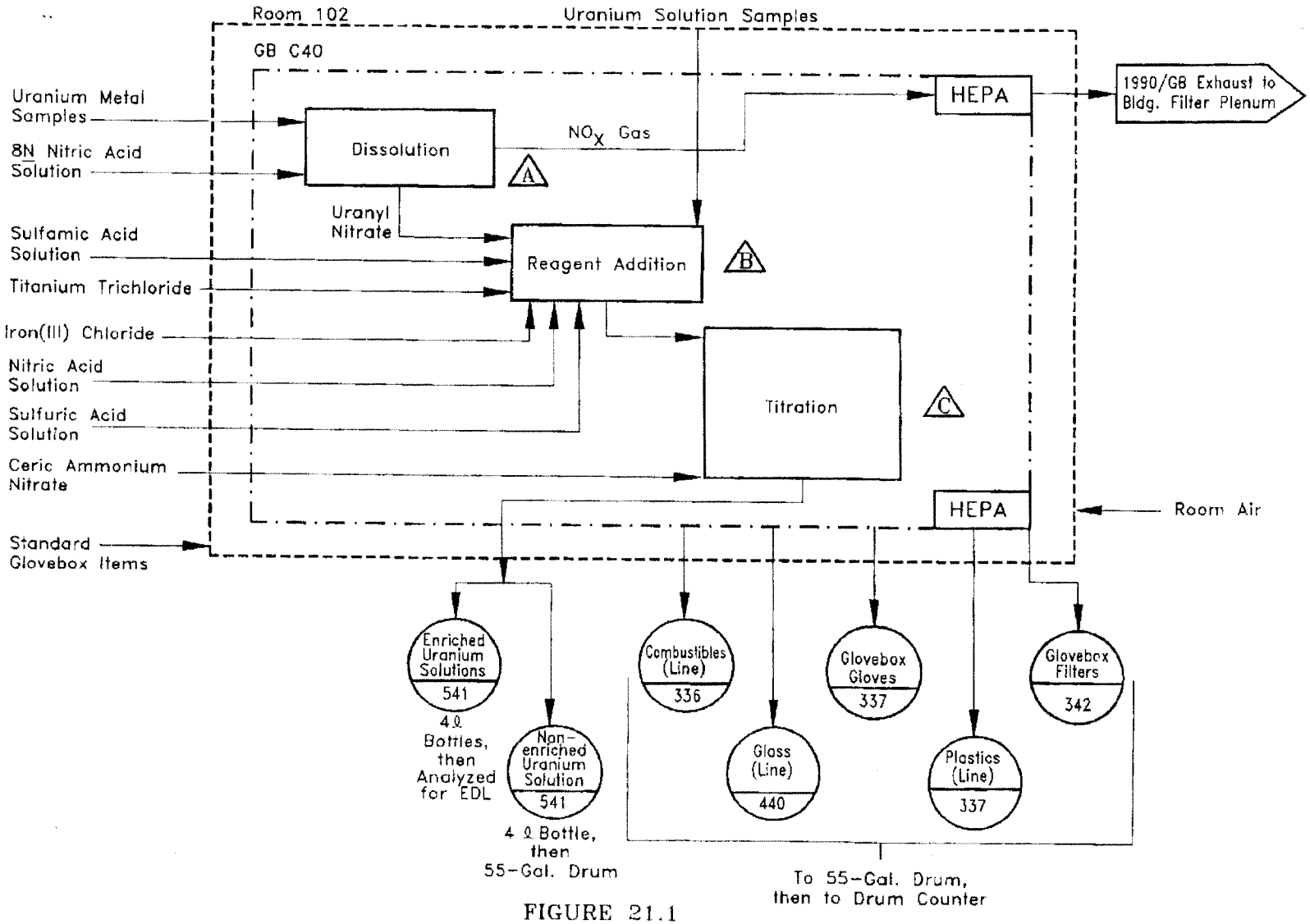

FIGURE 21.1

Rocky Flats Plant Waste Stream & Residue Identification & Characterization	BUILDING 559/PROCESS 21 NON-ROUTINE URANIUM ANALYSIS	Task	By	Date
		Designed	F. Kabot/J. Kleckner	5/23/90
		Drawn	J. Sikora	7/06/90
		Checked	J. Paynter	11/11/92

AutoCAD 10, File Name: f559-32e 2/6/91

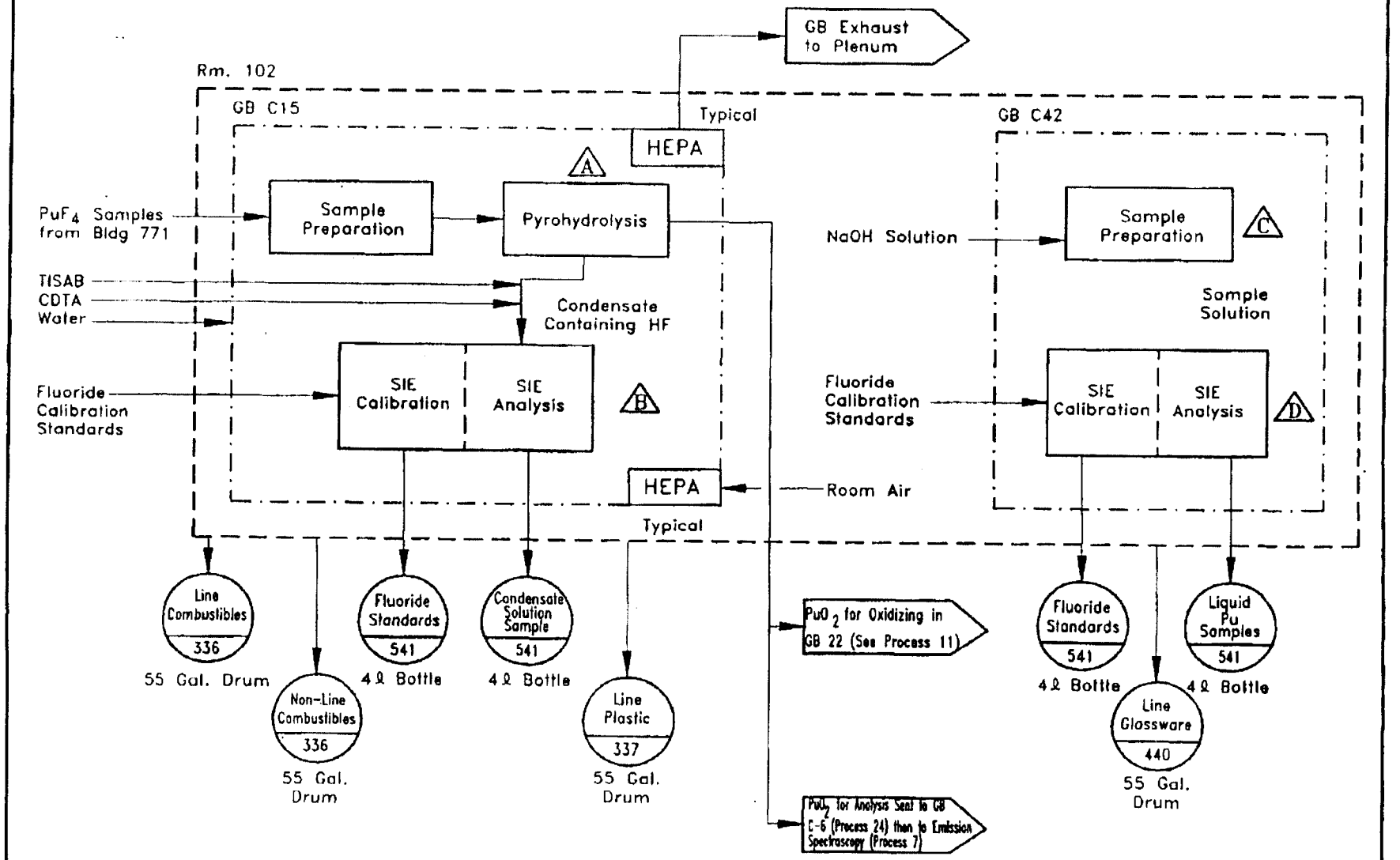

FIGURE 22.1

Rocky Flats Plant Waste Stream & Residue Identification & Characterization	BUILDING 559/PROCESS 22 SPECIFIC ION ELECTRODE ANALYSIS	Task	By	Date
		Designed	F. Kabot/J. Kleckner	5/8/90
		Drawn	J. Sikora	8/2/90
		Checked	R. Medlyn	8/7/90

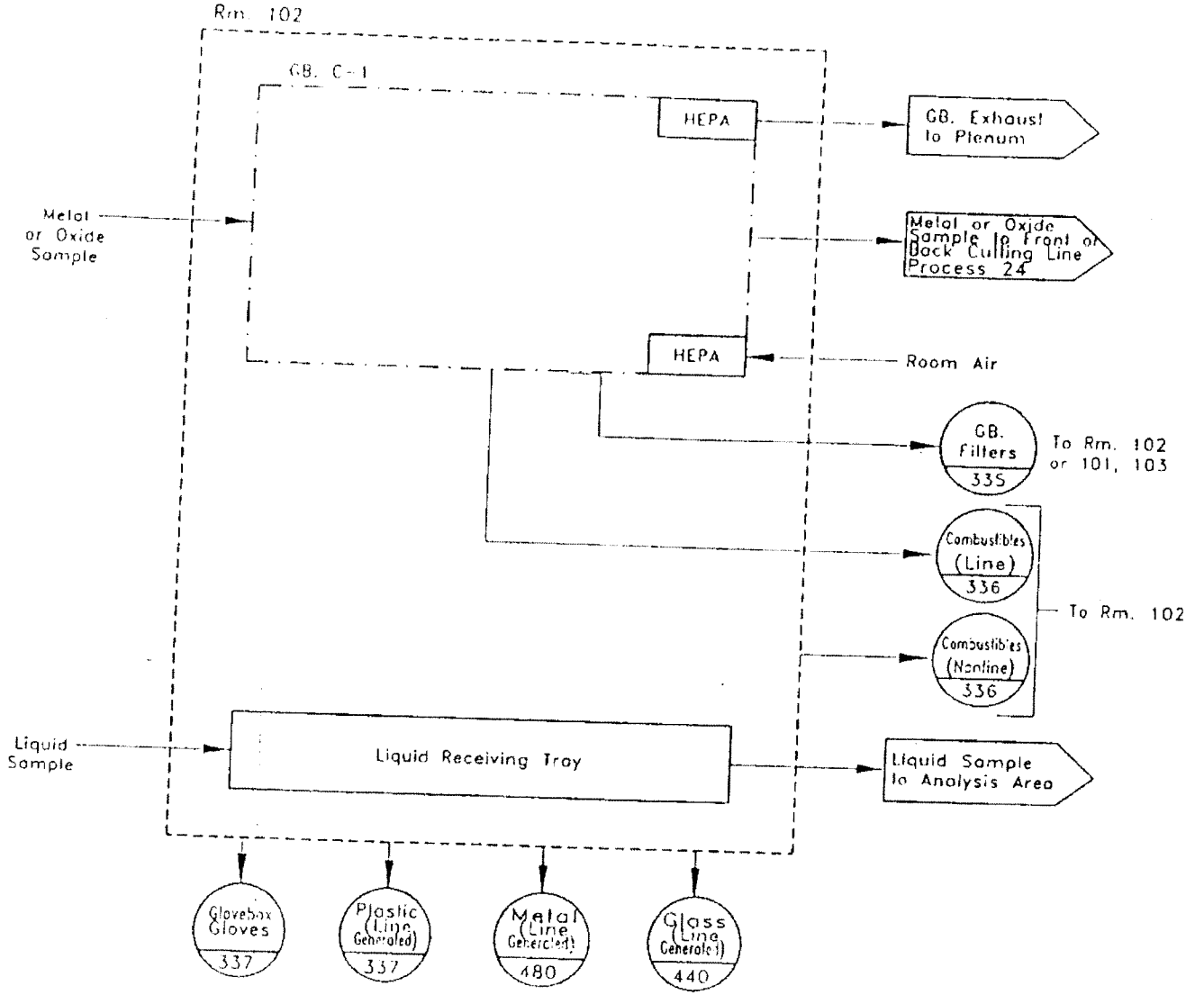

FIGURE 23.1

Rocky Flats Plant Waste Stream & Residue Identification & Characterization	BUILDING 559/PROCESS 23 SAMPLE RECEIVING FLOW DIAGRAM	Task	By	Date
		Designed	D. Gelston	5/14/90
		Drawn	C.K. Harrington	6/28/90
		Checked	B. Peterson	9/23/91

AutoCAD 11, File Name: f559-2c 9/24/91

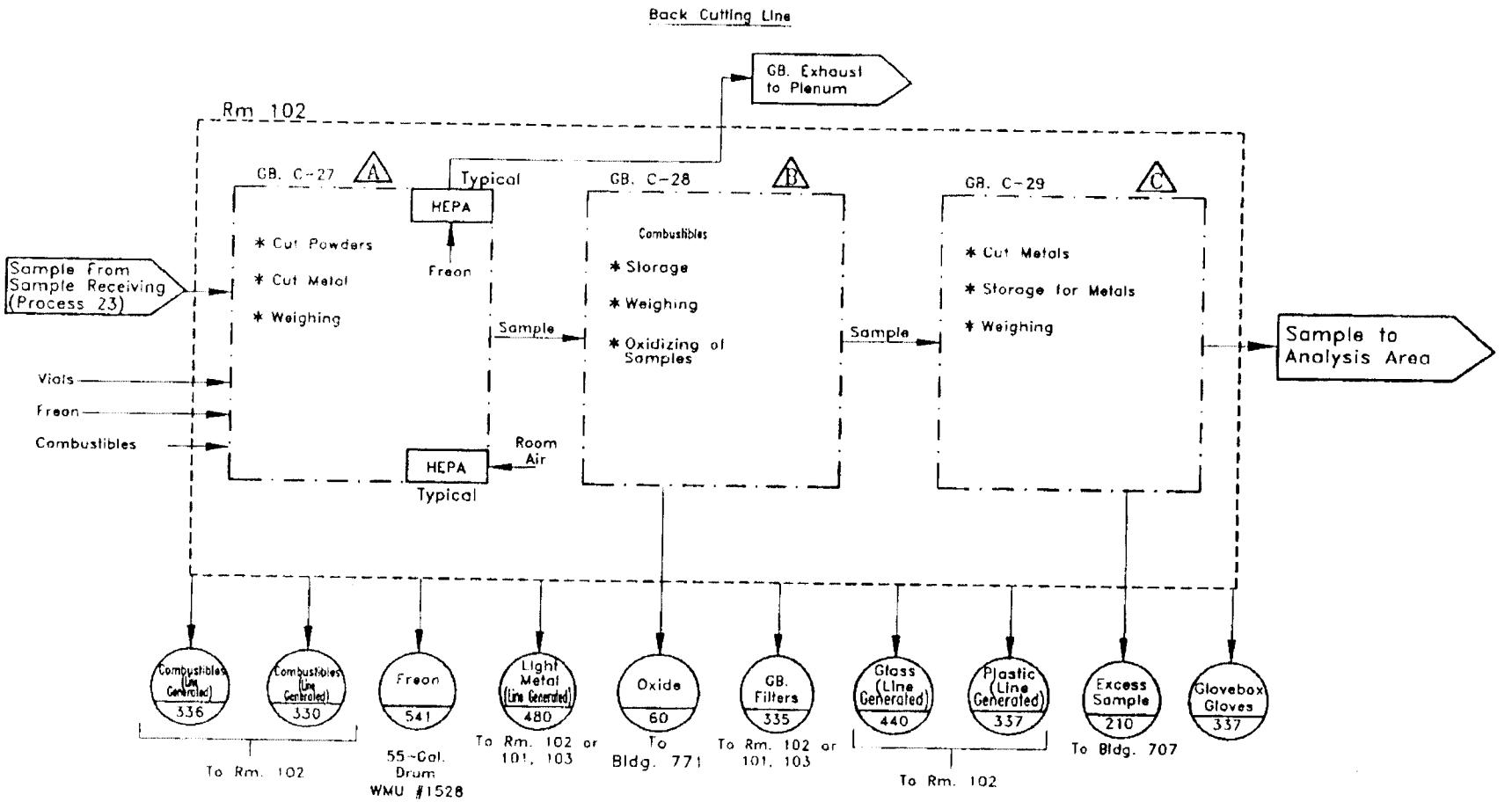

FIGURE 24.2

Rocky Flats Plant Waste Stream & Residue Identification & Characterization	BUILDING 559/PROCESS 24 SAMPLE CUTTING (BACK LINE)	Task	By	Date
		Designed	D. Gelston	5/10/90
		Drawn	C.B. Grilli	6/26/90
		Checked	B. Peterson	9/23/91

AutoCAD 11, File Name: 1559-33d 9/24/91

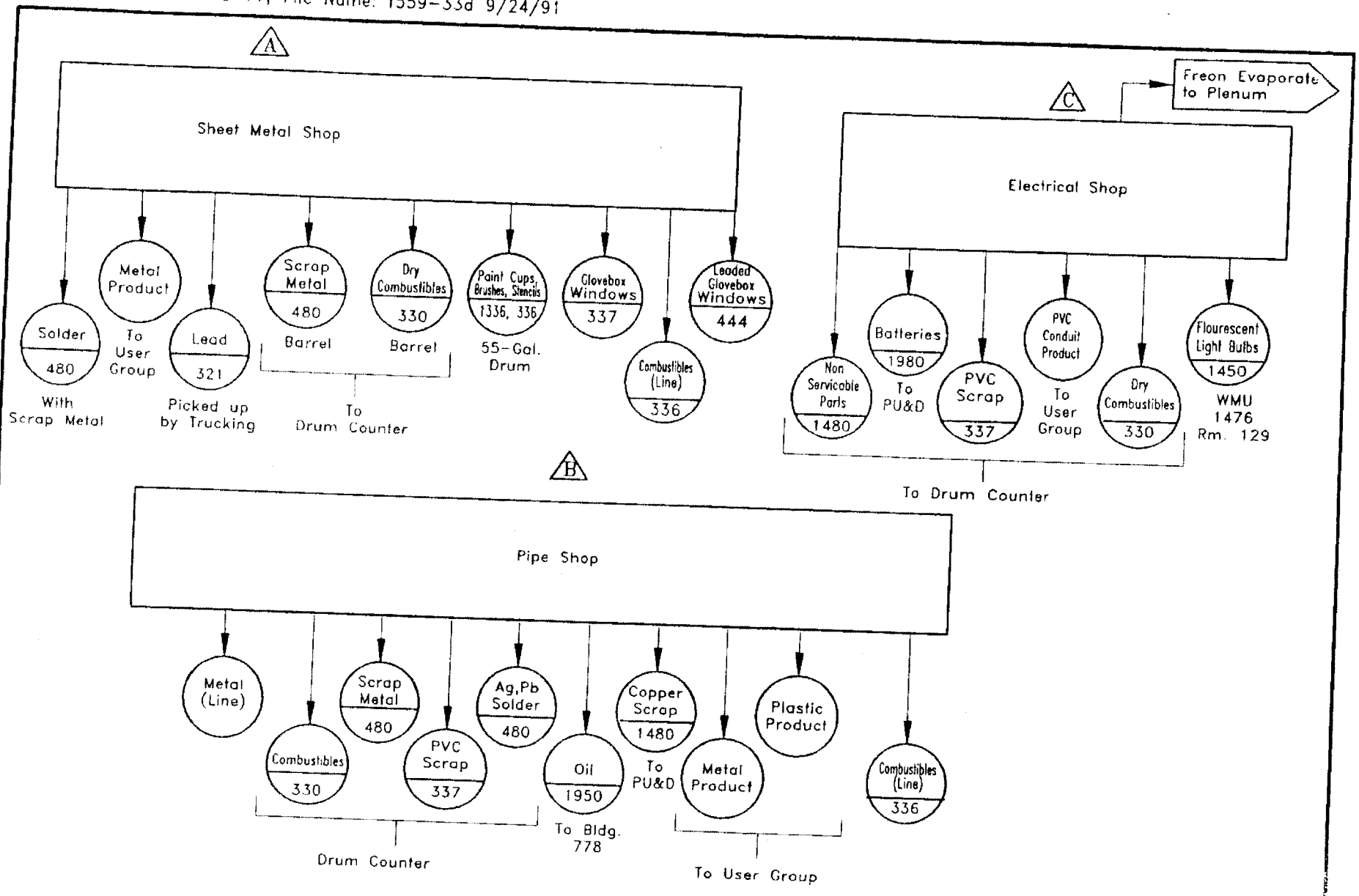

FIGURE 25.1

Rocky Flats Plant Waste Stream & Residue Identification & Characterization	BUILDING 559/PROCESS 25 MAINTENANCE	

Task	By	Date
Designed	D. Gelston	5/29/90
Drawn	C. Harrington	7/3/90
Checked	B. Peterson	9/23/91

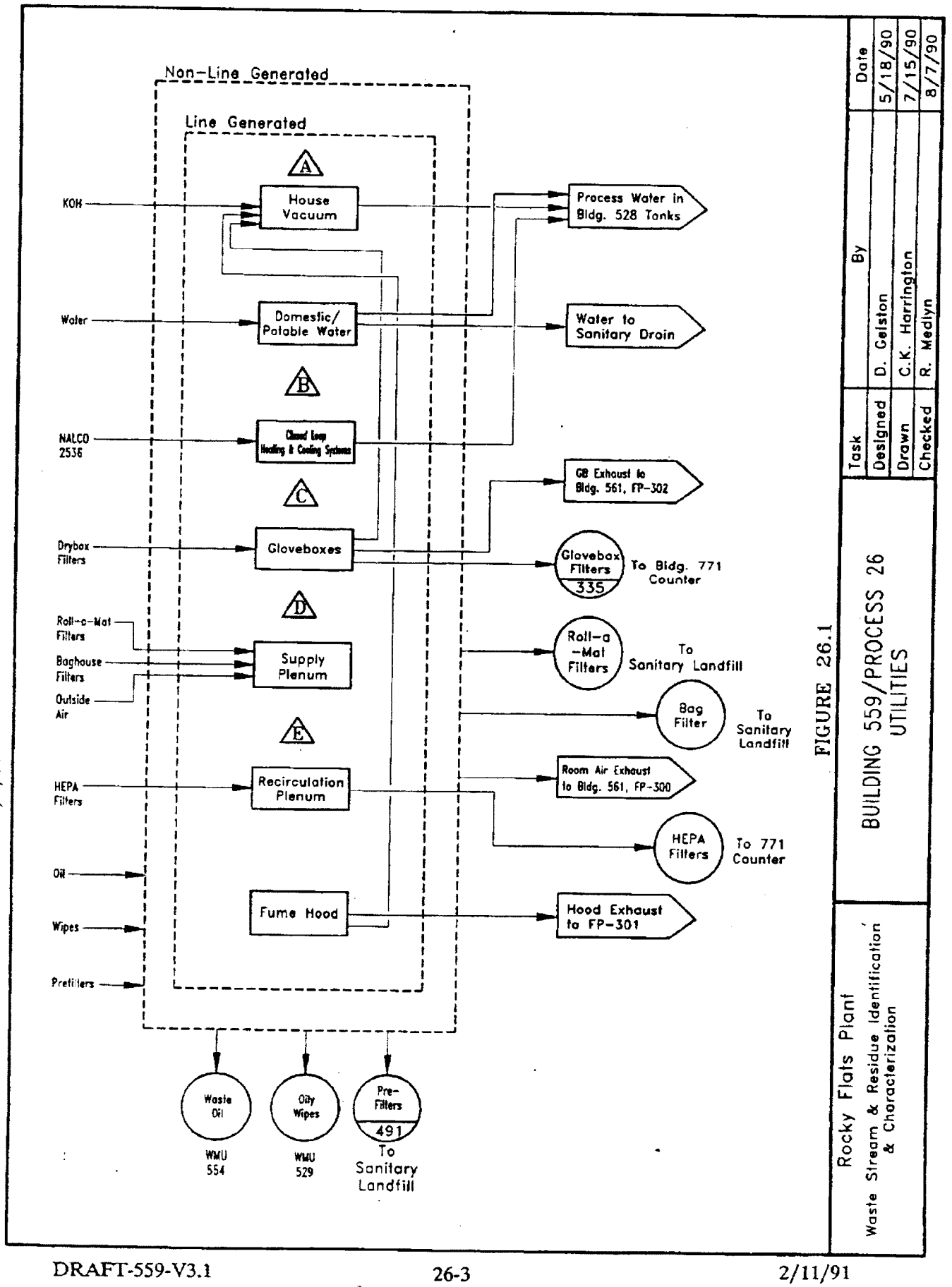
Non-Line Generated
Line Generated
A
KOH
House Vacuum
Process Water in Bldg. 528 Tanks
Water
Domestic/ Potable Water
Water to Sanitary Drain
B
NALCO 2536
Closed Loop Heating & Cooling Systems
C
GB Exhaust to Bldg. 561, FP-302
Drybox Filters
Gloveboxes
Glovebox Filters
335
To Bldg. 771 Counter
D
Roll-o-Mat Filters
Baghouse Filters
Outside Air
Supply Plenum
Roll-o-Mat Filters
To Sanitary Landfill
Bag Filter
To Sanitary Landfill
E
HEPA Filters
Recirculation Plenum
Room Air Exhaust to Bldg. 561, FP-300
HEPA Filters
To 771 Counter
Oil
Wipes
Prefilters
Fume Hood
Hood Exhaust to FP-301
Waste Oil
WMU 554
Oily Wipes
WMU 529
Pre-Filters
491
To Sanitary Landfill
Task
By
Date
Designed
D. Gelston
5/18/90
Drawn
C.K. Harrington
7/15/90
Checked
R. Medlyn
8/7/90
FIGURE 26.1
BUILDING 559/PROCESS 26 UTILITIES
Rocky Flats Plant
Waste Stream & Residue Identification & Characterization
AutoCAD 10, File Name: 1559-34f 2/6/91

AutoCAD 11, File Name: f559-35d 9/18/91

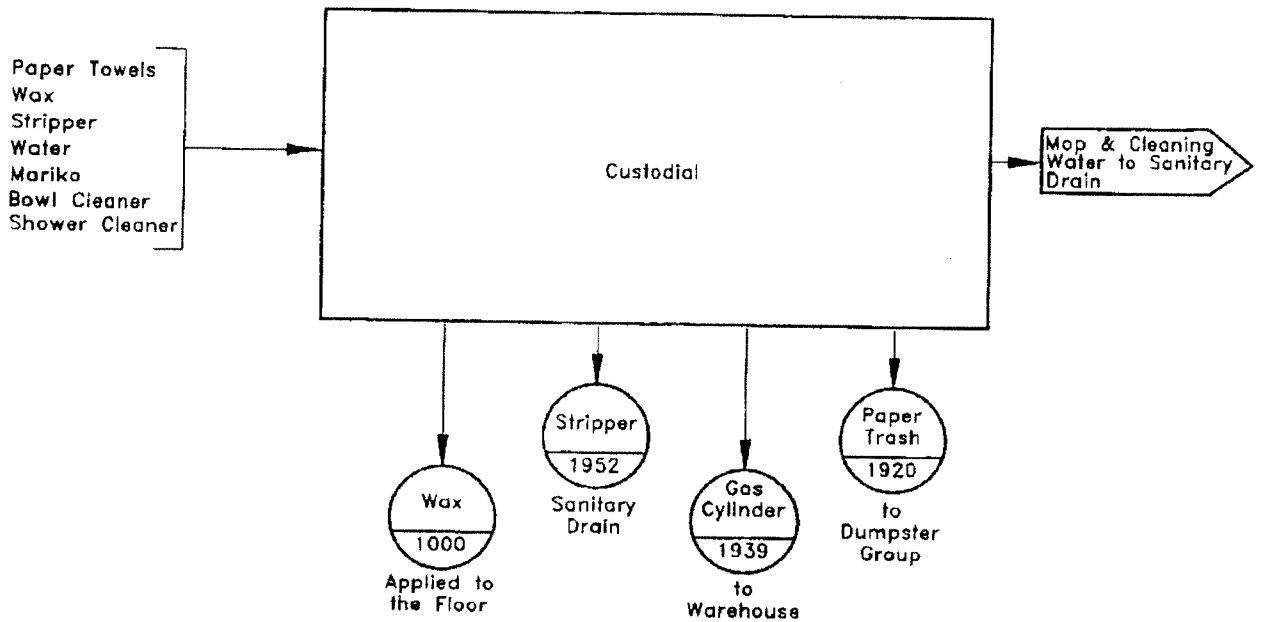

FIGURE 27.1

Rocky Flats Plant Waste Stream & Residue Identification & Characterization	BUILDING 559/PROCESS 27 CUSTODIAL	Task	By	Date
		Designed	D. Gelston	5/16/90
		Drawn	C. Harrington	7/3/90
		Checked	S. Muse	9/6/91

AutoCAD 10, File Name: f559-9d 2/11/91

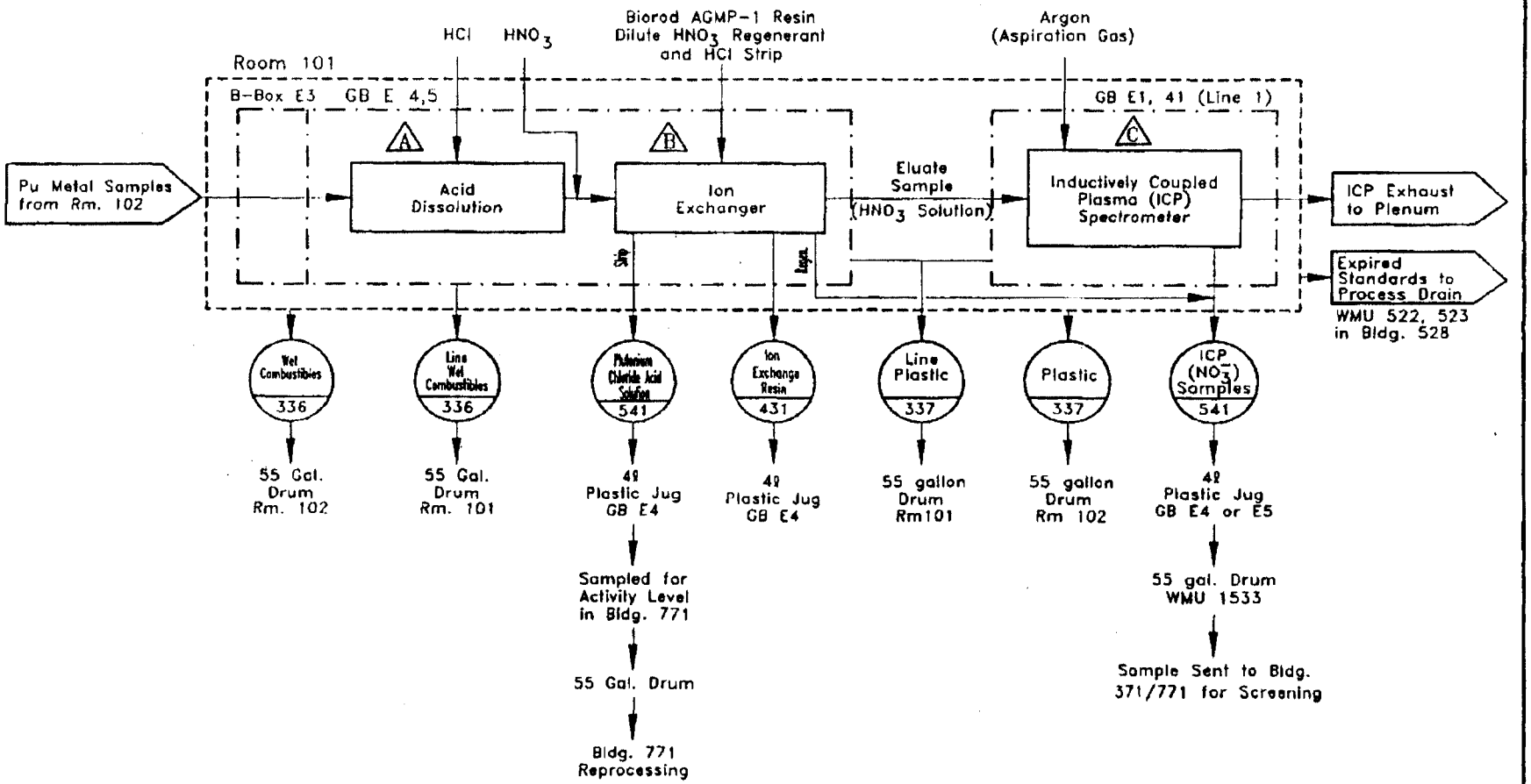

FIGURE 28.1

Rocky Flats Plant Waste Stream & Residue Identification & Characterization	BUILDING 559 / PROCESS 28 ICP SPECTROSCOPY	Task	By	Date
		Designed	R. Medlyn	4/20/90
		Drawn	J.D Sikora	6/26/90
		Checked	R. Medlyn	1/28/91

AutoCAD 10, File Name: f559-62a 2/7/91

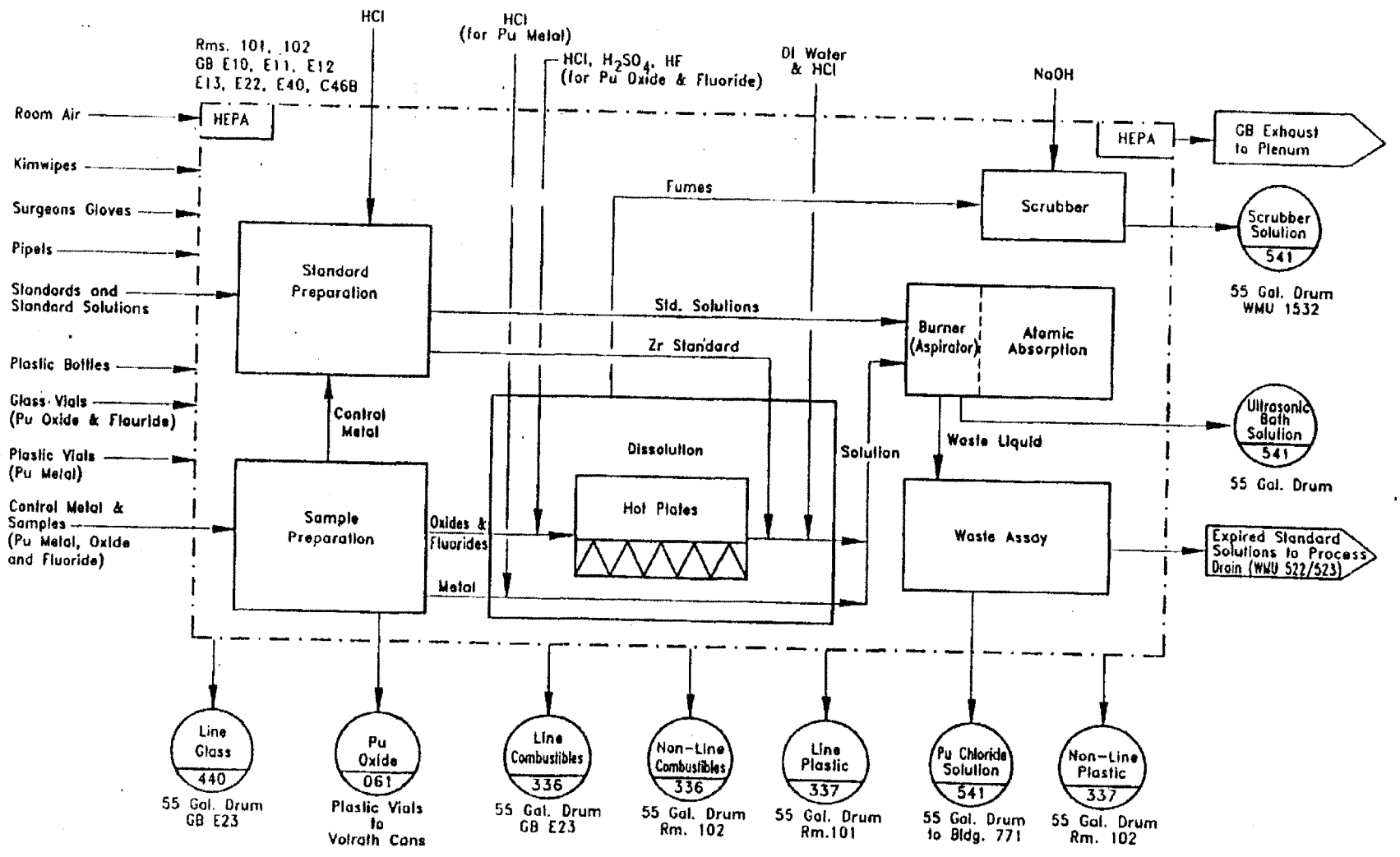

FIGURE 29.1

Rocky Flats Plant Waste Stream & Residue Identification & Characterization	BUILDING 559/PROCESS 29 ATOMIC ABSORPTION	Task	By	Date
		Designed	J. Kleckner	2/6/91
		Drawn	J. Kleckner	2/7/91
		Checked	R. Medlyn	2/7/91

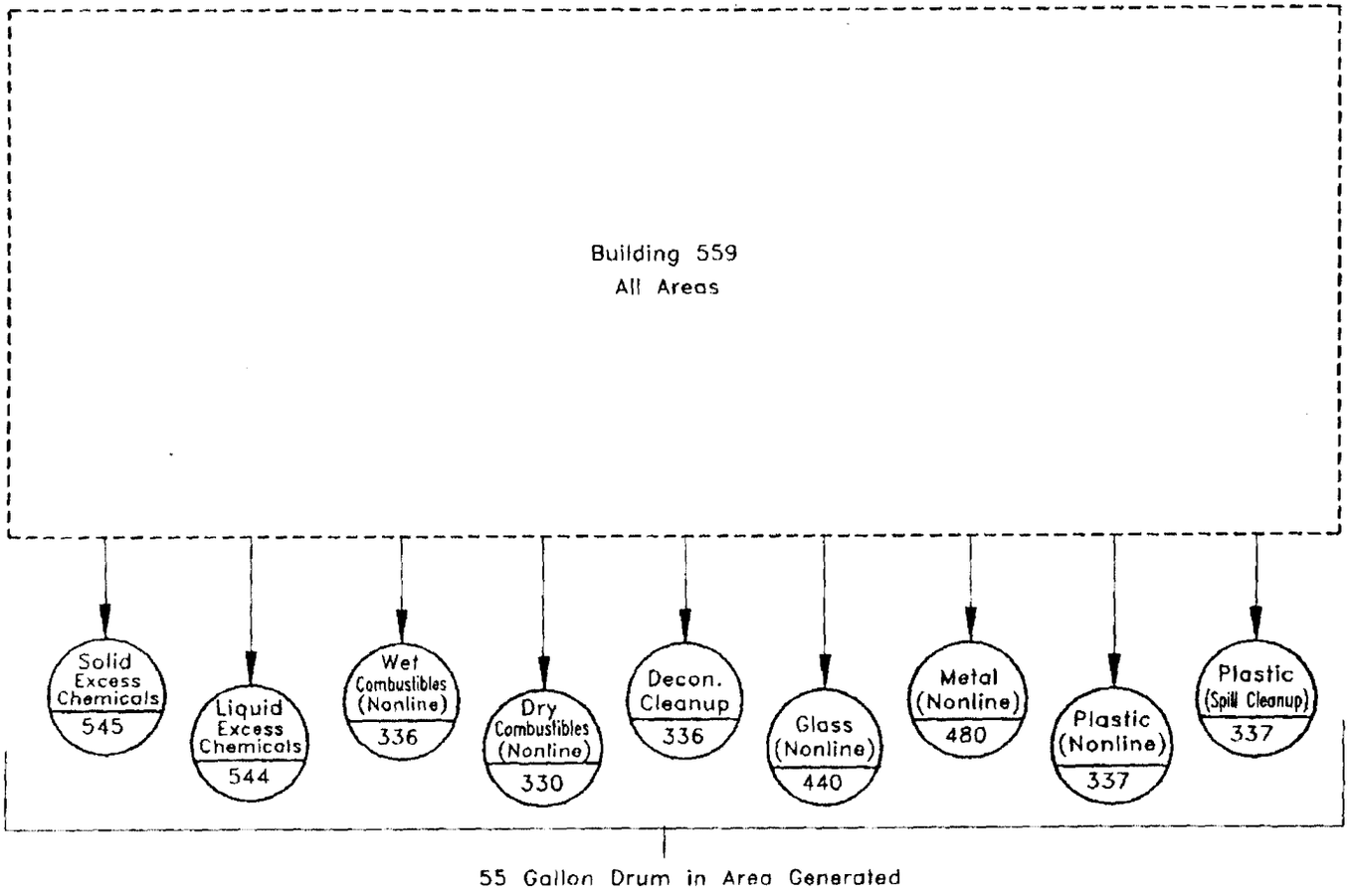

FIGURE 30.1

Rocky Flats Plant Waste Stream & Residue Identification & Characterization	BUILDING 559 / PROCESS 30 GENERAL WASTE	Task	By	Date
		Designed	B. Peterson	9/23/91
		Drawn	C. Lauber	9/25/91
		Checked	B. Peterson	9/25/91

AutoCAD 11, File Name: F559-34a 11/19/92

559-V3.2

Process 34-2

01/15/93

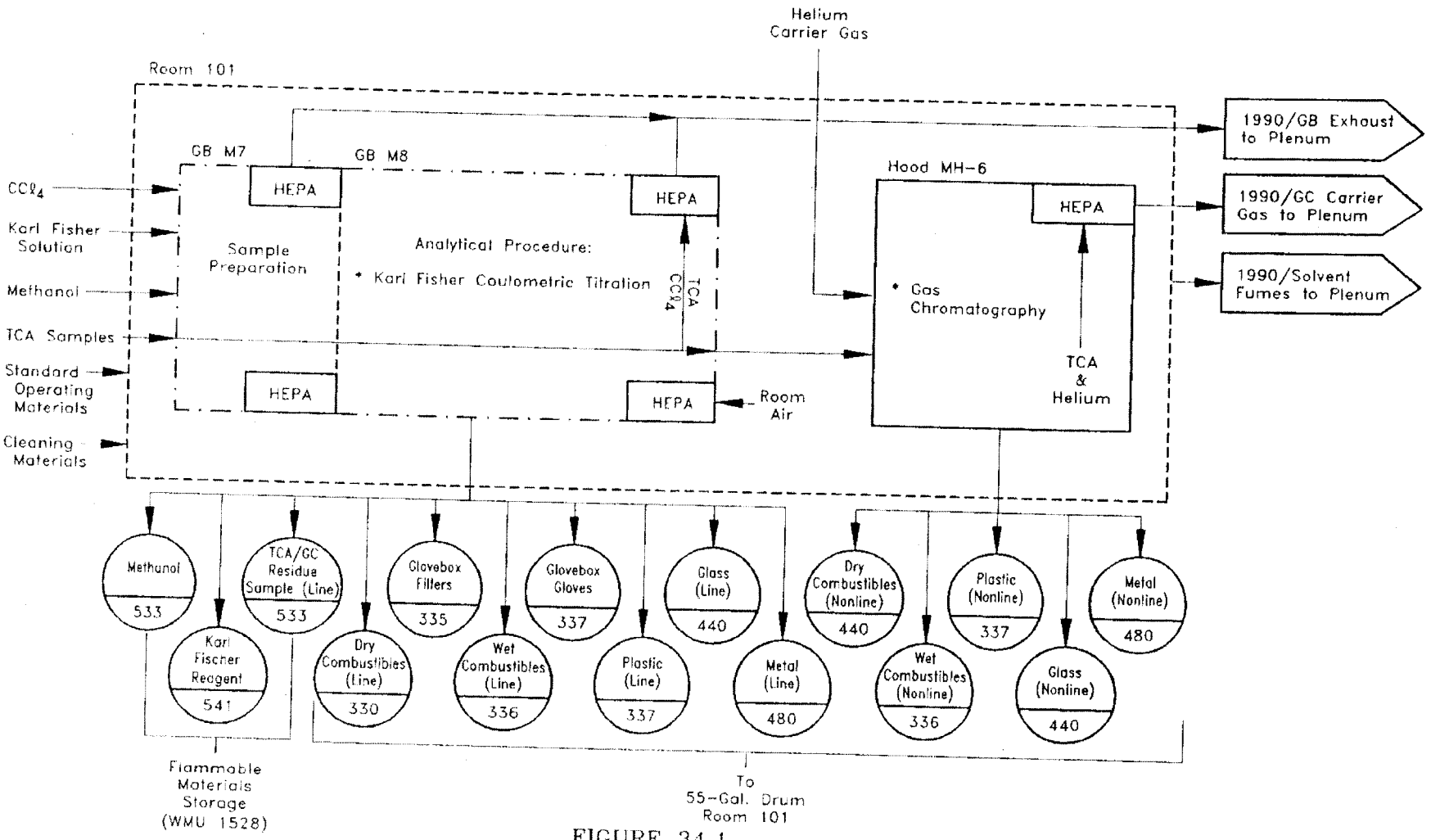

FIGURE 34.1

Rocky Flats Plant Waste Stream & Residue Identification & Characterization	BUILDING 559/PROCESS 34 GC ANALYSIS – PRODUCTION SUPPORT			
		Task	By	Date
		Designed	B. Riddle	10/27/92
		Drawn	C. Stadt	10/30/92
		Checked	B. Riddle	11/19/92

AutoCAD 11. File Name: F559-35a 01/07/93

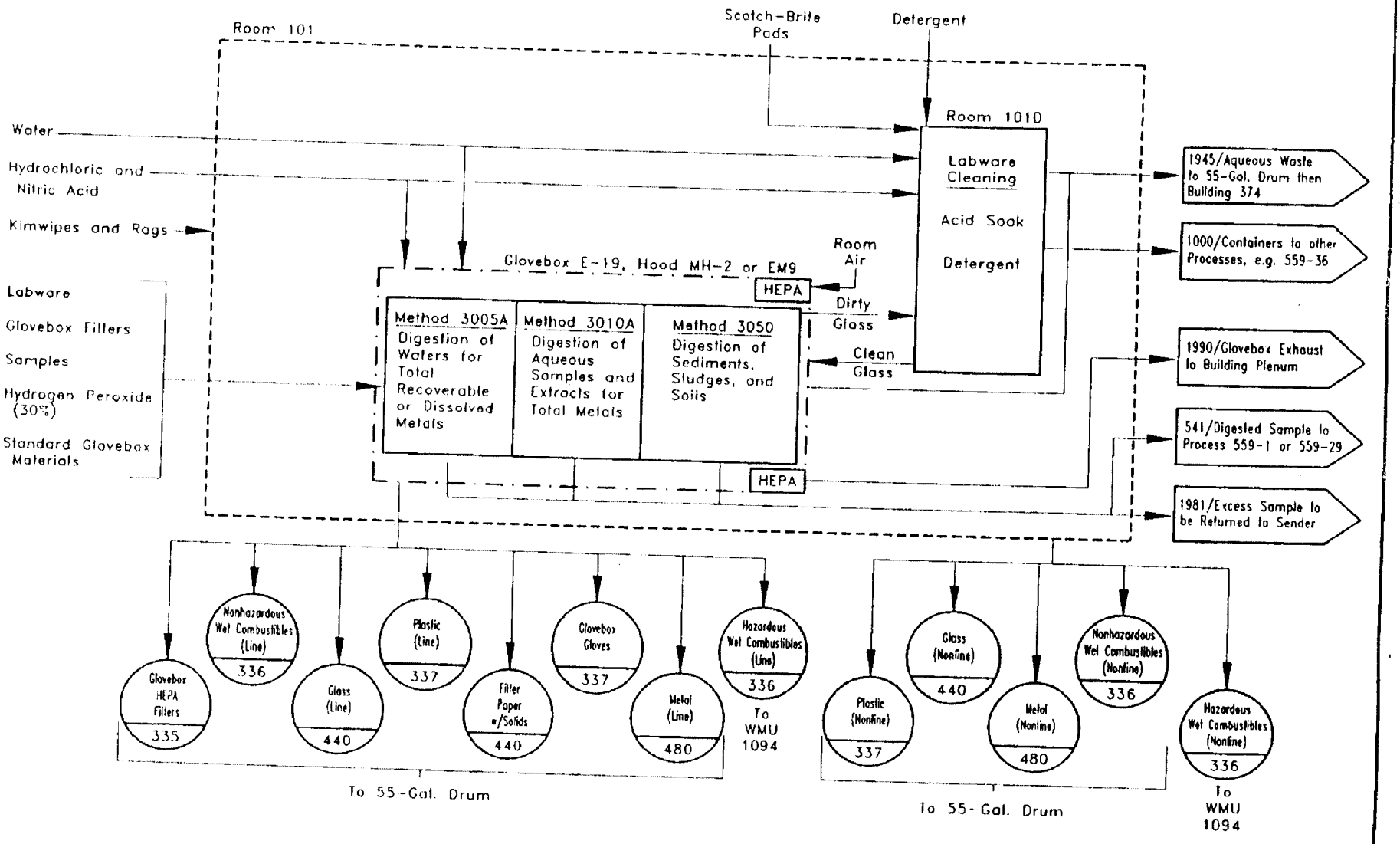

FIGURE 35.1

Rocky Flats Plant Waste Stream & Residue Identification & Characterization	BUILDING 559/PROCESS 35 TOTAL METALS DIGESTION	Task	By	Date
		Designed	J. Gutierrez	10/30/92
		Drawn	C. Stadt	11/02/92
		Checked	B. Riddle	01/07/93

AutoCAD 11. File Name: F559-36a 04/15/93

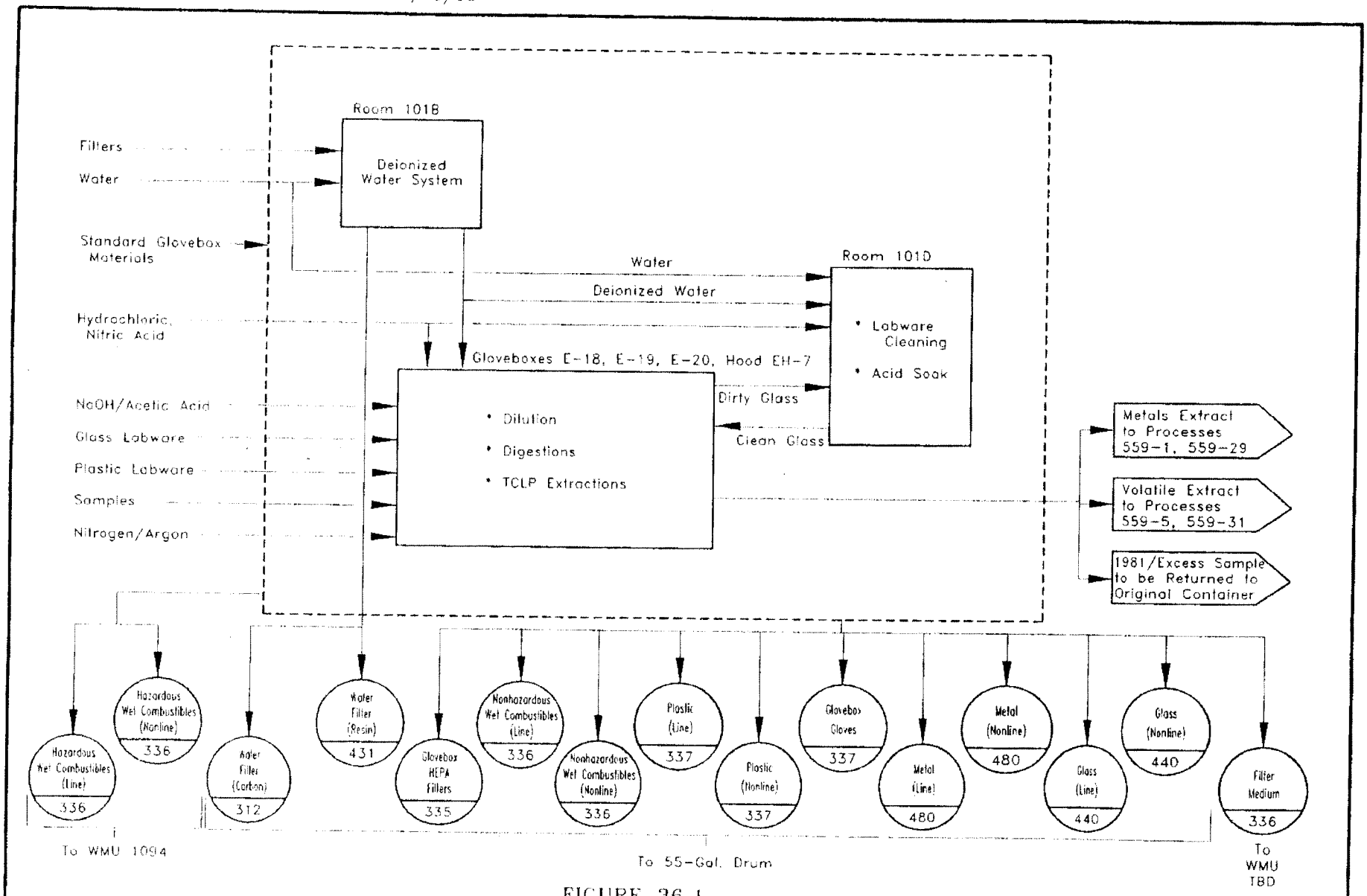

FIGURE 36.1

Rocky Flats Plant Waste Stream & Residue Identification & Characterization	BUILDING 559/PROCESS 36 TOXICITY CHARACTERISTIC LEACHING PROCEDURE			
		Task	By	Date
		Designed	J. Paynter	11/05/92
		Drawn	C. Stadt	11/09/92
		Checked	K. Tilton	04/15/93

AutoCAD 11. File Name: F559-37a 04/01/93

559-V3.2 Process 37-2 04/16/93

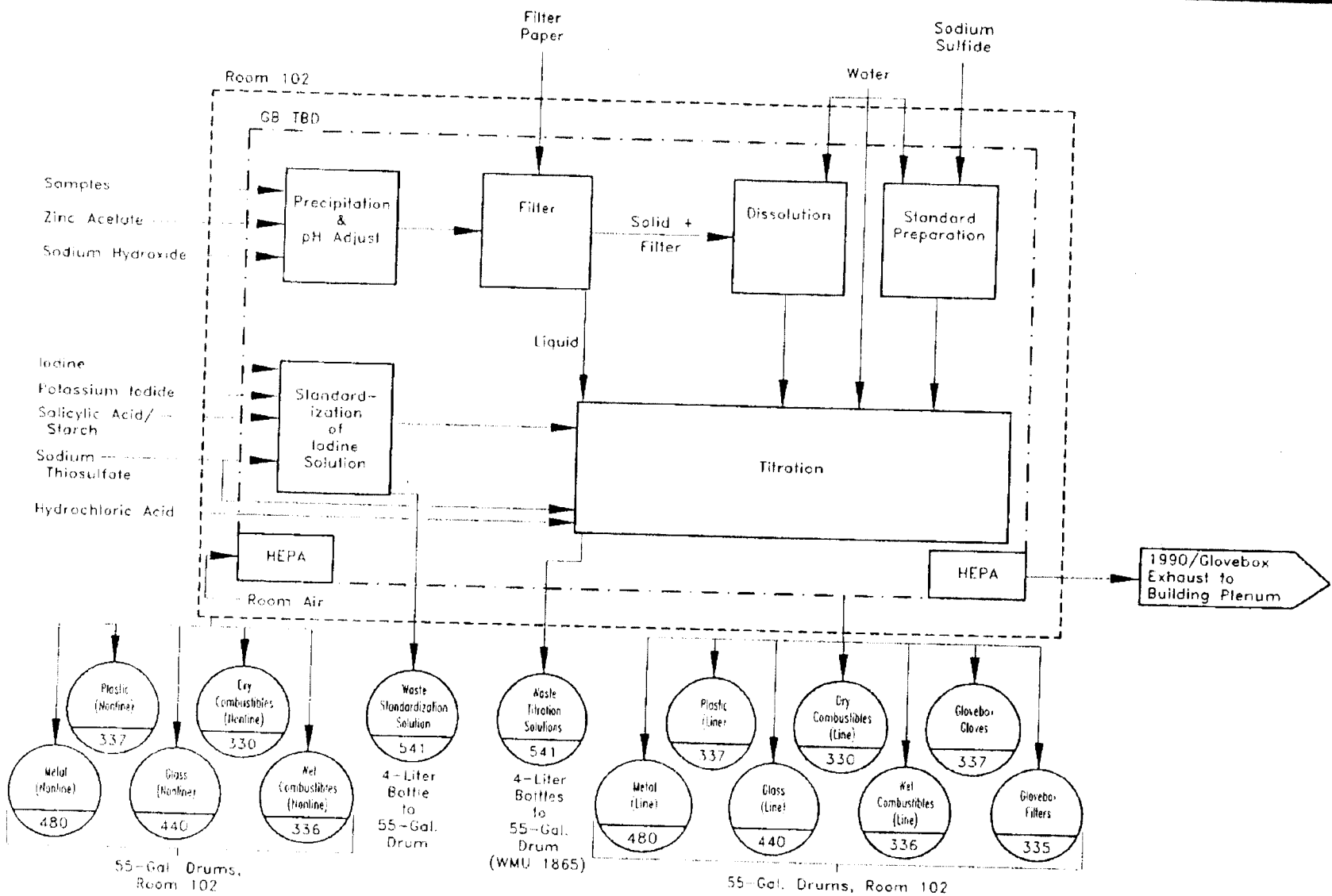

FIGURE 37.1

Rocky Flats Plant Waste Stream & Residue Identification & Characterization	BUILDING 559/PROCESS 37 ANALYSIS OF SULFIDES IN AQUEOUS SOLUTIONS	

Task	By	Date
Designed	B. Riddle	11/11/92
Drawn	C. Stadt	11/16/92
Checked	K. Tilton	04/01/93

AutoCAD 11, File Name: F559-38a 07/19/93

559-V3.2 Process 38-3 07/26/93

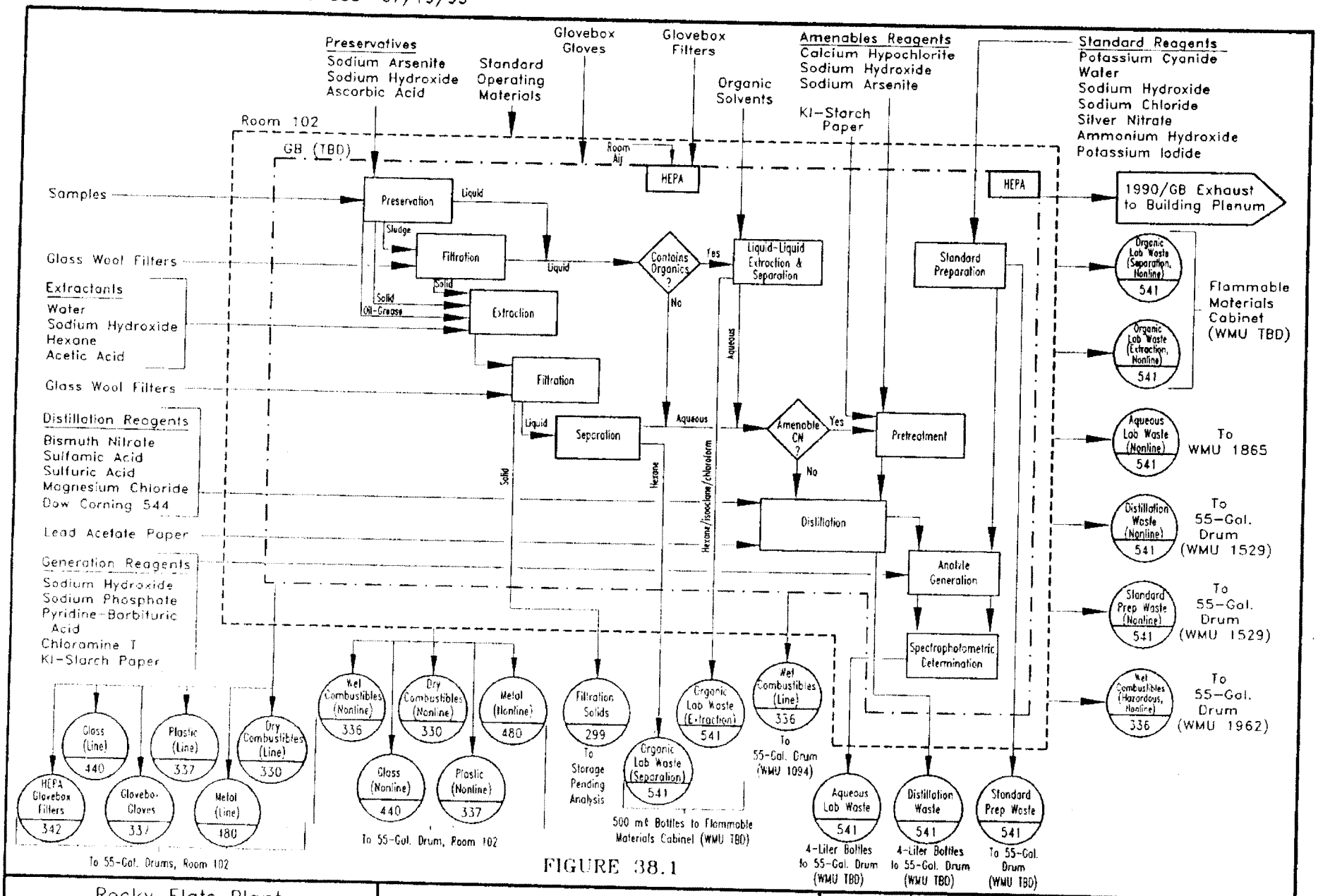

FIGURE 38.1

Rocky Flats Plant Waste Stream & Residue Identification & Characterization	BUILDING 559/PROCESS 38 TOTAL AND AMENABLE CYANIDE ANALYSIS			
		Task	By	Date
		Designed	B. Riddle	11/16/92
		Drawn	C. Stadt	11/18/92
		Checked	B. Riddle	07/19/93

AutoCAD 11, File Name: F559-39a 07/21/93

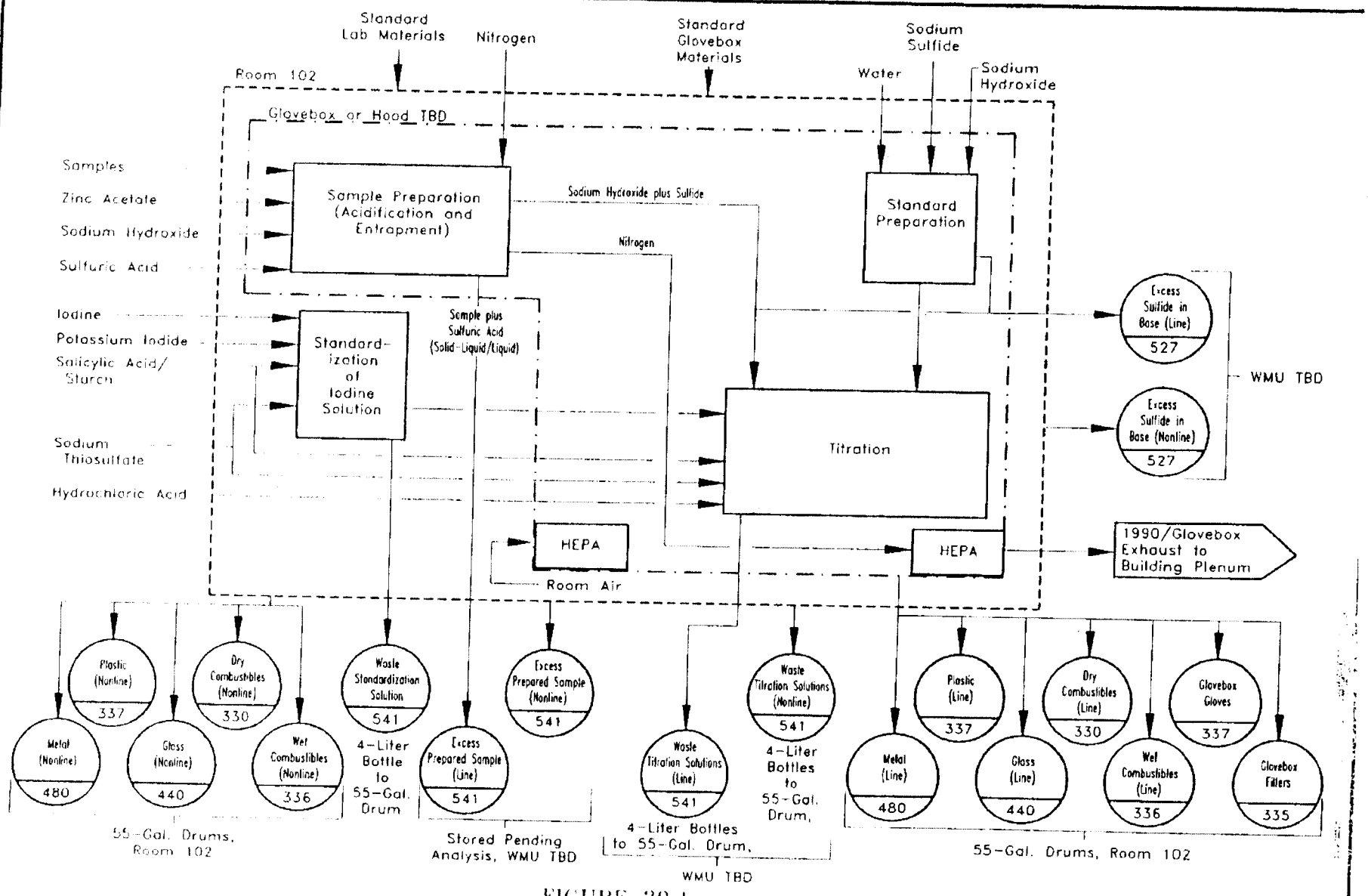

FIGURE 39.1

Rocky Flats Plant Waste Stream & Residue Identification & Characterization	BUILDING 559/PROCESS 39 ANALYSIS FOR REACTIVE SULFIDES (LINE OR NONLINE)			
		Task	By	Date
		Designed	B. Riddle	04/29/93
		Drawn	C. Stadt	05/03/93
		Checked	B. Riddle	07/21/93

AutoCAD 11, File Name: f559-40a 08/02/93

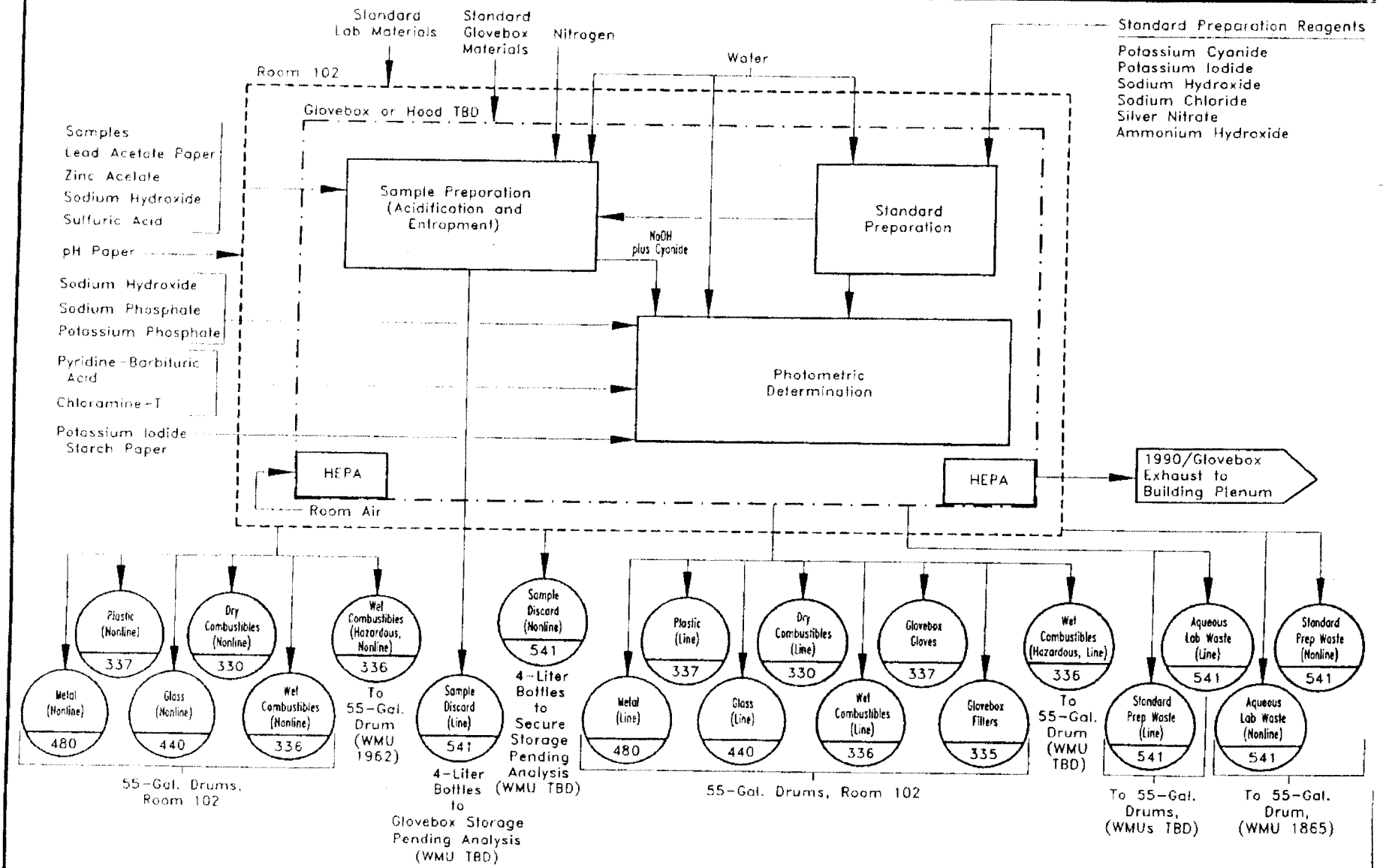

FIGURE 40.1

Rocky Flats Plant Waste Stream & Residue Identification & Characterization	BUILDING 559/PROCESS 40 ANALYSIS FOR REACTIVE CYANIDE (LINE OR NONLINE)	

Task	By	Date
Designed	B. Riddle	04/29/93
Drawn	C. Stadt	05/04/93
Checked	B. Riddle	08/02/93

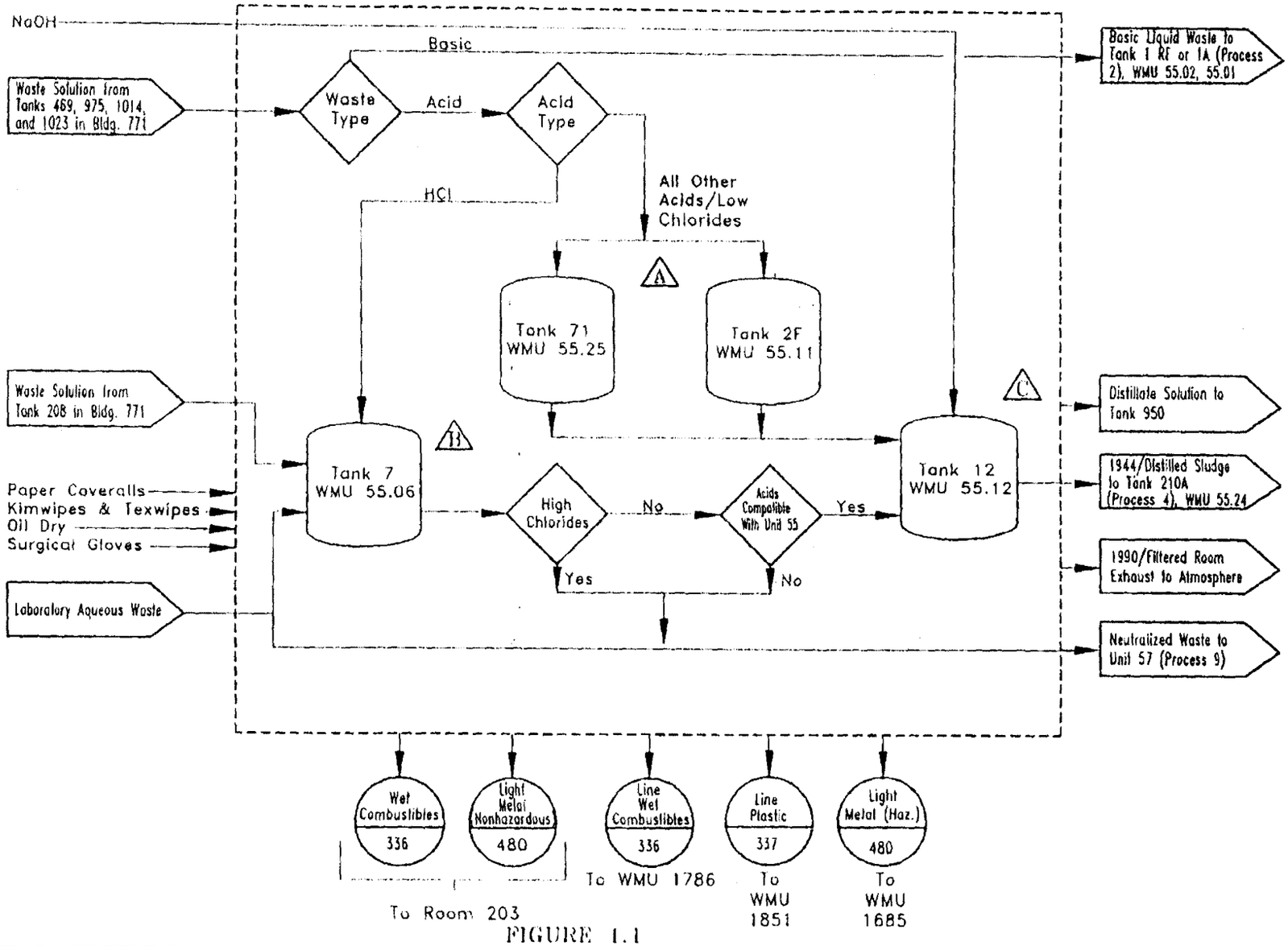

FIGURE 1.1

Rocky Flats Plant Waste Stream & Residue Identification & Characterization	BUILDING 774/PROCESS 1 NEUTRALIZATION	Task	By	Date
		Designed	C. Wood	4/23/90
		Drawn	G. Pauls	7/18/90
		Checked	J. Johnson	8/13/92

AutoCAD 11, File Name: f774-16d 11/05/92

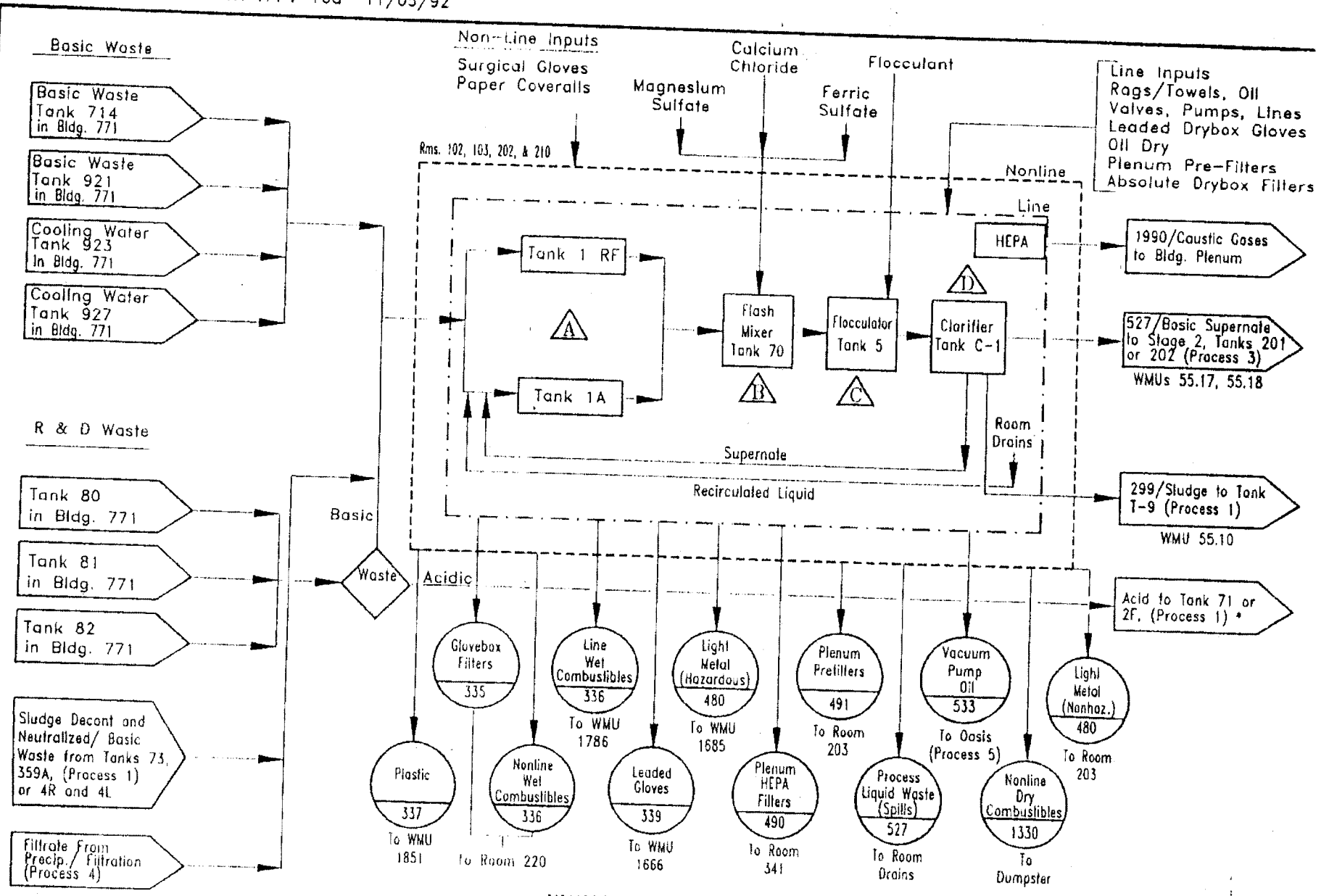

FIGURE 2.1

*Not an output of Process 2

Rocky Flats Plant
Waste Stream & Residue Identification & Characterization

BUILDING 774/PROCESS 2
BASIC LIQUID WASTE-STAGE 1

Task	By	Date
Designed	S. Baker	5/01/90
Drawn	C.B. Grilli	7/23/90
Checked	L. Johnson	8/20/92

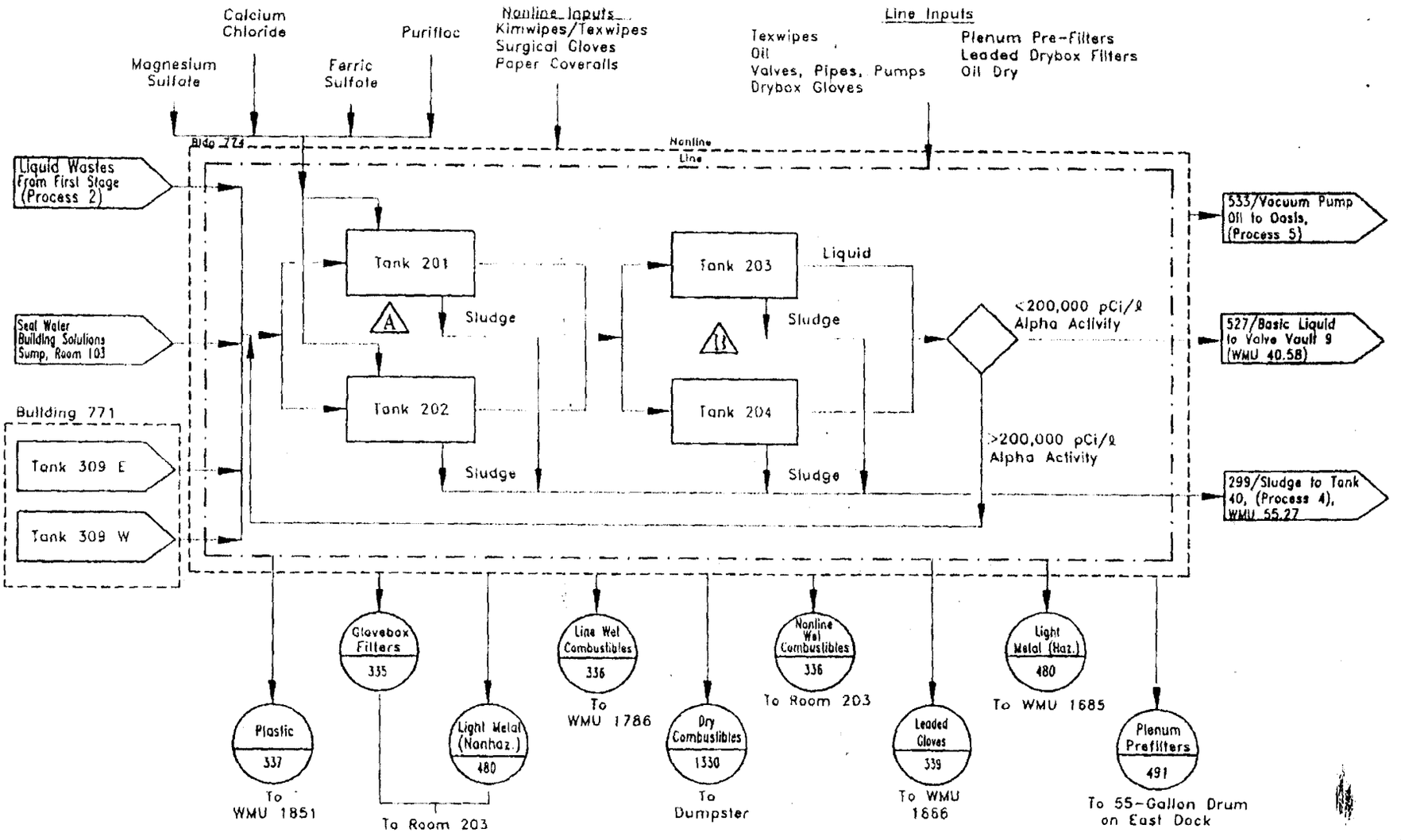

FIGURE 3.1

Rocky Flats Plant Waste Stream & Residue Identification & Characterization	BUILDING 774/PROCESS 3 BASIC LIQUID WASTE-SECOND STAGE	Task	By	Date
		Designed	S. Baker	5/04/90
		Drawn	C.B. Grilli	7/20/90
		Checked	W. Eakins	8/21/92

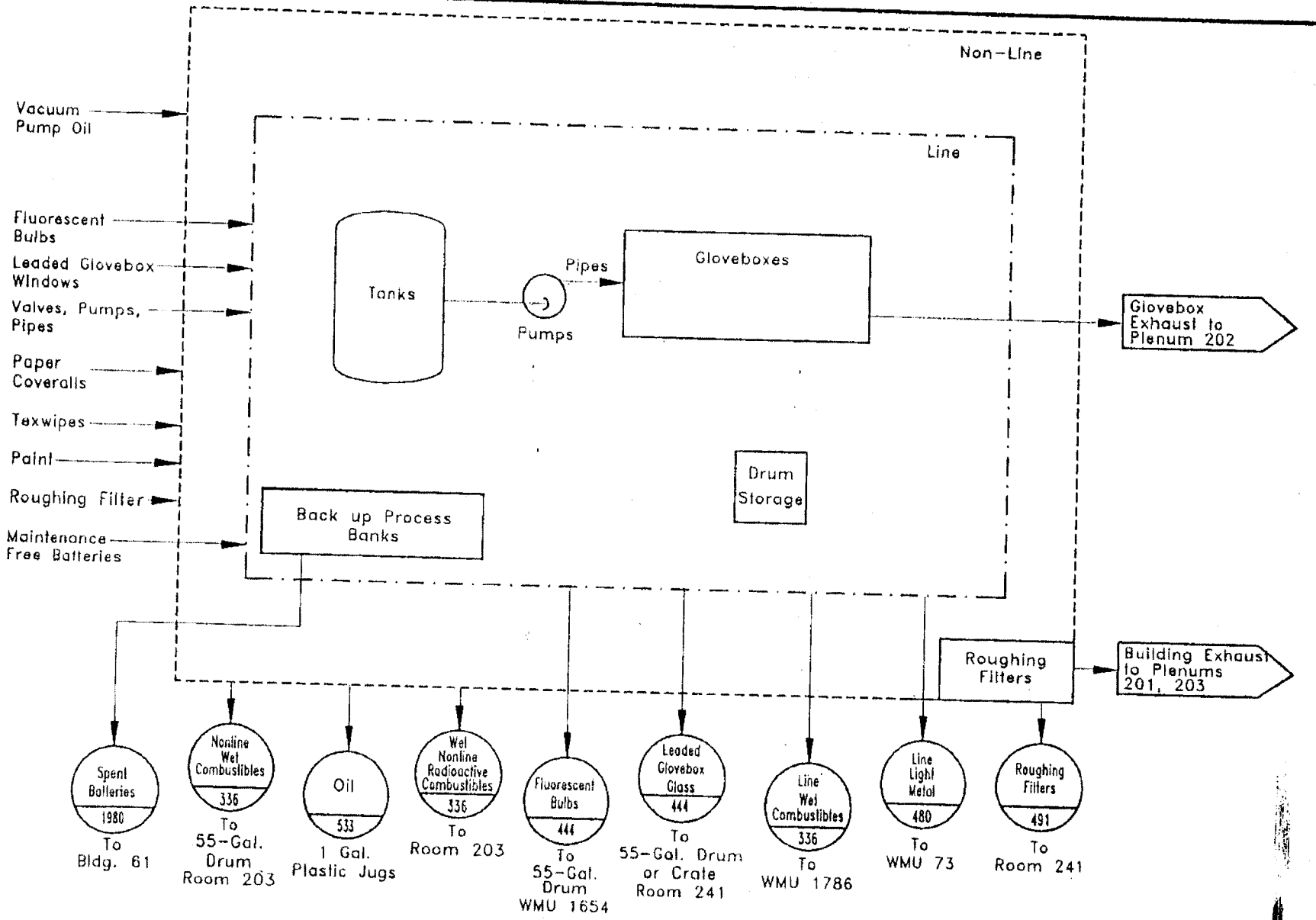

FIGURE 7.1

Rocky Flats Plant Waste Stream & Residue Identification & Characterization	BUILDING 774/PROCESS 7 BUILDING MAINTENANCE	Task / By / Date Designed: S. Baker: 5/[illegible]/90 Drawn: J.D. Sikora: 7/19/90 Checked: K. Tilton: 8/30/92

AutoCAD 11, File Name: f774-8a 11/04/92

774-V3.2

Process 8-2

11/05/92

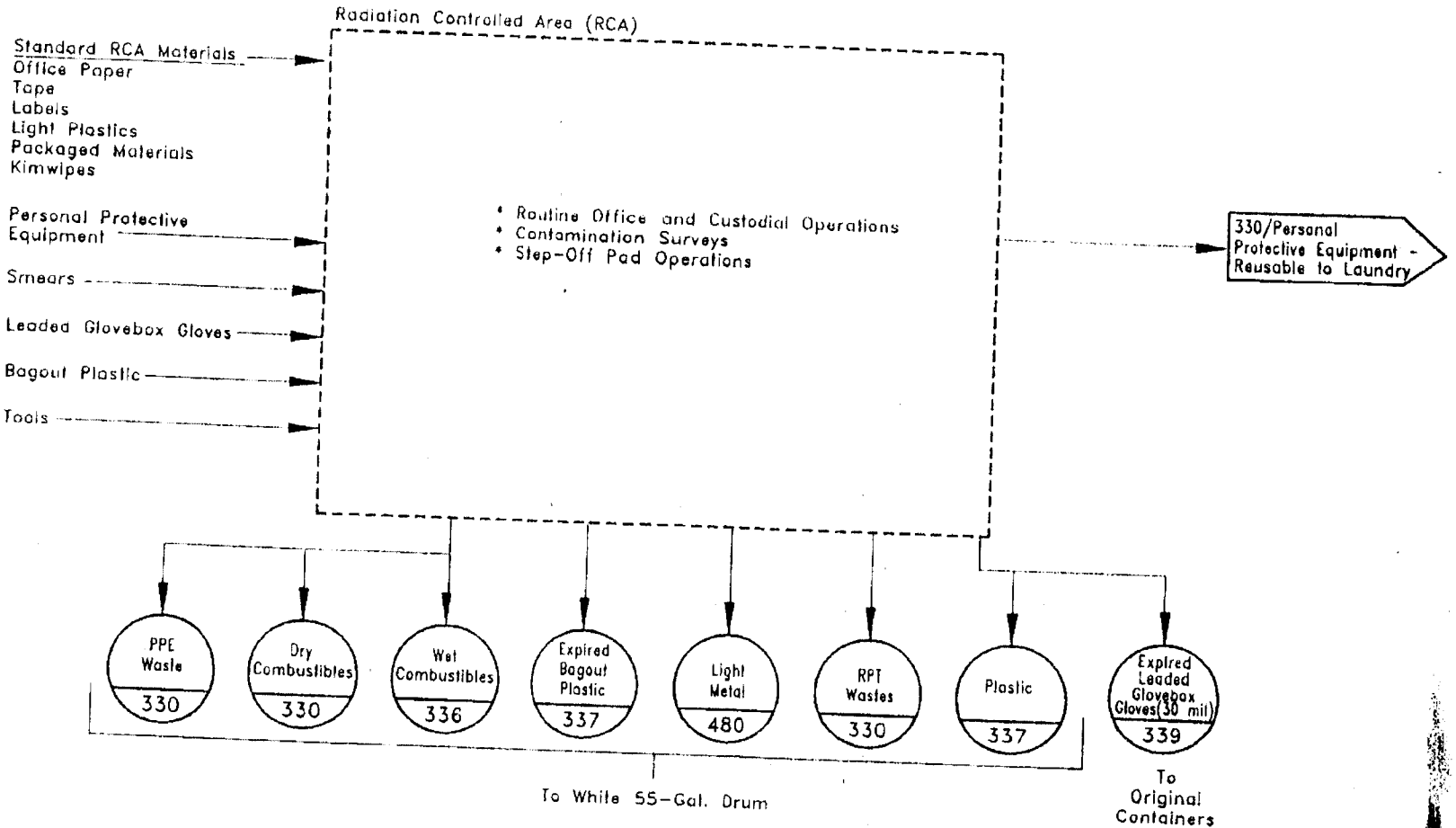

FIGURE 8.1

Rocky Flats Plant Waste Stream & Residue Identification & Characterization	BUILDING 774/PROCESS 8 GENERAL WASTE

Task	By	Date
Designed	B. Riddle	6/22/92
Drawn	C. Stadt	7/08/92
Checked	B. Riddle	7/07/92

AutoCAD 11, File Name: f774-9a 8/31/92

774-V3.2 Process 9-2 11/05/92

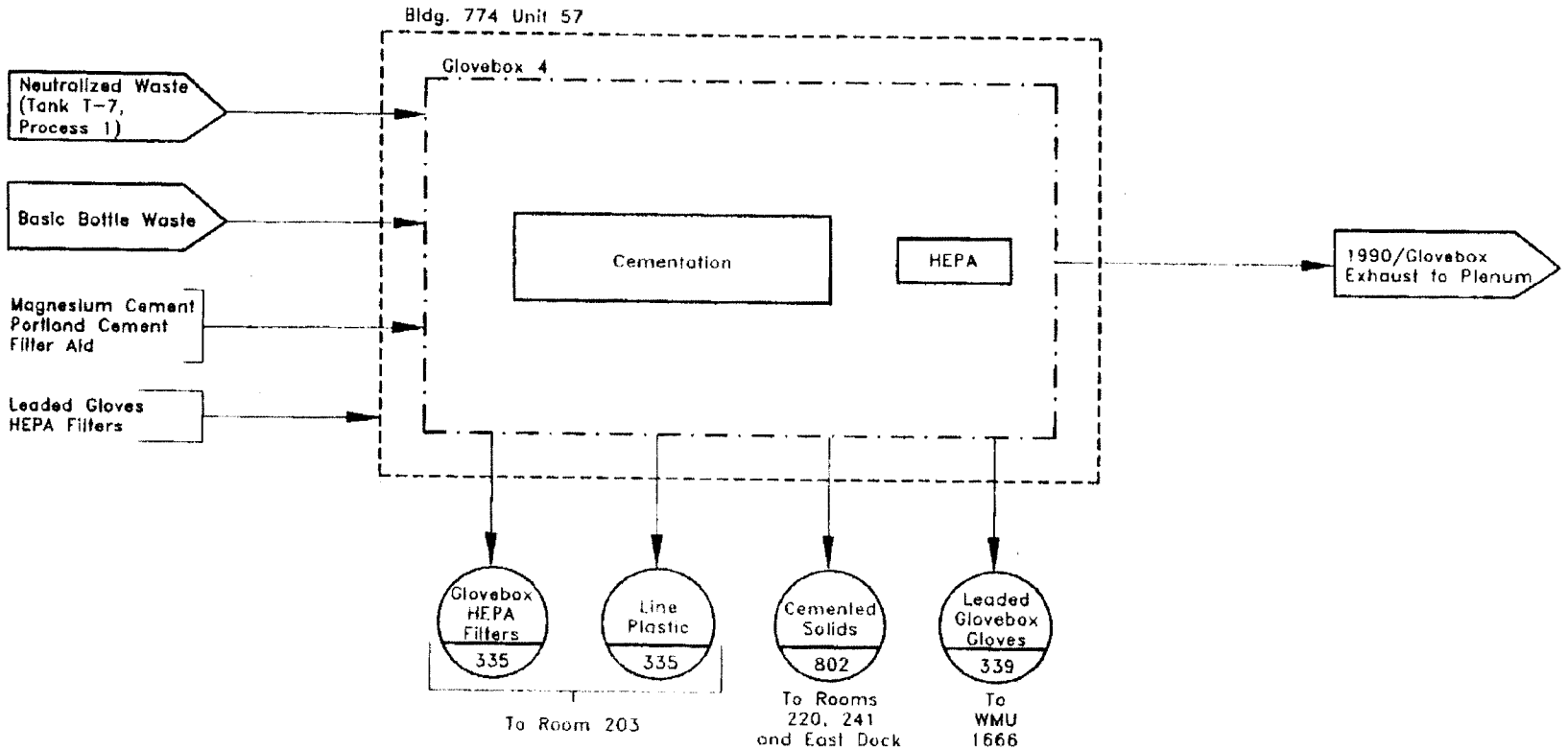

FIGURE 9.1

Rocky Flats Plant Waste Stream & Residue Identification & Characterization	BUILDING 774/PROCESS 9 MISCELLANEOUS WASTE HANDLING	Task	By	Date
		Designed	J. Johnson	8/07/92
		Drawn	C. Stadt	8/19/92
		Checked	K. Tilton	8/30/92

AutoCAD 12, File Name: f774-10a 05/24/94

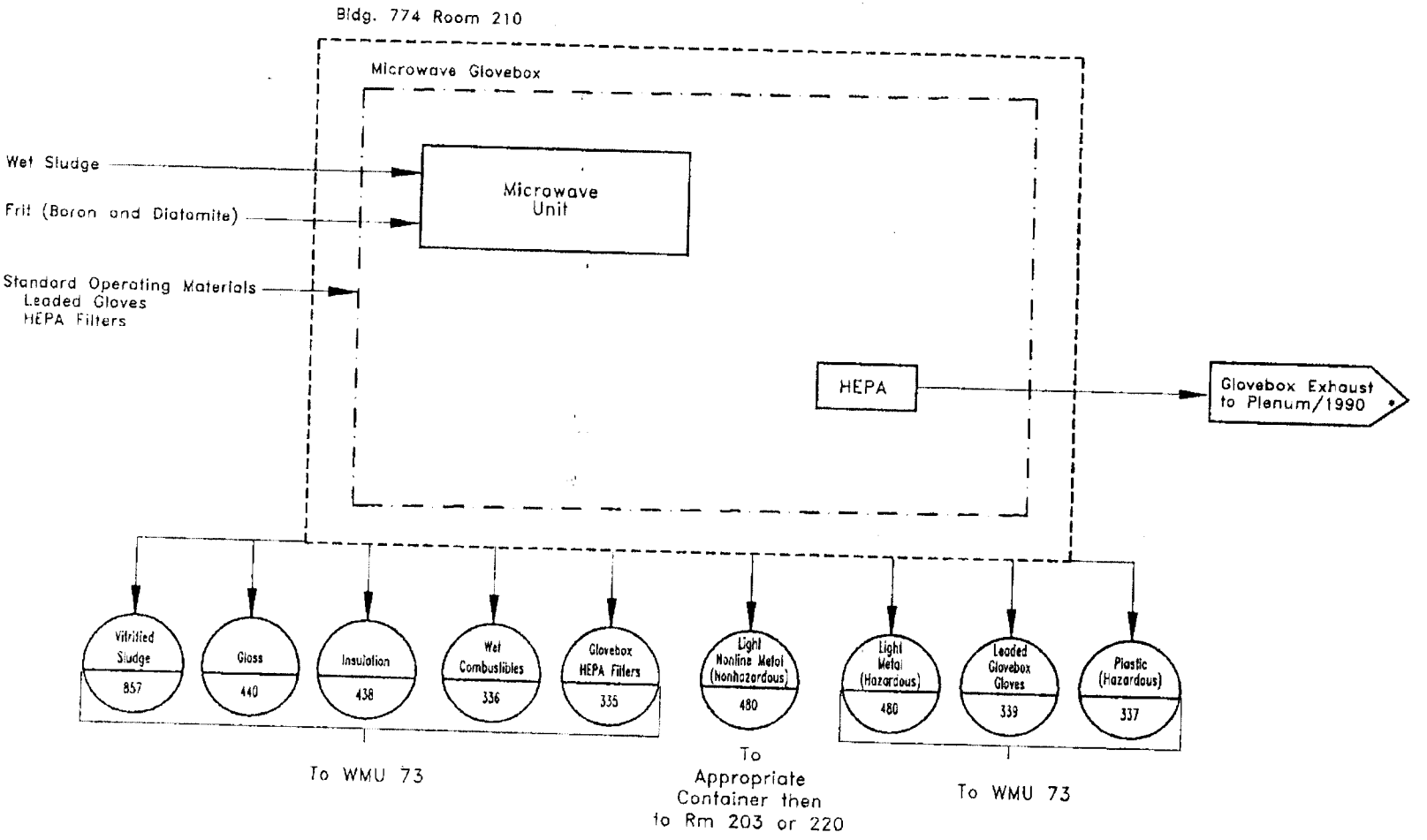

FIGURE 10.1

*Not a Solid Waste

Rocky Flats Plant Waste Stream & Residue Identification & Characterization	BUILDING 774/PROCESS 10 MICROWAVE	Task	By	Date
		Designed	T. Horton	04/27/94
		Drawn	R. Jones	04/27/94
		Checked	T. Horton	05/24/94

DIVIDER

PAGE

B-2011-0253

RECORD
CMB 6-8-09

AMWTP Advanced Mixed Waste Treatment Project	AK Source Document Review Summary	Form-1068, Rev. 4 Effective: 01/08/09 Page 1 of 3

Implementing Document: MP-TRUW-8.13

1. Souce Document Tracking Number: P090A	2. Revision: Rev. 1

3. Category

- [x] Published Documentation
- [ ] Unpublished Documentation
- [ ] Correspondence
- [ ] Discrepancy

4. Title/Description Information: History of Rocky Flats Waste Streams

Document Number: RFP-3186
Revision: 0
Author: Lori L. Luckett, Alice A. Dickman, Charlene R. Wells, and Donald J. Vickery
Date: 3/10/1982

5. AK Element	6. Generator Or Waste Type(s)	7. Location in Source Doc.	8. AK Information Summary:
WM4, WM5	RF	10-20	Tables 1 through 17. Provides correlation of waste types with general classification.
WS2, WS7	RF-001, RF-002, RF-003, RF-004, RF-330, RF-336, RF-337, RF-338, RF-374, RF-374a/697, RF-441, RF-480, RF-490	10	Table 1. Major waste categories shipped to INEL from RFP 1971-1979. Waste volume, weight, and Pu weight for each category.
WS2, WS7	RF-302, RF-370, RF-391, RF-392, RF-393, RF-440, RF-442, RF-464, RF-970, RF-241, RF-290, RF-292, RF-300, RF-301, RF-310, RF-311, RF-371, RF-372, RF-375, RF-976, RF-978, RF-990, RF-995, RF-005, RF-335, RF-339, RF-360, RF-361, RF-376, RF-409, RF-410, RF-411, RF-420, RF-421, RF-422, RF-430, RF-431, RF-432, RF-460, RF-463, RF-900, RF-950	11	Table 2. Generalized classification of waste listed as "other" in Table 1. Classifications: glass, brick & concrete, graphite, sludges and dirt, filter, metal, LSA, resins, ash, rubber sna salt. Waste volume, weight and plutonium content
WS1, WS5	RF-480	12	Table 3. Major waste contributors of light metals (RF-480) 1971-1979. Table lists the 480 waste by container prefix with associated title and volume, weight and plutonium content for each.
WS2, WS7	RF-330	12	Table 4. Major waste contributors of dry combustibles (RF-330) 1971-1979. Lists waste by prefix and title with waste volume, weight and plutonium content.

1/33

Implementing Document: MP-TRUW-8.13

5. AK Element	6. Generator Or Waste Type(s)	7. Location in Source Doc.	8. AK Information Summary:
WS2, WS7	RF-336	13	Table 5. Major waste contributors of wet combustibles (RF-336) 1971-1979. Prefix and title for contributors including waste volume, weight, and plutonium content.
WS2, WS7	RF-490	13	Table 6. Major waste contributors of HEPA filters(RF-490) 1971-1979. Lists waste by prefix and title with waste volume, weight and plutonium content.
WS2, WS7	RF-001, RF-002, RF-003	14	Table 7. Major waste contributors of Second Stage Sludge(RF-002) 1971-1979. Lists waste by prefix and title with waste volume, weight and plutonium content. Table 8. Major waste contributors of First Stage sludge(RF-001) 1971-1979. Lists waste by prefix and title with waste volume, weight and plutonium content. Table 9. Major waste contributors of Grease (RF-003) 1971-1979. Lists waste by prefix and title with waste volume, weight and plutonium content.
WS2, WS7	RF-004, RF-374, RF-374a/697	15	Table 10. Major waste contributors of Special Set ups(RF-004) 1971-1979. Lists waste by prefix and title with waste volume, weight and plutonium content. Table 11. Major waste contributors of Concrete, Asphalt, Dirt, and Grit(RF-374) 1971-1979. Lists waste by prefix and title with waste volume, weight and plutonium content.
WS2, WS7	RF-337, RF-441	16	Table 12. Major waste contributors of Plastic (PVC, Teflon, Vinyl) and Non-Leaded Rubber (RF-337) 1971-1979. Lists waste by prefix and title with waste volume, weight and plutonium content. Table 13. Major waste contributors of Raschig Rings -- Unleached (RF-441) 1971-1979. Lists waste by prefix and title with waste volume, weight and plutonium content.
WS2, WS7	RF-338	17	Table 14. Major waste contributors of Insulation Chemical Warfare Service Filter Media (RF-338) 1971-1979. Lists waste by prefix and title with waste volume, weight and plutonium content.
WS2	RF-001, RF-002, RF-003, RF-004, RF-330, RF-336, RF-337, RF-338, RF-374, RF-374a/697, RF-441, RF-480, RF-490	18	Table 15. Content Volumes and Volume Percents by Year (1971-1979).

5. AK Element	6. Generator Or Waste Type(s)	7. Location in Source Doc.	8. AK Information Summary:
WS2	N/A, RF-001, RF-002, RF-003, RF-004, RF-330, RF-336, RF-337, RF-338, RF-374, RF-374a/697, RF-441, RF-490	19	Table 15. Content Weight and Weight Percents by Year (1971-1979).
WS7	RF-001, RF-002, RF-003, RF-004, RF-330, RF-336, RF-337, RF-338, RF-374, RF-374a/697, RF-441, RF-490	20	Table 15. Content Plutonium Weight and Plutonium Weight Percents by Year (1971-1979).
WS5	RF-001, RF-002, RF-003, RF-004, RF-005, RF-241, RF-290, RF-292, RF-300, RF-301, RF-310, RF-311, RF-320, RF-330, RF-335, RF-336, RF-337, RF-338, RF-339, RF-360, RF-361, RF-370, RF-371, RF-372, RF-374, RF-374a/697, RF-375, RF-376, RF-391, RF-392, RF-393, RF-409, RF-410, RF-411, RF-420, RF-421, RF-422, RF-430, RF-431, RF-432, RF-440, RF-441, RF-442, RF-460, RF-463, RF-464, RF-480, RF-481, RF-490, RF-900, RF-950, RF-960, RF-970, RF-976, RF-978, RF-980, RF-990, RF-995	21-26	Appendix B. Rocky flats Content Codes and Descriptions.
WS5	RF-001, RF-002, RF-003, RF-004, RF-330, RF-336, RF-337, RF-338, RF-374, RF-374a/697, RF-376, RF-441, RF-480, RF-490	Page 5-11	Waste Packaging used, and the then current waste certification practices; to ID free liquids, check radioactive limits, identify waste categories.

9. Document Summary:

History of Rocky Flats waste shipped to the INEL from 1971 to 1979. Waste-history file to identify and characterize RF Tru waste stored at INEL since 1970.

10. Source Document Data Limitations (if any):

11. AK Expert: Randall C. Morris (Print) — Randall C. Morris (Sign) — 04/07/09 (Date)

3/33

HISTORY OF ROCKY FLATS WASTE STREAMS

Lori L. Luckett
Alice A. Dickman
Charlene R. Wells
Donald J. Vickery

Rockwell International
Energy Systems Group
Rocky Flats Plant
P.O. Box 464
Golden, Colorado 80401

U.S. DEPARTMENT OF ENERGY
CONTRACT DE-AC04-76DP03533

P090

BEST AVAILABLE COPY

4/33

DISCLAIMER

This report was prepared as an account of work sponsored by an agency of the United States Government. Neither the United States Government nor any agency thereof, nor any of their employees, makes any warranty, express or implied, or assumes any legal liability or responsibility for the accuracy, completeness, or usefulness of any information, apparatus, product, or process disclosed, or represents that its use would not infringe privately owned rights. Reference herein to any specific commercial product, process, or service by trade name, trademark, manufacturer, or otherwise, does not necessarily constitute or imply its endorsement, recommendation, or favoring by the United States Government or any agency thereof. The views and opinions of authors expressed herein do not necessarily state or reflect those of the United States Government or any agency thereof.

Printed in the United States of America
Available from the
National Technical Information Service
U.S. Department of Commerce
Springfield, Virginia 22161

Page Range	Domestic Price*
001-025	$6.00
026-050	7.50
051-075	9.00
076-100	10.50
101-125	12.00

*All microfiche are priced at $5.00
Prices Subject to Change Without Notice

BEST AVAILABLE COPY

5/33

Printed
March 10, 1982

RFP-3186
UC-70 NUCLEAR WASTE
MANAGEMENT
DOE/TIC 4500 (Rev. 69)

HISTORY OF ROCKY FLATS WASTE STREAMS

Lori L. Luckett

Alice A. Dickman

Charlene R. Wells

Donald J. Vickery

R. D. Howerton, Editor

G. Shekell, Compositor

SUBJECT DESCRIPTORS
Transuranic Waste
WIPP

ROCKWELL INTERNATIONAL
ENERGY SYSTEMS GROUP
ROCKY FLATS PLANT
P.O. BOX 464
GOLDEN, COLORADO 80401

Prepared under Contract DE-AC04-76DP03533
for the
Albuquerque Operations Office
U.S. Department of Energy

6/33

CONTENTS

Abstract 1

Introduction 1

Discussion 2

Waste Packaging 2

Waste Categories 3

Summary and Conclusions 14

Appendix A – Tabulated Summaries of Major Waste Categories Shipped to INEL ... 15

Appendix B – Rocky Flats Content Codes and Descriptions 19

7/33

RFP-3186

HISTORY OF ROCKY FLATS WASTE STREAMS

Lori L. Luckett, Alice A. Dickman,

Charlene R. Wells, and Donald J. Vickery

ABSTRACT

An analysis of the waste streams at Rocky Flats was done to provide information for the Waste Certification Program. This program has involved studying the types and amounts of retrievable transuranic (TRU) waste from Rocky Flats that is stored at the Idaho National Engineering Laboratory (INEL). The information can be used to estimate the types and amounts of waste that will need to be permanently stored in the Waste Isolation Pilot Plant (WIPP). The study covered mostly the eight-year period from June 1971 to June 1979. The types, amounts, and plutonium content of TRU waste and the areas or operations responsible for generating the waste are summarized in this waste stream history report.

From the period studied, a total of 24,546,153 lbs of waste containing 211,148 g of plutonium currently occupies 709,497 cu ft of storage space at INEL.

INTRODUCTION

The objective of this study was to generate a waste-history file that would identify and characterize transuranic (TRU) waste produced at the Rocky Flats Plant and stored at the Idaho National Engineering Laboratory (INEL) since 1970. Transuranic waste is presently defined as waste contaminated with more that 10 nanocuries of TRU nuclides per gram of waste. This TRU classification was first used in the early 1970's. Most TRU waste originating at Rocky Flats is contaminated with plutonium, with the waste being generated primarily in plutonium fabrication areas and in the chemical processing facility. The Research and Development organization, Plutonium Analytical Laboratories, and other support groups generate lesser quantities of contaminated waste.

The TRU waste is packaged and shipped for storage at INEL where it is classified as retrievable, awaiting permanent storage in an approved repository. One proposed repository is the Waste Isolation Pilot Plant (WIPP) near Carlsbad, New Mexico. A recently issued Waste Acceptance Criteria (WAC) set forth by WIPP is considered a basis for acceptance of waste in a permanent repository. The study described in this report will aid in determining the certification status of past and present Rocky Flats waste against the WAC.

Internal shipping and handling procedures at the Rocky Flats Plant were obtained to aid in documenting the Plant's waste history. Plant procedures used prior to 1975 for inspecting TRU waste were discarded whenever a new procedure was issued that superseded the previous one. After 1975, the Technical Writing Group was given the responsibility of distributing and upgrading the Plant procedures. Also included in this task was the maintenance of a history copy of the procedures. All shipping and handling procedures prior to 1975 presumably had been destroyed; however, shipping and handling procedures, dated 1971, were found in the Quality Engineering System and Plans Office. These procedures correlated closely with those now in effect.

Data on Plant waste shipped off-site for storage was not kept until mid-1971 when a records-keeping effort was begun by Waste Management personnel; consequently, data on waste generation from 1970 to mid-1971 was not incorporated into the computer data base. Much of the data contained in this report was obtained from the Process Control Computer Operations Group. Other information was collected from personnel and records in Production Control, Data Processing, Waste Operations, Nuclear Materials Control, and from area supervisors. While most of the information reported here pertains to the period 1971-1979, current activities also are included.

8/33

DISCUSSION

Waste Packaging

Container Condition

All TRU waste shipped from Rocky Flats to INEL during the 1970's was packaged in 30-gal drums, 55-gal drums, 4' X 4' X 7' boxes and 2' X 4' X 7' boxes (half boxes). Use of the 30-gal drums was discontinued in 1973; however, while they were in use, the 30-gal drums were often packaged inside the 55-gal drums. Prior to 1971, wooden crates were used for shipping TRU waste from the Rocky Flats Plant to Idaho. In 1971, improved waste packages came into use. These packages consist of plywood boxes coated with fiberglass reinforced polyester (FRP). The coating was applied to the boxes by Rocky Flats personnel until late 1971 when the Plant began purchasing FRP boxes from a vendor. This type of box is still being used. Another change in the acceptable waste shipping containers started in late 1975 when rigid liners were first used in the 55-gal drums.

All containers were and continue to be inspected prior to leaving the Rocky Flats Plant site. The inspection criteria consists of (1) satisfactory condition of container element, (2) absence of free liquids, (3) levels of radioactive contamination control being within Department of Transportation (DOT) and Rocky Flats Plant limits, and (4) waste containers being labeled properly.

Standard procedure for all 55-gal drums and the 2.3-mm-thick molded polyethylene drum liners require a visual inspection by the operator for damage prior to having waste placed in the drums. When a drum is full, the generator contacts Waste Management for disposal. Waste Management is responsible for visually inspecting the drum gasket and drum liner for damage and for final inspection approval of each waste container. After a drum has passed all inspection tests, it is sealed by Waste Management using the following procedure:

1. Place lid on drum
2. Assure gasket is in proper position for an airtight seal
3. Assure bolt is in line with seal
4. Seal

The boxes are composed of 3/4-inch-thick plywood and are coated with a 3-mm laminate of FRP. This coating serves several purposes. It is a fire retardant, it seals the crate against moisture, and it serves as a support, thus strengthening the crate. Prior to use, the crates are lined with 0.15-mm polyvinyl chloride (PVC) and a 1.3-mm fiberboard to protect the PVC from sharp edges in the waste. The boxes are visually inspected by an operator before he adds any waste. Waste Management personnel then inspect the boxes after they have been filled. To pass inspection, boxes must be judged satisfactory by both the operator and by Waste Management.

Waste Certification - Present Practices

Free Liquids: Waste Management personnel visually inspect the drums and boxes for free liquids prior to the containers being sealed. The procedure for checking drums has been to place a drum in a horizontal position with the bottom of the drum slightly elevated. This position helps toward determining that the drum contains no free liquids. Sealed drums are opened for this test, and those stored outside at freezing conditions are moved inside for at least 24 hours prior to the free-liquid test. Waste Management performs the free-liquid test as an essential step of overall inspection approval. Containers in which free liquid is present can pass inspection by adding an absorbent such as Oil Dri or cement, depending on the type of waste.

Radioactive Limits: Waste Management, with the aid of personnel from Health, Safety and Environment or from Health Physics, is responsible for measuring the level of radioactivity. All waste receptacles shipped off the Rocky Flats Plant site are subject to alpha and gamma radiation limits. These limits are determined by the Department of Transportation (DOT). The limits are

1. 250 counts per minute of fixed alpha radiation
2. 20 disintegrations per minute of alpha radiation

9/33

3. 200 millirem surface gamma count

Label: Waste Management must also inspect the label of a waste container to ensure that the label is correct. The label contains the following information:

1. content code
2. prefix and/or building and room number of generation
3. radiology test results
4. beryllium content
5. line generated or non-line generated
6. total weight and plutonium content
7. seal date
8. supervisor certification

Each of these will be discussed in turn.

The content code is a three-digit entry that specifically identifies the type of material in the container. Appendix B is a complete listing of content codes used for waste shipped to INEL from Rocky Flats during the period 1971-1979.

Rocky Flats identifies its general stream operations by account numbers. Prefix numbers, which provide a further breakdown of account numbers, are used to identify a specific operation within the general account stream. Since 1970, prefix numbers have been discontinued when an operation is discontinued; however, the same numbers have sometimes been reassigned to another operation. In cases where one prefix is assigned to more than one operation, the date of the package can separate which operation the prefix is describing. Some labels do not give the prefix; instead, it gives the room and building number where the waste is processed. This serves the same purpose as the prefix; it locates the source of the waste stream.

Radiology tests are checked to make certain that radiation from the waste is within the limits previously described. Beryllium contaminants are noted although there are no shipping limits. The waste also is marked as line generated or non-line generated. Line generated waste is generated in a process, such as plutonium recovery sludge. Non-line generated waste is considered to be suspect waste, such as laundry waste.

The weight and plutonium content are checked to make certain both are within the shipping limits. These limits are as follow:

Container	Maximum Weight (lbs)	Maximum Pu Weight (g)
55-gal drum	800	200
30-gal drum	800	200
4' x 4' x 7' box	5000	560
2' x 4' x 7' box	5000	280

Although the maximum shipping weight for plutonium in boxes is 5 g/cu ft, the rule-of-thumb limit for a box is 350 g. The waste is retrieved if there is more than 350 g of plutonium in a box. The half-box legal limit is 280 g of plutonium; however, waste contaminated with large amounts of plutonium is not shipped in half boxes but in the 4' X 4' X 7' FRP-coated boxes.

The waste package is sealed after Waste Management inspects the package and the shipping label. If the container passes inspection and the labeling information is correct and within shipping requirements, the label is signed and dated.

Waste Categories

Unleached Light Metals

The largest waste category is unleached light metals (Content Code 480). This category includes metals such as iron, copper, aluminum, and stainless steel, which are low enough in plutonium content that they are not processed through the leaching process of the plutonium recovery operations in Building 771.

10/33

The total volume of these metals, as shown in Tables 1 and 2,* is 308,829 cu ft, which represents 43.5 vol % of the total waste generated at the Rocky Flats Plant. The overall weight percent is 34.2 and the plutonium is 13.8 wt %.

Table 3 shows the major waste contributors of unleached light metals. Most of the light metals are equipment, such as glove boxes, from all areas of the Rocky Flats Plant. The equipment is too bulky to be stored efficiently, so it is sent to Size Reduction (Prefixes 389, 33, 776**) for compaction and treatment before being shipped to INEL. The major waste contributor to this category of unleached light metals is the Size Reduction area which accounts for 82.1% of the waste by volume. Plutonium waste having high radiation levels, which accounts for 75.7% of the plutonium in this category, is packaged in FRP boxes (Prefix 389). Although the equipment has been through Size Reduction, the packaging is still somewhat inefficient, which accounts for the volume percent (43.5) in this category being larger than the weight percent (34.2).

Since 1972, the first year for which complete data are available, there has been a decrease in the volume, weight, and plutonium content in the unleached metals category. These decreases reduced the volume and mass by a factor of 4. There are two reasons believed to be the cause of these reductions. First, the cleanup of Building 776 after the 1969 fire added a large amount to this category, causing an increase through 1972. Secondly, there was a backlog of metal awaiting treatment prior to shipment, when the discard limits were lowered. This allowed more metal to be transported without treatment.

Combustibles

Combustibles are divided into two categories, dry (Content Code 330) and wet (Content Code 336). Dry combustibles are the Plant's second largest waste type, by volume, stored at INEL. They account for 72,902 cu ft of waste (10.3 vol %) and 1,404,797 lbs of waste (5.7 wt %).

The major waste sources are shown in Table 4 for dry combustibles and in Table 5 for wet combustibles. Size Reduction accounts for the largest amount of combustible wastes; the Slow Non-Specification Recount (recycle) is the next largest contributor.

There are more sources of combustible waste than unleached light metals for two reasons. First, generation of combustible waste occurs plantwide. Secondly, combustibles are more easily disposed of by individual areas because special treatment is not required, as is the case with unleached light metals.

The amount of dry combustibles generated has increased steadily over the years, and the amount of wet combustibles generated has steadily decreased. There are two apparent reasons for these changes. One is better segregation between wet and dry combustibles. With the addition of a small amount of wet combustibles to a package containing dry combustibles, the package has been reclassified as wet combustibles. The second reason is that dry combustibles generally are below the discard limit and therefore are more easily disposed of. The wet combustibles, in contrast, are usually above the discard limit and therefore more difficult to dispose of.

Waste that contains low amounts of plutonium or waste that contains no plutonium but is generated in a plutonium production area is considered TRU-suspect waste and is handled in the same manner as other TRU wastes with higher amounts of contaminants. The dry combustible category consists primarily of suspect waste.

HEPA Filters

High Efficiency Particulate Air (HEPA) filters (Content Code 490) are used throughout the Plant and are the third largest volume contributor, with 8.9 vol % of the total waste. Table 6 shows the sources of the HEPA filters. Since these filters are bulky and inefficient for shipping, they are sent from production areas of the Plant to Size Reduction which accounts for 6.2 vol % of the overall waste (44,057 cu ft) and 12.5 wt % of the waste

*All tables are presented in Appendix A.
**See Table 3.

11/33

93.9 vol % of all filters, a total of 59,472 cu ft. The filters with higher plutonium content are packaged in FRP boxes, which account for 84.4 vol % of the total HEPA filter waste. Filters collected during a PuF cleanup following the 1969 fire are another source of HEPA filters and account for 2.0 vol % of the total filter waste.

Plutonium weight remains fairly constant as do the percentage contribution of HEPA filters to the total waste in each year. The yearly weight and volume of HEPA filters decreased, however, over the years studied. There are several reasons for this decrease. The building fire in 1969 caused the total HEPA filter disposal to be high through 1972 because the plenums were rebuilt and all of the old filters were discarded. Also, during the early 1970's, several building filtering systems were upgraded, which resulted in high totals during 1973 and 1974.

Plutonium Recovery Wastes

Four of the major TRU waste categories stored at INEL from Rocky Flats are liquid wastes from the plutonium recovery operations that have been treated to form a sludge–a solid suitable for shipping. Waste liquids are collected through process drain networks and stored in holding tanks in the process areas. These tanks are sampled to determine what subsequent treatment is required. The liquid waste is then transferred by pipeline or by truck to the appropriate treatment tank. In certain cases, such as R&D laboratories that generate small amounts of contaminated liquid, the liquid is accumulated in suitable containers and transferred by truck to the treatment area. The TRU liquid waste categories are

First Stage Sludge - Content Code 1

Second Stage Sludge - Content Code 2

Grease - Content Code 3

Special Setups - Content Code 4

The first stage of the solidification operation is a chemical precipitation of radioactive elements from the liquid waste. The chemicals used are ferric sulfate, calcium chloride, magnesium sulfate, and coagulates. The resulting sludge, categorized as first stage sludge, is filtered and discarded into a drum. The sludge in each drum is then sampled and analyzed for radioactive material content. First stage sludge is packed with cement that absorbs any free liquids.

Effluent from the first stage treatment is filtered and sent to the second stage batch process where it is mixed with high-nitrate radioactive materials. The same chemicals used in the first stage chemical precipitation process are used for precipitation in the second stage. The second stage batch process handles radioactive high-nitrate waste. Radioactive low-nitrate wastes are treated in a continuous process that is similar to the batch process in treatment, filtration, packaging, and sampling. The resulting precipitate is packaged in drums with cement and referred to as second stage sludge. Samples of second stage sludge are taken at random intervals during the shift and are analyzed for radioactive materials. Effluent from the second stage treatment unit is sampled to ensure that radioactivity limits are met. The effluent is then transferred to evaporation ponds for concentration of the nitrate solution.

Contaminated liquid wastes that are not compatible with the chemical precipitation and evaporation treatments are solidified by mixing the liquids with a cement absorbent. The liquid waste is made into a basic solution and put into a drum that contains the absorbent mixture. The moisture is absorbed by the cement mixture, which then hardens to form a solid mass suitable for shipping. These waste drums are called Special Setups.

Organic liquid wastes, such as contaminated lathe coolant, are transferred from process areas to Building 774 feed tanks for the organic solidification line. These wastes are then mixed with solidifying agents to form a dry solid that is discharged into 55-gal drums. The resultant product is categorized as Grease.

Second stage sludge is the fourth largest category of waste shipped from Rocky Flats for storage at INEL. (See Table 1.) It accounts for 46,351 cu ft (6.5 vol %) and 3,385,472 lbs (13.8 wt %). The next largest waste contributor is first stage sludge,

12/3?

which accounts for 6.2 vol % of the overall waste (44,057 cu ft) and 12.5 wt % of the waste (3,073,238 lbs). The plutonium content of first stage sludge is about 15 times greater than that of second stage sludge. This is expected since it is the primary plutonium removal treatment. Grease follows first stage sludge with 4.4 vol % and 9.2 wt % (30,289 cu ft and 2,228,119 lbs, respectively). Special Setups contribute 1.1 vol % and 2.7 wt % of the total waste (7,739 cu ft and 653,876 lbs, respectively).

Tables 7, 8, 9, and 10 show the sources of second stage sludge, first stage sludge, grease, and special setups, respectively. It would seem logical to expect all of the first stage sludge to come from the first stage liquid waste treatment area and similarly the other wastes to come from their area. Although the vast majority of the wastes (more than 99.9%) do this, there are a few drums that do not conform to this expectation. There is no reasonable explanation for this, and a labeling error is assumed to be the explanation.

The percent of yearly waste remains relatively unchanged over the years studied. This indicates an overall decreased production of waste at the Rocky Flats Plant during the years highlighted in this report (1971-1979).

Blacktop, Concrete, Dirt, and Sand

Content Code 374 includes dirt, concrete, blacktop, and sand that have been excavated for construction work. This accounts for 23,517 cu ft, or 3.3 vol % of the TRU waste generated at Rocky Flats and stored at INEL. Sources of this waste are shown in Table 11. The largest source of this waste category, 68.8 vol %, is material from the lip area beside the blacktop pad that covers contaminated soil near the east gate of the Rocky Flats Plant. This does not contain a detectable amount of plutonium weight. Size Reduction areas account for 20.9 vol % of the waste, 7.6% of this being packaged in FRP boxes.

The remaining 10.3 vol % comes from such sources as maintenance, laundry, and utility areas. The liquid waste treatment area and the slow side of the plutonium recovery area in Building 771 are also contributors, as well as other areas. All waste in the dirt, concrete, blacktop, and sand category was collected from 1973 to 1977. Most of this was collected in 1976 and 1977 when excavation around the blacktop pad was performed.

Plastics and Non-Leaded Rubber

Plastics [e.g. polyvinyl chloride (PVC), teflon, and vinyl] and non-leaded rubber are grouped together under Content Code 337. These materials contribute 11,948 cu ft to the TRU waste shipped for storage at INEL from Rocky Flats. This quanity represents 1.7 vol %, 1.2 wt %, and 1.0 plutonium weight percent of all TRU waste from Rocky Flats during the 8 yrs studied. (See Table 1.)

Table 12 shows the major sources of plastics from the Rocky Flats Plant. The Special Setup operations of the liquid waste treatment facilities in Building 774 account for 25.5 vol % of the plastic waste. The slow recycle (recount) side of the plutonium recovery facilities accounts for 14.7 vol %, the fast side accounts for 3.2 vol %, and the Size Reduction areas account for 15.9 vol % of the plastics. The laboratories and chemical operations in Building 771 supply another 10.5 vol %, and 7.6 vol % is attributed to maintenance, laundry, and utilities. Of the remaining sources of plastics and unleaded rubber, each source contributes less than 1 vol % to the total quantity of waste in this category. The diversity of the sources of plastics show that plastics, like wet and dry combustibles, are an easily handled waste form; therefore they are not sent to Size Reduction for treatment prior to shipping.

The volume, weight, and plutonium weight of plastics and unleaded rubber, as well as their respective percentages of the yearly waste, have decreased steadily over the years.

Raschig Rings

Raschig rings used at Rocky Flats are hollow glass cylinders containing boron, a neutron absorber. Raschig rings are used in liquid-holding tanks in various areas of the Plant, and serve to prevent

criticality in liquid solutions that have a high concentration of neutron-emitting particles, such as plutonium. Raschig rings that contain insufficient amounts of plutonium to warrant recovery are packaged as waste without any pretreatment. These rings are grouped together in Content Code 441 (Unleached Raschig Rings). Unleached Raschig rings account for 11,390 cu ft of the waste stored at INEL from Rocky Flats. This amount represents 1.6 vol %, 1.2 wt %, and 5.9 plutonium weight percent.

Major waste contributors of unleached Raschig rings are given in Table 13. The major contributors are the plutonium recovery areas (Prefix Codes 2 and 5), which accounts for 74.6 vol % of this category. The remaining 25.4 % of the Raschig rings come from areas that include the R&D Chemistry Laboratory's process waste, R&D liquid, Building 707 Foundry Operations, and Size Reduction areas.

An increase in unleached Raschig rings shipped from Rocky Flats to INEL in 1973 resulted from a change in Nuclear Safety rules at Rocky Flats requiring that Raschig rings be changed more often. In 1975 the discard limits were changed, and Raschig rings that earlier would have undergone treatment prior to storage were shipped without treatment. Since 1975, the volume of Raschig rings has been decreasing, corresponding to the decreased generation of plutonium production solutions.

Insulation and Chemical Warfare Service Filter Media

A total of 10,402 cu ft (1.5 vol % of insulation and Chemical Warfare Service (CWS) filter media (Content Code 338) was shipped between 1971 and 1976 from Rocky Flats for storage at INEL.

The sources of insulation and CWS filter media are shown in Table 14. Size Reduction areas account for 84.0 vol % of this category. Only 17.2 vol % of this waste category is packaged in FRP boxes, indicating a low plutonium level; 11.3 vol % is from Building 771 Plutonium Recovery–Slow Side (Prefix 2).

The insulation and CWS filter media category contributed approximately 4 vol % of the total yearly waste in 1973 and 1974. In 1972, 1975, and 1976, small quantities of this waste category were found in the yearly waste stream. After 1976, this category was completely phased out and the waste was incorporated into cemented insulation and filter media, Content Code 376.

Other Waste Types

All of the waste categories, divided by content codes, that contribute more than 1.0 vol % of the total Rocky Flats TRU waste stored at INEL have been tabulated and discussed previously in this report. The "other" waste categories, collectively, contribute 8.4 vol %, 8.5 wt %, and 50.8 plutonium weight percent to the total waste. The waste is classified into the more narrow categories of glass, brick and concrete, graphite, dirt and sludges, filters, metal, hard and soft LSA* material, resins, ash, rubber, and salt, as shown in Table 2. These are listed in order of decreasing volumes.

SUMMARY AND CONCLUSIONS

All waste packaged for storage must pass inspection before being shipped off the Rocky Flats Plant site. This inspection ensures that the containers are in satisfactory condition, there are no free liquids present, the levels of radioactive contamination are within specified limits, and that the container is properly classified and labeled. This waste, having met all criteria, is then shipped to INEL for storage until the proposed repository is completed. With the storage data now computerized, coupled with content codes and prefixes, it is significantly easier to discover the type of material packed in a specific container, where that waste stream originated, the primary contaminants and their weight, the weight of the container, and the date the container was shipped for storage.

*LSA - Low Specific Activity. This term is defined under Content Code 900 and 950 in Appendix B.

14/32

Waste shipped from Rocky Flats to INEL for storage has been categorized by the type and source of the waste. This report summarized the volumes, weights, and plutonium weights of the waste by categorizing the waste into groups having similar content. Within the groups that categorize the waste by type, this report sub-categorizes the waste by its source (prefix). The Computer Center can provide information on any combination of content code and prefix. Over the years, the amount of TRU waste shipped for storage at INEL from Rocky Flats has decreased steadily in volume, weight, and plutonium weight.

15/37

APPENDIX A

Tabulated Summaries of Major Waste Categories Shipped to INEL

Appendix A contains summaries, in tabular form, of the waste stream categories sent to INEL for storage from June 1971 to June 1979. Table 1 shows the volumes, weights, and plutonium weights of TRU waste shipped from Rocky Flats to INEL by classification of waste type in order of decreasing volume. Table 2 shows the generalized breakdown of waste classified as "Other" in Table 1, also in the order of decreasing volume. Tables 3-14 show the major sources of each waste stream of the major waste category, again in the order of decreasing volume.

Volume and volume percent of the major waste categories are by calendar year in Table 15. Table 16 shows the content weight and weight percent by calendar year. Mass and mass percent of the waste by calendar year is shown in Table 17.

16/32

TABLE 1. Major Waste Categories Shipped to INEL from Rocky Flats Plant 1971-1979

Content Code	Content Type	Volume (cu ft)	Volume (%)	Weight (lbs)	Weight (%)	Pu Weight (g)	Pu Weight (%)
480	Unleached Light Metals	308,829	43.5	8,386,295	34.2	29,194	13.8
330	Dry Combustibles	72,902	10.3	1,404,797	5.7	7,913	3.8
490	HEPA Filters	63,340	8.9	1,079,186	4.4	7,488	3.5
2	Sludge-2nd Stage	46,351	6.5	3,385,472	13.8	1,937	0.9
1	Sludge-1st Stage	44,057	6.2	3,073,238	12.5	30,481	14.4
3	Grease	30,829	4.4	2,228,119	9.1	1,921	0.9
374	Concrete, Blacktop, Dirt, and Sand	23,517	3.3	1,007,546	4.1	647	0.3
336	Wet Combustibles	18,554	2.6	469,649	1.9	2,509	1.2
337	Plastic (PVC, Teflon, Vinyl) & Non-Leaded Rubber	11,948	1.7	275,252	1.1	1,877	0.9
441	Raschig Rings-Unleached	11,390	1.6	300,679	1.2	12,428	5.9
338	Insulation & Chemical Warfare Service Filter Media	10,402	1.5	191,054	0.8	6,501	3.1
4	Special Setups	7,739	1.1	653,876	2.7	1,016	0.5
Other*		59,639	8.4	2,090,990	8.5	107,236	50.8
	TOTAL	709,497	100.0	24,546,153	100.0	211,148	100.0

*For further detail on this category, see Table 2.

17/3

TABLE 2. Generalized Classification of Waste Listed as "Other" in Table 1

1971-1979

Classification	Content Codes	Volume (cu ft)	Volume (%)	Weight (lbs)	Weight (%)	Pu Weight (g)	Pu Weight (%)
Glass	302, 370, 391, 392, 393, 440, 442, 464, 970	16,193	2.3	443,030	1.8	10,616	5.0
Brick & Concrete	371, 372	5,512	0.8	180,111	0.7	3,249	1.5
Graphite	300, 301, 310, 311	6,928	1.0	242,336	1.0	9,465	4.5
Sludges & Dirt	241, 290, 292, 375, 976, 978, 990, 995	6,782	1.0	282,605	1.2	3,103	1.5
Filter	335, 360, 361, 376	6,628	0.9	187,472	0.8	17,307	8.2
Metal	320, 481, 960, 980	8,267	1.2	366,321	1.5	20,095	9.5
Hard & Soft LSA*	900, 950	1,945	0.3	57,988	0.2	58	--
Resins	430, 431, 432	1,697	0.2	70,220	0.3	8,556	4.2
Ash	420, 421, 422	911	0.1	27,833	0.1	18,931	9.0
Rubber	339, 460, 463	4,557	0.6	220,696	0.9	15,619	7.4
Salt	5, 407, 410, 411	219	--	12,378	--	237	--
	TOTAL	59,639	8.4	2,090,990	8.5	107,236	50.8

*LSA-Low Specific Activity.

18/32

TABLE 3. Major Waste Contributors of Light Metals--Not Readily Leachable (Content Code 480)
1971-1979

Prefix	Title	Volume (cu ft)	Volume (%)	Weight (lbs)	Weight (%)	Pu Weight (g)	Pu Weight (%)
389	Size Reduction FRP Boxes	201,464	65.2	5,644,500	67.3	22,094.2	75.7
33	Size Reduction Construction	32,629	10.6	767,387	9.1	68.0	0.2
776	Size Reduction Non-Retrievable	19,351	6.3	425,713	5.1	286.7	1.0
777	Specification Assay Drums-Bulk Residue	11,480	3.7	242,010	2.9	18.4	0.1
771	R&D Drums-Bulk Residue Pu Cleanup	9,353	3.0	225,497	2.7	923.2	3.2
15	Non-Specification	5,271	1.7	111,150	1.3	26.3	0.1
11	Metallurgical Operations Casting	3,248	1.1	65,680	0.8	1.3	--
2	Non-Specification Recount, Slow	2,301	0.7	81,048	1.0	419.0	1.4
Other		23,732	7.7	823,310	9.8	5,356.7	18.3
	TOTAL	308,829	100.0	8,386,295	100.0	29,193.8	100.0

TABLE 4. Major Waste Contributors of Dry Combustibles (Content Code 330)
1971-1979

Prefix	Title	Volume (cu ft)	Volume (%)	Weight (lbs)	Weight (%)	Pu Weight (g)	Pu Weight (%)
389	Size Reduction FRP Boxes	55,167	75.7	919,210	65.4	5,468.5	69.1
2	Non-Specification Recount, Slow	3,969	5.4	91,498	6.5	459.0	5.8
90	Solid Waste NMC	3,844	5.3	136,949	9.7	757.0	9.6
15	Non-Specification	2,374	3.3	57,597	4.1	155.0	2.0
17	Mtce., Laundry, Utilities	1,286	1.8	31,724	2.3	21.0	0.3
33	Size Reduction Construction	803	1.1	17,905	1.3	2.9	--
771	R&D Drums-Bulk Residue Pu Cleanup	374	0.5	27,026	1.9	197.0	2.5
Other		5,085	6.9	122,888	8.8	2,852.8	10.7
	TOTAL	72,902	100.0	1,404,797	100.0	7,913.2	100.0

19/37

TABLE 5. Major Waste Contributors of Wet Combustibles (Content Code 336)

1971-1979

Prefix	Title	Volume (cu ft)	Volume (%)	Weight (lbs)	Weight (%)	Pu Weight (g)	Pu Weight (%)
89	Size Reduction Area	6,817	36.7	148,527	31.6	298.0	11.9
2	Non-Specification Recount, Slow	3,381	18.2	83,174	17.7	743.0	29.6
90	Solid Waste NMC (Bldg. 750)*	1,577	8.5	57,108	12.2	395.3	15.7
90	Waste Mgmt. Compacted Discard Drums (Bldg. 776)*	1,430	7.7	51,785	11.0	435.9	17.4
37	Labs, Chem Op Supply	1,194	6.4	22,358	4.8	144.0	5.7
17	Mtce, Laundry, Utilities	907	4.9	19,747	4.2	4.0	0.2
15	Non-Specification	545	2.9	14,488	3.1	44.1	1.7
1	Non-Specification Recount, Fast	472	2.5	11,172	2.4	11.0	0.4
12	Foundry 707	332	1.8	8,255	1.8	24.0	1.0
389	Size Reduction FRP Boxes	224	1.2	3,980	0.8	2.1	0.1
Other		1,675	9.0	49,055	10.4	408.2	16.3
	TOTAL	18,554	100.0	469,649	100.0	2,509.6	100.0

*The original title for prefix 90 came into disuse. After a period of time, the prefix was again used, but for a different title.

What Time Period?

TABLE 6. Major Waste Contributors of HEPA Filters (Content Code 490)

1971-1979

Prefix	Title	Volume (cu ft)	Volume (%)	Weight (lbs)	Weight (%)	Pu Weight (g)	Pu Weight (%)
389	Size Reduction FRP Boxes	53,424	84.4	947,766	87.8	6,343.5	84.7
776	Size Reduction Non-Retrievable	4,256	6.7	44,870	4.2	363.3	4.9
1371	Pu Chemistry	1,904	3.0	21,460	2.0	86.0	1.1
33	Size Reduction Construction	1,792	2.8	32,240	3.0	1.6	--
771	R&D Drums-Bulk Residue Pu Cleanup	1,268	2.0	17,706	1.6	499.0	6.0
Other		696	1.1	15,144	1.4	244.6	3.3
	TOTAL	63,340	100.0	1,079,186	100.0	7,488.0	100.0

20/37

TABLE 7. Waste Contributors of Second Stage Sludge (Content Code 2)

1971-1979

Prefix	Title	Volume (cu ft)	Volume (%)	Weight (lbs)	Weight (%)	Pu Weight (g)	Pu Weight (%)
742	Liquid Waste Treatment-2nd Stage	46,339	100.0	3,383,501	100.0	1,925.9	100.0
743	Liquid Waste Treatment-Drainage Sludge	8	--	1,397	--	1.8	--
741	Liquid Waste Treatment-1st Stage	4	--	574	--	8.9	--
	TOTAL	46,351	100.0	3,385,472	100.0	1,936.6	100.0

TABLE 8. Waste Contributors of First Stage Sludge (Content Code 1)

1971-1979

Prefix	Title	Volume (cu ft)	Volume (%)	Weight (lbs)	Weight (%)	Pu Weight (g)	Pu Weight (%)
741	Liquid Waste Treatment-1st Stage	44,050	100.0	3,072,724	100.0	30,480.5	100.0
742	Liquid Waste Treatment-2nd Stage	7	--	514	--	.3	--
	TOTAL	44,057	100.0	3,073,238	100.0	30,480.8	100.0

TABLE 9. Waste Contributors of Grease (Content Code 3)

1971-1979

Prefix	Title	Volume (cu ft)	Volume (%)	Weight (lbs)	Weight (%)	Pu Weight (g)	Pu Weight (%)
743	Liquid Waste Treatment-Drainage Sludge	30,789	99.9	2,225,203	98.7	1,920.0	100.0
32	Assembly Bulk Residue	22	0.1	1,134	0.5	0.0	--
744	Liquid Waste Treatment-Special Setups	7	--	590	0.3	0.6	--
742	Liquid Waste Treatment-2nd Stage	7	--	692	0.3	0.1	--
89	Size Reduction Area	4	--	500	0.2	0.5	--
	TOTAL	30,829	100.0	2,228,119	100.0	1,921.2	100.0

21/3

TABLE 10. Waste Contributor of Special Setups (Content Code 4)

1971-1979

Prefix	Title	Volume (cu ft)	Volume (%)	Weight (lbs)	Weight (%)	Pu Weight (g)	Pu Weight (%)
744	Liquid Waste Treatment, Special Setups	7,739	100.0	653,876	100.0	1,016.2	100.0

TABLE 11. Major Waste Contributors of Concrete, Asphalt, Dirt, and Grit (Content Code 374)

1971-1979

Prefix	Title	Volume (cu ft)	Volume (%)	Weight (lbs)	Weight (%)	Pu Weight (g)	Pu Weight (%)
185	Contaminated Soil-Lip Area Side of Pad	16,184	68.8	747,760	74.2	0.0	--
33	Size Reduction Construction	3,136	13.3	85,920	8.5	6.2	1.0
389	Size Reduction FRP Boxes	1,792	7.6	54,220	5.4	70.2	10.9
2	Non-Specification Recount, Slow	1,087	4.6	50,460	5.0	298.1	46.1
5	Non-Specification Raschig Rings	559	2.4	20,638	2.1	271.0	41.8
17	Mtce., Laundry, Utilities	265	1.1	17,321	1.7	0.0	--
746	Liquid Waste Treatment, Misc. Waste	176	0.8	14,262	1.4	0.0	--
Other		318	1.4	16,965	1.7	1.4	0.2
	TOTAL	23,517	100.0	1,007,546	100.0	646.9	100.0

TABLE 12. Major Waste Contributors of Plastic (PVC, Teflon, Vinyl) and Non-Leaded Rubber (Content Code 337) 1971-1979

Prefix	Title	Volume (cu ft)	Volume (%)	Weight (lbs)	Weight (%)	Pu Weight (g)	Pu Weight (%)
744	Liquid Waste Treatment, Special Setups	3,041	25.5	54,762	19.9	37.5	2.0
2	Non-Specification Recount, Slow	1,757	14.7	42,483	15.4	588.0	31.3
89	Size Reduction Area	1,338	11.2	28,242	10.3	130.0	6.9
37	Analytical Labs, Chemical Operations, Support Labs	1,250	10.5	35,631	12.9	70.0	3.8
17	Mtce., Laundry, Utilities	904	7.6	21,689	7.0	13.0	0.7
33	Size Reduction Construction	448	3.7	8,480	3.1	0.6	--
1	Non-Specification Recount, Fast	382	3.2	8,804	3.2	25.0	1.3
776	Size Reduction Non-Retrievable Waste	125	1.0	9,641	3.5	261.0	13.9
Other		2,703	22.6	65,520	23.8	751.7	40.1
	TOTAL	11,948	100.0	275,252	100.0	1,876.8	100.0

TABLE 13. Major Waste Contributors of Raschig Rings–Unleached (Content Code 441) 1971-1979

Prefix	Title	Volume (cu ft)	Volume (%)	Weight (lbs)	Weight (%)	Pu Weight (g)	Pu Weight (%)
2	Non-Specification Recount, Slow	4,449	39.1	115,646	38.5	6,929.5	55.8
5	Non-Specification Raschig Rings	4,050	35.5	100,429	33.4	1,258.0	10.1
12	Foundry 707	545	4.8	14,912	5.0	1,404.0	11.3
89	Size Reduction Area	531	4.7	17,195	5.7	337.0	2.7
41	R&D Chem Lab Process Waste	479	4.2	12,675	4.2	1,227.0	9.9
23	776 Fabrication Bulk Residue	302	2.7	8,548	2.8	157.0	1.3
76	Size Reduction Equipment	265	2.3	7,181	2.4	0.0	--
45	R&E Lab Chemical Processing	206	1.8	5,278	1.8	0.0	--
Other		563	4.9	18,815	6.2	1,115.0	8.9
	TOTAL	11,390	100.0	300,679	100.0	12,427.5	100.0

23/37

TABLE 14. Major Waste Contributors of Insulation Chemical Warfare Service Filter Media (Content Code 338)

1971-1979

Prefix	Title	Volume (cu ft)	Volume (%)	Weight (lbs)	Weight (%)	Pu Weight (g)	Pu Weight (%)
33	Size Reduction Construction	6,944	66.8	123,850	64.8	9.1	0.1
389	Size Reduction FRP Boxes	1,792	17.2	30,040	15.7	66.5	1.0
2	Non-Specification Recount, Slow	1,172	11.3	23,417	12.3	4,010.0	61.7
Other		494	4.7	13,747	7.2	2,415.0	37.2
	TOTAL	10,402	100.0	191,054	100.0	6,500.6	100.0

24/35

TABLE 15. Content Volumes and Volume Percents by Year (1971-1979)

Content Code	1971 Volume (cu ft)	1971 Volume (%)	1972 Volume (cu ft)	1972 Volume (%)	1973 Volume (cu ft)	1973 Volume (%)	1974 Volume (cu ft)	1974 Volume (%)
480	42,226	66.1	65,762	46.9	58,793	48.7	59,944	53.7
330	4,422	6.9	3,919	2.8	3,545	2.9	3,654	3.3
490	4,965	7.8	12,151	8.7	10,818	9.0	10,871	9.7
2	4,459	7.0	8,388	6.0	6,626	5.5	9,323	8.4
1	1,916	3.0	9,298	6.6	8,424	7.0	6,766	6.1
3	1,363	2.1	8,078	5.8	4,400	3.6	4,223	3.8
374	--	--	--	--	2,842	1.3	2,081	1.9
336	1,209	1.9	10,670	7.6	3,265	2.7	1,599	1.4
337	391	0.6	4,808	3.4	3,223	2.7	1,271	1.1
441	--	--	384	0.3	1,778	1.5	295	0.3
338	--	--	239	0.2	4,972	4.1	4,734	4.2
4	420	0.7	2,128	1.5	1,187	1.0	722	0.6
Other	2,525	3.9	14,356	10.2	10,839	9.0	6,232	5.5
TOTAL	63,896	100.0	140,181	100.0	120,712	100.0	111,715	100.0

Content Code	1975 Volume (cu ft)	1975 Volume (%)	1976 Volume (cu ft)	1976 Volume (%)	1977 Volume (cu ft)	1977 Volume (%)	1978 Volume (cu ft)	1978 Volume (%)	1979 Volume (cu ft)	1979 Volume (%)
480	25,741	38.9	27,056	38.0	14,265	19.6	10,643	23.3	4,399	25.4
330	3,879	5.9	11,499	16.1	20,904	28.7	14,174	31.0	6,906	39.9
490	9,527	14.4	4,480	6.3	4,032	5.5	4,480	9.8	2,016	11.6
2	5,314	8.0	4,260	6.0	3,346	4.6	3,346	7.3	1,289	7.5
1	5,328	8.1	4,179	5.9	3,781	5.2	3,803	8.3	562	3.2
3	3,626	5.5	2,661	3.7	2,462	3.4	3,486	7.7	530	3.1
374	935	1.4	4,172	5.9	13,487	18.6	--	--	--	--
336	848	1.3	703	1.0	140	0.2	96	0.2	24	0.1
337	803	1.2	671	0.9	560	0.8	221	0.5	--	--
441	3,346	5.1	2,484	3.5	2,034	2.8	1,069	2.3	--	--
338	265	0.4	192	0.3	--	--	--	--	--	--
4	774	1.1	678	1.0	1,135	1.6	649	1.4	46	0.3
Other	5,745	8.7	8,154	11.4	6,558	9.0	3,688	8.1	1,542	8.9
TOTAL	66,131	100.0	71,190	100.0	72,704	100.0	45,654	100.0	17,314	100.0

25/3

TABLE 16. Content Weight and Weight Percent by Year (1971-1979)

Content Code	1971 Weight (lbs)	1971 Weight (%)	1972 Weight (lbs)	1972 Weight (%)	1973 Weight (lbs)	1973 Weight (%)	1974 Weight (lbs)	1974 Weight (%)
480	871,640	49.1	2,357,959	38.9	1,545,343	38.8	1,516,339	40.2
330	101,011	5.7	113,803	1.9	102,347	2.6	98,993	2.6
490	53,900	3.0	215,117	3.6	189,577	4.7	182,320	4.8
2	337,371	19.0	745,193	12.4	464,013	11.7	672,906	17.8
1	129,460	7.3	756,834	12.6	566,689	14.2	470,869	12.4
3	107,350	6.0	685,042	11.4	316,160	7.9	293,268	7.8
374	--	--	--	--	84,186	2.1	68,465	1.8
336	28,080	1.6	245,717	4.1	95,956	2.4	48,745	1.3
337	8,823	0.5	115,126	1.9	70,823	1.8	29,030	0.8
441	--	--	14,338	0.2	51,754	1.3	7,561	0.2
338	--	--	4,485	0.1	90,043	2.2	85,429	2.3
4	35,636	2.0	231,981	3.9	88,169	2.2	55,382	1.5
Other	102,268	5.8	539,095	9.0	316,640	8.1	243,347	6.5
TOTAL	1,775,539	100.0	6,024,690	100.0	3,981,700	100.0	3,772,654	100.0

Content Code	1975 Weight (lbs)	1975 Weight (%)	1976 Weight (lbs)	1976 Weight (%)	1977 Weight (lbs)	1977 Weight (%)	1978 Weight (lbs)	1978 Weight (%)	1979 Weight (lbs)	1979 Weight (%)
480	664,859	28.5	668,079	29.0	373,129	15.3	289,347	20.0	99,600	21.2
330	88,339	3.8	221,080	9.6	335,873	13.8	227,771	15.7	115,580	24.5
490	165,072	7.1	85,420	3.7	71,280	2.9	81,260	5.6	35,240	7.5
2	354,131	15.2	279,865	12.2	223,044	9.2	225,583	15.6	82,841	17.6
1	362,299	15.5	291,039	12.6	260,363	10.7	202,157	14.0	33,528	7.2
3	242,117	10.4	169,621	7.4	151,344	6.2	222,738	15.4	40,479	8.6
374	56,559	2.4	143,439	6.2	654,897	26.9	--	--	--	--
336	26,099	1.1	17,890	0.8	4,452	0.2	2,517	0.2	193	0.0
337	17,566	0.8	14,877	0.6	13,480	0.5	5,527	0.4	--	--
441	84,606	3.6	62,731	2.7	51,336	2.1	28,353	2.0	--	--
338	5,335	0.2	5,762	0.3	--	--	--	--	--	--
4	56,724	2.4	50,025	2.2	82,477	3.4	47,872	3.3	5,610	1.2
Other	212,054	9.0	292,209	12.7	214,115	8.8	113,395	7.8	57,867	12.2
TOTAL	2,335,760	100.0	2,302,037	100.0	2,435,790	100.0	1,446,520	100.0	470,938	100.0

26/3

TABLE 17. Content Plutonium Weight and Plutonium Weight Percent by Year (1971-1979)

Content Code	1971 Plutonium (g)	1971 Plutonium (wt %)	1972 Plutonium (g)	1972 Plutonium (wt %)	1973 Plutonium (g)	1973 Plutonium (wt %)	1974 Plutonium (g)	1974 Plutonium (wt %)
480	348.0	8.3	9,386.0	22.5	9,545.4	27.7	6,628.0	22.9
330	295.0	7.1	543.4	1.3	372.1	1.1	425.9	1.5
490	592.3	14.2	1,492.2	3.6	698.9	2.0	1,040.0	3.6
2	96.0	2.3	396.9	1.0	269.7	0.8	379.4	1.3
1	2,309.5	55.4	11,472.4	27.5	3,767.7	10.9	3,230.8	11.2
3	80.5	1.9	866.5	2.1	613.3	1.8	151.0	0.5
374	--	--	--	--	97.6	0.3	520.6	1.8
336	78.1	1.9	828.0	2.0	563.0	1.6	275.3	1.0
337	17.7	0.4	728.6	1.7	529.0	1.5	187.5	0.6
441	--	--	390.0	0.9	4,583.0	13.3	557.0	1.9
338	--	--	27.0	0.1	1,948.6	5.7	2,152.0	7.4
4	58.2	1.4	342.6	0.8	193.4	0.6	118.7	0.4
Other	295.0	7.1	15,256.1	36.5	11,290.4	32.7	13,291.4	45.9
TOTAL	4,170.3	100.0	41,729.7	100.0	34,472.6	100.0	28,957.6	100.0

Content Code	1975 Plutonium (g)	1975 Plutonium (wt %)	1976 Plutonium (g)	1976 Plutonium (wt %)	1977 Plutonium (g)	1977 Plutonium (wt %)	1978 Plutonium (g)	1978 Plutonium (wt %)	1979 Plutonium (g)	1979 Plutonium (wt %)
480	885.4	3.3	550.3	2.4	1,270.1	3.5	457.3	4.1	123.3	2.5
330	436.7	1.6	1,236.6	5.3	2,684.7	7.5	987.2	8.9	931.6	18.9
490	835.6	3.1	1,142.1	4.9	656.6	1.8	959.7	8.7	70.0	1.4
2	216.3	0.8	188.7	0.8	181.6	0.5	155.5	1.4	52.2	1.1
1	3,283.2	12.3	2,502.2	10.7	1,536.6	4.3	2,025.1	18.3	353.3	7.2
3	82.2	0.3	79.6	0.3	39.2	0.1	8.9	0.1	0.0	0.0
374	23.4	0.1	5.3	--	0.0	--	--	--	--	--
336	431.5	1.6	170.1	0.7	121.0	0.3	41.6	0.4	0.0	0.0
337	112.6	0.4	58.7	0.3	169.3	0.5	73.4	0.7	--	--
441	5,180.5	19.4	924.0	4.0	478.0	1.3	315.0	2.9	--	--
338	1,278.0	4.8	1,095.0	4.7	--	--	--	--	--	--
4	133.3	0.5	83.3	0.4	55.4	0.2	27.3	0.2	4.0	0.1
Other	13,829.6	51.8	15,295.4	65.5	28,598.2	80.0	5,993.0	54.3	3,386.7	68.8
TOTAL	26,728.3	100.0	23,331.3	100.0	35,790.7	100.0	11,044.0	100.0	4,921.1	100.0

27/3

APPENDIX B

Rocky Flats Content Codes and Descriptions

Appendix B identifies the content codes used to describe TRU waste shipped from Rocky Flats to INEL for storage from June 1971 to June 1979. Also included in the appendix is a brief description of the waste code and the area in which it originated.

Content Code 1 - First Stage Sludge
Plutonium recovery liquid wastes are treated with chemicals to precipitate radioactive elements in Building 774. The resulting sludge is filtered and discharged into 55-gal drums with cement being added to ensure that no free liquid is present.

Content Code 2 - Second Stage Sludge
Radioactive high-nitrate wastes are mixed with the first stage effluent along with chemicals or coagulants to precipitate the radioactive contaminants. The resulting sludge is filtered and packaged in 55-gal drums. This process is called the "batch" process.

Radioactive low-nitrate wastes are treated in a continuous process that is similar to the batch process in treatment, filtration, and packaging. Effluent from the first stage sludge is not added to this process.

Content Code 3 - Grease
Organic wastes such as lathe coolant are mixed with solidifying agents to form a dry solid. The solid is discharged into 55-gal drums.

Content Code 4 - Special Setups
Contaminated liquid wastes that are not compatible with chemical precipitation and evaporation treatments are made basic, if necessary, and added to a cement absorbent mixture in 55-gal drums.

Content Code 5 - Evaporator Salts
High-nitrate wastes are concentrated in solar evaporation ponds and sent to the Building 774 evaporator. The liquids are then concentrated and dried on steam-heated drums, which results in a salt residue.

Content Code 241 - Americium Process Residue
Information on this content code was unattainable.

Content Code 290 - Filter Sludge
This category is a sludge type residue from the incinerator drum filter and various filter plenums. This waste originates from all plutonium areas.

Content Code 292 - Cemented Sludge
This category consists of miscellaneous sludges produced on-site, which have been packaged in drums with cement added as an absorbent.

28/33

Content Code 300 - Graphite Molds
Graphite is used as the mold material in casting plutonium metal. Used casting molds make up this category. This waste originates in the plutonium foundry.

Content Code 301 - Graphite Cases
Graphite cases are a part of the mold used in casting plutonium metal. The waste originates in the plutonium foundry.

Content Code 302 and 464 - Benelex and Plexiglass
Benelex and plexiglass are used in all areas as neutron radiation shielding around glove boxes.

Content Code 310 - Graphite, Pulverized or Fines
This category consists of graphite that has been pulverized; it originates from the Plutonium Recovery area.

Content Code 311 - Graphite Heels
Pulverized graphite is passed through the acid dissolution process with the remaining residue being classified as Graphite Heel. This waste originates in the Plutonium Recovery area.

Content Code 320 - Heavy Non-SS* Metal (Ta, W, Pt, Pb)
This category consists mainly of used tantalum crucibles, funnels, and inserts from casting plutonium metal. This waste originates from the Foundry and Molten Salt areas.

Content Code 330 - Combustibles, Dry
Mainly dry rags and paper make up this category. This waste originates from all areas that have plutonium.

Content Code 335 - Absolute Drybox Filters
This waste category originates from all plutonium areas and consists of 8" X 8" wooden frames with asbestos type filter media. These filters are used to remove airborne particulates in glove-box systems.

Content Code 336 - Combustibles, Wet
All plutonium areas generate this waste category, which consists primarily of paper saturated with decontamination solution and/or rags that may contain nitric acid from inside the glove boxes.

Content Code 337 - Plastics (Teflon, PVC, Vinyl, etc.) and Non-Leaded Rubber
This category consists of plastics, bags, sample vials, and plastic sheeting used to line decontamination enclosures and dryboxes. This waste originates from all plutonium areas.

Content Code 338 and 360 - Insulation
The asbestos type material that is used as a heat shield around furnaces and steam pipes and filter media is included. This waste originates from all plutonium areas.

Content Code 339 - Leaded Drybox Gloves and Other Leaded Material
This category is made up mostly of heavy-leaded rubber gloves that are used in the access ports of glove boxes. All plutonium areas generate this waste category.

*SS = Source and Special Material.

29/5

Content Code 360 - (see Code 338)

Content Code 361 - Insulation Heel
Information on this content code was unattainable.

Content Code 370 - Leco Crucibles
Leco crucibles are small ceramic crucibles used for laboratory analysis. This waste category originates from the plutonium laboratory.

Content Code 371 - Firebrick
Firebrick is plutonium-contaminated brick used to line the recovery incinerator. This category is generated from the Plutonium Recovery area.

Content Code 372 - Grit
Tiny particles used to grit-blast non-stainless steel metal items. This method is no longer used. The Plutonium Recovery area generated this waste category.

Content Code 374 - Blacktop, Concrete, Dirt, and Sand
The entire plant site generates this category as a result of spills.

Content Code 375 - Oil Dri (Trade Name)
Oil Dri is an absorbent clay used primarily in the bottom of 55-gal drums to absorb liquid that could leak through a ruptured polyethylene bag. The Plutonium Recovery area is responsible for the origin of this category.

Content Code 376 - Cemented Insulation and Filter Media
Insulation and filter media is cemented to ensure against moisture and pressurization.

Content Code 391 - Unpulverized Sand and Crucible
This category is made up of magnesium oxide crucibles and sand generated when plutonium fluoride is reduced to plutonium metal in the reduction furnaces. The Plutonium Recovery area is the originator of this category.

Content Code 392 - Unpulverized Slag and Crucible
This category consists of a mixture of slag, crucible, and sand generated when plutonium fluoride is reduced to plutonium metal in the reduction furnace. The Plutonium Recovery area is where this category is generated.

Content Code 393 - Sand, Slag, and Crucible Heel
The Plutonium Recovery area is the originator of this category. After the buttons are broken out of their crucibles, the crucibles are returned to the dissolution lines for recovery of the plutonium. A crucible that does not dissolve is termed a "sand, slag, and crucible heel."

Content Code 407 - Molten Salt, 8% Unpulverized
Salt consisting of sodium chloride, potassium chloride, and 8% magnesium chloride. These salts are used to pyrochemically remove americium from plutonium metal. The Molten Salt area is the originator of this category.

Content Code 410 - Molten Salt, 30% Pulverized
The description of this category is the same as Content Code 407, except that the magnesium chloride percentage is 30%. The Molten Salt area is also the originator of this category.

Content Code 411 - Electrorefining Salt
This salt consists of sodium chloride and potassium chloride with 8% magnesium chloride. The salt is used to pyrochemically remove all types of impurities from plutonium metal. The Electrorefining Facility is responsible for originating this category.

Content Code 420 - Incinerator Ash, Virgin
Combustible plutonium-bearing residues are burned in the Recovery Facility incinerator with the ash residue making up this category. The ash is jaw crushed and ball milled prior to removal from the glove box. The Plutonium Recovery area is the originator of this category.

Content Code 421 - Ash Heels
The heel is the residue remaining after the incinerator ash has received one or more passes through the dissolution process. The Plutonium Recovery area is the originator of this category.

Content Code 422 - Soot
This category is generated from the incinerator in the Plutonium Recovery area. This airborne fly ash material accumulated in the offgas system and is generated only when the offgas system is disassembled and cleaned.

Content Code 430 - Resin, Unleached
This category originates from ion columns in the Plutonium Recovery area and is unleached.

Content Code 431 - Resin, Leached
This category originates from the Plutonium Recovery area where the ion column resin has been leached in water to recover the plutonium.

Content Code 432 - Resin, Cemented
This category is made up of ion column resin that has been washed in water and mixed with a cementing agent to solidify the material. This waste originates from the Plutonium Recovery area.

Content Code 440 - Glass (Except Raschig Rings)
This category is made up of glassware, primarily from the analytical lab, and glass vessels from the recovery facility glove boxes. All plutonium areas are responsible for generating this waste.

Content Code 441 - Unleached Raschig Rings Only
These high boron content glass rings are used as a neutron poison in storage tanks that contain plutonium solution. All plutonium areas generated this waste category.

31/32

Content Code 442 – Leached Raschig Rings
These high boron content glass rings have been leached with nitric acid to remove the plutonium residue. All plutonium areas generate this category.

Content Code 460 – Washables
Information on this category was unattainable.

Content Code 463 – Drybox Gloves
This content code has been incorporated into Content Code 339.

Content Code 464 – (see Code 302)

Content Code 480 – Light Non-SS Metal*, (Fe, Cu, Al, Stainless Steel, etc.) Not Prepared for Leaching
This category consists of contaminated metals, primarily stainless steel that has been removed from all plutonium areas.

Content Code 481 – Light Non-SS Metal*, (Fe, Cu, Al, Stainless Steel, etc.) Prepared for Leaching
This category consists of contaminated metal that has been cut into pieces suitable for cleaning. The Size Reduction area is the originator of this waste category.

Content Code 490 – HEPA Filters
This category consists of High Efficiency Particulate Air (HEPA) filters that are used in the exhaust systems of plutonium buildings to remove airborne particles. All plutonium areas contribute to this category.

Content Code 900 – Soft-LSA Non-Plutonium
This category consists of paper and plastics that have been contaminated as follows:

a. Uranium and Thorium or chemical concentrates.
b. Material in which the activity is essentially uniformly distributed and in which the estimated concentration per gram of contents does not exceed
   1. 0.0001 millicuries of Group I radionuclides (e.g., U-230, U-233, U-234, U-232), or
   2. 0.005 millicuries of Group II radionuclides (e.g., U-230, U-233, U-234, U-236), or
   3. 0.3 millicuries of Group III or IV radionuclides (e.g., tritium, U-235, U-238, natural uranium, europium, plutonium)
c. Nonradioactive objects externally contaminated with radioactive material, provided that the radioactive material is not readily dispersible and the surface contamination, when averaged over an area of one square meter, does not exceed 0.0001 millicuries per square centimeter of Group I radionuclides or 0.001 millicuries per square centimeter of other radionuclides.

Content Code 950 – LSA Metal and Glass
This category consists of any metals or glass that have become contaminated as follows:

a. Contaminated with uranium or thorium ores or their chemical concentrates.

*SS means Source and Special Material, a term that has been replaced by the term, Nuclear Material.

b. Material in which the activity is essentially uniformly distributed and in which the estimated average concentration does not exceed
   1. 0.0001 millicuries of Group I radionuclides (e.g., americium, plutonium, U-232), or
   2. 0.005 millicuries of Group II radionuclides (e.g., U-230, U-233, U-234, U-236), or
   3. 0.3 millicuries of Group III or IV radionuclides (e.g., tritium, U-235, U-238, natural uranium, europium, plutonium)

c. Nonradioactive objects externally contaminated with radioactive material, provided that the radioactive material is not readily dispersible and the surface contamination, when averaged over an area of one square meter, does not exceed 0.0001 millicuries per square centimeter of Group I radionuclides or 0.001 millicuries per square centimeter of other radionuclides.

Content Code 960 – Non-Plutonium Concrete and Asphalt
This category is made up of concrete and asphalt from areas considered to be "suspect."

Content Code 970 – Non-Plutonium Wood and Benelex
This category consists of wood and benelex from areas that are considered to be "suspect."

Content Code 976 – 776 Process Sludge
This category consists of sludge retrieved from the process tanks behind Building 776.

Content Code 978 – 778 Laundry Sludge
This content code consists of sludge from laundry waste.

Content Code 980 – Non-Plutonium Equipment
This category consists of discarded equipment from non-plutonium areas.

Content Code 990 – Soil 774
This category consists of soil taken from around Building 774.

Content Code 995 – Sludge-Building 995
Sanitary sludge from Building 995 makes up this category.

3353

Container Information

Container ID: 10001226 | IDC: RF | 004 | Special Setups | Other IDC: N/A

FGE Limit: 128.17 grams
Limit is based on historical data if no assay data is present

Overpacked: | Overpacked Inner Container ID: | Overpack | NCR(0)

Container Type: A | drum, 55 Gallon Drum (17H)

Length: in. Width: in. Height: in. Box Volume: 0 cubic in.

Repaired Container: | FRP Type:

Gross Weight: 743.09 lbs | Net Weight: 663.09 lbs | Fill Factor: 90 %

Waste Volume: 49.50 gal.

PCB Present: N | Bulged requires venting: | Potential Roaster Oxide:

Loose Contamination Present: | Evidence of Staining: | Offsite Waste: N | Items Of Interest

Current Location: WIPP

FGE: 74.88 grams
FGE (Error): 26.65 grams
FGE + 1 Sigma Error: 101.53 grams
Crit Exempt:

Process Code: DS
Origin Code: TYPE II
Status: INACTIVE
Disposition: MANUAL
Shipping Category:
Pack Date: 09-Mar-1983
WDS Status: EMPLACED_CNTR

Type of waste/contents description

Waste Type Code	TRM	Mixed Transuranic Waste
Waste Matrix Code	S3150	Solidified Homogeneous Solids
Waste Profile Code		

EPA Code

D006
D008
D011
F001
F002

Container Comment

Add New Container Comment

Esign Comment

Comment Esig History

Container Information

Container ID: 10516386 | IDC: BN 508 AMWTP Newly Generated Debris | Other IDC: N/A | FGE Limit: .01 grams

Limit is based on historical data if no assay data is present

Overpacked: | Overpacked Inner Container ID: | Overpack | NCR(0)

Container Type: 55 FOR NEW DRUM - 55

Length: in. Width: in. Height: in. Box Volume: cubic in.

Repaired Container: | FRP Type:

Gross Weight: 61.74 lbs | Net Weight: 35.74 lbs | Loose Contamination Present:

Fill Factor: 65 % | Waste Volume: 35.75 gal. | Evidence of Staining:

PCB Present? N | Bulged requires venting: | Offsite Waste? N

Potential Roaster Oxide: | Items Of Interest

Current Location:

FGE: .01 grams

FGE (Error): .00 grams

FGE + 1 Sigma Error: .01 grams

Crit Exempt: N

Process Code: SC

Origin Code: NEW WASTE

Status: INACTIVE

Disposition: FACILITY ACCEPT

Shipping Category:

Pack Date: 10-Apr-2014

WDS Status: APPROVED_CERT

Type of waste/contents description

Waste Type Code: TRM Mixed Transuranic Waste

Waste Matrix Code:

Waste Profile Code:

EPA Code

D004
D005
D006
D007
D008

Container Comment

Add New Container Comment

Esign Comment

Comment Esig History

Container Information

Container ID: 10504976 | IDC: RF 004 Special Setups | Other IDC: N/A | FGE Limit: .43 grams

Limit is based on historical data if no assay data is present

Overpacked: Y | Overpacked Inner Container ID: 10504448 | Overpack | NCR(0)

Container Type: C drum, 83 Gallon | FGE: .24 grams

Length: in. Width: in. Height: in. Box Volume: 0 cubic in. | FGE (Error): .10 grams

Repaired Container: | FRP Type: | FGE + 1 Sigma Error: .34 grams

Crit Exempt: N

Gross Weight: 672.53 lbs | Net Weight: 529.53 lbs | Loose Contamination Present: | Process Code: LM

Fill Factor: 95 % | Waste Volume: gal. | Evidence of Staining: | Origin Code: TSA-RE

PCB Present?: N | Bulged requires venting?: | Offsite Waste?: N | Status: ACTIVE

Potential Roaster Oxide: | Items Of Interest | Disposition: WIPP ACCEPT

Current Location: 630, SA x,y,z: 12,1,3 | Shipping Category:

Pack Date: 14-Oct-2013

WDS Status:

Type of waste/contents description

Waste Type Code	LLW	Low-Level Waste
Waste Matrix Code	S3150	Solidified Homogeneous Solids
Waste Profile Code		

EPA Code

Container Comment

Add New Container Comment

Esign Comment

Comment Esig History

Container Information

Container ID: 10207672 | IDC: RF 004 Special Setups | Other IDC: N/A | FGE Limit: 43.26 grams

Limit is based on historical data if no assay data is present

Overpacked: | Overpacked Inner Container ID: | Overpack | NCR(0)

FGE: 26.87 grams

Container Type: 425 drum, 55 Gallon (UN1A2/X425/S), DOT/WIPP approved

FGE (Error): 8.20 grams

Length: in. Width: in. Height: in. Box Volume: cubic in.

FGE + 1 Sigma Error: 35.06 grams

Repaired Container: | FRP Type:

Crit Exempt: N

Gross Weight: 551.25 lbs | Net Weight: 475.25 lbs | Loose Contamination Present:

Process Code: DS

Fill Factor: 90 % | Waste Volume: gal. | Evidence of Staining:

Origin Code: NEW WASTE

PCB Present? N | Bulged requires venting: | Offsite Waste? N

Status: ACTIVE

Potential Roaster Oxide: | Items Of Interest

Disposition: WIPP ACCEPT

Shipping Category:

Current Location: 631, NF x,y,z: 5,1,4

Pack Date: 24-Jan-2008

WDS Status: PRESUB_CERT

Type of waste/contents description

Waste Type Code:

Waste Matrix Code: S3150 Solidified Homogeneous Solids

Waste Profile Code:

EPA Code

- D006
- D008
- D011
- F001
- F002

Container Comment

Liner and contents from drum # 10124699 repacked into this container. LB 01/24/2008

Add New Container Comment

Esign Comment

Comment Esig History

Container Information

Container ID: 10242828 | IDC: RF 337 Plastics, Teflon, Washables, PVC | Other IDC: N/A | FGE Limit: .04 grams

Limit is based on historical data if no assay data is present

Overpacked: N | Overpacked Inner Container ID: | Overpack | NCR(0)

Container Type: A drum, 55 Gallon Drum (17H) | FGE: .02 grams

Length: in. Width: in. Height: in. Box Volume: 0 cubic in. | FGE (Error): .01 grams

Repaired Container: N | FRP Type: | FGE + 1 Sigma Error: .03 grams

Crit Exempt:

Gross Weight: 187.43 lbs | Net Weight: 126.43 lbs | Loose Contamination Present: N | Process Code: SC

Fill Factor: 95 % | Waste Volume: gal. | Evidence of Staining: N | Origin Code: TSA-RE

PCB Present? N | Bulged requires venting? N | Offsite Waste? N | Status: INACTIVE

Potential Roaster Oxide: | Items Of Interest | Disposition: FACILITY ACCEPT

Shipping Category:

Current Location: | Pack Date: 05-Jun-1972

WDS Status: APPROVED_CERT

Type of waste/contents description

Waste Type Code	LLW	Low-Level Waste
Waste Matrix Code	S5300	Organic Debris
Waste Profile Code		

EPA Code

Container Comment

No data on drum. WT- 188 LBS.

Add New Container Comment

Esign Comment

Comment Esig History

Container Information

Container ID: 10357107 | IDC: RF 760 Pad 1 Cells 1 and 2 RFP Debris | Other IDC: N/A

FGE Limit: 1.77 grams
Limit is based on historical data if no assay data is present

Overpacked: N | Overpacked Inner Container ID: | Overpack | NCR(0)

Container Type: A drum, 55 Gallon Drum (17H)

Length: in. Width: in. Height: in. Box Volume: 0 cubic in.

Repaired Container: N | FRP Type:

Gross Weight: 178.61 lbs | Net Weight: 118.61 lbs | Loose Contamination Present: N

Fill Factor: 85 % | Waste Volume: gal. | Evidence of Staining: N

PCB Present? N | Bulged requires venting? N | Offsite Waste? N

Potential Roaster Oxide: | Items Of Interest

Current Location:

FGE: 1.41 grams
FGE (Error): .18 grams
FGE + 1 Sigma Error: 1.59 grams
Crit Exempt: N
Process Code: SC
Origin Code: TSA-RE
Status: INACTIVE
Disposition: FACILITY ACCEPT
Shipping Category:
Pack Date: 21-Dec-1971
WDS Status: APPROVED_CERT

Type of waste/contents description

Waste Type Code	TRM	Mixed Transuranic Waste
Waste Matrix Code	S5490	Unknown/Other Heterogeneous Debris
Waste Profile Code		

EPA Code

D004
D005
D006
D007
D008

Container Comment

RWINN 27-APR-10 historical not found in wts.

Add New Container Comment

Esign Comment

Comment Esig History

Container Information

Container ID: 10453439 | IDC: RF | 760 | Pad 1 Cells 1 and 2 RFP Debris | Other IDC: N/A

FGE Limit: 5.73 grams
Limit is based on historical data if no assay data is present

Overpacked: | Overpacked Inner Container ID: | Overpack | NCR(0)

FGE: 4.38 grams
FGE (Error): .67 grams
FGE + 1 Sigma Error: 5.06 grams

Container Type: A | drum, 55 Gallon Drum (17H)

Length: in. Width: in. Height: in. Box Volume: 0 cubic in.

Repaired Container: N

FRP Type:

Crit Exempt: N

Gross Weight: 141.12 lbs
Net Weight: 80.12 lbs
Fill Factor: 95 %
Waste Volume: gal.
PCB Present?: N
Bulged requires venting?: N
Potential Roaster Oxide:

Loose Contamination Present: N
Evidence of Staining: N
Offsite Waste?: N

Items Of Interest

Current Location:

Process Code: SC
Origin Code: TSA-RE
Status: INACTIVE
Disposition: FACILITY ACCEPT
Shipping Category:
Pack Date: 27-Dec-1971
WDS Status: APPROVED_CERT

Type of waste/contents description

Waste Type Code	TRU	Tru Waste
Waste Matrix Code	S5490	Unknown/Other Heterogeneous Debris
Waste Profile Code		

EPA Code

- D004
- D005
- D006
- D007
- D008

Container Comment

Add New Container Comment

Esign Comment

Comment Esig History

Container Information

Container ID: BN10515534 | IDC: BN 550 Supercompacted Debris | Other IDC: N/A | FGE Limit: 7.21 grams

Limit is based on historical data if no assay data is present

Overpacked: | Overpacked Inner Container ID: | Overpack | NCR(0)

Container Type: 100 FOR NEW DRUM - 100

Length: in. Width: in. Height: in. Box Volume: cubic in.

Repaired Container: | FRP Type:

Gross Weight: 659.15 lbs | Net Weight: 534.15 lbs | Loose Contamination Present:

Fill Factor: 51 % | Waste Volume: 50.85 gal. | Evidence of Staining:

PCB Present: N | Bulged requires venting: | Offsite Waste: N

Potential Roaster Oxide: | Items Of Interest

Current Location: 636- TSA/RE, PAD 2, EAS x,y,z: 6,4,3

FGE: 5.81 grams

FGE (Error): .70 grams

FGE + 1 Sigma Error: 6.51 grams

Crit Exempt:

Process Code: DS

Origin Code: NEW WASTE

Status: ACTIVE

Disposition: WIPP ACCEPT

Shipping Category:

Pack Date: 04-Apr-2014

WDS Status: APPROVED_CERT

Type of waste/contents description

Waste Type Code	TRM	Mixed Transuranic Waste
Waste Matrix Code	S5490	Unknown/Other Heterogeneous Debris
Waste Profile Code		

EPA Code

Container Comment

Add New Container Comment

Esign Comment

Comment Esig History

Container Information

Container ID: BN10517120 | IDC: BN 550 Supercompacted Debris | Other IDC: N/A

FGE Limit: .40 grams
Limit is based on historical data if no assay data is present

Overpacked: | Overpacked Inner Container ID: | Overpack | NCR(0)

Container Type: 100 FOR NEW DRUM - 100

Length: in. Width: in. Height: in. Box Volume: cubic in.

Repaired Container: | FRP Type:

FGE: .31 grams
FGE (Error): .04 grams
FGE + 1 Sigma Error: .36 grams
Crit Exempt:

Gross Weight: 605.69 lbs | Net Weight: 480.69 lbs | Loose Contamination Present:

Fill Factor: 58 % | Waste Volume: 58.28 gal. | Evidence of Staining:

PCB Present? N | Bulged requires venting: | Offsite Waste? N

Potential Roaster Oxide: | Items Of Interest

Current Location: 636- TSA/RE, PAD 2, EAR x,y,z: 1,4,2

Process Code: DS
Origin Code: NEW WASTE
Status: ACTIVE
Disposition: WIPP ACCEPT
Shipping Category:
Pack Date: 14-Apr-2014
WDS Status: APPROVED_CERT

Type of waste/contents description

Waste Type Code	TRM	Mixed Transuranic Waste
Waste Matrix Code	S5490	Unknown/Other Heterogeneous Debris
Waste Profile Code		

EPA Code

Container Comment

Add New Container Comment

Esign Comment

Comment Esig History

Container Information

Container ID: 10516278 | IDC: BN 508 AMWTP Newly Generated Debris | Other IDC: N/A | FGE Limit: .00 grams

Limit is based on historical data if no assay data is present

Overpacked: | Overpacked Inner Container ID: | Overpack | NCR(0)

Container Type: 55 FOR NEW DRUM - 55

Length: in. Width: in. Height: in. Box Volume: cubic in.

Repaired Container: | FRP Type:

Gross Weight: 52.92 lbs | Net Weight: 26.92 lbs | Loose Contamination Present:

Fill Factor: 65 % | Waste Volume: 35.75 gal. | Evidence of Staining:

PCB Present? N | Bulged requires venting: | Offsite Waste? N

Potential Roaster Oxide: | Items Of Interest

Current Location:

FGE: .00 grams

FGE (Error): .00 grams

FGE + 1 Sigma Error: .00 grams

Crit Exempt: N

Process Code: SC

Origin Code: NEW WASTE

Status: INACTIVE

Disposition: FACILITY ACCEPT

Shipping Category:

Pack Date: 10-Apr-2014

WDS Status: APPROVED_CERT

Type of waste/contents description

Waste Type Code: TRM Mixed Transuranic Waste

Waste Matrix Code:

Waste Profile Code:

EPA Code

D004
D005
D006
D007
D008

Container Comment

Add New Container Comment

Esign Comment

Comment Esig History

Container Information

Container ID: 10516283 | IDC: BN 508 AMWTP Newly Generated Debris | Other IDC: N/A | FGE Limit: .00 grams

Limit is based on historical data if no assay data is present

Overpacked: | Overpacked Inner Container ID: | Overpack | NCR(0)

Container Type: 55 FOR NEW DRUM - 55

Length: in. Width: in. Height: in. Box Volume: cubic in.

Repaired Container: | FRP Type:

Gross Weight: 63.95 lbs | Net Weight: 37.95 lbs | Loose Contamination Present:

Fill Factor: 70 % | Waste Volume: 38.50 gal. | Evidence of Staining:

PCB Present? N | Bulged requires venting: | Offsite Waste? N

Potential Roaster Oxide: | Items Of Interest

Current Location:

FGE: .00 grams

FGE (Error): .00 grams

FGE + 1 Sigma Error: .00 grams

Crit Exempt: N

Process Code: SC

Origin Code: NEW WASTE

Status: INACTIVE

Disposition: FACILITY ACCEPT

Shipping Category:

Pack Date: 11-Apr-2014

WDS Status: APPROVED_CERT

Type of waste/contents description

Waste Type Code: TRM Mixed Transuranic Waste

Waste Matrix Code:

Waste Profile Code:

EPA Code

D004
D005
D006
D007
D008

Container Comment

Add New Container Comment

Esign Comment

Comment Esig History

Container Information

Container ID: 10516315 | IDC: BN 508 AMWTP Newly Generated Debris | Other IDC: N/A | FGE Limit: .00 grams

Limit is based on historical data if no assay data is present

Overpacked: | Overpacked Inner Container ID: | Overpack | NCR(0)

Container Type: 55 FOR NEW DRUM - 55

Length: in. Width: in. Height: in. Box Volume: cubic in.

Repaired Container: | FRP Type:

Gross Weight: 57.33 lbs | Net Weight: 31.33 lbs | Loose Contamination Present:

Fill Factor: 70 % | Waste Volume: 38.50 gal. | Evidence of Staining:

PCB Present? N | Bulged requires venting: | Offsite Waste? N

Potential Roaster Oxide: | Items Of Interest

Current Location:

FGE: .00 grams

FGE (Error): .00 grams

FGE + 1 Sigma Error: .00 grams

Crit Exempt: N

Process Code: SC

Origin Code: NEW WASTE

Status: INACTIVE

Disposition: FACILITY ACCEPT

Shipping Category:

Pack Date:

WDS Status: APPROVED_CERT

Type of waste/contents description

Waste Type Code: TRM Mixed Transuranic Waste

Waste Matrix Code:

Waste Profile Code:

EPA Code

D004
D005
D006
D007
D008

Container Comment

Add New Container Comment

Esign Comment

Comment Esig History

Container Information

Container ID: 10516317 | IDC: BN 508 AMWTP Newly Generated Debris | Other IDC: N/A | FGE Limit: .00 grams

Limit is based on historical data if no assay data is present

Overpacked: | Overpacked Inner Container ID: | Overpack | NCR(0)

Container Type: 55 FOR NEW DRUM - 55

Length: in. Width: in. Height: in. Box Volume: cubic in.

Repaired Container: | FRP Type:

Gross Weight: 59.54 lbs | Net Weight: 33.54 lbs | Loose Contamination Present:

Fill Factor: 75 % | Waste Volume: 41.25 gal. | Evidence of Staining:

PCB Present? N | Bulged requires venting? | Offsite Waste? N

Potential Roaster Oxide: | Items Of Interest

Current Location:

FGE: .00 grams

FGE (Error): .00 grams

FGE + 1 Sigma Error: .00 grams

Crit Exempt: N

Process Code: SC

Origin Code: NEW WASTE

Status: INACTIVE

Disposition: FACILITY ACCEPT

Shipping Category:

Pack Date: 10-Apr-2014

WDS Status: APPROVED_CERT

Type of waste/contents description

Waste Type Code	TRM	Mixed Transuranic Waste
Waste Matrix Code		
Waste Profile Code		

EPA Code

- D004
- D005
- D006
- D007
- D008

Container Comment

Add New Container Comment

Esign Comment

Comment Esig History

Container Information

Container ID: 10516342 | IDC: BN 508 AMWTP Newly Generated Debris | Other IDC: N/A | FGE Limit: .37 grams

Limit is based on historical data if no assay data is present

Overpacked: | Overpacked Inner Container ID: | Overpack | NCR(0)

Container Type: 55 FOR NEW DRUM - 55

Length: in. Width: in. Height: in. Box Volume: cubic in.

Repaired Container: | FRP Type:

Gross Weight: 123.48 lbs | Net Weight: 97.48 lbs | Loose Contamination Present:

Fill Factor: 65 % | Waste Volume: 35.75 gal. | Evidence of Staining:

PCB Present: N | Bulged requires venting: | Offsite Waste: N

Potential Roaster Oxide: | Items Of Interest

Current Location:

FGE: .29 grams

FGE (Error): .04 grams

FGE + 1 Sigma Error: .33 grams

Crit Exempt: N

Process Code: SC

Origin Code: NEW WASTE

Status: INACTIVE

Disposition: FACILITY ACCEPT

Shipping Category:

Pack Date: 11-Apr-2014

WDS Status: APPROVED_CERT

Type of waste/contents description

Waste Type Code: TRM Mixed Transuranic Waste

Waste Matrix Code:

Waste Profile Code:

EPA Code

D004
D005
D006
D007
D008

Container Comment

Add New Container Comment

Esign Comment

Comment Esig History

Exit

Container Information

Container ID: 10516357 | IDC: BN 508 AMWTP Newly Generated Debris | Other IDC: N/A | FGE Limit: .03 grams

Limit is based on historical data if no assay data is present

Overpacked: | Overpacked Inner Container ID: | Overpack | NCR(0)

Container Type: 55 FOR NEW DRUM - 55

Length: in. Width: in. Height: in. Box Volume: cubic in.

Repaired Container: | FRP Type:

Gross Weight: 61.74 lbs | Net Weight: 35.74 lbs | Loose Contamination Present:

Fill Factor: 65 % | Waste Volume: 35.75 gal. | Evidence of Staining:

PCB Present? N | Bulged requires venting: | Offsite Waste? N

Potential Roaster Oxide: | Items Of Interest

Current Location:

FGE: .02 grams

FGE (Error): .00 grams

FGE + 1 Sigma Error: .02 grams

Crit Exempt: N

Process Code: SC

Origin Code: NEW WASTE

Status: INACTIVE

Disposition: FACILITY ACCEPT

Shipping Category:

Pack Date: 10-Apr-2014

WDS Status: APPROVED_CERT

Type of waste/contents description

Waste Type Code: TRM Mixed Transuranic Waste

Waste Matrix Code:

Waste Profile Code:

EPA Code

D004
D005
D006
D007
D008

Container Comment

Add New Container Comment

Esign Comment

Comment Esig History

AMWTP
Advanced Mixed Waste Treatment Project

RPT-TRUW-12, Rev. 24

AMWTP Waste Stream Designations

Advanced Mixed Waste Treatment Project

(Signature on file. See DCR-13424.)

09/02/14
Date

REVISION LOG

Revision Number	Date Approved	Pages Affected	Description of Revision
0	08/27/03	All	DCR-2378-1. Create RPT-12 from EDF-199
1	11/20/03	Various	DCR-2528. Update TRUCONs, add newly created IDC 512 and applicable data, add EPA HWN F003.
2	03/07/05	All	DCR-4022. Revise paragraph following flowchart; edit for clarification.
3	07/12/05	All	DCR-4229. Incorporate IDC information to be consistent with RPT-TRUW-05, Waste Matrix Code Reference Manual.
4	09/13/05	Table 1, Figure 1	DCR-4477. Update Table 1 and Figure 1 to be consistent with RPT-TRUW-05.
5	11/30/05	All	DCR-4666. Incorporate information concerning PCB items shippable to WIPP, characterization data for approved WSPFs, and identification of new waste streams.
6	03/06/06	All	DCR-4822. Incorporate new approved profile, CCP waste streams, retrieval, and to address newly generated waste.
7	07/11/06	All	DCR-4874. Reflect a streamlined approach to using certain project scoping documents (RPTs 05, 06, 07 and 12).
8	08/15/06	Various	DCR-5224. Document recent PCB contamination incidents.
9	07/17/07	All	DCR-6155. Incorporate revision log; annual update to reflect current operations prior to audit.
10	8/27/08	All	DCR-6333. Re-write. Remove MLLW IDCs from Appendix B.
11	07/01/09	Table 6b, Page 41	DCR-7530. Rewrite.
12	08/04/09	Various	DCR-8505. Revise document to include new IDCs to support operations (Add IDCs BN-528, BN-529, BN-536, BN-537). Changed IDC description on BN-520 and BN-521 to be consistent with recent changes noted in RPT-TRUW-05. Update PCB information to include new IDCs managed as PCB waste. Deleted MLLW BN IDCs (i.e., BN-607 through BN-617). Provided clarification.

Revision Number	Date Approved	Pages Affected	Description of Revision
13	03/09/10	Various	DCR-8588. Deleted IN-151 and AW-151 from Appendix A they do not exist in WTS. Remove MX-142 WIPP WSPF HWNs to correct prior cut and paste error. Corrected Section 3.0 (#5 AMWTP Newly Generated IDCs) on page 19 to include BN-501, BN-511, IC-526, IC-603, and BN-616 as PCB regulated. Added IDCs: IC-527, BN-513, BN-514, BN-515, BN-522, BN-538, RF-749, RF-753, RF-754. Clarified PCB language on Appendix A Notes. Changed IDC description in Table A-1 for RF-095, RF-995, RF-337, BN-501, BN-507, BN-509, BN-511, IC-526 and IC-603. Clarified newly generated waste Section 8. Added Notes 20, 21, 22, and 23 in Table A-1 to clarify HWNs and applicable hazardous constituents assignment. Added references for CCP AK summaries. Insert new information relating to recent WIPP approval of BN222 WSP (i.e., RF IDCs: 292, 696/807b, 818 and 820). Made editorial changes.
14	08/02/10	Various	DCR-9295. Table 1: Changed IDC Description for IDC RF-374. Section 7.0: Provided additional clarification within Section 7.0 relating to HWDs. Figure 3: Replaced boxes for IDC RF-832 and MD-330 with RF-336 and RF-330, and corrected WMC S5330 to S5300. Section 9.0: Added references 96–114. Table A-1: Add new IDCs: GV-222, BN-518, BN-538, BN-550, IC-150, IC-151, IW-526, IW-527, IW-603, LL-212, LL-213, LL-221, RL-712, RL-714, and RL-716. Changed Waste Description for IDCs: BN-520, BN 521, AW-160, AW-164, AW-165, AW-167, NT 211, NT-212, NT-213, RF-374. Added new constituents for IDCs: BN-507, BN-514, BN-520, AW-165, AW-167, IC-526, IC-527, IC-603, SD-704, RF-760. Deleted IDCs: AW-142. Added footnotes 24, 25, and 26. Added missing IDC RF-303. Table A-2: Added new generator site codes: GV, LL, and RL.

Revision Number	Date Approved	Pages Affected	Description of Revision
15	11/03/10	Text and Appendix A	DCR-9523. Modified BN-508 HWNs to accommodate new BN510.1 WSPF list of HWNs and applicable references. Deleted Note 26 from BN-520. Deleted Note 25 from BN-508. Deleted Note 25 from BN-521. Deleted Note 26 as a reference to Appendix A. Added information on beryllium in Appendix A for supercompacted-related IDCs. Changed Section 7.1 to include RPT-TRUW-83 and BN510.1 WSPF and to clarify that BN510 feedstock inventory will not be included into BN510.1 WSPF. Added BN510.1 information to Table 4. Section 8.0: last paragraph add BN510.1 and references. Deleted footnote f. References: added reference #s 115 and 116.
16	03/03/11	2, 6, 10, 15, 16, A107 – A110	DCR 9720: Modified language to incorporate new WIPP definition of a waste stream, Add three new IDCs to WSPFs BNINW216 and one IDC to BN004 as a result of WIPP approval of change notices (i.e., RF-741, RF-742 and RF-744). Added IDCs: BN-534, IC-157 and IW-525. Updated Appendix A. Modified notes to Appendix A as needed. General editorial changes.
17	07/19/11	Various	DCR-10076. General grammar/editorial changes. Added IDCs: BN-550, RL-712, RL-714 and RL-716 to Table 1. Added new PCB IDCs BN-523 and IW-526 to PCB section. Deleted Section 7.2, AMWTP Retrieved Wastes/Repackaged Retrieved Wastes, including Figure 3, Example of the delineation scheme for supercompacted waste stream. Added References 123 through 143. Appendix A: Deleted blank rows. Moved ID/AW, BW and BX to alphabetic listing. Added IC-525 (P/U listed HWNs) and IC-602 (P/U listed HWNs). Added proposed (forthcoming) IDCs BN-523, BN-524 and BN-600. Added IDCs: AE-254, BN-519, BN-539, BN-607 through BN-617, IC-021, IC-152, IC-156, and IC -601. Added off-site cored waste IDCs LA-002, LA-003, LA-005, LA-006, LB-229, OR-250, RL-715, RL-720, SL-223, SL-224, SL-227, SR-251, SR-252, SR-253 and SR-835. Deleted IDCs: AW-156, AW-157, IW-525 and IW-602. Added hazardous constituents and HWNs as applicable.

Advanced Mixed Waste Treatment Project
AMWTP Waste Stream Designations

Revision Number	Date Approved	Pages Affected	Description of Revision
18	8/31/11	Various	Added BN600 WSPF information. Added new PCB IDCs (IW-526, BN-526, BN-597, BN-603 and BN-598) Added new references 145 through 150 Added new IDCs to Appendix A (AE-230, AW-225, BN-525, BN-526, BN-527, BN-597, BN-598, BN-599, BN-602, BN-603 and SR-842. Added references to IW-526, IW-527 and IW-603 Added Note 25
19	11/13/12	Various	DCR-10552. Deleted mention of RPT-LLW-12 on pages 1 and 2. Replaced reference 107 with TRUW-8.13. Added in refs 150 through 166. Changed various BN IDCs and constituent information. Changes made to IDC 807a and 807b. Added IDCs and information for Argonne East; added IDCs for INL exhumed SDA wastes. Deleted prior footnote 14 and renumbered footnotes. Added footnotes 20 and 21. Other routine updates. Changed IDCs IW-176 through 179 to SD-176 through 179.
20	05/22/13	Various	DCR 11951. Various editorial changes and updates. Updated Tables and Figures. Changed Section 3.0 for PCB IDCs. Modified Figure 1. Added references 167-179. Complete revision/update of Appendix A information. (e.g., removed repetitive references associated with individual constituents for IDCs to prevent document corruption). Updated Notes: 2, 3, 8, 10, 13, and 20. Add Notes 22 and 23. Document considered a rewrite.
21	09/26/13	Various	DCR-12475. Made changes to support EPA Tier 1 change and to support the processing of LANL debris waste into the Supercompactor. Added IDCs LA-007 through LA-010 as appropriate. Added hazardous constituents and HWNs as appropriate. Deleted CW-600. Added references as needed. Changed Appendix A as needed.
22	11/21/13	Various	DCR-12885. Incorporated changes to support the addition of Pre-1980 SDA debris wastes to the Supercompactor as approved feedstock material.

Revision Number	Date Approved	Pages Affected	Description of Revision
23	04/15/14	Various	DCR-13004. Entire document revised (no revision bars) to make document consistent with current operations. General changes include, but are not limited to, reorganizing Sections 1.0 through 7.0, adding acronyms, updating Table 1 to include MFC/Argonne West and LANL waste IDCs, Adding IDC CW-216 to PCB section and to Appendix A, updating and adding references as needed and re-organization of some information. Divided the table in Appendix A into stand-alone tables for each generator. Updated IDC BN-550 and BN-600 to address LANL input to S/C; updated/corrected IDC information within Appendix A; updated INL IDCs to reflect information in AMWTP INL baseline document (RPT-TRUW-92); deleted IC-525; revised MD debris IDCs to general reference to MD-801 (where applicable) to support document stability; merged RF-300 graphite information and updated/ added notes in Appendix A. Periodic review.
24	09/02/14	Various	Performed routine updates as needed. Updated Table 2. Updated Table 5. Updated Section 9 references, added ref 207 and 208. Reorganized, updated, and clarified Appendix A. Made corrections to HWNs/constituents and updated LANL IDCs. Added IDCs: BN-770, IA-021, IA-150, IA-152, IA-153, IA-154, IA-155, IC-153, IC-154, IC-604, IC-605, IC-606, IC-607, IF-021, IF-152, IF-153, IF-154, IF-155, IN-150, IN-154, IP-021, IP-150, IP-152, IP-153, IP-154, IP-155, IP-157, IR-152, IR-153, IT-150, IT-153, IT-154, IT-155, IW-150, IW-152, IW-153, IW-154, IW-176, IW-177, IW-178, RF-752, and SD-703. Added petroleum ether (naptha) to IDC AE-100 list of constituents. Correct transcription error for RF-480 (removed F002 HWN for carbon tet). Added "See Note 2" to F003 HWN applicable locations in appendix tables for consistency. Clarified Appendix A notes and added Note 30.

CONTENTS

ACRONYMS xi

1.0 INTRODUCTION 1

2.0 ASSIGNMENT OF SUMMARY CATEGORY GROUPS, WASTE MATRIX CODE GROUPS, AND WASTE MATRIX CODES 5

2.1 S3000 – Homogeneous Solids 5

2.2 S4000 – Soils/Gravel 6

2.3 S5000 – Debris Wastes 6

2.4 Approach for Assigning IDCs, WMCGs, and WMCs 6

3.0 AMWTP WASTE STREAMS 14

3.1 Characterization 15

4.0 AMWTP RETRIEVED HOMOGENEOUS SOLID WASTE 21

4.1 AMWTP Homogeneous Solids Wastes 21

5.0 AMWTP RETRIEVED SOIL/GRAVEL WASTE 22

6.0 AMWTP RETRIEVED DEBRIS WASTE 23

6.1 AMWTP Direct-Shipped Debris Waste 23

7.0 AMWTP NEWLY GENERATED WASTE 25

7.1 AMWTP Debris Waste 26

8.0 SUMMARY 27

9.0 REFERENCES 28

Appendix A – Chemical Constituents and HWNs Identified in TRU Waste A1

FIGURES

Figure 1. General document hierarchy and information flow for AK. 3

Figure 2. General examples of SCGs, WMCGs, and WMC assignment/grouping diagram. See DOE treatability group guidance for full list of potential WMCs. 9

TABLES

Table 1. Generator site and area acronyms. 7

Table 2. AMWTP WMCG and WMC classification for waste included in WIPP-approved WSPFs 10

Table 3. Homogeneous solids waste streams (S3000). 22

Table 4. Retrieved direct-ship debris waste streams (S5000). 24

Table 5. AMWTP WIPP-Approved Newly Generated Debris (S5000) WSPF 27

Table A-1. Argonne National Laboratory – East (AE) hazardous constituents, chemical properties, or hazardous items identified in TRU waste. A4

Table A-2. Argonne National Laboratory – West (AW) hazardous constituents, chemical properties, or hazardous items identified in TRU waste. A7

Table A-3. Battelle Columbus (BC) hazardous constituents, chemical properties, or hazardous items identified in TRU waste. A11

Table A-4. Bettis Atomic Power Laboratory (BL) hazardous constituents, chemical properties, or hazardous items identified in TRU waste. A12

Table A-5. AMWTP (BN) hazardous constituents, chemical properties, or hazardous items identified in TRU waste. A13

Table A-6. Babcock and Wilcox hazardous constituents, chemical properties, or hazardous items identified in TRU waste. A22

Table A-7. Bendix (BX) hazardous constituents, chemical properties, or hazardous items identified in TRU waste. A22

Table A-8. INL CH2M-WG (CW) hazardous constituents, chemical properties, or hazardous items identified in TRU waste. A23

Table A-9. General Electric Vallecitos (GV) hazardous constituents, chemical properties, or hazardous items identified in TRU waste. A23

Table A-10. INL Auxiliary Reactor Area (IA) hazardous constituents, chemical properties, or hazardous items identified in TRU waste. A23

Table A-11. INL INTEC (IC) Hazardous constituents, chemical properties, or hazardous items identified in TRU waste. A24

Table A-12. Idaho National Laboratory (ID) hazardous constituents, chemical properties, or hazardous items identified in TRU waste. A25

Table A-13. INL – Central Facilities Area (IF) hazardous constituents, chemical properties, or hazardous items identified in TRU waste. A28

Table A-14. INL – Naval Reactors Facility (IN) hazardous constituents, chemical properties, or hazardous items identified in TRU waste. A29

Table A-15. INL – Critical Infrastructure Test Range Complex (IP) hazardous constituents, chemical properties, or hazardous items identified in TRU waste. A29

Table A-16. INL – Test Reactor Area (IR) hazardous constituents, chemical properties, or hazardous items identified in TRU waste. A30

Table A-17. INL – Test Area North (IT) hazardous constituents, chemical properties, or hazardous items identified in TRU waste. A30

Table A-18. INL – Radioactive Waste Management Complex (IW) hazardous constituents, chemical properties, or hazardous items identified in TRU waste. A31

Table A-19. J. C. Haynes (JH) hazardous constituents, chemical properties, or hazardous items identified in TRU waste. A32

Table A-20. Los Alamos National Laboratory (LA) hazardous constituents, chemical properties, or hazardous items identified in TRU waste. A32

Table A-21. Lawrence Berkeley National Laboratory (LB) hazardous constituents, chemical properties, or hazardous items identified in TRU waste. A37

Table A-22. Lawrence Livermore/Los Alamos (LL/LA) hazardous constituents, chemical properties, or hazardous items identified in TRU waste. A37

Table A-23. Lawrence Livermore (LL) hazardous constituents, chemical properties, or hazardous items identified in TRU waste. A37

Table A-24. Mound Laboratory (MD) hazardous constituents, chemical properties, or hazardous items identified in TRU waste. A38

Table A-25. Monsanto (MO) hazardous constituents, chemical properties, or hazardous items identified in TRU waste. A42

Table A-26. Mexico (MX) hazardous constituents, chemical properties, or hazardous items identified in TRU waste. A42

Table A-27. Nuclear Radiation Development (ND) hazardous constituents, chemical properties, or hazardous items identified in TRU waste. A43

Table A-28. Nevada Test Site (NT) hazardous constituents, chemical properties, or hazardous items identified in TRU waste. A44

Table A-29. Oak Ridge National Laboratory (OR) hazardous constituents, chemical properties, or hazardous items identified in TRU waste. A44

Table A-30. Rocky Flats Plant (RF) hazardous constituents, chemical properties, or hazardous items identified in TRU waste. A45

Table A-31. Hanford (RL) hazardous constituents, chemical properties, or hazardous items identified in TRU waste. A96

Table A-32. INL – Subsurface Disposal Area (SD) hazardous constituents, chemical properties, or hazardous items identified in TRU waste. A99

Table A-33. Sandia National Laboratory – East (SL) hazardous constituents, chemical properties, or hazardous items identified in TRU waste. A101

Table A-34. Hazardous constituents, chemical properties, or hazardous items identified in Savannah River Site (SR) TRU waste. A101

Table A-35. Notes applicable to Tables A-1 through A-34 ..... A102

ACRONYMS

AE	Argonne National Laboratory-East (generator site code)
AK	acceptable knowledge
AKR	Acceptable Knowledge Resolution
AMWTP	Advanced Mixed Waste Treatment Project
ANL-E	Argonne National Laboratory-East
ANL-W	Argonne National Laboratory-West
ARP	Accelerated Retrieval Project
ATR	Advanced Test Reactor
AW	Argonne National Laboratory-West (generator site code)
B&W	Babcock &Wilcox
BC	Battelle Columbus (generator site code)
BL	Bettis Atomic Power Laboratory (generator site code)
BN	AMWTP (generator site code)
BNFL	British Nuclear Fuels Limited
BW	Babcock & Wilcox (generator site code)
BX	Bendix-Grand Junction Operation Office (generator site code)
CAS	Chemical Abstract Service
CBFO	Carlsbad Field Office
CCP	Central Characterization Project
CFA	Central Facilities Area
CFR	Code of Federal Regulations
CH	Contact-Handled
CPP	Chemical Processing Plant
CW	CH2M-WG Idaho, LLC (generator site code)
CWI	CH2M-WG Idaho, LLC
DOE	United States Department of Energy
EDF	engineering design file
EDMS	Electronic Document Management System
EPA	Environmental Protection Agency
FLAMGAS	flammable gas
GEN	generator
GGT	gas generation testing
HLW	high-level waste
HWD	hazardous waste determination
HWMA	Hazardous Waste Management Act
HWN	Hazardous Waste Number
HSG	headspace gas

IC	INL Idaho Nuclear Technology and Engineering Center (formerly called Chemical Processing Plant; generator site code)
ICPP	INL Idaho Chemical Processing Plant
ID	Idaho National Laboratory (generator site code)
IDC	item description code
IF	INL Central Facilities Area (generator site code)
IN	INL Naval Reactor Facility (generator site code)
INL	Idaho National Laboratory
IR	INL Reactor Technology Complex (formerly called Test Reactor Area; generator site code)
IW	INL Radioactive Waste Management Complex (generator site code)
IWTS	integrated waste tracking system
JH	J. C. Haynes (generator site code)
LA	Los Alamos National Laboratory (generator site code)
LANL	Los Alamos National Laboratory
LL	Lawrence Livermore National Laboratory (generator site code)
LLNL	Lawrence Livermore National Laboratory
LLW	low-level waste
MD	Mound Laboratories (generator site code)
MFC	Materials Fuel Complex
MLLW	mixed low-level waste
MO	Monsanto-Dayton Laboratory (generator site code)
MX	^{241}Am waste from a smoke detector manufacturing company in Mexico (generator site code)
NDA	nondestructive assay
NRF	Naval Reactor Facility
NT	Nevada Test Site (generator site code)
NNSS	Nevada National Security Site
OASIS	Organic and Sludge Immobilization System
PCB	polychlorinated biphenyl
PK	process knowledge
PPE	personal protective equipment
ppm	parts per million
RCRA	Resource Conservation and Recovery Act
RF	Rocky Flats Plant (generator site code)
RH	remote handled
RL	Richland, Washington Hanford Site (generator site code)
RTR	real-time radiography
RWMC	Radioactive Waste Management Complex
SCG	Summary Category Group
SD	INL Subsurface Disposal Area (generator site code)
SDA	Subsurface Disposal Area

SNF	spent nuclear fuel
SR	Savannah River (generator site code)
SRS	Savannah River Site
TAN	Test Area North
TBD	to be determined
TCA	1,1,1-trichloroethane
TCE	trichloroethylene
TRA	Test Reactor Area
TRU	transuranic
TSA	Transuranic Storage Area
TSCA	Toxic Substances Control Act
VE	visual examination
WAC	Waste Acceptance Criteria
WAP	Waste Analysis Plan
WIPP	Waste Isolation Pilot Plant
WMC	waste matrix code
WMCG	Waste Matrix Code Group
WS	waste stream
WSP	waste stream profile
WSPF	Waste Stream Profile Form
WTS	Waste Tracking System

1.0 INTRODUCTION

The Advanced Mixed Waste Treatment Project (AMWTP) retrieves, characterizes, and packages transuranic (TRU) wastes for disposal at the Waste Isolation Pilot Plant (WIPP). The United States Department of Energy (DOE) originally identified an estimated 65,000 cubic meters (i.e., legacy waste) that require characterization for disposal at WIPP. The majority of the legacy waste inventory was originally generated at the following DOE facilities: Idaho National Laboratory (INL),[a] Battelle Columbus (BC), Bettis Atomic Power Laboratory (BL), Argonne National Laboratory – East, Mound Laboratories (MD), and Rocky Flats Plant (RF).

In addition to the legacy waste inventory, minor contributions of legacy and non-legacy wastes have been or may be received from other offsite locations such as (but not limited to) Los Alamos National Laboratory (LANL), Savannah River Site (SRS), Bendix-Grand Junction Operation Office (BX), Hanford (RL), Monsanto-Dayton Laboratory (MO), Nevada National Security Site (NNSS), Lawrence Livermore National Laboratory (LLNL), J. C. Haynes (JH),[b] a Mexican smoke detector manufacturer (contributed ^{241}Am wastes), and Babcock and Wilcox (B&W).

The AMWTP also generates TRU-contaminated newly generated waste (i.e., BN) as a result of retrieval, characterization, storage, processing/treatment, and/or repackaging. AMWTP newly generated wastes are assigned the BN acronym in order to identify the generator of the wastes as AMWTP.

This report is to be used for TRU wastes and includes, but is not limited to, waste classification schemes, the identification of WIPP assigned hazardous waste numbers (HWNs), and the identification of waste material (by item description codes [IDCs] associated with WIPP-approved waste stream profile forms [WSPFs]) covered under the current AMWTP scope of work).

Appendix A summarizes available acceptable knowledge (AK) associated with hazardous waste constituents for TRU IDCs that are profiled to WIPP by AMWTP personnel and, when available, AMWTP newly generated waste characterization information. The information in Appendix A is subject to change when additional AK, process knowledge (PK), or additional characterization is received. Appendix A will be revised as necessary to reflect finalized HWNs and/or changes to waste stream designations for TRU waste. WIPP HWNs within this document are evaluated and assigned through an initial AK evaluation. This information is augmented by real-time radiography and/or visual examination (RTR/VE). (107, 202, 203, 204)

At a minimum, all accessible and retrievably stored TRU wastes are managed as mixed waste unless final characterization results reflect a non-hazardous status.

---

a. Includes: INL Argonne-West/Materials Fuel Complex (AW/MFC); INL Radioactive Waste Management Complex (RWMC); Auxiliary Reactor Area; INL Idaho Chemical Processing Plant (ICPP); INL Naval Reactor Facility (NRF); INL Test Reactor Area (TRA); Test Area North (TAN); INL Central Facilities Area (CFA); INL subsurface disposal area; and waste from various INL CH2M-WG Idaho, LLC (CWI) operations.

b. An Ohio businessman that irradiated diamonds with ^{241}Am.

Low-level waste (LLW) and mixed low-level waste (MLLW) that cannot be disposed at WIPP are characterized and profiled by AMWTP LLW/MLLW organizations and not by the AMWTP TRU program. Wastes not destined for disposal at WIPP are not subject to WIPP characterization requirements and may require offsite treatment prior to disposal. LLW/MLLW characterization and profile development are conducted through applicable LLW/MLLW Programs requirements and in accordance with the receiving facility's offsite waste stream profile (WSP) approval processes. Final LLW/MLLW characterization results may differ from the determinations noted in Appendix A due to differences in the offsite receiving facility's waste acceptance criteria (WAC) and/or whether the waste undergoes AMWTP waste processing/treatment prior to offsite shipment.[c]

TRU waste destined for disposal at WIPP is characterized on a waste-stream basis as described by the WIPP Waste Analysis Plan (WAP) and the AMWTP implementing documents MP-TRUW-8.1, Certification Plan for INL Transuranic Waste, and MP-TRUW-8.2, Quality Assurance Project Plan. (See Section 3.0)

Figure 1 (below) presents the general document hierarchy and information flow for AK documents into the AK record.

c. See the LLW/MLLW off-site program coordinator for LLW/MLLW characterization determinations.

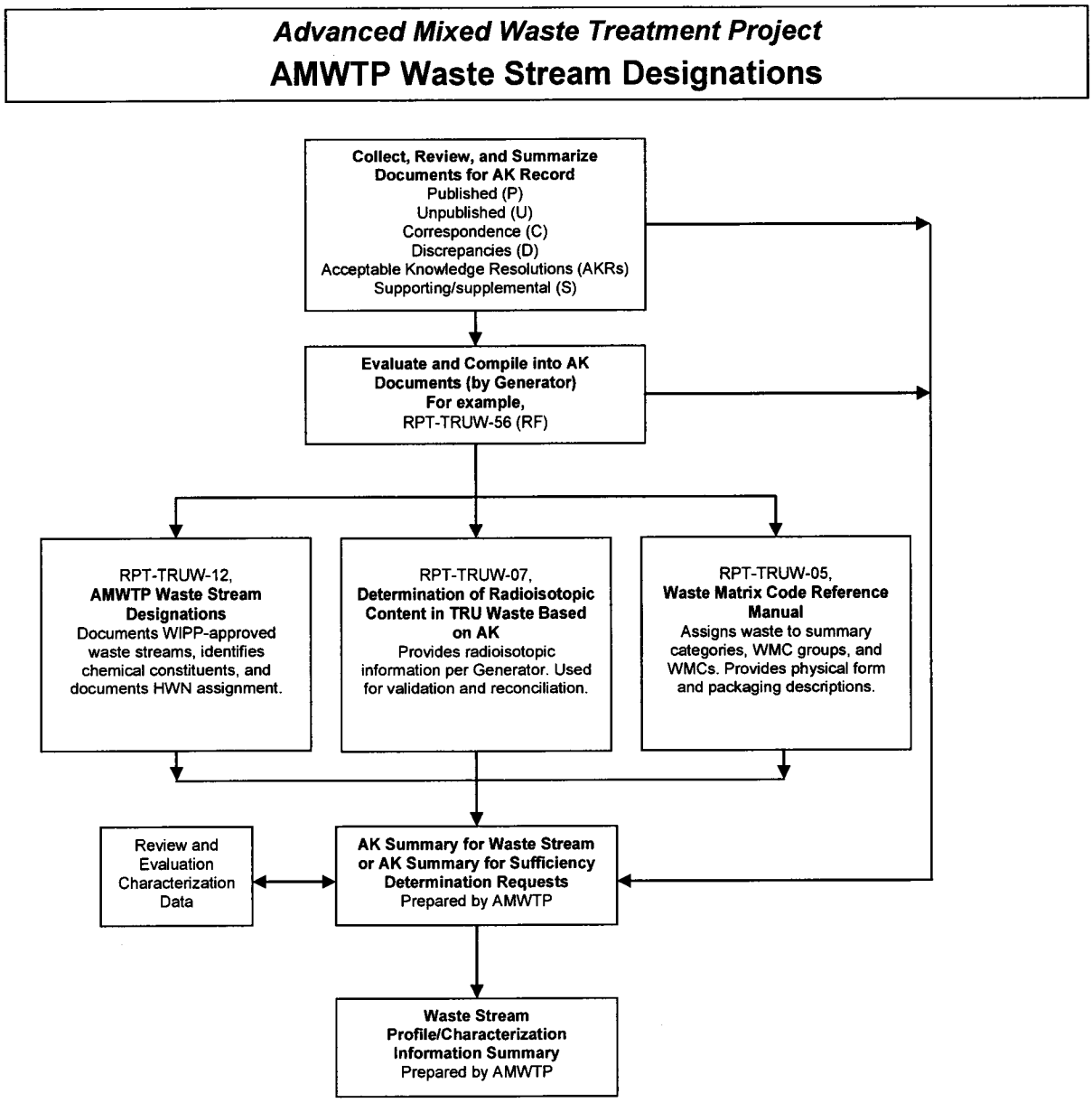

Figure 1. General document hierarchy and information flow for AK.

The following sections of this report address current AMWTP WSPFs. The sections are organized by Summary Category Group (SCGs) with an additional Section 7.0 to present the approach to the AMWTP newly generated waste.

- Section 4.0, AMWTP Retrieved Homogeneous Solid Waste (SCG S3000)
- Section 5.0, AMWTP Retrieved Soil/Gravel Waste (SCG S4000)
- Section 6.0, AMWTP Retrieved Debris Waste (SCG S5000)
- Section 7.0, AMWTP Newly Generated Waste.[d]

Also included in this document is Appendix A, Chemical Constituents and HWNs identified in TRU Waste. The tables in Appendix A provide available AK and WIPP characterization information about chemical constituents and HWN assignments for TRU wastes currently stored/treated at the AMWTP. The Appendix A determinations are based on documents and other information received by AK and/or WIPP WAP sampling results. The information in Appendix A is used to support safe storage and treatment of TRU waste and for AMWTP WIPP waste profiling.

The following sources of information and characterization activities were/are used to identify applicable hazardous constituents, chemical properties, polychlorinated biphenyl (PCB) classification, and/or HWNs assigned to waste IDCs prior to and during WIPP profile development:

1. Review of existing AMWTP AK documents
2. RTR/VE augmentation information
3. Engineering Design File (EDF)-803, Chemical Constituents in Transuranic Storage Area (TSA) Waste
4. AMWTP Offsite coordinators (e.g., Form-1900, AMWTP Offsite Waste Stream Profile, and/or other correspondences)
5. AK documents received directly from legacy waste generators
6. Miscellanous INL databases
7. Central Characterization Project (CCP) personnel/AK documentation
8. AMWTP Waste Services[e]

d. Section 7.0 presents the general AMWTP approach for newly generated waste management.

e. For example, HWDs and supporting information for newly generated waste are maintained by AMWTP Waste Services and incorporated into the AK record during WIPP profiling.

9. CWI

10. Other INL or AMWTP operational personnel

11. AK/PK associated with treatment activities (e.g., supercompaction, liquid absorption).

In some cases, prior HWNs may have been conservatively assigned based on headspace gas (HSG) detections and/or may have been assigned due to regulatory requirements prior to mid 1990s (e.g., assigning the F003 HWN for non-ignitable waste containing F003 constituents). Generator-assigned characteristic HWNs or waste that was previously assigned the F003 HWN may differ from the final AMWTP HWNs assigned in WIPP profiles. The removal of prior generator-assigned characteristic-based HWNs may be due to AMWTP treatment of the characteristic property (e.g., absorption, compacting) and/or repackaging (e.g., removal of prohibited items) prior to shipment. As a result, the HWNs initially assigned may not be retained.[f] Justification for not retaining an HWN that was previously identified by the original generator or within a prior WIPP profile is documented according to MP-TRUW-8.13, Collection, Review, and Management of Acceptable Knowledge Documentation.(107)

Final WIPP hazardous waste constituents and HWNs are formally included within this document after the AMWTP receives WIPP-approval for the submitted WSPF.

2.0 ASSIGNMENT OF SUMMARY CATEGORY GROUPS, WASTE MATRIX CODE GROUPS, AND WASTE MATRIX CODES

Wastes are delineated prior to WIPP profiling based on AK and placed into one of three broad physical form categories. The three broad physical form categories are referred to as SCGs. The three SCGs are:

1. Homogeneous Solids (S3000)

2. Soils/Gravel (S4000)

3. Debris Wastes (S5000).

If a waste does not contain at least 50% by volume of a SCG the waste is characterized based on the summary category constituting the greatest volume of waste.

2.1 S3000 – Homogeneous Solids

SCG S3000 is composed of waste that is primarily homogeneous solids. Homogeneous solids are defined as solid materials, excluding soil, that do not meet the New Mexico Environment Department criteria for classification as debris. The waste within this SCG

f. For example, in accordance with the current Hazardous Waste Management Act (HWMA)/Resource Conservation and Recovery Act (RCRA) regulatory framework [i.e., 40 CRF.261. 4(3)(g)(1)], wastes with a D001, D002, D003, or F003 HWN originally assigned by an initial generator may not apply to the final waste form being shipped to WIPP due to treatment/removal of characteristic properties.

includes, but is not limited to, inorganic process residues, inorganic sludge, salt waste, and pyrochemical salt waste. Other waste streams are included in this SCG based on the specific waste stream types and final waste form. This SCG is expected to contain toxic metals and spent solvents. This SCG includes wastes that are at least 50% by volume homogeneous solids.

2.2 S4000 – Soils/Gravel

SCG S4000 is defined as waste that is composed primarily of soil and/or gravel. This SCG includes waste streams that are at least 50% by volume soil/gravel. This SCG is expected to contain spent solvents and toxic metals.

2.3 S5000 – Debris Wastes

For TRU wastes, SCG S5000 is defined as heterogeneous waste that is at least 50% by volume debris. Debris means solid material exceeding a 2.36 inch (60 millimeter) particle size that is intended for disposal and that is: [99]

1. A manufactured object
2. Plant or animal matter
3. Natural geologic material.

Particles smaller than 2.36 inches in size may be considered debris if the debris is a manufactured object, and if it is not a particle of S3000 or S4000 material.

The waste in this SCG includes, but is not limited to glass, rubber, cellulosic, ceramic, wood, paper/rags, graphite, metal, and plastic debris waste. This SCG may contain spent solvents and toxic metals.

2.4 Approach for Assigning IDCs, WMCGs, and WMCs

The overall general approach for assigning IDCs, waste matrix code groups (WMCGs), and waste matrix codes (WMCs) is discussed below.

Each TRU waste managed at the AMWTP is identified by a unique IDC. Initially, the AMWTP classifies each IDC rather than individual containers and assigns an appropriate SCG, WMCG, and WMC based on guidance established in the DOE Waste Treatability Group Guidance document and the WIPP WAP. [52, 53, 108], g

Most of the AMWTP legacy wastes were previously assigned an IDC by the INL. Where an IDC was not assigned to waste by the original generator (e.g., pre-1971 wastes from RF), the AMWTP assigns an IDC. [108]

The IDC (or temporary IDC) contains a two-letter generator code (see Table 1), which identifies the generator (or unknown/undetermined status), and a three-digit numerical code.

g. RTR and VE are also used to identify the presence of prohibited items/conditions within the waste and to augment AK.

Combined, the generator code and the three-digit number form a unique IDC that identifies a specific type of waste generated at a specific facility. (108)

Table 1. Generator site and area acronyms.

Gen Site	Area	Description
AE	—	Argonne National Laboratory-East
BC	—	Battelle Columbus Laboratory
BL	—	Bettis Atomic Power Laboratory
BW	—	Babcock and Wilcox
BX	—	Bendix-Grand Junction Operation Office (M&O Contractor)
GV	—	General Electric Vallecitos Nuclear Center
ID	AW	Argonne National Laboratory-West [currently identified as Materials and Fuels Complex (MFC)]
ID	BN	INL Advanced Mixed Waste Treatment Facility (formerly called British Nuclear Fuels Limited [BNFL])
ID	CW	CH2M-WG Idaho, LLC
ID	IA	INL Auxiliary Reactor Area
ID	IC	INL Idaho Nuclear Technology and Engineering Center (formerly called Chemical Processing Plant [CPP])
ID	IF	INL Central Facilities Area
ID	IN	INL Naval Reactor Facility
ID	IP	INL Power Burst Facility
ID	IR	INL Reactor Technology Complex (formerly called Test Reactor Area)
ID	IT	INL Test Area North
ID	IW	INL Radioactive Waste Management Complex
ID	SD	INL RWMC Subsurface Disposal Area
JH	—	J. C. Haynes, Ohio businessman who irradiated diamonds with ^{241}Am
LA	—	Los Alamos National Laboratory
LB	—	Lawrence Berkeley National Laboratory
LL	—	Lawrence Livermore National Laboratory
MD	—	Mound Laboratory
MO	—	Monsanto-Dayton Laboratory
MX	—	^{241}Am waste from a smoke detector manufacturing company in Mexico
ND	—	Nuclear Radiation Development, LLC
NT	—	Nevada Test Site
OR	—	Oak Ridge National Laboratory
RF	—	Rocky Flats Plant
RL	—	Hanford
SL	—	Sandia National Laboratories
SR	—	Savannah River Site

For example, the IDC RF-004 is described as a Rocky Flats solidified inorganic sludge, and is further classified under the homogeneous solids (S3000) SCG.

The S3000 SCG is split into two subgroups: (1) the inorganic subgroup and (2) the organic subgroup.

The inorganic subgroup (S3100) contains two WMCGs (salt wastes and solidified inorganics), but the organic subgroup (S3200) contains only a single WMCG (solidified organics).

For example, the IDC RF-004 mentioned above is classified under the Rocky Flats homogeneous solids (S3000) SCG and further classified as a solidified inorganic waste.

The wastes are further assigned an applicable WMC in accordance with guidance associated with the DOE Treatability Guide and the WIPP WAP. [52, 53, 108] The WMC is used to identify the expected waste matrix (physical form) that makes up the majority of the waste material in each container. Waste matrix codes were developed by DOE in response to the Federal Facilities Compliance Act [54] as a method to aid in categorizing DOE TRU mixed waste streams. A WMC consists of a series of five-character alphanumeric codes and descriptors that represent different physical/chemical matrices (e.g., S3121, homogeneous solids, wastewater treatment sludge). The first position is a letter that denotes the physical form of the waste (L for liquid, S for solid, etc.). The next position denotes whether the waste is homogeneous solids, soil, or debris (S3000 is homogeneous solids waste, S4000 is soil/gravel, and S5000 is debris waste), and the last three positions denote more specific categories (e.g., specific type of homogeneous solids [sludge, salt, etc.], soil/gravel, or debris [plastic, light metal, etc.]).

Based on the above, the waste associated with IDC RF-004 is assigned a WMC of S3150 by the AMWTP in accordance with guidance associated with the DOE Treatability Guide and WIPP WAP. [52, 53, 108]

Wastes with a WMC of S9000 and/or an IDC of UN-000 or PC-000 are classified as having an undetermined waste form and are further classified as "Resource Conservation and Recovery Act (RCRA)/ Hazardous Waste Management Act (HWMA) unknowns" per the AMWTP HWMA/RCRA permit. [15] Until a final WMC and IDC are assigned, these types of wastes are subject to special handling and notification requirements as required by the AMWTP HWMA/RCRA permit.

Examples of SCGs, WMCGs, and WMCs are depicted in Figure 2.

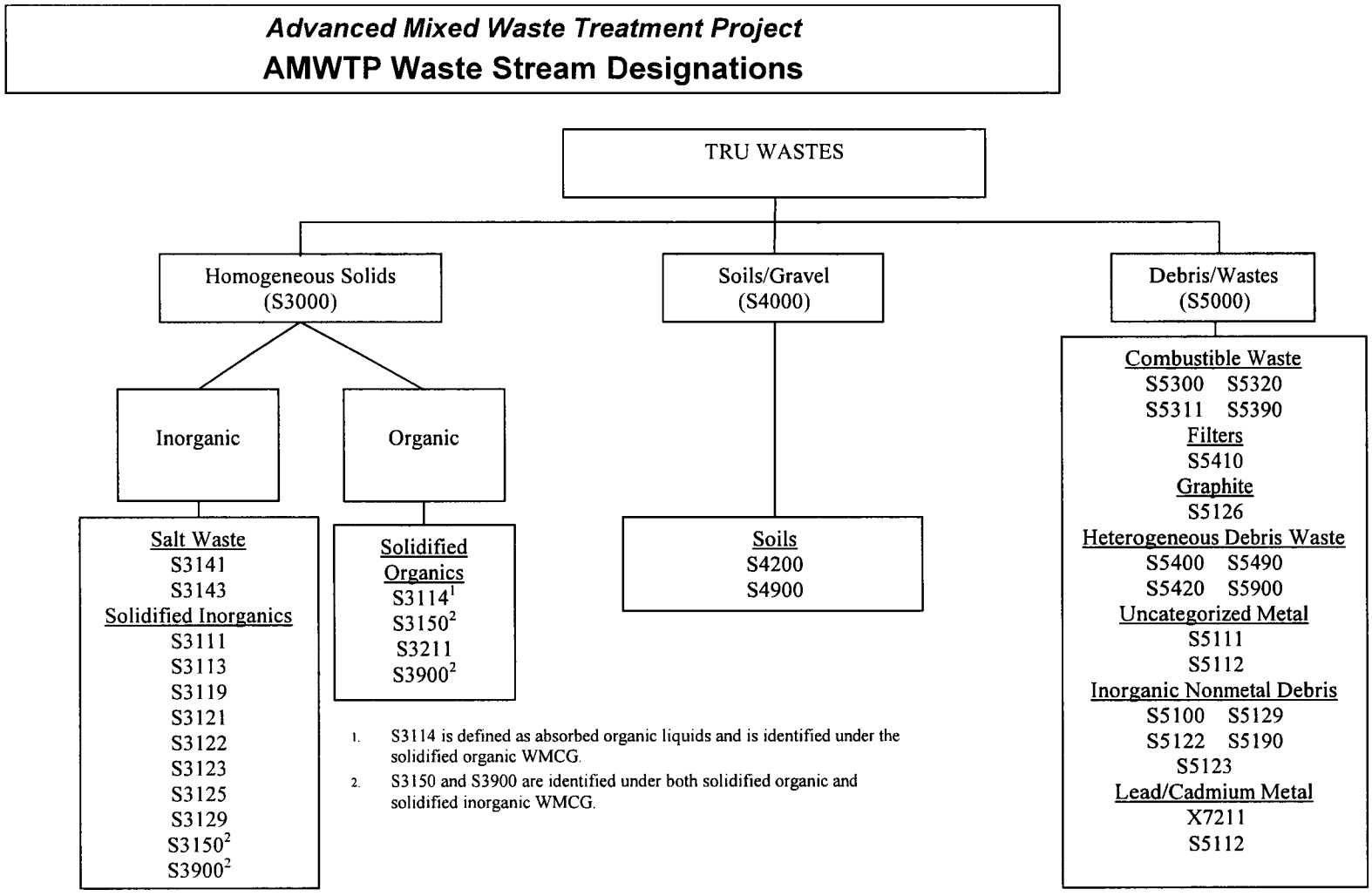

Figure 2. General examples of SCGs, WMCGs, and WMC assignment/grouping diagram. See DOE treatability group guidance for full list of potential WMCs.

The TRU Program's list of SCGs, WMCGs, WMCs, and IDCs for TRU wastes that have been included in AMWTP WIPP-approved direct ship WSPFs or are fed to the supercompacted WSPF are presented in Table 2.

Table 2. AMWTP WMCG and WMC classification for waste included in WIPP-approved WSPFs.

S3000 Homogeneous Solids (SCG)					
	S3100 Inorganic Homogeneous Solids (SCG subgroup)				
	WMCs	**WMC Description**	**GEN IDC Prefix[b]**	**IDC**	**IDC Description**
WMCG Solidified Inorganics	S3113	Inorganic Particulate Absorbents	MD	834	High Level Acid
			MD	835	High Level Caustic
	S3121	Wastewater Treatment Sludges	MD	836	High Level Sludge/Cement
			RF	001	First Stage Sludge
			RF	002	Second Stage Sludge
			RF	007	Building 374 Dry Sludge
			RF	741	Pits 11 and 12 First Stage Sludge
			RF	742	Pits 11 and 12 Second Stage Sludge
	S3150	Solidified Homogeneous Solids	RF	004	Special Setups
			RF	292	Cemented Sludge
			RF	696	Bldg 771 Cemented Incinerator Sludge
			RF	744	Pits 11 and 12 Special Setups
			RF	800	First Stage Sludge-Cemented
			RF	802	Solidified Laboratory Waste
			RF	803	Solidified DCP Sludge
			RF	818	Cemented Incinerator Ash
			RF	820	Cemented Soot
WMCG Solidified Organics	**S3200 Organic Homogeneous Solids (SCG subgroup)**				
	WMCs	**WMC Description**	**GEN IDC Prefix[b]**	**IDC**	**IDC Description**
	S3114	Absorbed Organic Liquids	RF	003[f]	Organic Setups, Oil Solids
			RF	743	Pits 11 & 12 Organic Setups
	S3150	Solidified Homogeneous Solids	RF	700[a]	OASIS Waste
			RF	801[a]	Solidified Organics

Table 2 (cont.)

S4000 Soil/Gravel (SCG)
No WIPP approved WSPFs

S5000 Debris Waste (SCG)					
	WMCs	**WMC Description**	**GEN IDC Prefix[b]**	**IDC**	**IDC Description**
WMCG Heterogeneous Debris Waste	S5490	Unknown/Other Heterogeneous Debris	AE	100	General Plant Waste
			AE	101	Cut Up Gloveboxes
			AE	104	Alpha Hot Cell Waste
			AE	106	Special Source Material
			AE	110	Research Generated Waste
			AE	120	D and D Waste Compactable and Combustible solids
			AW	150	Laboratory Waste
			AW	160	AL/CL Debris Waste
			AW	161	ACL Glassware, Paper, Poly, and Misc.
			AW	162	ANL-W FMF EFL Zr-U-Pu Fuel Cast
			AW	163	ANL-W ACL Cold-Line Ab. Liq. and Debris
			AW	164	ANL-W HRA/WCA Debris
			AW	165	Ash Stabilization and GGE Debris
			AW	167	MFC Contact-Handled (CH)-TRU Heterogeneous Debris
			BC	201	Non-combustible Solids
			BC	202	Combustible Solids–Paper/Cloth
			RF	241	Americium Process Residue
			RF	372	Grit
			RF	374	Blacktop, Concrete, And Construction Rubble
			RF	430	Unleached Ion Column Resin
			BN	508	AMWTP Newly Generated Debris
			BN	510	Supercompacted Debris
			BN	550	Supercompacted Debris
			BN	600	WMF-676 PCB Contaminated Debris
			RF	750	Pits 11 and 12 Debris
			RF	760	Pad 1 Cells 1 and 2 Debris

Table 2 (cont.)

S5000 Debris Waste (cont.)					
	WMCs	**WMC Description**	**GEN IDC Prefix[b]**	**IDC**	**IDC Description**
			MD	801	Rags, Paper, Wood, etc.
			MD	802	Dry Box Gloves and O-rings
			MD	803	Metal, Equipment, Pipe, Valves, etc.
			MD	804	Plastic, Tygon, Mani-Boots, etc.
			MD	805	Asbestos Filters
			MD	810	Glass Flasks, Sample Vials, etc.
			MD	813	Glass Filters and Fiberglass
			MD	814	Graphite Waste
			MD	824	Equipment Boxes, Non-combustible
			MD	825	Equipment Drums, Non-combustible
			MD	826	Equipment Boxes, Combustible
			MD	827	Equipment Drums, Combustible
			MD	838	<10 nCi/g Non-combustible
			MD	847	LSA <100 nCi/g Combustible
			MD	848	LSA <100 nCi/g Non-combustible
			RF	950	LSA Metals, Glass, etc.
			RF	960	Concrete, Asphalt, etc.
			SD	177	Pre-1980 INL-Exhumed SDA Heterogeneous Debris
	S5400	Unknown/Other Heterogeneous Debris	LA	007	Mixed Heterogeneous Debris from TA-3
			LA	009	Heterogeneous Debris Waste from the TA-21 West Facility
			LA	010	Heterogeneous Debris Waste from TA-50
			IC	601	Alpha Low Level Lab. WIPP Analytical Waste
			RL	712	Hanford Plutonium Finishing Plant Debris
			RL	714	Hanford Radiochemical Processing Lab 325 Bldg Debris
			RL	716	Hanford 231-Z Building Debris
WMCG Filters	S5410	Composite Filters	RF	328	Ful-Flo Incinerator Filters
			RF	335	Absolute 8 × 8 Filters
			RF	338	Insulation and CWS Filter Media
			RF	360	Insulation

Table 2 (cont.)

S5000 Debris Waste (cont.)					
	WMCs	**WMC Description**	**GEN IDC Prefix[b]**	**IDC**	**IDC Description**
WMCG Filters (cont.)	S5410 (cont.)	Composite Filters (cont.)	RF	376	Cemented Insulation and Filter Media
			RF	490	HEPA Filters and CWS Filters
			RF	491	Plenum Prefilters
WMCG Combustible Waste	S5300	Organic Debris	RF	010	Paper and Rags
			RF	020	Wood and Benelex
			RF	030	Plastic
			RF	33A	WETP Bin Program – Combustibles A
			RF	33B	WETP Bin Program – Combustibles B
			RF	302	Benelex and Plexiglas
			RF	330[c]	Paper and Rags – Dry
			RF	336[c]	Paper and Rags – Moist
			ID	337	Plastic, Teflon, Wash, PVC, Ret. RF TRU
			RF	337[c]	Plastics, Teflon, Washables, PVC
			RF	464	Benelex and Plexiglas
			RF	831	Dry Combustibles
			RF	832	Wet Combustibles
			RF	833	Plastics, TRU Mixed
	S5311	Leaded Gloves/Aprons	RF	040	Rubber
			RF	050	Metal scrap
			RF	339	Leaded Rubber Gloves and Aprons
			RF	463	Leaded Rubber Gloves and Aprons
	S5320	Wood Debris	RF	970	Wood
	S5390	Unknown/Other Organic Debris	RF	431	Leached Resin
			RF	432	Resin, Leached and Cemented
			RF	460	Washables, Rubber, Plastic
			RF	900	LSA Paper, Plastic, etc.
WMCG Graphite	S5126	Graphite Debris	RF	070	Graphite
			RF	300[d]	Graphite Molds
			RF	301[d]	Graphite Cores
			RF	303[d]	Scarfed Graphite Chunks
			RF	310[d]	Graphite Scarfings
			RF	312[d]	Coarse Graphite
WMCG Inorganic Nonmetal Debris	S5100[e]	Inorganic Debris	RF	441[e]	Raschig Rings, Unleached
			RF	442[e]	Raschig Rings, Leached
	S5122	Glass debris	RF	060	Glass

Table 2 (cont.)

S5000 Debris Waste (cont.)					
	WMCs	**WMC Description**	**GEN IDC Prefix[b]**	**IDC**	**IDC Description**
WMCG Inorganic Nonmetal Debris (cont.)	S5122 (cont.)	Glass debris (cont.)	RF	44A	WETP Bin Program – Glass
			RF	440	Glass
	S5123	Ceramic/brick debris	RF	371	Fire Brick
			RF	377	Coarse Fire Brick
	S5190	Unknown/Other Inorganic Debris	RF	368	Magnesium Oxide Crucibles
			RF	370	Leco Crucibles
			RF	391	Crucibles and Sand
			RF	392	Sand, Slag, and Crucibles
WMCG Lead/Cadmium Metal	S5112	Metal Debris With Lead	RF	488	Glovebox Parts w/Lead
WMCG Uncategorized Metal	S5111	Metal Debris without Lead or Cadmium	RF	416	Zinc Magnesium Alloy Metals
	S5112	Unknown/Other Metal Debris	RF	320	Heavy Non-special Source Metal
			RF	321	Lead
			RF	480	Non-special Source Metal
			RF	481	Leached Non-special Source Metal
			RF	48A	WETP Bin Program – Metal

a. Part of CCP profile ID-RF-S3150-A, Organic and Sludge Immobilization System Waste.(47)
b. Generator sites/areas are identified using the generator site and area acronyms listed in Table 1.
c. Part of CCP profile ID-RF-S5300-A, RFETS Combustibles and Plastics Stored at INL.(50)
d. Part of CCP profile ID-RF-S5126, TRU Mixed Graphite Debris.(49)
e. Part of CCP profile ID-RF-S5100-A, Rocky Flats Raschig Rings Stored at the INL.(48)
f. Part of CCP profile ID-RF-S3114, Organic Setups.(46)

3.0 AMWTP WASTE STREAMS

AK is used to describe and define WIPP waste streams. AMWTP TRU waste streams are proposed based on compilation of AK data in accordance with the WIPP WAP and the AMWTP implementing documents: MP-TRUW-8.1, Certification Plan for INL Transuranic Waste, and MP-TRUW-8.2, Quality Assurance Project Plan.(52, 98, 99)

All waste streams to be disposed of at WIPP must be from (or must have been generated from) processes associated with the national nuclear weapons program and must meet the definition of defense-related waste. In addition the waste to be disposed of at WIPP cannot be defined as high-level waste (HLW) or spent nuclear fuel (SNF). All AMWTP proposed and submitted WIPP waste streams are verified to be defense-related wastes and not HLW and/or SNF prior to development of (or inclusion into) a WIPP WSPF. (200, 201)

The delineation of all AMWTP waste streams include the following WIPP WAP criteria: [52], [i]

1. The waste stream must contain waste materials that have common physical form;
2. The waste stream must contain similar hazardous constituents; and
3. The waste stream must be generated from a single process or activity.

During waste stream development one or more IDCs may be grouped together to establish an AMWTP WIPP waste stream. Each IDC included into a WIPP waste stream undergoes characterization by AK [which is augmented on a container-by-container basis by RTR or VE]. The SCG, WMCG, WMC and IDCs included within a WIPP waste stream are confirmed through the AMWTP WIPP characterization process and through the TRU waste certification steps prior to shipment.

AMWTP TRU waste streams are identified with a BN prefix followed by the designated AMWTP WSP number. [j] For example, the AMWTP waste stream containing special setups (IDCs RF-004 and RF-802) is numbered BN004 where the BN is the AMWTP generator prefix and the assigned AMWTP WSP number is "004." [k]

AMWTP WIPP-approved waste streams are identified in tables in Sections 4.0, 6.0, and 7.0. WIPP waste streams developed by the AMWTP are documented within the AMWTP's WIPP WSP package (or, if applicable, the CCP WIPP WSP package). The AMWTP waste stream profile package includes Forms-1195, Waste Stream Profile Form; Form-1597, Reconciliation with Data Quality Objectives; Form-1598, Characterization Information Summary Report; and the applicable AK summary document. AMWTP WSP packages are submitted to Carlsbad Field Office (CBFO) for approval prior to shipment. [52, 98, 99] TRU waste eligible for disposal at WIPP is managed by the TRU Programs department and is shipped to WIPP upon WIPP approval of the applicable WSPF.

3.1 Characterization

The following subsections present general information relating to AMWTP TRU waste characterization.

Retrieved/legacy wastes that do not have legible information may be temporarily identified with an undetermined or unknown IDC. They (i.e., undefined and unknown IDCs) are temporary

---

i. The requirement for grouping waste materials generated from a single process or activity, that have common physical form and that contain similar hazardous constituents is provided in the WIPP WAP, which is Attachment C to the WIPP Hazardous Waste Facility Permit. [52]

j. Wastes profiled during the INL 3100m^3 Project and by CCP are assigned their own unique generator-specific waste stream numbers that starts with the designation "BNINW" followed by a three digit numerical code (e.g., for the WSPF relating to RF first/second stage sludge the AMWTP waste stream number is BNINW216).

k. WIPP-assigned waste stream identification numbers also have their own specific prefixes for each generator site location (for BN004 waste the WIPP waste stream identification number is IN-BN004). [45]

IDCs used for container management until the final IDC assignment can be made. Undefined IDCs have known physical forms, but determination of the generator and/or historical information is required. Undefined wastes are designated as: UN-00A, undefined homogeneous solids; UN-00B, undefined debris; UN-00C, undefined soil; or UN-00D, undefined liquid). Waste whose physical form and legacy waste generator location/ID is unknown is classified as an unknown waste (UN-000/PC-000). Undefined and unknown IDCs are evaluated on a case-by-case basis during the characterization process.

In accordance with the WIPP WAP, AK (augmented by RTR/VE) is used to perform RCRA and Toxic Substances Control Act (TSCA) characterization for WIPP waste streams. (52, 107, 202, 203, 204, 205, 206)

Initial and final AMWTP AK RCRA/TSCA characterization results for TRU waste are found in Appendix A tables. Appendix A initial characterization determinations are based on AK records received from various sources (as noted below). WIPP WAP characterization results noted in Column 7 reflect AMWTP AK characterization results including past/present augmentation of AK by RTR, VE, HSG, and solid sampling.

See Section 7.0 for additional characterization information related to AMWTP newly generated TRU waste.

3.1.1 Resource Conservation and Recovery Act

Applicable HWNs and/or hazardous waste constituents are identified for each TRU IDC prior to WIPP profiling. The HWNs and chemical constituents associated with the TRU IDCs in this report are obtained from various AK records and interactions, as well as WIPP WAP characterization results.

The various sources of AK input include, but are not limited to, one or more of the following:

1. AMWTP, INL, and CCP AK generator documentation (e.g., reports, summaries, synopses, etc.)
2. Characterization results (e.g., AK, RTR, VE, HSG, solid sampling)[1]
3. AMWTP offsite coordinators (e.g., Form-1900 and/or other offsite correspondences)
4. INL/AMWTP/CCP process knowledge information
5. Miscellaneous INL databases
6. AMWTP environmental personnel (which includes Waste Services)
7. INL/AMWTP/CCP communications.

1. Unless specifically directed by WIPP, HSG and solid sampling is no longer required to augment AK characterization. Currently, gas generating testing (GGT)/flammable gas (FLAMGAS) analysis only takes place for transportation purposes.

3.1.2 Toxic Substance Control Act

Applicable PCB determinations are conducted using the same approach as noted in Section 3.1.1 above.

The general approach and current PCB classification for AMWTP TRU waste is as follows. PCBs may be identified during collection and compilations of AK and/or during RTR/VE.[108] There is evidence that some IDCs have PCB contaminated waste (e.g., containing PCB ballast, PCB contaminated debris, or in the case of RF-003 are associated with treating PCB oil). Any retrieved waste container may contain a PCB electrical item such as light ballasts or contain oil filled electrical equipment. Once a container is found to contain PCB contaminated waste, the IDC associated with the container is evaluated to determine whether the entire IDC requires classification as PCB or whether a case-by-case container management is more appropriate.[m]

AMWTP newly generated waste may be designated as PCB waste. PCB determinations for newly generated waste are provided by Waste Services.

Unless tested to verify the actual concentration of PCBs, the AMWTP ships TRU PCB waste streams as being greater than 500 parts per million (ppm). This requirement (i.e., classification of >500 ppm PCB if untested) is specified in the WIPP PCB disposal authorization and the 40 Code of Federal Regulations (CFR) 761.50(a)(5), Polychlorinated Biphenyls (PCBs) Manufacturing, Processing, Distribution in Commerce, and Use Prohibitions, Subpart D, Storage and Disposal, Applicability.

The following TRU IDCs managed at the AMWTP are classified in their entirety as being PCB: RF-003, BC-203, BN-501, BN-511, BN-520, BN-523, IC-526, IW-526, BN-526, BN-528, BN-536, BN-597, BN-598, BN-600, IC-603, IW-603, BN-603, BN-604, BN-605, BN-616, RF-743, RF-746, SD-176, CW-216, and SD-178. Additional information on each potential and known PCB IDC is noted below.

1. IDC RF-003 (Organic Setups, Oil Solids): Waste is known to contain PCBs. This IDC is classified as PCB regulated.

2. Battelle Columbus Laboratories (BC): Based on AK, IDC BC-203 (paper, cloth, metal, glass) contains waste oils drained from various equipment pieces that are a potential source of PCBs of unknown concentrations. These waste oils were absorbed in Oil-Dri in one-gallon paint cans. An estimated 20 cans were placed in IDC BC-203 waste containers. Due to the limited number of drums in this IDC, the IDC is classified as PCB regulated. No other BC IDCs have been identified by AK as having the potential for PCB contamination.

---

m. AMWTP may choose to manage individual containers within an IDC as PCB, while at the same time classify the entire IDC as non-PCB. For example, if a container identified as IDC RF-480 (Non-Special Source Metal) is found to contain a large oil filled PCB capacitor, the container may be classified as PCB; however, the IDC itself (i.e., RF-480) remains non-PCB.

3. IDC RF-480 (Non-special Source Metal): AK records indicate that one or more containers contain PCB-contaminated equipment. PCB-containing items such as capacitors/ballast have been found in boxed waste of IDC RF-480. The overall number of PCB-items found to date is extremely small in relation to the overall volume of waste within IDC RF-480 and as a result IDC RF-480 is only considered a PCB waste stream on a case-by-case container basis.(59)

4. IDCs UN-000, UN-00A, UN-00B, UN-00C, and UN-00D: IDCs identified with a UN designator will be evaluated for PCB potential through the normal processes of RTR/VE, AK evaluation, and applicable final IDC assignment. Through these actions and applicable IDC assignment the AMWTP will determine the presence or absence of PCBs for waste management purposes. The UN-000, UN-00A, UN-00B, UN-00C, and UN-00D IDCs are determined to be PCB on a case-by-case basis at the time of RTR/VE.

5. Some newly generated IDCs may be classified as PCB, as described below.

   - The following newly generated IDCs are classified as PCB regulated: BN-501 (AMWTP PCB Soil), BN-511 (PCB Organic Homogeneous Solids), BN-520 (TRU PCB Secondary Debris Generated from Offsite Waste), BN-523 (Pad 1 Cells 1 and 2 PCB Debris), BN-526 (Lab PCB Debris Waste [not P/U-listed]), BN-528 (TRU PCB Liquids Generated During Retrieval), BN-536 (TRU Empty Containers with PCBs), BN-597 (P/U-listed Lab PCB Debris Waste), BN-598 (P/U-listed Lab PCB Homogeneous Solids Waste), BN-600 (WMF-676 PCB Contaminated Debris), BN-603 (Lab PCB Homogeneous Solids Waste [not P/U-listed]), BN-604 (Debris TSCA/PCB), BN-605 (Absorbed Liquids TSCA/PCB), and BN-616 (Organic Setups PCB Liquid).

   - BN-180 (Pad 1 Cells 1 and 2 Waste Retrieval Containers) includes intact containers and repackaged containers of waste historically stored within Cells 1 and 2 of Pad 1 with insufficient AK information to assign a legacy IDC. This IDC (BN-180) is a temporary IDC used for container management. Containers of this IDC (and inner containers) are evaluated for PCBs on a case-by-case basis.

   - All other newly generated wastes are evaluated for PCBs on a case-by-case basis.

6. IDCs RF-743 (Pits 11 & 12 Organic Setups) and RF-746 (Pits 11 & 12 Pad 903 Oil Drums): This waste was generated at Rocky Flats prior to 1972 and was retrieved from Pits 11 and 12. The waste was originally generated from the response to leaking drums stored on the RF Pad 903. These IDCs are currently managed as PCB regulated.

7. IDCs SD-704 (SDA Homogeneous Solids), SD-705 (SDA Heterogeneous Debris), and SD-706 (SDA Soil): SD-704 and SD-706 generated by the Accelerated Retrieval Project (ARP) may contain PCBs and will require a CCP evaluation on a case-by-case basis.

8. SD-179 (Pre-1980 SDA Waste Retrieval Bins), RF-998 (Pits 11 and 12 Cargos and Bins [without Roaster Oxide]), and RF-999 (Pits 11 and 12 Cargos and Bins with Roaster Oxide): These waste IDCs are from a variety of generator sources. Some of the containers within these IDCs may contain PCBs. Containers of these IDCs (and internal containers) will require an AMWTP case-by-case evaluation.

9. Offsite wastes (e.g., SL-224, RL-720, etc.) are evaluated through their applicable offsite/non-AMWTP profile and supporting PK/AK documents for RCRA/TSCA applicability prior to receipt at the AMWTP. Offsite IDCs are evaluated on a case-by-case basis.

10. Non-AMWTP (i.e., INL wastes): INTEC and RWMC laboratory waste (e.g., IC-526/IW-526, Laboratory PCB Debris Waste) are generated during laboratory support operations which include testing regulated PCB wastes. Unless tested to determine actual PCB concentrations the waste is managed as PCB regulated. These IDCs are currently classified as PCB regulated.

    One MFC container (# 10027891) that is associated with IDC AW-164 (ANL-W HRA/WCA Debris) has been identified as containing PCBs >50 ppm. All other INL IDCs (e.g., AW-167, IR-150, etc.) undergo PCB evaluation through their applicable offsite/non-AMWTP profile and supporting PK/AK documents for RCRA/TSCA applicability prior to receipt at the AMWTP on a case-by-case basis.

11. SD-176 (Pre-1980 INL- Exhumed SDA Homogeneous Solids) and SD-178 (Pre-1980 INL-Exhumed SDA Soil) are classified as PCB regulated.

12. CW-216 (Sludge Repackage Project PCB Contaminated Inorganic Sludge) is classified in its entirety as PCB regulated.

13. IW-179 (Pre-1980 SDA Waste Retrieval Bins) is an overpack container for legacy SD wastes. The IDC is a temporary IDC used for container management. This IDC (and inner containers) is evaluated for PCBs on a case-by-case basis.

3.1.3 Offsite/Non-AMWTP Waste

Offsite waste (e.g., Hanford, etc.) and non-AMWTP waste (e.g., Idaho Nuclear Technology and Engineering Center/Idaho National Laboratory, etc.) may be received for storage, for processing as supercompaction feedstock or for shipping directly to WIPP (as direct-ship profiles).

HWNs and constituents associated with offsite waste generators and non-AMWTP INL TRU wastes are received based on the generator characterization obtained through the AMWTP offsite profiling process. AK characterization information for offsite/non-AMWTP waste is obtained through the offsite waste coordinator and applicable AMWTP profiling process. Offsite and non-AMWTP RCRA/TSCA waste determinations as well as any supporting documents [offsite waste profiles, Integrated waste tracking system (IWTS), radiological results, process knowledge documentation] that are received by AK personnel through the AMWTP offsite coordinator (or designee) are included into the AMWTP AK record upon receipt.

The offsite and non-AMWTP characterization information may be subject to change prior to initial WIPP profiling.[n] With the exception of offsite waste and non-AMWTP INL legacy waste received at the AMWTP for immediate inclusion into active AMWTP WSPF or inclusion into a newly proposed AMWTP WIPP WSPF, up-to-date characterization results for offsite and non-AMWTP wastes are maintained by the AMWTP offsite waste coordinator. As a result, Appendix A tables refer the reader to the offsite waste coordinator for the most up-to-date characterization information unless the offsite/non-AMWTP waste (as received) is assigned one of the AMWTP's IDCs associated with existing AMWTP legacy waste, or is immediately being placed into an active (or newly proposed) AMWTP WSPF.

AK will obtain the most up-to-date characterization information from the AMWTP offsite coordinator at the time of WIPP profiling or inclusion into an AMWTP-designated waste stream using the same approach as noted in Section 3.1.1.

3.1.4 Radioassay

The AMWTP uses non-destructive analysis (NDA) to obtain radioassay results for WIPP waste. AMWTP's general approach for radioassay during WIPP waste stream development begins with an AK review of radioassay results. Each AMWTP waste container within a WIPP waste stream undergoes radioassay prior to reconciliation. Radioassay is conducted on the waste prior to subsequent treatment and/or shipment. AK associated with radioassay is obtained using the same approach as noted in Section 3.1.1. After radioassay is complete, the results are entered into the AMWTP's waste tracking system (WTS) and evaluated by AMWTP radiological experts to determine if the waste is a TRU WIPP candidate or a LLW/MLLW candidate waste. [o] Waste streams that are eligible for load management may contain containerized waste with radioisotope concentrations that are less than 100 nCi/g of TRU isotopes and may be shipped to WIPP providing that the payload container is equal to, or greater than, 100 nCi/g TRU isotopes. Waste streams that are not authorized for load management only include containerized wastes that are equal to, or greater than 100 nCi/g TRU isotopes. A summary of AMWTP AK and radioassay results are presented in RPT-TRUW-07, Determination of Radioisotopic Content in TRU Waste Based on Acceptable Knowledge. [109]

3.1.5 RTR and VE

AMWTP's general approach for RTR/VE augmentation of AK during WIPP waste stream development begins with AMWTP waste containers within a WIPP waste stream undergoing RTR or VE (as applicable) in accordance with the WIPP WAP.[52] The results of the RTR/VE are documented in the AMWTP WTS database by RTR/VE experts; used to augment AK characterization; used to identify prohibited items within each container; and (if applicable) are documented within AMWTP's RPT-TRUW-05. [108]

---

n. For example, based on management direction, if CWI/INL waste is received for the purpose of AMWTP storage and/or processing, the waste can be received based on initial generator characterization information. The initial generator characterization will remain applicable until after the waste is received and/or the waste is shipped off-site to WIPP. [195, 196, 197, 198, 199]

o. Unless authorized for load management, containers of waste that are determined to be non-TRU waste are managed by the LLW/MLLW Program. The LLW/MLLW Program performs final characterization and profile development based on the applicable offsite facility requirements.

4.0 AMWTP RETRIEVED HOMOGENEOUS SOLID WASTE

4.1 AMWTP Homogeneous Solids Wastes

Homogeneous solid wastes that have been profiled by AMWTP and approved by WIPP are presented in Table 3 under the subheading "*The following are AMWTP's WIPP-approved homogeneous solid WSPFs.*" The table also includes current examples of WIPP-approved WSPFs submitted by CCP on AMWTP's behalf. The associated AMWTP-authorized CCP profiles that have been approved by WIPP are presented in Table 3 under the subheading "*Examples of AMWTP-authorized CCP homogeneous solid WSPFs.*"

The approach to characterization of WIPP-eligible TRU homogeneous solids waste is the same as other WIPP-eligible TRU waste streams (See Section 3.0 above).

With the exception of CCP WSPFs developed at the direction of AMWTP, homogeneous solids waste streams identified in Table 3 were developed and characterized individually by the AMWTP using AMWTP procedures for direct-shipment to WIPP (CCP WSPFs are based on CCP AK procedures).

The CCP has profiled waste at the direction of AMWTP. AMWTP-authorized CCP WSPs (e.g., ID-RF-S3114 and ID-RF-S3150-A) were developed for direct-shipments to WIPP and include the CCP AK summary (i.e., CCP-AK-INL-005, Central Characterization Project Acceptable Knowledge Summary Report for Rocky Flats Immobilized Organic Liquids Stored at the Idaho National Laboratory, Waste Streams: ID-RF-S3114 and ID-RF-S3150-A).[111] The AMWTP-authorized CCP WSPs include RF organic sludge waste from the Grease Plant (IDC RF-003) and from the Organic and Sludge Immobilization System (OASIS) (IDCs RF-700 and 801).[46, 47]

CCP WSPFs and AK summaries include the assignment of applicable SCG, WMC, WMCG, and HWNs and are based on CCP AK procedures. Copies of the CCP documents are located in the AMWTPs Electronic Document Management System (EDMS).

Table 3. Homogeneous solids waste streams (S3000).

BN Waste Stream#	Waste Stream Description	IDC	IDC Description	Gen IDC Prefix	WMC
The following are AMWTP's WIPP-approved homogeneous solid WSPFs:					
BNINW216[57]	First/Second Stage Sludge	001	First Stage Sludge	RF	S3121
		002	Second Stage Sludge	RF	S3121
		741	Pits 11 and 12 First Stage Sludge	RF	S3121
		742	Pits 11 and 12 Second Stage Sludge	RF	S3121
		800	First Stage Sludge-Cemented	RF	S3150
BNINW218[58]	Building 374 Sludge (approved)	007	Building 374 Dry Sludge	RF	S3121
		803	Solidified DCP Sludge	RF	S3150
		807	Bypass Sludge (after 3/21/87)	RF	S3121
BN004[45]	Special Setups	004	Special Setups	RF	S3150
		744	Pits 11 and 12 Special Setups	RF	S3150
		802	Solidified Laboratory Waste	RF	—
BN835 [36]	Solidified Acid/Caustic	834	High Level Acid	MD	S3113
		835	High Level Caustic	MD	—
BN836[56]	Cemented Sludge	836	High Level Sludge/Cement	MD	S3121
BN222[95]	Solidified Plutonium Recovery Incinerator Waste	292	Cemented Sludge	RF	S3150
		696	Cemented Incinerator Sludge (Bldg 771 generated prior to March 21, 1987)	RF	—
		818	Cemented Incinerator Ash	RF	—
		820	Cemented Soot	RF	—
Examples of AMWTP-authorized CCP homogeneous solid WSPFs:					
ID-RF-S3114 (by CCP)[46]	Organic Setups	003	Organic Setups, Oil Solids	RF	S3114
		743	Pits 11 & 12 Organic Setups	RF	S3114
ID-RF-3150A (by CCP)[47]	Organic and Sludge Immobilization System Waste	700	OASIS Waste	RF	S3150
		801	Solidified Organics	RF	—

5.0 AMWTP RETRIEVED SOIL/GRAVEL WASTE

Containers primarily consisting of soil/gravel waste that are not TRU waste are ineligible for disposal at WIPP and will be segregated from the TRU soil/gravel waste and managed in accordance with applicable program requirements (e.g., LLW/MLLW Program requirements). Containerized soil that is removed from the earth-covered berm area is assigned a legacy waste IDC (as applicable). Uncontainerized soil/gravel generated as a result of soil berm and/or overburden soil removal is assigned a BN IDC.

Currently, there are no WIPP-approved WSPFs for AMWTP soil/gravel waste. When applicable, the approach to characterization of WIPP-eligible TRU soil/gravel waste would be the same as other WIPP-eligible TRU waste streams as noted above. Soil/gravel generated by removal of the soil berm and/or overburden soils is newly generated waste. The approach to characterization is in accordance with Section 3.0 and 7.0.

6.0 AMWTP RETRIEVED DEBRIS WASTE

6.1 AMWTP Direct-Shipped Debris Waste

Retrieved debris wastes (i.e., not AMWTP newly generated waste) profiled by AMWTP and approved by WIPP are presented in Table 4 under the subheading *"The following are AMWTP's WIPP-approved direct shipped heterogeneous debris WSPFs."* The table also includes current examples of WIPP-approved WSPFs submitted by CCP on AMWTP's behalf. The associated AMWTP-authorized CCP WIPP-approved profiles that are presented in Table 4 under the subheading *"Examples of AMWTP-authorized CCP WIPP-approved direct-shipped heterogeneous debris WSPFs."*

With the exception of CCP WSPFs developed at the direction of AMWTP, debris waste streams identified in Table 4 were developed and characterized individually by the AMWTP using AMWTP procedures for direct-shipment to WIPP. [p]

Waste stream profiles ID-RF-S5126, ID-RF-S5100-A, and ID-RF-S5300-A and associated AK summaries, written by the CCP at AMWTP's direction, incorporate CCP AK information on AMWTP's IDCs: RF-300, 301, 303, 310, and 312 (Graphite), RF-441 and 442 (Raschig Rings), and RF-330, 336, and 337 (Combustibles and Plastics).

Applicable CCP AK summaries and WSPFs include: [48, 49, 50, 64, 112, 113]

- CCP-AK-INL-002, Central Characterization Project Acceptable Knowledge Summary Report for the Idaho National Laboratory Rocky Flats Transuranic Graphite Debris Waste Stream, Waste Stream: ID RF S5126
- ID-RF-S5126; CCP AK INL 006, Central Characterization Project Acceptable Knowledge Summary Report for Rocky Flats Raschig Rings Stored at the Idaho National Laboratory, Waste Stream: ID-RF-S5100-A
- CCP-AK-INL-004, Central Characterization Project Acceptable Knowledge Summary Report for Rocky Flats Combustibles and Plastic Stored at the Idaho National Laboratory, Waste Stream ID-RF-S5300-A.

p. CCP WSPFs are based on CCP AK procedures.

Table 4. Retrieved direct-ship debris waste streams (S5000).

Waste Stream #	Waste Stream Description	IDC	IDC Description	Gen IDC Prefix	WMC
The following are AMWTP's WIPP-approved direct-shipped heterogeneous debris WSPFs:					
BN161[44]	Firebrick Debris	371	Fire Brick	RF	S5123
		377	Coarse Fire Brick	RF	
BN211[38]	Filter Debris Waste	328	Ful-Flo Incinerator Filters	RF	S5410
		335	Absolute 8 × 8 Filters	RF	
		338	Insulation and CWS Filter Media	RF	
		360	Insulation	RF	
		376	Cemented Insulation and Filter Media	RF	
		490	HEPA Filters and CWS Filters	RF	
BN243[40]	Glass	440	Glass	RF	S5122
BN252[41]	Leaded Rubber	339	Leaded Rubber Gloves and Aprons	RF	S5311
		463	Leaded Rubber Gloves and Aprons	RF	
BN296[39]	Non-Special Source Metal	320	Heavy Non-special Source Metal	RF	S5112
		321	Lead	RF	
		480	Non-special Source Metal	RF	
		481	Leached Non-special Source Metal	RF	
BN304[42]	Mound Debris	801	Rags, Paper, Wood, etc.	MD	S5490
		802	Dry Box Gloves and O-Rings	MD	
		803	Metal, Equipment, Pipe, Valves, etc.	MD	
		804	Plastic, Tygon, Mani-Boots, etc.	MD	
		805	Asbestos Filters	MD	
		810	Glass, Flasks, Sample Vials, etc.	MD	
		813	Glass Filters and Fiberglass	MD	
		814	Graphite Waste	MD	
		825	Equipment Drums, Non-combustible	MD	
		827	Equipment Drums, Combustible	MD	
		848	LSA <100 nCi/g Non-combustible	MD	

Table 4 (cont.)

Waste Stream #	Waste Stream Description	IDC	IDC Description	Gen IDC Prefix	WMC
Examples of AMWTP-authorized CCP WIPP-approved direct-shipped heterogeneous debris WSPFs:					
ID-RF-S5126 (by CCP)[49]	TRU Mixed Graphite Debris	300	Graphite Molds	RF	S5126
		301	Graphite Cores	RF	
		303	Scarfed Graphite Chunks	RF	
		310	Graphite Scarfings	RF	
		312	Coarse Graphite	RF	
ID-RF-S5100-A (by CCP)[48]	Rocky Flats Raschig Rings Stored at the INL	441	Raschig Rings, Unleached	RF	S5100
		442	Raschig Rings, Leached	RF	
ID-RF-S5300-A (by CCP)[50]	RFETS Combustibles and Plastics Stored at INL	330	Paper and Rags-Dry	RF	S5300
		336	Paper and Rags-Moist	RF	
		337	Plastics, Teflon, Washables, PVC	RF	

7.0 AMWTP NEWLY GENERATED WASTE

The term "newly generated waste" (including newly generated primary and secondary waste) as outlined in this document is for WIPP designation only. See the HWMA/RCRA permit for the definition of newly generated waste for purposes of compliance with the AMWTP HWMA/RCRA.[15]

AMWTP newly generated waste may be classified as newly generated "primary" wastes (e.g., repackaged legacy wastes) or newly generated "secondary" waste (e.g., PPE).[55]

AMWTP newly generated waste are identified by the IDC generator acronym "BN". AMWTP newly generated wastes may include, but may not be limited to:

- Wastes that were (and are) initially generated as a result of conducting support/secondary operations to AMWTP retrieved (and stored) legacy wastes
- Waste that has lost its original generator "pedigree" due to repackaging and/or commingling of wastes such as retrieved legacy waste within an intact original container where historical information is inadequate and whose contents can only be verified by RTR/VE at the SCG level (e.g., homogeneous solids, debris or soil)
- Loose/uncontainerized legacy waste
- Overburden soil
- Waste generated from AMWTP treatment operations (e.g., supercompaction).

AMWTP Waste Services oversees/assigns IDCs to various AMWTP newly generated wastes through waste services/generator interaction. If a new IDC is required, the IDC is developed through waste services/generator and AK interface. AMWTP Waste Services develops AMWTP HWDs (i.e., Form-1086, AMWTP Hazardous Waste Determination Checklist) and assigns HWNs for newly generated waste. Hazardous waste determinations and initial characterization for newly generated AMWTP wastes are documented within the AMWTP operating record in accordance with AMWTP MP-WM&M-13.9, Waste Characterization and Waste Services Management.(63)

AK for containers of newly generated TRU wastes is obtained from various sources as noted in Section 3.0. Containers of newly generated TRU waste undergo AK characterization using acquired AK prior to the waste being placed into an appropriate AMWTP WIPP waste stream and prior to WIPP profiling.[q]

7.1 AMWTP Debris Waste

Currently, the AMWTP is actively shipping newly generated debris waste to WIPP with two general types of WIPP-approved WSPFs. The first general type of WSPF is related to treating/compacting non-PCB debris waste. The second general type of WSPF is related to direct shipment of PCB-contaminated debris waste. Table 5 identifies the current and prior AMWTP WIPP-approved newly generated S5000 WSPFs.

The supercompacted debris waste is generated as a result of compacting non-PCB debris waste. The WIPP-approved supercompacted debris waste WSPF consists of multiple feedstock debris wastes IDCs. The list of authorized Supercompactor feedstock debris IDCs is presented in RPT-TRUW-83, Acceptable Knowledge Summary for Supercompacted Debris Waste. (114) [r]

The direct shipped PCB contaminated debris waste is generated as a result of conducting support operations within the AMWTP WMF-676. PCB-contaminated debris is primarily generated from:

- Removing PCB waste from approved Supercompactor debris feedstock
- Spill clean-up/decontamination within the WMF-676
- Treating prohibited liquids.

Table 5 identifies the AMWTP WIPP-Approved Newly Generated S5000 WSPF.

q. LLW/MLLW final hazardous/radioactive waste determinations are determined prior to offsite shipment under the LLW/MLLW Program and are maintained by LLW/MLLW personnel.

r. Proposed feedstock (e.g., new debris IDCs) must be approved as feedstock by CBFO/EPA and must also be included in the Supercompactor WIPP-approved WSPF prior to supercompaction.

Table 5. AMWTP WIPP-Approved Newly Generated Debris (S5000) WSPF.

WSP	IDC	Waste Stream and IDC Description	Gen IDC Prefix	WMC
BN510	510[a]	Supercompacted Debris	BN	S5490
BN510.1	550[b]	Supercompacted Debris	BN	S5490
BN510.2	550[c]	Supercompacted Debris	BN	S5490
BN510.3	550[d]	Supercompacted Debris	BN	S5490
BN510.4	550[f]	Supercompacted Debris	BN	S5490
BN600[e]	600	AMWTP WMF-676 PCB Contaminated Debris(BN600)	BN	S5490

a. See RPT-TRUW-30 for list of approved feedstock IDCs.
b. See RPT-TRUW-83, Rev. 5 for list of approved feedstock IDCs.
c. See RPT-TRUW-83, Rev. 6 for list of approved feedstock IDCs.
d. See RPT-TRUW-83, Revs. 7 and 8 for list of approved feedstock IDCs.
e. A new BN600.1 direct ship PCB contaminated debris WSPF is in development due to the addition of the D033 HWN to the Supercompactor feedstock.. The new WSPF will be added to this table upon approval by CBFO.
f. See RPT-TRUW-83, Rev. 9 for list of approved feedstock IDCs

8.0 SUMMARY

All TRU wastes are evaluated and assigned SCGs, WMCGs, WMCs, and IDCs, in accordance with the DOE treatability guide and WIPP WAP.

HWN assignments and PCB status for TRU waste IDCs are based on AK information obtained from various sources (as noted in Section 3.0). The initial and final HWN/PCB assignments are the result of an AK review of available AK records for the applicable IDC. The HWNs and PCB status assigned to a WIPP waste stream are based on available AK records associated with all IDCs included within the proposed WIPP waste stream and WIPP WAP characterization requirements.

WIPP waste streams meet the WIPP WAP criteria of: being generated from a single generation process or activity; must contain waste materials that have common physical form; and must contain similar hazardous constituents.

9.0 REFERENCES

NOTE: *Various AMWTP active documents, such as AMWTP procedures, reports, and operating instructions, may be cited without revision numbers or dates. Where applicable, the prior and most recent revisions of these AMWTP documents are available through the AMWTP Electronic Document Management System (EDMS).*

1. EDF-RWMC-369, Hazardous Waste Constituents of INEL Contact-Handled Stored Transuranic Waste, D. E. Kudera, EG&G Idaho, Inc., May 1989. [P307A]

2. WCP02-31, J.K. Paynter (Rocky Flats Plant), letter to distribution, Hazardous Constituents of Rocky Flats Transuranic Waste, May 23, 1989. [C245A]

3. C. K. Gaddis letter to R.D. Falconer (EG&G Idaho, Inc.), Transuranic Waste Characterization Questionnaire, Pittsburgh Naval Reactors Office, May 17, 1993. [C549A]

4. WM-F1-82-021, Content Code Assessments for the INEL Contact-Handled Stored Transuranic Wastes, T.L. Clements, Jr., October, 1982. [P024A]

5. EDF-RWMC-421, EPA Hazardous Waste Codes Found in INEL Stored TRU Waste Content Codes, INEEL, various dates. [P310A]

6. EGG-WM-6503, TRU Waste Sampling Program: Volume I - Waste Characterization, T.L. Clements, Jr. and D.E. Kudera, Idaho National Engineering Laboratory, September 1985. [P015A]

7. EDF-RWMC-759, Argonne National Laboratory-East Remote-Handled Waste, W. M. Heileson, EG&G Idaho, Inc., August 29, 1994. [P309A]

8. INEL-95/0281, Idaho National Engineering Laboratory Code Assessment of the Rocky Flats Transuranic Waste, Idaho National Engineering Laboratory, July 1995. [P016A]

9. Rocky Flats Environmental Technology Site Backlog Waste Reassessment Baseline Book, EG&G Rocky Flats Environmental Technology Site, May 16, 2000. [P052A]

10. U.S. Code of Federal Regulations, Title 40, Environmental Protection Agency, Part 261, Identification and Listing of Hazardous Waste, U.S. Environmental Protection Agency, current revision.

11. WM-PD-88-008, Waste Characterization Study on Greater Than Class 'C' Radioactive Waste from the Monsanto-Dayton Laboratory, EG&G Idaho, Inc., D.A. Peterson, January 1989. [P640A]

12. DOE/WIPP-02-3122, Contact-Handled Transuranic Waste Acceptance Criteria for the Waste Isolation Pilot Plant, U.S. Department of Energy, current revision.

13. EDF-RWMC-332, TRU Waste Assessment (for the J.C. Haynes TRU Waste Classification), D.R. Wilkinson, August 10, 1988. [P315A]

14. EDF-RWMC-452, Retrieval and Disposition of United States Americium from Mexico, J.D. Wells, March 19, 1991. [P314A]

15. ID4890008952, AMWTP HWMA/RCRA Permit, current revision.

16. INEL-96/0280, Acceptable Knowledge Document for INEEL Stored Transuranic Waste - Rocky Flats Plant Waste, Idaho National Engineering and Environmental Laboratory, February 28, 2003. [P368A]

17. RWMC-942, INEL/INT-97-00214, Disagreement with the Assignment of EPA Hazardous Waste Numbers by the Acceptable Knowledge Document, INEL 96/0280, August 12, 1997. [P239A]

18. EDF-RWMC-1048, Characterization of Wastes Generated at Argonne National Laboratory-West with IDCs of 161, 162, and 163, Idaho National Engineering and Environmental Laboratory, April, 7 1999. [P312A]

19. EDF-803, Chemical Constituents in Transuranic Storage Area (TSA) Waste, Idaho National Engineering and Environmental Laboratory, December 18, 2002. [P361A]

20. EDF-RWMC-1062, Characterization of Wastes Generated at Mound Laboratory with IDCs of 825, 847, and 848, LMITCO, April, 7 1999. [P313A]

21. RWMC-1043, INEEL/INT-98-01210, Characterization of Wastes Used in the 1991 through 1993 SWEPP Certified Waste Sampling Program, April, 7 1999. [P237A]

22. Waste Stream Profile Form INW276.004-Graphite, transmittal letter (CCN 00-013770) to Jerry Wells, US DOE, dated September 26, 2000, and WSPF Update for WIPP Operating Record, dated February 19, 2003. [P212A]

23. Waste Stream Profile Form INW247.001 Raschig Rings and transmittal Letter (CCN 15439) to Jerry Wells, US DOE, November 13, 2000. [P214A]

24. Waste Stream Profile Form INW216.001-First/Second Stage Sludge, transmittal letter (CCN 21151) to Jerry Wells, U.S. DOE, dated May 24, 2001, and WSPF Update for WIPP Operating Record, dated February 19, 2003. [P217A]

25. Waste Stream Profile Form INW218.001-Building 374 Sludge, transmittal Letter (CCN 23889) to Jerry Wells, U.S. DOE, dated July 19, 2001, and WSPF Update for WIPP Operating Record, dated February 19, 2003. [P218A]

26. Waste Stream Profile Form INW222.001-Miscellaneous Cemented Sludges, Transmittal Letter (CCN 31196) to Jerry L. Wells, U.S. DOE, and WSPF Update for WIPP Operating Record (2/19/03). [P288A]

27. Waste Stream Profile Form INW296.001 Non-Special Source Metals / (Light Metals), transmittal letter (CCN 00-014770) to Jerry Wells, US DOE, dated October 23, 2000, and WSPF Update for WIPP Operation Record, not dated. [P213A]

28. Waste Stream Profile Form INW243.001 – Glass (except Raschig Rings), transmittal letter (CCN 19871) to Jerry Wells, US DOE, dated March 26, 2001, and WSPF Update for WIPP Operating Record, dated February 19, 2003. [P215A]

29. EDF-2944, Engineering Design File Waste Stream Summary Sheet–Plastics, Idaho National Engineering and Environmental Laboratory [P283A]

30. Waste Stream Profile Form INW198.001-Plastics and transmittal Letter (CCN 29583) to Jeff Cotton, Westinghouse TRU Solutions LLC, February 1, 2002. [P285A]

31. Waste Stream Profile Form INW211.001-Filters and Insulation, transmittal letter (CCN 21154) to Jerry Wells, US DOE, dated April 26, 2001, and WSPF Update for WIPP Operating Record, April 26, 2001. [P216A]

32. RMWC Form-267, Idaho National Engineering and Environmental Laboratory (INEEL) Acceptable Knowledge (AK) Final Evaluation Checklist for WSPF INW161.001 Fire Brick/Coarse Fire Brick, September 18, 2002. [U102A]

33. Waste Stream Profile Form INW252.001-Leaded Rubber Gloves and Aprons transmittal Letter (CCN 36785) from Thomas Monk to Jerry Wells dated October 15, 2002; and EDF-2981, Waste Stream Summary Sheet–Leaded Rubber Gloves and Aprons, October 15, 2002. [P305A]

34. RWMC Form-267, Idaho National Engineering and Environmental Laboratory (INEEL) Acceptable Knowledge (AK) Final Evaluation Checklist WSPF INW252.001 Leaded Rubber Gloves and Aprons, October 25, 2002. [U103A]

35. Waste Stream Profile Form INW161.001 Fire Brick/Coarse Fire Brick; Transmittal Letter (CCN 35971) to Jerry Wells dated September 20, 2002; and EDF-3019, Engineering Design File Waste Stream Summary Sheet–Fire Brick/Coarse Fire Brick, September 20, 2002. [P306A]

36. Waste Stream Profile Package, BN835, Solidified Acid/Caustic Waste, AMWTP, April 7, 2005. [P437A]

37. Waste Stream Profile Package, BN510 Supercompacted Debris Waste, AMWTP, May 26, 2005. [P439A]

38. Waste Stream Profile Package, BN211 Filter Debris Waste, AMWTP, September 2, 2005. [P461A]

39. Waste Stream Profile Package, BN296 Non-Special Source Metal, AMWTP, September 21, 2005. [P462A]

40. Waste Stream Profile Package, BN243 Glass Debris Waste, AMWTP, September 28, 2005. [P486A]

41. Waste Stream Profile Package, BN252 Leaded Rubber Debris Waste, AMWTP, October 17, 2005. [P487A]

42. Waste Stream Profile Package, BN304 Mound Debris Waste, AMWTP, December 13, 2005. [P604A]

43. Discrepancy Report D046A – Assessment of Hazardous Waste Numbers Assigned to Rocky Flats Item Description Codes (IDCs): RF-432 and RF-822 Wastes, AMWTP, January 18, 2006. [D046A]

44. Waste Stream Profile Package BN161, Firebrick Debris Waste, AMWTP, December 20, 2005. [P610A]

45. Waste Stream Profile Package BN004, Special Setups Waste, AMWTP, December 28, 2005. [P609A]

46. Central Characterization Project Waste Stream Profile Form, Waste Stream Profile Number ID-RF-S3114, Organic Setups, CCP, November 15, 2006. [P666A]

47. Central Characterization Project Waste Stream Profile Form, Waste Stream Profile Number ID-RF-S3150-A, Organic and Sludge Immobilization System Waste, CCP, November 15, 2006. [P665A]

48. Central Characterization Project Waste Stream Profile Form, Waste Stream Profile Number ID-RF-S5100-A, Rocky Flats Raschig Rings Stored at the INL, CCP, November 15, 2005. [P638A]

49. Central Characterization Project Waste Stream Profile Form, Waste Stream Profile Number ID-RF-S5126, TRU Mixed Graphite Debris, CCP, November 15, 2005. [P636A]

50. Central Characterization Project Waste Stream Profile Form, Waste Stream Profile Number ID-RF-S5300-A, RFETS Combustibles and Plastics Stored at INL, CCP, November 15, 2005. [P637A]

51. CCP-AK-INL-001, Central Characterization Project Acceptable Knowledge Summary Report for Waste Retrieved from Designated Areas Within the Subsurface Disposal Area at the Idaho National Laboratory, CCP, April 17, 2006. [P647A]

52. NM4890139088-TSDF, Waste Analysis Plan (WIPP WAP), Attachment C to WIPP Hazardous Waste Facility Permit, State of New Mexico, current revision.

53. DOE/LLW-217, DOE Waste Treatability Group Guidance, Rev. 0, U. S. Department of Energy, January 1995. [P670A]

54. Federal Facilities Compliance Act of 1992, Public Law No. 102-386, U. S. Congress, October 6, 1992. [P1407S]

55. RPT-TRUW-06, AMWTP AK for Newly Generated Waste, AMWTP, current revision.

56. Waste Stream Profile Package BN836, Cemented Sludge Waste Stream Profile Package, AMWTP, April 28, 2006. [P646A]

57. Waste Stream Profile Package BNINW216, First/Second Stage Sludge, AMWTP, March 5, 2004. [P402A]

58. Waste Stream Profile Package BNINW218, Building 374 Sludge, AMWTP, March 17, 2004. [P420A]

59. AKR-06-380, Large PCB Items Found in Box of IDC RF 480, AMWTP, 2006 AKR record.

60. Central Characterization Project Waste Stream Profile Form; Waste Stream Profile Number ID-SDA-DEBRIS, Heterogeneous Debris from the Subsurface Disposal Area, CCP, February 21, 2007. [P661A]

61. WM-F1-81-015, Idaho National Engineering Laboratory Stored Transuranic Waste Characterization: Nonradiological Hazards Identification, Excerpts Re: Battelle Columbus, EG&G Idaho, Inc., September 1981. [P356A]

62. Discrepancy Report D043A – Assessment of Hazardous Waste Numbers Assigned to Item Description Codes (IDCs): RF292, RF371, RF377 and RF807 Wastes, AMWTP, January 18, 2006. [D043A]

63. MP-WM&M-13.9, Waste Characterization and Waste Services Management, AMWTP, current revision.

64. CCP-AK-INL-002, Central Characterization Project Acceptable Knowledge Summary Report for the Idaho National Laboratory Rocky Flats Transuranic Graphite Debris Waste Stream: ID-RF-S5126, Revision 2, CCP, October 20, 2005. [P632A]

65. EDF-1175, Engineering Design File Waste Stream Summary Sheet–Graphite, Idaho National Engineering and Environmental Laboratory, various dates. [P221A]

66. Discrepancy Report D064A –Discrepancy report to resolving the assignment of F039 to AMWTP RF Waste IDCs, AMWTP, August 26, 2008. [D064A]

67. E-mail to Steve Carpenter from James B. Zovi, Re: AMWTP Macro Rejects – PFNW, AMWTP, October 2, 2008. [C568S]

68. IWTS Material Profile No. 2815A: CH-MLLW Generated at HFEF – WCA. ANL-W, May 12, 1998. [P711A]

69. IWTS Material Profile No. 2815: MLLW generated at HFEF-WCA. ANL-W, December 1, 1997. [P728A]

70. CCP-PK-NTS-001, Central Characterization Project Process Knowledge Summary Report for Nevada Test Site Lawrence Livermore National Laboratory Waste, Waste Streams: NTLLNL-S5400 and NTLLNL-S3900, Revision 1, CCP, November 21, 2008. [P748A]

71. CCP-PK-NTS-003, Central Characterization Project Process Knowledge Summary Report for Nevada Test Site Lawrence Berkeley National Laboratory Waste, Waste Streams: NTLBL-S5400 and NTLBL-S3900, Revision 0, CCP, November 6, 2008. [P749A]

72. Discrepancy Report D073A - Assessment of Hazardous Waste Numbers Assigned to Rocky Flats Description Code (IDCs): RF-292 and 807b, AMWTP, January 29, 2009. [D073A]

73. Discrepancy Report D063A - Advanced Mixed Waste Treatment Project (AMWTP), Rocky Flats Environmental Technology Site (RFETS) and Idaho National Laboratory's (INL) Accelerated Retrieval Project (ARP) Subsurface Disposal Area (SDA) hazardous waste determinations (HWDs)/Hazardous waste numbers (HWNs) for roaster oxide, AMWTP, August 26, 2008. [D063A]

74. Telephone Conversation with Robert J. Hudson, retired RWMC RCT on February 26, 2009 Re: Drums retrieved in 1978 from Trench 5 marked "Cluster Fragmentation Bomb," AMWTP, February 26, 2009. [C617A]

75. Correspondence from AMWTP Environmental Compliance and Regulatory Affairs, Re: Assignment of New IDCs for Squeezants, AMWTP, March 19, 2009. [C629A]

76. Correspondence from AMWTP Environmental, Safety, Security, and Health Organization, IDCs, AMWTP, April 16, 2009. [C821A]

77. CCP-PK-NTS-005, Central Characterization Project Process Knowledge Summary Report for Nevada Test Site Lynchburg Research Center Debris Waste, Waste Stream: NTLRC-S5400, Revision 0, CCP, December 11, 2008. [P784A]

78. CCP-PK-NTS-006, Central Characterization Project Process Knowledge Summary Report for Stored Contact-Handled Transuranic Debris Waste Generated by EG&G Energy Measurements, Inc. at the North Las Vegas Facility, Waste Stream NTS-EG&G-HET, Revision 0, CCP, April 9, 2009. [P790A]

79. CCP-PK-NTS-007, Central Characterization Project Process Knowledge Summary Report for Tonopah Test Range/Roller Coaster Project Contact-Handled Transuranic Waste, Waste Stream: NTS-TTR-HET, Revision 0, CCP, April 9, 2009. [P791A]

80. CCP-PK-NTS-4, Central Characterization Project Process Knowledge Summary Report for Contact-Handled Transuranic Debris Waste from Decontaminating Rocky Flats Classified Waste at the Nevada Test Site, Waste Stream: NT-RF-DECON, Revision 0, CCP, April 15, 2009. [P792A]

81. CCP-PK-NTS-008, Central Characterization Project Process Knowledge Summary Report for Nevada Test Site Lawrence Livermore and Lawrence Berkeley National Laboratory Waste, Waste Stream: NTLLLBL-S5400, Revision 0, CCP, April 15, 2009. [P793A]

82. CCP-PK-NTS-009, Central Characterization Project Process Knowledge Summary Report for Nevada Test Site Inhalation Toxicology Research Institute Waste, Waste Stream: NTS-ITRI-S5310, Revision 0, CCP, April 17, 2009. [P794A]

83. CCP-PK-NTS-010, Central Characterization Project Process Knowledge Summary Report for Nevada Test Site Visual Examination and Repackaging Building Decon and Maintenance Waste, Waste Stream: NTVERB-S5400, Revision 0, CCP, April 17, 2009. [P795A]

84. CCP-AK-INL-009, Central Characterization Project Acceptable Knowledge Summary Report for Idaho National Laboratory, Nevada Test Site Lawrence Livermore National Laboratory Waste, Waste Streams: ID-NTLLNL-S5400 and ID-NTLLNL-S3900, Revision 0, CCP, November 19, 2008. [P785A]

85. CCP-AK-INL-015, Central Characterization Project Acceptable Knowledge Summary Report for Idaho National Laboratory, Nevada Test Site Lawrence Livermore and Lawrence Berkeley National Laboratory Waste, Waste Stream: ID-NTLLLBL-S5400, Revision 0, CCP, August 6, 2009. [P821A]

86. CCP-AK-INL-013, Central Characterization Project Acceptable Knowledge Summary Report for Idaho National Laboratory, Nevada Test Site EG&G Energy Measurements, Inc. (North Las Vegas Facility) Debris Waste, Waste Stream: ID-NTS-EG&G-HET, Revision 1, CCP, September 15, 2009. [P809A]

87. CCP-AK-INL-011, Central Characterization Project Acceptable Knowledge Summary Report for Idaho National Laboratory, Nevada Test Site Lynchburg Research Center Debris Waste, Waste Stream: ID-NTLRC-S5400, Revision 0, CCP, August 13, 2009. [P818A]

88. CCP-AK-INL-012, Central Characterization Project Acceptable Knowledge Summary Report for Idaho National Laboratory, Contact-Handled Transuranic Debris Waste from Decontaminating Rocky Flats Classified Waste at the Nevada Test Site, Waste Stream: ID-NT-RF-DECON, Revision 0, CCP, August 04, 2009. [P819A]

89. CCP-AK-INL-014, Central Characterization Project Acceptable Knowledge Summary Report for Idaho National Laboratory, Tonopah Test Range/Roller Coaster Project Contact-Handled Transuranic Waste, Waste Stream: ID-NTS-TTR-HET, Revision 0, CCP, July 15, 2009. [P820A]

90. CCP-AK-INL-010, Central Characterization Project Acceptable Knowledge Summary Report for Idaho National Laboratory, Nevada Test Site Lawrence Berkeley National Laboratory Waste, Waste Streams: ID-NTLBL-S5400 and ID-NTLBL-S3900, Revision 0, CCP, June 18, 2009. [P810A]

91. CCP-AK-INL-016, Central Characterization Project Acceptable Knowledge Summary Report for Idaho National Laboratory, Nevada Test Site Inhalation Toxicology Research Institute Waste, Waste Stream: ID-NTS-ITRI-S5310, Revision 0, CCP, July 27, 2009. [P822A]

92. CCP-AK-INL-017, Central Characterization Project Acceptable Knowledge Summary Report for Idaho National Laboratory, Nevada Test Site Visual Examination and Repackaging Building Decon and Maintenance Waste, Waste Stream: ID-NTVERB-S5400, Revision 0, CCP, August 6, 2009. [P823A]

93. AKR-05-235, Potential Presence of Hexachlorobenzene in the Supercompacted Debris Waste (BN 510), AMWTP, current AKR record.

94. RPT-TRUW-30, Acceptable Knowledge Summary for Supercompacted Debris Waste (BN510), AMWTP, May 26, 2005. [P439A]

95. Waste Stream Profile Package for Solidified Plutonium Recovery Incinerator Waste (BN222), AMWTP, January 29, 2010. [P841A]

96. CKA-001-10, Correspondence from Carolyn Abbott, Acceptable Knowledge Expert, Re: Pad 1, Cells 1 and 2 Waste, AMWTP, March 17, 2010. [C855A]

97. RPT-TRUW-82, Acceptable Knowledge Document for Hanford Debris Waste Shipped to AMWTP, AMWTP, May 04, 2010. [P857A]

98. MP-TRUW-8.1, Certification Plan for INL Transuranic Waste, Advanced Mixed Waste Treatment Project, AMWTP, current revision. [P396A]

99. MP-TRUW-8.2, Quality Assurance Project Plan, AMWTP, current revision. [P1118A]

100. AMWTP Form-1900, DOE CH-TRU Waste Profile for LL-W019-S3900, Lawrence Livermore National Laboratory Solidified Inorganics and Solidified Organics (LL-212), AMWTP, May 04, 2010. [P870A]

101. AMWTP Form-1900, DOE CH-TRU Waste Profile for LL-M001-S5400, Lawrence Livermore National Laboratory Heterogeneous Debris (LL-213), AMWTP, May 04, 2010. [P871A]

102. AMWTP Form-1900, DOE CH-TRU Waste Profile for LL-T004-S3141, Lawrence Livermore National Laboratory Salts (LL-221), AMWTP, May 04, 2010. [P872A]

103. AMWTP Form-1900, DOE CH-TRU Waste Profile for GEVNC.02, GEVNC Hot Cell 4 Debris (IDC GV-222), AMWTP, April 19, 2010. [P869A]

104. INL/EXT-10-17600, Process Knowledge Summary Report for Materials and Fuels Complex Contact-Handled Transuranic Debris Waste, MFC, February 01, 2013. [P842A]

105. RPT-TRUW-79, Acceptable Knowledge Document for Materials and Fuels Complex (MFC) Waste, AMWTP, current revision. [P890A]

106. RPT-670, CH2M-WG Idaho Process Knowledge Summary Report for CH TRU Waste and Mixed Low-Level Waste Generated at INTEC and RWMC Analytical Laboratories in Support of AMWTP Sampling Activities, INTEC, November 2010. [P891A]

107. MP-TRUW-8.13, Collection, Review, and Management of Acceptable Knowledge Documentation, AMWTP, current revision. [P2004S]

108. RPT-TRUW-05, Waste Matrix Code Reference Manual, AMWTP, current revision. [P399A]

109. RPT-TRUW-07, Determination of Radioisotopic Content in TRU Waste Based on Acceptable Knowledge, AMWTP, current revision. [P398A]

110. TREE-1286, Initial Drum Retrieval Final Report, K. B. McKinley and J. D. McKinney, Idaho National Engineering Laboratory, EG&G Idaho, Inc., August 1978. [P652S]

111. CCP-AK-INL-005, Central Characterization Project Acceptable Knowledge Summary Report for Rocky Flats Immobilized Organic Liquids Stored at the Idaho National Laboratory, Waste Streams: ID-RF-S3114 and ID-RF-S3150-A, Revision 1, CCP, January 4, 2006. [P634A]

112. CCP-AK-INL-006, Central Characterization Project Acceptable Knowledge Summary Report for Rocky Flats Raschig Rings Stored at the Idaho National Laboratory, Waste Stream: ID-RF-S5100-A, Revision 1, CCP, October 20, 2005. [P635A]

113. CCP-AK-INL-004, Central Characterization Project Acceptable Knowledge Summary Report for Rocky Flats Combustibles and Plastic Stored at the Idaho National Laboratory, Waste Stream ID-RF-S5300-A, Revision 1, CCP, October 6, 2005. [P633A]

114. RPT-TRUW-83, Acceptable Knowledge Summary for Supercompacted Debris Waste, Rev. 8, AMWTP, current revision. [P2008A]

115. BN510.3 Waste Stream Profile Package, Supercompacted Debris Waste, AMWTP, November 7, 2013. [P2002A]

116. CCP-PK-RL-101, Central Characterization Project Process Knowledge Summary Report for Hanford Plutonium Finishing Plant Contact-Handled Transuranic Debris Waste, 85-Gallon Overpacked Drums, Waste Stream MPFPDD, Rev. 2, CCP, June 4, 2010. [P853A]

117. CCP-PK-RL-102, Central Characterization Project Process Knowledge Summary Report for the Hanford 325 Building Radiochemical Processing Laboratory Contact-Handled Transuranic Debris Waste, 85-Gallon Overpacked Drums, Waste Stream RLM325D.001, Rev. 2, CCP, June 4, 2010. [P854A]

118. CCP-PK-RL-103, Central Characterization Project Process Knowledge Summary Report for Hanford 231-Z building Contact Handled Transuranic Debris Waste, 85-Gallon Overpacked Drums, Waste Stream RLM231ZD.001, Rev. 2, CCP, June 4, 2010. [P855A]

119. Reserved.

120. CCP-AK-SRS-3, Central Characterization Project Acceptable Knowledge Summary Report for Savannah River Site, Waste Streams SR-W026-221F, Rev. 9, CCP, April 26, 2010. [P1135A]

121. AMWTP Waste Services Letter to File RE: Absorbed Supercompactor Squeezants (IDCs BN-507 and BN-514), HWN 061604-01, AMWTP, current revision. [C953A]

122. AMWTP Waste Services Letter to File RE: HWD 040811-01, WMF-676 PCB Contaminated Debris (BN-600), AMWTP, current revision. [C1018A]

123. Response to Request for Additional Information on Environmental Protection Agency (EPA) Hazardous Waste "P" and "U" Codes relative to B374 Operations, RFETS, August 29, 2001. [C948S]

124. AMWTP Form-1687, Non-AMWTP Generator Waste Profile for INTC-S5-001, INTEC Waste Drum INTC050203, AMWTP, January 9, 2008. [P1260A]

125. AMWTP Form-1687, Non-AMWTP Generator Waste Profile for INTC-S3-001, INTEC Waste Drum INTC0500032, AMWTP, January 21, 2008. [P1261A]

126. Interoffice memorandum, Summary of Retrieval Acceptable Knowledge for Pad R, Cell 1 Waste, CKA-001-09, AMWTP, May 21, 2009. [C618A]

127. AMWTP Form-1687 Non-AMWTP Generator Waste Profile for Los Alamos National Laboratory TA-50 Radioactive Liquid Waste Treatment Facility Homogeneous Inorganic Solids (LA-002), AMWTP, August 06, 2007. [P769A]

128. AMWTP Form-1687 Non-AMWTP Generator Waste Profile for Los Alamos National Laboratory TA-50 Radioactive Liquid Waste Treatment Facility Homogeneous Inorganic Solids (LA-003), AMWTP, January 4, 2007. [P770A]

129. AMWTP Form-1900, AMWTP Generator Waste Profile for Los Alamos National Laboratory TA-55 Mixed Transuranic Waste, LA-MIN04-S.001 (IDC LA-005), AMWTP, May 02, 2011. [P1224A]

130. AMWTP Form-1900, DOE CH-TRU Waste Profile for LANL-CIN01.001, Los Alamos National Laboratory Solidified Inorganics (LA-006), AMWTP, December 03, 2009. [P1145A]

131. AMWTP Form-1900, DOE CH-TRU Waste Profile for nuclear Fuel Services Contact-Handled Transuranic Waste Soil Stored at Oak Ridge National Laboratory (OR-250), AMWTP, December 07, 2008. [P772A]

132. AMWTP Form-1687 NON-AMWTP Generator Waste Profile for Hanford PFP Absorbed Plutonium Nitrate Solutions RLPUNIT (RL-715), AMWTP, June 10, 2008. [P774A]

133. AMWTP Form-1587 NON-AMWTP Generator Waste Profile for Hanford Grouted KE Basin North Loadout Pit Sludge (RL-720), AMWTP, August 16, 2007. [P776A]

134. AMWTP Form-1900 DOE CH-TRU WASTE PROFILE For Mound Plant Solidified Acid/Caustic Waste Stored at the Savannah River Site (SR-835), AMWTP, March 04, 2009. [P778A]

135. AMWTP Form-1900, DOE CH-TRU Waste Profile for SR-AGNS-HOM, Barnwell Solidified Inorganic Waste stored at Savannah River Site (IDC SR-251), AMWTP, August 09, 2010. [P1152A]

136. AMWTP Form-1900, DOE CH-TRU Waste Profile for Savannah River Site, Building 221F, Absorbed Waste (IDC SR-252), AMWTP, September 05, 2010. [P1134S]

137. AMWTP Form-1900, AMWTP Offsite Waste Stream Profile for SR-MD-HOM-C, Mound Site Inorganic Particulates Stored at Savannah River Site (SR-253), AMWTP, July 26, 2011. [P1153A]

138. AMWTP Form-1900, AMWTP Offsite Waste Stream Profile for SNL-SA-T001-S5400, Lovelace Respiratory Research Institute Heterogeneous Debris Stored at Sandia National Laboratories (SL-223), AMWTP, December 06, 2010. [P1146A]

139. AMWTP Form-1900, AMWTP Offsite Waste Stream Profile for SNL-HFC-S5400, Sandia National Laboratories Hot Cell Facility Heterogeneous Debris (SL-224), AMWTP, December 06, 2010. [P1148A]

140. AMWTP Form-1900, AMWTP Offsite Waste Stream Profile for SNL-SOURCES-S5400, Radioactive Sources from Sandia National Laboratory (SL-227), AMWTP, March 16, 2011. [P1150A]

141. AMWTP Form-1900, AMWTP Offsite Waste Stream Profile for AECHHM-PK, Argonne CH Homogeneous Solids (AE-254), AMWTP, May 11, 2011. [P1154A]

142. AMWTP Form-1900, AMWTP Offsite Waste Stream Profile for LBNL-S5400, Lawrence Berkeley Mixed Heterogeneous Debris (LB-229), AMWTP, May 19, 2011. [P1313A]

143. AMWTP Form-1900, AMWTP Offsite Waste Stream Profile for NRD.1, Nuclear Radiation Development Mixed Heterogeneous Debris (ND-228), May 31, 2011. [P1312A]

144. AMWTP Form-1900, AMWTP Offsite Waste Stream Profile for ID-ICP-MFC-Gloves, EFL Lead Gloves (AW-225), March 14, 2011, AMWTP, March 14, 2011. [P1143A]

145. AMWTP Form-1687, Non-AMWTP Generator Waste Profile for IW-LAB-PCB-S5490, Laboratory PCB Debris (IW-526), AMWTP, February 8, 2010. [P1162A]

146. AMWTP Form-1687, Non-AMWTP Generator Waste Profile for IW-LAB-S5490, Laboratory Non-PCB Debris (IW-527), AMWTP, February 8, 2010. [P1163A]

147. AMWTP Form-1687, Non-AMWTP Generator Waste Profile for IW-LAB-S3900, Laboratory Homogeneous Solids (IW-603), AMWTP, February 8, 2010. [P1165A]

148. AMWTP Form-1900, AMWTP Offsite Waste Stream Profile for SR-MD-SOIL, Mound Site Soil/Debris Stored at SRS (SR-842), Rev. 0, AMWTP, May 19, 2011. [P1314A]

149. AMWTP Form-1900, AMWTP Offsite Waste Stream Profile for AECHDM-PK, Argonne CH Debris (AE-230), AMWTP, July 19, 2011. [P1154A]

150. CCP-AK-ANLE-001, Rev. 11, Central Characterization Project Acceptable Knowledge Summary Report for Argonne National Laboratory – East Contact-Handled TRU Waste, Facility Maintenance and Laboratory Operations, CCP, December 31, 2003. [P1380A]

151. CCP-AK-INL-025, Rev. 1, Central Characterization Project Acceptable Knowledge Summary Report For Idaho National Laboratory, Argonne Contact-Handled Transuranic Waste from Facility Maintenance and Laboratory Operations, Waste Streams: ID-AECHDM, ID-AECHHM, CCP, December 2011. [P1379A]

152. Discrepancy Report for ANL-E waste characterization, AMWTP, January 30, 2012. [D096A]

153. CCP-AK-ANLE-500, Rev. 9, CCP-AK-ANLE-500 Central Characterization Project Acceptable Knowledge Summary Report For Argonne Remote-Handled Debris Waste, Waste Stream: AERHDM, CCP, December 2011. [P1381A]

154. Pad 1, Cells 1 and 2 Retrieval Containment Enclosure/Inner Containment Enclosure Newly Generated Waste, -TV-001-12, AMWTP, March 28, 2012. [C1044A]

155. Preliminary Determination of Hazardous Waste from Other Generators Collocated with Rocky Flats Plant Transuranic Waste in the OU 7-13/14 Subsurface Disposal Area, INEEL/EXT-03-01139, INEEL, May 2004. [P1372A]

156. Record of Decision for Radioactive Waste Management Complex Operable Unit 7-13/14, DOE/ID-11359, Revision 0, DOE, EPA and IDEQ, September 2008. [P1387S]

157. Historical Background Report for Rocky Flats Plant Waste Shipped to the INEEL and Buried in the SDA from 1954 to 1971, North Wind, Inc. TRU Program Technical Services, March 2005. [P443A]

158. RPT-TRUW-56, Acceptable Knowledge Document for INL Stored Transuranic Waste - Rocky Flats Plant Waste, AMWTP, current revision. [P649A]

159. RPT-TRUW-91, Acceptable Knowledge Document for Pre-1980 INL-Exhumed SDA Waste, AMWTP, current revision. [P1826A]

160. INEL-95/0310 (Formerly EGG-WM-10903) Rev. 1, A Comprehensive Inventory of Radiological and Nonradiological Contaminants in Waste Buried in the Subsurface Disposal Area of the INEL RWMC During the Years 1952-1983, Vol. 1, INEL, August 1995. [P1389A]

161. INEL-95/0310 (Formerly EGG-WM-10903) Rev. 1, A Comprehensive Inventory of Radiological and Nonradiological Contaminants in Waste Buried in the Subsurface Disposal Area of the INEL RWMC During the Years 1952-1983, Vol. 2, INEL, August 1995. [P1390A]

162. INEL-95/0310 (Formerly EGG-WM-10903) Rev. 1, A Comprehensive Inventory of Radiological and Nonradiological Contaminants in Waste Buried in the Subsurface Disposal Area of the INEL RWMC During the Years 1952-1983, Vol. 3, INEL, August 1995. [P1391A]

163. INEL-95/0310 (Formerly EGG-WM-10903) Rev. 1, A Comprehensive Inventory of Radiological and Nonradiological Contaminants in Waste Buried in the Subsurface Disposal Area of the INEL RWMC During the Years 1952-1983, Vol. 4, INEL, August 1995. [P1392A]

164. INEL-95/0310 (Formerly EGG-WM-10903) Rev. 1, A Comprehensive Inventory of Radiological and Nonradiological Contaminants in Waste Buried in the Subsurface Disposal Area of the INEL RWMC During the Years 1952-1983, Vol. 5, INEL, August 1995. [P1393A]

165. INEL-95/0343, Work Plan for Operable Unit (OU) 7-13 & 7-14 Waste Area Group (WAG-7) Comprehensive Remedial Investigation Feasibility Study (RI/FS) and Addendums, T. A. Bensen and K. Jean Holdren, May 1, 1996; August 1998, INEL, August 2004. [P1405A]

166. EGG-WM-9707, Radioactive Waste Management Complex Investigation Report, volumes 1 through 4, M. L. Paarmann, December 1991. [P1412S]

167. AMWTP Form-1900, AMWTP Offsite Waste Stream Profile for SR-W027-773A-HOM, SRS Solidified Inorganics from 773A (SR-257), AMWTP, April 17, 2012. [P1409S]

168. CCP-AK-SRS-7, Central Characterization Project Acceptable Knowledge Summary Report for Savannah River Site Waste Streams: SR-W027-773A-HET, SR-W027-773A-HOM, Rev. 5, CCP, August 12, 2011. [P1415A]

169. CCP-AK-SRS-530, Central Characterization Project; Acceptable Knowledge Summary Report for Battelle Columbus Laboratories Decommissioning Project (BCLDP); Homogeneous Transuranic Waste from the Building JN-1 Hydraulic Room; Waste Stream: SR-BCLDP.003 – Hydraulic Sludge and Debris; SR-BCLDP.003.001 - CH Hydraulic Sludge and Debris, CCP, February 1, 2012. [P1467A]

170. AMWTP Form-1900, AMWTP Offsite Waste Stream Profile for SR-SDD-HOM-A, SRS Solidified Organics from 211F (SR-258), AMWTP, April 17, 2012. [P1414S]

171. AMWTP Form-1900, AMWTP Offsite Waste Stream Profile SR-SDD-HOM-B, SRS Solidified Inorganics from 211F (SR-259), AMWTP, April 17, 2012. [P1413S]

172. RPT-TRUW-89, Acceptable Knowledge Document for Argonne National Laboratory – East (ANL-E) Waste, AMWTP, current revision. [P1825A]

173. Form-1900, Offsite Waste Stream Profile Savannah River Site. IDC SR-260, AMWTP, May 9, 2012. [P1465A]

174. CCP-AK-SRS-6, Central Characterization Project Acceptable Knowledge Summary Report For Savannah River Site Waste Streams: SR-W027-235F-HET, SR-W027-235F-HOM, and SR-W027-235F-HEPA, CCP, September 16, 2010. [P1368A]

175. AMWTP Form-1900, DOE CH-TRU Waste Profile for SR-W027-221H-HOM, SRS Solidified Inorganics from 221H (SR-256), AMWTP, November 7, 2011. [P1469A]

176. AMWTP Form-1900, DOE CH-TRU Waste Profile for, SRS SR-W027-321M-HOM Solidified Organics from 321M (SR-260), AMWTP, May 14, 2012. [P1470A]

177. RPT-TRUW-04, Acceptable Knowledge Summary for Battelle Columbus laboratories Building JN-4 Plutonium Laboratory, AMWTP, current revision. [P417A]

178. RPT-TRUW-60, Acceptable Knowledge Summary for INL Stored Waste -Bettis Atomic Power Laboratory, AMWTP, current revision. [P650A]

179. AMWTP Form-1900, Offsite Waste Profile for SR-BCLDP.003.001. IDC: SR-261, AMWTP, May 14, 2012. [P1464A]

180. AMWTP Form-1900, DOE CH-TRU Waste Profile for, SRS SR-W027-235F-HOM Inorganic homogeneous solids (SR-255), AMWTP, October 20, 2011. [P1471A]

181. RPT-TRUW-93, Acceptable Knowledge Document for Los Alamos National Laboratory Debris Waste, AMWTP, current revision. [P1851A]

182. LST-EC&P-11, AMWTP HWMA/RCRA Permit WMF-676 Waste Management Criteria, AMWTP, current revision. [P2047S]

183. EDF-0783, Deflagration Analysis of Aerosol Can Propellant in the Supercompactor Glovebox, AMWTP, November 14, 2012. [P1829A]

184. Discrepancy report: E-mail correspondence from Mike Papp to Steve Carpenter - Re: Waste Stream LA-MHD03.001 2-nitropropane, AMWTP, July 09, 2013. [D113S]

185. Discrepancy report: Discrepancies between HWNs and constituents cited in MFC source documents, AMWTP, July 2013. [D114A]

186. E-mail from Mike Romero addressing waste codes for CMBs with aerosol cans and D001/D003 HWN applicability, LANL, August 27, 2013. [C1318A]

187. AMWTP Form-1900, AMWTP Offsite Waste Profile Form for LANL LA-MHD01.001, AMWTP, September 12, 2013. [P1998A]

188. AMWTP Form-1900, AMWTP Offsite Waste Profile Form for LANL LA-MHD04.001, AMWTP, September 12, 2013. [P1999A]

189. AMWTP Form-1900, AMWTP Offsite Waste Profile Form for LANL LA-MHD09.001, AMWTP, September 12, 2013. [P2001A]

190. AMWTP Form-1900, for Materials and Fuels Complex trans-shipped Advanced Test Reactor Complex Waste, AMWTP, September 19, 2013. [P1997A]

191. RPT-TRUW-13, Acceptable Knowledge Document for INL Stored Transuranic Waste - Mound Plant Waste, AMWTP, current revision. [P418A]

192. RPT-TRUW-92, Acceptable Knowledge Document for Select Idaho National Laboratory (INL) Facilities, AMWTP, current revision. [P1970A]

193. Discrepancy resolution, Historical Assignment of the F002 HWN to Carbon Tetrachloride, AMWTP, December 11, 2013. [D115S]

194. INEEL/EXT-98-01213, A Regulatory Analysis and Reassessment of U. S. Environmental Protection Agency Listed Hazardous Waste Numbers for Applicability to the INTEC Liquid Waste System, K. L. Gilbert, PhD and T. E. Venneman, MS, February 1999. [P1367A]

195. E-mail correspondence, AMWTP; Re: HWNs for CWI/MFC leaded gloves, AMWTP, December 19, 2013. [C1339S]

196. Offsite waste profile Form 1900 ID-ICP-MFC-Gloves (AW-167), AMWTP, January 14, 2014. [P2025A]

197. Central Characterization Program Acceptable Knowledge Summary Report For Idaho National Laboratory Materials and Fuels Complex Contact-Handled TRU

Debris Waste Stream ID-MFC-S5400 (CCP-AK-INL-008), CCP, December 3, 2012. [P680A]

198. Discrepancy report, Discrepancies between HWNs and constituents cited in multiple documents related to MFC debris waste, AMWTP, January 9, 2014. [D116A]

199. Correspondence from Haar to Richard Vonfeldt, Contract No. DE-EM0001467, acceptance notification for Idaho Cleanup Project Waste Profile ID-ICP-MFC-Gloves –DHH01-14, AMWTP, January 27, 2014. [C1344A]

200. Nuclear Waste Policy Act of 1982, 1982, U.S. Congress, 1982. [P757A]

201. DOE/WIPP-02-3122, Transuranic Waste Acceptance Criteria for the Waste Isolation Pilot Plant, Department of Energy, April 22, 2013. [P2003A]

202. INST-FOI-17, Facility Visual Examination Operations, AMWTP, current revision. [P433A]

203. INST-OI-12, Real-Time Radiography Examinations (Certification Scans), AMWTP, current revision. [P407A]

204. INST-OI-34, Non-Facility Visual Examination Operations, AMWTP, current revision. [P387A]

205. INST-FOI-01, In-Plant Drum Assay Operations, AMWTP, current revision. [P1125S]

206. INST-OI-14, Drum Assay Operations, AMWTP, current revision. [P1131S]

207. CCP-AK-LANL-009, Central Characterization Project (CCP), Rev 8, November 5, 2013. [P1840A]

208. Material Safety Data sheets Petroleum Ether/Naptha (and applicable photos of reagent bottle), Mallinckrodt and AMWTP, April 06, 1989 and April 17, 2014. [P2061S]

Appendix A
—
Chemical Constituents and HWNs Identified in TRU Waste

Appendix A – Chemical Constituents and HWNs Identified in TRU Waste

Appendix A information is used to support the AMWTP HWMA/RCRA permit development relating to TRU waste storage and management and is used to track HWN assignments relating to WIPP-approved WSPFs. Appendix A characterization determinations do not reflect LLW/MLLW program decisions and do not include (or are otherwise based on) a review of AK/PK documentation associated with the LLW/MLLW program. See the LLW/MLLW program coordinator for characterization determinations for LLW/MLLW shipped off-site.

Appendix A summarizes hazardous waste constituents for TRU IDCs with the exception of waste received by the AMWTP Offsite Waste Program (see Notes 9 and 15). AMWTP TRU wastes including TRU wastes received at the AMWTP for WIPP profiling by AMWTP or CCP, are listed in the following tables by generator and IDC. A brief waste description is noted in Column 2. The chemical constituents, hazardous items, or potential properties for individual IDCs are identified in Column 3. Related Chemical Abstract Service (CAS) numbers are tabulated in Column 4. Potential hazardous constituents, potential chemical properties, and potential hazardous items that may be found within an applicable IDC (and associated source document reference numbers) are noted in Column 5. Information within Column 5 reflects unconfirmed information relating to potential EPA hazardous constituent (e.g., listed or characteristic) or potential EPA hazardous characteristic property.[s]

Potential hazardous constituents (Column 5) associated with AMWTP legacy wastes may not necessarily reflect generator-assigned HWNs (Column 6) or final WIPP-assigned HWNs (Column 7). These potential hazardous constituents/properties/items listed in Column 5 were identified based on information provided by the AMWTP Waste Services organization; non-AMWTP waste generators; potential constituents/properties identified from conducting historical reviews of referenced AK documents; and/or based on the result of sampling activities. The identification of potential hazardous constituents/properties is for purposes of supporting safe storage.

Changes to the current list of potential hazardous constituents and/or potential properties and hazardous items will be based on new AK information associated with various sources of information identified in Section 3.1. Generator-assigned and WIPP-approved EPA HWNs are presented in Columns 6 and 7, respectively. The "Initial Gen Assigned HWN" column (Column 6) contains the HWNs originally assigned by the waste generator, if available. The "WIPP WSPF Approved HWN" column (Column 7) contains HWNs assigned through the WIPP characterization process and documented in the applicable WIPP-approved WSPF. The HWNs assigned for WIPP disposal pertain only to those containers certified for WIPP disposal. HWNs

s. IDCs listed in Appendix A are subject to change. HWNs and constituents associated with off-site wastes are available through the offsite waste program personnel. The final list of WIPP HWNs and constituents for TRU wastes will be identified prior to the time of WIPP profiling.

associated with non-WIPP disposal shipments are maintained by the appropriate AMWTP programs.

HI (historical interpretation), WG (waste generator), AK (acceptable knowledge), and WS (waste stream) noted in the headers of the following tables reflect applicable sources of information based on waste generator supplied information, AK, and WSPF characterization results, respectively.

Throughout the following tables, comments such as "See Note 1" refer to the notes in Table A-34. Those notes refer to all of the tables in this appendix.

The AK source document references associated with hazardous constituent/HWN are typically noted within the first row of the applicable columns as superscripted reference numbers in parentheses, such as X $^{(1)}$.

Table A-1. Argonne National Laboratory – East (AE) hazardous constituents, chemical properties, or hazardous items identified in TRU waste.

AE IDC Numeric Code	Waste Description	Constituent/Compound/Item	CAS	Potential Hazardous Constituent, Chemical Property, or Hazardous Item (for supporting safe storage configurations)[HI, WG] See Note 26	Initial Gen Assigned HWN [WG, PC] See Note 29	WIPP WSPF Approved HWN [WS, AK]
100	GENERAL PLANT WASTE	1,1-dichlorethylene	75-35-4	X [1, 4, 5, 150, 151, 152, 172]	D029 [4, 5, 108, 150, 151, 152, 172, 182, 183] See Notes 4, 8, 25	See Note 22
		1,2-dichloroethane	107-06-2	X	D028	
		1,4-dichlorobenzene	106-46-7	X	D027	
		1,1,1-trichloroethane (TCA)	71-55-6	X	F002	
		1,1,2-trichloro-1,2,2-trifluoroethane	76-13-1	X	F002	
		2-4-dinitrotoluene	121-14-2	X	D030	
		acetone	67-64-1	X	F003 See Note 2	
		arsenic	7440-38-2	X	D004	
		barium	7440-39-3	X	D005	
		benzene	71-43-2	X	F005	
		cadmium	7440-43-9	X	D006	
		carbon tetrachloride	56-23-5	X	D019	
		carbon disulfide	75-15-0	X	F005	
		chlorobenzene	108-90-7	X	F002	
		chromium	7440-47-3	X	D007	
		ethyl acetate	141-78-6	X	F003 See Note 2	
		ethyl benzene	100-41-4	X	F003 See Note 2	
		ethyl ether	60-29-7	X	F003 See Note 2	
		isobutanol	78-83-1	X	F005	
		lead	7439-92-1	X	D008	
		mercury	7439-97-6	X	D009	
		methanol	67-56-1	X	F003 See Note 2	
		methyl ethyl ketone (2-butanone)	78-93-3	X	F005	
		methyl isobutyl ketone	108-10-1	X	F003 See Note 2	
		methylene chloride	75-09-2	X	F002	
		n-butyl alcohol	71-36-3	X	F003 See Note 2	
		nitrates	—	X	—	
		nitrobenzene	98-95-3	X	F004	
		pentachlorophenol	87-86-5	X	D037	
		petroleum ether/Naptha	64742-82-1	X[208]	D001 (see Notes 2 and 30)	
		selenium	7782-49-2	X	D010	

Table A-1. (cont.) AE

AE IDC Numeric Code	Waste Description	Constituent/Compound/Item	CAS	Potential Hazardous Constituent, Chemical Property, or Hazardous Item (for supporting safe storage configurations)[HI, WG] See Note 26	Initial Gen Assigned HWN [WG, PC] See Note 29	WIPP WSPF Approved HWN [WS, AK]
100	GENERAL PLANT WASTE (cont.)	silver	7440-22-4	X	D011	See Note 22
		tetrachloroethylene (perclene)	127-18-4	X	F002	
		toluene	108-88-3	X	F005	
		trichloroethylene (TCE)	79-01-6	X	F002	
		xylene	1330-20-7	X	F003 See Note 2	
101	CUT UP GLOVEBOXES	See IDC AE-100 for constituents and HWNs	—	X (1, 4, 5, 150, 151, 152)	X (1, 4, 5, 108, 150, 151, 152, 182, 183) See Notes 4, 8, and 25	See Note 22
102	ABSORBED LIQUIDS	See IDC AE-100 for constituents and HWNs	—	X (1, 4, 5, 150, 151, 152)	X(1, 4, 5, 150, 151, 152)	—
104	ALPHA HOT CELL WASTE	See IDC AE-100 for constituents and HWNs	—	X (1, 4, 5, 150, 151, 152)	X(1, 4, 5, 108, 150, 151, 152, 182, 183) See Notes 4, 8, and 25	See Note 22
105	EMPTY BOTTLES AND ABSORBENT	See IDC AE-100 for constituents and HWNs	—	X (1, 4, 5, 150, 151, 152)	X (1, 4, 5, 150, 151, 152)	—
106	SPECIAL SOURCE MATERIAL	See IDC AE-100 for constituents and HWNs	—	X (1, 4, 5, 150, 151, 152)	X (1, 4, 5, 150, 151, 152)	See Note 22
107	RH WASTE (See Note 21)	1,2-dichloroethane	107-06-2	X (153)	D029 (153)	—
		1,4-dichlorobenzene	106-46-7	X	D027	—
		1,1,1-trichloroethane (TCA)	71-55-6	X	F001/F002	—
		1,1,2-trichloro-1,2,2-trifluoroethane	76-13-1	X	F002	—
		acetone	67-64-1	X	F003 See Note 2	—
		arsenic	7440-38-2	X	D004	—
		barium	7440-39-3	X	D005	—
		benzene	71-43-2	X	F005	—
		cadmium	7440-43-9	X	D006	—
		carbon tetrachloride	56-23-5	X	D019	—
		chlorobenzene	108-90-7	X	F002	—
		chromium	7440-47-3	X	D007	—
		ethyl acetate	141-78-6	X	F003 See Note 2	—
		ethyl benzene	100-41-4	X	F003 See Note 2	—
		ethyl ether	60-29-7	X	F003 See Note 2	—
		isobutanol	78-83-1	X	F005	—
		lead	7439-92-1	X	D008	—

Table A-1. (cont.) AE

AE IDC Numeric Code	Waste Description	Constituent/Compound/Item	CAS	Potential Hazardous Constituent, Chemical Property, or Hazardous Item (for supporting safe storage configurations)[HI, WG] See Note 26	Initial Gen Assigned HWN [WG, PC] See Note 29	WIPP WSPF Approved HWN [WS, AK]
107	RH WASTE (cont.) (See Note 21)	mercury	7439-97-6	X	D009	—
		methanol	67-56-1	X	F003 See Note 2	—
		methyl ethyl ketone (2-butanone)	78-93-3	X	F005	—
		methyl isobutyl ketone	108-10-1	X	F003 See Note 2	—
		methylene chloride	75-09-2	X	F002	—
		n-butyl alcohol	71-36-3	X	F003 See Note 2	—
		nitrobenzene	98-95-3	X	F004	—
		pentachlorophenol	87-86-5	X	D037	—
		selenium	7782-49-2	X	D010	—
		silver	7440-22-4	X	D011	—
		tetrachloroethylene (perclene)	127-18-4	X	F002	—
		toluene	108-88-3	X	F005	—
		trichloroethylene (TCE)	79-01-6	X	F002	—
		xylene	1330-20-7	X	F003 See Note 2	—
110	RESEARCH GENERATED WASTE	See IDC AE-100 for constituents and HWNs	—	X (1, 4, 5, 150, 151, 152)	X (1, 4, 5, 108, 150, 151, 152, 182, 183) See Notes 4, 8, and 25	See Note 22
111	SOLIDIFIED WET SLUDGE	See IDC AE-100 for constituents and HWNs	—	X (1, 4, 5, 150, 151, 152)	X (1, 4, 5, 150, 151, 152)	—
120	D AND D WASTE COMPACTABLE AND COMBUSTIBLE SOLIDS	See IDC AE-100 for constituents and HWNs	—	X (1, 4, 5, 150, 151, 152)	X (1, 4, 5, 108, 150, 151, 152, 182, 183) See Notes 4, 8, and 25	See Note 22
121	TRU ORGANIC SOLID WASTE	See IDC AE-100 for constituents and HWNs	—	X (1, 4, 5, 150, 151, 152)	X (1, 4, 5, 150, 151, 152)	—
230	ARGONNE CH-DEBRIS	See Notes 9 and 15 (149)	See Note 9 (149)	See Note 9 (149)	See Note 9 (149)	—
254	ARGONNE CH HOMOGENEOUS SOLIDS	See Notes 9 and 15 (141)	See Note 9 (141)	See Note 9 (141)	See Note 9 (141)	—

Table A-2. Argonne National Laboratory – West (AW) hazardous constituents, chemical properties, or hazardous items identified in TRU waste.

AW IDC Numeric Code	Waste Description	Constituent/Compound/Item	CAS	Potential Hazardous Constituent, Chemical Property, or Hazardous Item (for supporting safe storage configurations)[HI, WG] See Note 26	Initial Gen Assigned HWN [WG, PC] See Note 29	WIPP WSPF Approved HWN [WS, AK]
150	LABORATORY WASTE	See AW-167 for constituents and HWNs	—	X [1, 5, 105, 185]	X [1, 5, 105, 185] See Notes 2 and 3	See Note 22
		Potential corrosives if liquids exceed the WIPP-WAC limit	—	-	D002	—
153	COMBUSTIBLE LAB WASTE	See AW-150 for constituents and HWNs	—	X [1, 5, 105, 185]	X [1, 5, 105, 185]	—
154	SAMPLE FUEL	See AW-150	—	X [1, 4, 5, 105, 185]	X [1, 4, 5, 105, 185]	—
155	TRU SCRAP	See AW-150 for constituents and HWNs	—	X [1, 5, 105, 185]	X [1, 5, 105, 185]	—
160	AL/CL DEBRIS WASTE (See Note 15)	See AW-167 for constituents and HWNs	—	X [1, 5, 105, 185]	X [1, 5, 105, 185]	See Note 22
161	ACL GLASSWARE, PAPER, POLY, AND MISCELLANEOUS	See AW-167 for constituents and HWNs	—	X [1, 5, 18, 105] See AW-167	X [1, 5, 18, 105] See AW-167	See Note 22
162	ANL-W FMF EFL ZR-U-PU FUEL CASTING	See AW-167 for constituents and HWNs	—	X [1, 5, 18, 105] See AW-167	X [1, 5, 18, 105] See AW-167	See Note 22
163	ANL-W ACL COLD-LINE ABSORBED LIQUID AND DEBRIS	See AW-167 for constituents and HWNs	—	X [1, 5, 18, 105] See AW-167	X [1, 5, 18, 105] See AW-167	See Note 22
164	ANL-W HRA/WCA DEBRIS (See Note 15)	arsenic	7440-38-2	X [68, 69, 104, 105, 185]	D004 [68, 69,104,105,185]	See Note 22
		barium	7440-39-3	X	D005	
		beryllium (not beryllium powder)	7440-41-7	X		
		cadmium	7440-43-9	X	D006	
		chromium	7440-47-3	X	D007	
		hydrofluoric acid (used)	7664-39-3	X	—	
		lead	7439-92-1	X	D008	
		mercury	7439-97-6	X	D009	
		selenium	7782-49-2	X	D010	
		silver	7440-22-4	X	D011	
		1,1,1-trichloroethane (TCA)	71-55-6	X	F001/F002	
		1,1,2-trichloro-1,2,2-trifluorethane	76-13-1	X	F002	
		1,1,2-trichloroethane	79-00-5	X	F002	

Table A-2 (cont.) AW

AW IDC Numeric Code	Waste Description	Constituent/Compound/Item	CAS	Potential Hazardous Constituent, Chemical Property, or Hazardous Item (for supporting safe storage configurations)[HI, WG] See Note 26	Initial Gen Assigned HWN [WG, PC] See Note 29	WIPP WSPF Approved HWN [WS, AK]
164	ANL-W HRA/WCA DEBRIS (See Note 15) (cont.)	1,4-dichlorobenzene (AKA p-dichlorobenzene)	106-46-7	X	D027	See Note 22
		1,2-dichloroethane	107-06-2	X	D028	
		1,1-dichlorethylene	75-35-4	X	D029	
		2,4-dinitrotoluene	121-14-2	X	D030	
		2-ethoxyethanol	110-80-5	X	F005	
		2-nitropropane	79-46-9	X	F005	
		acetone	67-64-1	X	F003 See Note 2	
		benzene	71-43-2	X	D018/F005	
		carbon disulfide	75-15-0	X	F005	
		carbon tetrachloride	56-23-5	X	D019/F001	
		chlorobenzene	108-90-7	X	D021/F002	
		chloroform (trichloromethane)	67-66-3	X	D022	
		cresols	1319-77-3	X	D026	
		cyanide- electroplating sludges	—		F006	
		cyanide plating bath solutions	—	X	F007	
		cyanide cleaning bath solutions	—	X	F009	
		cyclohexanone (cyclohexane)	110-82-7	X	F003 See Note 2	
		ethyl acetate (acetic acid)	141-78-6	X	F003 See Note 2	
		ethyl benzene	100-41-4	X	F003 See Note 2	
		ethyl ether	60-29-7	X	F003 See Note 2	
		hexachlorobenzene	118-74-1	X	D032	
		hexachloroethane	67-72-1	X	D034	
		isobutyl alcohol	78-83-1	X	F005	
		methanol	67-56-1	X	F003 See Note 2	
		methylene chloride	75-09-2	X	F001/F002	
		methyl ethyl ketone (2-butanone)	78-93-3	X	D035/F005	
		methyl isobutyl ketone	108-10-1	X	F003 See Note 2	
		nitrobenzene	98-95-3	X	D036/F004	
		n-butyl alcohol (butanol)	71-36-3	X	F003 See Note 2	
		pentachlorophenol	87-86-5	X	D037	
		pyridine	110-86-1	X	D038/ F005	
		tetrachloroethylene (perclene)	127-18-4	X	D039/F001/F002	
		toluene	108-88-3	X	F005	

Table A-2 (cont.) AW

AW IDC Numeric Code	Waste Description	Constituent/Compound/Item	CAS	Potential Hazardous Constituent, Chemical Property, or Hazardous Item (for supporting safe storage configurations)[HI, WG] See Note 26	Initial Gen Assigned HWN [WG, PC] See Note 29	WIPP WSPF Approved HWN [WS, AK]
164	ANL-W HRA/WCA DEBRIS (See Note 15) (cont.)	trichloroethylene	79-01-6	X	D040/F001/F002	See Note 22
		trichloromonofluoromethane	75-69-4	X	F002	
		vinyl chloride	75-01-4	X	D043	
		xylenes	1330-20-7	X	F003 See Note 2	
165	ASH STABLIZATION & GGE DEBRIS (See Note 15)	arsenic	7440-38-2	X [104, 105, 185]	D004 [68, 105, 185]	See Note 22
		barium	7440-39-3	X	D005	
		beryllium (not beryllium powder)	7440-41-7	X	—	
		cadmium	7440-43-9	X	D006	
		chromium	7440-47-3	X	D007	
		lead	7439-92-1	X	D008	
		hydrofluoric acid (used)	7664-39-3	X	-	
		mercury	7439-97-6	X	D009	
		selenium	7782-49-2	X	D010	
		silver	7440-22-4	X	D011	
		1,1,1-trichloroethane (TCA)	71-55-6	X	F001/F002	
		methylene chloride	75-09-2	X	F001/F002	
		xylene	1330-20-7	X	F003 (See Note 2)	
		toluene	108-88-3	X	F005	
167	MFC CH-TRU HETEROGENOUS DEBRIS (See Note 15)	arsenic	7440-38-2	X [104, 105, 185, 196, 197, 198]	D004 [104, 105, 185, 196, 197, 198]	See Note 22
		barium	7440-39-3	X	D005	
		beryllium (not beryllium powder)	7440-41-7	X	—	
		cadmium	7440-43-9	X	D006	
		chromium	7440-47-3	X	D007	
		hydrofluoric acid (used)	7664-39-3	X	—	
		lead	7439-92-1	X	D008	
		mercury	7439-97-6	X	D009	
		selenium	7782-49-2	X	D010	
		silver	7440-22-4	X	D011	
		chloroform (trichloromethane)	67-66-3	X	D022	
		carbon tetrachloride	56-23-5	X	F001	

Table A-2 (cont.) AW

AW IDC Numeric Code	Waste Description	Constituent/Compound/Item	CAS	Potential Hazardous Constituent, Chemical Property, or Hazardous Item (for supporting safe storage configurations)[HI, WG] See Note 26	Initial Gen Assigned HWN [WG, PC] See Note 29	WIPP WSPF Approved HWN [WS, AK]
167	MFC CH-TRU HETEROGENOUS DEBRIS (cont.) (See Note 15)	trichloroethylene	79-01-6	X	F002	See Note 22
		toluene	108-88-3	X	F005	
		pyridine	110-86-1	X	F005	
		various acids	—	—	—	
225	EFL LEAD GLOVES	See Notes 9 and 15 (144)	See Note 9 (144)	See Note 9 (144)		—

Table A-3. Battelle Columbus (BC) hazardous constituents, chemical properties, or hazardous items identified in TRU waste.

BC IDC Numeric Code	Waste Description	Constituent/Compound/Item	CAS	Potential Hazardous Constituent, Chemical Property, or Hazardous Item (for supporting safe storage configurations)[HI, WG] See Note 26	Initial Gen Assigned HWN [WG, PC] See Note 29	WIPP WSPF Approved HWN [WS, AK]
201	NON-COMBUSTIBLE SOLIDS	lead	7439-92-1	X [(1, 4, 177)]	D008- [(1, 4, 108, 177, 182, 183)] See Notes 4, 8, and 25	See Note 22
		acetone	67-64-1	X	F003 See Note 2	
		alcohol (unspecified)	—	X	See Note 2	
		barium	7440-39-3	X	D005	
		cadmium	7440-43-9	X	D006	
		chromium	7440-47-3	X	D007	
		mercury	7439-97-6	X	D009	
		silver	7440-22-4	X	D011	
		benzene	71-43-2		F005	
		methanol	67-56-1	X	F003 See Note 2	
		n-butyl alcohol (butanol)	71-36-3	X	See Note 2	
		ethanol	—	x	See Note 2	
		hexane	110-54-3	X	See Note 2	
		various acids (H_2S0_4, HNO_2, HCL)	—	X	See Note 2	
		hydrofluoric acid (used)	7664-39-3	X	-	
		ethyl benzene	100-41-4	X	See Note 2	
		lithium metal	7439-93-2	X	See Note 8	
		methyl ethyl ketone (2-butanone)	78-93-3	X	F005	
		sodium (metal and sodium potassium)	7440-23-5	X	See Note 8	
		trichloroethylene	79-01-6	X	F001/F002	
		methylene chloride	75-09-2	X	F001/F002	
		toluene	108-88-3	X	F005	
		xylene	1330-20-7	X	See Note 2	
202	COMBUSTIBLE SOLIDS-PAPER/CLOTH	See BC 201 for constituents and HWNs	—	See BC 201	See BC 201 [(108, 182, 183)] See Notes 4, 8, 25	See Note 22
203	PAPER, CLOTH, METALS, GLASS	polychlorinated-biphenyls (PCBs)	1336-36-3	PCB [(61)]	N/A [(61, 108, 182, 183)] See Notes 4, 8, 25	—
		See BC 201 for constituents and HWNs	—	See BC 201	See BC 201	—
204	SOLIDIFIED SOLUTIONS	See BC 201 for constituents and HWNs	—	See BC 201	—	—

Table A-4. Bettis Atomic Power Laboratory (BL) hazardous constituents, chemical properties, or hazardous items identified in TRU waste.

BL IDC Numeric Code	Waste Description	Constituent/Compound/Item	CAS	Potential Hazardous Constituent, Chemical Property, or Hazardous Item (for supporting safe storage configurations)[HI, WG] See Note 26	Initial Gen Assigned HWN [WG, PC] See Note 29	WIPP WSPF Approved HWN [WS, AK]
010	RAGS, GLOVES, POLY	1,1,2-trichloro-1,2,2-trifluoroethane	76-13-1	X [1, 3, 5]	F001 [178]	—
		lead	7439-92-1	X	D008	—
		methylene chloride	75-09-2	X	F001	—
012	MISCELLANEOUS SOURCES	None [3, 5, 178]	—	None [3, 5, 178]	None [3, 5, 178]	—
015	NEUTRON SOURCES	beryllium (not beryllium powder)	7440-41-7	X [3]	None [178]	—
020	NON-COMPRESSIBLE, NON-COMBUSTIBLE	1,1,2-trichloro-1,2,2-trifluoroethane	76-13-1	X [1, 3, 4, 5]	F001 [178]	—
		methylene chloride	75-09-2	X	F001	—
		lead	7439-92-1	X	D008	—
		nitrates	—	X	—	—
		potential corrosives if liquids exceed the WIPP-WAC limit	—	X	D002	—
030	SOLIDIFIED GRINDING SLUDGE	1,1,2-trichloro-1,2,2-trifluoroethane	76-13-1	X [3, 5]	F001 [178]	—
		methylene chloride	75-09-2	X	F001	—
		lead	7439-92-1	X	D008	—
040	SOLIDIFIED BINARY SCRAP POWDER	potential corrosives if liquids exceed the WIPP-WAC limit	—	X [1, 3, 4 5, 178]	D002	—
		lead (shielding only)	7439-92-1	X	D008 [178]	
050	SOLIDIFIED SOLUTIONS	None [3, 5, 178]	—	None [3, 5, 178]	None [3, 5, 178]	—
081	METAL SAMPLES FISSILE	None [3, 5, 178]	—	None [3, 5, 178]	None [3, 5, 178]	—
338	RWMC LEAD SHIELDED OVERPACK: EMPTY	lead	7439-92-1	X [1, 178]	D008 [178]	—

Table A-5. AMWTP (BN) hazardous constituents, chemical properties, or hazardous items identified in TRU waste.

BN IDC Numeric Code	Waste Description	Constituent/Compound/Item	CAS	Potential Hazardous Constituent, Chemical Property, or Hazardous Item (for supporting safe storage configurations)[HI, WG] See Note 26	Initial Gen Assigned HWN [WG, PC] See Note 29	WIPP WSPF Approved HWN [WS, AK]
180	PAD 1 CELLS 1, 2 AND 3 WASTE RETRIEVAL CONTAINERS See Note 13.	See BN-550 for temporary list of constituents [154]	—	See BN-550 [154]	See BN-550 list of HWNs [154]	—
		beryllium (not beryllium powder)	7440-41-7	PK	None	—
		polychlorinated-biphenyls (PCBs)	1336-36-3	PCB [154]	N/A	—
500	NEWLY GENERATED DEBRIS (NOT BN-508)	See Note 20	—	See Note 20	See Note 20	—
501	AMWTP PCB SOIL	See Note 20	—	See Note 20	See Note 20	—
		polychlorinated-biphenyls (PCBs)	1336-36-3	PCB [154]	See Note 20	—
505	INORGANIC HOMOGENEOUS SOLIDS	See Note 20	—	See Note 20	See Note 20	—
507	ABSORBED AQUEOUS SQUEEZANTS	See BN-550 and Note 20	—		See BN-550 and Note 20	—
508	AMWTP NEWLY GENERATED DEBRIS	See BN-550 [37, 114]	—	See BN-550 [37, 114]	See BN-550 [37, 108, 114 182, 183] See Notes 4, 8, 25	See Note 22
509	ABSORBED ORGANIC LIQUIDS (EXCLUDING SQUEEZANTS)	See Note 20	—	See Note 20	See Note 20	—
510	SUPERCOMPACTED DEBRIS (See Note 22)	arsenic	7440-38-2	X [37, 93]	D004 [37]	D004[37]
		asbestos	1332-21-4	X	N/A	N/A
		barium	7440-39-3	X	D005	D005
		benzene	71-43-2	X	F005	F005
		cadmium	7440-43-9	X	D006	D006
		carbon disulfide	75-15-0	X	F005	F005
		carbon tetrachloride	56-23-5	X	F001	F001
		chloroform (trichloromethane)	67-66-3	X	D022	D022
		chromium	7440-47-3	X	D007	D007
		cyanide cleaning bath solutions	—	X	F009	F009
		cyanide plating bath solutions	—	X	F007	F007
		electroplating sludges	—	X	F006	F006
		hexachlorobenzene	118-74-1	X	N/A	N/A
		lead	7439-92-1	X	D008	D008
		mercury	7439-97-6	X	D009	D009
		methanol	67-56-1	X	See Note 2	N/A
		methylene chloride	75-09-2	X	F002	F002
		methyl ethyl ketone (2-butanone)	78-93-3	X	F005	F005

Table A-5. (cont.) BN

BN IDC Numeric Code	Waste Description	Constituent/Compound/Item	CAS	Potential Hazardous Constituent, Chemical Property, or Hazardous Item (for supporting safe storage configurations)[HI, WG] See Note 26	Initial Gen Assigned HWN [WG, PC] See Note 29	WIPP WSPF Approved HWN [WS, AK]
510	SUPERCOMPACTED DEBRIS (cont.) (See Note 22)	selenium	7782-49-2	X	D010	D010
		silver	7440-22-4	X	D011	D011
		tetrachloroethylene (perclene)	127-18-4	X	F001/F002	F001/F002
		toluene	108-88-3	X	F005	F005
		trichloroethylene (TCE)	79-01-6	X	F001/F002	F001/F00
		xylene	1330-20-7	X	See Note 2	N/A
511	PCB ORGANIC HOMOGENEOUS SOLIDS	See Note 20	—	See Note 20	See Note 20	—
		polychlorinated-biphenyls (PCBs)	1336-36-3	PCB See Note 20. (154)	N/A	—
513	NON-PCB ORGANIC HOMOGENEOUS SOLIDS	See Note 20 (154)	—	See Note 20 (154)	See Note 20 (154)	—
514	ABSORBED ORGANIC SQUEEZANTS	See BN-550 and Note 20	—		See BN-550 and Note 20 (37, 75, 97)	—
515	ABSORBED AQUEOUS LIQUIDS (EXCLUDING SQUEEZANTS)	See Note 20	—	See Note 20	See Note 20	—
516	WMF-676 INORGANIC HOMOGENEOUS SOLIDS	See BN-550 and Note 20	See BN-550 and Note 20	See BN-550 and Note 20	See BN-550 and Note 20	—
517	TRU SUPERCOMPACTOR SQUEEZANTS (P/U LISTED)	See BN-550 and Note 20	See BN-550 and Note 20	See BN-550 and Note 20	See BN-550 and Note 20	—
518	TRU SUPERCOMPACTOR SQUEEZANTS	See BN-550 and Note 20	—		See BN-550 and Note 20 (37,75, 97, 114)	—
519	TRU SDOP to SUPERCOMPACTOR	IDC not used for characterization. Confirmed TRUW-83 feedstock only.(108) Temporary IDC for transport only. See IDC BN-550	—	IDC not used for characterization. Temporary IDC for transport only. Confirmed TRUW-83 feedstock only.(108) See IDC BN-550	IDC not used for characterization. Temporary IDC for transport only. Confirmed TRUW-83 feedstock only.(108) See IDC BN-550	—
520	TRU PCB SECONDARY DEBRIS GENERATED FROM OFFSITE WASTE (See Note 5)	See Note 20	—		See Note 20	—
521	TRU SECONDARY DEBRIS GENERATED FROM OFFSITE WASTE (See Note 5)	See Note 20	—		See Note 20	—
522	AMWTP NON-PCB SOIL	See Note 20	—	See Note 20	See Note 20	—

Table A-5. (cont.) BN

BN IDC Numeric Code	Waste Description	Constituent/Compound/Item	CAS	Potential Hazardous Constituent, Chemical Property, or Hazardous Item (for supporting safe storage configurations)[HI, WG] See Note 26	Initial Gen Assigned HWN [WG, PC] See Note 29	WIPP WSPF Approved HWN [WS, AK]
523	PAD 1 CELLS 1 AND 2 PCB DEBRIS	See BN-550 [(154)] and ID-150	—	See BN-550 [(154)] and ID-150	See BN-550 [(154)] and ID-150	—
		beryllium (not beryllium powder)	7440-41-7	PK	None	—
		polychlorinated-biphenyls (PCBs)	1336-36-3	PCB	N/A	—
524	PAD 1 CELLS 1 AND 2 NON-PCB DEBRIS	See BN-550 [(154)] and ID-150	—	See BN-550 [(154)] and ID-150	See BN-550 [(154)] and ID-150	—
		beryllium (not beryllium powder)	7440-41-7	PK	None	
525	P/U-LISTED LAB NON-PCB DEBRIS WASTE	See Note 20	—	See Note 20	See Note 20	—
526	LAB PCB DEBRIS WASTE (NOT P/U-LISTED)	See Note 20 [(154)]		See Note 20 [(154)]	See Note 20 [(154)]	—
527	LAB NON-PCB DEBRIS WASTE (NOT P/U-LISTED)	See Note 20 [(154)]		See Note 20 [(154)]	See Note 20 [(154)]	—
528	TRU PCB LIQUIDS	See Note 20		See Note 20	See Note 20	—
		polychlorinated-biphenyls (PCBs)	1336-36-3	PCB	N/A	—
529	TRU NON-PCB LIQUIDS	See Note 20	—	See Note 20	See Note 20	—
534	ORGANIC LIQUID FROM MAINTENANCE ACTIVITIES	See Note 20		See Note 20	See Note 20	—
536	TRU EMPTY CONTAINERS WITH PCBS	polychlorinated-biphenyls (PCBs)	1336-36-3	PCB	None	—
537	TRU EMPTY CONTAINERS	None identified	—	N/A	None	—
538	OVERSIZED DEBRIS ITEMS FROM SUPERCOMPACTOR FACILITY	See IDC BN-550 [(37, 97, 114)]		See IDC BN-550 [(37, 97, 114)]	See IDC BN-550 [(37, 97, 114)]	—
539	TRU RADIOACTIVE ONLY DEBRIS WASTE	N/A	N/A	PK	None	—
540	OVERSIZED DEBRIS ITEMS FROM SUPERCOMPACTOR FACILITY	See IDC BN-550 [(37, 97, 114)]		See IDC BN-550 [(37, 97, 114)]	See IDC BN-550 [(37, 97, 114)]	—

Table A-5. (cont.) BN

BN IDC Numeric Code	Waste Description	Constituent/Compound/Item	CAS	Potential Hazardous Constituent, Chemical Property, or Hazardous Item (for supporting safe storage configurations)[HI, WG] See Note 26	Initial Gen Assigned HWN [WG, PC] See Note 29	WIPP WSPF Approved HWN [WS, AK]
541	DEBRIS SDOP TO SUPERCOMPACTOR	IDC not used for characterization. Confirmed TRUW-83 feedstock only.[108] Temporary IDC for transport only. See IDC BN-550	—	IDC not used for characterization. Temporary IDC for transport only. Confirmed TRUW-83 feedstock only.[108] See IDC BN-550	IDC not used for characterization. Temporary IDC for transport only. Confirmed TRUW-83 feedstock only.[108] See IDC BN-550	—
550	SUPERCOMPACTED DEBRIS See Note 22	1,1,1-trichloroethane (TCA)	71-55-6	X [37, 97, 114]	F001/F002 [37, 97, 114]	F001/F002 [37, 97, 114, 115]
		1,1,2-trichloro-1,2,2-trifluoroethane	76-13-1	X	F001/F002	F001/F002
		1,1,2,2,-tetrachloro-1,2-difluoroethane	79-34-5	X	F001	F001 [97, 115]
		1,1,2-trichloroethane	79-00-5	X	F002	F002
		1,2-dichloroethane	107-06-2	X	D028	D028
		1,2-dichlorobenzene	95-50-1	X	F002	F002
		1,1-dichloroethylene	75-35-4	X	D029	D029
		1,4-dichlorobenzene	106-46-7	X	D027	D027
		2,4-dinitrotoluene	121-14-2	X	D030	D030
		2-ethoxyethanol	110-80-5	X	F005	F005
		2-nitropropane	79-46-9	X	F005 [97]	F005
		acetone	67-64-1	X	See Note 2	See Note 2
		arsenic	7440-38-2	X	D004	D004
		asbestos	1332-21-4	X	N/A	N/A
		barium	7440-39-3	X	D005	D005
		benzene	71-43-2	X	F005	F005
		beryllium (not beryllium powder)	7440-41-7	X	N/A	N/A
		cadmium	7440-43-9	X	D006	D006
		carbon disulfide	75-15-0	X	F005	F005
		carbon tetrachloride	56-23-5	X	F001	F001
		chlorobenzene	108-90-7	X	F002	F002
		chloroform (trichloromethane)	67-66-3	X	D022	D022
		chromium	7440-47-3	X	D007	D007
		cyanide cleaning bath solutions	—	X	F009	F009
		cyanide plating bath solutions	—	X	F007	F007
		cresols	1319-77-3	X	F004	F004

Table A-5. (cont.) BN

BN IDC Numeric Code	Waste Description	Constituent/Compound/Item	CAS	Potential Hazardous Constituent, Chemical Property, or Hazardous Item (for supporting safe storage configurations)[HI, WG] See Note 26	Initial Gen Assigned HWN [WG, PC] See Note 29	WIPP WSPF Approved HWN [WS, AK]
550	SUPERCOMPACTED DEBRIS (cont.) See Note 22	electroplating sludges	—	X	F006	F006
		hexachlorobenzene	118-74-1	X	D032	D032
		hexachlorobutadiene	87-68-3	X	D033	D033
		hexachloroethane	67-72-1	X	D034	D034
		isobutanol (isobutyl alcohol)	78-83-1	X	F005	F005
		lead	7439-92-1	X	D008	D008 (115)
		mercury	7439-97-6	X	D009	D009
		methanol	67-56-1	X	See Note 2	See Note 2
		methylene chloride	75-09-2	X	F001/F002	F001/F002
		methyl ethyl ketone (2-butanone)	78-93-3	X	F005	F005
		nitrobenzene	98-95-3	X	F004	F004
		pentachlorophenol	87-86-5	X	D037	D037
		petroleum ether/Naptha	64742-82-1	X(208)	D001 (see Notes 2 & 30)	—
		pyridine	110-86-1	X	F005	F005
		selenium	7782-49-2	X	D010	D010
		silver	7440-22-4	X	D011	D011
		tetrachloroethylene (perclene)	127-18-4	X	F001/F002	F001/F002
		toluene	108-88-3	X	F005	F005
		trichloroethylene (TCE)	79-01-6	X	F001/F002	F001/F002
		trichlorofluoromethane	75-69-4	X	F001/F002	F001/F002
		vinyl chloride	75-01-4	X	D043	D043
		xylene	1330-20-7	X	See Note 2	See Note 2
597	P/U-LISTED LAB PCB DEBRIS WASTE	See Note 20		See Note 20	See Note 20	—
598	P/U-LISTED LAB PCB HOMOGENEOUS SOLIDS WASTE	See Note 20		See Note 20	See Note 20	—
599	LAB NON- PCB HOMOGENEOUS SOLIDS WASTE (NOT P/U-LISTED)	See Note 20		See Note 20	See Note 20	—

Table A-5. (cont.) BN

BN IDC Numeric Code	Waste Description	Constituent/Compound/Item	CAS	Potential Hazardous Constituent, Chemical Property, or Hazardous Item (for supporting safe storage configurations)[HI, WG] See Note 26	Initial Gen Assigned HWN [WG, PC] See Note 29	WIPP WSPF Approved HWN [WS, AK]
600	WMF-676 PCB CONTAMINATED DEBRIS See Note 18	1,1,1-trichloroethane (TCA)	71-55-6	X [46, 114, 122]	F001/F002 [46, 114, 122]	F001/F002 [46, 114, 122]
		1,1,2-trichloro-1,2,2-trifluoroethane	76-13-1	X	F001/F002	F001/F002
		1,1,2,2,-tetrachloro-1,2-difluoroethane	79-34-5	X	F001	F001
		1,1,2-trichloroethane	79-00-5	X	F002	
		1,2-dichloroethane	107-06-2	X	D028	D028
		1,2-dichlorobenzene	95-50-1	X	F002	F002
		1,1-dichloroethylene	75-35-4	X	D029	D029
		1,4-dichlorobenzene	106-46-7	X	D027	D027
		2,4-dinitrotoluene	121-14-2	X	D030	D030
		2-ethoxyethanol	110-80-5	X	F005	F005
		2-nitropropane	79-46-9	X	F005	F005
		acetone	67-64-1	X	See Note 2	See Note 2
		arsenic	7440-38-2	X	D004	D004
		asbestos	1332-21-4	X	N/A	N/A
		barium	7440-39-3	X	D005	D005
		benzene	71-43-2	X	F005	F005
		beryllium (not beryllium powder)	7440-41-7	X	N/A	N/A
		cadmium	7440-43-9	X	D006	D006
		carbon disulfide	75-15-0	X	F005	F005
		carbon tetrachloride	56-23-5	X	F001	F001
		chlorobenzene	108-90-7	X	F002	F002
		chloroform (trichloromethane)	67-66-3	X	D022	D022
		chromium	7440-47-3	X	D007	D007
		cyanide cleaning bath solutions	—	X	F009	F009
		cyanide plating bath solutions	—	X	F007	F007
		cyclohexane	110-82-7	X	See Note 2	See Note 2
		cresols	1319-77-3	X	F004	F004
		electroplating sludges	—	X	F006	F006
		ethyl benzene	100-41-4	X	See Note 2	See Note 2
		ethyl ether	60-29-7	X	See Note 2	See Note 2
		hexachlorobenzene	118-74-1	X	D032	D032

Table A-5. (cont.) BN

BN IDC Numeric Code	Waste Description	Constituent/Compound/Item	CAS	Potential Hazardous Constituent, Chemical Property, or Hazardous Item (for supporting safe storage configurations)[HI, WG] See Note 26	Initial Gen Assigned HWN [WG, PC] See Note 29	WIPP WSPF Approved HWN [WS, AK]
600	WMF-676 PCB CONTAMINATED DEBRIS (cont.) See Note 18	hexachlorobutadiene	87-68-3	X	D033	
		hexachloroethane	67-72-1	X	D034	D034
		hexane	110-54-3	X	N/A	N/A
		hydrofluoric acid (hydrogen fluoride)	7664-39-3	X	N/A	N/A
		isobutanol (isobutyl alcohol)	78-83-1	X	F005	F005
		lead	7439-92-1	X	D008	D008
		mercury	7439-97-6	X	D009	D009
		methanol	67-56-1	X	See Note 2	See Note 2
		methylene chloride	75-09-2	X	F001/F002	F001/F002
		methyl ethyl ketone (2-butanone)	78-93-3	X	F005	F005
		methyl isobutyl ketone	108-10-1	X	N/A	N/A
		n-butyl alcohol (butanol)	71-36-3	X	See Note 2	See Note 2
		nitrobenzene	98-95-3	X	F004	F004
		pentachlorophenol	87-86-5	X	D037	D037
		polychlorinated-biphenyls (PCBs)	1336-36-3	PCB [46]	N/A	N/A
		pyridine	110-86-1	X	F005	F005
		selenium	7782-49-2	X	D010	D010
		silver	7440-22-4	X	D011	D011
		tetrachloroethylene (perclene)	127-18-4	X	F001/F002	F001/F002
		toluene	108-88-3	X	F005	F005
		trichloroethylene (TCE)	79-01-6	X	F001/F002	F001/F002
		trichlorofluoromethane	75-69-4	X	F001/F002	F001/F002
		vinyl chloride	75-01-4	X	D043	D043
		xylene	1330-20-7	X	See Note 2	See Note 2
602	P/U-LISTED LAB NON-PCB HOMOGENEOUS SOLIDS WASTE	See Note 20		See Note 20	See Note 20	—
603	LAB PCB HOMOGENEOUS SOLIDS WASTE (NOT P/U-LISTED)	See Note 20		See Note 20	See Note 20	—
604	DEBRIS TSCA/PCB	polychlorinated-biphenyls (PCBs)	1336-36-3	PCB See Note 20.	See Note 20	—
605	ABSORBED LIQUIDS TSCA/PCB	polychlorinated-biphenyls (PCBs)	1336-36-3	See Note 20	See Note 20	—
607	FIRST/SECOND STAGE SLUDGE LIQUID	Not generated to date		Not generated to date	Not generated to date	—

Table A-5. (cont.) BN

BN IDC Numeric Code	Waste Description	Constituent/Compound/Item	CAS	Potential Hazardous Constituent, Chemical Property, or Hazardous Item (for supporting safe storage configurations)[HI, WG] See Note 26	Initial Gen Assigned HWN [WG, PC] See Note 29	WIPP WSPF Approved HWN [WS, AK]
608	SPECIAL SETUPS LIQUID	Not generated to date		Not generated to date	Not generated to date	
609	BUILDING 374 SLUDGE LIQUID	Not generated to date		Not generated to date	Not generated to date	
610	MISC. HOMOGENEOUS SOLID LIQUID	Not generated to date		Not generated to date	Not generated to date	—
611	SEWAGE AND POND SLUDGE LIQUID	Not generated to date		Not generated to date	Not generated to date	—
612	CAUSTIC WASTE LIQUID	Not generated to date		Not generated to date	Not generated to date	—
613	ACID WASTE LIQUID	Not generated to date		Not generated to date	Not generated to date	—
614	CEMENTED SLUDGE LIQUID	Not generated to date		Not generated to date	Not generated to date	—
615	OASIS WASTE LIQUID	Not generated to date		Not generated to date	Not generated to date	—
616	ORGANIC SETUPS PCB LIQUID	Not generated to date		Not generated to date	Not generated to date	—
617	SOLIDIFIED SOLUTIONS LIQUID	Not generated to date		Not generated to date	Not generated to date	—
770	DEBRIS FROM RPT-TRUW-83 GENERATORS	1,1,1-trichloroethane (TCA)	71-55-6	X [114,192]	F001/F002 [114,192]	—
		1,1,2-trichloro-1,2,2-trifluoroethane	76-13-1	X	F001/F002	—
		1,1,2,2,-tetrachloro-1,2-difluoroethane	79-34-5	X	F001	—
		1,1,2-trichloroethane	79-00-5	X	F002	—
		1,2-dichloroethane	107-06-2	X	D028	—
		1,2-dichlorobenzene	95-50-1	X	F002	—
		1,1-dichloroethylene	75-35-4	X	D029	—
		1,4-dichlorobenzene	106-46-7	X	D027	—
		2,4-dinitrotoluene	121-14-2	X	D030	—
		2-ethoxyethanol	110-80-5	X	F005	—
		2-nitropropane	79-46-9	X	F005 [97]	—
		acetone	67-64-1	X	See Note 2	—
		arsenic	7440-38-2	X	D004	—
		asbestos	1332-21-4	X	N/A	—
		barium	7440-39-3	X	D005	—
		benzene	71-43-2	X	F005	—
		beryllium (not beryllium powder)	7440-41-7	X	N/A	—
		cadmium	7440-43-9	X	D006	—
		carbon disulfide	75-15-0	X	F005	—
		carbon tetrachloride	56-23-5	X	F001	—
		chlorobenzene	108-90-7	X	F002	—
		chloroform (trichloromethane)	67-66-3	X	D022	—
		chromium	7440-47-3	X	D007	—

Table A-5. (cont.) BN

BN IDC Numeric Code	Waste Description	Constituent/Compound/Item	CAS	Potential Hazardous Constituent, Chemical Property, or Hazardous Item (for supporting safe storage configurations)[HI, WG] See Note 26	Initial Gen Assigned HWN [WG, PC] See Note 29	WIPP WSPF Approved HWN [WS, AK]
770	DEBRIS FROM RPT-TRUW-83 GENERATORS (cont.)	cyanide cleaning bath solutions	—	X	F009	—
		cyanide plating bath solutions	—	X	F007	—
		cresols	1319-77-3	X	F004	—
		electroplating sludges	—	X	F006	—
		hexachlorobenzene	118-74-1	X	D032	—
		hexachlorobutadiene	87-68-3	X	D033	—
		hexachloroethane	67-72-1	X	D034	—
		isobutanol (isobutyl alcohol)	78-83-1	X	F005	—
		Lead	7439-92-1	X	D008	—
		mercury	7439-97-6	X	D009/U151	—
		methanol	67-56-1	X	See Note 2	—
		methylene chloride	75-09-2	X	F001/F002	—
		methyl ethyl ketone (2-butanone)	78-93-3	X	F005	—
		nitrobenzene	98-95-3	X	F004	—
		pentachlorophenol	87-86-5	X	D037	—
		petroleum ether/Naptha	64742-82-1	X(208)	D001 (see Notes 2 & 30)	—
		pyridine	110-86-1	X	F005	—
		selenium	7782-49-2	X	D010	—
		silver	7440-22-4	X	D011	—
		tetrachloroethylene (perclene)	127-18-4	X	F001/F002	—
		toluene	108-88-3	X	F005	—
		trichloroethylene (TCE)	79-01-6	X	F001/F002	—
		trichlorofluoromethane	75-69-4	X	F001/F002	—
		vinyl chloride	75-01-4	X	D043	—
		xylene	1330-20-7	X	See Note 2	—
		acetonitrile	75-05-8	X	U003	—
		cyanides (soluble cyanide salts) not otherwise specified	—	X	P030	—
		dimethyl sulfate	77-78-1	X	U103	—
		hydrofluoric acid	7664-39-3	X	U134	—
		potassium cyanide	151-50-8	X	P098	—
		potassium silver cyanide	506-61-6	X	P099	—

Table A-5. (cont.) BN

BN IDC Numeric Code	Waste Description	Constituent/Compound/Item	CAS	Potential Hazardous Constituent, Chemical Property, or Hazardous Item (for supporting safe storage configurations)[HI, WG] See Note 26	Initial Gen Assigned HWN [WG, PC] See Note 29	WIPP WSPF Approved HWN [WS, AK]
770	DEBRIS FROM RPT-TRUW-83 GENERATORS (cont.)	sodium cyanide	143-33-9	X	P106	—
		1.4 dioxane	123-91-1	X	U108	—

Table A-6. Babcock and Wilcox hazardous constituents, chemical properties, or hazardous items identified in TRU waste.

BW IDC Numeric Code	Waste Description	Constituent/Compound/Item	CAS	Potential Hazardous Constituent, Chemical Property, or Hazardous Item (for supporting safe storage configurations)[HI, WG] See Note 26	Initial Gen Assigned HWN [WG, PC] See Note 29	WIPP WSPF Approved HWN [WS, AK]
515	PLASTICS, PAPER, CLOTH, ETC.	TBD	—	TBD	—	—
516	STEEL, AL, ELECTRICAL DEVICES-HANDHELD	TBD	—	TBD	—	—
517	HEAVY METALS, STEEL, AL, BRASS	TBD	—	TBD	—	—

Table A-7. Bendix (BX) hazardous constituents, chemical properties, or hazardous items identified in TRU waste.

BX IDC Numeric Code	Waste Description	Constituent/Compound/Item	CAS	Potential Hazardous Constituent, Chemical Property, or Hazardous Item (for supporting safe storage configurations)[HI, WG] See Note 26	Initial Gen Assigned HWN [WG, PC] See Note 29	WIPP WSPF Approved HWN [WS, AK]
111	MISCELLANEOUS SOURCE MATERIAL	TBD	—	TBD	—	—

Table A-8. INL CH2M-WG (CW) hazardous constituents, chemical properties, or hazardous items identified in TRU waste.

CW IDC Numeric Code	Waste Description	Constituent/Compound/Item	CAS	Potential Hazardous Constituent, Chemical Property, or Hazardous Item (for supporting safe storage configurations)[HI, WG] See Note 26	Initial Gen Assigned HWN [WG, PC] See Note 29	WIPP WSPF Approved HWN [WS, AK]
216	SLUDGE REPACKAGE PROJECT PCB CONTAMINATED INORGANIC SLUDGE	See Notes 9 and 15	See Notes 9 and 15	See Notes 9 and 15	See Notes 9 and 15	—

Table A-9. General Electric Vallecitos (GV) hazardous constituents, chemical properties, or hazardous items identified in TRU waste.

GV IDC Numeric Code	Waste Description	Constituent/Compound/Item	CAS	Potential Hazardous Constituent, Chemical Property, or Hazardous Item (for supporting safe storage configurations)[HI, WG] See Note 26	Initial Gen Assigned HWN [WG, PC] See Note 29	WIPP WSPF Approved HWN [WS, AK]
222	GE VNC HOT CELL DEBRIS WASTE	See notes 9 and 15	—	See Note 9 (103)	See Note 15 (103)	—

Table A-10. INL Auxiliary Reactor Area (IA) hazardous constituents, chemical properties, or hazardous items identified in TRU waste.

IA IDC Numeric Code	Waste Description	Constituent/Compound/Item	CAS	Potential Hazardous Constituent, Chemical Property, or Hazardous Item (for supporting safe storage configurations)[HI, WG] See Note 26	Initial Gen Assigned HWN [WG, PC] See Note 29	WIPP WSPF Approved HWN [WS, AK]
021	RADIOACTIVE MIXED LEAD WASTE	See ID-155 (192)	See ID-155 (192)	See ID-155 (192)	See ID-155 (192)	—
150	LABORATORY WASTE	See ID-155 (192)	See ID-155 (192)	See ID-155 (192)	See ID-155 (192)	—
152	PU NEUTRON SOURCES	See Note 27	See Note 27	See Note 27	See Note 27	—
		beryllium (not beryllium powder)	7440-41-7	X	N/A	—
153	COMBUSTIBLE LABORATORY WASTE	See ID-155 (51, 106, 192)	See ID-155 (192)	See ID-155 (192)	See ID-155 (192)	—
154	SAMPLE FUEL	See ID-155 (192)	See ID-155 (192)	See ID-155, (192)	See ID-155 (192)	—
155	TRU SCRAP	See ID-155 (192)	See ID-155 (192)	See ID-155 (192)	See ID-155 (192)	—
157	MISCELLANEOUS RADIONUCLIDE SOURCES	See ID-155 (192)	See ID-155 (192)	See ID-155 (192)	See ID-155 (192)	See Note 22

Table A-11. INL INTEC (IC) Hazardous constituents, chemical properties, or hazardous items identified in TRU waste.

IC IDC Numeric Code	Waste Description	Constituent/Compound/Item	CAS	Potential Hazardous Constituent, Chemical Property, or Hazardous Item (for supporting safe storage configurations)[HI, WG] See Note 26	Initial Gen Assigned HWN [WG, PC] See Note 29	WIPP WSPF Approved HWN [WS, AK]
021	RADIOACTIVE MIXED LEAD WASTE	See ID-155 [(192)]	See ID-155 [(192)]	See ID-155 [(192)]	See ID-155 [(192)]	—
150	LABORATORY WASTE	See ID-150 [(192)]	See ID-150 [(192)]	See ID-150 [(192)]	See ID-150 [(192)]	See Note 22
151	SOLIDIFIED FUEL SLUDGE	See Note 27	See Note 27	See Note 27	See Note 27	—
152	PU NEUTRON SOURCES	See Note 27	See Note 27	See Note 27	See Note 27	—
		beryllium (not beryllium powder)	7440-41-7	X	N/A	—
153	COMBUSTIBLE LABORATORY WASTE	See ID-155 [(51, 106, 192)]	See ID-155 [(192)]	See ID-155 [(192)]	See ID-155 [(192)]	—
154	SAMPLE FUEL	See ID-155 [(192)]	See ID-155 [(192)]	See ID-155, [(192)]	See ID-155 [(192)]	—
155	TRU SCRAP	See ID-155 [(192)]	See ID-155 [(192)]	See ID-155 [(192)]	See ID-155 [(192)]	—
156	CHEM CELL RIP-OUT	See ID-155 [(192)]	See ID-155 [(192)]	See ID-155 [(192)]	See ID-155 [(192)]	See Note 22
157	MISCELLANEOUS RADIONUCLIDE SOURCES	See ID-155 [(192)]	See ID-155 [(192)]	See ID-155 [(192)]	See ID-155 [(192)]	See Note 22
526	INTEC LABORATORY PCB DEBRIS WASTE (See Note 5)	See ID-150 [(51, 106, 192)]	See ID-150 [(51, 106, 192)]	See ID-150 [(51, 106, 192)]	See ID-150 [(51, 106, 192)]	—
		polychlorinated-biphenyls (PCBs)	1336-36-3	PCB	N/A	—
527	LABORATORY NON-PCB DEBRIS	See ID-150 [(51, 106, 192)]	See ID-150 [(51, 106, 192)]	See ID-150 [(51, 106, 192)]	See ID-150 [(51, 106, 192)]	See Note 22
601	ALPHA LOW LEVEL LAB. WIPP ANALYTICAL WASTE	See ID-150 [(192)]	See ID-150 [(192)]	See ID-150 [(192)]	See ID-150 [(192)]	See Note 22
603	LABORATORY HOMOGENEOUS SOLIDS WASTE (see Note 5)	See ID-150 [(51, 106, 192)]	See ID-150 [(51, 106, 192)]	See ID-150 [(51, 106, 192)]	See ID-150 [(51, 106, 192)]	—
		polychlorinated-biphenyls (PCBs)	1336-36-3	PCB	N/A	—
604	CWI CH DEBRIS FROM RE-PACKAGING AMWTP RH DEBRIS	See ID-155 [(192)]	See ID-155 [(192)]	See ID-155 [(192)]	See ID-155 [(192)]	
605	CWI CH DEBRIS FROM RE-PACKAGING AMWTP RH DEBRIS – NON-RPT-TRUW-83 IDCS	See ID-155 [(192)]	See ID-155 [(192)]	See ID-155 [(192)]	See ID-155 [(192)]	
606	CWI CH HOMOGENEOUS SOLIDS FROM RE-PACKAGING AMWTP RH DEBRIS - WIPP APPROVED IDCS	See ID-155 [(192)]	See ID-155 [(192)]	See ID-155 [(192)]	See ID-155 [(192)]	—
607	CWI CH HOMOGENEOUS SOLIDS FROM RE-PACKAGING AMWTP RH DEBRIS – NON-WIPP APPROVED IDCS	See ID-155 [(192)]	See ID-155 [(192)]	See ID-155 [(192)]	See ID-155 [(192)]	—

Table A-12. Idaho National Laboratory (ID) hazardous constituents, chemical properties, or hazardous items identified in TRU waste.

ID IDC Numeric Code	Waste Description	Constituent/Compound/Item	CAS	Potential Hazardous Constituent Chemical Property, or Hazardous Item (for supporting safe storage configurations)[HI, WG] See Note 26	Initial Gen Assigned HWN[WG, PC] See Note 29	WIPP WSPF Approved HWN[WS, AK]
021	RADIOACTIVE MIXED LEAD WASTE	See ID-155 [192]	See ID-155 [192]	See ID-155 [192]	See ID-155 [192]	See Note 22
150	LABORATORY WASTE [192]	1,1,1-trichloroethane (TCA) [192]	71-55-6	X [51, 106, 192]	F001/F002 [106, 192]	See Note 22
		1,1,2-trichloro-1,2,2-trifluoroethane	76-13-1	X	F001/F002	
		1,1,2-trichloroethane	79-00-5	X	F002	
		1,1,2,2-tetrachloro-1,2-difluoroethane	76-12-0	X	F001	
		1,1-dichlorethylene	75-35-4	X	D029	
		1,2-dichlorobenzene	95-50-1	X	F002	
		1,2-dichloroethane	107-06-2	X	D028	
		1,4 dichlorobenzene	106-46-7	X	D027	
		1,4-diethyleneoxide	123-91-1	X	U108	
		2,4-dinitrotoluene	121-14-2	X	D030	
		2-ethoxyethanol	110-80-5	X	F005	
		2-nitropropane	79-46-9	X	F005	
		acetonitrile	75-05-8	X	U003	
		arsenic (various compounds)	7440-38-2	X	D004	
		barium (various compounds)	7440-39-3	X	D005	
		benzene	71-43-2	X	F005/D018	
		cadmium (various compounds)	7440-43-9	X	D006	
		carbon disulfide	75-15-0	X	F005/D019	
		carbon tetrachloride	56-23-5	X	F001	
		chlorobenzene	108-90-7	X	F002/D021	
		chloroform (trichloromethane)	67-66-3	X	D022	
		chromium (various compounds)	7440-47-3	X	D007	
		cresols	1319-77-3	X	F004/D026	
		cresylic acid	95-48-7	X	F004	
		cyanides (soluble cyanide salts) not otherwise specified	—	X	P030	
		dimethyl sulfate	77-78-1	X	U103	
		hexachlorobenzene	118-74-1	X	D032	
		hexachlorobutadiene	87-68-3	X	D033	
		hexachloroethane	67-72-1	X	D034	
		hydrofluoric acid	7664-39-3	X	U134	
		isobutanol	78-83-1	X	F005	
		lead (various compounds)	7439-92-1	X	D008	

Table A-12. (cont.) ID

ID IDC Numeric Code	Waste Description	Constituent/Compound/Item	CAS	Potential Hazardous Constituent Chemical Property, or Hazardous Item (for supporting safe storage configurations)[HI, WG] See Note 26	Initial Gen Assigned HWN [WG, PC] See Note 29	WIPP WSPF Approved HWN [WS, AK]
150	LABORATORY WASTE [192] (cont.)	mercury (various compounds)	7439-97-6	X	D009/U151	See Note 22
		methyl ethyl ketone (2-butanone)	78-93-3	X	F005	
		methylene chloride	75-09-2	X	F001/F002/D035	
		nitrobenzene	98-95-3	X	F004/D036	
		pentachlorophenol	87-86-5	X	D037	
		potassium cyanide	151-50-8	X	P098	
		potassium silver cyanide	506-61-6	X	P099	
		pyridine	110-86-1	X	F005/D037	
		selenium (various compounds)	7782-49-2	X	D010	
		Silver (various compounds)	7440-22-4	X	D011	
		sodium cyanide	143-33-9	X	P106	
		spent cyanide plating bath solutions from electroplating operations [192]	—	X	F007	
		spent stripping and cleaning bath solutions from electroplating operations [192]	—	X	F009	
		tetrachloroethylene (perclene)	127-18-4	X	F001/F002/D039	
		toluene [192]	108-88-3	X	F005	
		trichloroethylene (TCE) [192]	79-01-6	X	F001/F002/D040	
		trichlorofluoroethylene	359-29-5	X	F001	
		trichlorofluoromethane [192]	75-69-4	X	F001/F002	
		vinyl chloride [192]	75-01-4	X	D043	
		wastewater treatment sludges from electroplating operations [192]	—	X	F006	
152	PU NEUTRON SOURCES	See NOTE 27	See NOTE 27	See NOTE 27	See NOTE 27	—
		beryllium (not beryllium powder)	7440-41-7	X	N/A	
153	COMBUSTIBLE LABORATORY WASTE	See ID-155 [51, 106, 192]	See ID-155 [192]	See ID-155 [192]	See ID-155 [192]	See Note 22
154	SAMPLE FUEL	See ID-155 [192]	See ID-155 [192]	See ID-155, [192]	See ID-155 [192]	See Note 22
155	TRU SCRAP	1,1,1-trichloroethane (TCA)	71-55-6	X [192]	F001/F002 [192, 193]	See Note 22
		1,1,2-trichloro-1,2,2-trifluoroethane	76-13-1	X	F001/F002	
		1,1,2-trichloroethane	79-00-5	X	F002	
		1,1,2,2-tetrachloro-1,2-difluoroethane	76-12-0	X	F001	
		1,1-dichlorethylene	75-35-4	X	D029	

Table A-12. (cont.) ID

ID IDC Numeric Code	Waste Description	Constituent/Compound/Item	CAS	Potential Hazardous Constituent Chemical Property, or Hazardous Item (for supporting safe storage configurations)[HI, WG] See Note 26	Initial Gen Assigned HWN [WG, PC] See Note 29	WIPP WSPF Approved HWN [WS, AK]
155	TRU SCRAP (cont.)	1,2-dichlorobenzene	95-50-1	X	F002	—
		1,2-dichloroethane	107-06-2	X	D028	
		1,4 dichlorobenzene	106-46-7	X	D027	
		2,4-dinitrotoluene	121-14-2	X	D030	
		2-ethoxyethanol	110-80-5	X	F005	
		2-nitropropane	79-46-9	X	F005	
		arsenic (various compounds)	7440-38-2	X	D004	
		barium (various compounds)	7440-39-3	X	D005	
		benzene	71-43-2	X	F005	
		cadmium (various compounds)	7440-43-9	X	D006	
		carbon disulfide	75-15-0	X	F005	
		carbon tetrachloride	56-23-5	X	F001	
		chlorobenzene	108-90-7	X	F002	
		chloroform (trichloromethane)	67-66-3	X	D022	
		chromium (various compounds)	7440-47-3	X	D007	
		cresols	1319-77-3	X	F004	See Note 22
		cresylic acid	95-48-7	X	F004	
		cyanide cleaning bath solutions	—	X	F009	
		cyanide plating bath solutions	—	X	F007	
		hexachlorobenzene	118-74-1	X	D032	
		hexachloroethane	67-72-1	X	D034	
		isobutanol	78-83-1	X	F005	
		lead (various compounds)	7439-92-1	X	D008	
		mercury (various compounds)	7439-97-6	X	D009	
		methyl ethyl ketone (2-butanone)	78-93-3	X	F005	
		methylene chloride	75-09-2	X	F001/F002	
		nitrobenzene	98-95-3	X	F004	
		pentachlorophenol	87-86-5	X	D037	
		pyridine	110-86-1	X	F005	
		selenium (various compounds)	7782-49-2	X	D010	
		silver (various compounds)	7440-22-4	X	D011	
		toluene	108-88-3	X	F005	
		trichloroethylene (TCE)	79-01-6	X	F001/F002	
		trichlorofluoroethylene	359-29-5	X	F001	

Table A-12. (cont.) ID

ID IDC Numeric Code	Waste Description	Constituent/Compound/Item	CAS	Potential Hazardous Constituent Chemical Property, or Hazardous Item (for supporting safe storage configurations)[HI, WG] See Note 26	Initial Gen Assigned HWN [WG, PC] See Note 29	WIPP WSPF Approved HWN [WS, AK]
155	TRU SCRAP (cont.)	trichlorofluoromethane	75-69-4	X	F001/F002	See Note 22
		vinyl chloride	75-01-4	X	D043	
		wastewater treatment sludges from electroplating operations	—	X	F006	
157	MISCELLANEOUS RADIONUCLIDE SOURCES	See ID-155 [192]	See ID-155 [192]	See ID-155 [192]	See ID-155 [192]	See Note 22
175	DRCT SCRAP METAL WASTE FROM TAN	See ID-155 [192]	See ID-155 [192]	See ID-155 [192]	See ID-155 [192]	See Note 22
337	PLASTIC, TEFLON, WASH, PVC, RET. RF TRU	See ID-155 [192]	See ID-155 [192]	See ID-155 [192]	See ID-155 [192]	See Note 22

Table A-13. INL – Central Facilities Area (IF) hazardous constituents, chemical properties, or hazardous items identified in TRU waste.

IF IDC Numeric Code	Waste Description	Constituent/Compound/Item	CAS	Potential Hazardous Constituent, Chemical Property, or Hazardous Item (for supporting safe storage configurations)[HI, WG] See Note 26	Initial Gen Assigned HWN [WG, PC] See Note 29	WIPP WSPF Approved HWN [WS, AK]
021	RADIOACTIVE MIXED LEAD WASTE	See ID-155 [192]	See ID-155 [192]	See ID-155 [192]	See ID-155 [192]	—
150	LABORATORY WASTE	See ID-155 [192]	See ID-155 [192]	See ID-155 [192]	See ID-155 [192]	See Note 22
		potential corrosives if liquids exceed the WIPP-WAC limit	—	X [1]	D002	
152	PU NEUTRON SOURCES	See NOTE 27	See NOTE 27	See NOTE 27	See NOTE 27	—
		beryllium (not beryllium powder)	7440-41-7	X	N/A	
153	COMBUSTIBLE LABORATORY WASTE	See ID-155 [51, 106, 192]	See ID-155 [192]	See ID-155 [192]	See ID-155 [192]	—
154	SAMPLE FUEL	See ID-155 [192]	See ID-155 [192]	See ID-155, [192]	See ID-155 [192]	—
155	TRU SCRAP	See ID-155 [192]	See ID-155 [192]	See ID-155 [192]	See ID-155 [192]	—
157	MISC. RADIONUCLIDE SOURCES	See ID-155 [192]	See ID-155 [192]	See ID-155 [192]	See ID-155, [192]	See Note 22

Table A-14. INL – Naval Reactors Facility (IN) hazardous constituents, chemical properties, or hazardous items identified in TRU waste.

IN IDC Numeric Code	Waste Description	Constituent/Compound/Item	CAS	Potential Hazardous Constituent, Chemical Property, or Hazardous Item (for supporting safe storage configurations)[HI, WG] See Note 26	Initial Gen Assigned HWN [WG, PC] See Note 29	WIPP WSPF Approved HWN [WS, AK]
021	RADIOACTIVE MIXED LEAD WASTE	See ID-155 [(192)]	See ID-155 [(192)]	See ID-155 [(192)]	See ID-155 [(192)]	See Note 22
150	LABORATORY WASTE	See ID-155 [(192)]	See ID-155 [(192)]	See ID-155 [(192)]	See ID-155 [(192)]	—
		potential corrosives if liquids exceed the WIPP-WAC limit	—	X [(1)]	D002	
152	PU NEUTRON SOURCES	See NOTE 27	See NOTE 27	See NOTE 27	See NOTE 27	—
153	COMBUSTIBLE LAB WASTE	See ID-155 [(192)]	See ID-155 [(192)]	See ID-155 [(192)]	See ID-155 [(192)]	See Note 22
154	SAMPLE FUEL	See ID-155 [(192)]	See ID-155 [(192)]	See ID-155, [(192)]	See ID-155 [(192)]	—
155	TRU SCRAP	See ID-155 [(192)]	See ID-155 [(192)]	See ID-155 [(192)]	See ID-155 [(192)]	See Note 22

Table A-15. INL – Critical Infrastructure Test Range Complex (IP) hazardous constituents, chemical properties, or hazardous items identified in TRU waste.

IP IDC Numeric Code	Waste Description	Constituent/Compound/Item	CAS	Potential Hazardous Constituent, Chemical Property, or Hazardous Item (for supporting safe storage configurations)[HI, WG] See Note 26	Initial Gen Assigned HWN [WG, PC] See Note 29	WIPP WSPF Approved HWN [WS, AK]
021	RADIOACTIVE MIXED LEAD WASTE	See ID-155 [(192)]	See ID-155 [(192)]	See ID-155 [(192)]	See ID-155 [(192)]	—
150	LABORATORY WASTE	See ID-155 [(192)]	See ID-155 [(192)]	See ID-155 [(192)]	See ID-155 [(192)]	—
		potential corrosives if liquids exceed the WIPP-WAC limit	—	X [(1)]	D002	—
152	PU NEUTRON SOURCES	See NOTE 27	See NOTE 27	See NOTE 27	See NOTE 27	—
153	COMBUSTIBLE LAB WASTE	See ID-155 [(192)]	See ID-155 [(192)]	See ID-155 [(192)]	See ID-155 [(192)]	—
154	SAMPLE FUEL	See ID-155 [(192)]	See ID-155 [(192)]	See ID-155, [(192)]	See ID-155 [(192)]	—
155	TRU SCRAP	See ID-155 [(192)]	See ID-155 [(192)]	See ID-155 [(192)]	See ID-155 [(192)]	—
157	MISC. RADIONUCLIDE SOURCES	See ID-155 [(192)]	See ID-155 [(192)]	See ID-155 [(192)]	See ID-155, [(192)]	—

Table A-16. INL – Test Reactor Area (IR) hazardous constituents, chemical properties, or hazardous items identified in TRU waste.

IR IDC Numeric Code	Waste Description	Constituent/Compound/Item	CAS	Potential Hazardous Constituent, Chemical Property, or Hazardous Item (for supporting safe storage configurations)[HI, WG] See Note 26	Initial Gen Assigned HWN [WG, PC] See Note 29	WIPP WSPF Approved HWN [WS, AK]
021	RADIOACTIVE MIXED LEAD WASTE	See ID-155 [(192)]	See ID-155 [(192)]	See ID-155 [(192)]	See ID-155 [(192)]	—
150	LABORATORY WASTE	See ID-155 [(192)]	See ID-155 [(192)]	See ID-155 [(192)]	See ID-155 [(192)]	—
		potential corrosives if liquids exceed the WIPP-WAC limit	—	X	D002	—
152	PU NEUTRON SOURCES	See NOTE 27	See NOTE 27	See NOTE 27	See NOTE 27	—
153	COMBUSTIBLE LAB WASTE	See ID-155 [(192)]	See ID-155 [(192)]	See ID-155 [(192)]	See ID-155 [(192)]	—
154	SAMPLE FUEL	See ID-155 [(192)]	See ID-155 [(192)]	See ID-155 [(192)]	See ID-155 [(192)]	See Note 22
155	TRU SCRAP	See ID-155 [(192)]	See ID-155 [(192)]	See ID-155 [(192)]	See ID-155 [(192)]	—
157	MISCELLANEOUS RADIONUCLIDE SOURCES	See ID-155 [(192)]	See ID-155 [(192)]	See ID-155 [(192)]	See ID-155 [(192)]	See Note 22
603	Advanced Test Reactor (ATR) CH-TRU ABSORBED LIQUIDS	N/A [(190)] (see Note 5)	N/A	N/A [(190)] (see Note 5)	N/A [(190)] (see Note 5)	—

Table A-17. INL – Test Area North (IT) hazardous constituents, chemical properties, or hazardous items identified in TRU waste.

IT IDC Numeric Code	Waste Description	Constituent/Compound/Item	CAS	Potential Hazardous Constituent, Chemical Property, or Hazardous Item (for supporting safe storage configurations)[HI, WG] See Note 26	Initial Gen Assigned HWN [WG, PC] See Note 29	WIPP WSPF Approved HWN [WS, AK]
021	RADIOACTIVE MIXED LEAD WASTE	See ID-155 [(192)]	See ID-155 [(192)]	See ID-155 - [(192)]	See ID-155 - [(192)]	—
150	LABORATORY WASTE	See ID-155 [(192)]	See ID-155 [(192)]	See ID-155 [(192)]	See ID-155 [(192)]	—
		potential corrosives if liquids exceed the WIPP-WAC limit	—	X	D002	—
152	PU NEUTRON SOURCES	See NOTE 27	See NOTE 27	See NOTE 27	See NOTE 27	—
		beryllium (not beryllium powder)	7440-41-7	X [(1)]	N/A	—
153	COMBUSTIBLE LAB WASTE	See ID-155 [(192)]	See ID-155 [(192)]	See ID-155 [(192)]	See ID-155 [(192)]	—
154	SAMPLE FUEL	See ID-155 [(192)]	See ID-155 [(192)]	See ID-155 [(192)]	See ID-155 [(192)]	—
155	TRU SCRAP	See ID-155 [(192)]	See ID-155 [(192)]	See ID-155 [(192)]	See ID-155 [(192)]	—
157	MISC. RADIONUCLIDE SOURCES	See ID-155 [(192)]	See ID-155 [(192)]	See ID-155 [192]	See ID-155 [(192)]	See Note 22
175	DRCT SCRAP METAL WASTE FROM TAN	See ID-155 [(192)]	See ID-155 [(192)]	See ID-155 [(192)]	See ID-155 [(192)]	—

Table A-18. INL – Radioactive Waste Management Complex (IW) hazardous constituents, chemical properties, or hazardous items identified in TRU waste.

IW IDC Numeric Code	Waste Description	Constituent/Compound/Item	CAS	Potential Hazardous Constituent, Chemical Property, or Hazardous Item (for supporting safe storage configurations)[HI, WG] See Note 26	Initial Gen Assigned HWN [WG, PC] See Note 29	WIPP WSPF Approved HWN [WS, AK]
005	EVAPORATOR SALTS-RETRIEVED RF TRU	IDC superseded. See SD-176	IDC superseded. See SD-176	IDC superseded. See SD-176	IDC superseded. See SD-176	—
021	RADIOACTIVE MIXED LEAD WASTE	See ID-155 [192]	See ID-155 [192]	See ID-155 [192]	See ID-155 [192]	—
150	LABORATORY WASTE	See ID-155 [192]	See ID-155 [192]	See ID-155 [192]	See ID-155 [192]	
152	PU NEUTRON SOURCES	See NOTE 27	See NOTE 27	See NOTE 27	See NOTE 27	—
153	COMBUSTIBLE LAB WASTE	See ID-155 [192]	See ID-155 [192]	See ID-155 [192]	See ID-155 [192]	—
154	SAMPLE FUEL	See ID-155 [192]	See ID-155 [192]	See ID-155 [192]	See ID-155 [192]	—
155	TRU SCRAP	See ID-155 [192]	See ID-155 [192]	See ID-155 [192]	See ID-155 [192]	See Note 22
157	MISCELLANEOUS RADIONUCLIDE SOURCES	See ID-155 [192]	See ID-155 [192]	See ID-155 [192]	See ID-155 [192]	See Note 22
176	RWMC HOMOGENEOUS SOLIDS	See SD-176	See SD-176	See SD-176	See SD-176	
177	RWMC HETEROGENEOUS DEBRIS	See SD-177	See SD-177	See SD-177	See SD-177	
178	RWMC Soil	See SD-178	See SD-178	See SD-178	See SD-178	
179	PRE-1980 SDA WASTE RETRIEVAL BINS	IDC superseded. See SD-179	See SD-179	See SD-179	See SD-179	—
337	PLASTIC, TEFLON, WASHABLES, PVC	See ID-155 [192]	See ID-155 [192]	See ID-155 [192]	See ID-155 [192]	—
526	LABORATORY PCB DEBRIS WASTE	See ID-150 [51, 106, 145, 192]	See ID-150 [51, 106, 145, 192]	See ID-150 [51, 106, 145, 192]	See ID-150 [51, 106, 145, 192]	—
		polychlorinated byphenyls (PCBs)	1336-36-3	PCB	N/A	—
527	LABORATORY NON-PCB DEBRIS	See ID 150 [51, 106, 147, 192]	See ID 150 [51, 106, 147, 192]	See ID 150 [51, 106, 147, 192]	See ID 150 [51, 106, 147, 192]	See Note 22
603	LABORATORY HOMOGENEOUS SOLIDS WASTE	See ID-150 [51, 106, 147, 192]	See ID-150 [51, 106, 147, 192]	See ID-150 [51, 106, 147, 192]	See ID-150 [51, 106, 147, 192]	—
		polychlorinated-biphenyls (PCBs)	1336-36-3	PCB	N/A	—

Table A-19. J. C. Haynes (JH) hazardous constituents, chemical properties, or hazardous items identified in TRU waste.

JH IDC Numeric Code	Waste Description	Constituent/Compound/Item	CAS	Potential Hazardous Constituent, Chemical Property, or Hazardous Item (for supporting safe storage configurations)[HI, WG] See Note 26	Initial Gen Assigned HWN [WG, PC] See Note 29	WIPP WSPF Approved HWN [WS, AK]
826	COMBUSTIBLE EQUIPMENT BOXES AND FLOOR SWEEPINGS	none identified	—	X [(13)]	—	—
827	SOLID TRASH AND DRY LAB. MATERIAL	lead	7439-92-1	X [(13)]	—	—

Table A-20. Los Alamos National Laboratory (LA) hazardous constituents, chemical properties, or hazardous items identified in TRU waste.

LA IDC Numeric Code	Waste Description	Constituent/Compound/Item	CAS	Potential Hazardous Constituent, Chemical Property, or Hazardous Item (for supporting safe storage configurations)[HI, WG] See Note 26	Initial Gen Assigned HWN [WG, PC] See Note 29	WIPP WSPF Approved HWN [WS, AK]
007	MIXED HETEROGENEOUS DEBRIS FROM TA-55 (see Note 24)	1,1,1-trichloroethane (TCA) [(181, 187)]	71-55-6	X [(181, 187)]	F001/F002 [(181, 187)]	See Note 22
		1,1,2-trichloro-1,2,2-trifluoroethane	76-13-1	X	F001/F002	
		acetone	67-64-1	X	See Note 2	
		arsenic	7440-38-2	X	D004	
		asbestos	1332-21-4	X	N/A	
		barium	7440-39-3	X	D005	
		benzene	71-43-2	X	F005/D018	
		beryllium (not beryllium powder)	7440-41-7	X	N/A	
		butanol	71-36-3	X	See Note 2	
		cadmium	7440-43-9	X	D006	
		carbon tetrachloride	56-23-5	X	F001/D019	
		chlorobenzene	108-90-7	X	F002/D021	
		chloroform (trichloromethane)	67-66-3	X	D022	
		chromium	7440-47-3	X	D007	
		ethyl ether	60-29-7	X	See Note 2	
		hydrofluoric acid	7664-39-3	X	N/A	
		lead	7439-92-1	X	D008	
		mercury	7439-97-6	X	D009	
		methanol	67-56-1	X	See Note 2	
		methylene chloride	75-09-2	X	F001/F002	
		methyl ethyl ketone (2-butanone)	78-93-3	X	F005/D035	

Table A-20 (cont.) LA

LA IDC Numeric Code	Waste Description	Constituent/Compound/Item	CAS	Potential Hazardous Constituent, Chemical Property, or Hazardous Item (for supporting safe storage configurations)[HI, WG] See Note 26	Initial Gen Assigned HWN [WG, PC] See Note 29	WIPP WSPF Approved HWN [WS, AK]
007	MIXED HETEROGENEOUS DEBRIS FROM TA-55 (cont.) (see Note 24)	nitrate salt	—	X	See Notes 2 and 8	See Note 22
		perchloric acid	7601-90-3	X	See Notes 2 and 8	
		pyridine	110-86-1	X	F005/D038	
		selenium	7782-49-2	X	D010	
		silver	7440-22-4	X	D011	
		sodium metal	7440-23-5	X	See Notes 2 and 8	
		tetrachloroethylene (perclene)	127-18-4	X	F001/F002/ D039	
		toluene	108-88-3	X	F005	
		trichloroethylene (TCE)	79-01-6	X	F001/F002/D040	
		various corrosives (e.g., nitric acid and sodium and potassium hydroxide)	—	-	See Note 2	
		xylene	1330-20-7	X	See Note 2	
008	MIXED HETEROGENEOUS DEBRIS FROM TA-3 (see Notes 24 and 28)	1,1,1-trichloroethane (TCA) [184, 207]	71-55-6	X [184, 207]	F001/F002 [184, 207]	—
		1,1,2-trichloro-1,2,2-trifluoroethane	76-13-1	X	F002	—
		arsenic	7440-38-2	X	D004	—
		barium	7440-39-3	X	D005	—
		benzene	71-43-2	X	F005/D018	—
		beryllium (not beryllium powder)	7440-41-7	X	N/A	—
						—
		cadmium	7440-43-9	X	D006	—
		carbon tetrachloride	56-23-5	X	F001/D019	—
		chlorobenzene	108-90-7	X	F002/D021	—
		chloroform (trichloromethane)	67-66-3	X	D022	—
		chromium	7440-47-3	X	D007	—
		cresol/cresylic acid	1319-77-3	X	F004/D026	—
		1,4-dichlorobenzene	106-46-7	X	D027	—
		1,2-dichloroethane	107-06-2	X	D028	—
		1,1-dichloroethylene	75-35-4	X	D029	—
		2,4-dinitrotoluene	121-14-2	X	D030	—
		lead	7439-92-1	X	D008	—
		mercury	7439-97-6	X	D009	—
		methylene chloride	75-09-2	X	F001/F002	—
		methyl ethyl ketone (2-butanone)	78-93-3	X	F005/D035	—
		nitrobenzene	98-95-3	X	F004/D036	—

Table A-20 (cont.) LA

LA IDC Numeric Code	Waste Description	Constituent/Compound/Item	CAS	Potential Hazardous Constituent, Chemical Property, or Hazardous Item (for supporting safe storage configurations)[HI, WG] See Note 26	Initial Gen Assigned HWN[WG, PC] See Note 29	WIPP WSPF Approved HWN[WS, AK]
008	MIXED HETEROGENEOUS DEBRIS FROM TA-3 (cont.) (see Notes 24 and 28)	pentachlorophenol	87-86-5	X	D037	—
		pyridine	110-86-1	X	F005/D038	—
		selenium	7782-49-2	X	D010	—
		silver	7440-22-4	X	D011	—
						—
		tetrachloroethylene (perclene)	127-18-4	X	F001/F002/ D039	—
		toluene	108-88-3	X	F005	—
		trichloroethylene (TCE)	79-01-6	X	F001/F002/D040	—
		vinyl chloride	75-01-4	X	D043	—
009	HETEROGENEOUS DEBRIS FROM THE TA-21 DP WEST FACILITY (see Notes 24 and 25)	1,1,1-trichloroethane (TCA)[181, 186, 188]	71-55-6	X[181, 186, 188]	F001/F002[181, 186, 188]	See Note 22
		1,1,2-trichloro-1,2,2-trifluoroethane	76-13-1	X	F001/F002	
		1,1,2,2,-tetrachloroethane	79-34-5	X	N/A	
		methylene chloride	75-09-2	X	F001/F002	
		carbon tetrachloride	56-23-5	X	F001	
		chlorobenzene	108-90-7	X	F002	
		benzene	71-43-2	X	F005	
		arsenic	7440-38-2	X	D004	
		barium	7440-39-3	X	D005	
		cadmium	7440-43-9	X	D006	
		chromium	7440-47-3	X	D007	
		lead	7439-92-1	X	D008	
		mercury	7439-97-6	X	D009	
		selenium	7782-49-2	X	D010	
		silver	7440-22-4	X	D011	
		chloroform (trichloromethane)	67-66-3	X	D022	
		hydrofluoric acid	7664-39-3	X	N/A	
		methyl ethyl ketone (2-butanone)	78-93-3	X	F005	
		pyridine	110-86-1	X	F005	
		REZ-N-bond (methylene chloride)	—	X	F002	
		tetrachloroethylene (perclene)	127-18-4	X	F001/F002	
		trichloroethylene	79-01-6	X	F001/F002	
		toluene	108-88-3	X	F005	

Table A-20 (cont.) LA

LA IDC Numeric Code	Waste Description	Constituent/Compound/Item	CAS	Potential Hazardous Constituent, Chemical Property, or Hazardous Item (for supporting safe storage configurations)[HI, WG] See Note 26	Initial Gen Assigned HWN [WG, PC] See Note 29	WIPP WSPF Approved HWN [WS, AK]
009	HETEROGENEOUS DEBRIS FROM THE TA-21 DP WEST FACILITY (cont.) (see Notes 24 and 25)	acetone	67-64-1	X	See Note 2	See Note 22
		butanol	71-36-3	X	See Note 2	
		ethyl ether	60-29-7	X	See Note 2	
		methanol	67-56-1	X	See Note 2	
		methyl isobutyl ketone	108-10-1	X	See Note 2	
		unvented aerosol cans	—	X[186, 188]	D001	
		various corrosives (e.g., used HF nitric acid and sodium hydroxide)	—	-	See Note 2	
		various chloride salts (e.g., calcium)	—		See Note 2	
		xylene	1330-20-7	X	See Note 2	
010	HETEROGENEOUS DEBRIS WASTE FROM TA-50 (see Notes 24 and 25)	1,1,1-trichloroethane (TCA)[181, 186, 189]	71-55-6	X[181, 186, 189]	F001/F002[181,186, 189]	See Note 22
		1,1,2-trichloroethane	79-00-5	X	F002	
		1,1,2-trichloro-1,2,2-trifluoroethane	76-13-1	X	F001/F002	
		methylene chloride	75-09-2	X	F001/F002	
		chlorobenzene	108-90-7	X	F002	
		2-ethoxyethanol	110-80-5	X	F005	
		2-nitropropane	79-46-9	X	F005	
		benzene	71-43-2	X	F005	
		carbon disulfide	75-15-0	X	F005	
		carbon tetrachloride	56-23-5	X	F001	
		chloroform (trichloromethane)	67-66-3	X	D022	
		1,4-dichlorobenzene	106-46-7	X	D027	
		1,2-dichloroethane	107-06-2	X	D028	
		1,1-dichloroethylene	75-35-4	X	D029	
		1,2-dichlorobenzene	95-50-1	X	F002	
		2,4-dinitrotoluene	121-14-2	X	D030	
		pentachlorophenol	87-86-5	X	D037	
		cresol/cresylic acid	1319-77-3	X	F004	
		nitrobenzene	98-95-3	X	F004	
		hydrofluoric acid	7664-39-3	X	N/A	
		isobutanol (isobutyl alcohol)	78-83-1	X	F005	
		methyl ethyl ketone (2-butanone)	78-93-3	X	F005	
		arsenic	7440-38-2	X	D004	
		barium	7440-39-3	X	D005	

Table A-20 (cont.) LA

LA IDC Numeric Code	Waste Description	Constituent/Compound/Item	CAS	Potential Hazardous Constituent, Chemical Property, or Hazardous Item (for supporting safe storage configurations)[HI, WG] See Note 26	Initial Gen Assigned HWN [WG, PC] See Note 29	WIPP WSPF Approved HWN [WS, AK]
010	HETEROGENEOUS DEBRIS WASTE FROM TA-50 (see Notes 24 and 25) (cont.)	cadmium	7440-43-9	X	D006	See Note 22
		chromium (various forms)	7440-47-3	X	D007	
		lead	7439-92-1	X	D008	
		mercury	7439-97-6	X	D009	
		REZ-N-Bond (methylene chloride)	—	X	F002	
		selenium	7782-49-2	X	D010	
		silver	7440-22-4	X	D011	
		pyridine	110-86-1	X	F005	
		Tap Magic (1,1,1-trichloroethane)	—	X	F002	
		tetrachloroethylene (perclene)	127-18-4	X	F001/F002	
		trichloroethylene	79-01-6	X	F001/F002	
		trichlorofluoromethane	75-69-4	X	F001/F002	
		toluene	108-88-3	X	F005	
		electroplating sludges	—	X	F006	
		cyanide plating bath solutions	—	X	F007	
		cyanide cleaning bath solutions	—	X	F009	
		acetone	67-64-1	X	See Note 2	
		cyclohexane	110-82-7	X	See Note 2	
		ethyl benzene	100-41-4	X	See Note 2	
		ethyl ether	60-29-7	X	See Note 2	
		methanol	67-56-1	X	See Note 2	
		methyl isobutyl ketone	108-10-1	X	See Note 2	
		n-butyl alcohol (butanol)	71-36-3	X	See Note 2	
		unvented aerosol cans	—	X [186, 189]	D001	
		various nitrate oxidizers (aluminum and ferric)	—	-	See Note 2	
		various corrosives	—	X	See Note 2	
		vinyl chloride	75-01-4	X	D043	

Table A-21. Lawrence Berkeley National Laboratory (LB) hazardous constituents, chemical properties, or hazardous items identified in TRU waste.

LB IDC Numeric Code	Waste Description	Constituent/Compound/Item	CAS	Potential Hazardous Constituent, Chemical Property, or Hazardous Item (for supporting safe storage configurations)[HI, WG] See Note 26	Initial Gen Assigned HWN [WG, PC] See Note 29	WIPP WSPF Approved HWN [WS, AK]
229	LBNL MIXED HETEROGENEOUS DEBRIS	See Notes 9 and 15 (142)	—	See Note 9 (142)	See Note 15 (142)	—

Table A-22. Lawrence Livermore/Los Alamos (LL/LA) hazardous constituents, chemical properties, or hazardous items identified in TRU waste.

LL/LA IDC Numeric Code	Waste Description	Constituent/Compound/Item	CAS	Potential Hazardous Constituent, Chemical Property, or Hazardous Item (for supporting safe storage configurations)[HI, WG] See Note 26	Initial Gen Assigned HWN [WG, PC] See Note 29	WIPP WSPF Approved HWN [WS, AK]
002	TA-50 RADIOACTIVE LIQUID WASTE TREATMENT FACILITY	See Notes 9 and 15 (127)	—	See Note 9 (127)	See Note 15 (127)	—
003	SOLIDIFIED INORGANICS	See Notes 9 and 15 (128)	—	See Note 9 (128)	See Note 15 (128)	—
005	LANL MIXED SALT WASTE	See Notes 9 and 15 (129)	—	See Note 9 (129)	See Note 15 (129)	—
006	CEMENTED TRU WASTE	See Notes 9 and 15 (130)	—	See Note 9 (130)	See Note 15 (130)	—

Table A-23. Lawrence Livermore (LL) hazardous constituents, chemical properties, or hazardous items identified in TRU waste.

LL IDC Numeric Code	Waste Description	Constituent/Compound/Item	CAS	Potential Hazardous Constituent, Chemical Property, or Hazardous Item (for supporting safe storage configurations)[HI, WG] See Note 26	Initial Gen Assigned HWN [WG, PC] See Note 29	WIPP WSPF Approved HWN [WS, AK]
212	LLNL SOLIDIFIED SLUDGE AND LIQUIDS	See Notes 9 and 15	—	See Note 9 (100)	See Note 15 (100)	—
213	HETEROGENEOUS DEBRIS	See Notes 9 and 15	—	See Note 9 (101)	See Note 15 (101)	—
221	LLNL PYROCHEMICAL SALT WASTE	See Notes 9and 15	—	See Note 9 (102)	See Note 15 (102)	—

Table A-24. Mound Laboratory (MD) hazardous constituents, chemical properties, or hazardous items identified in TRU waste.

MD IDC Numeric Code	Waste Description	Constituent/Compound/Item	CAS	Potential Hazardous Constituent, Chemical Property, or Hazardous Item (for supporting safe storage configurations)[HI, WG] See Note 26	Initial Gen Assigned HWN [WG, PC] See Note 29	WIPP WSPF Approved HWN [WS, AK]
801	RAGS, PAPER, WOOD, ETC. See Note 22	1,1-dichloroethylene	75-35-4	X [4, 5, 42]	See Notes 4, 8, and 25 (108, 182, 183)	See Note 22 D029 [42]
		1,1,1-trichloroethane (TCA)	71-55-6	X	—	F001/F002
		1,1,2-trichloro-1,2,2-trifluoroethane	76-13-1	X	—	F001/F002
		arsenic	7440-38-2	X	—	D004
		acetone	67-64-1	X	See Note 2	N/A
		asbestos	1332-21-4	X	N/A	N/A
		barium	7440-39-3	X	—	D005
		benzene	71-43-2	X	—	F005
		beryllium (not beryllium powder)	7440-41-7	X	N/A	N/A
		cadmium	7440-43-9	X	—	D006
		carbon disulfide	75-15-0	X	—	F005
		carbon tetrachloride	56-23-5	X	—	F001
		chloroform	67-66-3	X	—	D022
		chromium	7440-47-3	X	—	D007
		cyanide	57-12-5	X	See Note 2	N/A
		cyanide cleaning bath solutions	—	X	—	F009
		cyanide plating bath solutions	—	X	—	F007
		lead	7439-92-1	X	—	D008
		mercury	7439-97-6	X	—	D009
		methanol	67-56-1	X	See Note 2	N/A
		methyl ethyl ketone (2-butanone)	78-93-3	X	—	F005
		methylene chloride	75-09-2	X	—	F001/F002
		nitrates (may be present in the container)	—	X	See Note 2	N/A
		potential corrosives if liquids exceed the WIPP-WAC limit	—	X	See Note 2	N/A
		selenium	7782-49-2	X	—	D010
		silver	7440-22-4	X	—	D011
		tetrachloroethylene (perclene)	127-18-4	X	—	F002
		toluene	108-88-3	X	—	F005
		trichloroethylene (TCE)	79-01-6	X	—	F001/F002
		xylene	1330-20-7	X	See Note 2	N/A

Table A-24. (cont.) MD

MD IDC Numeric Code	Waste Description	Constituent/Compound/Item	CAS	Potential Hazardous Constituent, Chemical Property, or Hazardous Item (for supporting safe storage configurations)[HI, WG] See Note 26	Initial Gen Assigned HWN [WG, PC] See Note 29	WIPP WSPF Approved HWN [WS, AK]
802	DRY BOX GLOVES AND O-RINGS	See MD-801 [191]	—	See MD-801 [1, 4, 5 42, 191]	See MD-801 and Notes 4, 8, and 25 [108, 182, 183, 191]	See MD-801 [42] See Note 22
803	METAL, EQUIPMENT, PIPE, VALVES, ETC.	See MD-801 [191]	—	See MD-801 [42, 191]	See MD-801 and Notes 4, 8, and 25 [108, 182, 183, 191]	See MD-801 [42] See Note 22
804	PLASTIC, TYGON, MANI-BOOTS, ETC.	See MD-801 [191]	—	See MD-801 [42, 191]	See Notes 4, 8, and 25 [108, 182, 183, 191]	See MD-801 [42] See Note 22
805	ASBESTOS FILTERS	See MD-801 [191]	—	See MD-801 [1, 4, 5, 42, 191]	See Notes 4, 8, and 25 [108, 182, 183, 191]	See MD-801 [42] See Note 22
810	GLASS, FLASKS, SAMPLE VIALS, ETC	See MD-801 [191]	—	See MD-801 [1, 4, 5, 42, 191]	See Notes 4, 8, and 25 [108, 182, 183, 191]	See MD-801 [42] See Note 22
811	EVAPORATOR AND DISSOLVER SLUDGE	asbestos	1332-21-4	X [1, 4, 5]	—	—
		beryllium (not beryllium powder)	7440-41-7	X	—	—
		mercury	7439-97-6	X	D009	—
		nitrates (may be present in container)	—	X	—	—
812	SPENT ION EXCHANGE RESIN	See MD-801 [108, 191]	—	See MD-801 [4, 5, 108, 191]	See MD-801 [4, 5, 108, 191]	—
813	GLASS FILTERS AND FIBERGLASS	See MD-801 [191]	—	See MD-801 [1, 4, 5 42, 191]	See Notes 8 and 25 [108, 182, 183, 191]	See MD-801 [42] See Note 22
814	GRAPHITE WASTE	See MD-801 [191]	—	See MD-801 [1, 4, 5 42, 191]	See Notes 8 and 25 [108, 182, 183, 191]	See MD-801 [42] See Note 22
815	CLASSIFIED PARTS	See Note 19	—	See Note 19	—	—
824	EQUIPMENT BOXES NON-COMBUSTIBLE	See MD-801 [191]	See MD-801	See MD-801 [4, 5 191]	See MD-801 and Notes 8 and 25 [108, 182, 183, 191]	See Note 22
825	EQUIPMENT DRUMS NON-COMBUSTIBLE	See MD-801 [191]	—	See MD-801 [20, 42, 191]	See Notes 8 and 25 [108, 182, 183, 191]	See MD-801 [42] See Note 22
826	EQUIPMENT BOXES, COMBUSTIBLE (after 1980)	See MD-801 [191]	—	See MD-801 [191]	See MD-801 [191]	See Note 22
827	EQUIPMENT DRUMS, COMBUSTIBLE	See MD-801 [191]	—	See MD-801 [5, 42, 191]	See Notes 8 and 25 [108, 182, 183, 191]	See MD-801 [42] See Note 22
832	CONTAMINATED MERCURY	mercury	7439-97-6	X [1, 4, 5]	—	—
		beryllium (not beryllium powder)	7440-41-7	X	—	—

Table A-24. (cont.) MD

MD IDC Numeric Code	Waste Description	Constituent/Compound/Item	CAS	Potential Hazardous Constituent, Chemical Property, or Hazardous Item (for supporting safe storage configurations)[HI, WG] See Note 26	Initial Gen Assigned HWN[WG, PC] See Note 29	WIPP WSPF Approved HWN[WS, AK]
834	HIGH LEVEL ACID	nitrates	—	X[(1, 4, 5, 36)]	See Note 2	N/A[(36)]
		potential corrosives if liquids exceed the WIPP-WAC limit	—	X	D002	N/A
		1,1,1-trichloroethane (TCA)	71-55-6	X	—	F001/F002
		asbestos	1332-21-4	X	N/A	N/A
		acetone	67-64-1	X	See Note 2	N/A
		beryllium (not beryllium powder)	7440-41-7	X	—	—
		chromium	7440-47-3	X	—	D007
		lead	7439-92-1	X	—	D008
		mercury	7439-97-6	X	—	D009
		methanol	67-56-1	X	See Note 2	N/A
		carbon tetrachloride	56-23-5	X	—	F001
		trichloroethylene (TCE)	79-01-6	X	—	F001/F002
		xylene	1330-20-7	X	See Note 2	N/A
835	HIGH LEVEL CAUSTIC	potential corrosives if liquids exceed the WIPP-WAC limit	—	X[(1, 4, 5, 36)]	D002	N/A[(36)]
		1,1,1-trichloroethane (TCA)	71-55-6	X	—	F001/F002
		chromium	7440-47-3	X	—	D007
		asbestos	1332-21-4	X	N/A	N/A
		acetone	67-64-1	X	See Note 2	N/A
		beryllium (not beryllium powder)	7440-41-7	X	N/A	N/A
		lead	7439-92-1	X	—	D008
		mercury	7439-97-6	X	—	D009
		methanol	67-56-1	X	See Note 2	N/A
		nitrates	—	X	N/A	N/A
		carbon tetrachloride	56-23-5	X	—	F001
		trichloroethylene (TCE)	79-01-6	X	—	F001/F002
		xylene	1330-20-7	X	See Note 2	N/A
836	HIGH LEVEL SLUDGE/CEMENT	1,1,1-trichloroethane (TCA)	71-55-6	X[(5, 56)]	—	F002[(56)]
		acetone	67-64-1	X	See Note 2	N/A
		arsenic	7440-38-2	X	—	D004
		barium	7440-39-3	X	—	D005
		benzene	71-43-2	X	—	F005
		beryllium (not beryllium powder)	7440-41-7	X	N/A	N/A

Table A-24. (cont.) MD

MD IDC Numeric Code	Waste Description	Constituent/Compound/Item	CAS	Potential Hazardous Constituent, Chemical Property, or Hazardous Item (for supporting safe storage configurations)[HI, WG] See Note 26	Initial Gen Assigned HWN [WG, PC] See Note 29	WIPP WSPF Approved HWN [WS, AK]
836	HIGH LEVEL SLUDGE/CEMENT (cont.)	cadmium	7440-43-9	X	—	D006
		chromium	7440-47-3	X	—	D007
		lead	7439-92-1	X	—	D008
		mercury	7439-97-6	X	—	D009
		methanol	67-56-1	X	See Note 2	N/A
		potential corrosives if liquids exceed the WIPP-WAC limit	—	X	D002	N/A
		nitrates	—	X	N/A	N/A
		selenium	7782-49-2	X	—	D010
		silver	7440-22-4	X	—	D011
		tetrachloroethylene (perclene)	127-18-4	X	—	F001/F002
		toluene	108-88-3	X	—	F005
		trichloroethylene (TCE)	79-01-6	X	—	F001/F002
		xylene	1330-20-7	X	See Note 2	N/A
838	<10 NCI/G NON-COMBUSTIBLE	See MD-801 and Note 19 [191]	—	See MD-801 and Note 19 [191]	See Notes 8, 19 and 25 [108, 182, 183, 191]	See Note 22
842	CONTAMINATED SOIL	cadmium	7440-43-9	X [1, 4, 5]	—	—
		chromium	7440-47-3	X	—	—
		lead	7439-92-1	X	—	—
		mercury	7439-97-6	X	—	—
		potential corrosives if liquids exceed the WIPP-WAC limit	—	X	D002	—
		selenium	7782-49-2	X	—	—
		silver	7440-22-4	X	—	—
847	LSA <100 NCI/G COMBUSTIBLE	See MD-801 [191]	See MD-801	See MD-801 [20, 191]	See MD-801 and Notes 8 and 25 [108, 182, 183, 191]	See Note 22
848	LSA <100 NCI/G NON-COMBUSTIBLE	See MD-801 [191]	—	See MD-801 [20, 42, 191]	See Notes 8 and 25 [108, 182, 183, 191]	See MD-801 [42] See Note 22

Table A-25. Monsanto (MO) hazardous constituents, chemical properties, or hazardous items identified in TRU waste.

MO IDC Numeric Code	Waste Description	Constituent/Compound/Item	CAS	Potential Hazardous Constituent, Chemical Property, or Hazardous Item (for supporting safe storage configurations)[HI, WG] See Note 26	Initial Gen Assigned HWN [WG, PC] See Note 29	WIPP WSPF Approved HWN [WS, AK]
530	COMPACTED WASTE	none identified	—	X [(11)]	—	—
535	COMPACTED WASTE/LEAD	lead	7439-92-1	X [(11)]	—	—
540	NON-COMPACTED WASTE	lead	7439-92-1	X [(11)]	—	—
		2-methoxyethanol	109-86-4	X	—	—
		ether	60-29-7	X	—	—
		dichlorodifluorourethane	—	X	—	—
		polyphenylisocyanate	—	X	—	—
545	WEP SHIELDED WASTE	styrene	100-42-5	X [(11)]	—	—
550	SOLIDIFIED OIL	none identified	—	X [(11)]	—	—

Table A-26. Mexico (MX) hazardous constituents, chemical properties, or hazardous items identified in TRU waste.

MX IDC Numeric Code	Waste Description	Constituent/Compound/Item	CAS	Potential Hazardous Constituent, Chemical Property, or Hazardous Item (for supporting safe storage configurations)[HI, WG] See Note 26	Initial Gen Assigned HWN [WG, PC] See Note 29	WIPP WSPF Approved HWN [WS, AK]
142	SCRAP PROCESSING EQUIPMENT	lead	7439-92-1	X [(1,4 5, 6, 8, 9, 16, 24, 57)]	X [(16)]	—
		nitrates	—	X	—	—
		potential corrosives if liquids exceed the WIPP-WAC limit	—	X	D002	—
		barium	7440-39-3	X	—	—
		benzene	71-43-2	X	—	—
		beryllium (not beryllium powder)	7440-41-7	X	—	—
		cadmium	7440-43-9	X	D006	—
		carbon tetrachloride	56-23-5	X	F001	—
		chlorobenzene	108-90-7	X	—	—
		chloroform (trichloromethane)	67-66-3	X	—	—
		chromium	7440-47-3	X	—	—
		cyanide cleaning bath solutions	—	X	F009	—
		cyanide plating bath solutions	—	X	F007	—
		electroplating sludges	—	X	F006	—
		ethyl benzene	100-41-4	X	See Note 2	—

Table A-26. (cont.) MX

MX IDC Numeric Code	Waste Description	Constituent/Compound/Item	CAS	Potential Hazardous Constituent, Chemical Property, or Hazardous Item (for supporting safe storage configurations)[HI, WG] See Note 26	Initial Gen Assigned HWN [WG, PC] See Note 29	WIPP WSPF Approved HWN [WS, AK]
142	SCRAP PROCESSING EQUIPMENT (cont.)	ethyl ether	60-29-7	X	See Note 2	—
		lead	7439-92-1	X	D008	—
		mercury	7439-97-6	X	—	—
		methanol	67-56-1	X	F003 See Note 2	—
		methylene chloride	75-09-2	X	F002	—
		nitrate	—	X	—	—
		potential corrosives if liquids exceed the WIPP-WAC limit	—	X	D002	—
		selenium	7782-49-2	X	—	—
		silver	7440-22-4	X	—	—
		tetrachloroethylene (perclene)	127-18-4	X	F00	—
		toluene	108-88-3	X	—	—
		trichloroethylene (TCE)	79-01-6	X	F001	—
		xylene	1330-20-7	X	F003 See Note 2	—

Table A-27. Nuclear Radiation Development (ND) hazardous constituents, chemical properties, or hazardous items identified in TRU waste.

ND IDC Numeric Code	Waste Description	Constituent/Compound/Item	CAS	Potential Hazardous Constituent, Chemical Property, or Hazardous Item (for supporting safe storage configurations)[HI, WG] See Note 26	Initial Gen Assigned HWN [WG, PC] See Note 29	WIPP WSPF Approved HWN [WS, AK]
228	NRD MIXED HETEROGENEOUS DEBRIS	See Notes 9 and 15	—	See Note 9 [(143)]	See Note 15 [(143)]	—

Table A-28. Nevada Test Site (NT) hazardous constituents, chemical properties, or hazardous items identified in TRU waste.

NT IDC Numeric Code	Waste Description	Constituent/Compound/Item	CAS	Potential Hazardous Constituent Chemical Property, or Hazardous Item (for supporting safe storage configurations)[HI, WG] See Note 26	Initial Gen Assigned HWN [WG, PC] See Note 29	WIPP WSPF Approved HWN [WS, AK]
210	NTS BERKELEY SOLIDIFIED LIQUIDS	See Notes 9 and 15	—	See Note 9 [71, 90]	See Note 15 [71, 90]	—
211	NTS LAWRENCE BERKELEY HETEROGENEOUS DEBRIS	See Notes 9 and 15	—	See Note 9 [71, 90]	See Note 15 [71, 90]	—
212	NTS LAWRENCE LIVERMORE NATIONAL LABORATORY (LLNL) SOLIDIFIED SLUDGE AND LIQUIDS	See Notes 9 and 15	—	See Note 9 [70, 84]	See Note 15 [70, 84]	—
213	NTS LLNL HETEROGENEOUS DEBRIS	See Notes 9 and 15	—	See Note 9 [70, 84]	See Note 15 [70, 84]	—
214	NTS LYNCHBURG HETEROGENEOUS DEBRIS	See Notes 9 and 15	—	See Note 9 [77]	See Note 15 [87]	—
215	NTS EG&G HETEROGENEOUS DEBRIS)	See Notes 9 and 15	—	See Note 9 [78, 86]	See Note 15 [78, 86]	—
216	NTS ROLLER COASTER DEBRIS	See Notes 9 and 15	—	See Note 9 [79]	See Note 15 [79, 89]	—
217	NTS RF DECON DEBRIS	See Notes 9 and 15	—	See Note 9 [80]	See Note 15 [80, 88]	—
218	NTS LIVERMORE AND BERKELEY COMBINED DEBRIS	See Notes 9 and 15	—	See Note 9 [81, 85]	See Note 15 [81, 85]	—
219	NTS ITRI DEBRIS	See Notes 9 and 15	—	See Note 9 [81, 85]	See Note 15 [81, 85]	—
220	NTS DECON AND MAINTENANCE DEBRIS	See Notes 9 and 15	—	See Note 9 [83, 92]	See Note 15 [83, 92]	—

Table A-29. Oak Ridge National Laboratory (OR) hazardous constituents, chemical properties, or hazardous items identified in TRU waste.

OR IDC Numeric Code	Waste Description	Constituent/Compound/Item	CAS	Potential Hazardous Constituent, Chemical Property, or Hazardous Item (for supporting safe storage configurations)[HI, WG] See Note 26	Initial Gen Assigned HWN [WG, PC] See Note 29	WIPP WSPF Approved HWN [WS, AK]
250	OR-NFS-CH-SOIL	See Notes 9 and 15 [131]		See Note 9 [131]-	See Note 15 [131]	—

Table A-30. Rocky Flats Plant (RF) hazardous constituents, chemical properties, or hazardous items identified in TRU waste.

RF IDC Numeric Code	Waste Description	Constituent/Compound/Item	CAS	Potential Hazardous Constituent, Chemical Property, or Hazardous Item (for supporting safe storage configurations)[HI, WG] See Note 26	Initial Gen Assigned HWN [WG, PC] See Note 29	WIPP WSPF Approved HWN [WS, AK]
001	FIRST STAGE SLUDGE	1,1,1-trichloroethane (TCA)	71-55-6	X [1, 4, 5, 6, 8, 9, 16, 24, 57]	F001 [16]	F001/F002 [24, 57]
		1,1,2-trichloro-1,2,2-trifluoroethane	76-13-1	X	F002	F002 [24]
		1,1,2,2-trichloroethane	79-00-5	X	N/A	N/A
		1-butanol	71-36-3	X	See Note 2	N/A
		acetone	67-64-1	X	See Note 2	F003 See Notes 1 and 2
		arsenic	7440-38-2	X	—	D004
		barium	7440-39-3	X	—	D005
		benzene	71-43-2	X	—	F005
		beryllium (not beryllium powder)	7440-41-7	X	N/A	N/A
		cadmium	7440-43-9	X	D006	D006
		carbon tetrachloride	56-23-5	X	F001	F001
		chlorobenzene	108-90-7	X	—	F002
		chloroform (trichloromethane)	67-66-3	X	—	D022
		chromium	7440-47-3	X	—	D007
		cyanide cleaning bath solutions	—	X	F009	F009
		cyanide plating bath solutions	—	X	F007	F007
		electroplating sludges	—	X	F006	F006
		ethyl benzene	100-41-4	X	See Note 2	N/A
		ethyl ether	60-29-7	X	See Note 2	N/A
		lead	7439-92-1	X	D008	D008
		mercury	7439-97-6	X	—	D009
		methanol	67-56-1	X	F003 See Note 2	F003 See Notes 1 and 2
		methylene chloride	75-09-2	X	F002	F001/F002
		nitrate	—	X	See Note 2	N/A
		potential corrosives if liquids exceed the WIPP-WAC limit	—	X	D002	N/A
		selenium	7782-49-2	X	—	D010
		silver	7440-22-4	X	—	D011
		tetrachloroethylene (perclene)	127-18-4	X	F001	F001/F002
		toluene	108-88-3	X	—	F005
		trichloroethylene (TCE)	79-01-6	X	F001	F001/F002

Table A-30. (cont.) RF

RF IDC Numeric Code	Waste Description	Constituent/Compound/Item	CAS	Potential Hazardous Constituent, Chemical Property, or Hazardous Item (for supporting safe storage configurations)[HI, WG] See Note 26	Initial Gen Assigned HWN [WG, PC] See Note 29	WIPP WSPF Approved HWN [WS, AK]
001	FIRST STAGE SLUDGE (cont.)	xylene	1330-20-7	X	F003 See Note 2	F003 See Notes 1 and 2
002	SECOND STAGE SLUDGE	1,1,1-trichloroethane (TCA)	71-55-6	X [1, 4, 5, 6, 9, 16, 24, 57]	F001 [16]	F001/F002 [24, 57]
		1,1,2-trichloro-1,2,2-trifluoroethane	76-13-1	X	F002	F002
		1,1,2,2-trichloroethane	79-00-5	X	N/A	N/A
		1-butanol	71-36-3	X	F003 See Note 2	N/A
		acetone	67-64-1	X	See Note 2	F003 See Notes 1 and 2
		arsenic	7440-38-2	X	—	D004
		barium	7440-39-3	X	—	D005
		benzene	71-43-2	X	—	F005
		beryllium (not beryllium powder)	7440-41-7	X	N/A	N/A
		cadmium	7440-43-9	X	D006	D006
		carbon tetrachloride	56-23-5	X	F001	F001
		chlorobenzene	108-90-7	X	—	F002
		chloroform (trichloromethane)	67-66-3	X	—	D022
		chromium	7440-47-3	X	—	D007
		cyanide cleaning bath solutions	—	X	F009	F009
		cyanide plating bath solutions	—	X	F00	F007
		electroplating sludges	—	X	F006	F006
		ethyl benzene	100-41-4	X	See Note 2	N/A
		ethyl ether	60-29-7	X	See Note 2	N/A
		lead	7439-92-1	X	D008	D008
		lithium (discharged batteries)	7439-93-2	X	See Note 2	N/A
		mercury	7439-97-6	X	D009	D009
		methanol	67-56-1	X	F003 See Note 2	F003 See Notes 1 and 2
		methylene chloride	75-09-2	X	F002	F001/F002
		nitrate	—	X	See Note 2	N/A
		potential corrosives if liquids exceed the WIPP-WAC limit	—	X	D002	N/A
		selenium	7782-49-2	X	—	D010
		silver	7440-22-4	X	—	D011
		tetrachloroethylene (perclene)	127-18-4	X	F001	F001/F002

Table A-30. (cont.) RF

RF IDC Numeric Code	Waste Description	Constituent/Compound/Item	CAS	Potential Hazardous Constituent, Chemical Property, or Hazardous Item (for supporting safe storage configurations)[HI, WG] See Note 26	Initial Gen Assigned HWN [WG, PC] See Note 29	WIPP WSPF Approved HWN [WS, AK]
002	SECOND STAGE SLUDGE (cont.)	toluene	108-88-3	X	—	F005
		trichloroethylene (TCE)	79-01-6	X	F001	F001/F002
		xylene	1330-20-7	X	F003 See Note 2	F003 See Notes 1 and 2
003	ORGANIC SETUPS, OIL SOLIDS	1,1,1-trichloroethane (TCA)	71-55-6	X [1, 4, 5, 6, 8, 16, 46]	F001 [16]	F001/F002 [46]
		1,1,2-trichloro-1,2,2-trifluoroethane	76-13-1	X	F002	F002
		1,1-dichloroethylene	75-35-4	X	D029	D029
		1,2-dichlorobenzene	95-50-1	X	—	F002
		1,2-dichloroethane	107-06-2	X	D028	D028
		1,4-dichlorobenzene	106-46-7	X	—	D027
		2-ethoxyethanol	110-80-5	X	—	F005
		2,4-dinitrotoluene	121-14-2	X	—	D030
		acetone	67-64-1	X	See Note 2	N/A
		benzene	71-43-2	X	—	F005
		beryllium (not beryllium powder)	7440-41-7	X	N/A	N/A
		butanol	71-36-3	X	See Note 2	N/A
		carbon disulfide	75-15-0	X	—	F005
		carbon tetrachloride	56-23-5	X	F001	F001
		chloroform (trichloromethane)	67-66-3	X	D022	D022
		cresol	1319-77-3	X	—	D026
		ethyl benzene	100-41-4	X	See Note 2	N/A
		hexachlorobenzene	118-74-1	X	—	D032
		hexachloroethane	67-72-1	X	D034	D034
		methanol	67-56-1	X	F003 See Note 2	N/A
		methyl ethyl ketone (2-butanone)	78-93-3	X	—	F005
		methylene chloride	75-09-2	X	F002	F002
		nitrobenzene	98-95-3	X	—	D036
		nitrates	—	X	See Note 2	N/A
		pentachlorophenol	87-86-5	X	—	D037
		polychlorinated-biphenyls (PCBs)	1336-36-3	PCB	N/A	N/A
		pyridine	110-86-1	X	—	F005 [46]
		tetrachloroethylene (perclene)	127-18-4	X	F001	F002
		trichlorofluoromethane	75-69-4	X	—	F001/F002
		toluene	108-88-3	X	—	F005

Table A-30. (cont.) RF

RF IDC Numeric Code	Waste Description	Constituent/Compound/Item	CAS	Potential Hazardous Constituent, Chemical Property, or Hazardous Item (for supporting safe storage configurations)[HI, WG] See Note 26	Initial Gen Assigned HWN [WG, PC] See Note 29	WIPP WSPF Approved HWN [WS, AK]
003	ORGANIC SETUPS, OIL SOLIDS (cont.)	trichloroethylene (TCE)	79-01-6	X	F001	F002
		xylene	1330-20-7	X	F003 See Note 2	N/A
004	SPECIAL SETUPS	1,1,1-trichloroethane (TCA)	71-55-6	X[1, 5, 6, 16, 45]	F001[16]	F001/F002[45]
		1,1,2-trichloro-1,2,2-trifluoroethane	76-13-1	X	F002	F001/F002
		1,1-dichloroethylene	75-35-4	X	—	D029
		1-butanol	71-36-3	X	See Note 2	N/A
		acetone	67-64-1	X	See Note 2	N/A
		benzene	71-43-2	X	—	F005
		cadmium	7440-43-9	X	—	D006
		carbon tetrachloride	56-23-5	X	F001	F001
		chromium	7440-47-3	X	—	D007
		cyanide	57-12-5	X	See Note 2	N/A
		ethyl benzene	100-41-4	X	F003See Note 2	N/A
		ethyl ether	60-29-7	X	See Note 2	N/A
		lead	7439-92-1	X	D008	D008
		methanol	67-56-1	X	F003 See Note 2	N/A
		methylene chloride	75-09-2	X	—	F002
		methyl ethyl ketone (2-butanone)	78-93-3	X	—	F005
		nitrates	—	X	—	—
		silver	7440-22-4	X	—	D011
		toluene	108-88-3	X	—	F005
		tetrachloroethylene (perclene)	127-18-4	X	—	F001/F002
		trichloroethylene (TCE)	79-01-6	X	F001	F001/F002
		xylene	1330-20-7	X	F003 See Note 2	N/A
		electroplating sludges	—	X	—	F006
		cyanide plating bath solutions	—	X	—	F007
		cyanide cleaning bath solutions	—	X	—	F009
005	EVAPORATOR SALTS	nitrates	—	X[1, 4, 5]	—	—
		possible ignitable if deemed an oxidizer	—	X	—	—

Table A-30. (cont.) RF

RF IDC Numeric Code	Waste Description	Constituent/Compound/Item	CAS	Potential Hazardous Constituent, Chemical Property, or Hazardous Item (for supporting safe storage configurations)[HI, WG] See Note 26	Initial Gen Assigned HWN[WG, PC] See Note 29	WIPP WSPF Approved HWN[WS, AK]
007	BUILDING 374 DRY SLUDGE	1,1,1-trichloroethane (TCA)	71-55-6	X[(1, 5, 6, 8, 16, 25)]	F001[(16)]	F001[(25)]
		1,1,2,2-tetrachloroethane	79-34-5	X	N/A	N/A
		1,1,2-trichloro-1,2,2-trifluoroethane	76-13-1	X	F002	F001
		1,2-dichloroethylene	540-59-0	X	N/A	N/A
		1-butanol	71-36-3	X	See Note 2	N/A
		acetone	67-64-1	X	See Note 2	N/A
		benzene	71-43-2	X	—	F005[(25)]
		beryllium (not beryllium powder)	7440-41-7	X	N/A	N/A
		1-butanol	71-36-3	X	See Note 2	N/A
		cadmium	7440-43-9	X	D006	D006
		carbon tetrachloride	56-23-5	X	F001	F001
		chromium	7440-47-3	X	—	D007
		electroplating sludges	—	X	F006	F006
		cyanide plating bath solutions	—	X	F007	F007
		cyanide cleaning bath solutions	—	X	F009	F009
		ethyl benzene	100-41-4	X	See Note 2	N/A
		hexachlorobenzene	118-74-1	X	—	D032
		hexane	110-54-3	X	See Note 2	N/A
		lead	7439-92-1	X	D008	D008
		mercury	7439-97-6	X	—	D009
		methanol	67-56-1	X	See Note 2	N/A
		methyl ethyl ketone (2-butanone)	78-93-3	X	—	F005
		methyl isobutyl ketone	108-10-1	X	See Note 2	N/A
		methylene chloride	75-09-2	X	F002	F002
		potential corrosives if liquids exceed the WIPP-WAC limit	—	X	D002	N/A
		selenium	7782-49-2	X	—	D010
		silver	7440-22-4	X	—	D011
		styrene	100-42-5	X	See Note 2	N/A
		tetrachloroethylene (perclene)	127-18-4	X	F001	F001
		toluene	108-88-3	X	—	F005
		trichloroethylene (TCE)	79-01-6	X	F001	F001/F002
		xylene	1330-20-7	X	See Note 2	N/A

Table A-30. (cont.) RF

RF IDC Numeric Code	Waste Description	Constituent/Compound/Item	CAS	Potential Hazardous Constituent, Chemical Property, or Hazardous Item (for supporting safe storage configurations)[HI, WG] See Note 26	Initial Gen Assigned HWN [WG, PC] See Note 29	WIPP WSPF Approved HWN [WS, AK]
010	PAPER & RAGS (Pre-1971)	See RF-336	—	See RF-336	See RF-336 See Notes 4, 8, 25 (108, 182, 183)	See Note 22
020	WOOD & BENELEX (Pre-1971)	See RF-970	—	See RF-970	See RF-970 See Notes 4, 8, and 25 (108, 182, 183)	See Note 22
030	PLASTIC (Pre-1971)	See RF-337	—	See RF-337	See RF-337 See Notes 4, 8, and 25 (108, 182, 183)	See Note 22
040	RUBBER (Pre-1971)	See RF-463	—	See RF-463	See RF-463 See Notes 4, 8, and 25 (108, 182, 183)	See Note 22
050	METAL SCRAP (Pre-1971)	See RF-480	—	See RF-480	See RF-480 See Notes 4, 8, and 25 (108, 182, 183)	See Note 22
060	GLASS (Pre-1971)	See RF-440	—	See RF-440	See RF-440 See Notes 4, 8, and 25 (108, 182, 183)	See Note 22
070	GRAPHITE (Pre-1971)	See RF-300	—	See RF-300	See RF-300 See Notes 4, 8, and 25 (108, 182, 183)	See Note 22
080	EQUIPMENT (Pre-1971)	See RF-980	—	See RF-980	See RF-980 See Notes 4, 8, and 25 (108, 182, 183)	—
090	DIRT	1,1,1-trichloroethane (TCA)	71-55-6	X[1, 5]	—	—
		1,1,2-trichloro-1,2,2-trifluoroethane	76-13-1	X	—	—
		1-butanol	71-36-3	X	—	—
		carbon tetrachloride	56-23-5	X	—	—
		methanol	67-56-1	X	—	—
		methylene chloride	75-09-2	X	—	—
		nitrates	—	X	—	—
		nitrobenzene	98-95-3	X	—	—
		tetrachloroethylene (perclene)	127-18-4	X	—	—
		trichloroethylene (TCE)	79-01-6	X	—	—
		xylene	1330-20-7	X	—	—

Table A-30. (cont.) RF

RF IDC Numeric Code	Waste Description	Constituent/Compound/Item	CAS	Potential Hazardous Constituent, Chemical Property, or Hazardous Item (for supporting safe storage configurations)[HI, WG] See Note 26	Initial Gen Assigned HWN [WG, PC] See Note 29	WIPP WSPF Approved HWN [WS, AK]
095	SEWER SLUDGE	See RF-995	See RF-995	See RF-995	See RF-995	—
241	AMERICIUM PROCESS RESIDUE	lead	7439-92-1	X[(1, 4, 5, 16)]	D008[(5, 16, 108, 182, 183)] See Notes 8 and 25	See Note 22
		methylene chloride	75-09-2	X	F002	
		nitrates	—	X	—	
		potential corrosives if liquids exceed the WIPP-WAC limit	—	X	D002	
		potential ignitable if deemed a DOT oxidizer	—	X	See Notes 2 and 3	
		xylene	1330-20-7	X[(1, 5)]	F003[(5)] See Note 2	
290	FILTER SLUDGE	See RF-292		See RF-292	See RF-292	—
292	CEMENTED SLUDGE	1,1,1-trichloroethane (TCA)	71-55-6	X[(1, 5, 6, 8, 16, 26, 95)]	—	F001/F002[(26, 95)]
		1,1,2-trichloro-1,2,2-trifluoroethane	76-13-1	X	—	F001/F002
		1-butanol	71-36-3	X	See Note 2	N/A
		acetone	67-64-1	X	See Note 2	N/A See Notes 1 and 2
		arsenic	7440-38-2	X	—	D004
		barium	7440-39-3	X	—	D005
		benzene	71-43-2	X	—	F005
		beryllium (not beryllium powder)	7440-41-7	X	—	N/A
		cadmium	7440-43-9	X	—	D006
		carbon disulfide	75-15-0	X	—	F005
		carbon tetrachloride	56-23-5	X	—	F001
		chloroform (trichloromethane)	67-66-3	X	—	D022
		chromium	7440-47-3	X	—	D007
		cyanide cleaning bath solutions	—	X	See Note 11	F009
		cyanide plating bath solutions	—	X	See Note 11	F007
		electroplating sludges	—	X	See Note 11	F006
		lead	7439-92-1	X	—	D008
		mercury	7439-97-6	X	—	D009
		methanol	67-56-1	X	See Note 2	N/A See Notes 1 and 2
		methylene chloride	75-09-2	X	—	F002
		methyl ethyl ketone (2-butanone)	78-93-3	X	—	F005

Table A-30. (cont.) RF

RF IDC Numeric Code	Waste Description	Constituent/Compound/Item	CAS	Potential Hazardous Constituent, Chemical Property, or Hazardous Item (for supporting safe storage configurations)[HI, WG] See Note 26	Initial Gen Assigned HWN [WG, PC] See Note 29	WIPP WSPF Approved HWN [WS, AK]
292	CEMENTED SLUDGE (cont.)	potential corrosives if liquids exceed the WIPP-WAC limit	—	X	D002	N/A
		selenium	7782-49-2	X	—	D010
		silver	7440-22-4	X	—	D011
		tetrachloroethylene (perclene)	127-18-4	X	—	F001/F002
		toluene	108-88-3	X	—	F005
		trichloroethylene (TCE)	79-01-6	X	—	F001/F002
		xylene	1330-20-7	X	See Note 2	N/A See Notes 1 and 2
300	GRAPHITE MOLDS See Notes 7 and 22	1,1,1-trichloroethane (TCA)	71-55-6	X [5, 6, 8, 16, 22, 49, 64]	See Notes 4, 8, and 25 [108, 182, 183]	F001/F002 [22, 49, 64]
		1,1-dichloroethylene	75-35-4	X	—	D029
		1,2-dichloroethylene	540-59-0	X	See Note 2	N/A
		1,1,2-trichloro-1,2,2-trifluoroethane	76-13-1	X	—	F002
		methylene chloride	75-09-2	X	—	F002
		carbon tetrachloride	56-23-5	X	—	F001
		ethyl benzene	100-41-4	X	See Note 2	N/A
		lead	7439-92-1	X	—	D008
		methanol	67-56-1	X	See Note 2	N/A
		nitrates	—	X	—	—
		toluene	108-88-3	X	—	F005
		trichloroethylene (TCE)	79-01-6	X	—	F002
		xylene	1330-20-7	X	See Note 2	N/A
301	GRAPHITE CORES See Note 22	1,1,1-trichloroethane (TCA)	71-55-6	X [5, 6, 16, 22, 49, 64]	See Notes 4, 8, and 25 [108, 182, 183]	F001/F002 [22, 49, 64]
		1,1-dichloroethylene	75-35-4	X	—	D029
		methylene chloride	75-09-2	X	—	F002
		carbon tetrachloride	56-23-5	X	—	F001
		lead	7439-92-1	X	—	D008
		toluene	108-88-3	X	—	F005
		trichloroethylene (TCE)	79-01-6	X	—	F002
		1,1,2-trichloro-1,2,2-trifluoroethane	76-13-1	X	—	F002
		1,1,1-trichloroethane (TCA)	71-55-6	X [5, 6, 8, 16]	F001 [5, 16, 108, 182, 183] See Notes 4, 8, and 25	See Note 22

Table A-30. (cont.) RF

RF IDC Numeric Code	Waste Description	Constituent/Compound/Item	CAS	Potential Hazardous Constituent, Chemical Property, or Hazardous Item (for supporting safe storage configurations)[HI, WG] See Note 26	Initial Gen Assigned HWN [WG, PC] See Note 29	WIPP WSPF Approved HWN [WS, AK]
301	GRAPHITE CORES (cont.) See Note 22	barium	7440-39-3	X	D005	—
		carbon tetrachloride	56-23-5	X	F001	—
		isopropanol	67-63-0	X	—	—
		lead	7439-92-1	X	D008	—
		toluene	108-88-3	X[5, 6, 8, 16, 64]	X[5]	X[22, 49, 64]
		trichloroethylene (TCE)	79-01-6	X	F001	—
302	BENELEX AND PLEXIGLAS	1,1,1-trichloroethane (TCA)	71-55-6	X	—	F002
		1,1-dichloroethylene	75-35-4	X	—	D029
		methylene chloride	75-09-2	X	—	F002
		carbon tetrachloride	56-23-5	X	—	F001
		lead	7439-92-1	X	—	D008
		toluene	108-88-3	X	—	F005
		trichloroethylene (TCE)	79-01-6	X	—	F002
		1,1,2-trichloro-1,2,2-trifluoroethane	76-13-1	X	—	F002
303	SCARFED GRAPHITE CHUNKS See Note 22	1,1,1-trichloroethane (TCA)	71-55-6	X[49, 64]	See Notes 4, 8, and 25 [108, 182, 183]	F001/F002[49, 64]
		1,1-dichloroethylene	75-35-4	X	—	D029
		methylene chloride	75-09-2	X	—	F002[49]
		carbon tetrachloride	56-23-5	X	—	F001
		lead	7439-92-1	X	—	D008
		toluene	108-88-3	X	—	F005
		trichloroethylene (TCE)	79-01-6	X	—	F002
310	GRAPHITE SCARFINGS See Note 22	1,1,2-trichloro-1,2,2-trifluoroethane	76-13-1	X	—	F002
		1,1,1-trichloroethane (TCA)	71-55-6	X[16, 49, 64]	See Notes 4, 8, and 25 [108, 182, 183]	F001/F002[49, 64]
		1,1-dichloroethylene	75-35-4	X	—	D029
		methylene chloride	75-09-2	X	—	F002
		carbon tetrachloride	56-23-5	X	—	F001
		lead	7439-92-1	X	—	D008
		toluene	108-88-3	X	—	F005
		trichloroethylene (TCE)	79-01-6	X	—	F002
		1,1,2-trichloro-1,2,2-trifluoroethane	76-13-1	X	—	F002
311	GRAPHITE HEELS	nitrates	—	X[1]	—	—

Table A-30. (cont.) RF

RF IDC Numeric Code	Waste Description	Constituent/Compound/Item	CAS	Potential Hazardous Constituent, Chemical Property, or Hazardous Item (for supporting safe storage configurations)[HI, WG] See Note 26	Initial Gen Assigned HWN [WG, PC] See Note 29	WIPP WSPF Approved HWN [WS, AK]
312	COARSE GRAPHITE See Note 22	1,1,1-trichloroethane (TCA)	71-55-6	X [5, 6, 16]	See Notes 4, 8, and 25 (108, 182, 183)	F001/F002 [22, 49, 64]
		1,1-dichloroethylene	75-35-4	X	—	D029
		carbon tetrachloride	56-23-5	X	—	F001
		lead	7439-92-1	X	—	D008
		methylene chloride	75-09-2	X	—	F002
		toluene	108-88-3	X [5, 16]	—	F005
		trichloroethylene (TCE)	79-01-6	X	—	F002
		1,1,2-trichloro-1,2,2-trifluoroethane	76-13-1	X	—	F002
		xylene	1330-20-7	X	See Note 2	N/A
320	HEAVY NON-SPECIAL SOURCE METAL See Note 22	1,1-dichloroethylene	75-35-4	X [1, 2, 5, 6, 8, 16, 39]	X [5]	D029 [39]
		1,1,1-trichloroethane (TCA)	71-55-6	X	F001	F001/F002
		1,1,2-trichloro-1,2,2-trifluoroethane	76-13-1	X	F001	F001/F002
		1,2-dichloroethane	107-06-2	X	—	D028
		acetone	67-64-1	X	See Note 2	N/A
		arsenic	7440-38-2	X	—	D004
		barium	7440-39-3	X	—	D005
		benzene	71-43-2	X	—	F005
		cadmium	7440-43-9	X	—	D006
		carbon disulfide	75-15-0	X	—	F005
		carbon tetrachloride	56-23-5	X	F001	F001
		chloroform (trichloromethane)	67-66-3	X	D022	D022
		chromium	7440-47-3	X	—	D007
		cyanide cleaning bath solutions	—	X	—	F009
		cyanide plating bath solutions	—	X	—	F007
		electroplating sludges	—	X	—	F006
		lead	7439-92-1	X	D008	D008
		mercury	7439-97-6	X	—	D009
		methanol	67-56-1	X	See Notes 2, 4, 8, and 25 (108, 182, 183)	N/A
		methyl ethyl ketone (2-butanone)	78-93-3	X	—	F005
		methylene chloride	75-09-2	X	F002	F002
		selenium	7782-49-2	X	—	D010
		silver	7440-22-4	X	—	D011

Table A-30. (cont.) RF

RF IDC Numeric Code	Waste Description	Constituent/Compound/Item	CAS	Potential Hazardous Constituent, Chemical Property, or Hazardous Item (for supporting safe storage configurations)[HI, WG] See Note 26	Initial Gen Assigned HWN [WG, PC] See Note 29	WIPP WSPF Approved HWN [WS, AK]
320	HEAVY NON-SPECIAL SOURCE METAL (cont.) See Note 22	tetrachloroethylene (perclene)	127-18-4	X	F001	F001/F002
		toluene	108-88-3	X	F005	F005
		trichloroethylene (TCE)	79-01-6	X	—	F001/F002
		xylene	1330-20-7	X	See Note 2	N/A
321	LEAD See Note 22	1,1-dichloroethylene	75-35-4	X[(2, 8, 16, 39)]	—	D029[(39)]
		1,1,1-trichloroethane (TCA)	71-55-6	X	—	F001/F002
		1,1,2-trichloro-1,2,2-trifluoroethane	76-13-1	X	—	F001/F002
		1,2-dichloroethane	107-06-2	X	—	D028
		acetone	67-64-1	X	See Note 2	N/A
		arsenic	7440-38-2	X	—	D004
		barium	7440-39-3	X	—	D005
		benzene	71-43-2	X	—	F005
		beryllium (not beryllium powder)	7440-41-7	X	N/A	N/A
		cadmium	7440-43-9	X	—	D006
		carbon disulfide	75-15-0	X	—	F005
		carbon tetrachloride	56-23-5	X	—	F001
		chloroform (trichloromethane)	67-66-3	X	—	D022
		chromium	7440-47-3	X	—	D007
		cyanide cleaning bath solutions	—	X	—	F009
		cyanide plating bath solutions	—	X	—	F007
		electroplating sludges	—	X	—	F006
		lead	7439-92-1	X	D008[(2, 8, 16)]	D008
		mercury	7439-97-6	—	—	D009
		methanol	67-56-1	X	See Note 2	N/A
		methyl ethyl ketone (2-butanone)	78-93-3	X	—	F005
		methylene chloride	75-09-2	X	—	F002
		potential corrosives if liquids exceed the WIPP-WAC limit	—	X	D002	N/A
		selenium	7782-49-2	X	—	D010
		silver	7440-22-4	X	—	D011
		tetrachloroethylene (perclene)	127-18-4	X	—	F001/F002
		toluene	108-88-3	X	—	F005
		trichloroethylene (TCE)	79-01-6	X	—	F001/F002
		xylene	1330-20-7	X	See Note 2	N/A

Table A-30. (cont.) RF

RF IDC Numeric Code	Waste Description	Constituent/Compound/Item	CAS	Potential Hazardous Constituent, Chemical Property, or Hazardous Item (for supporting safe storage configurations)[HI, WG] See Note 26	Initial Gen Assigned HWN [WG, PC] See Note 29	WIPP WSPF Approved HWN [WS, AK]
328	FUL-FLO INCINERATOR FILTERS See Note 22	1,1-dichloroethylene	75-35-4	X [1, 5, 6, 16, 38]	See Notes 4, 8, and 25 (108, 182, 183)	D029 [38]
		1,1,1-trichloroethane (TCA)	71-55-6	X	—	F001/F002
		1,1,2-trichloro-1,2,2-trifluoroethane	76-13-1	X	—	F001/F002
		1,2-dichloroethane	107-06-2	X	—	D028
		1-butanol	71-36-3	X	See Note 2	N/A
		arsenic	7440-38-2	X	—	D004
		asbestos	1332-21-4	X	N/A	N/A
		barium	7440-39-3	X	—	D005
		benzene	71-43-2	X	—	F005
		cadmium	7440-43-9	X	—	D006
		carbon disulfide	75-15-0	X	—	F005
		carbon tetrachloride	56-23-5	X	—	F001
		chloroform (trichloromethane)	67-66-3	X	—	D022
		chromium	7440-47-3	X	—	D007
		cyanide	57-12-5	X	See Note 2	N/A
		cyanide cleaning bath solutions	—	See Note 6	—	See Note 6
		cyanide plating bath solutions	—	See Note 6	—	See Note 6
		electroplating sludges	—	See Note 6	—	See Note 6
		ethyl benzene	100-41-4	X	See Note 2	N/A
		lead	7439-92-1	X	—	D008
		mercury	7439-97-6	X	—	D009
		methanol	67-56-1	X	See Note 2	N/A
		methyl ethyl ketone (2-butanone)	78-93-3	X	—	F005
		methylene chloride	75-09-2	X	—	F002
		nitrates	—	X	N/A	N/A
		potential corrosives if liquids exceed the WIPP-WAC limit	—	X	D002	N/A
		selenium	7782-49-2	X	—	D010
		silver	7440-22-4	X	—	D011
		tetrachloroethylene (perclene)	127-18-4	X	—	F001/F002
		toluene	108-88-3	X	—	F005
		trichloroethylene (TCE)	79-01-6	X	—	F001/F002
		xylene	1330-20-7	X	See Note 2	N/A

Table A-30. (cont.) RF

RF IDC Numeric Code	Waste Description	Constituent/Compound/Item	CAS	Potential Hazardous Constituent, Chemical Property, or Hazardous Item (for supporting safe storage configurations)[HI, WG] See Note 26	Initial Gen Assigned HWN[WG, PC] See Note 29	WIPP WSPF Approved HWN[WS, AK]
330	PAPER AND RAGS – DRY See Note 22	1,1,1-trichloroethane (TCA)	71-55-6	X[(1, 5, 6, 8, 16)]	F001[(16, 28, 108, 182, 183)] See Notes 4, 8, and 25	F001/F002[(28, 50)]
		1,1,2-trichloro-1,2,2-trifluoroethane	76-13-1	X	F002	F001/F002
		1,2-dichloroethane	107-06-2	X	—	D028
		1,1-dichloroethylene	75-35-4	X	—	D029
		1,2-dichloropropane	78-87-5	X	See Note 2	N/A
		1-butanol	71-36-3	X	See Note 2	N/A
		2-ethoxyethanol	110-80-5	X	—	F005
		acetone	67-64-1	X	F003 See Note 2	N/A
		arsenic	7440-38-2	X	—	D004
		barium	7440-39-3	X	—	D005
		benzene	71-43-2	X	—	F005
		beryllium (not beryllium powder)	7440-41-7	X	N/A	N/A
		cadmium	7440-43-9	X	—	D006
		carbon disulfide	75-15-0	X	—	F005
		carbon tetrachloride	56-23-5	X	F001	F001
		chlorobenzene	108-90-7	X	—	F002
		chloroform (trichloromethane)	67-66-3	X	—	D022
		chromium	7440-47-3	X	—	D007
		cyanide cleaning bath solutions	—	X	—	F009
		cyanide plating bath solutions	—	X	—	F007
		cyclohexane	110-82-7	X	See Note 2	N/A
		electroplating sludges	—	X	—	F006
		ethyl benzene	100-41-4	X	See Note 2	N/A
		isobutanol	78-83-1	X	—	F005
		lead	7439-92-1	X	—	D008
		methanol	67-56-1	X[(1, 5, 6, 8, 16, 50, 67)]	F003[(16, 28)] See Note 2	N/A[(28, 50)]
		methylene chloride	75-09-2		F002	F002
		mercury	7439-97-6	X	—	D009
		methyl ethyl ketone (2-butanone)	78-93-3	X	—	F005
		nitrates	—	X	N/A	N/A
		pyridine	110-86-1	X	—	F005
		polychlorinated-biphenyls (ballast found in LLW box)	1336-36-3	PCB	N/A	N/A

Table A-30. (cont.) RF

RF IDC Numeric Code	Waste Description	Constituent/Compound/Item	CAS	Potential Hazardous Constituent, Chemical Property, or Hazardous Item (for supporting safe storage configurations)[HI, WG] See Note 26	Initial Gen Assigned HWN[WG, PC] See Note 29	WIPP WSPF Approved HWN[WS, AK]
330	PAPER AND RAGS - DRY See Note 22 (cont.)	selenium	7782-49-2	X	—	D010
		silver	7440-22-4	X	—	D011
		tetrachloroethylene (perclene)	127-18-4	X	—	F001/F002
		toluene	108-88-3	X	—	F005
		trichloroethylene (TCE)	79-01-6	X	F001	F001/F002
		xylene	1330-20-7	X	F003 See Note 2	N/A
335	ABSOLUTE 8×8 FILTERS See Note 22	1,1-dichloroethylene	75-35-4	X[1, 2, 5, 8, 16, 31, 38]	X[16, 108, 182, 183] See Notes 4, 8, and 25	D029[31, 38]
		1,1,1-trichloroethane (TCA)	71-55-6	X	F001	F001/F002
		1,1,2-trichloro-1,2,2-trifluoroethane	76-13-1	X	F002	F001/F002
		1,2-dichloroethane	107-06-2	X	—	D028
		1-butanol	71-36-3	X	See Note 2	N/A
		acetone	67-64-1	X	See Note 2	N/A
		arsenic	7440-38-2	X	—	D004
		asbestos	1332-21-4	X	N/A	N/A
		barium	7440-39-3	X	D005	D005
		benzene	71-43-2	X	—	F005
		cadmium	7440-43-9	X	—	D006
		carbon disulfide	75-15-0	X	—	F005
		carbon tetrachloride	56-23-5	X	F001	F001
		chloroform (trichloromethane)	67-66-3	X	D022	D022
		chromium	7440-47-3	X	D007	D007
		cyanide	57-12-5	X	See Note 2	N/A
		cyanide cleaning bath solutions	—	X	F009	F009
		cyanide plating bath solutions	—	X	F007	F007
		electroplating sludges	—	X	F006	F006
		ethyl benzene	100-41-4	X	See Note 2	N/A
		lead	7439-92-1	X	—	D008
		mercury	7439-97-6	X	D009	D009
		methanol	67-56-1	X	See Note 2	—
		methyl ethyl ketone (2-butanone)	78-93-3	X	—	F005
		methylene chloride	75-09-2	X	F002	F002
		nitrates (only for waste generated in building 374 after 1984)	—	X	See Note 2	N/A

Table A-30. (cont.) RF

RF IDC Numeric Code	Waste Description	Constituent/Compound/Item	CAS	Potential Hazardous Constituent, Chemical Property, or Hazardous Item (for supporting safe storage configurations)[HI, WG] See Note 26	Initial Gen Assigned HWN[WG, PC] See Note 29	WIPP WSPF Approved HWN[WS, AK]
335	ABSOLUTE 8×8 FILTERS See Note 22 (cont.)	potential corrosive if liquids exceed the WIPP-WAC limit	—	X	D002	N/A
		selenium	7782-49-2	X	—	D010
		silver	7440-22-4	X	D011	D011
		tetrachloroethylene (perclene)	127-18-4	X	—	F001/F002
		toluene	108-88-3	X	—	F005
		trichloroethylene (TCE)	79-01-6	X	—	F001/F002
		xylene	1330-20-7	X	See Note 2	N/A
336	PAPER AND RAGS MOIST See Note 22	1,1,1-trichloroethane (TCA)	71-55-6	X[(1, 4, 5, 6, 8, 16, 28, 50)]	F001[(16, 108, 182, 183)] See Notes 4, 8, and 25	F001/F002[(28, 50)]
		1,1,2-trichloro-1,2,2-trifluoroethane	76-13-1	X	F002	F001/F002
		1,2-dichloroethane	107-06-2	X	—	D028
		1,1-dichloroethylene	75-35-4	X	—	D029
		1,2-dichloropropane	78-87-5	X	See Note 2	N/A
		2-ethoxyethanol	110-80-5	X	—	F005
		acetone	67-64-1	X	F003 See Note 2	N/A
		arsenic	7440-38-2	X	—	D004
		barium	7440-39-3	X	—	D005
		benzene	71-43-2	X	—	F005
		cadmium	7440-43-9	X	D006	D006
		carbon disulfide	75-15-0	X	—	F005
		carbon tetrachloride	56-23-5	X	F001	F001
		chlorobenzene	108-90-7	X	—	F002
		chloroform (trichloromethane)	67-66-3	X	D022	D022
		chromium	7440-47-3	X	D007	D007
		cyanide cleaning bath solutions	—	X	F009	F009
		cyanide plating bath solutions	—	X	F007	F007
		electroplating sludges	—	X	F006	F006
		ethyl benzene	100-41-4	X	See Note 2	N/A
		isobutanol (isobutyl alcohol)	78-83-1	X	—	F005
		lead	7439-92-1	X	D008	D008
		methanol	67-56-1	X	F003 See Note 2	N/A
		methylene chloride	75-09-2	X	F002	F002
		methyl ethyl ketone (2-butanone)	78-93-3	X	—	F005

Table A-30. (cont.) RF

RF IDC Numeric Code	Waste Description	Constituent/Compound/Item	CAS	Potential Hazardous Constituent, Chemical Property, or Hazardous Item (for supporting safe storage configurations)[HI, WG] See Note 26	Initial Gen Assigned HWN[WG, PC] See Note 29	WIPP WSPF Approved HWN[WS, AK]
336	PAPER AND RAGS MOIST (cont.) See Note 22	mercury	7439-97-6	X	D009	D009
		pyridine	110-86-1	X	—	F005
		nitrates (only for waste generated prior to 1975)	—	X	See Note 2	N/A
		potential corrosives if liquids exceed the WIPP-WAC limit in waste packaged before 1974	—	X	D002	N/A
		selenium	7782-49-2	X	—	D010
		silver	7440-22-4	X	D011	D011
		tetrachloroethylene (perclene)	127-18-4	X	—	F001/F002
		toluene	108-88-3	X	—	F005
		trichloroethylene (TCE)	79-01-6	X	F001	F001/F002
		xylene	1330-20-7	X	F003 See Note 2	N/A
337	PLASTIC, TEFLON, WASHABLES, PVC See Note 22	1,1,1-trichloroethane (TCA)	71-55-6	X[1, 5, 6, 8, 16, 30, 50]	F001[16, 29, 108, 182, 183] See Notes 4, 8, and 25	F001/F002[30, 50]
		1,1,2-trichloro-1,2,2-trifluoroethane	76-13-1	X	F002	F001/F002
		1,2-dichloroethane	107-06-2	X	—	D028
		1,1-dichloroethylene	75-35-4	X	—	D029
		1,2-dichloropropane	78-87-5	X	See Note 2	N/A
		2-ethoxyethanol	110-80-5	X	—	F005
		acetone	67-64-1	X	F003See Note 2	N/A
		arsenic	7440-38-2	X	—	D004
		barium	7440-39-3	X	—	D005
		benzene	71-43-2	X	—	F005
		cadmium	7440-43-9	X	D006	D006
		carbon disulfide	75-15-0	X	—	F005
		carbon tetrachloride	56-23-5	X	F001	F001
		chlorobenzene	108-90-7	X	—	F002
		chloroform (trichloromethane)	67-66-3	X	—	D022
		chromium	7440-47-3	X	D007	D007
		cyanide cleaning bath solutions	—	X	F009	F009
		cyanide plating bath solutions	—	X	F007	F007
		cyclohexane	110-82-7	X	See Note 2	N/A

Table A-30. (cont.) RF

RF IDC Numeric Code	Waste Description	Constituent/Compound/Item	CAS	Potential Hazardous Constituent, Chemical Property, or Hazardous Item (for supporting safe storage configurations)[HI, WG] See Note 26	Initial Gen Assigned HWN [WG, PC] See Note 29	WIPP WSPF Approved HWN [WS, AK]
337	PLASTIC, TEFLON, WASHABLES, PVC (cont.) See Note 22	electroplating sludges	—	X	F006	F006
		Isobutanol (isobutyl alcohol)	78-83-1	X	—	F005
		lead	7439-92-1	X	D008	D008
		methanol	67-56-1	X	F003 See Note 2	N/A
		methylene chloride	75-09-2	X	F002	F002
		mercury	7439-97-6	X	D009	D009
		methyl ethyl ketone (2-butanone)	78-93-3	X	—	F005
		nitrates (only for waste generated prior to 1974)	—	X	See Note 2	N/A
		pyridine	110-86-1	X	—	F005
		selenium	7782-49-2	X	—	D010
		silver	7440-22-4	X	D011	D011
		tetrachloroethylene (perclene)	127-18-4	X	—	F001/F002
		toluene	108-88-3	X	—	F005
		trichloroethylene (TCE)	79-01-6	X	F001	F001/F002
		xylene	1330-20-7	X	F003See Note 2	N/A
338	INSULATION AND CWS FILTER MEDIA See Note 22	1,1-dichloroethylene	75-35-4	X [1, 2, 4, 5, 16, 38]	X [16, 108, 182, 183] See Notes 4, 8, and 25	D029 [38]
		1,1,1-trichloroethane (TCA)	71-55-6	X	F001	F001/F002
		1,1,2-trichloro-1,2,2-trifluoroethane	76-13-1	X	F002	F001/F002
		1,2-dichloroethane	107-06-2	X	—	D028
		1-butanol	71-36-3	X	See Note 2	N/A
		acetone	67-64-1	X	See Note 2	N/A
		asbestos	1332-21-4	X	N/A	N/A
		arsenic	7440-38-2	X	—	D004
		barium	7440-39-3	X	D005	D005
		benzene	71-43-2	X	—	F005
		cadmium	7440-43-9	X	—	D006
		carbon disulfide	75-15-0	X	—	F005
		carbon tetrachloride	56-23-5	X	F001	F001
		chloroform (trichloromethane)	67-66-3	X	—	D022
		chromium	7440-47-3	X	D007	D007
		cyanide	57-12-5	X	See Note 2	N/A

Table A-30. (cont.) RF

RF IDC Numeric Code	Waste Description	Constituent/Compound/Item	CAS	Potential Hazardous Constituent, Chemical Property, or Hazardous Item (for supporting safe storage configurations)[HI, WG] See Note 26	Initial Gen Assigned HWN [WG, PC] See Note 29	WIPP WSPF Approved HWN [WS, AK]
338	INSULATION AND CWS FILTER MEDIA See Note 22 (cont.)	cyanide cleaning bath solutions	—	X	—	See Note 6
		cyanide plating bath solutions	—	X	—	See Note 6
		electroplating sludges	—	X	—	See Note 6
		ethyl benzene	100-41-4	X	See Note 2	N/A
		lead	7439-92-1	X	D008	D008
		mercury	7439-97-6	X	D009	D009
		methanol	67-56-1	X	See Note 2	N/A
		methyl ethyl ketone (2-butanone)	78-93-3	X	—	F005
		methylene chloride	75-09-2	X	F002	F002
		nitrates	—	X	See Note 2	N/A
		potential corrosives if liquids exceed the WIPP-WAC limit in waste packaged before 1974	—	X	D002	N/A
		selenium	7782-49-2	X	—	D010
		silver	7440-22-4	X	D011	D011
		tetrachloroethylene (perclene)	127-18-4	X	—	F001/F002
		toluene	108-88-3	X	—	F005
		trichloroethylene (TCE)	79-01-6	X	—	F001/F002
		xylene	1330-20-7	X	See Note 2	N/A
339	LEADED RUBBER GLOVES AND APRONS See Note 22	1,1-dichloroethylene	75-35-4	X [1, 2, 5, 6, 8, 16, 17, 33, 34, 41]	X [16, 33, 108, 182, 183] See Notes 4, 8, and 25	D029 [33, 41]
		1,1,1-trichloroethane (TCA)	71-55-6	X	F001	F001/F002
		1,1,2-trichloro-1,2,2-trifluoroethane	76-13-1	X	F001	F001/F002
		1,2-dichloroethane	107-06-2	X	—	D028
		acetone	67-64-1	X	F003 See Note 2	N/A
		benzene	71-43-2	X	—	F005
		carbon disulfide	75-15-0	X	—	F005 [41]
		carbon tetrachloride	56-23-5	X	F001	F001
		chloroform (trichloromethane)	67-66-3	X	D022	D022
		cyclohexane	110-82-7	X	See Note 2	N/A
		cyanide cleaning bath solutions	—	X	—	F009
		cyanide plating bath solutions	—	X	—	F007
		electroplating sludges	—	X	—	F006
		ethanol	64-17-5	X	See Note 2	N/A

Table A-30. (cont.) RF

RF IDC Numeric Code	Waste Description	Constituent/Compound/Item	CAS	Potential Hazardous Constituent, Chemical Property, or Hazardous Item (for supporting safe storage configurations)[HI, WG] See Note 26	Initial Gen Assigned HWN [WG, PC] See Note 29	WIPP WSPF Approved HWN [WS, AK]
339	LEADED RUBBER GLOVES AND APRONS See Note 22 (cont.)	ethyl benzene	100-41-4	X[5]	See Note 2	N/A
		isopropanol	67-63-0	X	See Note 2	N/A
		lead	7439-92-1	X	D008	D008
		nitrate	10099-74-8	X	N/A	N/A
		methanol	67-56-1	X	F003 See Note 2	N/A
		methyl chloride (chloromethane)	74-87-3	X	—	F001/F002
		methyl ethyl ketone (2-butanone)	78-93-3	X	—	F005
		methylene chloride	75-09-2	X	F002	F002
		potential corrosives if liquids exceed the WIPP-WAC limit	—	X	D002	N/A
		tetrachloroethylene (perclene)	127-18-4	X	F001	F001/F002
		toluene	108-88-3	X	F005	F005
		trichloroethylene (TCE)	79-01-6	X	—	F001/F002
		xylene	1330-20-7	X	F003 See Note 2	N/A
		zinc	7440-66-6	X	—	—
33A	WETP BIN PROGRAM - COMBUSTIBLES 33A (RF IDCs 335, 336, 337, and 339)	1,1,1-trichloroethane (TCA)	71-55-6	X[(21)]	F001 [(21, 108, 182, 183)] See Notes 4, 8, and 25	See Note 22
		1,1,2-trichloro-1,2,2-trifluoroethane	76-13-1	X	F002 See Note 4	
		barium	7440-39-3	X	—	
		cadmium	7440-43-9	X	—	
		carbon tetrachloride	56-23-5	X	F001 See Note 4	
		chloroform (trichloromethane)	67-66-3	X	—	
		chromium	7440-47-3	X	—	
		cyanide	57-12-5	X	—	
		cyanide cleaning bath solutions	—	X	—	
		cyanide plating bath solutions	—	X	—	
		cyclohexane	110-82-7	X	—	
		electroplating sludges	—	X	—	
		lead	7439-92-1	X	D008	
		mercury	7439-97-6	X	D009	
		methylene chloride	75-09-2	X	F002 See Note 4	
		potential corrosives if liquids exceed the WIPP WAC limit in waste packaged before 1974	—	X	D002	

Table A-30. (cont.) RF

RF IDC Numeric Code	Waste Description	Constituent/Compound/Item	CAS	Potential Hazardous Constituent, Chemical Property, or Hazardous Item (for supporting safe storage configurations)[HI, WG] See Note 26	Initial Gen Assigned HWN[WG, PC] See Note 29	WIPP WSPF Approved HWN[WS, AK]
33A	WETP BIN PROGRAM - COMBUSTIBLES 33A (cont.) (RF IDCs 335, 336, 337, and 339)	silver	7440-22-4	X	—	See Note 22
		tetrachloroethylene (perclene)	127-18-4	X	—	
		toluene	108-88-3	X	—	
		trichloroethylene (TCE)	79-01-6	X	—	
		xylene	1330-20-7	X	—	
33B	WETP BIN PROGRAM - COMBUSTIBLES B (RF IDCs 330, 337, and 339)	1,1,1-trichloroethane (TCA)	71-55-6	X[(21)]	F001[(21, 108, 182, 183)] See Notes 4, 8, and 25	See Note 22
		1,1,2-trichloro-1,2,2-trifluoroethane	76-13-1	X	F002 See Note 4	
		cadmium	7440-43-9	X	—	
		carbon tetrachloride	56-23-5	X	F001 See Note 4	
		chloroform (trichloromethane)	67-66-3	X	—	
		chromium	7440-47-3	X	—	
		cis-1,2-dichloroethylene	156-59-2	X	—	
		cyanide cleaning bath solutions	—	X	—	
		cyanide plating bath solutions	—	X	—	
		cyclohexane	110-82-7	X	—	
		electroplating sludges	—	X	—	
		ethyl benzene	100-41-4	X	—	
		lead	7439-92-1	X	D008	
		methylene chloride	75-09-2	X	F002 See Note 4	
		silver	7440-22-4	X	—	
		tetrachloroethylene (perclene)	127-18-4	X	—	
		toluene	108-88-3	X	—	
		trans-1,2-dichloroethylene	156-60-5	X	—	
		trichloroethylene (TCE)	79-01-6	X	—	
		xylene	1330-20-7	X	—	
360	INSULATION See Note 22	1,1-dichloroethylene	75-35-4	X[(1, 4, 5, 16, 38)]	See Notes 4, 8, and 25 (108, 182, 183)	D029[(38)]
		1,1,1-trichloroethane (TCA)	71-55-6	X	—	F001/F002
		1,1,2-trichloro-1,2,2-trifluoroethane	76-13-1	X	—	F002/F002
		1,2-dichloroethane	107-06-2	X	—	D028
		1-butanol	71-36-3	X	See Note 2	N/A
		acetone	67-64-1	X	See Note 2	N/A
		arsenic	7440-38-2	X	—	D004

Table A-30. (cont.) RF

RF IDC Numeric Code	Waste Description	Constituent/Compound/Item	CAS	Potential Hazardous Constituent, Chemical Property, or Hazardous Item (for supporting safe storage configurations)[HI, WG] See Note 26	Initial Gen Assigned HWN [WG, PC] See Note 29	WIPP WSPF Approved HWN [WS, AK]
360	INSULATION See Note 22 (cont.)	asbestos	1332-21-4	X	N/A	N/A
		barium	7440-39-3	X	—	D005
		benzene	71-43-2	X	—	F005
		cadmium	7440-43-9	X	—	D006
		carbon disulfide	75-15-0	X	—	F005
		carbon tetrachloride	56-23-5	X	—	F001
		chloroform (trichloromethane)	67-66-3	X	—	D022
		chromium	7440-47-3	X	—	D007
		cyanide	57-12-5	X	See Note 2	N/A
		cyanide cleaning bath solutions	—	See Note 6	—	See Note 6
		cyanide plating bath solutions	—	See Note 6	—	See Note 6
		electroplating sludges	—	See Note 6	—	See Note 6
		ethyl benzene	100-41-4	X	See Note 2	N/A
		lead	7439-92-1	X	—	D008
		mercury	7439-97-6	X	—	D009
		methanol	67-56-1	X	See Note 2	N/A
		methyl ethyl ketone (2-butanone)	78-93-3	X	—	F005
		methylene chloride	75-09-2	X	—	F002
		nitrates	—	X	See Note 2	N/A
		potential corrosives if liquids exceed the WIPP WAC limit in waste packaged before 1974	—	X	D002	N/A
		selenium	7782-49-2	X	—	D010
		silver	7440-22-4	X	—	D011
		tetrachloroethylene (perclene)	127-18-4	X	—	F001/F002
		toluene	108-88-3	X	—	F005
		trichloroethylene (TCE)	79-01-6	X	—	F001/F002
		xylene	1330-20-7	X	See Note 2	N/A
361	INSULATION HEEL	See RF-360	—	X[(1)]	See RF-360	—
368	MAGNESIUM OXIDE CRUCIBLES	calcium	7440-70-2	X[(16)]	See Notes 4, 8, and 25 (108, 182, 183)	See Note 22
		magnesium	7439-95-4	X	See Note 8	

Table A-30. (cont.) RF

RF IDC Numeric Code	Waste Description	Constituent/Compound/Item	CAS	Potential Hazardous Constituent, Chemical Property, or Hazardous Item (for supporting safe storage configurations)[HI, WG] See Note 26	Initial Gen Assigned HWN[WG, PC] See Note 29	WIPP WSPF Approved HWN[WS, AK]
370	LECO CRUCIBLE See Note 22	chromium	7440-47-3	X[6, 16]	See Notes 4, 8, and 25 (108, 182, 183)	See Note 22
		lead	7439-92-1	X	—	
371	FIRE BRICK See Note 22	1,1,1-trichloroethane (TCA)	71-55-6	X[5, 6, 8, 16, 32, 35, 44, 62]	See Notes 4, 8, and 25 (108, 182, 183)	F001/F002 (35, 44)
		1,1,2-trichloro-1,2,2-trifluoroethane	76-13-1	X	—	F001/F002
		acetone	67-64-1	X	F003 See Note 2	N/A
		arsenic	7440-38-2	X	—	D004
		asbestos	1332-21-4	X	—	—
		1,2-dichloroethane	107-06-2	X	—	D028
		1,1-dichloroethylene	75-35-4	X	—	D029
		barium	7440-39-3	X	—	D005
		benzene	71-43-2	X	—	F005
		carbon disulfide	75-15-0	—	—	F005
		cadmium	7440-43-9	X	—	D006
		carbon tetrachloride	56-23-5	X	—	F001
		chloroform (trichloromethane)	67-66-3	X	—	D022
		chromium	7440-47-3	X	—	D007
		cyanide cleaning bath solutions	—	X	See Note 17	N/A
		cyanide plating bath solutions	—	X	See Note 17	N/A
		electroplating sludges	—	X	See Note 17	N/A
		lead	7439-92-1	X	—	D008
		mercury	7439-97-6	X	—	D009
		methanol	67-56-1	X	F003 See Note 2	N/A
		methylene chloride	75-09-2	X	—	F002
		methyl ethyl ketone (2-butanone)	78-93-3	X	—	F005
		nitrates	—	X	—	—
		selenium	7782-49-2	X	—	D010
		silver	7440-22-4	X	—	D011
		tetrachloroethylene (perclene)	127-18-4	X	—	F001/F002
		toluene	108-88-3	X	—	F005
		trichloroethylene (TCE)	79-01-6	X	—	F001/F002
		xylene	1330-20-7	X	F003 See Note 2	N/A

Table A-30. (cont.) RF

RF IDC Numeric Code	Waste Description	Constituent/Compound/Item	CAS	Potential Hazardous Constituent, Chemical Property, or Hazardous Item (for supporting safe storage configurations)[HI, WG] See Note 26	Initial Gen Assigned HWN[WG, PC] See Note 29	WIPP WSPF Approved HWN[WS, AK]
372	GRIT	beryllium (not beryllium powder)	7440-41-7	X[(1, 4, 5, 16)]	See Notes 8 and 25 (108, 182, 183)	See Note 22
		chromium	7440-47-3	X	D007[(16)]	
374	BLACKTOP, CONCRETE, AND CONSTRUCTION RUBBLE	1,1,1-trichloroethane (TCA)	71-55-6	X[(2, 5, 8, 16, 66)]	F001[(16, 108, 182, 183)] See Notes 8 and 25	See Note 22
		1,1,2-trichloro-1,2,2-trifluoroethane	76-13-1	X	F002	
		acetone	67-64-1	X	—	
		arsenic	7440-38-2	X	—	
		barium	7440-39-3	X	—	
		benzene	71-43-2	X	—	
		cadmium	7440-43-9	X	—	
		carbon tetrachloride	56-23-5	X	F001	
		chromium	7440-47-3	X	—	
		cyanide	57-12-5	X	—	
		cyanide cleaning bath solutions	—	X	—	
		cyanide plating bath solutions	—	X	—	
		electroplating sludges	—	X	—	
		ethyl benzene	100-41-4	X	—	
		lead	7439-92-1	X	—	
		mercury	7439-97-6	X	—	
		methanol	67-56-1	X	—	
		methyl ethyl ketone (2-butanone)	78-93-3	X	—	
		methylene chloride	75-09-2	X	F002	
		multi-source leachate (F039)	—	X	—	
		nitrobenzene	98-95-3	X	—	
		selenium	7782-49-2	X	—	
		silver	7440-22-4	X	—	
		tetrachloroethylene (perclene)	127-18-4	X	—	
		toluene	108-88-3	X	—	
		trichloroethylene (TCE)	79-01-6	X	—	
		xylene	1330-20-7	X	—	
375	OIL-DRI (Residues from incinerator)	See RF-292	71-55-6	X[(1, 2, 5, 16)]	See RF-292	—

Table A-30. (cont.) RF

RF IDC Numeric Code	Waste Description	Constituent/Compound/Item	CAS	Potential Hazardous Constituent, Chemical Property, or Hazardous Item (for supporting safe storage configurations)[HI, WG] See Note 26	Initial Gen Assigned HWN[WG, PC] See Note 29	WIPP WSPF Approved HWN[WS, AK]
376	CEMENTED INSULATION AND FILTER MEDIA See Note 22	1,1-dichloroethylene	75-35-4	X[(1, 2, 4, 5, 8,16, 31, 38)]	See Notes 4, 8, and 25 (108, 182, 183)	D029[(31, 38)]
		1,1,1-trichloroethane (TCA)	71-55-6	X	F001[(16)]	F001/F002
		1,1,2-trichloro-1,2,2-trifluoroethane	76-13-1	X	F002	F001/F002
		1,2-dichloroethane	107-06-2	X	—	D028
		1-butanol	71-36-3	X	See Note 2	N/A
		acetone	67-64-1	X	See Note 2	N/A
		arsenic	7440-38-2	X	—	D004
		asbestos	1332-21-4	X	N/A	N/A
		barium	7440-39-3	X	—	D005
		benzene	71-43-2	X	—	F005
		cadmium	7440-43-9	X	—	D006
		carbon disulfide	75-15-0	X	—	F005
		carbon tetrachloride	56-23-5	X	F001	F001
		chloroform (trichloromethane)	67-66-3	X	—	D022
		chromium	7440-47-3	X	—	D007
		cyanide	57-12-5	X	See Note 2	N/A
		cyanide cleaning bath solutions	—	X	—	F009
		cyanide plating bath solutions	—	X	—	F007
		electroplating sludges	—	X	—	F006
		ethyl benzene	100-41-4	X	See Note 2	N/A
		lead	7439-92-1	X	—	D008
		mercury	7439-97-6	X	—	D009
		methanol	67-56-1	X	See Note 2	N/A
		methyl ethyl ketone (2-butanone)	78-93-3	X	—	F005
		methylene chloride	75-09-2	X	F002	F002
		nitrates	—	X	—	N/A
		selenium	7782-49-2	X	—	D010
		silver	7440-22-4	X	—	D011
		tetrachloroethylene (perclene)	127-18-4	X	—	F001/F002
		toluene	108-88-3	X	—	F005
		trichloroethylene (TCE)	79-01-6	X	—	F001/F002
		xylene	1330-20-7	X	See Note 2	N/A

Table A-30. (cont.) RF

RF IDC Numeric Code	Waste Description	Constituent/Compound/Item	CAS	Potential Hazardous Constituent, Chemical Property, or Hazardous Item (for supporting safe storage configurations)[HI, WG] See Note 26	Initial Gen Assigned HWN [WG, PC] See Note 29	WIPP WSPF Approved HWN [WS, AK]
377	COARSE FIRE BRICK See Note 22	1,1,1-trichloroethane (TCA)	71-55-6	X[8,16, 32,35, 44, 62]	See Notes 4, 8, and 25 [108, 182, 183]	F001/F002 [32, 35, 44]
		1,1,2-trichloro-1,2,2-trifluoroethane	76-13-1	X	—	F001/F002
		1,2-dichloroethane	107-06-2	X	—	D028
		1,1-dichloroethylene	75-35-4	X	—	D029
		acetone	67-64-1	—	F003 [35] See Note 2	N/A
		arsenic	7440-38-2	X	—	D004
		asbestos	1332-21-4	X	—	N/A
		barium	7440-39-3	X	—	D005
		benzene	71-43-2	X	—	F005
		cadmium	7440-43-9	X	—	D006
		carbon disulfide	75-15-0	X	—	F005
		carbon tetrachloride	56-23-5	X	—	F001
		chloroform (trichloromethane)	67-66-3	X	—	D022
		chromium	7440-47-3	X[16]	—	D007
		cyanide cleaning bath solutions	—	X	See Note 17	N/A
		cyanide plating bath solutions	—	X	See Note 17	N/A
		electroplating sludges	—	X	See Note 17	N/A
		lead	7439-92-1	X	—	D008
		mercury	7439-97-6	X	—	D009
		methanol	67-56-1	X	F003 See Note 2	N/A
		methylene chloride	75-09-2	X	—	F002
		nitrates	—	X	See Note 2	N/A
		selenium	7782-49-2	X	—	D010
		silver	7440-22-4	X	—	D011
		tetrachloroethylene (perclene)	127-18-4	X	—	F001/F002
		toluene	108-88-3	X	—	F005
		trichloroethylene (TCE)	79-01-6	X	—	F001/F002
		xylene	1330-20-7	X	F003 See Note 2	N/A
391	CRUCIBLES AND SAND	magnesium	7439-95-4	X[16]	See Notes 4, 8, and 25 [108, 182, 183]	See Note 22
392	SAND, SLAG, AND CRUCIBLE	calcium	7440-70-2	X[1, 5, 6, 8, 16]	See Notes 4, 8, and 25 [108, 182, 183]	See Note 22
		magnesium	7439-95-4	X	See Note 8	

Table A-30. (cont.) RF

RF IDC Numeric Code	Waste Description	Constituent/Compound/Item	CAS	Potential Hazardous Constituent, Chemical Property, or Hazardous Item (for supporting safe storage configurations)[HI, WG] See Note 26	Initial Gen Assigned HWN [WG, PC] See Note 29	WIPP WSPF Approved HWN [WS, AK]
393	SAND, SLAG, AND CRUCIBLE HEELS	calcium	7440-70-2	X	See Note 8	—
		chromium	7440-47-3	X	D007	—
		methylene chloride	75-09-2	X	F002	—
		nitrates	—	X	—	—
409	MOLTEN SALT – 30% UNPULVERIZED	1,1,1-trichloroethane (TCA)	71-55-6	X[(1, 5, 6, 8, 16)]	F001/F002	—
		1,2-dichloroethane	107-06-2	X	D028	—
		lead	7439-92-1	X[(8)]	D008	—
		mercury	7439-97-6	X	D009	—
		methylene chloride	75-09-2	X	F002	—
		carbon tetrachloride	56-23-5	X	F001	—
		chromium	7440-47-3	X	D007	—
		calcium	7440-70-2	X	See Note 8	—
		potassium	7440-09-7	X	See Note 8	—
		magnesium	7439-95-4	X	See Note 8	—
		sodium	7440-23-5	X	See Note 8	—
		zinc	7440-66-6	X	—	—
		toluene	108-88-3	X	F005	—
410	MOLTEN SALT – 30% PULVERIZED	mercury	7439-97-6	X[(1, 9)]	D009	—
411	ELECTROREFINING SALT	1,1,2-trichloro-1,2,2-trifluoroethane	76-13-1	X[(1, 5, 8, 16)]	F001/F002[(193)]	—
		1,1,1-trichloroethane (TCA)	71-55-6	X	F001/F002	—
		benzene	71-43-2	X	F005	—
		chloroform (trichloromethane)	67-66-3	X	D022	—
		carbon tetrachloride	56-23-5	X	F001	—
		arsenic	7440-38-2	X	D004	—
		barium	7440-39-3	X	D005	—
		cadmium	7440-43-9	X	D006	—
		chromium	7440-47-3	X	D007	—
		calcium	7440-70-2	X	—	—
		lead	7439-92-1	X	D008	—
		mercury	7439-97-6	X	D009	—
		selenium	7782-49-2	X	D010	—
		silver	7440-22-4	X	D011	—
		potassium	7440-09-7	X	See Note 8	—

Table A-30. (cont.) RF

RF IDC Numeric Code	Waste Description	Constituent/Compound/Item	CAS	Potential Hazardous Constituent, Chemical Property, or Hazardous Item (for supporting safe storage configurations)[HI, WG] See Note 26	Initial Gen Assigned HWN [WG, PC] See Note 29	WIPP WSPF Approved HWN [WS, AK]
411	ELECTROREFINING SALT (cont.)	magnesium	7439-95-4	X	See Note 8	—
		sodium	7440-23-5	X	See Note 8	—
		zinc	7440-66-6	X	—	—
		trichloroethylene (TCE)	79-01-6	X	F001/F002	—
		methylene chloride	75-09-2	X	F002	—
		toluene	108-88-3	X	F005	—
		xylene	1330-20-7	X	See Note 2	—
412	GIBSON SALTS	potential corrosive if wet	—	X[4, 16]	D002 (See Note 2)	—
		carbon tetrachloride	56-23-5	X	F001[193]	—
		chromium	7440-47-3	X	D007	—
		calcium	7440-70-2	X	See Note 8	—
		potassium	7440-09-7	X	See Note 8	—
		magnesium	7439-95-4	X	See Note 8	—
		sodium	7440-23-5	X	See Note 8	—
		zinc	7440-66-6	X	—	—
414	DIRECT OXIDE REDUCTION SALT	1,1,1-trichloroethane (TCA)	71-55-6	X[5, 6, 8, 16]	F001/F002[193]	—
		carbon tetrachloride	56-23-5	X	F001	—
		chromium	7440-47-3	X	D007	—
		calcium	7440-70-2	X	See Note 8	—
		potassium	7440-09-7	X	See Note 8	—
		magnesium	7439-95-4	X	See Note 8	—
		sodium	7440-23-5	X	See Note 8	—
		zinc	7440-66-6	X	—	—
		ethyl benzene	100-41-4	X	F003 (See Note 2)	—
		trichloroethylene (TCE)	79-01-6	X	F001/F002	—
		toluene	108-88-3	X	F005	—
		xylene	1330-20-7	X	F003 (See Note 2)	—

Table A-30. (cont.) RF

RF IDC Numeric Code	Waste Description	Constituent/Compound/Item	CAS	Potential Hazardous Constituent, Chemical Property, or Hazardous Item (for supporting safe storage configurations)[HI, WG] See Note 26	Initial Gen Assigned HWN [WG, PC] See Note 29	WIPP WSPF Approved HWN [WS, AK]
416	ZINC MAGNESIUM ALLOY METALS	carbon tetrachloride	56-23-5	X [9, 16]	See Notes 4, 8, and 25 (108, 182, 183)	See Note 22
		chromium	7440-47-3	X	—	
		calcium	7440-70-2	X	See Note 8	
		potassium	7440-09-7	X	See Note 8	
		magnesium	7439-95-4	X	See Note 8	
		sodium	7440-23-5	X	See Note 8	
		zinc	7440-66-6	X	—	
420	ASH, INCINERATOR (VIRGIN)	See RF-292	71-55-6	X [16]	See RF-292	—
421	ASH HEELS	See RF-292	71-55-6	X [16]	See RF-292	—
422	SOOT	See RF-292	71-55-6	X [8, 16]	See RF-292	—
425	FLUID BED ASH	chromium	7440-47-3	X [16]	D007 [16, 193]	—
		methanol	67-56-1	X	F003 (See Note 2)	—
		1,1,2-trichloro-1,2,2-trifluoroethane	76-13-1	X	F001/F002	—
		acetone	67-64-1	X	F003 (See Note 2)	—
		benzene	71-43-2	X	F005	—
		barium (not TCLP)	7440-39-3	X	—	—
		cadmium (not TCLP)	7440-43-9	X	—	—
		carbon tetrachloride	56-23-5	X	F001	—
		lead (not TCLP)	7439-92-1	X	—	—
		methyl ethyl ketone (2-butanone)	78-93-3	X	F005	—
		methylene chloride	75-09-2	X	F002—	—
		tetrachloroethylene (perclene)	127-18-4	X	F001/F002	—
		trichloroethylene (TCE)	79-01-6	X	F001/F002	—
		toluene	108-88-3	X	F005	—
		xylene	1330-20-7	X	F003 (See Note 2)	—
430	ION COLUMN UNLEACHED RESIN	nitrates	—	X [1, 4, 5]	—	See Note 22
		potential ignitable if deemed a DOT oxidizer	—	X	—	
431	LEACHED RESIN	nitrates	—	X [1, 9]	—	See Note 22
		potential ignitable if deemed a DOT oxidizer	—	X	—	

Table A-30. (cont.) RF

RF IDC Numeric Code	Waste Description	Constituent/Compound/Item	CAS	Potential Hazardous Constituent, Chemical Property, or Hazardous Item (for supporting safe storage configurations)[HI, WG] See Note 26	Initial Gen Assigned HWN[WG, PC] See Note 29	WIPP WSPF Approved HWN[WS, AK]
432	RESIN, LEACHED AND CEMENTED	1,1,1-trichloroethane (TCA)	71-55-6	X[5, 6, 8, 16, 43]	F001/F002[5, 16]	—
		1,1,2-trichloro-1,2,2-trifluoroethane	76-13-1	X	F001/F002[5]	—
		benzene	71-43-2	X	F005	—
		chloroform (trichloromethane)	67-66-3	X	D022	—
		1,2-dichloroethane	107-06-2	X	D028	—
			75-35-4	X	D029	—
		chromium	7440-47-3	X	D007	—
		carbon tetrachloride	56-23-5	X	F001	—
		ethyl benzene	100-41-4	X	F003 (See Note 2)	—
		isopropanol	67-63-0	X	F003 (See Note 2)	—
		lead	7439-92-1	X	D008	—
		methylene chloride	75-09-2	X	F002	—
		nitrates	—	X	—	—
		tetrachloroethylene (perclene)	127-18-4	X	F001/F002	—
		toluene	108-88-3	X	F005	—
		trichloroethylene (TCE)	79-01-6	X	F001	—
		xylene	1330-20-7	X	F003 (See Note 2)	—
440	GLASS See Note 22	1,1-dichloroethylene	75-35-4	X[5, 6, 8, 16, 28, 40]	See Notes 8 and 25 (108, 182, 183)	D029[28, 40]
		1,1,1-trichloroethane (TCA)	71-55-6	X	F001[5, 16]	F001/F002
		1,1,2-trichloro-1,2,2-trifluoroethane	76-13-1	X	F002	F001/F002
		1,2-dichloroethane	107-06-2	X	—	D028
		acetone	67-64-1	X	See Note 2	N/A
		barium	7440-39-3	X	D005	D005
		benzene	71-43-2	X	—	F005
		carbon disulfide	75-15-0	X	—	F005
		carbon tetrachloride	56-23-5	X	F001[5]	F001
		chloroform (trichloromethane)	67-66-3	X	D022[5]	D022
		cyclohexane (ignitable liquid)	110-82-7	X	See Note 2	N/A
		ethanol	64-17-5	X	See Note 2	N/A
		ethyl benzene	100-41-4	X	See Note 2	N/A
		isooctane	26635-64-3	X	See Note 2	N/A
		isopropanol	67-63-0	X	See Note 2	N/A
		lead	7439-92-1	X	D008	D008

Table A-30. (cont.) RF

RF IDC Numeric Code	Waste Description	Constituent/Compound/Item	CAS	Potential Hazardous Constituent, Chemical Property, or Hazardous Item (for supporting safe storage configurations)[HI, WG] See Note 26	Initial Gen Assigned HWN[WG, PC] See Note 29	WIPP WSPF Approved HWN[WS, AK]
440	GLASS (cont.) See Note 22	magnesium	7439-95-4	X	See Notes 2 and 8	N/A
		mercury	7439-97-6	X	D009	D009
		methanol	67-56-1	X	See Note 2	N/A
		methyl ethyl ketone (2-butanone)	78-93-3	X	—	F005
		methylene chloride	75-09-2	X	F002	F002
		potential corrosives if liquids exceed the WIPP-WAC limit	—	X	D002	N/A
		tetrachloroethylene (perclene)	127-18-4	X	—	F001/F002
		toluene	108-88-3	X	—	F005
		trichloroethylene (TCE)	79-01-6	X	—	F001/F002
		xylene	1330-20-7	X	See Note 2	N/A
		zinc	7440-66-6	X	N/A	N/A
441	RASCHIG RINGS, UNLEACHED See Note 22	1,1,1-trichloroethane (TCA)	71-55-6	X (1, 5, 6, 8, 16, 23, 48)	See Notes 8 and 25 (108, 182, 183)	F001/F002 (23, 48)
		1,1,2-trichloro-1,2,2-trifluoroethane	76-13-1	X	—	F002
		acetone	67-64-1	X	See Note 2	N/A
		carbon tetrachloride	56-23-5	X	—	F001
		chloroform (trichloromethane)	67-66-3	X	—	D022
		lead	7439-92-1	X	D008	D008
		mercury	7439-97-6	X	—	D009
		methanol	67-56-1	X	See Note 2	N/A
		methyl ethyl ketone (2-butanone)	78-93-3	X	—	F005
		methylene chloride	75-09-2	X	—	F002
		nitrates	—	X	See Note 2	N/A
		potential corrosives if liquids exceed the WIPP-WAC limit	—	X	D002	N/A
		tetrachloroethylene (perclene)	127-18-4	X	—	F002
		trichloroethylene (TCE)	79-01-6	X	—	F002
		1,1,1-trichloroethane (TCA)	71-55-6	X (5, 8, 16, 23)	F001 (21) See Note 4	F001/F002 (23, 48)
		1,1,2-trichloro-1,2,2-trifluoroethane	76-13-1	X	—	F002
		acetone	67-64-1	X	See Note 2	N/A
		carbon tetrachloride	56-23-5	X	F001 See Note 4	F001
		chloroform (trichloromethane)	67-66-3	X	—	D022

Table A-30. (cont.) RF

RF IDC Numeric Code	Waste Description	Constituent/Compound/Item	CAS	Potential Hazardous Constituent, Chemical Property, or Hazardous Item (for supporting safe storage configurations)[HI, WG] See Note 26	Initial Gen Assigned HWN [WG, PC] See Note 29	WIPP WSPF Approved HWN [WS, AK]
441	RASCHIG RINGS, UNLEACHED (cont.) See Note 22	ethyl benzene	100-41-4	X	See Note 2	N/A
		lead	7439-92-1	X	D008	D008
		mercury	7439-97-6	X	—	D009
		methanol	67-56-1	X	See Note 2	N/A
		methyl ethyl ketone (2-butanone)	78-93-3	X	—	F005
		methylene chloride	75-09-2	X	F002 See Note 4	F002
		nitrates	—	X	See Note 2	N/A
		potential corrosives if liquids exceed the WIPP-WAC limit	—	X	D002	N/A
		tetrachloroethylene (perclene)	127-18-4	X	—	F002
		trichloroethylene (TCE)	79-01-6	X	—	F002
442	RASCHIG RINGS, LEACHED See Note 22	See RF-441	See RF-441	See RF-441	See RF-441 See Notes 4, 8, and 25 (108, 182, 183)	See RF-441
44A	WETP BIN PROGRAM - GLASS (RF IDCs 440 and 442)	1,1,1-trichloroethane (TCA)	71-55-6	X(21)	F001 (21, 108, 182, 183) See Notes 4, 8, and 25	See Note 22
		barium	7440-39-3	X	—	
		carbon tetrachloride	56-23-5	X	F001	
		cyclohexane (ignitable liquid)	110-82-7	X	See Notes 2 and 3	
		lead	7439-92-1	X	D008	
		mercury	7439-97-6	X	D009	
		methylene chloride	75-09-2	X	F002	
		potential corrosives if liquids exceed the WIPP WAC limit	—	X	D002	
		toluene	108-88-3	X	See Note 4	
		trichloroethylene (TCE)	79-01-6	X	See Note 4	
460	WASHABLES, RUBBER, PLASTIC	1,1,1-trichloroethane (TCA)	71-55-6	X(1, 5)	See Notes 8 and 25 (108, 182, 183)	See Note 22
		1,1,2-trichloro-1,2,2-trifluoroethane	76-13-1	X	—	
		carbon tetrachloride	56-23-5	X	—	
		methylene chloride	75-09-2	X	—	

Table A-30. (cont.) RF

RF IDC Numeric Code	Waste Description	Constituent/Compound/Item	CAS	Potential Hazardous Constituent, Chemical Property, or Hazardous Item (for supporting safe storage configurations)[HI, WG] See Note 26	Initial Gen Assigned HWN [WG, PC] See Note 29	WIPP WSPF Approved HWN [WS, AK]
463	LEADED RUBBER GLOVES AND APRONS See Note 22	1,1-dichloroethylene	75-35-4	X [5, 41]	See Notes 8 and 25 (108, 182, 183)	D029 [41]
		1,1,1-trichloroethane (TCA)	71-55-6	X	—	F001/F002
		1,1,2-trichloro-1,2,2-trifluoroethane	76-13-1	X	—	F001/F002
		1,2-dichloroethane	107-06-2	X	—	D028
		benzene	71-43-2	X	—	F005
		carbon disulfide	75-15-0	X	—	F005
		carbon tetrachloride	56-23-5	X	—	F001
		chloroform (trichloromethane)	67-66-3	X	—	D022
		cyanide cleaning bath solutions	—	X	—	F009
		cyanide plating bath solutions	—	X [1, 5, 41]	—	F007 [41]
		electroplating sludges	—	X	—	F006
		ethanol	64-17-5	X	See Note 2	N/A
		isopropanol	67-63-0	X	See Note 2	N/A
		lead	7439-92-1	X	D008 [1]	D008
		magnesium	7439-95-4	X	See Note 2 and 8	N/A
		methanol	67-56-1	X	See Note 2	N/A
		methyl ethyl ketone (2-butanone)	78-93-3	X	—	F005
		methylene chloride	75-09-2	X	—	F002
		potential corrosives if liquids exceed the WIPP-WAC limit	—	X	D002	N/A
		tetrachloroethylene (perclene)	127-18-4	X	—	F001/F002
		toluene	108-88-3	X	—	F005
		trichloroethylene (TCE)	79-01-6	X	—	F001/F002
		xylene	1330-20-7	X	See Note 2	N/A
		zinc	7440-66-6	X	—	—
464	BENELEX AND PLEXIGLASS	1,1,1-trichloroethane (TCA)	71-55-6	X [1, 5, 16]	See Notes 4, 8, and 25 (108, 182, 183)	See Note 22
		barium	7440-39-3	X	—	
		carbon tetrachloride	56-23-5	X	—	
		lead	7439-92-1	X	D008 [16]	
		toluene	108-88-3	X	—	
		trichloroethylene (TCE)	79-01-6	X	—	

Table A-30. (cont.) RF

RF IDC Numeric Code	Waste Description	Constituent/Compound/Item	CAS	Potential Hazardous Constituent, Chemical Property, or Hazardous Item (for supporting safe storage configurations)[HI, WG] See Note 26	Initial Gen Assigned HWN [WG, PC] See Note 29	WIPP WSPF Approved HWN [WS, AK]
480	NON-SPECIAL SOURCE METAL See Note 22	1,1-dichloroethylene	75-35-4	X [1, 2, 5, 6, 8, 16, 21, 27, 39]	See Notes 4, 8, and 25 [108, 182, 183]	D029 [27, 39, 193]
		1,1,1-trichloroethane (TCA)	71-55-6	X	F001 [16, 21] See Note 4	F001/F002
		1,1,2-trichloro-1,2,2-trifluoroethane	76-13-1	X	F002 See Note 4	F001/F002
		1,2-dichloroethane	107-06-2	X	D028	D028
		1-butanol	71-36-3	X	—	See Note 2
		acetone	67-64-1	X	F003 See Note 2	F003 See Notes 1 and 2
		asbestos	1332-21-4	X	N/A	N/A
		arsenic	7440-38-2	X	—	D004
		barium	7440-39-3	X	—	D005
		benzene	71-43-2	X	—	F005
		beryllium (not beryllium powder)	7440-41-7	X	—	—
		cadmium	7440-43-9	X	D006	D006
		carbon disulfide	75-15-0	X	—	F005
		carbon tetrachloride	56-23-5	X	F001	F001
		chloroform (trichloromethane)	67-66-3	X	—	D022
		chromium	7440-47-3	X	D007	D007
		cyanide	57-12-5	X	See Note 2	N/A
		cyanide cleaning bath solutions	—	X	F009	F009
		cyanide plating bath solutions	—	X	F007	F007
		cyclohexane (ignitable liquid)	110-82-7	X	See Note 2	N/A
		electroplating sludges	—	X	F006	F006
		ethyl benzene	100-41-4	X	See Note 2	N/A
		lead	7439-92-1	X	D008	D008
		mercury	7439-97-6	X	D009	D009
		methane	74-82-8	X	See Note 2	N/A
		methanol	67-56-1	X	F003 See Note 2	F003 See Notes 1 and 2
		methyl ethyl ketone (2-butanone)	78-93-3	X	—	F005
		methyl isobutyl ketone	108-10-1	X	See Note 2	N/A
		methylene chloride	75-09-2	X	F002	F002
		nitrates	—	X	See Note 2	N/A
		potential ignitable if liquid present	—	X	See Note 2	N/A

Table A-30. (cont.) RF

RF IDC Numeric Code	Waste Description	Constituent/Compound/Item	CAS	Potential Hazardous Constituent, Chemical Property, or Hazardous Item (for supporting safe storage configurations)[HI, WG] See Note 26	Initial Gen Assigned HWN [WG, PC] See Note 29	WIPP WSPF Approved HWN [WS, AK]
480	NON-SPECIAL SOURCE METAL See Note 22 (cont.)	polychlorinated-biphenyls (PCBs)	1336-36-3	X	N/A	N/A
		selenium	7782-49-2	X	—	D010
		silver	7440-22-4	X	D011	D011
		tetrachloroethylene (perclene)	127-18-4	X	—	F001/F002
		toluene	108-88-3	X	—	F005
		trichloroethylene (TCE)	79-01-6	X	F001	F001/F002
		xylenes (m, p, & o)	1330-20-7	X	F003 See Note 2	F003 See Notes 1 and 2
481	LEACHED NON-SPECIAL SOURCE METAL See Note 22	1,1-dichloroethylene	75-35-4	X [5, 6, 8, 16, 27, 39]	See Notes 4, 8, and 25 [108, 182, 183]	D029
		1,1,1-trichloroethane (TCA)	71-55-6	X	—	F001/F002
		1,1,2-trichloro-1,2,2-trifluoroethane	76-13-1	X	F002 [16]	F001/F002
		1,2-dichloroethane	107-06-2	X	D028	D028
		acetone	67-64-1	X	—	F003 See Notes 1 and 2
		arsenic	7440-38-2	X	—	D004
		barium	7440-39-3	X	—	D005
		benzene	71-43-2	X	—	F005
		cadmium	7440-43-9	X	D006	D006
		carbon disulfide	75-15-0	X	—	F005
		carbon tetrachloride	56-23-5	X	F001	F001
		chloroform (trichloromethane)	67-66-3	X	—	D022
		chromium	7440-47-3	X	D007	D007
		cyanide cleaning bath solutions	—	X	F009	F009
		cyanide plating bath solutions	—	X	F007	F007
		electroplating sludges	—	X	F006	F006
		ethyl benzene	100-41-4	X	See Note 2	N/A
		lead	7439-92-1	X	D008	D008
		mercury	7439-97-6	X	D009	D009
		methanol	67-56-1	X	—	F003 See Notes 1 and 2
		methyl ethyl ketone (2-butanone)	78-93-3	X	—	F005
		methylene chloride	75-09-2	X	F002	F002

Table A-30. (cont.) RF

RF IDC Numeric Code	Waste Description	Constituent/Compound/Item	CAS	Potential Hazardous Constituent, Chemical Property, or Hazardous Item (for supporting safe storage configurations)[HI, WG] See Note 26	Initial Gen Assigned HWN[WG, PC] See Note 29	WIPP WSPF Approved HWN[WS, AK]
481	LEACHED NON-SPECIAL SOURCE METAL See Note 22 (cont.)	selenium	7782-49-2	X	—	D010
		silver	7440-22-4	X	D011	D011
		tetrachloroethylene (perclene)	127-18-4	X	—	F001/F002
		toluene	108-88-3	X	—	F005
		trichloroethylene (TCE)	79-01-6	X	F001	F001/F002
		xylenes (m, p, & o)	1330-20-7	X	See Note 2	F003 See Notes 1 and 2
488	GLOVEBOX PARTS W/LEAD	lead	7439-92-1	X[2, 8]	D008 See Notes 4, 8, and 25 (108, 182, 183)	See Note 22
48A	WETP BIN PROGRAM - METAL (RF IDCs 480 and 481)	1,1,1-trichloroethane (TCA)	71-55-6	X[21]	F001[21, 108, 182, 183] See Notes 4, 8, and 25	See Note 22
		1,1,2-trichloro-1,2,2-trifluoroethane	76-13-1	X	F002 See Note 4	
		1,1-dichloroethylene	75-35-4	X	—	
		1,2-dichloroethane	107-06-2	X	D028	
		arsenic	7440-38-2	X	—	
		barium	7440-39-3	X	—	
		beryllium (not beryllium powder)	7440-41-7	X	—	
		cadmium	7440-43-9	X	—	
		carbon tetrachloride	56-23-5	X	F001 See Note 4	
		chromium	7440-47-3	X	—	
		cyanide	57-12-5	X	—	
		cyanide cleaning bath solutions	—	X	—	
		cyanide plating bath solutions	—	X	—	
		cyclohexane (ignitable liquid)	110-82-7	X	See Notes 2 and 3	
		dichloroethylene	25323-30-2	X	—	
		electroplating sludges	—	X	—	
		ethyl benzene	100-41-4	X	—	
		lead	7439-92-1	X	D008	
		mercury	7439-97-6	X	D009	
		methane	74-82-8	X	—	
		methylene chloride	75-09-2	X	F002 See Note 4	
		selenium	7782-49-2	X	—	
		silver	7440-22-4	X	—	

Table A-30. (cont.) RF

RF IDC Numeric Code	Waste Description	Constituent/Compound/Item	CAS	Potential Hazardous Constituent, Chemical Property, or Hazardous Item (for supporting safe storage configurations)[HI, WG] See Note 26	Initial Gen Assigned HWN[WG, PC] See Note 29	WIPP WSPF Approved HWN[WS, AK]
48A	WETP BIN PROGRAM - METAL (RF IDCs 480 and 481) (cont.)	toluene	108-88-3	X	—	See Note 22
		trichloroethylene (TCE)	79-01-6	X	—	
		xylene	1330-20-7	X	—	
490	HEPA FILTERS AND CWS FILTERS See Note 22	1,1-dichloroethylene	75-35-4	—	See Notes 4, 8, and 25 (108, 182, 183)	D029 (31, 38)
		1,1,1-trichloroethane (TCA)	71-55-6	X (1, 2, 5, 16, 31, 38)	F001 (16)	F001/F002
		1,1,2-trichloro-1,2,2-trifluoroethane	76-13-1	X	F002	F001/F002
		1,2-dichloroethane	107-06-2	X	—	D028
		1-butanol	71-36-3	X	See Note 2	N/A
		acetone	67-64-1	X	See Note 2	N/A
		arsenic	7440-38-2	X	—	D004
		asbestos	1332-21-4	X	N/A	N/A
		barium	7440-39-3	X	D005	D005
		benzene	71-43-2	X	—	F005
		beryllium (not beryllium powder)	7440-41-7	X	—	N/A
		cadmium	7440-43-9	X	—	D006
		carbon disulfide	75-15-0	X	F005	F005
		carbon tetrachloride	56-23-5	X	F001	F001
		chloroform (trichloromethane)	67-66-3	X	D022	D022
		chromium	7440-47-3	X	D007	D007
		cyanide cleaning bath solutions	—	X	F009	F009
		cyanide plating bath solutions	—	X	F007	F007
		electroplating sludges	—	X	F006	F006
		ethyl benzene	100-41-4	X	See Note 2	N/A
		lead	7439-92-1	X	D008	D008
		mercury	7439-97-6	X	D009	D009
		methanol	67-56-1	X	See Note 2	N/A
		methyl ethyl ketone (2-butanone)	78-93-3	X	—	F005
		methylene chloride	75-09-2	X	F002	F002
		nitrates (only for waste generated in Bldg 374 after 1984)	—	X	See Note 2	N/A
		polychlorinated-biphenyls (ballast found in LLW box)	1336-36-3	PCB (67)	N/A	N/A
		selenium	7782-49-2	X	—	D010

Table A-30. (cont.) RF

RF IDC Numeric Code	Waste Description	Constituent/Compound/Item	CAS	Potential Hazardous Constituent, Chemical Property, or Hazardous Item (for supporting safe storage configurations)[HI, WG] See Note 26	Initial Gen Assigned HWN [WG, PC] See Note 29	WIPP WSPF Approved HWN [WS, AK]
490	HEPA FILTERS AND CWS FILTERS (cont.) See Note 22	silver	7440-22-4	X	D011	D011
		tetrachloroethylene (perclene)	127-18-4	X	—	F001/F002
		toluene	108-88-3	X	—	F005
		trichloroethylene (TCE)	79-01-6	X	—	F001/F002
		xylene	1330-20-7	X	See Note 2	N/A
491	PLENUM PREFILTERS	1,1,1-trichloroethane (TCA)	71-55-6	X[(2)]	F001[(2, 108, 182, 183)] See Notes 4, 8, and 25	See Note 22
		1,1,2-trichloro-1,2,2-trifluoroethane	76-13-1	X	F002	
		carbon tetrachloride	56-23-5	X	F001	
		methylene chloride	75-09-2	X	F002	
696	CEMENTED INCINERATOR SLUDGE (Bldg 771 generated prior to March 21, 1987)	1,1,1-trichloroethane (TCA)	71-55-6	X[(16, 26, 72)]	—	F001/F002[(26, 95)]
		1,1,2-trichloro-1,2,2-trifluoroethane	76-13-1	X	—	F001/F002
		1-butanol	71-36-3	X	See Note 2	N/A
		acetone	67-64-1	X	—	N/A See Notes 1 and 2
		arsenic	7440-38-2	X	—	D004
		barium	7440-39-3	X	—	D005
		benzene	71-43-2	X	—	F005
		beryllium (not beryllium powder)	7440-41-7	X	—	N/A
		cadmium	7440-43-9	X	—	D006
		carbon disulfide	75-15-0	X	—	F005
		carbon tetrachloride	56-23-5	X	—	F001
		chloroform (trichloromethane)	67-66-3	X	—	D022
		chromium	7440-47-3	X	—	D007
		cyanide cleaning bath solutions	—	X	—	F009 See Note 11
		cyanide plating bath solutions	—	X	—	F007 See Note 11
		electroplating sludges	—	X	—	F006See Note 11
		lead	7439-92-1	X	—	D008
		mercury	7439-97-6	X	—	D009
		methanol	67-56-1	X	—	N/A See Notes 1 and 2
		methyl ethyl ketone (2-butanone)	78-93-3	X	—	F005
		methylene chloride	75-09-2	X	—	F002
		selenium	7782-49-2	X	—	D010

Table A-30. (cont.) RF

RF IDC Numeric Code	Waste Description	Constituent/Compound/Item	CAS	Potential Hazardous Constituent, Chemical Property, or Hazardous Item (for supporting safe storage configurations)[HI, WG] See Note 26	Initial Gen Assigned HWN [WG, PC] See Note 29	WIPP WSPF Approved HWN [WS, AK]
696	CEMENTED INCINERATOR SLUDGE (Bldg 771 generated prior to March 21, 1987) (cont.)	silver	7440-22-4	X	—	D011
		tetrachloroethylene (perclene)	127-18-4	X	—	F001/F002
		toluene	108-88-3	X	—	F005
		trichloroethylene (TCE)	79-01-6	X	—	F001/F002
		xylene	1330-20-7	X	—	N/A See Notes 1 and 2
697	DIRT	1,1,1-trichloroethane (TCA)	71-55-6	X[1, 2, 16]	F001[16]	—
		1,1,2-trichloro-1,2,2-trifluoroethane	76-13-1	X	F002	—
		acetone	67-64-1	X	—	—
		arsenic	7440-38-2	X	—	—
		barium	7440-39-3	X	—	—
		benzene	71-43-2	X	—	—
		1-butanol	71-36-3	X	—	—
		cadmium	7440-43-9	X	—	—
		carbon tetrachloride	56-23-5	X	F001	—
		chromium	7440-47-3	X	—	—
		cyanide	57-12-5	X	—	—
		cyanide cleaning bath solutions	—	X	—	—
		cyanide plating bath solutions	—	X	—	—
		electroplating sludges	—	X	—	—
		ethyl benzene	100-41-4	X	—	—
		lead	7439-92-1	X	—	—
		mercury	7439-97-6	X	—	—
		methanol	67-56-1	X	—	—
		methyl ethyl ketone (2-butanone)	78-93-3	X	—	—
		methylene chloride	75-09-2	X	F002	—
		nitrobenzene	98-95-3	X	—	—
		selenium	7782-49-2	X	—	—
		silver	7440-22-4	X	—	—
		tetrachloroethylene (perclene)	127-18-4	X	—	—
		toluene	108-88-3	X	—	—
		trichloroethylene (TCE)	79-01-6	X	—	—
		xylene	1330-20-7	X	—	—

Table A-30. (cont.) RF

RF IDC Numeric Code	Waste Description	Constituent/Compound/Item	CAS	Potential Hazardous Constituent, Chemical Property, or Hazardous Item (for supporting safe storage configurations)[HI, WG] See Note 26	Initial Gen Assigned HWN [WG, PC] See Note 29	WIPP WSPF Approved HWN [WS, AK]
700	OASIS WASTE	1,1,1-trichloroethane (TCA)	71-55-6	X [5, 8, 16 46, 47]	F001 [5]	F001/F002 [46, 47]
		1,1,2-trichloro-1,2,2-trifluoroethane	76-13-1	X	F002	F002
		1,2-dichloroethane	107-06-2	X	—	D028
		1,1-dichloroethylene	75-35-4	X	—	D029
		2,4-dinitrotoluene	121-14-2	X	—	D030
		2-ethoxyethanol	110-80-5	X	—	F005
		acetone	67-64-1	X	See Note 2	N/A
		benzene	71-43-2	X	—	F005
		carbon disulfide	75-15-0	X	—	F005
		carbon tetrachloride	56-23-5	X	F001	F001
		chloroform (trichloromethane)	67-66-3	X	D022	D022
		chlorobenzene	108-90-7	X	—	F002
		hexachlorobenzene	118-74-1	X	—	D032
		hexachloroethane	67-72-1	X	—	D034
		methanol	67-56-1	X	See Note 2	N/A
		methylene chloride	75-09-2	X	—	F002
		methyl ethyl ketone (2-butanone)	78-93-3	X	—	F005
		nitrobenzene	98-95-3	X	—	D036
		tetrachloroethylene (perclene)	127-18-4	X	—	F002
		trichloroethylene (TCE)	79-01-6	X	—	F002
		toluene	108-88-3	X	—	F005
		vinyl chloride	75-01-4	X	—	D043
		xylene	1330-20-7	X	F003 [5] See Note 2	N/A
741	PITS 11 & 12 FIRST STAGE SLUDGE	See RF-001	—	X [126] See RF-001	See RF-001	See RF-001
742	PITS 11 & 12 SECOND STAGE SLUDGE	See RF-002	—	X [126] See RF-002	See RF-002	See RF-002
743	PITS 11 & 12 ORGANIC SETUPS	See RF-003	—	X [126] See RF-003	See RF-003	See RF-003
		polychlorinated-biphenyls (PCBs)	1336-36-3	PCB [126]	See RF-003	See RF-003
744	PITS 11 & 12 SPECIAL SETUPS	See RF-004	—	X [126] See RF-004	See RF-004	See RF-004
745	PITS 11 & 12 EVAPORATOR SALTS	See RF-005	—	X [126] See RF-005	See RF-005	—
746	PITS 11 & 12 903 PAD OIL DRUMS	See SD-176		See SD-176	See SD-176	—
					N/A	—
747	RFP MISCELLANEOUS SLUDGE	See RF-823	—	X [126] See RF-823	See RF-823	—
					N/A	—

Table A-30. (cont.) RF

RF IDC Numeric Code	Waste Description	Constituent/Compound/Item	CAS	Potential Hazardous Constituent, Chemical Property, or Hazardous Item (for supporting safe storage configurations)[HI, WG] See Note 26	Initial Gen Assigned HWN [WG, PC] See Note 29	WIPP WSPF Approved HWN [WS, AK]
749	PITS 11 AND 12 SEWER SLUDGE	See RF-995	—	See RF-995	See RF-995	—
750	PITS 11 & 12 DEBRIS	See BN-510	—	X [126] See BN-510	See BN-510 See Notes 8 and 25 [108, 182, 183]	See Note 22
751	PITS 11 & 12 ROASTER OXIDE	See RF-751 (See Note 12)	—	See Note 12 [126]	See RF-751 (See Note 12)	—
752	PITS 11 & 12 DEBRIS WASTE FROM NON-RF FACILITIES	See SD-177[108]		See SD-177[108]	See SD-177[108]	—
753	PITS 11 & 12 LEGACY DIRT	See RF-990	—	See RF-990 [126]	See RF-990	—
		polychlorinated-biphenyls (PCBs)	1336-36-3	PCB [126]	N/A	—
760	RFP DEBRIS	See BN-510		X [126] See BN-510	See BN-510 See Notes 8 and 25 [108, 182, 183]	See Note 22
800	FIRST STAGE SLUDGE – CEMENTED	1,1,1-trichloroethane (TCA)	71-55-6	X [2, 8, 9, 16, 24, 57]	F001 [16]	F001/F002 [24, 57]
		1,1,2-trichloro-1,2,2-trifluoroethane	76-13-1	X	F002	F002
		1-butanol	71-36-3	X	See Note 2	N/A
		acetone	67-64-1	X	—	F003 See Note 2
		arsenic	7440-38-2	X	D004	D004
		barium	7440-39-3	X	D005	D005
		benzene	71-43-2	X	F005	F005
		beryllium (not beryllium powder)	7440-41-7	X	N/A	N/A
		cadmium	7440-43-9	X	D006	D006
		carbon tetrachloride	56-23-5	X	F001	F001
		chlorobenzene	108-90-7	X	—	F002
		chloroform (trichloromethane)	67-66-3	X	—	D022
		chromium	7440-47-3	X	D007	D007
		cyanide cleaning bath solutions	—	X	F009	F009
		cyanide plating bath solutions	—	X	F007	F007
		electroplating sludges	—	X	F006	F006
		ethyl benzene	100-41-4	X	See Note 2	N/A
		ethyl ether	60-29-7	X	See Note 2	N/A

Table A-30. (cont.) RF

RF IDC Numeric Code	Waste Description	Constituent/Compound/Item	CAS	Potential Hazardous Constituent, Chemical Property, or Hazardous Item (for supporting safe storage configurations)[HI, WG] See Note 26	Initial Gen Assigned HWN[WG, PC] See Note 29	WIPP WSPF Approved HWN[WS, AK]
800	FIRST STAGE SLUDGE – CEMENTED (cont.)	lead	7439-92-1	X	D008	D008
		mercury	7439-97-6	X	D009	D009
		methanol	67-56-1	X	—	F003 See Note 2
		methylene chloride	75-09-2	X	F002	F001/F002
		nitrate	—	X	See Note 2	N/A
		potential corrosives if liquids exceed the WIPP-WAC limit	—	X	D002	N/A
		selenium	7782-49-2	X	D010	D010
		silver	7440-22-4	X	D011	D011
		tetrachloroethylene (perclene)	127-18-4	X	F001	F001/F002
		toluene	108-88-3	X	—	F005
		trichloroethylene (TCE)	79-01-6	X	—	F001/F002
		xylene	1330-20-7	X	—	F003 See Note 2
801	SOLIDIFIED ORGANICS	1,1,1-trichloroethane (TCA)	71-55-6	X[(2, 8, 16 46, 47)]	F001[(16)]	F001/F002[(46, 47)]
		1,1,2-trichloro-1,2,2-trifluoroethane	76-13-1	X	F002	F002
		1,2-dichloroethane	107-06-2	X	D028	D028
		1,1-dichloroethylene	75-35-4	X	D029	D029
		2,4-dinitrotoluene	121-14-2	X	D030	D030
		acetone	67-64-1	X	F003 See Note 2	N/A
		carbon tetrachloride	56-23-5	X	F001	F001
		benzene	71-43-2	X	—	F005
		beryllium (not beryllium powder)	7440-41-7	X	N/A	N/A
		carbon disulfide	75-15-0	X	—	F005
		chloroform (trichloromethane)	67-66-3	X	D022	D022
		chlorobenzene	108-90-7	X	—	F002
		hexachlorobenzene	118-74-1	X	D032	D032
		hexachloroethane	67-72-1	X	D034	D034
		methanol	67-56-1	X	F003 See Note 2	N/A
		methylene chloride	75-09-2	X	F002	F002
		methyl ethyl ketone (2-butanone)	78-93-3	X	—	F005
		nitrobenzene	98-95-3	X	D036	D036
		tetrachloroethylene (perclene)	127-18-4	X	F002	F002
		toluene	108-88-3	X	—	F005
		trichloroethylene (TCE)	79-01-6	X	F002	F002

Table A-30. (cont.) RF

RF IDC Numeric Code	Waste Description	Constituent/Compound/Item	CAS	Potential Hazardous Constituent, Chemical Property, or Hazardous Item (for supporting safe storage configurations)[HI, WG] See Note 26	Initial Gen Assigned HWN [WG, PC] See Note 29	WIPP WSPF Approved HWN [WS, AK]
801	SOLIDIFIED ORGANICS (cont.)	vinyl chloride	75-01-4	X	D043	D043
		xylene	1330-20-7	X	F003 See Note 2	N/A
802	SOLIDIFIED LABORATORY WASTE	1,1,1-trichloroethane (TCA)	71-55-6	X[16, 45]	—	F001/F002[45]
		1,1,2-trichloro-1,2,2-trifluoroethane	76-13-1	X	—	F001/F002
		1,1-dichloroethylene	75-35-4	X	—	D029
		benzene	71-43-2	X	—	F005
		cadmium	7440-43-9	X	—	D006
		carbon tetrachloride	56-23-5	X	—	F001
		chromium	7440-47-3	X	—	D007
		cyanide	57-12-5	X	See Note 2	N/A
		cyclohexane (if waste contains free liquids)	110-82-7	X	See Note 2	N/A
		ethyl benzene	100-41-4	X	See Note 2	N/A
		lead	7439-92-1	X	—	D008
		methanol	67-56-1	X	See Note 2	N/A
		methylene chloride	75-09-2	X	—	F002
		methyl ethyl ketone (2-butanone)	78-93-3	X	—	F005
		silver	7440-22-4	X	—	D011
		tetrachloroethylene (perclene)	127-18-4	X	—	F001/F002
		toluene	108-88-3	X	—	F005
		trichloroethylene (TCE)	79-01-6	X	—	F001/F002
		xylene	1330-20-7	X	See Note 2	N/A
		cyanide cleaning bath solutions	—	X	—	F009
		cyanide plating bath solutions	—	X	—	F007
		electroplating sludges	—	X	—	F006
803	SOLIDIFIED DCP SLUDGE	1,1,1-trichloroethane (TCA)	71-55-6	X[2, 8, 16, 25]	F001[2]	F001[25]
		1,1,2,2-tetrachloroethane	79-34-5	X	—	N/A
		1,1,2-trichloro-1,2,2-trifluoroethane	76-13-1	X	F002	F001
		1-butanol	71-36-3	X	F003 See Note 2	N/A
		acetone	67-64-1	X	See Note 2	N/A
		benzene	71-43-2	X	—	F005
		beryllium (not beryllium powder)	7440-41-7	X	N/A	N/A
		1-butanol	71-36-3	X	See Note 2	N/A
		cadmium	7440-43-9	X	D006	D006

Table A-30. (cont.) RF

RF IDC Numeric Code	Waste Description	Constituent/Compound/Item	CAS	Potential Hazardous Constituent, Chemical Property, or Hazardous Item (for supporting safe storage configurations)[HI, WG] See Note 26	Initial Gen Assigned HWN [WG, PC] See Note 29	WIPP WSPF Approved HWN [WS, AK]
803	SOLIDIFIED DCP SLUDGE (cont.)	carbon tetrachloride	56-23-5	X	F001	F001
		chromium	7440-47-3	X	—	D007
		chloroform (trichloromethane)	67-66-3	X	See Note 2	N/A
		cyanide cleaning bath solutions	—	X	F009	F009
		cyanide plating bath solutions	—	X	F007	F007
		electroplating sludges	—	X	F006	F006
		ethyl benzene	100-41-4	X	F003 [(2)] See Note 2	N/A
		hexachlorobenzene	118-74-1	X	—	D032
		lead	7439-92-1	X	D008 [(2)]	D008
		mercury	7439-97-6	X	—	D009
		methanol	67-56-1	X	F003 [(2)] See Note 2	N/A
		methyl ethyl ketone (2-butanone)	78-93-3	X	—	F005
		methyl isobutyl ketone	108-10-1	X	See Note 2	N/A
		methylene chloride	75-09-2	X	F002 [(2)]	F002 [(25)]
		potential corrosives if liquids exceed the WIPP-WAC limit	—	X	D002	N/A
		selenium	7782-49-2	X	—	D010
		silver	7440-22-4	X	—	D011
		tetrachloroethylene (perclene)	127-18-4	X	—	F001
		toluene	108-88-3	X	F005	F005
		trichloroethylene (TCE)	79-01-6	X	—	F001/F002
		xylene	1330-20-7	X	F003 See Note 2	N/A
806	SOLIDIFIED PROCESS SOLIDS	1,1,1-trichloroethane (TCA)	71-55-6	X [(2, I6)]	F001/F002 [(2)]	—
		1,1,2-trichloro-1,2,2-trifluoroethane	76-13-1	X	F001/F002	—
		1-butanol	71-36-3	X	F003 [(2)] (See Note 2)	—
		acetone	67-64-1	X	F003 [(2)] (See Note 2)	—
		arsenic	7440-38-2	X	D004	—
		barium	7440-39-3	X	D005	—
		cadmium	7440-43-9	X	D006	—
		carbon tetrachloride	56-23-5	X	F001	—
		chromium	7440-47-3	X	D007	—
		lead	7439-92-1	X	D008	—

Table A-30. (cont.) RF

RF IDC Numeric Code	Waste Description	Constituent/Compound/Item	CAS	Potential Hazardous Constituent, Chemical Property, or Hazardous Item (for supporting safe storage configurations)[HI, WG] See Note 26	Initial Gen Assigned HWN[WG, PC] See Note 29	WIPP WSPF Approved HWN[WS, AK]
806	SOLIDIFIED PROCESS SOLIDS (cont.)	mercury	7439-97-6	X	D009	—
		methanol	67-56-1	X	F003 [(2)] (See Note 2)	—
		methylene chloride	75-09-2	X	F002	—
		methyl ethyl ketone (2-butanone)	78-93-3	X	F005	—
		selenium	7782-49-2	X	D010	—
		silver	7440-22-4	X	D011	—
		tetrachloroethylene (perclene)	127-18-4	X	F001/F002	—
		trichloroethylene (TCE)	79-01-6	X	F001/F002	—
		cyanide cleaning bath solutions	—	X	F009 (See Note 23)	—
		cyanide plating bath solutions	—	X	F007 (See Note 23)	—
		electroplating sludges	—	X	F006 (See Note 23)	—
		xylene	1330-20-7	X	F003 [(2)] (See Note 2)	N/A
807	BYPASS SLUDGE (After 3/21/87)	1,1,1-trichloroethane (TCA)	71-55-6	X [(2, 8, 16, 25)]	F001 [(2, 16)]	F001 [(25)]
		1,1,2,2-tetrachloroethane	79-34-5	X	N/A	N/A
		1,1,2-trichloro-1,2,2-trifluoroethane	76-13-1	X	F002	F001
		trans-1,3-dichloropropene	542-75-6	X	N/A	N/A
		1-butanol	71-36-3	X	F003 See Note 2	N/A
		acetone	67-64-1	X	See Note 2	N/A
		benzene	71-43-2	X	—	F005
		beryllium (not beryllium powder)	7440-41-7	X	N/A	N/A
		cadmium	7440-43-9	X	D006	D006
		carbon tetrachloride	56-23-5	X	F001	F001
		chromium	7440-47-3	X	—	D007
		cyanide	57-12-5	X	See Note 2	N/A
		cyanide cleaning bath solutions	—	X	F009	F009
		cyanide plating bath solutions	—	X	F007	F007
		electroplating sludges	—	X	F006	F006
		ethyl benzene	100-41-4	X	F003 See Note 2	N/A
		hexachlorobenzene	118-74-1	X	—	D032
		lead	7439-92-1	X	D008	D008
		mercury	7439-97-6	X	—	D009
		methanol	67-56-1	X	F003 See Note 2	N/A
		methyl ethyl ketone (2-butanone)	78-93-3	X	—	F005
		methyl isobutyl ketone	108-10-1	X	See Note 2	N/A

Table A-30. (cont.) RF

RF IDC Numeric Code	Waste Description	Constituent/Compound/Item	CAS	Potential Hazardous Constituent, Chemical Property, or Hazardous Item (for supporting safe storage configurations)[HI, WG] See Note 26	Initial Gen Assigned HWN[WG, PC] See Note 29	WIPP WSPF Approved HWN[WS, AK]
807	BYPASS SLUDGE (After 3/21/87) (cont.)	methylene chloride	75-09-2	X	F002	F002
		selenium	7782-49-2	X	—	D010
		silver	7440-22-4	X	—	D011
		tetrachloroethylene (perclene)	127-18-4	X	F001	F001
		toluene	108-88-3	X	F005	F005
		trichloroethylene (TCE)	79-01-6	X	—	F001/F002
		xylene	1330-20-7	X	F003 See Note 2	N/A
817	CEMENTED SS AND C HEELS	See RF-393	7440-47-3	X[8, 16]	See RF-393[8, 16]	See RF-393
		nitrates	—	X	—	N/A
		1,1,1-trichloroethane (TCA)	71-55-6	X[8, 16, 95]	F001[16]	F001/F002[95]
		1,1,2-trichloro-1,2,2-trifluoroethane	76-13-1	X	F002[16]	F001/F002
		1-butanol	71-36-3	X	See Note 2	N/A
		acetone	67-64-1	X	See Note 2	N/A
		benzene	71-43-2	X	—	F005
		arsenic	7440-38-2	X	—	D004
		barium	7440-39-3	X	—	D005
		beryllium (not beryllium powder)	7440-41-7	X	—	N/A
		cadmium	7440-43-9	X	—	D006
		carbon disulfide	75-15-0	X	—	F005
		carbon tetrachloride	56-23-5	X	F001	F001
818	CEMENTED INCINERATOR ASH	chromium	7440-47-3	X	—	D007
		lead	7439-92-1	X	D008	D008
		mercury	7439-97-6	X	—	D009
		methyl ethyl ketone (2-butanone)	78-93-3	X	—	F005
		methanol	67-56-1	X	See Note 2	N/A
		methylene chloride	75-09-2	X	F002	F002
		selenium	7782-49-2	X	—	D010
		silver	7440-22-4	X	—	D011
		tetrachloroethylene (perclene)	127-18-4	X	—	F001/F002
		toluene	108-88-3	X	—	F005[95]
		trichloroethylene (TCE)	79-01-6	X	—	F001/F002
		xylene	1330-20-7	X	See Note 2	N/A

Table A-30. (cont.) RF

RF IDC Numeric Code	Waste Description	Constituent/Compound/Item	CAS	Potential Hazardous Constituent, Chemical Property, or Hazardous Item (for supporting safe storage configurations)[HI, WG] See Note 26	Initial Gen Assigned HWN [WG, PC] See Note 29	WIPP WSPF Approved HWN [WS, AK]
820	CEMENTED SOOT	1,1,1-trichloroethane (TCA)	71-55-6	X[8, 16, 95]	F001[16]	F001/F002[95]
		1,1,2-trichloro-1,2,2-trifluoroethane	76-13-1	X	F002	F001/F002
		1-butanol	71-36-3	X	See Note 2	N/A
		acetone	67-64-1	X	See Note 2	N/A
		arsenic	7440-38-2	X	D004	D004
		barium	7440-39-3	X	D005	D005
		benzene	71-43-2	X	—	F005
		beryllium (not beryllium powder)	7440-41-7	X	N/A	N/A
		cadmium	7440-43-9	X	D006	D006
		carbon disulfide	75-15-0	X	—	F005
		carbon tetrachloride	56-23-5	X	F001	F005
		chromium	7440-47-3	X	D007	D007
		lead	7439-92-1	X	D008	D008
		mercury	7439-97-6	X	D009	D009
		methanol	67-56-1	X	See Note 2	N/A
		methyl ethyl ketone (2-butanone)	78-93-3	X	—	F005
		methylene chloride	75-09-2	X	F002	F002
		selenium	7782-49-2	X	D010	D010
		silver	7440-22-4	X	D011	D011
		tetrachloroethylene (perclene)	127-18-4	X	—	F001/F002
		toluene	108-88-3	X	—	F005
		trichloroethylene (TCE)	79-01-6	X	—	F001/F002
		xylene	1330-20-7	X	See Note 2	N/A
822	CEMENTED RESINS	See RF-432	67-66-3	X[19, 43]	See RF-432	—
823	CEMENTED MISCELLANEOUS SLUDGE	1,1,1-trichloroethane (TCA)	71-55-6	X[8, 16]	F001/F002[8, 16]	—
		1,1,2-trichloro-1,2,2-trifluoroethane	76-13-1	X	F001/F002	—
		acetone	67-64-1	X	F003 (See Note 2)	—
		arsenic	7440-38-2	X	D004	—
		barium	7440-39-3	X	D005	—
		cadmium	7440-43-9	X	D006	—
		carbon tetrachloride	56-23-5	X	F001	—
		chromium	7440-47-3	X	D007	—
		lead	7439-92-1	X	D008	—
		mercury	7439-97-6	X	D009	—

Table A-30. (cont.) RF

RF IDC Numeric Code	Waste Description	Constituent/Compound/Item	CAS	Potential Hazardous Constituent, Chemical Property, or Hazardous Item (for supporting safe storage configurations)[HI, WG] See Note 26	Initial Gen Assigned HWN [WG, PC] See Note 29	WIPP WSPF Approved HWN [WS, AK]
823	CEMENTED MISCELLANEOUS SLUDGE (cont.)	methanol	67-56-1	X	F003 (See Note 2)	—
		methyl ethyl ketone (2-butanone)	78-93-3	X	F005	—
		methylene chloride	75-09-2	X	F002	—
		selenium	7782-49-2	X	D010	—
		silver	7440-22-4	X	D011	—
		tetrachloroethylene (perclene)	127-18-4	X	F001/F002	—
		trichloroethylene (TCE)	79-01-6	X	F001/F002	—
		cyanide cleaning bath solutions	—	X	F009 (See Note 23)	—
		cyanide plating bath solutions	—	X	F007 (See Note 23)	—
		electroplating sludges	—	X	F006 (See Note 23)	—
		xylene	1330-20-7	X	F003 (See Note 2)	—
831	DRY COMBUSTIBLES	1,1,1-trichloroethane (TCA)	71-55-6	X[2, 8]	F001[2, 8, 108, 182, 183] See Notes 4, 8, and 25	See Note 22
		1,1,2-trichloro-1,2,2-trifluoroethane	76-13-1	X	F002	
		1,1-dichloroethylene	75-35-4	X	—	
		carbon tetrachloride	56-23-5	X	F001	
		cyclohexane	110-82-7	X	—	
		ethyl benzene	100-41-4	X	—	
		methylene chloride	75-09-2	X	F002	
		toluene	108-88-3	X	—	
		xylene	1330-20-7	X	—	
832	WET COMBUSTIBLES	1,1,1-trichloroethane (TCA)	71-55-6	X[2, 8]	F001[2, 8, 108, 182, 183] See Notes 4, 8, and 25	See Note 22
		1,1,2,2-tetrachloroethane	79-34-5	X	—	
		1,1,2-trichloro-1,2,2-trifluoroethane	76-13-1	X	F002	
		1,2,4-trimethylbenzene	95-63-6	X	—	
		benzene	71-43-2	X	—	
		carbon tetrachloride	56-23-5	X	F001	
		chloroform (trichloromethane)	67-66-3	X	—	
		cyclohexane	110-82-7	X	—	
		ethyl benzene	100-41-4	X	—	
		methane	74-82-8	X	—	
		methylene chloride	75-09-2	X	F002	
		toluene	108-88-3	X	—	

Table A-30. (cont.) RF

RF IDC Numeric Code	Waste Description	Constituent/Compound/Item	CAS	Potential Hazardous Constituent, Chemical Property, or Hazardous Item (for supporting safe storage configurations)[HI, WG] See Note 26	Initial Gen Assigned HWN [WG, PC] See Note 29	WIPP WSPF Approved HWN [WS, AK]
832	WET COMBUSTIBLES (cont.)	xylene	1330-20-7	X	—	See Note 22
833	PLASTICS, TRU MIXED	1,1,1-trichloroethane (TCA)	71-55-6	X[2, 8]	F001[2, 8, 108, 182, 183] See Notes 4, 8, and 25	See Note 22
		1,1,2-trichloro-1,2,2-trifluoroethane	76-13-1	X	F002[2]	
		carbon tetrachloride	56-23-5	X	F001	
		Chloroform (trichloromethane)	67-66-3	X	—	
		cyclohexane	110-82-7	X	—	
		methylene chloride	75-09-2	X	F002	
		toluene	108-88-3	X	—	
		trichloroethylene (TCE)	79-01-6	X	—	
		xylene	1330-20-7	X	—	
900	LSA PAPER, PLASTIC, ETC.	1,1,1-trichloroethane (TCA)	71-55-6	X[5, 6, 16]	F001 See Notes 4, 8, and 25 (108, 182, 183)	See Note 22
		1,1,2-trichloro-1,2,2-trifluoroethane	76-13-1	X	F002	
		1,1-dichloroethylene	75-35-4	X	—	
		arsenic	7440-38-2	X	—	
		barium	7440-39-3	X	—	
		cadmium	7440-43-9	X	—	
		carbon tetrachloride	56-23-5	X	F001	
		chromium	7440-47-3	X	—	
		lead	7439-92-1	X	D008	
		mercury	7439-97-6	X	—	
		methyl ethyl ketone (2-butanone)	78-93-3	X	—	
		methylene chloride	75-09-2	X	F002	
		selenium	7782-49-2	X	—	
		silver	7440-22-4	X	—	
		tetrachloroethylene (perclene)	127-18-4	X	—	
		toluene	108-88-3	X	—	
		trichloroethylene (TCE)	79-01-6	X	F001	
		xylene	1330-20-7	X	F003 See Note 2	

Table A-30. (cont.) RF

RF IDC Numeric Code	Waste Description	Constituent/Compound/Item	CAS	Potential Hazardous Constituent, Chemical Property, or Hazardous Item (for supporting safe storage configurations)[HI, WG] See Note 26	Initial Gen Assigned HWN [WG, PC] See Note 29	WIPP WSPF Approved HWN [WS, AK]
950	LSA METAL, GLASS, ETC.	(see RF-440)	(see RF-440)	(see RF-440) [1, 4, 5, 16, 67]	(see RF-440) See Notes 8 and 25 [108, 182, 183]	See Note 22
		aerosol cans	—	See Notes 8 and 25 [108]	See Notes 8 and 25 [108, 182, 183]	
960	CONCRETE, ASPHALT, ETC.	(see RF-371 and 374) [5]	(see RF-371 and 374) [5]	(see RF-371 and 374) [5]	(see RF-371 and 374) [5, 16, 108]	See Note 22
		aerosol cans	—	See Notes 8 and 25 [108, 182, 183]	See Notes 8 and 25 [108, 182, 183]	
970	WOOD	1,1,1-trichloroethane (TCA)	71-55-6	X [1, 5, 6, 16, 67]	F001 See Notes 4, 8, 25 [108, 182, 183]	See Note 22
		1,1,2-trichloro-1,2,2-trifluoroethane	76-13-1	X	F002	
		carbon tetrachloride	56-23-5	X	F001	
		lead	7439-92-1	X	D008	
		methyl ethyl ketone (2-butanone)	78-93-3	X	—	
		methylene chloride	75-09-2	X	F002	
		polychlorinated-biphenyls (ballast found in LLW box)	1336-36-3	X	—	
		tetrachloroethylene (perclene)	127-18-4	X	—	
		toluene	108-88-3	X	—	
		trichloroethylene (TCE)	79-01-6	X	F001	
		xylene	1330-20-7	X	F003 See Note 2	
976	BUILDING 776 PROCESS SLUDGE	1,1,1-trichloroethane (TCA)	71-55-6	X [1, 5]	F001/F002	—
		1,1,2-trichloro-1,2,2-trifluoroethane	76-13-1	X	F001/F002	—
		1,2-dichloroethylene	540-59-0	X	D028	—
		1-butanol	71-36-3	X	F003 (See Note 2)	—
		cadmium	7440-43-9	X	D006	—
		carbon tetrachloride	56-23-5	X	F001	—
		chloroform (trichloromethane)	67-66-3	X	D022	—
		chromium	7440-47-3	X	D007	—
		lead	7439-92-1	X	D008	—
		mercury	7439-97-6	X	D009	—
		methanol	67-56-1	X	F003 (See Note 2)	—
		methylene chloride	75-09-2	X	F002	—

Table A-30. (cont.) RF

RF IDC Numeric Code	Waste Description	Constituent/Compound/Item	CAS	Potential Hazardous Constituent, Chemical Property, or Hazardous Item (for supporting safe storage configurations)[HI, WG] See Note 26	Initial Gen Assigned HWN [WG, PC] See Note 29	WIPP WSPF Approved HWN [WS, AK]
976	BUILDING 776 PROCESS SLUDGE (cont.)	tetrachloroethylene (perclene)	127-18-4	X	F001	—
		trans-1,2-dichloroethylene	156-60-5	X	—	—
		trichloroethylene (TCE)	79-01-6	X	F001	—
		xylene	1330-20-7	X	F003 (See Note 2)	—
978	LAUNDRY SLUDGE	1,1,1-trichloroethane (TCA)	71-55-6	X [(5)]	F001/F002 [(193)]	—
		1,1,2-trichloro-1,2,2-trifluoroethane	76-13-1	X	F001/F002	—
		1-butanol	71-36-3	X	F003 (See Note 2)	—
		beryllium (not beryllium powder)	7440-41-7	X	—	—
		cadmium	7440-43-9	X	D006	—
		carbon tetrachloride	56-23-5	X	F001	—
		chromium	7440-47-3	X	D006	—
		lead	7439-92-1	X	D008	—
		mercury	7439-97-6	X	D009	—
		methanol	67-56-1	X	F003 (See Note 2)	—
		methylene chloride	75-09-2	X	F002	—
		tetrachloroethylene (perclene)	127-18-4	X	F001/F002	—
		trichloroethylene (TCE)	79-01-6	X	F001/F002	—
		xylene	1330-20-7	X	F003 (See Note 2)	—
980	EQUIPMENT	1,1,1-trichloroethane (TCA)	71-55-6	X [(1, 5)]	—	—
		1,1,2-trichloro-1,2,2-trifluoroethane	76-13-1	X	—	—
		carbon tetrachloride	56-23-5	X	—	—
		lead	7439-92-1	X	—	—
		methylene chloride	75-09-2	X	—	—
990	DIRT	1,1,1-trichloroethane (TCA)	71-55-6	X [(1, 5)]	—	—
		1,1,2-trichloro-1,2,2-trifluoroethane	76-13-1	X	—	—
		1-butanol	71-36-3	X	—	—
		aerosol cans	—	—	See Notes 8 and 25 [(108)]	—
		carbon tetrachloride	56-23-5	X	—	—
		methanol	67-56-1	X	See Note 2	—
		methylene chloride	75-09-2	X	—	—
		nitrobenzene	98-95-3	X	—	—
		nitrates	—	X	—	—
		tetrachloroethylene (perclene)	127-18-4	X	—	—
		trichloroethylene (TCE)	79-01-6	X	—	—

Table A-30. (cont.) RF

RF IDC Numeric Code	Waste Description	Constituent/Compound/Item	CAS	Potential Hazardous Constituent, Chemical Property, or Hazardous Item (for supporting safe storage configurations)[HI, WG] See Note 26	Initial Gen Assigned HWN [WG, PC] See Note 29	WIPP WSPF Approved HWN [WS, AK]
990	DIRT (cont.)	xylene	1330-20-7	X	—	—
995	SEWER SLUDGE	None [(158)]		—	None [(158)]	—
998	PITS 11 & 12 CARGOS AND BINS (WITHOUT ROASTER OXIDE)	polychlorinated-biphenyls (PCBs)	1336-36-3	PCB See Notes 10 and 13 [(126)]	See Notes 10 and 13	—
999	PITS 11 & 12 CARGOS AND BINS WITH ROASTER OXIDE	polychlorinated-biphenyls (PCBs)	1336-36-3	PCB See Notes 10 and 13 [(126)]	See Notes 10 and 13	—

Table A-31. Hanford (RL) hazardous constituents, chemical properties, or hazardous items identified in TRU waste.

RL IDC Numeric Code	Waste Description	Constituent/Compound/Item	CAS	Potential Hazardous Constituent, Chemical Property, or Hazardous Item (for supporting safe storage configurations) [HI, WG] See Note 26	Initial Gen Assigned HWN [WG, PC] See Note 29	WIPP WSPF Approved HWN [WS, AK]
712	HANFORD PLUTONIUM FINISHING PLANT DEBRIS (i.e., MFPDD)	arsenic	7440-38-2	X [97, 116]	D004 [97, 116]	See Note 22
		barium	7440-39-3	X	D005	
		cadmium	7440-43-9	X	D006	
		chromium	7440-47-3	X	D007	
		lead	7439-92-1	X	D008	
		mercury	7439-97-6	X	D009	
		selenium	7782-49-2	X	D010	
		silver	7440-22-4	X	D011	
		chloroform (trichloromethane)	67-66-3	X	D022	
		2,4-dinitrotoluene	121-14-2	X	D030	
		carbon tetrachloride	56-23-5	X	F001	
		1,1,1-trichloroethane (TCA)	71-55-6	X	F001/F002	
		1,1,2-trichloro-1,2,2-trifluoroethane	76-13-1	X	F001/F002	
		methylene chloride	75-09-2	X	F001/F002	
		tetrachloroethylene (perclene)	127-18-4	X	F001/F002	
		trichlorofluoromethane	75-69-4	X	F001/F002	
		trichloroethylene (TCE)	79-01-6	X	F001/F002	
		nitrobenzene	98-95-3	X	F004	
		benzene	71-43-2	X	F005	
		carbon disulfide	75-15-0	X	F005	
		pyridine	110-86-1	X	F005	
		methyl ethyl ketone (2-butanone)	78-93-3	X	F005	
		toluene	108-88-3	X	F005	
714	HANFORD RADIOCHEMICAL PROCESSING LAB 325 BLDG DEBRIS (i.e., RLM325D.001)	arsenic	7440-38-2	X [97, 117]	D004 [97, 117]	See Note 22
		barium	7440-39-3	X	D005	
		cadmium	7440-43-9	X	D006	
		chromium	7440-47-3	X	D007	
		lead	7439-92-1	X	D008	
		mercury	7439-97-6	X	D009	
		selenium	7782-49-2	X	D010	
		silver	7440-22-4	X	D011	
		chloroform (trichloromethane)	67-66-3	X	D022	
		1,4-dichlorobenzene	106-46-7	X	D027	
		1,2-dichloroethane	107-06-2	X	D028	

Table A-31. (cont.) RL

RL IDC Numeric Code	Waste Description	Constituent/Compound/Item	CAS	Potential Hazardous Constituent, Chemical Property, or Hazardous Item (for supporting safe storage configurations)[HI, WG] See Note 26	Initial Gen Assigned HWN[WG, PC] See Note 29	WIPP WSPF Approved HWN[WS, AK]
714	HANFORD RADIOCHEMICAL PROCESSING LAB 325 BLDG DEBRIS (i.e., RLM325D.001; cont.)	1,2-dichlorobenzene	95-50-1	X	F002	See Note 22
		1,1-dichloroethylene	75-35-4	X	D029	
		2,4-dinitrotoluene	121-14-2	X	D030	
		hexachloroethane	67-72-1	X	D034	
		pentachlorophenol	87-86-5	X	D037	
		vinyl chloride	75-01-4	X	D043	
		carbon tetrachloride	56-23-5	X	F001	
		1,1,1-trichloroethane (TCA)	71-55-6	X	F001/F002	
		1,1,2-trichloro-1,2,2-trifluoroethane	76-13-1	X	F001/F002	
		1,1,2,2-tetrachloro-1,2-difluoroethane	79-34-5	X	F001	
		methylene chloride	75-09-2	X	F001/F002	
		tetrachloroethylene (perclene)	127-18-4	X	F001/F002	
		chlorobenzene	108-90-7	X	F002	
		cresol	1319-77-3	X	F004	
		nitrobenzene	98-95-3	X	F004	
		2-nitropropane	79-46-9	X	F005	
		benzene	71-43-2	X	F005	
		Isobutyl alcohol (isobutanol)	78-83-1	X	F005	
		methyl ethyl ketone (2-butanone)	78-93-3	X	F005	
		pyridine	110-86-1	X	F005	
		toluene	108-88-3	X	F005	
715	HANFORD HOMOGENEOUS SOLID WASTE	See Note 9 and 15 (132)		See Note 9 (132)	See Note 15 (132)	—

Table A-31. (cont.) RL

RL IDC Numeric Code	Waste Description	Constituent/Compound/Item	CAS	Potential Hazardous Constituent, Chemical Property, or Hazardous Item (for supporting safe storage configurations)[HI, WG] See Note 26	Initial Gen Assigned HWN[WG, PC] See Note 29	WIPP WSPF Approved HWN[WS, AK]
716	HANFORD 231-Z BUILDING DEBRIS (i.e., RLM321ZD.001)	See Note 9 and 15[97, 118]		See Note 9 and 15[97, 118]	See Note 9 and 15[97, 118]	See Note 22
		cadmium	7440-43-9	X	D006	
		chromium	7440-47-3	X	D007	
		lead	7439-92-1	X	D008	
		mercury	7439-97-6	X	D009	
		carbon tetrachloride	56-23-5	X	F001	
		1,1,1-trichloroethane (TCA)	71-55-6	X	F001/F002	
		1,1,2-trichloro-1,2,2-trifluoroethane	76-13-1	X	F001/F002	
		methylene chloride	75-09-2	X	F001/F002	
		tetrachloroethylene (perclene)	127-18-4	X	F001/F002	
		trichloroethylene (TCE)	79-01-6	X	F001/F002	
		benzene	71-43-2	X	F005	
		carbon disulfide	75-15-0	X	F005	
		methyl ethyl ketone (2-butanone)	78-93-3	X	F005	
720	HANFORD KE BASIN NORTH LOADOUT PIT SLUDGE	See Note 9 and 15[133]		See Note 9[133]	See Note 15[133]	—

Table A-32. INL – Subsurface Disposal Area (SD) hazardous constituents, chemical properties, or hazardous items identified in TRU waste.

SD IDC Numeric Code	Waste Description	Constituent/Compound/Item	CAS	Potential Hazardous Constituent, Chemical Property, or Hazardous Item (for supporting safe storage configurations)[HI, WG] See Note 26	Initial Gen Assigned HWN [WG, PC] See Note 29	WIPP WSPF Approved HWN [WS, AK]
176	PRE-1980 INL-EXHUMED SDA HOMOGENEOUS SOLIDS	arsenic	7440-38-2	X [51, 159]	D004 [51, 159]	—
		barium	7440-39-3	X	D005	—
		cadmium	7440-43-9	X	D006	—
		chromium	7440-47-3	X	D007	—
		lead	7439-92-1	X	D008	—
		mercury	7439-97-6	X	D009	—
		selenium	7782-49-2	X	D010	—
		silver	7440-22-4	X	D011	—
		chloroform	67-66-3	X	D022	—
		1,4-dichlorobenzene	106-46-7	X	D027	—
		1,2-dichloroethane	107-06-2	X	D028	—
		1,1-dichloroethylene	75-35-4	X	D029	—
		2,4-dinitrotoluene	121-14-2	X	D030	—
		hexachlorobenzene	118-74-1	X	D032	—
		hexachlorobutadiene	87-68-3	X	D033	—
		hexachloroethane	67-72-1	X	D034	—
		pentachlorophenol	87-86-5	X	D037	—
		vinyl chloride	75-01-4	X	D043	—
		carbon tetrachloride	56-23-5	X	F001	—
		carbon disulfide	75-15-0	X	F005	—
		methylene chloride	75-09-2	X	F001/F002	—
		tetrachloroethylene (perclene)	127-18-4	X	F001/F002	—
		1,1,1-trichloroethane (TCA)	71-55-6	X	F001/F002	—
		trichloroethylene	79-01-6	X	F001/F002	—
		trichlorofluoromethane	75-69-4	X	F001/F002	—
		1,1,2-trichloro-1,2,2-trifluoroethane	76-13-1	X	F001/F002	—
		chlorobenzene	108-90-7	X	F002	—
		1,2-dichlorobenzene	95-50-1	X	F002	—
		1,1,2-trichloroethane	79-00-5	X	F002	—
		acetone	67-64-1	X	F003 See Note 2	—
		1-butanol	71-36-3	X	F003 See Note 2	—
		ethanol	64-17-5	X	See Note 2	—
		ethyl acetate	141-78-6	X	F003 See Note 2	—
		ethyl benzene	100-41-4	X	F003 See Note 2	—

Table A-32. (cont.) SD

SD IDC Numeric Code	Waste Description	Constituent/Compound/Item	CAS	Potential Hazardous Constituent, Chemical Property, or Hazardous Item (for supporting safe storage configurations)[HI, WG] See Note 26	Initial Gen Assigned HWN [WG, PC] See Note 29	WIPP WSPF Approved HWN [WS, AK]
176	PRE-1980 INL-EXHUMED SDA HOMOGENEOUS SOLIDS (cont.)	ethyl ether	60-29-7	X	F003 See Note 2	—
		methanol	67-56-1	X	F003 See Note 2	—
		methyl isobutyl ketone	108-10-1	X	F003 See Note 2	—
		xylene	1330-20-7	X	F003 See Note 2	—
		cresol	1319-77-3	X	F004	—
		nitrobenzene	98-95-3	X	F004	—
		benzene	71-43-2	X	F005	—
		isobutanol	78-83-1	X	F005	—
		2-ethoxyethanol	110-80-5	X	F005	—
		methyl ethyl ketone (2-butanone)	78-93-3	X	F005	—
		2-nitropropane	79-46-9	X	F005	—
		pyridine	110-86-1	X	F005	—
		toluene	108-88-3	X	F005	—
		electroplating sludges	—	X	F006	—
		cyanide plating bath solutions	—	X	F007	—
		stripping and cleaning bath solutions cyanide electroplating	—	X	F009	—
		polychlorinated-biphenyls (PCBs)	1336-36-3	PCBs (SD-176 and SD-178 only)	N/A	—
177	PRE-1980 INL-EXHUMED SDA HETEROGENEOUS DEBRIS	See SD-176 [159]		See SD-176 [159]	See SD-176 [159]	See Note 22
178	PRE-1980 INL-EXHUMED SDA SOIL	See SD-176 [159]		See SD-176 [159]	See SD-176 [159]	—
		polychlorinated-biphenyls (PCBs)	1336-36-3	PCB	N/A	—
179	PRE-1980 INL-EXHUMED SDA WASTE RETRIEVAL CONTAINERS See Note 14	See SD-176 [74, 159]		See SD-176 [74, 159]	See SD-176 [74, 159]	—
703	SDA WASTE CONTAINING NITRATE SALT	See Notes 9, 15, and 16 [51]		See Note 9 [51	See Note 15 [51	—
704	SDA HOMOGENEOUS SOLIDS	See Notes 9, 15, and 16 [51]		See Note 9 [51]	See Note 15 [51]	—
705	SDA HETEROGENEOUS DEBRIS	See Notes 9, 15, and 16 [51]		See Note 9 [51]	See Note 15 [51]	—
706	SDA SOIL	See Notes 9, 15, and 16 [51]		See Note 9 [51]	See Note 15 [51]	—

Table A-33. Sandia National Laboratory – East (SL) hazardous constituents, chemical properties, or hazardous items identified in TRU waste.

SL IDC Numeric Code	Waste Description	Constituent/Compound/Item	CAS	Potential Hazardous Constituent, Chemical Property, or Hazardous Item (for supporting safe storage configurations)[HI, WG] See Note 26	Initial Gen Assigned HWN [WG, PC] See Note 29	WIPP WSPF Approved HWN [WS, AK]
223	SNL LRRI HETEROGENEOUS DEBRIS	See Note 9 and 15 [138]		See Note 9 [138]	See Note 15 [138]	—
224	SNL HFC HETEROGENEOUS DEBRIS	See Note 9 and 15 [139]		See Note 9 [139]	See Note 15 [139]	—
227	SANDIA SOURCES	See Note 9 and 15 [140]		See Note 9 [140]	See Note 15 [140]	—

Table A-34. Hazardous constituents, chemical properties, or hazardous items identified in Savannah River Site (SR) TRU waste.

SR IDC Numeric Code	Waste Description	Constituent/Compound/Item	CAS	Potential Hazardous Constituent, Chemical Property, or Hazardous Item (for supporting safe storage configurations)[HI, WG] See Note 26	Initial Gen Assigned HWN [WG, PC] See Note 29	WIPP WSPF Approved HWN [WS, AK]
251	SRS BARNWELL SOLIDIFIED INORGANIC WASTE	See Note 9 and 15 [135]		See Note 9 [135]	See Note 15 [135]	—
252	SRS F-CANYON AND FB-LINE ABSORBED WASTES	See Note 9 and 15 [136]		See Note 9 [136]	See Note 15 [136]	—
253	SRS MOUND SITE INORGANIC PARTICULATES	See Note 9 and 15 [137]		See Note 9 [137]	See Note 15 [137]	—
255	SRS INORGANIC SLUDGE FROM 235F	(See Notes 9 and 15) [174, 180]		See Notes 9 [174, 180]	See Note 15 [174, 180]	—
256	SRS INORGANIC PARTICULATES FROM 221H	(See Notes 9 and 15) [175]		See Notes 9 [175]	See Note 15 [175]	—
257	SRS SOLIDIFIED INORGANICS FROM 773A	(See Notes 9 and 15) [167, 168]		See Notes 9 [167, 168]	See Note 15 [167, 168]	—
258	SRS SOLIDIFIED ORGANICS FROM 211F	(See Notes 9 and 15) [170]		See Notes 9 [170]	See Note 15 [170]	—
259	SRS SOLIDIFIED INORGANICS FROM 211F	(See Notes 9 and 15) ([171])		See Notes 9 [171]	See Note 15 [171]	—
260	SRS SOLIDIFIED ORGANICS FROM 321M	(See Notes 9 and 15) [173, 176]		See Notes 9 [173, 176]	See Note 15 [173, 176]	—
261	BCLDP ABSORBED HYDRAULIC SLUDGE FROM JN-1	(See Notes 9 and 15) [169, 179]		See Notes 9 [169, 179]	See Note 15 [169, 179]	—
835	SRS HIGH LEVEL CAUSTIC	See Note 9 and 15 [134]		See Note 9 [134]	See Note 15 [134]	—
842	SRS MOUND SITE SOIL/DEBRIS	See Note 9 and 15 [148]		See Note 9 [148]	See Note 15 [148]	—

Table A-35. Notes applicable to Tables A-1 through A-34.

NOTES

NOTE 1: *The 3100 m^3 Project conservatively assigned the F003 HWN to RF-292 and RF-696 within the WIPP-approved 3,100 m^3 Project WSP for this waste stream (i.e., ININW222). All HWNs previously assigned that are associated with the corrosivity (i.e., D002) and/or ignitability (i.e., D001/F003) characteristics will not exhibit that characteristic at the time of shipment to WIPP.*

NOTE 2: *A potential WIPP-prohibited characteristic HWN is associated with the hazardous constituent. The constituent was identified through historical generator information.*

NOTE 3: *Containers of waste remaining in storage at the TSA that have excess liquids will retain the applicable characteristic code (as indicated) until the waste no longer exhibits that characteristic.*

NOTE 4: *General statement within AK records reflects that the waste may contain a constituent associated with F001, F002, or F005 (i.e., specific contaminant may not be identified).*

NOTE 5: *Waste is subject to periodic change due to routine receipt of off-site waste. See off-site waste program waste profile and AMWTP HWDs for current list of HWNs. Applicable WIPP HWNs and hazardous constituents will be determined at the time of WIPP profiling.*

NOTE 6: *These HWNs do not apply to this IDC; however, because the F006, F007, and F009 HWNs do apply to RF-376 and RF-490 filters and these wastes are included in BN211 approved WSPF, all filters shipped under the approved BN211 WSPF are assigned the F006, F007, and F009 HWNs at the time of shipment.*

NOTE 7: *The waste was previously profiled by CCP and is Supercompactor feedstock. See also the applicable CCP WSPF.*

NOTE 8: *According to AK documentation the original generator did not assign a D001 or D003 HWN (i.e., the waste was not classified by the generator as an ignitable or reactive waste).*

NOTE 9: *The constituents associated with AMWTP storage requirements are identified in the AMWTP off-site waste profile supporting documentation.*

NOTE 10: *This is an IDC assigned to the overpack containers (i.e., bins/cargo containers only) and is used to support AMWTP operations. The IDC reflects that the overpack containers include inner containers of legacy debris and non-debris wastes that have a high or low probability of roaster oxide (RF-999 [roaster oxide designator] and RF-998 roaster oxide not designated). The inner containers were retrieved from the INL SDA pits 11 and 12 during the timeframe 1974–1979. The inner waste containers may contain a variety of waste IDCs (e.g., RF-741, RF-742, RF-743, RF-744, RF-745, RF-750, and RF-751).*

NOTE 11: *This HWN was assigned by the INL 3,100 m^3 Project due to the presence of Ful-Flo filters within RF-292.*

NOTE 12: *Roaster oxide has been determined to be non-hazardous if at the time of retrieval the container is intact. If the container is breached an evaluation of applicable EPA HWNs will be performed. HWNs will be assigned to breached containers on a case-by-case basis and will be based on the type and source of waste within close proximity of the parent container.*[73]

NOTE 13: *The IDC is not to be used for characterization. The IDC is only used for internal AMWTP container management.* [108, 159]

NOTE 14: *IDC SD-179 is assigned to Pre-1980 INL-Exhumed SDA Waste Retrieval Containers. The waste is associated with exhumed, generated, and/or repackaged during the Early Waste Retrieval (EWR) Project and placed into M-III bins and during the Initial Drum Retrieval (IDR) Project. The waste may be packaged into 85-gallon drums, FRP boxes, M-III bins and cargos and may include a primary waste form that is unknown at the time of TSA retrieval. The waste also includes waste previously identified as IW-179 and any combination of inner containers associated with IDCs SD-176 through SD-178.* [108]

NOTE 15: *See specific AMWTP off-site WSP for HWNs.*

NOTE 16: *Some containers within this IDC are classified as PCB and some are non-PCB. PCB status is determined based on information from CCP.*

NOTE 17: *The combustion/incineration of cyanide plating waste has not been confirmed by AMWTP AK. Prior profiling of the same waste by RF (i.e. the original generator) did not result in assignment of F006, F007, or F009 HWNs.* [9, 62]

NOTE 18: *Hazardous waste numbers and constituents are the same as BN-508.*

NOTE 19: *Temporarily assigned HWNs the same as MD-801.*

NOTE 20: *Contact Waste Services for the list of HWNs/hazardous constituents and PCB status.*

NOTE 21: *See P1381A for AK information on ANL-E remote-handled waste.*

NOTE 22: *This IDC is (or was) a Supercompactor feedstock IDC. See RPT-TRUW-83 for current approved feedstock IDCs.*

NOTE 23: *The F006, F007, and F009 have been conservatively applied due to the variety of sources that might have entered the wastes.*

NOTE 24: *See AMWTP RPT-TRUW-93.*

NOTE 25: *Waste may contain unvented aerosol cans.*

NOTE 26: *Any RF, MD, BC, RL, LA, or ID waste may contain aerosol cans.* [108]

NOTE 27: *RH waste see applicable RH document.*

NOTE 28: *Currently not in AMWTP inventory. HWNs and constituents will be completed prior to acceptance.*

NOTE 29: *HWNs initially assigned are reflective of generator supplied information. The initial HWNs may or may not represent the actual HWNs eventually applied to the waste stream. HWNs initially assigned to the waste apply until waste is shipped offsite to WIPP.* [195]

NOTE 30: *Unused reagent bottles of petroleum ether found during box line operations. Not previously reported by ANL-E.*

TBD Wastes identified as TBD have not had HWN assigned for purposes of WIPP profiling under an AMWTP WSP and/or have not undergone AK characterization evaluation.

WG Waste Generator's assignment of HWNs.

HI Hazardous constituent information relating to potential EPA hazardous constituent (e.g., listed or characteristic) or potential EPA hazardous characteristic property. The information is unconfirmed and was obtained from an interpretation of previously identified historical documents. Potential hazardous constituents do not necessarily reflect generator-assigned or final WIPP-assigned HWNs. These hazardous constituents were identified based on historical reviews of previously identified AK documents for purposes of supporting safe storage.

AK Confirmed AK information used to assign HWNs to an AMWTP waste stream, including any conservative HWN assignment that has been confirmed by AK.

WS WIPP-approved WSPF assigned HWNs.

PC Potential characterization information. Unless otherwise noted, wastes with no generator assigned HWNs are considered to be a mixed waste and are temporarily assigned HWNs associated with the identified hazardous constituent(s) for the IDC. Note the temporary HWN does not include P, K, or U-listed waste assumptions.

AMWTP Advanced Mixed Waste Treatment Project

AK Source Document Review Summary

B-2013-0077
RECORD
JMC 03/07/13

Form-1068, Rev. 4
Effective: 01/08/09
Page 1 of 1

Implementing Document: MP-TRUW-8.13

1. Source Document Tracking Number: D109A	2. Revision: N/A

3. Category

- ☐ Published Documentation
- ☐ Unpublished Documentation
- ☐ Correspondence
- ☑ Discrepancy

4. **Title/Description Information:** Discrepancy resolution for EDF-0783 and EDF-0768

Document Number: N/A
Revision: N/A
Author: AMWTP
Date: 02/28/2013

5. AK Element	6. Generator Or Waste Type(s)	7. Location in Source Doc.	8. AK Information Summary:
WS1, WS3, WS4, WS5, WS8	BN-508, BN-550	All	Discrepancy resolution for EDFs 0783 and 0768

9. **Document Summary:**

The document attempts to address differences between two EDFs. The EDFs establish possible negative impact to the AMWTP supercompactor during compaction of aerosol cans.

EDF-0783: Deflagration Analysis of Aerosol Can Propellant in the Supercompactor Glovebox

EDF-0768: Analysis of EDF-0768 Using Supercompaction as Treatment for the Removal of Liquids and Rupture of Aerosol Cans

10. **Source Document Data Limitations (if any):**

Document may be modified it source documents change.

11. AK Expert:	Tim Venneman		3/7/2013
	Print	Sign	Date

AMWTP Advanced Mixed Waste Treatment Project	Acceptable Knowledge Discrepancy Report	Form-1784, Rev. 1 Effective: 09/24/09 Page 1 of 2

Implementing Document: MP-TRUW-8.13

Waste Generator: AMWTP (BN)	
Source Document Tracking Number: D109A	Revision No.: N/A
Document Title/Description: Discrepancy resolution for EDF-0783 and EDF-0768	
References:	

Associated Source Document Tracking Number	Source Document Title	Document No./ Rev. No.	Author	Date	Page No.
P1828A	Engineering Design File 0768 (EDF-0768) Analysis of Using Supercompaction as Treatment for the Building/System No.: Removal of Liquids and Rupture of Aerosol Cans	EDF-0768 / 2	AMWTP, John Godak	01/06/2013	All
P1829A	Engineering Design File 0783 (EDF-0783) Deflagration Analysis of Aerosol Can Propellant in the Supercompactor Glovebox	EDF-0783 / 0	AMWTP, David K. Young	11/14/2012	

Nature of Discrepancy: EDF-0783 Rev. 0 notes that if three (3) aerosol cans were to be supercompacted within one silver that the pressure could cause damage to the supercompactor.
EDF-0768 Rev. 2 notes that supercompaction of three (3) aerosol cans would not cause damage to the supercompaction.

Resolution: The EDF-0783 was issued after EDF-0768. It is assumed that the latest EDF is correct.

Discrepancy Resolved?: ☑ Yes ☐ No

AMWTP Advanced Mixed Waste Treatment Project	Acceptable Knowledge Discrepancy Report	Form-1784, Rev. 1 Effective: 09/24/09 Page 2 of 2

Implementing Document: MP-TRUW-8.13

AK Personnel:	Tim Venneman		3-7-13
	Print	Sign	Date

EDF No.: EDF-0783	Revision No.:0	FMP No. (*if any*): NA
Title: Deflagration Analysis of Aerosol Can Propellant in the Supercompactor Glovebox	**Building/System No.:** WMF676/410	

Summary:

The conclusion from the first calculation determined that if the entire contents of 3 aerosol cans were to be released into the glovebox, develop a stoichiometric mixture, and ignite, the resulting overpressure (due to the entire 3 full can vapor cloud deflagration) would potentially develop an overpressure of 298.29 in wg, which is more than 50 times the design pressure. This ideal pressure deflagration event could likely cause severe structural damage to the supercompactor glove box. The damage could be severe enough that any radiological containment associated with the glovebox would likely be compromised (lost).

The conclusion from the second calculation is that one can (retaining approximately 5.7% (49 ml) liquid), if compacted and (under ideal stoichiometric conditions) resulting in a deflagration, would not exceed the given structural design of the supercompactor glovebox, when ventilation is operating at -1.5 in wg. Loss of radiological containment is not likely to occur.

Effective mitigation of a collocated fuel/air mixture and ignition source is achieved through monitoring and automatic shutdown of the supercompactor.

Additionally, there is not expected to be an ideal combustible fuel/air mixture migration to communicating areas that contain unrated electrical components.

EDF No.: EDF-0783	Revision No.:0	FMP No. (*if any*): NA
Title: Deflagration Analysis of Aerosol Can Propellant in the Supercompactor Glovebox	Building/System No.: WMF676/410	

References:

1. Zalosh, R.G., "Explosion Protection," *The SFPE Handbook of Fire Protection Engineering, Chapter 16,* Society of Fire Protection Engineers, Bethesda, MD, 2002
2. Beyler, C., "Flammability Limits of Premixed and Diffusion Flames," *The SFPE Handbook of Fire Protection Engineering, Chapter 7,* Society of Fire Protection Engineers, Bethesda, MD, 2002
3. Mitu, M., Brinzea, V., Musuc, A., Razus, D., Oancea, D., "Deflagration Parameters of Propane-air Mixtures in a Closed Cylindrical Vessel," *UPB Science Bulletin, Series B, Volume 73, Issue 3,* 2011
4. Diversified CPC International, *Liquefied Gas Propellant Handbook,* Channahon, IL
5. Godak, J., "Analysis of Compacting Lead and Aerosol Cans," *EDF-0768, Rev. 1,* 2012
6. Waste Isolation Pilot Plant, *TRUPACT-III PREx, Rev. 0,* June 2007
7. Air Liquide, *Gas Encyclopaedia* (online)
8. Zgliczynski, M., Sansalvadore, P., *Contribution to Safety Aspect Discussion on Isobutane Compressors for Domestic Refrigeration,* Purdue University, 1994

Originator:	David K. Young, P.E.	Signature	14 Nov 2012 Date:
Technical Review:	Bruce G. Campbell	Signature	11/14/12 Date:

EDF No.: EDF-0783	**Revision No.:**0	**FMP No. (*if any*):** NA
Title: Deflagration Analysis of Aerosol Can Propellant in the Supercompactor Glovebox	**Building/System No.:** WMF676/410	

Additional Reviewers: (by title)

Mechanical Engineer. Quin Blackburn		11/19/2012
Print Title	Signature	Date
Waste Programs Manager	ACTING FOR D. HAAR	12/19/12
Print Title	Signature	Date
Print Title	Signature	Date

Distribution List:

Carol Anderson, John Godak, Quin Blackburn, Dave Haar, Catherine Madore, Christian Maupin, Roger Raymond, Ron Warnecke

Approval:

Printed Name: Mark Wescoat

Printed Title: ES&H Director

Mark J. Wescoat — 11-20-12

Signature — Date

EDF No.: EDF-0783	Revision No.:0	FMP No. (*if any*): NA
Title: Deflagration Analysis of Aerosol Can Propellant in the Supercompactor Glovebox	**Building/System No.:** WMF676/410	

Scope:

AMWTP is evaluating the process of compacting waste drums containing unvented aerosol cans in the Supercompactor located in WMF-676. These cans may contain flammable propellant that, during the supercompaction process, is expected to be released into the supercompactor glovebox. Should the released propellant, in a flammable fuel/air mixture, find an ignition source, a vapor cloud deflagration within the glovebox would likely be the result. The temperatures generated during the supercompaction process are such that the minimum autoignition temperature of the propellant, which is between 450°C (842°F) and 460°C (860°F) (ref. 2, SFPE Handbook, Chapter 7, Table 2-7.1), is likely not reached. However, during the supercompaction process, there is likely to be ferrous metal on metal friction, which will create sparks. Sparks occurring during compacting is a significant and plausible ignition mechanism for a propellant/air mixture. This evaluation will analyze the overpressure effects, due to a vapor cloud explosion associated with the contents of 3 full aerosol cans, on the glovebox.

The maximum volume of propellant (if ignited), that will not challenge the structural integrity of the glovebox is also determined.

Analysis:

Assumptions:

- No explosion venting exists in the supercompactor glovebox (e.g. not taking credit for the venting effects of the ventilation ductwork),
- The liquid within the aerosol can consists of 50% product and 50% propellant, (ref. 6),
- The propellant within aerosol cans is flammable and is 29% propane/71% isobutane (ref. 6),
- Vapor cloud, which develops inside the glovebox, is a stoichiometric mixture of propellant and air,
- During compaction operations, the glovebox is at -1.5 in wg (-0.004 barg) (ref. 5),
- Initial pressure (P_o) = 101 x 10^3 Pa,
- Initial temperature (T_o) = 298 K,
- Aerosol can volume = 872 ml (can volume chosen to be consistent with EDF-0768) (ref. 5, 6).

EDF No.: EDF-0783	Revision No.:0	FMP No. (*if any*): NA
Title: Deflagration Analysis of Aerosol Can Propellant in the Supercompactor Glovebox		Building/System No.: WMF676/410

Given:

- Supercompactor maximum design pressure = 0.01 barg (4 in wg) (ref. 5),
- The release of three (3) full aerosol cans (provided there is no combustion) will result in loss of vacuum within the glovebox (ref. 5),
- Stoichiometric concentration of propane ($\chi_{propane}$) = 4.02% volume (ref. 3),
- Stoichiometric concentration of isobutane ($\chi_{isobutane}$) = 3.5% volume (ref. 8),
- Stoichiometric concentration of propellant ($\chi_{propellant}$) = 3.65% volume (ref. 8) (calculated: (4.02%)(0.29)+(3.5%)(0.71)),
- Molecular weight of propane ($M_{propane}$) = 44.1 kg/kmol (ref. 7),
- Molecular weight of isobutane ($M_{isobutan}$) = 58.1 kg/kmol (ref. 7),
- Molecular weight of propellant ($M_{propellant}$) = 54.0 kg/kmol (calculated: (44.1 kg/kmol)(0.29)+(58.1 kg/kmol)(0.71)),
- Volume of supercompactor glovebox (V) = 96.3m^3 (3400 ft^3),
- Molecular weight of air (M_{air}) = 28.8 g/mol,
- Gas constant (R) = 8,314 kg m^2/(s^2 kmol K)=8,314 Pa m^3/(kmol K),
- $\rho_{propane}$ = 0.493 g/ml (ref. 7),
- $\rho_{isobutane}$ = 0.593 g/ml, (ref. 7),
- $\rho_{propellant}$ = 0.564 g/ml (calculated: (0.493 g/ml)(0.29)+(0.593 g/ml)(0.71)),
- $P_{max\text{-}propane}$ = 7.90 barg (ref. 1),
- $P_{max\text{-}isobutane}$ = 7.75 barg (ref. 8),
- $P_{propellant}$ = 7.79 barg (calculated: (7.9 barg)(0.29)+(7.75 barg)(0.71)).
- Liquid to gas dispersion; propane = 272.3 (ref. 5)
- Liquid to gas dispersion; isobutane = 229.3 (ref. 5)

EDF No.: EDF-0783	Revision No.:0	FMP No. (*if any*): NA
Title: Deflagration Analysis of Aerosol Can Propellant in the Supercompactor Glovebox	**Building/System No.:** WMF676/410	

Calculation one of this analysis will determine the maximum pressure developed within the supercompactor glovebox, given a stoichiometric propellant/air mixture, vapor cloud deflagration due to the involvement of three (3) , 872 ml cans at 100% capacity, of which 50% is propellant. 3 cans is used in the calculation because the result of the analysis from EDF-0768, Rev. 1, "Analysis of Compacting Lead and Aerosol Cans," indicates that 3 aerosol cans can potentially be compacted (assuming ventilation within the glovebox is operational and there is no combustion of propellant) without affecting the structural integrity of the supercompactor glovebox. It is necessary to determine the effect on the glovebox due to a vapor cloud deflagration resulting from the release of 3 full aerosol cans.

First, we need to find the molecular weight of the stoichiometric mixture of propellant in air:

- $M_{mix} = (\chi_{propellant})(M_{propellant}) + (1 - \chi_{propellant})(M_{air})$

  = (0.0365)(54.0 kg/kmol) + (1-0.0365)(28.8 kg/kmol)

  = 29.72 kg/kmol

The stoichiometric mixture density is calculated from the ideal gas law:

- $\rho_{mix} = \frac{M_{mix} P_o}{R T_o}$

  = (29.72 kg/kmol)(101x10^3 Pa)/((8314 Pa m^3/kmol•K)(298 K))

  = 1.21 kg/m^3

Propellant mass required to fill the glovebox at stoichiometric concentration:

- $m_o = \left[\frac{\chi_{propellant} M_{propellant}}{M_{mix}}\right] \rho_{mix} V$

  = [(0.0365)(54.0 kg/kmol)/(29.72 kg/kmol)]•1.21 kg/m^3•96.3m^3

  = 7.73 kg

EDF No.: EDF-0783	Revision No.:0	FMP No. (*if any*): NA
Title: Deflagration Analysis of Aerosol Can Propellant in the Supercompactor Glovebox	Building/System No.: WMF676/410	

Total mass of propellant contained in 3 aerosol cans:

- $m_{propellant}$ = (3 cans)(872 ml)(0.5)(0.564 g/ml)(1 kg/1000 g)

  = 0.738 kg

Ratio of mass of propellant to mass required to fill glovebox at stoichiometric concentration:

- $m_{propellant}/m_o$ = (0.738 kg)/(7.73 kg)

  = 0.0954

Max pressure within the glovebox due to deflagration from the release of 3 full aerosol cans:

(using the calculated value for $P_{max} - P_o$ for propellant of 7.79 barg)

- P_{max}-P_o = (7.79 barg)(0.0954)

  = 0.743 barg = 298.29 in wg

This exceeds the 0.014 barg (5.5 in. wg) maximum pressure increase.

Calculation 2 of this analysis will determine the maximum amount of propellant that could be released into the glovebox, develop a stoichiometric mixture, and ignite that would not cause damage (i.e., be within the maximum supercompactor glovebox design pressure) to the glovebox.

Set P_{max}-P_o = 5.5 in wg (0.014 barg)

Determine new mass of propellant to mass fraction of propellant that will not exceed glovebox design parameters:

- P_{max}-P_o = (0.014 barg) = (7.79 barg)(x)

  Solving for x:

  x = 0.0018

EDF No.: EDF-0783	Revision No.:0	FMP No. (*if any*): NA
Title: Deflagration Analysis of Aerosol Can Propellant in the Supercompactor Glovebox	**Building/System No.:** WMF676/410	

Total mass of propellant that will not exceed glovebox design parameters:

- $m_{propellant} = (m_o)(0.0018)$

  $= (7.73\ kg)(0.0018) = 0.0139\ kg = \underline{13.9\ g}$

Total volume of propellant that will not exceed glovebox design parameters:

- $V_{propellant} = (m_{propellant})/(\rho_{propellant})$

  $= (13.9\ g)/(0.564\ g/ml) = \underline{24.65\ ml}$

Total amount of propellant initially in one aerosol can

$V_{propellant} = 872\ ml * 0.5 = 436\ ml$

Portion of 1 can that will not exceed glovebox maximum overpressure design pressure (if deflagration of stoichiometric propellant/air mixture occurs):

$= \underline{24.65\ ml/436\ ml = 5.7\%\ of\ initial\ propellant\ charge\ of\ one\ can}$

This relates to approximately 49 ml (aggregate) observable liquid.

The only concern is a deflagration outside the compactor collar. According to AMWTP Engineering, the inside volume of the mold when compaction starts is between approximately 69 and 72 gallons, depending on the height of the drum. Subtracting out 55 gallons for the drum gives 14 – 17 gallons of surrounding air space. The air within the drum itself is neglected, under the assumption that most of it will be evacuated prior to building enough internal pressure to breach the aerosol cans. This volume (14 – 17 gallons) is sufficiently small so that the pressure created by a deflagration, due to the ignition of a stoichiometric fuel/air mixture, is well below that necessary to challenge the glovebox design. Also, qualitatively, the collar will act to suppress any pressure rise within the collar.

Because the primary mode of ignition is sparking developed in the waste matrix during supercompaction, administrative and/or engineering controls may be implemented that would decrease the probability of an ignition. These controls may allow the volume of observable liquid to be increased, given the overall risk is

EDF No.: EDF-0783	Revision No.:0	FMP No. (*if any*): NA
Title: Deflagration Analysis of Aerosol Can Propellant in the Supercompactor Glovebox	**Building/System No.:** WMF676/410	

accepted by ITG management and the maximum possible fire loss, as determined by RPT-ESH-012, WMF-676 Fire Hazards Analysis and Fire Safety Assessment, does not exceed limits outlined in DOE STD-1066, Fire Protection.

The control that is evaluated in this EDF is that of lower explosive limit (LEL) detection with automatic shutdown of the supercompaction process. This method was chosen as it is meant to eliminate the ignition source (i.e., sparking during the compaction process) at the time a combustible fuel/air mixture is present within the glovebox.

The gas detector chosen for this control is the MSA, Ultima XIR Gas Monitor (this may change based on feedback from MSA). It can provide an output signal so that automatic shut-down of the compaction process can be achieved (i.e., without human interface). This detector model provides a readout directly on the monitor in addition to the ability of the monitor to transmit the percent LEL to a remote location. The environment within the glove box is normally inaccessible for maintenance and calibration activities. Routine calibration for the MSA detector does not require cal-gas and the zero adjustment meets the requirement for full calibration. However, it is recommended that calibration gas be used, as part of the system operability test, for the initial monitor calibration. The detector is immune to poisoning and the detector life is not reduced from gas exposure. The detector automatically compensates for humidity and temperature changes and is capable of operating in high gas and low oxygen environments.

Field-selectable algorithms can be set, for this detector, so that a variety of hydrocarbon-based gases can be detected. This is critical as the actual propellants within the aerosol cans are not known. The most common hydrocarbon based aerosol propellants include:

- isobutane (flammable limits 1.8% - 8.44%)
- n-butane (flammable limits 1.86% - 8.41%)
- propane (flammable limits 2.1 % - 10.1%)
- methyl ethyl ether (flammable limits 2.0% - 10.1%)
- dimethyl ether (flammable limits 3.4% - 27%)

The alarm calibration is based on the IR absorbing properties of the gas, as well as the concentration. For the propellants listed above the calibration should be based on butane, which has very similar properties to

EDF No.: EDF-0783	Revision No.:0	FMP No. (*if any*): NA
Title: Deflagration Analysis of Aerosol Can Propellant in the Supercompactor Glovebox	Building/System No.: WMF676/410	

isobutane and has the same flammable limits.

Once the detector goes into "alarm" (i.e., flammable gas is detected greater than some fraction of the LEL) and the compaction process is automatically stopped and criteria for restart will be established. This, at a minimum, should be that the detector has cleared and is no longer in "alarm."

For proper detection of flammable gases, and to minimize nuisance alarms, the detector will be located, within the glovebox, based on consultation with Engineering. The philosophy for placement of the detector and the alarm set point is that prior to detector activation (given the development of a fuel/air mixture that may challenge the design parameters of the glovebox), the mixture inside the collar (where the potential ignition sources are) is not within the explosible range of the fuel. The compaction is shut down (thus eliminating ignition sources) well before an explosible fuel/air mixture develops within the collar.

Because there are electrical components that are not rated for hazardous locations, in spaces that communicate with the supercompactor glovebox, this analysis will determine if a fuel/air mixture will develop in the presence of these components.

Based on a propellant mixture of 29% propane and 71% isobutane, the volume of the propellant gas is as follows:

- V_{liquid} *(per can)* = 0.50 x 872 ml = 436ml = 0.015ft^3
- V_{gas} *(total)* = (3 cans)(0.015 ft^3)[(0.29)(272.3) + (0.71)(229.3)]

  = <u>10.88 ft^3</u>
- $V_{stoichiometric}$ = 10.88 ft^3/0.035 = <u>298.1 ft^3</u>
- V_{LEL} = 10.88 ft^3/0.018 = <u>604.4ft^3</u>

EDF No.: EDF-0783	Revision No.:0	FMP No. (*if any*): NA
Title: Deflagration Analysis of Aerosol Can Propellant in the Supercompactor Glovebox	Building/System No.: WMF676/410	

If we look at the V_{LEL} as a sphere, centered at the top of the collar (where propellant will be discharged), the radius due to this propellant "cloud" would extend 5.25 ft. radially. All non-rated electrical components are outside this distance.

Summary:

The conclusion from the first calculation determined that if the entire contents of 3 aerosol cans were to be released into the glovebox, develop a stoichiometric mixture, and ignite, the resulting overpressure (due to the entire 3 full can vapor cloud deflagration) would potentially develop an overpressure of 298.29 in wg, which is more than 50 times the design pressure. This ideal pressure deflagration event could likely cause severe structural damage to the supercompactor glove box. The damage could be severe enough that any radiological containment associated with the glovebox would likely be compromised (lost).

The conclusion from the second calculation is that one can (retaining approximately 5.7% (49 ml) liquid), if compacted and (under ideal stoichiometric conditions) resulting in a deflagration, would not exceed the given structural design of the supercompactor glovebox, when ventilation is operating at -1.5 in wg. Loss of radiological containment is not likely to occur.

Effective mitigation of a collocated fuel/air mixture and ignition source is achieved through monitoring and automatic shutdown of the supercompactor.

Additionally, there is not expected to be an ideal combustible fuel/air mixture migration to communicating areas that contain unrated electrical components.

EDF No.: EDF-0783	Revision No.:0	FMP No. (*if any*): NA
Title: Deflagration Analysis of Aerosol Can Propellant in the Supercompactor Glovebox		Building/System No.: WMF676/410

Attachments (*If any*):

MSA Ultima XIR Gas Monitor data sheet.

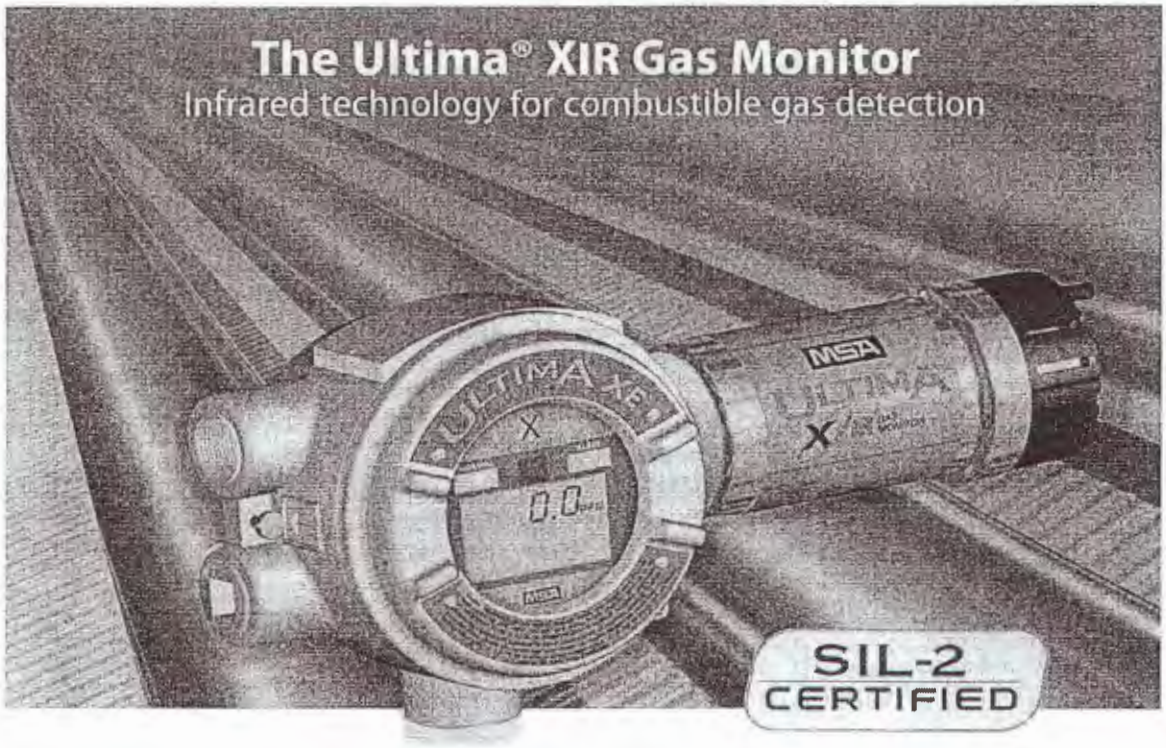

Features

- DuraSource Technology offers improved IR sensor life
- Field-selectable algorithms for a variety of hydrocarbon-based gases
- LCD display with scrolling messages and LEDs
- Single-board design for ultimate reliability and easy, no-tool servicing
- 4-20mA, HART, and Modbus (X³ᵉ Technology) output
- Optional quick-check LEDs for increased product visibility
- *Fail-to-safety* operation

Benefits

- No-gas calibration; zero adjustment meets requirement for full calibration
- Extremely fast response speed (t90 < 2 sec)
- Designed without sintered disk for optimum performance in harsh, offshore environments
- Operates over extended temperature ranges
- Immune to poisoning
- No sensor life reduction from gas exposure
- Automatic compensation for humidity and temperature changes
- Operates in high gas and low oxygen environments

DURA™ SOURCE TECHNOLOGY 10-YEAR WARRANTY

MSA The Safety Company

The Ultima XIR Gas Monitor is a microprocessor-based, infrared point gas detector for continuous monitoring of combustible gases and vapors. Designed around a rugged, 316 stainless steel enclosure, the Ultima XIR Monitor has multiple entries for maximum flexibility.

Ultima XIR Monitor operation is based upon dual-wavelength, heated-optics technology, providing definitive compensation for temperature, humidity, and aging effects. IR technology offers excellent long-term stability, eliminates the need for frequent calibrations, and reduces overall cost of ownership.

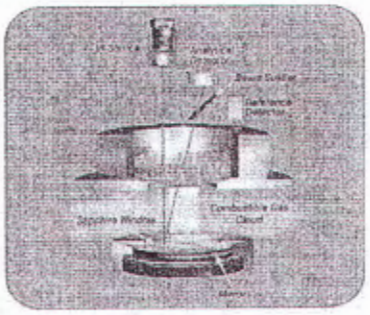

Principles of IR Technology

The Ultima XI Gas Monitor uses an electronically modulated infrared energy source and two detectors that convert infrared energy into electrical signals. Each detector is sensitive to a different range of wavelengths in the spectrum's infrared portion.

The source emission is directed through a main enclosure window into an open volume. A mirror at the end of this volume, protected by a second window, directs energy back through the main enclosure window and onto the detectors.

Combustible gas presence in the open volume will reduce the source emission intensity reaching the analytical detector but not the source emission intensity reaching the reference detector. The microprocessor monitors the ratio of these two signals and correlates this ratio to a %LEL combustible reading.

Ordering Information

All Ultima X Series Gas Monitors are manufactured using MSA's Assemble-To-Order (ATO) process. For further information on the Ultima X Series Gas Monitors, see bulletins 07-2051-MC and 07-2054-MC.

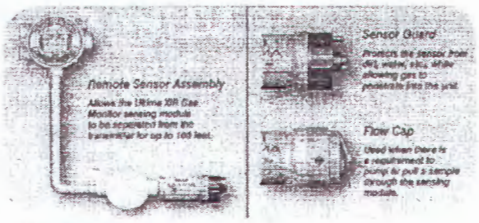

Ultima XIR Accessories

Specifications

Gas Types and Ranges	Combustible gases & vapors; 0-100% LEL CO_2 0-5% and 0-2% by volume, 0-5000 ppm
Temperature Range	-40°C to +60°C (-40°F to +140°F)
Stability	± 2% full scale/year
Repeatability	± 1% full scale
Accuracy	± 3% full scale (≤ 50% LEL) ± 5% full scale (> 50% LEL)
Response Times (without sensor guard) t90	< 2 sec
Humidity	0%-95% RH, non-condensing
Sensor Warranty	10 years for IR source
Power Input	8-30 VDC, 5 watts
Current Draw	290mA maximum @ 24 VDC
Wiring Requirements	3-wire
Signal Output	4-20mA 3-wire current source
Conduit Entries	One entry, 3/4" NPT (19.05 mm) with optional conduit
Physical Weight Dimensions	316 stainless steel 6 lbs. (2.7 kg) 2.5" dia. x 8" long (64 x 203 mm)
Approval Ratings	$_{C}FM_{US}$ $_{C}UL_{US}$ CSA Class I, Div. 1 and 2, Groups A, B, C, & D Class II, Div. 1, Groups E, F, & G Class III ANSI/ISA 12.13.01 CSA C22.2 No. 152 Combustible Gas Performance, Class I, Div. 1 and Groups B, C, & D CE EMC Directive: 89/336/EEC CE ATEX Directive 94/9/EC II 2G EEx d IIc T5 (Tamb -40°C to +60°C) TYPE 4X, IP 66 SIL 2 assessed to IEC 61508

Note: This Bulletin contains only a general description of the products shown. While uses and performance capabilities are described, under no circumstances shall the products be used by untrained or unqualified individuals and not until the product instructions (including any warnings or cautions provided) have been thoroughly read and understood. Only they contain the complete and detailed information concerning proper use and care of these products.

ID 07-2054-MC / Aug 2011
© MSA 2011 Printed in U.S.A.

MSA Corporate Center
1000 Cranberry Woods Drive
Cranberry Township, PA 16066
Phone 724-776-8600
www.msanet.com

U.S. Customer Service Center
Phone 1-800-MSA-FIRE
Fax 1-800-967-0398

MSA Canada
Phone 1-800-672-7222
Fax 1-800-967-0398

MSA Mexico
Phone 01 800 672 7372
Fax 52-44 2227 3943

MSA International
Phone 724-776-8626
Toll-free 1-800-672-7222
Fax 724-741-1539

Offices and representatives worldwide
For further information

The Safety Company

MSA The Safety Company — Ultima® XIR Gas Monitor Quick Start-Up Guide

⚠ WARNING

This Guide is not a substitute for the manual contained in the Product Literature CD. The Ultima X Series Gas Monitor Manual must be carefully read by all individuals who have or will have the responsibility for using or servicing the product. Failure to follow this warning can result in serious personal injury or loss of life.

1. Remove the lid and the electronics from the enclosure (FIGURE 1).
2. Mount the enclosure in the desired location and run wiring to the enclosure per instructions on the enclosed Installation Outline Drawing. The XIR sensor should be mounted horizontally as shown in FIGURE 1.
3. Connect 8 to 30 VDC power lead to J8-1 (FIGURE 2).
4. Connect the signal ground wire to J8-3.
5. Connect J8-2 to the 4 - 20 mA input on remote system.
6. Connect the sensor module to J-1 on the main pc board.
7. Wire for optional acknowledge push-button (J10) and/or optional relays (FIGURE 3).
8. Connect the optional HART barrier to J9 (FIGURE 3).
9. Assemble the electronics assembly and the lid on the enclosure.
10. Apply power and observe the LCD as all segments light, software version displays, and a 30-second (self-check) countdown occurs.
11. After 30-second countdown, observe that the gas type and gas concentration alternately display. (For units with LEDs, green LED is ON and red LED is OFF).
12. Perform a gas check to ensure proper operation.

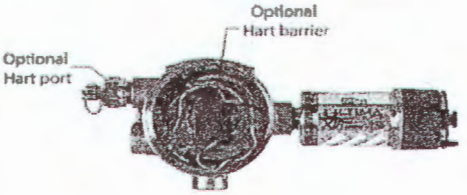

Figure 1

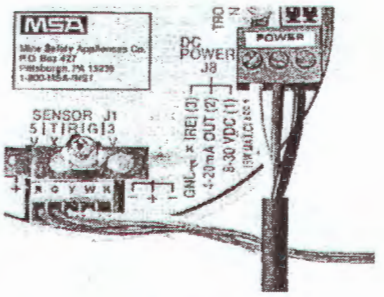

Figure 2

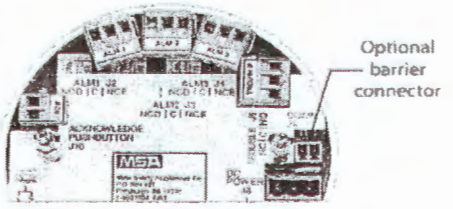

Figure 3

© MINE SAFETY APPLIANCES COMPANY 2008

EDF No.: EDF-0768	**Revision No.:**2	**FMP No. (*if any*): N/A**
Title: Analysis of Using Supercompaction as Treatment for the Removal of Liquids and Rupture of Aerosol Cans		**Building/System No.:** WMF676/410

Summary:

1. Most components present in the waste treated in the Supercompactor (wood, soft metals, plastics, glass) lack the compressive strength required to protect an aerosol can or liquid container from destruction during compaction. Only high strength materials located at the bottom of the waste container have potential to offer such protection.
2. Forty expended aerosol cans containing residual pressure but no propellant, in a single compaction will not challenge the Supercompactor glovebox pressure design criteria.
3. The equivalent of forty unused aerosol cans (still containing a full propellant charge) in a single compaction will challenge the Supercompactor glovebox pressure design criteria.
4. The equivalent of three fully charged aerosol cans can be simultaneously compacted without causing a loss of depression in the glovebox.

References:

1. www.matweb.com, Mechanical Properties for lead (Pb).
2. Mechanical Engineering Design, 5th Ed., Shigley & Mischke
3. TRUPACT-III PREx, Rev. 0, June 2007
4. BNFL Supercompactor Glovebox drawings
5. Air Liquide Gas Encyclopedia (online), CO_2 properties attached

Originator:	John Godak	1/16/13	
	Signature	Date:	
Technical Review:	Kevin Bake	1/16/13	
	Signature	Date:	

Additional Reviewers: (by title)	

EDF No.: EDF-0768	**Revision No.:**2	**FMP No. (*if any*): N/A**
Title: Analysis of Using Supercompaction as Treatment for the Removal of Liquids and Rupture of Aerosol Cans		**Building/System No.:** WMF676/410

Print Title	Signature	Date
Print Title	Signature	Date

Distribution List:

Ron Todd, Ron Warnecke, Dave Haar, Kurt Zorn, Carol Anderson, Catherine Madore, Quin Blackburn, David Young, John Godak, Kevin Bake

Approval:

Printed Name: Quin Blackburn

Printed Title: Engineering Lead

Signature 1/17/2013 Date

EDF No.: EDF-0768	**Revision No.:**2	**FMP No. (*if any*): N/A**
Title: Analysis of Using Supercompaction as Treatment for the Removal of Liquids and Rupture of Aerosol Cans		**Building/System No.:** WMF676/410

Scope:

This evaluation to use supercompaction as treatment considers the following issues:

1. Under what conditions aerosol cans or containers of liquids could potentially be expected to survive the compaction process.
2. The number of aerosol cans necessary to challenge the Supercompactor glovebox structural integrity via increased pressurization. (Note that this analysis only addresses the additional pressure resulting from breaching aerosol cans and allowing the liquid propellants therein to flash to vapor. The potential pressure increase resulting from a deflagration of the aerosol propellants is analyzed in EDF-0783.)

EDF No.: EDF-0768	Revision No.:2	FMP No. (*if any*): N/A
Title: Analysis of Using Supercompaction as Treatment for the Removal of Liquids and Rupture of Aerosol Cans		**Building/System No.:** WMF676/410

Analysis:

Material survivability during compaction:

The ability of a waste component to withstand compression is dependent upon the type of material and the size of the component. Under compressive loads, waste components will deform until their surface area is large enough to counterbalance the applied pressure (force per unit surface area). The following analysis of a lead brick is provided as an example:

The Ultimate Tensile Strength of lead is given in reference 1 as 2610 psi. Note that this tensile strength is applicable although the analysis is for lead in compression (see reference 2). To calculate the area of lead required to withstand the four million pounds (2000 tons) force exerted by the Supercompactor, the simple equation below is used. F is the force exerted during compaction. P represents the Ultimate Strength of the material, and A is the area that will be attained at maximum deflection.

$$A = \frac{F}{P} \rightarrow \frac{4{,}000{,}000\ lb}{2610\ \frac{lb}{in^2}} = 1532 in^2 = 10.6 ft^2$$

This area is larger than what could be attained inside the Supercompactor mould (approximately 3.4 ft^2) therefore the lead would compress and flow to the point where it is contained by the mould. The point of this analysis is simply to show that the lead would deform under the force of compaction as opposed to preventing the compaction of an adjacent aerosol can.

A similar analysis can be performed for most of the material types found in the AMWTP waste inventory, including other soft metals, woods, plastics and glass. Drummed waste components constructed of these materials simply do not have the compressive strength necessary to resist the 4,000,000 pound force applied by the compactor.

Only the metals potentially have sufficient compressive strength to provide some resistance to compaction, and even with these, significant deformation will occur before the surface area is large enough to counterbalance the applied pressure. Consider a solid cube of hardened stainless steel, 4 inches on a side. Such an item would present a surface area of 16 square inches prior to compaction. Using the same method as the lead brick described above, with a compressive strength of 125,000 psi (most stainless steels expected in the waste have a compressive strength

EDF No.: EDF-0768	Revision No.:2	FMP No. (*if any*): N/A
Title: Analysis of Using Supercompaction as Treatment for the Removal of Liquids and Rupture of Aerosol Cans		**Building/System No.:** WMF676/410

closer to 40,000 psi), the cube would deform. Once the steel is compressed such that it has a cross-sectional area of 32 in^2 it will prevent further compaction.

As such it is improbable that any expected waste component could effectively shield a pocket of liquid or an aerosol can from destruction during compaction. This conclusion is supported by visual inspection of the pucks generated during commissioning of the AMWTF which shows substantial deformation (flattening) of all waste materials, including steel members as shown in Figure 1 below.

Figure 1 - Cross section of puck containing deformed steel members

Nonetheless, it is conceivable, if implausible, that large, steel items on the bottom of a drum, like a large electrical motor or gearbox, could be significantly deformed by the compaction process, and yet still be large enough to shield a pocket of liquid or an aerosol can. As such, any such configurations noted during RTR will be routed to the boxline, rather than to direct compaction.

The likelihood of any free liquids remaining within the waste after compaction is unlikely. Routinely liquids that are ejected from the compaction process, or "squeezants", are collected in one gallon containers and sent for further processing and a record is logged for each. The amount of liquids collected depends on the type of waste being processed, but "soft" waste (wood, rags, any absorbent materials) generate the most liquids. Figure 2 below shows squeezants being collected.

EDF No.: EDF-0768	Revision No.:2	FMP No. (*if any*): N/A
Title: Analysis of Using Supercompaction as Treatment for the Removal of Liquids and Rupture of Aerosol Cans		**Building/System No.:** WMF676/410

Figure 2 – "Squeezants" being collected in Supercompactor glovebox

The waste that generates these squeezants appears to have no liquids present during radiographic pre-processing inspections, yet the liquids that are absorbed within the waste are ejected during compaction as a result of the intense forces applied. By comparison, any free liquids that might be present in a waste container would certainly be ejected as well.

The Compaction of Pressurized Aerosol Cans:

For the purposes of this analysis a standard aerosol can is used as described in reference 3. This can is the largest standard U.S. can at 872 mL. While multiple variations of propellants have been used throughout industry, the most common is a propane/isobutane mixture. In liquid form, at room temperature (70°F), this mixture provides a fairly constant pressure of 69 psig inside the can (ref. 3). At AMWTP altitude of approximately 5000 feet, this converts to absolute pressure as

EDF No.: EDF-0768	Revision No.:2	FMP No. (*if any*): N/A
Title: Analysis of Using Supercompaction as Treatment for the Removal of Liquids and Rupture of Aerosol Cans		**Building/System No.:** WMF676/410

follows:

$$P_a = P_g + P_{atm} = 69psi_g + 12.2psi_{atm} = 81.2psi_a$$

This analysis presents two conditions of the aerosol cans during compaction, both of which assume 40 cans are involved in a single compaction. (Forty cans is a bounding estimate based on waste stream history at AMWTP.) Also note that the glovebox is assumed to have entirely enclosed surfaces and the gloves and glove ports are ignored.

The first condition is based on the assumption that the cans are completely expended, yet still hold a residual pressure due to the evaporation of the final traces of propellant after the product was expelled. Therefore, no liquid propellant vaporization is analyzed in this first condition.

The second condition does consider the expansion of liquid propellant and assumes that the can is unused and still contains both the propellant and product. For the purposes of this EDF, it is assumed that only the propellant will affect the glovebox pressure, and that the product (paint, adhesive, lubricant, etc.) in the can will not cause a pressure change when released during a compaction. Typically aerosol cans have a product-to-propellant ratio of 3:1, thus containing 25% (by volume) propane/isobutane propellant. To be consistent with Reference 3 and due to the variable nature of the various products contained in aerosol cans, this analysis will conservatively assume the cans to contain 50% (by volume) propellant mixture.

Condition 1, Spent aerosol cans:

$$872mL = 0.031ft^3$$

$$P_1V_1 = P_2V_2 \rightarrow V_2 = \frac{P_1V_1}{P_2}$$

$$V_2 = \frac{40\ cans \times (81.2\ psi) \times (0.031\ ft^3)}{12.2\ psi} = 8.3\ ft^3$$

This expansion of pressurized gas into the glovebox introduces a temporary pressure transient. As the glovebox ventilation operates this transient will dissipate, but the initial change in pressure (P_{exp}) is calculated below. Per reference 4 and field measurements, the internal volume of the Supercompactor glovebox is approximately 3400 ft^3, and is designed to handle internal pressures

EDF No.: EDF-0768	Revision No.:2	FMP No. (*if any*): N/A
Title: Analysis of Using Supercompaction as Treatment for the Removal of Liquids and Rupture of Aerosol Cans		**Building/System No.:** WMF676/410

from -4"wc to 4"wc. Assuming the initial pressure of the glovebox is 1 atm,

$$P_{exp} = \frac{1atm \times 8.3\ ft^3}{3400\ ft^3} = .0024\ atm = 0.99"wc$$

Since the normal operating range of the glovebox is approximately -1.5"w.c., the introduction of this 0.99"w.c. will temporarily cause the glovebox to lose some depression, but will not exceed the design basis pressure limits.

Condition 2, Full aerosol cans:

$$.50 \times 872mL = 436mL = 0.015ft^3 \text{ liquid propellant}$$

Based on the propellant mixture being similar to that shown in reference 3, and the liquid to gas dispersion ratios for propane and isobutane, the volume of gas released from 40 such cans is as follows:

$$V_{\exp} = 40cans \times 0.015ft^3[(0.29 \times 272.3) + (0.71 \times 229.3)] = 145ft^3$$

A calculation of the pressure as a result of this expansion similar to that done in Condition 1 above:

$$P_{exp} = \frac{1\ atm \times 145\ ft^3}{3400\ ft^3} = .043\ atm = 17.4"wc$$

In comparison to Condition 1 where the cans are expected to be expended, Condition 2 results in a substantially higher pressure being imparted to the glovebox which exceeds the maximum design pressure of 4"wc. Note that this equates to approximately 0.44"wc/can, therefore, approximately 9 full aerosol cans (or the equivalent thereof) could be compacted without exceeding the 4.0"wc pressure criteria of the glovebox. Normal operating pressure in the glovebox is approximately -1.5"wc so 3 full can equivalents could be compacted before causing the glovebox to lose depression and become pressurized.

Another comparison worth noting here are the results of an event which occurred in which a fire extinguisher was compacted. Video recorded during the event shows the fire extinguisher to be consistent in size with that of a 10lb CO_2 type. Assuming that the extinguisher was fully charged

EDF No.: EDF-0768	Revision No.:2	FMP No. (*if any*): N/A
Title: Analysis of Using Supercompaction as Treatment for the Removal of Liquids and Rupture of Aerosol Cans		**Building/System No.:** WMF676/410

with CO_2, the resultant gas cloud and ensuing pressure transient are calculated as follows:

$$V_{liqCO2} = \frac{M_{liqCO2}}{\delta_{liqCO2}} = \frac{10\ lb}{64.4\frac{lb}{ft^3}} = 0.155 ft^3$$

Liquid to gas expansion ratio for CO_2 is 845 (reference 5).

$$V_{gasCO2} = 845(0.155 ft^3) = 131 ft^3$$

This gas expansion that actually occurred within the glovebox is presented here simply as a qualitative reference by which the potential for damage to the glovebox can be estimated. The calculations in this document conservatively ignore the "shock absorber" effect that the rubber gloves in the glovebox would provide during an expansion event. It was noted during the expansion of the CO_2 from the extinguisher compaction that the gloves (which are normally pulled into the glovebox by depression) relaxed temporarily. This indicates that they indeed offer some cushioning effect against a pressure transient, although this is not taken into account in this paper in a quantitative sense.

EDF No.: EDF-0768	Revision No.:2	FMP No. (*if any*): N/A
Title: Analysis of Using Supercompaction as Treatment for the Removal of Liquids and Rupture of Aerosol Cans		**Building/System No.:** WMF676/410

Summary:

1. Calculations show that the Supercompactor will compact and deform solid lead, thus proving that solid lead objects will not prevent the destruction of adjacent objects during compaction.
2. Forty expended aerosol cans containing residual pressure but no propellant, in a single compaction will not challenge the Supercompactor glovebox pressure design criteria.
3. The equivalent of forty unused aerosol cans (still containing a full propellant charge) in a single compaction will challenge the Supercompactor glovebox pressure design criteria.
4. The equivalent of three fully charged aerosol cans can be simultaneously compacted without causing a loss of depression in the glovebox.

Attachments (*If any*):

N/A

REFERENCE 1

Electrochemical Equivalent	3.858 g/A/h	3.858 g/A/h

Mechanical Properties	Metric	English	Comments
Hardness, Brinell	4.2	4.2	Cast
Hardness, Vickers	5.00	5.00	
Tensile Strength, Ultimate	18.0 MPa	2610 psi	
Modulus of Elasticity	14.0 GPa	2030 ksi	
Poissons Ratio	0.420	0.420	
Shear Modulus	4.90 GPa	711 ksi	calculated

Electrical Properties	Metric	English	Comments
Electrical Resistivity	0.000020643 ohm-cm @Temperature 20.0 °C	0.000020643 ohm-cm @Temperature 68.0 °F	
	0.000027021 ohm-cm @Temperature 100 °C	0.000027021 ohm-cm @Temperature 212 °F	
	0.000036378 ohm-cm @Temperature 200 °C	0.000036378 ohm-cm @Temperature 392 °F	
	0.000047938 ohm-cm @Temperature 300 °C	0.000047938 ohm-cm @Temperature 572 °F	solid
	0.000097867 ohm-cm @Temperature 340 °C	0.000097867 ohm-cm @Temperature 644 °F	liquid
	0.000101418 ohm-cm @Temperature 400 °C	0.000101418 ohm-cm @Temperature 752 °F	liquid
Magnetic Susceptibility	-1.20e-7	-1.20e-7	cgs/g
Critical Magnetic Field Strength, Oersted	802 - 804	802 - 804	
Critical Superconducting Temperature	7.19 - 7.202 K	7.19 - 7.202 K	3.55 K at 16.0 GPa pressure for Pb II

Thermal Properties	Metric	English	Comments
Heat of Fusion	24.1 J/g	10.4 BTU/lb	
Heat of Vaporization	850 J/g	366 BTU/lb	
	866.313 J/g	372.688 BTU/lb	At Boiling Point
CTE, linear	29.1 µm/m-°C @Temperature 20.0 - 100 °C	16.2 µin/in-°F @Temperature 68.0 - 212 °F	
Specific Heat Capacity	0.100386 J/g-°C	0.0239929 BTU/lb-°F	Gas
	0.1287 J/g-°C @Temperature 25.0 °C	0.03076 BTU/lb-°F @Temperature 77.0 °F	
	0.132 J/g-°C @Temperature 127 °C	0.0315 BTU/lb-°F @Temperature 261 °F	
	0.1368 J/g-°C @Temperature 227 °C	0.03270 BTU/lb-°F @Temperature 441 °F	
	0.139 J/g-°C	0.0332 BTU/lb-°F	liquid

EDF-0768
Reference 2
Page 12 of 27

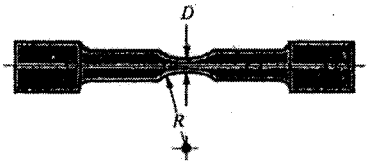

FIGURE 5-4
Tension specimen after necking. Radius of neck is R; diameter of smallest portion of neck is D.

as the radius of the neck (Fig. 5-4), and D as the smallest neck diameter, the equation is

$$\sigma_{ACT} = \frac{\sigma_C}{\left(1 + \frac{4R}{D}\right)\left[\ln\left(1 + \frac{D}{4R}\right)\right]} \tag{5-3}$$

When necking occurs, the engineering strain given by Eq. (5-1) will not be the same at all points within the gauge length. A more satisfactory relation can be obtained by using areas. Since the volume of material remains the same during the test, $A_0 l_0 = A_i l_i$. Consequently, $l_i = l_0(A_0/A_i)$. Substituting this value of l_i in Eq. (5-1) and canceling terms gives

$$\epsilon = \frac{A_0 - A_i}{A_i} \tag{5-4}$$

But see also Eq. (5-9).

Compression tests are more difficult to make, and the geometry of the test specimens differs from the geometry of those used in tension tests. The reason for this is that the specimen may buckle during testing or it may be difficult to get the stresses distributed evenly. Other difficulties occur because ductile materials will bulge after yielding. However, the results can be plotted on a stress-strain diagram, too, and the same strength definitions can be applied. For many materials the compressive strengths are about the same as the tensile strengths. When substantial differences occur, however, as is the case with the cast irons, the tensile and compressive strengths should be stated separately.

Torsional strengths are found by twisting bars and recording the torque and the twist angle. The results are then plotted as a *torque-twist diagram*. By using the equations in Chap. 2 for torsional stress, both the elastic limit and the *torsional yield strength* S_{sy} may be found. The maximum point on a torque-twist diagram, corresponding to point U on Fig. 5-2, is T_u. The equation

$$S_{su} = \frac{T_u r}{J} \tag{a}$$

where r is the radius of the bar and J is the polar second moment of area, defines the *modulus of rupture* for the torsion test. Note that the use of Eq. (*a*) implies that Hooke's law applies to this case. This is not true, because the outermost area of the bar is in a plastic state at the torque T_u. For this reason the quantity S_{su} is called the modulus of rupture. It is incorrect to call S_{su} the ultimate torsional strength.

All of the stresses and strengths defined by the stress-strain diagram of Fig. 5-2 and similar diagrams are specifically known as *engineering stresses* and *strengths* or *nominal stresses* and *strengths*. These are the values normally used in all engineering de-

2.2 Pressure due to Aerosol Can Contents Release

2.2.1 Introduction

In a TRUPACT-III payload of one loaded SLB2, the number of unpunctured aerosol cans must be known to ensure that a potential full release of the contents from the cans is accounted for in the MNOP determination for the package. Due to the evacuation and backfill process that renders all unsealed layers of confinement non-flammable (and, therefore, any aerosol can content release into the vented void space of the package non-flammable), the presence of aerosol cans is controlled to determine a contribution to MNOP in the package. The deflagration model presented in Section 2.1, *Pressure due to Sealed Container Deflagration*, conservatively accounts for the potential release of flammable aerosol can contents and potential subsequent deflagration inside a sealed container.

Typically, the generating and packaging procedures used at TRU waste sites do not allow unpunctured aerosol cans to be packaged with the waste. While these items have been used at the sites, their possible presence in the SLB2 would be incidental to the waste stream (i.e., not primary components of the waste stream). It is unlikely that a full aerosol can would be present in the waste. Aerosol cans that have been used for their intended purpose would likely be only partially full or empty if present in the waste. However, unpunctured aerosol cans are conservatively assumed full and accounted for in the MNOP determination as outlined below.

2.2.2 Aerosol Can Contents, Size, and Pressure

The contents of an aerosol can consist of a "product" and a "propellant". Propellants can be broadly classified as fluorocarbons ($C_wH_xF_y$, $C_wH_xCl_yF_z$, $C_wBR_xCl_yF_z$), hydrocarbons (C_wH_x), ethers (C_wH_xO, $C_wH_xF_yO$), compressed gases (CO_2, N_2O, N_2, A, etc.), and methylene chloride (CH_2Cl_2). Hydrocarbons have been the dominant propellant type used for aerosol cans since 1979.[1] Hydrocarbon propellants are typically comprised of a mixture of propane and isobutane to achieve the desired pressure of the propellant. As the product of the aerosol can is expelled, the remaining liquid propellant turns to vapor, maintaining a virtually constant interior pressure until all of the propellant gas is exhausted. The physical properties of purified hydrocarbon propellants are provided in Figure 2.2-1.[1]

Aerosol cans are produced in different sizes and with varying materials of construction. The U.S. Department of Transportation (DOT) specification for metal aerosol containers define, among other parameters, a maximum product and/or contents pressure at 130 °F of 140, 160, and 180 psig for the Specification 2N (standard), 2P, and 2Q containers, respectively.[1] Figure 2.2-2 summarizes the U.S. and European standard sizes for three-piece aerosol cans, where the U.S. standard sizes range from 1-13/16 to 3 inches in diameter and 2 to 10-½ inches tall with a full volume capacity ranging from 141 to 872 ml.[1]

[1] Johnsen, Montfort A., *Aerosol Handbook* (2nd Edition), Industry Publications, Inc. 1982.

2.2.3 Percent Contribution to MNOP

An aerosol can potentially contributes to pressure in the TRUPACT-III CV via the mechanism of liquid-to-gas volume expansion of the released propellant. The aerosol can product does not contribute significantly due to the fact that it typically remains a liquid at room temperature and/or due to limitations in the pressure capacity of aerosol cans containing compressed gas and no liquid propellants. Although ethane has the largest dispersion coefficient (i.e., liquid-to-gas volume expansion) of hydrocarbon propellants, it can be concluded from the vapor pressure data provided in Figure 2.2-1 that ethane can only be utilized as a co-propellant in small quantities since its room temperature vapor pressure is above the pressure capacity of DOT spec containers. The hydrocarbon propellants with the next highest dispersion coefficients are propane and isobutane. The mixture of propane and isobutane required to achieve a pressure of 180 psig at 130 °F (327.6 K), consistent with a DOT spec 2Q container, can be determined from the proportion of partial pressures of each liquefied gas as follows (Figure 2.2-3 and Figure 2.2-4):[2]

Propane Partial Pressure	305 psi	×	29%	=	88.4 psig @ 130 °F
Isobutane Partial Pressure	129 psi	×	71%	=	91.6 psig @ 130 °F
Propellant Mixture Pressure					180 psig @ 130 °F

At room temperature (70 °F, 294.3 K) the pressure of the propane/isobutane propellant mixture is as follows:

Propane Partial Pressure	131 psi	×	29%	=	38.0 psig @ 70 °F
Isobutane Partial Pressure	44 psi	×	71%	=	31.2 psig @ 70 °F
Propellant Mixture Pressure					69.2 psig @ 70 °F

Aerosol cans typically have a product-to-propellant volume ratio of 3:1 (i.e., 75% product and 25% propellant)[3] with a total volume limited by the full capacity of the standard size aerosol can. Due to the variable nature of the products marketed in aerosol cans, it is conservatively assumed that 50% by volume of the aerosol can is comprised of the propellant mixture. Additionally, the volume capacity of aerosol cans is assumed as the largest standard size of U.S. cans, 872 ml, given in Figure 2.2-2.

For a 211x1008 (i.e., Ø2-11/16 in. x 10-08/16 or 10-1/2 in. tall) standard aerosol can, the liquid volume of propellant is equal to 50% of 872 ml, or 436 ml. Based on the 29% propane / 71% isobutane mixture and using the liquid-to-gas volumetric dispersion ratios for each, the total released gas volume at 1 atm and 70 °F is calculated as follows:

$$V_{ac\_70F} = (0.436 \text{ liters})[(0.29 \times 272.3) + (0.71 \times 229.3)] = 105.4 \text{ liters @ } 70\ ^{\circ}\text{F}$$

Conservatively excluding any void volume within the SLB2, the available void volume to accommodate the aerosol can release is assumed to be equal to the void volume outside of the SLB2 and inside the TRUPACT-III CV (Section 2.1.1.4, *Percent Contribution to MNOP*), $V_{cv\_void} = 2{,}354$ liters.

---

[2] Air Liquide, *Gas Encyclopaedia*, New York, Elsevier Science Publishing, 1976.

[3] National Institutes of Health, *Household Products Database*, http://householdproducts.nlm.nih.gov/ingredients.htm

The 105.4 liters of released aerosol gas is heated to the bulk average void volume (gas) temperature of 145.4 °F (63.0 °C, 336.2 K) based on 80 watts as summarized in Table 2.3-1. The released aerosol gas would occupy a volume, V_{ac}, of:

$$V_{ac} = (105.4 \text{ liters})\left(\frac{336.2 \text{ K}}{294.3 \text{ K}}\right) = 120.4 \text{ liters @ } 145.4 \text{ °F}$$

The release of aerosol gas (adjusted for heat-up to normal conditions) from one full aerosol can into the TRUPACT-III CV void space contributes a pressure, P_{ac}, of:

$$P_{ac} = \left(\frac{120.4 \text{ liters}}{2{,}354 \text{ liters}}\right) = 0.051 \text{ atm } (0.75 \text{ psia}) \text{ @ } 145.4 \text{ °F}$$

Therefore, the percent contribution to MNOP from aerosol can contents release into the payload is given as a function of the number of aerosol cans, N_{ac}, as follows:

$$\%_{mnop} = \left(\frac{N_{ac} \times P_{ac}}{25 \text{ psig}}\right) \times 100 = 3.0 \times N_{ac}$$

The above equation conservatively accounts for aerosol can content release in the payload by assuming all aerosol cans are full, utilizing a propellant mixture consistent with the highest pressure capacity DOT spec container, assuming a 50% by volume propellant fill of the largest standard size aerosol can, and ignoring void space available for gas expansion inside the SLB2. Table 2.2-1 summarizes the percent contribution to MNOP as a function of the number of aerosol cans in the TRUPACT-III payload.

Physical Properties of Purified Hydrocarbon Propellents

Property	Ethane*	Propane	Isobutane	N-butane	Isopentane*
Formula	C_2H_6	C_3H_8	C_4H_{10}	C_4H_{10}	C_5H_{12}
Molecular Weight	30.06	44.09	58.12	58.12	72.15
Vapor Pressure (psig at 70°F)	543	109.3	31.1	16.92	-3.5
Freezing Point (°F) (1 atm.)	-297.6	-305.9	-255.3	-216.9	-255.8
Boiling Point (°F) (1 atm.)	-127.5	-43.7	10.9	31.1	82.2
Specific Gravity (liquid) (60°F)	0.35	0.508	0.563	0.584	0.620
Specific Gravity (gas) (60°F) (Air = 1)	1.02	1.55	2.01	2.08	2.61
Critical Temperature (°F)	90.1	206.2	274.6	305.6	370.0
Critical Pressure (psig)	707.1	616.1	528.1	550.1	482.6
Critical Density (g/ml)	0.203	0.220	0.221	0.228	0.234
Flash Point (°F)	<-200	-156	-117	-101	<-60
Lower Explosive Limit (v% in air)	3.12	2.20	1.78	1.84	1.39
Upper Explosive Limit (v% in air)	15.0	9.51	8.40	8.48	7.97
Heat of Combustion (BTU/lb.)	22,190	21,620	21,298	21,318	21,102
Dispersion (Gas at 1 atm and 70°F)					
From 1 g (ml)	793	540.2	414.0	400.6	na
From 1 ml (ml)	276 est.	272.3	229.3	233.9	na
Solubility of Water in Propellent (70°F)	0.031	0.0168	0.0088	0.0075	0.0063
Solubility of Propellent in Water (70°F) (w% at 1 atm)	0.008	0.0079	0.0080	0.0080	0.0084

*Usually considered as co-propellents — present in commercial propellents.

Figure 2.2-1 – Physical Properties of Purified Hydrocarbon Propellants

Standard Sizes For Three-Piece Aerosols

U.S.A. Nominal Dimensions	European I.S.O.* Dimensions	European Commercial Description	Area Where Used	Brimful Capacity Fl. Oz.	ml
113 × 313	45 × 97	140.045	U.S.A. & Europe	4.77	141
113 × 411	45 × 119	175.045	U.S.A. & Europe	5.95	176
113 × 509	45 × 140	210	U.S.A. & Europe	7.10	210
202 × 200	52 × 50	100.052	U.S.A.	3.5	102
202 × 213	52 × 72	140.052	Europe**	4.9	142
202 × 214	52 × 73	145.052	U.S.A.	5.0	147
202 × 307.5	52 × 88	175.052	Europe**	6.0	177
202 × 314	52 × 98	190.052	U.S.A.	6.8	192
202 × 402.5	52 × 105	210.052	Europe	7.2	212
202 × 405 ni	52 × 109 ni	210.052 ni	Europe	7.2	212
202 × 406	52 × 111	225.052	U.S.A.	7.6	226
202 × 413	52 × 122	245.052	U.S.A.	8.3	246
202 × 503.5	52 × 132	270.052	Europe	9.2	272
202 × 506 ni	52 × 136 ni	270.052 ni	Europe	9.2	272
202 × 509	52 × 141	290.052	U.S.A.	9.8	290
202 × 514 dni	52 × 149 dni	300.052 dni	U.S.A.	10.2	301
202 × 605.5	52 × 161	335.052	Europe	11.4	337
337 × 508 ni	52 × 165 ni	335.052 ni	Europe	11.4	337
202 × 700	52 × 177	365.052	U.S.A.	12.4	367
202 × 708	52 × 190	390.052	U.S.A.	13.4	391
202 × 711	52 × 195	405.052	Europe	13.8	407
202 × 804	52 × 209	450.052	Europe	15.2	450
205 × 409.5 ni	57 × 117 ni	270.057 ni	Europe	9.2	272
205 × 508 ni	57 × 140 ni	335.057 ni	Europe	11.4	337
205 × 607.5 ni	57 × 164 ni	405.057 ni	Europe	13.8	407
205 × 802.5 ni	57 × 207 ni	520.057 ni	Europe	17.7	522
205 × 1020 ni	57 × 257 ni	650.057 ni	Europe	22.1	652
207.5 × 413	60 × 122	330.060	U.S.A.	11.3	332
207.5 × 509	60 × 141	390.060	U.S.A.	13.2	389
207.5 × 512	60 × 146	405.060	Europe**	13.7	407
207.5 × 605	60 × 160	450.060	U.S.A. & Europe	15.3	452
207.5 × 701	60 × 179	500.060	U.S.A. & Europe	16.8	498
207.5 × 705.5	60 × 186	520.060	Europe	17.7	522
207.5 × 708	60 × 190	525.060	U.S.A.	17.9	527
207.5 × 713	60 × 198	540.060	U.S.A.	18.4	541
207.5 × 903	60 × 252	650.060	Europe	22.1	652
211 × 407.5	65 × 113	375.065	U.S.A.	12.6	373
211 × 410.5	65 × 118	395.065	Europe	13.4	397
211 × 413	65 × 122	405.065	U.S.A. & Europe	13.7	404
211 × 510	65 × 142	470.065	U.S.A.	16.0	472
211 × 604	65 × 157	520.065	U.S.A. & Europe	17.8	522
211 × 612	65 × 171	565.065	U.S.A.	19.2	567
211 × 612 dni	65 × 171 dni	560.065 dni	U.S.A. - Exptl.	18.9	559
211 × 702	65 × 181	600.065	Europe	20.4	602
211 × 711	65 × 195	650.065	Europe	22.1	652
211 × 713	65 × 198	655.065	U.S.A.	22.3	657
211 × 808	65 × 215	720.065	U.S.A.	24.3	720
211 × 908	65 × 238	795.065	U.S.A.	26.9	796
211 × 909	65 × 240	800.065	Europe	27.2	802
211 × 1008	65 × 266	870.065	U.S.A.	29.5	872
211 × 1114	65 × 300	1000.000	Europe	33.9	1002
300 × 709	76 × 192	795.076	U.S.A.	26.9	796
300 × 709 ni	76 × 192 ni	780.076	U.S.A. - Exptl.	26.4	781

Figure 2.2-2 – Standard Sizes for Three-Piece Aerosols

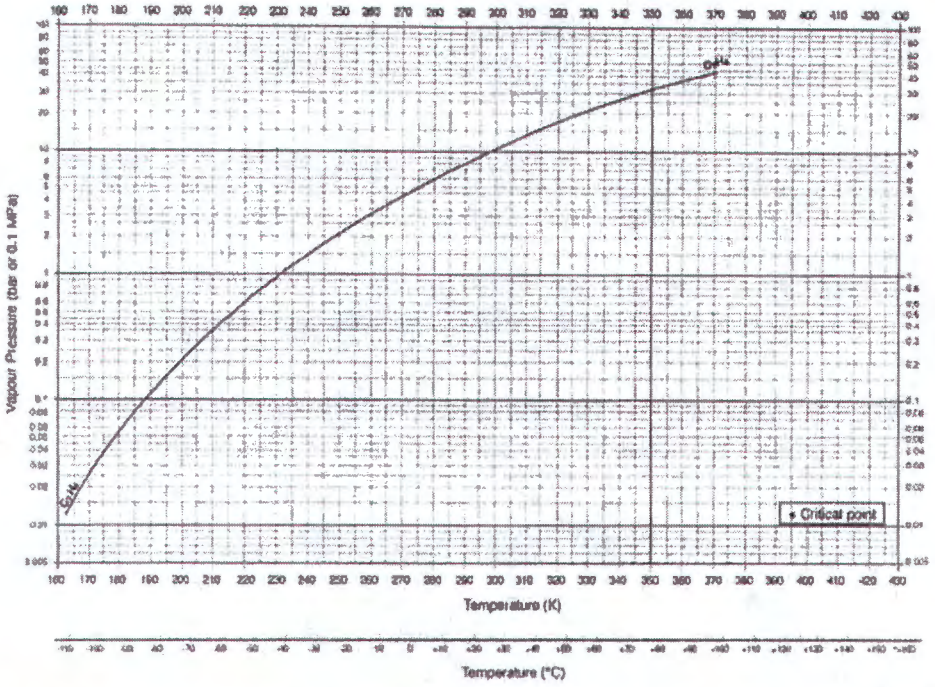

Figure 2.2-3 – Propane Vapor Pressure as a Function of Temperature

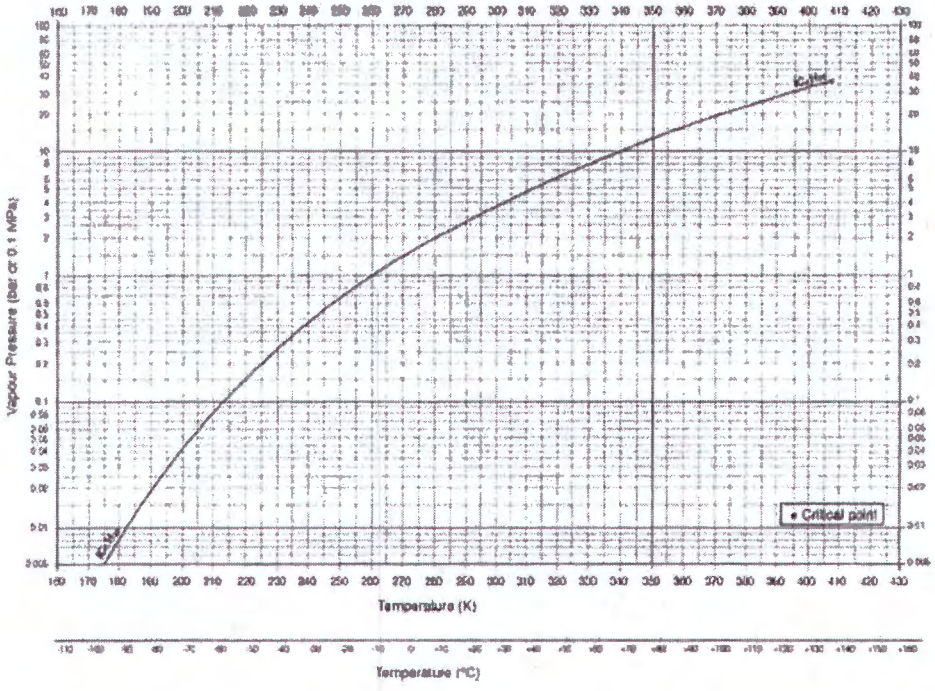

Figure 2.2-4 – Isobutane Vapor Pressure as a Function of Temperature

Table 2.2-1 – Percent Contribution to MNOP from Aerosol Can Release

No. of Aerosol Cans	$\%_{mnop}$
1	3
2	6
3	9
4	12
5	15
6	18
7	21
8	24
9	27
10	30
11	33
12	36
13	39
14	42
15	45
16	48
17	51
18	54
19	57
20	60
21	63
22	66
23	69
24	72
25	75
26	78
27	81
28	84
29	87
30	90
33	99

BNFL Inc.

Mechanical Data Sheet

Project:	AMWTP	Site:	Idaho Falls	Data Sheet No.:	DZ410283
Project No.:	K0105C	Area:	Supercompactor Cell	No. Installed:	1
PI No.:	Z-410-283	Category:	UBC PC 2	% Duty:	On Demand
Description:	Supercompactor Glovebox	System No.:	410		
Function:	To provide a Zone 3 containment to prevent release of radioactivity and toxic substances whilst the process is carried out.				

SUMMARY DATA	UNITS	
Maximum Duty	hp	N/A
Design Life	year	15
Failure on Demand	-	N/A
Minimum Design Pressure	in. wg	-4 (Glovebox test depression)
Maximum Design Pressure	in. wg	+4 (Test pressure)
Minimum Design Temperature	°F	50
Maximum Design Temperature	°F	104
Length	ft & in.	9'- 7" Approx. 115
Width	ft & in.	6'- 8" Approx. 80 50 ft³
Height	ft & in.	9'- 10" Approx. 7-10" 94
Estimated Weight	lb	5170
Materials and Construction	Stainless Steel	
Maintenance	Maintainable components shall be of modular design/construction and allow rapid access for maintenance and removal/replacement if necessary. Maintenance of components will be done through glove ports.	

Description:
The supercompactor glovebox joins the top and bottom flanges of the press to form containment. The trolley passes over the bottom flange interface. The top edge to have a stainless steel bellows fitted to allow press expansion.

Inputs:	lidded drums for compaction
Outputs:	Compacts (pucks)
Interfaces:	Infeed Glovebox, Puck recovery glovebox, and supercompactor press
Operating Environment:	Zone 3, alpha contaminated
Services:	Electricity (Power & Control), pneumatic supply (80 psig ± 5%)

Date	Issue	By	Checked	Approved	Purpose of Issue
04/23/07	02	J. Godak	E. Calvert	D. Yew	For permit
01/12/01	01	M. Green	E. Calvert	D. Yew	For permit
11/22/00	00	S. Mason	E. Calvert	D. Yew	For permit

BNFL Inc.

Mechanical Data Sheet

Description: Supercompactor Glovebox	Site: Idaho Falls	Data Sheet No.: DZ410283

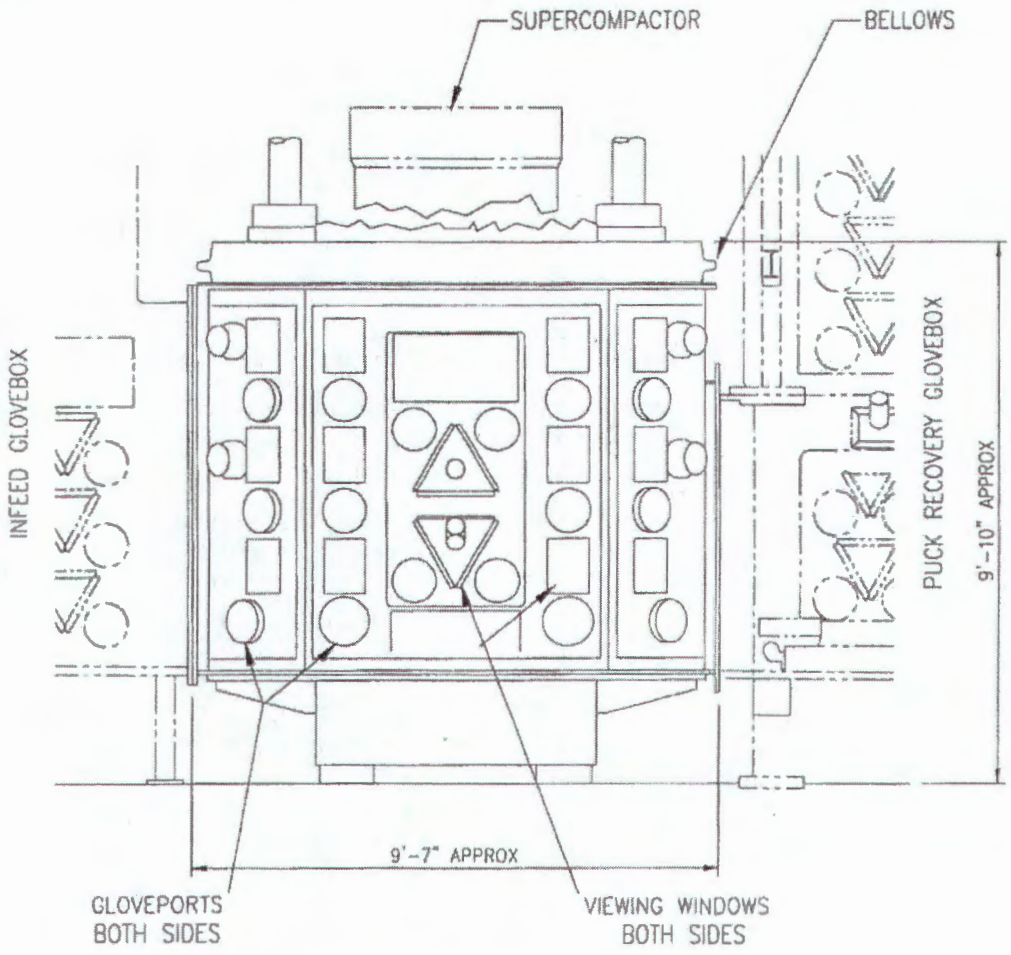

FRONT ELEVATION (LOOKING NORTH)

BNFL Inc.

Mechanical Data Sheet

Project:	AMWTP	Site:	Idaho Falls	Data Sheet No.:	DZ410211
Project No.:	K0105C	Area:	Supercompaction Cell	No. Installed:	1
PI No.:	Z-410-211	Category:	UBC PC 2	% Duty:	On Demand
Description:	Supercompactor Infeed Glovebox	System No.:	410		
Function:	To provide a Zone 3 containment to prevent the release of radioactivity and toxic substances whilst the process is carried out.				

SUMMARY DATA	UNITS	
Maximum Duty	hp	N/A
Design Life	year	15
Failure on Demand	-	N/A
Design Capacity	drums per 24 hour	160 (max)
Minimum Design Pressure	in. wg	-4 (Glovebox test depression)
Maximum Design Pressure	in. wg	+4 (Test pressure)
Minimum Design Temperature	°F	50
Maximum Design Temperature	°F	104
Infeed Glovebox Dimensions	ft & in.	See sheet 2 670 ft³
Estimated Weight	lb	21000
Materials and Construction	Stainless Steel	
Maintenance	Maintainable components shall be of modular design/construction and allow rapid access for maintenance and removal/replacement if necessary. Maintenance of components will be done through glove ports.	

Description:
High integrity sealed glovebox, which will contain infeed conveyor, infeed turntable, drum elevator door, drum handler, compaction trolley, drum piercing station.

Inputs:	Lidded drums to Supercompactor
Outputs:	Lidded drums to Supercompactor
Interfaces:	Central Conveying System, Supercompactor, North Venturi Glovebox, Infeed Airlock Door Glovbox, Drum Piercing Glovebox
Operating Environment:	Zone 3, alpha contaminated
Services:	Electricity (power and control), pneumatic supply (80 psig ± 5%)

Date	Issue	By	Checked	Approved	Purpose of Issue
5/17/04	05	T. Kelly	[signature]	[signature]	For CCR
10/27/03	04	S. Schulthies	Richard Beck	Phil Leatherbarrow	Issue for permit - CCR
06/01/01	03	M. Ogden	K. Shaw	D. Yew	For permit
02/08/01	02	L Markiewka	K. Shaw	D. Yew	For permit
01/12/01	01	M. Green	E. Calvert	D. Yew	For permit
11/22/00	00	S. Mason	E. Calvert	D. Yew	For permit

BNFL Inc.

Mechanical Data Sheet

Description:	Supercompactor Infeed Glovebox	Site:	Idaho Falls	Data Sheet No.:	DZ410211

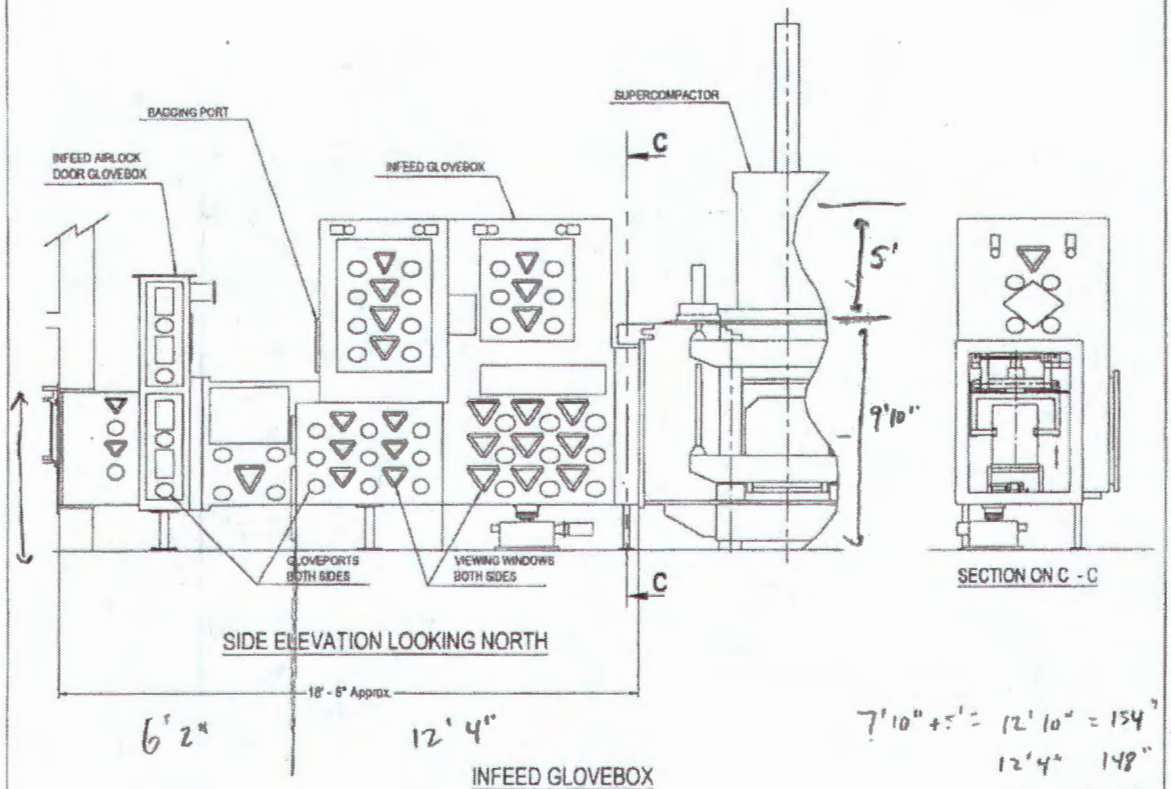

7'10" + 5' = 12'10" = 154"
12'4" 148"
3'4" 40"
} 527 ft³

7' = 84"
6'2" = 72" } 140 ft³
3'4" = 40"

670 ft³

BNFL Inc.

Mechanical Data Sheet

Description:	Supercompactor Infeed Glovebox	Site:	Idaho Falls	Data Sheet No.:	DZ410211

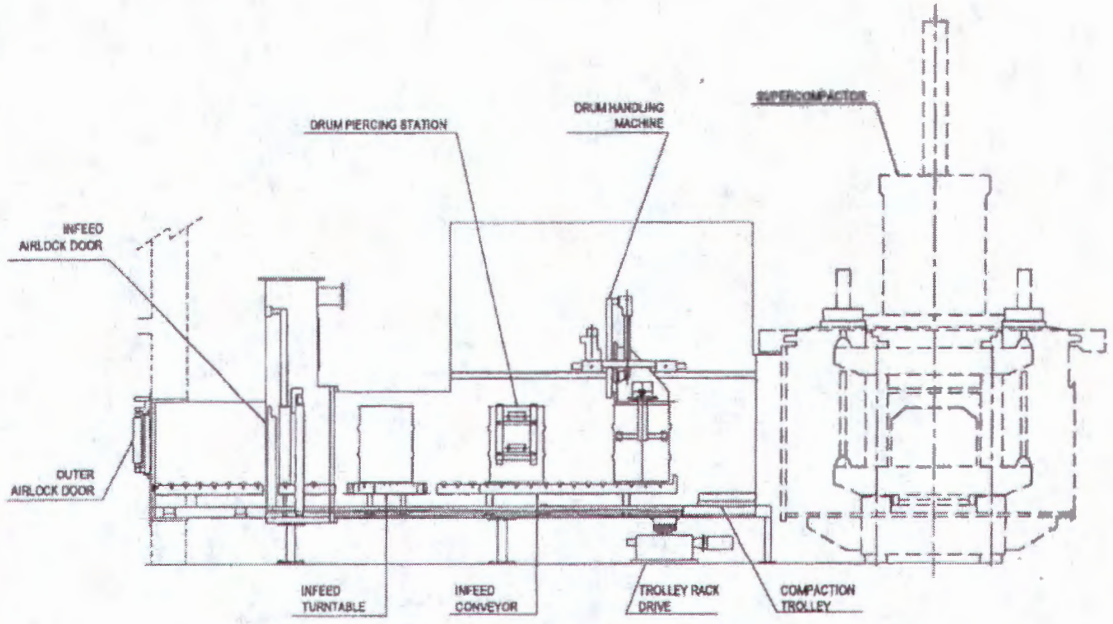

CROSS SECTION THROUGH INFEED GLOVEBOX

BNFL Inc.

Mechanical Data Sheet

Project:	AMWTP	Site:	Idaho Falls	Data Sheet No.:	DZ410284
Project No.:	K0105C	Area:	Supercompaction Cell	No. Installed:	1
PI No.:	Z-410-284	Category:	UBC PC 2	% Duty:	On Demand
Description:	Puck Recovery Glovebox	System No.:	410		
Function:	Connects the upper puck handler area glovebox and the press glovebox and allows a separate area for puck recovery.				

SUMMARY DATA	UNITS	
Maximum Duty	hp	N/A
Design Life	year	15
Failure on Demand	-	N/A
Minimum Design Pressure	in. wg	-4 (Glovebox test depression)
Maximum Design Pressure	in. wg	+4 (Test pressure)
Minimum Design Temperature	°F	50
Maximum Design Temperature	°F	104
Length	ft & in.	4'-6" Approx. 9'
Width	ft & in.	3'- 4" Approx. 3.33') 165ft3
Height	ft & in.	7'- 0" Approx. 5.5'
Estimated Weight	lb	12,000
Materials and Construction	Stainless Steel	
Maintenance	Maintainable components shall be of modular design/construction and allow rapid access for maintenance and removal/replacement if necessary. Maintenance of components will be done through glove ports.	

Description:
The Puck Recovery Glovebox will contain puck transfer equipment and tools to allow re-working of puck to enable subsequent satisfactory puck handling operation.

Inputs:	Pucks, Liquid
Outputs:	Pucks, Liquid
Interfaces:	Supercompactor Glovebox, Post Compaction Glovebox
Operating Environment:	Zone 3, alpha contaminated, some puck spillage
Services:	Electricity (Power & Control), pneumatic supply (80 psig ± 5%)

Date	Issue	By	Checked	Approved	Purpose of Issue
5/17/04	03	T. Kelly			For CCR
10/27/03	02	S. Schulthies	Richard Beck	P. Leatherbarrow	Issue for permit - CCR
01/12/01	01	M. Green	E. Calvert	D. Yew	For permit
11/15/00	00	S. Mason	E. Calvert	D. Yew	For permit

BNFL Inc.

Mechanical Data Sheet

Description: Puck Recovery Glovebox	Site: Idaho Falls	Data Sheet No: DZ410284

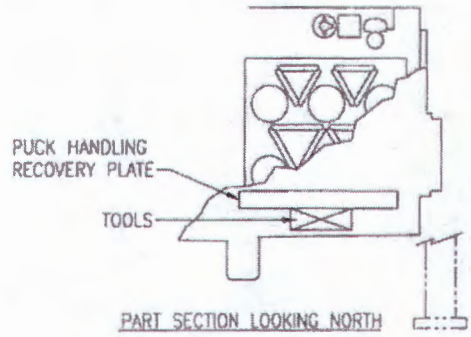

PART SECTION LOOKING NORTH

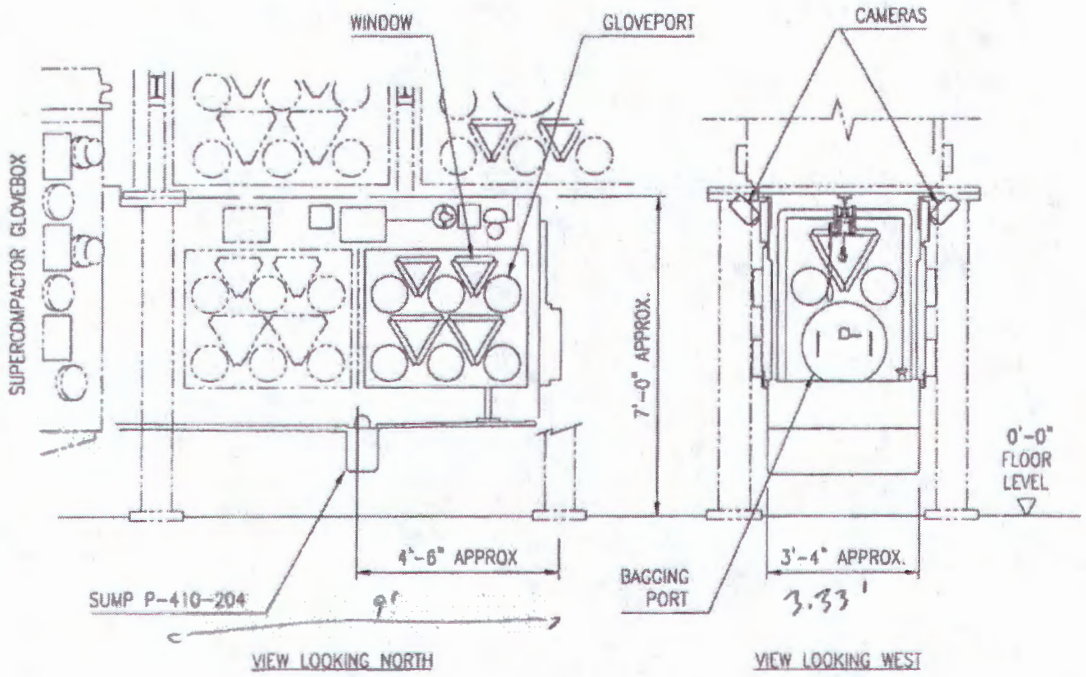

VIEW LOOKING NORTH

VIEW LOOKING WEST

PUCK RECOVERY GLOVEBOX

EDF-0766
Reference 4
Page 26 of 27

NOTE :
ALL CUSTOMER INTERFACES ARE
WIREMOLD C1600 6" x 6" WIREWAYS

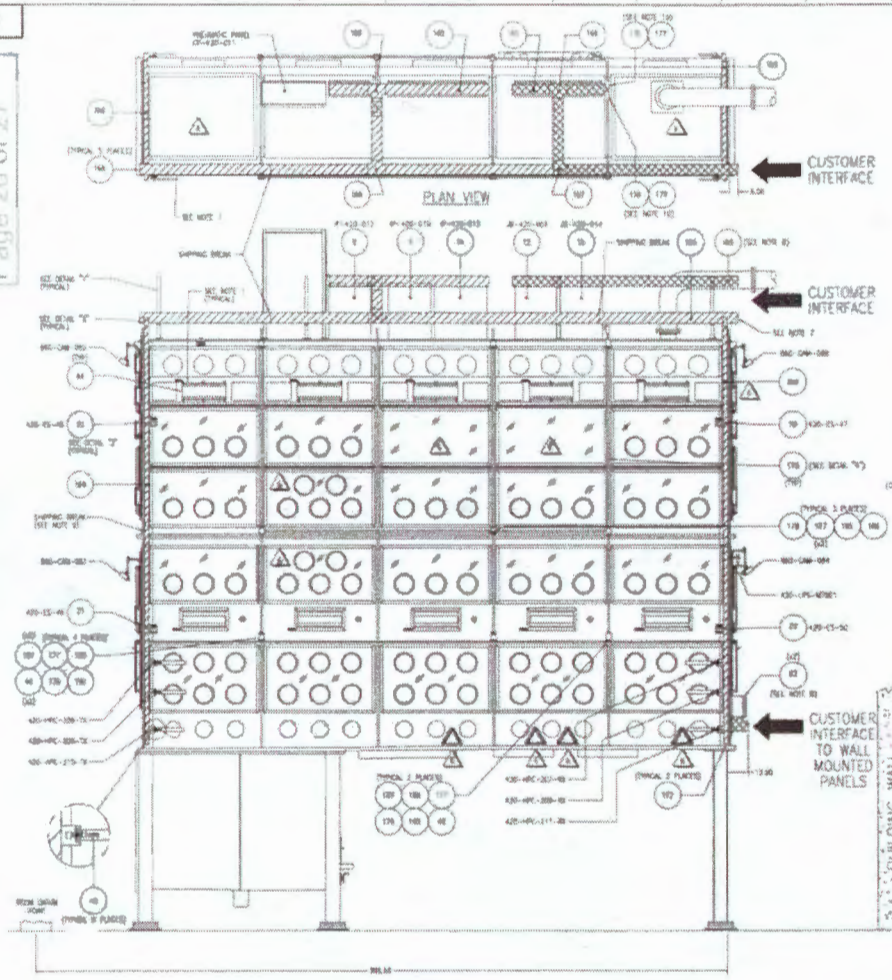

NORTH ELEVATION

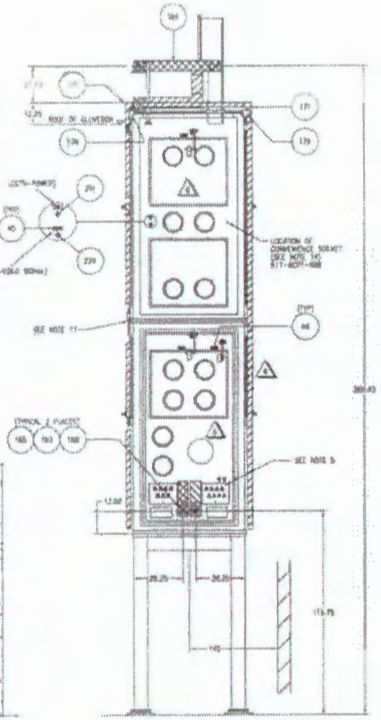

WEST ELEVATION

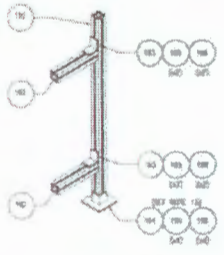

DETAIL "1" – WIREWAY SUPPORT

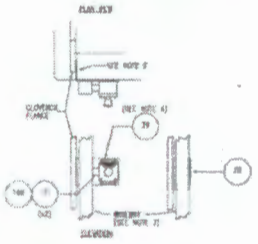

DETAIL "2" – WIREWAY & PUSHBUTTON MOUNTING PLATES

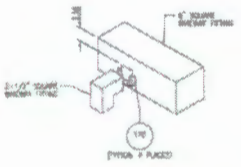

DETAIL "3" – WIREWAY PANEL FLANGE & CUT-OUT DETAIL

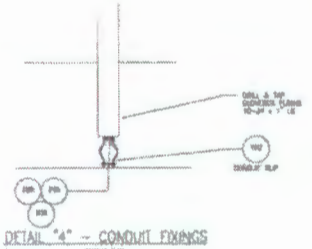

DETAIL "4" – CONDUIT FIXINGS

NOTES

1. FOR DETAILS OF FLUORESCENT LIGHT FITTING ASSEMBLY, REFER TO DRAWING A0K7206.
2. DRILL & TAP GLOVEBOX FLANGE 1/4"-20, AND 1/4" MOUNTING PLATES (ITEMS 78 & 79) USING 10MM SCREWS, 301 & 303 AS REQUIRED.
3. FOR WIREWAY TO GLOVEBOX FLANGE AT TOP & BOTTOM OF RUN SEE MOUNTING PLATE ITEM 78.
   FOR WIREWAY TO GLOVEBOX FLANGE AT PUSHBUTTON LOCATIONS SEE MOUNTING PLATE ITEM 79.
   FIX WIREWAY TO MOUNTING PLATES (ITEMS 78 & 79) USING 10MM SCREWS, 208, 209 & 210 AS REQUIRED.
4. FIX PUSHBUTTON TO MOUNTING PLATE (ITEM 79) USING 10MM SCREWS, 205, 206 & 207 AS REQUIRED.
5. FOR DETAILS OF GLOVEBOX PENETRATIONS SEE SHEET 3.
6. FOR DETAILS OF GLOVEBOX CUT-OUTS SEE SHEET 3.
7. SECTIONS OF BASIC CONTROL WIREWAY INDICATED, TO BE REASSEMBLED FOR SHIPPING PURPOSES.
8. SECTION OF TERMINATING POWER WIREWAY INDICATED TO BE REMOVED DURING SHIPPING.
9. VERTICAL SECTIONS OF WIREWAY JOINING TOP & BOTTOM SECTIONS OF GLOVEBOX TO HAVE 12" SECTION REMOVABLE FOR SHIPPING PURPOSES.
   ALL CABLES CONNECTED TO INSTRUMENTS LOCATED ON BOTTOM SECTION OF GLOVEBOX, TO BE DISCONNECTED & COILED UP ON TOP SECTION, READY FOR RE-CONNECTION ON FINAL ASSEMBLY.
10. CONDUIT FITTINGS ON TOP OF GLOVEBOX TO BE REMOVABLE FOR SHIPPING PURPOSES.
11. CONDUIT TO BE DISCONNECTED BETWEEN TOP & BOTTOM GLOVEBOX SECTIONS FOR SHIPPING PURPOSES. ALL CABLES/CORES CONNECTED TO INSTRUMENTS LOCATED ON BOTTOM SECTION OF GLOVEBOX, TO BE DISCONNECTED & COILED UP ON TOP SECTION, READY FOR RE-CONNECTION ON FINAL ASSEMBLY.
12. FIX CONDUIT TO GLOVEBOX FLANGE AS PER DETAIL "4" AS REQUIRED.
    SOCKET OUTLETS / CONDUIT OUTLET BOXES ARE NOT FIXED DIRECT TO GLOVEBOX FLANGES, BUT ARE SUPPORTED BY THE RIGID CONDUIT THAT CONNECTS INTO THEM.
13. FLOOR MOUNT BASEPLATES (ITEM 184) TO BE FIXED TO GLOVEBOX WITH 10MM SCREWS 205 & 207 AS REQ'D. 1/4"-20 x 3/4" LG SCREWS TO BE FIXED TO GLOVEBOX FLOOR ON ASSEMBLY AS REQUIRED.
14. CONVENIENCE SOCKETS TO BE INSTALLED AS PER SEC WAY1301, ITEM 7.7 WITH COUPLING IN LOCATION INDICATED.

KEY

- 415VAC / 480VAC POWER CABLES
- 24VDC CONTROL / 415V / SAFETY CABLES
- 0 CONTROL CABLES

REFERENCE DRAWINGS

DRAWING NO	DRAWING TITLE
[illegible]	[illegible]

ADVANCED WASTE WATER TREATMENT PROJECT
HNEL – DSRL/GB

POST COMPACTION GLOVEBOX C,E&I SYSTEM 420 LAYOUT (SHEET 1 OF 7)

RTS WRIGHT

RTS DRAWING No. E01005100021 REV 6

Gas Properties CO_2

Molecular Weight

Molecular weight : 44.01 g/mol

Solid phase

Latent heat of fusion (1,013 bar, at triple point) : 84.3 Btu/lb
Solid density : 97.512 lb/ft^3

Liquid phase

Liquid density (at -20 °C (or -4 °F) and 19.7 bar) : 64.425 lb/ft^3
Liquid/gas equivalent (1.013 bar and 15 °C (per kg of solid)) : 8.45 vol/vol
Boiling point (Sublimation) : -109.3 °F
Latent heat of vaporization (1.013 bar at boiling point) : 245.52 Btu/lb
Vapor pressure (at 20 °C or 68 °F) : 848.47082 psi

Air Liquide, Gas Encyclopedia

DIVIDER

PAGE

RECORD
CMC 11/19/2012

AMWTP Advanced Mixed Waste Treatment Project

AK Source Document Review Summary

Form-1068, Rev. 4
Effective: 01/08/09
Page 1 of 1

Implementing Document: MP-TRUW-8.13

1. Source Document Tracking Number: D094A	2. Revision: 1

3. **Category**

- ☐ Published Documentation
- ☐ Unpublished Documentation
- ☐ Correspondence
- ☑ Discrepancy

4. **Title/Description Information:** Discrepancy Report relating to ANL-E, INL and AMWTP historical waste identification using content code Vs IDC over time.

Document Number: D094A
Revision: 0
Author: Tim Venneman
Date: 11/15/12

5. AK Element	6. Generator Or Waste Type(s)	7. Location in Source Doc.	8. AK Information Summary:
WM4, WM6	AE	All	Discrepancy report addresses use of content codes for early waste management at ANL-E and assignment of IDCs after waste was shipped to INL.
WS1, WS5	AE-100, AE-101, AE-102, AE-104, AE-105, AE-106, AE-107, AE-110, AE-111, AE-120, AE-121	All	Discrepancy report addresses use of content codes for early waste management at ANL-E and assignment of IDCs after waste was shipped to INL.

9. **Document Summary:**

The document discusses the initial (early) management of AMWTP ANL-E legacy waste using content codes in relation to the subsequent AMWTP management of ANL-E waste by IDC.

Information on SWEPP reclassification is also noted.

10. **Source Document Data Limitations (if any):**

Identification and management of ANL-E early (legacy) waste by content code vs. IDC is complex.

11. AK Expert:	Julie Collins (Print)	Julie Collins (Sign)	11/19/2012 (Date)

Implementing Document: MP-TRUW-8.13

Waste Generator: AMWTP (BN)	
Source Document Tracking Number: D094A	Revision No.: 0

Document Title/Description: Discrepancy Report relating to ANL-E, INL and AMWTP historical waste identification using content code vs. IDC over time. ANL-E wastes contain waste from site-wide ANL-E laboratory operation. ANL-E waste identified as IDCs: AE-100, AE-101, AE-102, AE-104, AE-105, AE-106, AE-107, AE-110, AE-120 and AE-111 and AE-121 may not have been segregated during early years of operation.

During the early years of operation, ANL-E identified their waste by content code and not by item description codes (IDCs).The identification of IDCs did not occur until later. IDCs (e.g., "AE-XYZ" etc.) were assigned to their waste by INL based on very general generator supplied waste descriptions.

Prior to the mid 1980's absorbed liquids (organic and inorganic) were identified as content code 102. Commingling of waste identified as content code 102 occurred at ANL-E because waste was often generated in small volumes (i.e., less than 55 gallons). The content code 102 was a "catch-all" code for ANL-E homogenous solids. This same type of management also applied to ANL-E heterogeneous debris waste. Content code 100 waste the general "catch-all" code for ANL-E heterogeneous debris waste

For example, the IDC AE-102 was originally assigned by INL to containers identified as having the content code of 102. Later on The IDCs AE-111 and AE-121 may have been assigned to some of the containers that were previously identified as IDC AE-102 during SWEPP pre-certification activities.

AE-111 was first identified originated in the late 1980's and early 1990's during RWMC SWEPP operations. The RWMC SWEPP facility was used to pre-certify CH-TRU waste stored in the TSA-RE. Waste certified during this time period was to be stored until the WIPP site was operational. During this time wastes that were previously identified as AE-102 IDC were identified as AE-111 (Solidified Wet Sludge). The waste is assumed to be the same as AE-102

AE-121 was first identified in the late 1980's and early 1990's during RWMC SWEPP operations. The RWMC SWEPP facility was used to pre-certify CH-TRU waste stored in the TSA-RE. Waste certified during this time period was to be stored until the WIPP site was operational. During this time wastes that previously were identified as AE-102 IDC were identified as AE-121 (TRU Organic Solid Waste).

ANL-E debris waste was originally segregated by combustibles/non-combustibles. As with the ANL-E homogenous solids, heterogeneous debris was managed based on content codes, content codes served as waste identification for purposes of shipment/management during the early years of operation. IDCs were subsequently assigned to ANL-E waste by INL based on general information supplied by the generator.

AE-100: This IDC was developed and assigned to ANL-E waste based on the content code 100 that was originally assigned by ANL-E to the waste.

AE-101: This IDC was developed and assigned to ANL-E waste based on the content code 101 that was originally assigned by ANL-E to the waste. The waste contains similar material inputs as AE-100 wastes (e.g., the waste includes similar waste forms that are also identified within IDC AE-100 and/or as content code 100).

AE-104: This IDC was developed and assigned to ANL-E waste based on the content code 104 that was originally assigned by ANL-E to the waste. The waste contains similar material inputs as AE-100 wastes (e.g., the waste includes similar waste forms that are also identified within IDC AE-100 and/or as content code 100).

AE-106: This IDC was developed and assigned to ANL-E waste based on the content code 106 that was originally assigned by ANL-E to the waste. The waste contains similar material inputs as AE-100 wastes (e.g., the waste includes similar waste forms that are also identified within IDC AE-100 and/or as content code 100).

AE-107: This IDC was developed and assigned to ANL-E waste based on the content code 107 that was originally assigned by ANL-E to the waste. The waste contains similar material inputs as AE-100 wastes (e.g., the waste includes similar waste forms that are also identified within IDC AE-100 and/or as content code 100).

AE-110: This RWMC SWEPP-identified IDC was associated with heterogeneous debris previously identified as content code 100 or as IDC AE-100. The waste is contains similar material inputs as AE-100 wastes (e.g., the waste includes similar waste forms that are also identified within IDC AE-100 and/or as content code 100).

AE-120: This RWMC SWEPP-identified IDC was associated with heterogeneous debris previously identified as content code 100 or as IDC AE-100. The waste is considered to have the same material inputs as AE-100 wastes (e.g., the waste includes similar waste forms that are also identified within IDC AE-100 and/or as content code 100).

References:

Associated Source Document Tracking Number	Source Document Title	Document No./ Rev. No.	Author	Date	Page No.
C1023A	Estimated Waste Stream Volumes and Waste Material Parameter Weights for 2011 Annual Transuranic Waste Inventory Report Update - ECT-001-11	ECT-001-11 / 0	Elizabeth C. Thiel	04/04/2011	All
P024A	Content Code Assessments for INEL Contact-Handled Stored Transuranic Wastes	WM-F1-82-021 / N/A	T. L. Clements, Jr.	10/00/1982	All
P1351A	Inventory Analysis of Stored Transuranic (TRU) Waste at the Radioactive Waste Management Complex (RWMC)	WM-PD-90-003 / 0	K. P. Guay, INEL, EG&G	04/30/1990	

Associated Source Document Tracking Number	Source Document Title	Document No./ Rev. No.	Author	Date	Page No.
P303A	Description of the SWEPP Certified Waste Sampling Program. RWMC-EDF-363, Rev. 0, May 19, 1989. Rev. 7, April 16, 1997. Rev. 8, Not Dated. Rev. 9, Not Dated. Rev. 11, July 28, 1998. Rev. 12, April 20, 1999. Rev. 13, Not Dated. Rev. 14, March 28, 2000. Rev. 15, June 28, 2000. Rev. 16, December 5, 2000. Rev. 17, August 2, 2001. Rev. 18, August 2, 2002. Rev. 19, August 29, 2002. Rev. 20, October 22, 2002. Rev. 21, November 20, 2002.	RWMC-EDF-363 / 21	J.J. Einerson (Rev 21) - BBWI Document Control and EDMS.	11/20/2002	
P364A	Estimated Earthen and Geofabric Covered TRU Waste Inventory in the TSA at Radioactive Waste Management Complex (RWMC)	INEL-95/194 (RWMC EDF# 837) / 0	J. R. Wixson	08/24/1995	All
P365A	Waste Description Information for Transuranically-Contaminated Wastes Stored at the Idaho National Engineering Laboratory (includes Appendices A and B documents and a letter from John H. Kolts, DOE-ID to Frank Yaklich, BNFL Inc).	INEL-95/0412 / 0	B. D. Raivo, G. K. Becker, T. H. Smith, and G. L. Anderson	12/01/1995	All
P399A	AMWTP Waste Matrix Code Reference Manual	RPT-TRUW-05 / Cur Rev	Generated for the AMWTP Project.	CUR DATE	All
P567A	INEEL Stored Contact-Handled Transuranic Waste Volumes; Idaho National Engineering and Environmental Laboratory; EDF-2550, Rev 0; September 30, 2002	EDF-2550 / 0	C.J. Barnard	09/30/2002	
U120A	Inventory Analysis of Stored Transuranic (TRU) Waste at the Radioactive Waste Management Complex (RWMC).	INEL-96/0308 / 0	K. M. Croft and V. S. Scown.	11/00/1996	

Implementing Document: MP-TRUW-8.13

Associated Source Document Tracking Number	Source Document Title	Document No./ Rev. No.	Author	Date	Page No.
U325S	ANL-E TWMIS	N/A / 0	AMWTP	12/07/2011	All

Nature of Discrepancy: AMWTP legacy ANL-E wastes are the result of the site-wide historical ANL-E laboratory operation. The ANL-E lab operation included: routine analysis/testing/experiments, small one time experiments and/or analysis, supporting maintenance and D&D operations. ANL-E waste were originally identified/managed under a general content code classification (e.g., 100, 101, 102, 104, 105, 106, 107 110, 111, 120, and AE-121).

Prior to the mid 1980's, segregation practices may not have been sufficiently controlled. ANL-E wastes (absorbed liquid waste and debris) were generally identified and managed by the content codes 100 and 102. In addition, during the mid 1980's and 1990's, containers of absorbed liquid and/or debris waste were precertified under the RWMC SWEPP program and based on the INL Site Treatment Plan (STP) descriptions. The STP IDC assignment did not exist prior to SWEPP and as a result the current IDC may not reflect the original IDC or content code previously identified for the container (e.g., what was AE-100 may have been reclassified as AE-120).

Resolution: The AMWTP will use IDCs to manage, treat, store and ship ANL-E legacy waste.

Containers of ANL-E waste will be subjected to RTR or VE prior to shipment. If results of RTR/VE indicate a different primary waste form within a container that does not match the assigned IDC then the container IDC will be revised as appropriate.

ANL-E waste comprising the same form (i.e., S3000 or S5000) will be covered under specific profiles. One direct ship profile will be developed for S3000 and ANL-E debris will be processed through the AMWTP supercompactor and shipped to WIPP under BN510.1 (or equivalent S/C WSPF).

Discrepancy Resolved?: ☑ Yes ☐ No

AK Personnel: Julie Collins (Print) _____ (Sign) 11/15/12 (Date)

Implementing Document: MP-TRUW-8.13

Waste Generator: AMWTP (BN)	
Source Document Tracking Number: D094A	Revision No.: 0

Document Title/Description: Discrepancy Report relating to ANL-E, INL and AMWTP historical waste identification using content code vs. IDC over time. ANL-E wastes contain waste from site-wide ANL-E laboratory operation. ANL-E waste identified as IDCs: AE-100, AE-101, AE-102, AE-104, AE-105, AE-106, AE-107, AE-110, AE-120 and AE-111 and AE-121 may not have been segregated during early years of operation.

During the early years of operation, ANL-E identified their waste by content code and not by item description codes (IDCs).The identification of IDCs did not occur until later. IDCs (e.g., "AE-XYZ" etc.) were assigned to their waste by INL based on very general generator supplied waste descriptions.

Prior to the mid 1980's absorbed liquids (organic and inorganic) were identified as content code 102. Commingling of waste identified as content code 102 occurred at ANL-E because waste was often generated in small volumes (i.e., less than 55 gallons). The content code 102 was a "catch-all" code for ANL-E homogenous solids. This same type of management also applied to ANL-E heterogeneous debris waste. Content code 100 waste the general "catch-all" code for ANL-E heterogeneous debris waste

For example, the IDC AE-102 was originally assigned by INL to containers identified as having the content code of 102. Later on The IDCs AE-111 and AE-121 may have been assigned to some of the containers that were previously identified as IDC AE-102 during SWEPP pre-certification activities.

AE-111 was first identified originated in the late 1980's and early 1990's during RWMC SWEPP operations. The RWMC SWEPP facility was used to pre-certify CH-TRU waste stored in the TSA-RE. Waste certified during this time period was to be stored until the WIPP site was operational. During this time wastes that were previously identified as AE-102 IDC were identified as AE-111 (Solidified Wet Sludge). The waste is assumed to be the same as AE-102

AE-121 was first identified in the late 1980's and early 1990's during RWMC SWEPP operations. The RWMC SWEPP facility was used to pre-certify CH-TRU waste stored in the TSA-RE. Waste certified during this time period was to be stored until the WIPP site was operational. During this time wastes that previously were identified as AE-102 IDC were identified as AE-121 (TRU Organic Solid Waste).

ANL-E debris waste was originally segregated by combustibles/non-combustibles. As with the ANL-E homogenous solids, heterogeneous debris was managed based on content codes, content codes served as waste identification for purposes of shipment/management during the early years of operation. IDCs were subsequently assigned to ANL-E waste by INL based on general information supplied by the generator.

AE-100: This IDC was developed and assigned to ANL-E waste based on the content code 100 that was originally assigned by ANL-E to the waste.

AE-101: This IDC was developed and assigned to ANL-E waste based on the content code 101 that was originally assigned by ANL-E to the waste. The waste contains similar material inputs as AE-100 wastes (e.g., the waste includes similar waste forms that are also identified within IDC AE-100 and/or as content code 100).

AE-104: This IDC was developed and assigned to ANL-E waste based on the content code 104 that was originally assigned by ANL-E to the waste. The waste contains similar material inputs as AE-100 wastes (e.g., the waste includes similar waste forms that are also identified within IDC AE-100 and/or as content code 100).

AE-106: This IDC was developed and assigned to ANL-E waste based on the content code 106 that was originally assigned by ANL-E to the waste. The waste contains similar material inputs as AE-100 wastes (e.g., the waste includes similar waste forms that are also identified within IDC AE-100 and/or as content code 100).

AE-107: This IDC was developed and assigned to ANL-E waste based on the content code 107 that was originally assigned by ANL-E to the waste. The waste contains similar material inputs as AE-100 wastes (e.g., the waste includes similar waste forms that are also identified within IDC AE-100 and/or as content code 100).

AE-110: This RWMC SWEPP-identified IDC was associated with heterogeneous debris previously identified as content code 100 or as IDC AE-100. The waste is contains similar material inputs as AE-100 wastes (e.g., the waste includes similar waste forms that are also identified within IDC AE-100 and/or as content code 100).

AE-120: This RWMC SWEPP-identified IDC was associated with heterogeneous debris previously identified as content code 100 or as IDC AE-100. The waste is considered to have the same material inputs as AE-100 wastes (e.g., the waste includes similar waste forms that are also identified within IDC AE-100 and/or as content code 100).

References:

Associated Source Document Tracking Number	Source Document Title	Document No./ Rev. No.	Author	Date	Page No.
C1023A	Estimated Waste Stream Volumes and Waste Material Parameter Weights for 2011 Annual Transuranic Waste Inventory Report Update - ECT-00l-11	ECT-001-11 / 0	Elizabeth C. Thiel	04/04/2011	All
P024A	Content Code Assessments for INEL Contact-Handled Stored Transuranic Wastes	WM-F1-82-021 / N/A	T. L. Clements, Jr.	10/00/1982	All
P1351A	Inventory Analysis of Stored Transuranic (TRU) Waste at the Radioactive Waste Management Complex (RWMC)	WM-PD-90-003 / 0	K. P. Guay, INEL, EG&G	04/30/1990	

Associated Source Document Tracking Number	Source Document Title	Document No./ Rev. No.	Author	Date	Page No.
P303A	Description of the SWEPP Certified Waste Sampling Program. RWMC-EDF-363, Rev. 0, May 19, 1989. Rev. 7, April 16, 1997. Rev. 8, Not Dated. Rev. 9, Not Dated. Rev. 11, July 28, 1998. Rev. 12, April 20, 1999. Rev. 13, Not Dated. Rev. 14, March 28, 2000. Rev. 15, June 28, 2000. Rev. 16, December 5, 2000. Rev. 17, August 2, 2001. Rev. 18, August 2, 2002. Rev. 19, August 29, 2002. Rev. 20, October 22, 2002. Rev. 21, November 20, 2002.	RWMC-EDF-363 / 21	J.J. Einerson (Rev 21) - BBWI Document Control and EDMS.	11/20/2002	
P364A	Estimated Earthen and Geofabric Covered TRU Waste Inventory in the TSA at Radioactive Waste Management Complex (RWMC)	INEL-95/194 (RWMC EDF# 837) / 0	J. R. Wixson	08/24/1995	All
P365A	Waste Description Information for Transuranically-Contaminated Wastes Stored at the Idaho National Engineering Laboratory (includes Appendices A and B documents and a letter from John H. Kolts, DOE-ID to Frank Yaklich, BNFL Inc).	INEL-95/0412 / 0	B. D. Raivo, G. K. Becker, T. H. Smith, and G. L. Anderson	12/01/1995	All
P399A	AMWTP Waste Matrix Code Reference Manual	RPT-TRUW-05 / Cur Rev	Generated for the AMWTP Project.	CUR DATE	All
P567A	INEEL Stored Contact-Handled Transuranic Waste Volumes; Idaho National Engineering and Environmental Laboratory; EDF-2550, Rev 0; September 30, 2002	EDF-2550 / 0	C.J. Barnard	09/30/2002	
U120A	Inventory Analysis of Stored Transuranic (TRU) Waste at the Radioactive Waste Management Complex (RWMC).	INEL-96/0308 / 0	K. M. Croft and V. S. Scown.	11/00/1996	

Implementing Document: MP-TRUW-8.13

Associated Source Document Tracking Number	Source Document Title	Document No./ Rev. No.	Author	Date	Page No.
U325S	ANL-E TWMIS	N/A / 0	AMWTP	12/07/2011	All

Nature of Discrepancy: AMWTP legacy ANL-E wastes are the result of the site-wide historical ANL-E laboratory operation. The ANL-E lab operation included: routine analysis/testing/experiments, small one time experiments and/or analysis, supporting maintenance and D&D operations. ANL-E waste were originally identified/managed under a general content code classification (e.g., 100, 101, 102, 104, 105, 106, 107 110, 111, 120, and AE-121).

Prior to the mid 1980's, segregation practices may not have been sufficiently controlled. ANL-E wastes (absorbed liquid waste and debris) were generally identified and managed by the content codes 100 and 102. In addition, during the mid 1980's and 1990's, containers of absorbed liquid and/or debris waste were precertified under the RWMC SWEPP program and based on the INL Site Treatment Plan (STP) descriptions. The STP IDC assignment did not exist prior to SWEPP and as a result the current IDC may not reflect the original IDC or content code previously identified for the container (e.g., what was AE-100 may have been reclassified as AE-120).

Resolution: The AMWTP will use IDCs to manage, treat, store and ship ANL-E legacy waste.

Containers of ANL-E waste will be subjected to RTR or VE prior to shipment. If results of RTR/VE indicate a different primary waste form within a container that does not match the assigned IDC then the container IDC will be revised as appropriate.

ANL-E waste comprising the same form (i.e., S3000 or S5000) will be covered under specific profiles. One direct ship profile will be developed for S3000 and ANL-E debris will be processed through the AMWTP supercompactor and shipped to WIPP under BN510.1 (or equivalent S/C WSPF).

Discrepancy Resolved?: ☑ Yes ☐ No

AK Personnel: Julie Collins _____ _____ _____

Print Sign Date

DIVIDER

PAGE

AMWTP Advanced Mixed Waste Treatment Project	**AK Source Document Review Summary**	**AMWTP Form1068** **Effective Date: 07/17/02, Rev. 1** **MP-TRUW-8.13** **Page 1 of 1**

Reference Number: D011A

2008-0169
RECORD
5-1-08

AK Type:

- ☐ **Published Documentation**
- ☐ **Unpublished Data**
- ☐ **Correspondence**
- ☒ **Discrepancy Report**

Title of Source Document (including author(s), document and revision number, date, etc.): Discrepancy Report D011A – Assignment of HWN D011 to RF IDC-004. SH-11-2002. December 18, 2002.

Information Source: Generated for the BNFL AMWTP Project.

AK #[a]	AK Information Summary
N/A	Resolution substantiating the assignment of D011 to Special Setups (RF IDC-004).

Source Document Data Limitations (if any):
This characterization is subject to change pending confirmatory sampling.

Not referenced in the AK document (rev. 2).

AK Expert:

B. J. Tolman (Print) — /Barry J. Tolman (Sign) — **Date:** 2/13/03

[a] **Obtain from Acceptable Knowledge Documentation Checklists (AMWTP Form-1066/AMWTP Form-1067)**

BNFL Inc.

Memorandum

To: Eric Schweinsberg

Date: December 18, 2002
Page 1 of 1

Ref: SH-011-2002
AM-BN-L-5369

From: Sheila Hailey

Subject: **Discrepancy Report D011A – Assignment of HWN D011 to RF IDC-004**

AMWTP-EDF-199, *Advanced Mixed Waste Treatment Project Waste Stream Designations*, Rev. 0, designates the project's proposed waste streams for the Waste Isolation Pilot Plant (WIPP) and assigns hazardous waste numbers (HWNs) to the waste stream based on INEEL's EDF-RWMC-803, *Chemical Constituents in Transuranic Storage Area (TSA) Waste*, Rev. 6. This discrepancy report documents a difference between the HWNs proposed for RF IDC-004, Special Setups, in AMWTP-EDF-199 and those assigned in EDF-RWMC-803.

D011 is not included in EDF-RWMC-803, Rev. 6 as a potential HWN for RF IDC-004. This HWN has been included for RF IDC-802, Solidified Laboratory Waste. The source document for assignment of D011 to RF IDC-802 is INEL-95/0281, *Idaho National Engineering Laboratory Code Assessment of the Rocky Flats Transuranic Waste* (AK record P016A). It refers to a surrogate study (AK record U054A) that provided TCLP results for the cementation methods used for laboratory waste solidification. The study concluded that the leachability of silver is borderline, and D011 was assigned to IDC-802 pending further investigation.

The *Acceptable Knowledge Document for INEEL Stored Transuranic Waste – Rocky Flats Plant Waste*, Rev. 2 (INEL-96-0280) provides waste and processing descriptions for RF IDC-004 and RF IDC-802. RF IDC-802 replaced RF IDC-004 in approximately 1986 to designate containers of solidified laboratory waste that were certified for disposal. Therefore, both IDCs were generated from the same treatment process and comprise a single waste stream, identified in AMWTP-EDF-199 as BN004, Special Setups. It is expected that both IDCs will share the same HWN assignment. For this reason, D011 will be conservatively assigned to both IDCs in AMWTP-EDF-199. Final HWNs will be assigned to the waste stream in a waste stream profile form at the completion of required WIPP characterization activities.

If you have any questions or concerns, please feel free to contact me at 557-7127.

SH/dm

cc:
Betty Tolman, North Wind Environmental
Rod Arbon, BNFL Inc.
Jim Jackson, BNFL Inc.
Martin Wheeler, BNFL Inc.
AMWTP Document Control
SH-011-2002 File Copy

D011A

DIVIDER

PAGE

RECORD
B-2014-0004
D116A
NKIRK
01/13/2014

AMWTP Advanced Mixed Waste Treatment Project

AK Source Document Review Summary

Form-1068, Rev. 4
Effective: 01/08/09
Page 1 of 1

Implementing Document: MP-TRUW-8.13

1. Source Document Tracking Number: D116A	2. Revision: 0

3. Category

- ☐ Published Documentation
- ☐ Unpublished Documentation
- ☐ Correspondence
- ☑ Discrepancy

4. Title/Description Information: Discrepancies between HWNs and constituents cited in multiple documents related to MFC debris waste.

Document Number: N/A
Revision: N/A
Author: AMWTP
Date: 01/09/2014

5. AK Element	6. Generator Or Waste Type(s)	7. Location in Source Doc.	8. AK Information Summary:
WS6	AW-167	All	Discrepancy resolution for AW-167

9. Document Summary:

This document outlines various HWN assignments between multiple AK documents for MFC debris waste.

10. Source Document Data Limitations (if any):

None identified at this time.

11. AK Expert:	Joe Velasquez	[signature]	1/9/2014
	Print	Sign	Date

Implementing Document: MP-TRUW-8.13

Waste Generator: AMWTP (BN)

Source Document Tracking Number: D116A | Revision No.: N/A

Document Title/Description: Discrepancies between HWNs and constituents cited in multiple documents related to MFC debris waste

References:

Associated Source Document Tracking Number	Source Document Title	Document No./ Rev. No.	Author	Date	Page No.
C1336S	Off-site waste profile Form 1900 ID-ICP-MFC-Gloves	N/A / N/A	AMWTP	XXXX	All
C1339S	E-mail Correspondece, AMWTP; Re: HWNs for CWI/MFC leaded gloves	N/A / N/A	AMWTP	12/19/2013	All
D114A	Discrepancies between HWNs and constituents cited in MFC source documents.	D114A / 0	Randall C. Morris	07/31/2013	All
P2025A	Central Characterization Program Acceptable Knowledge Summary Report For Idaho National Laboratory Materials and Fuels Complex Contact-Handled TRU Debris Waste Stream ID-MFC-S5400 (CCP-AK-INL-008)	CCP-AK-INL-008 /	CCP	12/03/2012	All
P393A	Advanced Mixed Waste Treatment Project Waste Stream Designations	RPT-TRUW-12 / Cur Rev	AMWTP	CUR DATE	Table A-1
P842A	Process Knowledge Summary Report for Materials and Fuels Complex Contact-Handled Transuranic Debris Waste.	INL-EXT-10-17600 / 3	R. P. Grant, T.C. Couch, S. Butler-Materials and Fuels Complex (MFC)	02/01/2013	All
P890A	Acceptable Knowledge Document for Materials and Fuels Complex (MFC) Waste	RPT-TRUW-79 / 0	AMWTP	07/22/2010	All

Nature of Discrepancy: Various AK documents assign different HWNs to MFC debris waste.

Over time MFC debris waste has been assigned various HWNs as a result of:
1. WIPP profiling
2. Time period of characterization
3. Hazardous waste determinations performed by various personnel.

MFC debris waste in the form of leaded rubber gloves was recently recieved at the AMWTP. The leaded rubber gloves were removed from parent containers that have been assigned listed HWNs as well as various characteristic HWNs.

The leaded rubber gloves underwent repackaging at INTEC by CWI and was assigned the IDC AW-167 for purposes of reciept into the AMWTP. The waste was characterized in a AMWTP off-site waste profile Form (i.e., Form 1900). The leaded rubber gloves were assigned the HWN D008 for lead. The assignment of the D008 HWN (only) does not match the HWNs associated with the current IDC AW-167 within the AMWTP RPT-TRUW-12 or AMWTP RPT-TRUW-79.In addition the assignment of the D008 HWN (only) also does not line up with prior characteriation for MFC debris. IDC AW-167 applies to waste generated after 2009 (see P890A).

P680A (CCP MFC AK document):
2007 CCP-AK-008 (revision 0) assigned the D004, D005, D006, D007, D008, D009, D010, D011 and F005 HWNs;
The current 2012 CCP-AK-008 (revision 2) assigns the following HWNs to all MFC debris: D004, D005, D006, D007, D008, D009, D010, D011, D019, D022, D038, F002, F005

P861A 2010 (Off-site WSP Form-1900):
2010 AMWTP Offsite Waste Stream Profile for ID-MFC-S5490, MFC CH-TRU Heterogeneous Debris Waste (IDC AW-167) assigned the following HWNs to AW -167: D006, D007, D008 and D011.

P842A (2012 MFC PK document):
The 2012 Assigned D006, D007, D008 and D009 to debriswaste being shipped to the AMWTP directly from MFC.

P890A (AMWTP RPT-TRUW-79 MFC AK document):
The 2010 revision 0 relating to the MFC AK docment assigned D006, D007, D008 and D011 HWNs.
The 2012 revision 1 MFC AK document assigned the D004, D005, D006, D007, D008, D009, D010, D011, D022, D038, F001, F002, F005 HWNs. The current AMWTP 2013 MFC AK document (i.e., revision 2) assigned the following HWNs to all MFC debris: D004, D005, D006, D007, D008, D009, D010, D011, D022, F001, F002, F005.

P393A (AMWTP waste stream designations):
The current 2013 RPT-TRUW-12 assigns the following HWNs for AW-167: D004, D005, D006, D007, D008, D009, D010, D011, D022, F001, F002, F005

Resolution: The CWI repackaged MFC leaded rubber gloves that will be recieved at the AMWTP as IDC AW-167 will be recieved through the off-site waste profiling process (e.g., MP-TRUW-8.40 and Form 1900)with only the D009 HWN assigned. The D009 is a subset of the overall HWNs that apply to MFC debris waste.

Discrepancy Resolved?: ☑ Yes ☐ No

AK Personnel:	Joe Velasquez		1-9-14
	Print	Sign	Date

DIVIDER

PAGE

1. Source Document Tracking Number: D114A	2. Revision: 0

3. Category

- [ ] Published Documentation
- [ ] Unpublished Documentation
- [ ] Correspondence
- [x] Discrepancy

4. Title/Description Information: Discrepancies between HWNs and constituents cited in MFC source documents.

Document Number: D114A

Revision: 0

Author: Randall C. Morris

Date: 07/31/2013

5. AK Element	6. Generator Or Waste Type(s)	7. Location in Source Doc.	8. AK Information Summary:
WS6	AW-150, AW-152, AW-153, AW-154, AW-155, AW-160, AW-161, AW-162, AW-163, AW-167	All	Resolution of descrepancies in HWN assignment for MFC Radionuclide Processing TRU Heterogeneous Debris Waste.

9. Document Summary:

That portion of the MFC Debris waste identified in RPT-TRUW-79 as MFC Radionuclide Processing TRU Heterogeneous Debris Waste includes IDCs AW-150, AW-160, AW-161, AW-162, AW-163, and AW-167. This Discrepancy Report addresses the assignment of Hazardous Waste Numbers (HWNs) to this preliminary waste group. The HWNs assigned to this waste in the CCP AK Summary, CCP-AK-INL-008 (U133A [draft] and P680A) are different from those assigned in INL/EXT-10-17600, the MFC PK Document (P842A). With some exceptions, the AMWTP will accept the conservative philosophy adopted in the CCP AK Summary (U133A and P680A) and conservatively assign the maximum set of codes. The HWNs assigned to the MFC Radionuclide Processing TRU Heterogeneous Debris Waste will include D004 – D011, D022, F001, F002, and F005.

10. Source Document Data Limitations (if any):

This DR is written using tables which do not display properly in the database. While all of the text is included under the "Discrepancy Resolution" button above, the correctly formatted DR is included as an attached file.

11. AK Expert:	Randall C. Morris	Randall C. Morris	7/31/2013
	Print	Sign	Date

Implementing Document: MP-TRUW-8.13

Waste Generator: Materials and Fuels Complex (MFC/ANL-W)	
Source Document Tracking Number: D114A	Revision No.: 0
Document Title/Description: Discrepancies between HWNs and constituents cited in MFC source documents.	
References:	

Associated Source Document Tracking Number	Source Document Title	Document No/ Rev. No.	Author	Date	Page No(s).
C865A	Email correspondence from Roy P Grant to Carolyn Abbott re: Three containers listed on IWTS material profile ANL505T	N/A / N/A	Roy P. Grant, MFC	11/10/2008	
P307A	Hazardous Waste Constituents of INEL Contact-Handled Stored Transuranic Waste	EDF-RWMC-369 / N/A	D. E. Kudera	05/19/1989	
P312A	Characterization of Wastes Generated at Argonne National Laboratory-West with IDCs of 161, 162, and 163	INEEL/INT-99-00081, LMITCO. / 0	C. B. Ransom	04/07/1999	
P680A	Central Characterization Project Acceptable Knowledge Summary Report for Idaho National Laboratory Materials and Fuels Complex Contact-Handled TRU Debris, Waste Stream ID-MFC-S5400	CCP-AK-INL-008 / 2	Mike Ramirez, CCP	12/03/2012	
P708A	IWTS Material Profile No. 3527, AnalyticalLab TRU Waste, generated from ANL Bldg 752 Analytical Laboratory. Inactive	IWTS 3527 / 4 updates	IWTS	5/19/2008	
P709A	IWTS Material Profile No. 3526, Casting Lab TRU Waste, ANL Bldg. 752, Analytical Laboratory, 4-1-99	3526 / 3 updates	Fedder, Jennifer	3/31/2010	
P710A	IWTS Material Profile No. 3657P: Glovebox Debris from: Testing, Alpha, & Special Projects, Casting Labs, etc.	3657P / 3	R. Allen	10/27/08	
P716A	IWTS Material Profile No. 5274N, Misc. Waste from Waste Form Testing, Alpha, & Special Projects	5274N /	R. Allen	3/31/2010	

	Glovebox, etc., 3-9-07INACTIVE				
P718A	IWTS Material Profile No. 5185N, Casting Lab Pb Lined Gloves, Generated From Bldg. 752, Analytical Laboratory,1/10/2007	5185N / 1	Jonathan Jacobson	3/31/2010	
P734A	IWTS Material and Waste Characterization Profile No. ANL503T, HEPA Filters Contaminated with Characteristic Waste and TRU, Bldg 752	ANL503T /	Nancy Stewart, MFC	2/18/1998	
P750A	IWTS Material Profile No. ANL142T, Lead Contaminated Articles and Debris - TRU Contaminated, 2-13-98, Inactive as of 4-9-98	ANL142T / 1	Nancy Stewart	3/31/2010	
P751A	IWTS #ANL505T.R1: Debris Contaminated with Characteristic Waste and MTRU, 3/11/2010	ANL505T.R1 / 1	Jonathan Jacobson, WGS	4/5/2010	
P842A	Process Knowledge Summary Report for Materials and Fuels Complex Contact- Handled Transuranic Debris Waste.	INL-EXT-10-17600 / 3	R. P. Grant, T.C. Couch, S. Butler-Materials and Fuels Complex (MFC)	02/01/2013	
P848A	IWTS Material and WasteCharacterization Profile: Analytical Lab CH-TRU Waste.	3527.R1 / 0	J. Jacobson	9/29/2009	
P849A	IWTS Material Profile No. 5419N.R1, TRU,>100 nCi/g, from FMF, Building 704, 9-29-09	5419N.R1 / 1	Jonathan Jacobsen, WGS	3/31/2010	
P850A	IWTS Material Profile No. 5274N.R1: Misc. Waste from Waste Form Testing, Alpha, & Special Projects Glovebox, etc., 9/29/09	5274N.R1 / 0	Matthew Allen	3/31/2010	
U227S	IWTS Material and Waste Characterization Profile 3522T: AW162CH: ANL-W FMF EFL ZR-U-PU Fuel Casting Alloys Residues, STP: ID- ANL-162T	3522T / 0	IWTS	2/1/1989	
U228S	IWTS Material and Waste Characterization Profile #3523t: AW163CH: ANL-W ACL cold Line Absorbed Liquid, Misc., Hardware and Poly, STP: ID-ANL-163T	3523T / 0	IWTS	9/14/1988	
U229S	IWTS Material and Waste Characterization Profile #3581T: ANL-W ALC Glassware, Paper, Poly , and Miscellaneous Hardware IDC-161, STP: ID-ANL-161.	3581T / 0	IWTS	5/13/1991	
U333A	Central Characterization Project Acceptable Knowledge Summary Report for Idaho National Laboratory Materials and Fuels Complex Contact-Handled TRU Debris, Waste Stream ID-MFC-S5400, DRAFT E	CCP-AK-INL-008 / 2	Scott Smith		

Nature of Discrepancy:

That portion of the MFC Debris waste identified in RPT-TRUW-79 as MFC Radionuclide Processing TRU Heterogeneous Debris Waste includes IDCs AW-150, AW-160, AW-161, AW-162, AW-163, and AW-167. This Discrepancy Report addresses the assignment of Hazardous Waste Numbers (HWNs) to this preliminary waste group. The HWNs assigned to this waste in the CCP AK Summary, CCP-AK-INL-008 (U133A [draft] and P680A) are different from those assigned in INL/EXT-10-17600, the MFC PK Document (P842A).

The HWNs assigned in the MFC PK Document (P842A), were based on process knowledge, up-to-date MFC IWTS material and characterization profiles (Table 1), and analytical results. Most of the IWTS profiles used did not identify any hazardous constituents with associated HWNs. The MFC mixed-TRU debris sent to AMWTP was assigned HWNs, D006, D007, D008, and D011 (Table 2).

The CCP AK Summary (U133A [draft] and P680A) based HWN assignment on process knowledge, analytical results, and a subset of IWTS profiles that did identify HWNs (Table 1). Where constituents were identified and, either conflicting characterization information was available or analytical evidence was insufficient to demonstrate that these constituents would not exceed regulatory thresholds, the applicable EPA HWNs were assigned to the waste stream. This resulted in the assignment of HWNs D004 – D011, D019, D022, D038, F002, and F005 (Table 2).

The HWNs assigned to the MFC Radionuclide Processing TRU Heterogeneous Debris Waste in the MFC PK document are a subset of those assigned in the CCP AK Summary (Table 2).

Table 1. IWTS profiles used in developing the MFC PK document (P842A) and the CCP AK Summary (U133A and P680A) for MFC Radionuclide Processing TRU Heterogeneous Debris Waste.

IWTS Profile Number	AMWTP Source Document Number	Used in MFC PK (P842A)	Used in CCP AK Summary (U133A and P680A)
5419N.R1	P849A	✓	
3526	P709A	✓	✓
3527	P708A	✓	✓
3527.R1	P848A	✓	
5274N	P716A	✓	
5274N.R1	P850A	✓	
3657P	P710A	✓	✓
ANL503T	P734A	✓	
ANL505T	C865A	✓	✓
ANL505T.R1	P751A	✓	
5185N	P718A	✓	
ANL142T	P750A	✓	✓

Table 2. EPA Hazardous Waste Numbers assigned to MFC waste in source documents and the AMWTP AK document for MFC Radionuclide Processing TRU Heterogeneous Debris Waste (RPT-TRUW-79).

HWN	Constituent	HWN assigned in documents			
		MFC PK (P842A)	CCP AK Summary (U133A and P680A)	EDF-RWMC-369 (P307A)	AMWTP AK (RPT-TRUW-79)
D002	Corrosive			✓ a	
D004	Arsenic		✓		✓
D005	Barium		✓		✓
D006	Cadmium	✓	✓		✓
D007	Chromium	✓	✓		✓
D008	Lead	✓	✓	✓	✓
D009	Mercury		✓		✓
D010	Selenium		✓		✓
D011	Silver	✓	✓		✓
D019	Carbon tetrachloride		✓ b		
D022	Chloroform		✓		✓
D038	Pyridine		✓ b		
F001	Carbon tetrachloride				✓
F002	Trichloroethylene		✓		✓
F005	Pyridine				✓
	Toluene		✓		✓

a. This assignment was based on the assumption that analytical samples were probably dissolved in acid prior to absorption on Oil-Dri.
b. These toxicity characteristic HWNs (and constituents) were reported by AMWTP under their corresponding spent solvent HWNs.

The AMWTP evaluated all of the IWTS profiles used in the MFC PK document (P842A) and the CCP AK Summary (U133A and P680A) (Table 1); additional IWTS profiles IWTS 3522T (U227S), IWTS 3523T (U228S), and IWTS 3581T (U229S); and additional source documents EDF-RWMC-369 (P307A) and INEEL/INT-99-00081 (P312A). These evaluations did not result in the assignment of HWNs beyond those assigned in the CCP AK Summary.

Resolution:

With some exceptions, the AMWTP will accept the conservative philosophy adopted in the CCP AK Summary (U133A and P680A) and conservatively assign the maximum set of codes (Table 2). D002, identified in EDF-RWMC-369 (P307A) will not be assigned because this assignment was based on the assumption that analytical samples were probably dissolved in acid prior to absorption on Oil-Dri. The AMWTP does

not receive liquid waste from MFC; therefore D002 would not apply. In addition, the constituents associated with toxicity characteristic HWNs D019 (carbon tetrachloride) and D038 (pyridine) are also assigned to corresponding spent solvent HWNs F001 and F005. Where a hazardous constituent is associated with both a characteristic and a listed, HWN the AMWTP applies the listed HWN in lieu of the characteristic HWN.

The HWNs assigned to the MFC Radionuclide Processing TRU Heterogeneous Debris Waste will include D004 – D011, D022, F001, F002, and F005.

Discrepancy Resolved?:	Yes ☒ No ☐

AK Personnel:	Randall C Morris	Randall C Morris	07/31/13
	Print	Sign	Date

DIVIDER

PAGE

B-2012-0048
RECORD
JMC 03/26/12

AMWTP Advanced Mixed Waste Treatment Project

AK Source Document Review Summary

Form-1068, Rev. 4
Effective: 01/08/09

Implementing Document: MP-TRUW-8.13

1. Source Document Tracking Number: D096A	**2. Revision:** 1

3. Category

- ☐ Published Documentation
- ☐ Unpublished Documentation
- ☐ Correspondence
- ☑ Discrepancy

4. Title/Description Information: Discrepancy Report resolving the HWNs for AMWTP ANL-E legacy wastes.

Document Number: D096A
Revision: N/A
Author: Tim Venneman
Date: 01/30/2012

5. AK Element	6. Generator Or Waste Type(s)	7. Location in Source Doc.	8. AK Information Summary:
WS1, WS3, WS4, WS5, WS6, WS8	AE-100, AE-101, AE-102, AE-104, AE-105, AE-106, AE-107, AE-110, AE-111, AE-120, AE-121	All	The document discusses the various RCRA characerization (and determinations that have ocurred over time with AMWTP ANL-E legacy wastes (S3000 and S5000). ANL-E waste have been classified as both non-hazardous and hazardous and has had various HWNs applied depending upon the characterization group.

9. Document Summary:

The document discusses the various RCRA characterizations (and determinations) performed by various organizations that have occurred over time for AMWTP ANL-E legacy wastes (S3000 and S5000). ANL-E legacy waste have been classified as non-hazardous and hazardous and has had various HWNs applied depending upon the characterization group.

Resolution is noted as: AMWTP will manage, treat and ship the waste as TRU mixed waste with the following HWNs: D004, D005, D006, D007, D008, D009, D010, D011, D019, D027, D028, D029, D030, D037, F002, F004, and F005.

10. Source Document Data Limitations (if any):

None identified.

11. AK Expert:	Julie Collins		3/22/2012
	Print	Sign	Date

AMWTP Advanced Mixed Waste Treatment Project	**Acceptable Knowledge Discrepancy Report**	Form-1784, Rev. 1 Effective: 09/24/09 Page 1 of 4

Implementing Document: MP-TRUW-8.13

Waste Generator: AMWTP (BN)	
Source Document Tracking Number: D096A	Revision No.: N/A

Document Title/Description: Discrepancy Report resolving the HWNs for AMWTP ANL-E legacy wastes.

The following information discusses the various RCRA characterization (and determinations that have occurred over time with ANL-E wastes (S3000 and S5000). Contact handled debris waste was generated from multiple locations across the ANL-E site and was initially identified and managed based on the content codes. Management by content code does not take into consideration the generator level operation that may have generated the absorbed waste. As a result some containers will have debris and non-debris wastes that originated from multiple locations within the same container.

ANL-E legacy waste was not routinely segregated by waste type (e.g., for processes that generated small volumes of waste; early in the program). Beginning in early 1970's, debris was separated into combustible and non-combustible; however several waste generating areas did not segregate their waste (debris and/or homogeneous solids) due to the low volume of waste generated. As a result some containers will have both debris and non-debris wastes within the same container.

The WMO also routinely commingled waste from various ANL-E primary waste generators, including Buildings 200, 205, 212, 315/316, and 350, as well as small quantities of waste from minor waste generating buildings. Commingling of liquid wastes during neutralization, solidification and absorption operations have been conducted. In addition, the WMO has also commingled heterogeneous debris waste received in small quantities into single containers (e.g., 55-gallon drums).

Due to the commingling of ANL-E legacy waste the applicable ANL-E HWNs/constituents associated with ANL-E homogeneous solids and heterogeneous debris waste are the same.

References:

Associated Source Document Tracking Number	Source Document Title	Document No./ Rev. No.	Author	Date	Page No.
P024A	Content Code Assessments for INEL Contact-Handled Stored Transuranic Wastes	WM-F1-82-021 / N/A	T. L. Clements, Jr.	10/00/1982	All

D096A

Implementing Document: MP-TRUW-8.13

Associated Source Document Tracking Number	Source Document Title	Document No./ Rev. No.	Author	Date	Page No.
P1154A	AMWTP Form-1900, AMWTP Offsite Waste Stream Profile for AECHHM-PK, Argonne CH Homogeneous Solids (AE-254); AMWTP Form-1906, Non -AMWTP Waste Profile Environmental Checklist for Profile ID AECHHM-PK; AMWTP Form-1907 Non AMWTP Waste Profile Radiological Controls Checklist for Profile ID AECHHM-PK; AMWTP Form-1908, Non-AMWTP Waste Profile Acceptable Knowledge Checklist for Profile ID AECHHM-PK; AMWTP Form-1910, Non AMWTP Waste Profile Industrial Safety/ Industrial Hygiene (IS/IH) Checklist for Profile ID AECHHM-PK; AMWTP Form-2005, Offsite Waste Profile nuclear Safety Checklist for Profile ID AECHHM-PK.	AECHHM-PK / 0	Mark Doherty, CCP	05/11/2011	All
P1379A	Central Characterization Project Acceptable Knowledge Summary Report For Idaho National Laboratory, Argonne Contact-Handled Transuranic Waste from Facility Maintenance and Laboratory Operations, Waste Streams: ID-AECHDM, ID-AECHHM	CCP-AK-INL-025 / 1	Mike Ramirez	12/16/2011	All
P1380A	Central Characterization Project acceptable Knowledge Summary Report for Argonne National Laboratory – East Contact-Handled TRU Waste, Facility Maintenance and Laboratory Operations	CCP-AK-ANLE-001 / 11	David H. Haar	12/31/2003	

D096A

Implementing Document: MP-TRUW-8.13

Associated Source Document Tracking Number	Source Document Title	Document No./ Rev. No.	Author	Date	Page No.
P1381A	CCP-AK-ANLE-500 Central Characterization Project Acceptable Knowledge Summary Report For Argonne Remote-Handled Debris Waste, Waste Stream: AERHDM	CCP-AK-ANLE-500 / 9	Irene Quintana	12/21/2011	
P310A	EPA Hazardous Waste Codes Found in INEL Stored TRU Waste Content Codes	EDF-RWMC-421 / 4	EG&G Idaho, Inc.	04/01/1994	All
P319A	Idaho National Engineering Laboratory Stored Transuranic Waste Characterization: Nonradiological Hazards Identification.	WM-F1-81-015 / N/A	T.L. Clements, Jr.	09/00/1981	All
P361A	Chemical Constituents in Transuranic Storage Area (TSA) Waste. EDF-803, Rev. 0. June 12, 1995. Rev. 1. July 10, 1996. Rev. 2. August 12, 1997. Rev. 3. April 4, 1998. Rev. 4. October 30, 2000. Rev. 5. September 17, 2001. Rev. 6. August 1, 2002. Rev. 7. December 18, 2002.	EDF-803 / 7	INEEL	12/18/2002	All
P393A	Advanced Mixed Waste Treatment Project Waste Stream Designations	RPT-TRUW-12 / Cur Rev	AMWTP	CUR DATE	All
P888A	Waste Characterization for INEL Remote-Handled/Special-Case Stored Transuranic Wastes	WM-PD-85-014 / 11 [illegible]	Dennis A. Peterson	11/1/1985	All

Nature of Discrepancy: ANL-E wastes (S3000 and S5000) have been classified as non-hazardous and hazardous and depending upon the time frame in question has had various HWNs applied by multiple organizations.

AMWTP Advanced Mixed Waste Treatment Project	**Acceptable Knowledge Discrepancy Report**	Form-1784, Rev. 1 Effective: 09/24/09 Page 4 of 4

D096A

Implementing Document: MP-TRUW-8.13

Resolution: ANL-E wastes will be classified by AMWTP as mixed waste. ANL-E wastes were not sufficiently segregated during the early years and as a result cross contamination from constituents associated with ANL-E laboratory operation has occurred. Due to the commingling of various ANL-E wastes the applicable ANL-E HWNs/constituents associated with ANL-E waste are a composite of HWNs associated with ANL-E TRU waste.

The following HWNs will be applied to **all** legacy ANL-E wastes: D004, D005, D006, D007, D008, D009, D010, D011, D027, D028, D029, D030, D037, F001, F002, F004, and F005.

Discrepancy Resolved?: ☑ Yes ☐ No

AK Personnel: Julie Collins (Print) — Julie Collins (Sign) — 3/22/12 (Date)

RECORD
B-2014-0126
SWALKER
06/10/2014

AK12

AMWTP Advanced Mixed Waste Treatment Project

Acceptable Knowledge Resolution (AKR) Checklist

Form-1070, Rev. 3
Effective: 05/24/2006

Implementing Document: MP-TRUW-8.13

Waste Stream or IDC: IDC BN-509 AKR Number: AKR-14-833

Batch Number: See attached Container ID: See attached

Inconsistency: IDC change from BN-509 to BN-508

Evaluation Criteria	Yes	No	Documentation
1. Does the inconsistency require a change to the waste matrix code (WMC) or IDC, if appropriate? If yes, ensure that a NCR has been issued and complete evaluation items 4 through 9.	X		See attached
2. Does the inconsistency require the potential addition of a hazardous waste number (HWN) to an approved waste stream? If yes, complete items 7 and 8.		X	
3. Does the inconsistency require a change to the radionuclides associated with a waste stream? If yes, complete item 9.		X	
If items 1 through 3 are no, answer no for the rest of the evaluation and attach justification for items 1 and 2.	**Reevaluation required?**		
	Yes	**No**	
4. Verify and document that the waste materials to be reassigned a WMC were generated within the specified time period, area and buildings, waste generating process, and that the process material inputs are consistent with the waste material parameters identified during radiography or visual examination.	X		See attached
5. Review existing information based on the historical container identification number and document all differences in HWN assignments and acceptable layers of confinement.	X		See attached
6. If inconsistencies exist in the acceptable knowledge (AK) information for the reassigned WMC, document the disposition of this container, and define the actions necessary to fully characterize the waste.		X	Not applicable
7. Reassess and document all sampling and analytical data associated with the waste.		X	Not applicable
8. If differences exist in the HWNs that were assigned, reassess and document all required AK information associated with the new designation. If a HWN needs to be added to an approved waste stream, ensure that an NCR has been issued.		X	Not applicable
9. Reassess and document AK associated with new radionuclide content determination and new waste stream designation.		X	Not applicable

Resolution: AK recommends an IDC change from BN-509 to BN-508.

Record required changes to AK record. (This includes updating reference data in WTS):

Caralea Hurtle-Daeneke RCM 6.10.14

(signature) (date)

NOTE: *AKRs that address major actions require an NCR or CAR if actions are not complete before signature date.*

Waste Stream or IDC: IDC BN-509 AKR Number: AKR-14-833

Batch Number: See attached Container ID: See attached

Inconsistency: IDC change from BN-509 to BN-508

References

1. RPT-TRUW-05, AMWTP Waste Matrix Code Reference Manual (P399A)
2. RPT-TRUW-12, AMWTP Waste Stream Designations (P393A)
3. Supercompacted Debris Waste Stream Profile Package (P1995A)
4. RPT-TRUW-06, AMWTP TRU Waste Management Acceptable Knowledge Elements: AMWTP Baseline AK for Newly Generated Waste (P400A)
5. HWD 071511-01, Hazardous Waste Determination, Hazardous Debris from Zone 3.

Container Information:

Container ID	Current Drum IDC	Recommended Drum IDC	IDC Change NCR #
10037107	BN-509	BN-508	86365

Background:

The newly-generated waste container identified above was inappropriately assigned BN-509 during creation or overpack. Based on the observation that the waste in this container was generated in WMF-676 and is debris directly related to the S/C operations from IDCs approved in RPT-TRUW-83 as approved feed stock (e.g., debris from box lines) , AK recommends an IDC change from BN-509, Absorbed Organic Liquids (Excluding Squeezants) to BN-508, AMWTP Newly Generated Debris.

Justification and/or Rationale

AK indicates that IDC BN-509 waste consists of organic liquids derived from waste containers that are not PCB contaminated and that were treated using an inorganic particulate absorbent material (e.g., Micro-Cel® E, Petroset II-G®, Aquaset II-G®, or other approved inorganic absorbents). The absorbed organic liquids include prohibited containerized liquids removed and absorbed at SCW. This also includes absorbed organic liquids from maintenance activities and spill cleanups. [1, 2, 4] AK indicates that IDC BN-508 waste consists of debris waste generated in WMF-676 that is directly related to the S/C operations from IDCs approved in RPT-TRUW-83 as approved feed stock (e.g., debris from box lines). It includes TRU debris waste generated during waste management, maintenance, and clean-up operations performed in WMF-676 Zone 3 in direct support of S/C operations, including HEPA and prefilters generated from the WMF-676 ventilation systems. Waste also includes TRU debris from repackaging waste in DWPG and SCW with IDCs approved in RPT-TRUW-83. Waste may also contain <50% by volume homogeneous solids (e.g., absorbents including Vermiculite, Oil-Dri® and Aquaset II-G®), soil, and sand. [1, 2, 3, 4, 5] The container contents are more consistent with the BN-508 waste than with the BN-509 waste.

IDC BN-509 is assigned WMC S3114 (Absorbed Organic Liquids) [1, 2] IDC BN-508 is assigned WMC S5490 (Unknown/Other Heterogeneous Debris) which more accurately reflects the physical form of the waste identified in the RTR. BN-508 is included in the Supercompactor feedstock debris wastes (BN510.3) while BN-509 is not. [3, 4]

Neither BN-509 nor BN-508 is part of an approved direct-ship profile. The generator assigned HWNs for IDC BN-508 are: [2]

Waste Stream or IDC: IDC BN-509 AKR Number: AKR-14-833

Batch Number: See attached Container ID: See attached

Inconsistency: IDC change from BN-509 to BN-508

BN-508	D004 – D011, D022, D027 – D030, D034, D037, D043, F001, F002, F004 – F007, and F009

The HWNs assigned to IDC BN-508 under WSPF BN510.3 are D004 – D011, D022, D027 – D030, D032, D033, D034, D037, D043, F001, F002, F004 – F007, and F009.[3]

Resolution and Corrective Actions

AK recommends an IDC change from BN-509 to BN-508 for the container listed above. This evaluation is based on the AK information and the observed container contents. This AKR will be used to close the related NCRs.

DIVIDER

PAGE

RECORD
AKR-14-820R3
B-2014-0243
JVELASQUES
08/21/14

AMWTP Advanced Mixed Waste Treatment Project

Acceptable Knowledge Resolution (AKR) Checklist

Form-1070, Rev. 3
Effective: 05/24/2006

Implementing Document: MP-TRUW-8.13

Waste Stream or IDC: IDC RF-004 AKR Number: AKR-14-820 R3

Batch Number: See attached Container ID: See attached

Inconsistency: IDC change from RF-004 to RF-337

Evaluation Criteria	Yes	No	Documentation
1. Does the inconsistency require a change to the waste matrix code (WMC) or IDC, if appropriate? If yes, ensure that a NCR has been issued and complete evaluation items 4 through 9.	X		See attached
2. Does the inconsistency require the potential addition of a hazardous waste number (HWN) to an approved waste stream? If yes, complete items 7 and 8.		X	
3. Does the inconsistency require a change to the radionuclides associated with a waste stream? If yes, complete item 9.		X	
If items 1 through 3 are no, answer no for the rest of the evaluation and attach justification for items 1 and 2.	**Reevaluation required?**		
	Yes	**No**	
4. Verify and document that the waste materials to be reassigned a WMC were generated within the specified time period, area and buildings, waste generating process, and that the process material inputs are consistent with the waste material parameters identified during radiography or visual examination.	X		See attached
5. Review existing information based on the historical container identification number and document all differences in HWN assignments and acceptable layers of confinement.	X		See attached
6. If inconsistencies exist in the acceptable knowledge (AK) information for the reassigned WMC, document the disposition of this container, and define the actions necessary to fully characterize the waste.		X	Not applicable
7. Reassess and document all sampling and analytical data associated with the waste.		X	Not applicable
8. If differences exist in the HWNs that were assigned, reassess and document all required AK information associated with the new designation. If a HWN needs to be added to an approved waste stream, ensure that an NCR has been issued.		X	Not applicable
9. Reassess and document AK associated with new radionuclide content determination and new waste stream designation.		X	Not applicable

Resolution: AK recommends an IDC change from RF-004 to RF-337.

Record required changes to AK record. (This includes updating reference data in WTS):

AK Expert: Caralea Hinkle-Darnell RCM (signature) 8.18.97 (date)

NOTE: *AKRs that address major actions require an NCR or CAR if actions are not complete before signature date.*

Waste Stream or IDC: IDC RF-004 AKR Number: AKR-14-820 R3

Batch Number: See attached Container ID: See attached

Inconsistency: IDC change from RF-004 to RF-337

References

1. RPT-TRUW-05, AMWTP Waste Matrix Code Reference Manual (P399A)
2. INEL-96/0280, Acceptable Knowledge Document for INEEL Stored Transuranic Waste–Rocky Flats Plant, Rev. 3 (P368A)
3. WM-F1-82-021, Content Code Assessments for INEL Contact-Handled Stored Transuranic Wastes (P024A)
4. RPT-TRUW-56, Acceptable Knowledge Document for INL Stored Transuranic Waste–Rocky Flats Plant (P649A)
5. RPT-TRUW-12, AMWTP Waste Stream Designations (P393A)
6. Supercompacted Debris Waste Stream Profile Package (P1995A)
7. RPT-TRUW-06, AMWTP TRU Waste Management Acceptable Knowledge Elements: AMWTP Baseline AK for Newly Generated Waste (P400A)
8. RPT-TRUW-86, Identification of Pack Dates for Waste Potentially Included in the AMWTP Inventory (P1031A)
9. BN004 Special Setups, Waste Stream Profile Package (P609A)
10. CCP-AK-INL-004, Central Characterization Project Acceptable Knowledge Summary Report for Rocky Flats Combustibles and Plastic Stored at the Idaho National Laboratory: Waste Stream ID-RF-S5300-A, Rev. 1 (P633A)

Container Information:

Container	RTR Batch	Historical ID	Prefix Date Range for IDC RF-337 [8]	Historical Pack Date	Historical Gross Weight (lb)	Scale Weight (lb)	NCR	AKR Rev.
10072969	RTR14-00004	IDRF074401852	09/22/70 – 07/25/83	09/03/72	330.69	326.34	83455	0
10177689	RTR14-00036	IDRF074401627	09/22/70 – 07/25/83	08/17/72	308.65	288.86	84346	1
10524117	RTR14-00182	744-1890	09/22/70 – 07/25/83	12/27/71	*	246.96	87500	2
10526403	RTR14-00239	744-1892	09/22/70 – 07/25/83	12/27/71	176.00**	207.27	88097	3

*No historical gross weight identified.

**Historical gross weight is for the inner container.

Background:

The Rocky Flats (RF) waste drums identified above were examined by RTR as documented in the associated RTR batch. Based on the observed container contents and instructions in RPT-TRUW-05 [1], the RTR operators recommended an IDC change from the historical IDC RF-004, Special Setups, to RF-337, Plastic, Teflon, Wash, PVC.

Justification and/or Rationale

AK indicates that IDC RF-004 waste consists primarily of solidified inorganic waste generated in Building 774 by mixing aqueous chemical liquid waste generated by various operations at RF with a cement mixture and adding up to 15 pounds of cement to the top of the sludge. Up to 20 lbs. of cement was added to top and/or bottom of drum, rigid liner, and/or the O-ring drum bag. Some drums may contain primarily poly bottles of solidified waste (including organic waste) instead of direct loaded sludge waste. Other drums may not contain sludge but contain debris waste (i.e., polyethylene bottles that previously contained liquid waste). A small amount of cement was added to the empty bottles before packaging into drums. [1, 2, 3, 4] This AK information was used as the basis for the waste stream description for waste stream profile BN004, Special Setups Waste. [9]

Waste Stream or IDC: IDC RF-004 AKR Number: AKR-14-820 R3

Batch Number: See attached Container ID: See attached

Inconsistency: IDC change from RF-004 to RF-337

AK indicates that IDC RF-337 waste consists of plastic and non-leaded rubber waste including debris items in the form of empty bottles, piping, tubing, glovebox windows, bags, tape, sheeting, and protective clothing (e.g., supplied air suits, surgeon's gloves, booties, respirator masks, parts and cartridges, and non-leaded glovebox gloves), etc. The types of plastic include polyethylene, polypropylene, PVC, Teflon, tygon, and Plexiglas. The types of rubber include latex, neoprene, Hypalon and Viton). RF-337 waste may also contain any amounts of cloth, paper and wood products including items such as wipes and paper. The waste may only contain < 50% by volume glass and metal debris items (e.g., metal respirator cartridges, Raschig rings, nails, cans, vials, bottles, lead sheeting, bolts, pipe, welding rods, batteries, tools, and wire). [1, 2, 3, 4] This AK information was used as the basis for the waste stream description for CCP waste stream profile ID-RF-S5300-A, RFETS Combustibles and Plastics Stored at the INL. [10] The contents of the listed containers identified by RTR are more consistent with RF-337 waste than with RF-004 waste.

The packaging identified by RTR for the listed containers is consistent with expected variation of the packaging configuration for IDC RF-337. [1, 3, 4]

The historical data for the listed containers are consistent with the recommended IDC change to RF-337. The historical prefix assigned to these containers was associated with RF-337 when the containers were packed. [8] The container pack dates also fit within the historical pack date range for RF-337 (July 1971 – March 1996). [8] The historical gross weights and the AMWTP scale weights are not significantly different.

IDC RF-004 is assigned WMC S3150 (Solidified Homogeneous Solids). IDC RF-337 is assigned WMC S5300 (Organic Debris) which more accurately reflects the physical form of the waste identified in the RTR. IDC RF-337 is included in the Supercompactor feedstock debris wastes (BN510.3). [6, 7]

The EPA HWNs assigned to IDC RF-004 direct-shipped under WSPF BN004 are D006 – D008, D029, F001, F002, F005 – F007, and F009. [9] The EPA HWNs assigned to IDC RF-337, direct-shipped under CCP WSPF ID-RF-S5300-A are D004 – D011, D022, D028, D029, F001, F002, F005 – F007, and F009. [10] Those assigned to RF-337 supercompacted under WSPF BN510.3, are D004 – D0011, D022, D027 – D030, D032, D033, D034, D037, D043, F001, F002, F004 – F007, and F009. [6, 10]

Resolution and Corrective Actions

AK recommends an IDC change from RF-004 to RF-337 for containers listed above. This evaluation is based on the AK information, historical drum information, and the RTR observations. This AKR will be used to close the related NCRs.

DIVIDER

PAGE

RECORD
AKR-14-821
B-2014-0004
NKIRK
02/25/2014

AMWTP Advanced Mixed Waste

Acceptable Knowledge Resolution (AKR) Checklist

Implementing Document: MP-TRUW-8.13

Waste Stream or IDC: IDC RF-425 AKR Number: AKR-14-821

Batch Number: See attached Container ID: See attached

Inconsistency: IDC change from RF-425 to RF-330

Evaluation Criteria	Yes	No	Documentation
1. Does the inconsistency require a change to the waste matrix code (WMC) or IDC, if appropriate? If yes, ensure that a NCR has been issued and complete evaluation items 4 through 9.	X		See attached
2. Does the inconsistency require the potential addition of a hazardous waste number (HWN) to an approved waste stream? If yes, complete items 7 and 8.		X	
3. Does the inconsistency require a change to the radionuclides associated with a waste stream? If yes, complete item 9.		X	
If items 1 through 3 are no, answer no for the rest of the evaluation and attach justification for items 1 and 2.	**Reevaluation required?**		
	Yes	**No**	
4. Verify and document that the waste materials to be reassigned a WMC were generated within the specified time period, area and buildings, waste generating process, and that the process material inputs are consistent with the waste material parameters identified during radiography or visual examination.	X		See attached
5. Review existing information based on the historical container identification number and document all differences in HWN assignments and acceptable layers of confinement.	X		See attached
6. If inconsistencies exist in the acceptable knowledge (AK) information for the reassigned WMC, document the disposition of this container, and define the actions necessary to fully characterize the waste.		X	Not applicable
7. Reassess and document all sampling and analytical data associated with the waste.		X	Not applicable
8. If differences exist in the HWNs that were assigned, reassess and document all required AK information associated with the new designation. If a HWN needs to be added to an approved waste stream, ensure that an NCR has been issued.		X	Not applicable
9. Reassess and document AK associated with new radionuclide content determination and new waste stream designation.		X	Not applicable

Resolution: AK recommends an IDC change from RF-425 to RF-330.

Record required changes to AK record. (This includes updating reference data in WTS):

AK Expert: Carolee Hurkle-Daniel RCM 2-24-14
(signature) (date)

NOTE: *AKRs that address major actions require an NCR or CAR if actions are not complete before signature date.*

Waste Stream or IDC: IDC RF-425 AKR Number: AKR-14-821

Batch Number: See attached Container ID: See attached

Inconsistency: IDC change from RF-425 to RF-330

References

1. RPT-TRUW-05, AMWTP Waste Matrix Code Reference Manual (P399A)
2. INEL-96/0280, Acceptable Knowledge Document for INEEL Stored Transuranic Waste–Rocky Flats Plant, Rev. 3 (P368A)
3. WM-F1-82-021, Content Code Assessments for INEL Contact-Handled Stored Transuranic Wastes (P024A)
4. RPT-TRUW-56, Acceptable Knowledge Document for INL Stored Transuranic Waste–Rocky Flats Plant (P649A)
5. RPT-TRUW-12, AMWTP Waste Stream Designations, Rev. 8 (P393A)
6. Supercompacted Debris Waste Stream Profile Package (P1995A)
7. RPT-TRUW-06, AMWTP TRU Waste Management Acceptable Knowledge Elements: AMWTP Baseline AK for Newly Generated Waste (P400A)
8. RPT-TRUW-86, Identification of Pack Dates for Waste Potentially Included in the AMWTP Inventory (P1031A)
9. CCP-AK-INL-004, Central Characterization Project Acceptable Knowledge Summary Report for Rocky Flats Combustibles and Plastic Stored at the Idaho National Laboratory: Waste Stream ID-RF-S5300-A, Rev. 1 (P633A)

Container Information:

Drum	RTR Batch	Historical ID	Pack Date	Prefix Date Range for IDC RF-330 [5]	Hist. Gross Weight (lb)	Scale Weight (lb)	NCR #	AKR Rev. #
10016245	RTR14-00027	IDRF007500120	07/21/81	09/14/71 – 07/24/81	*485.02	132.30	84011	0

*The difference in historical gross weight and the scale weight is believed to be a typo in WTS.

Background:

The Rocky Flats (RF) waste container identified above was examined by RTR. Based on the observed container contents, the RTR operator recommended an IDC change from the historical IDC, RF-425, Fluid Bed Ash, to RF-330, Paper and Rags - Dry.

Justification and/or Rationale

AK indicates that IDC RF-425 waste includes fluid bed ash generated from the combustion of combustible materials in the FBI pilot plant or the FBI demonstration unit. [1, 2, 3, 4]

AK indicates that IDC RF-330 waste is composed of Cloth, paper, and wood products including items such as wipes, towels, rags, coveralls, booties, gloves, HEPA filter frames, and lumber. Waste was packaged as a dry waste. Waste may also contain any amount of plastic, and rubber but may only contain <50% by volume metal and other inorganic material debris items (e.g., concrete, cement, leaded-glovebox gloves, surgeon's gloves, lead tape, and glass and metal items such as raschig rings, nails, cans, vials, bottles, lead sheeting, bolts, pipe, welding rods, batteries, tools, and wire). Absorbent may have been added to waste. [1, 2, 3, 4, 9] The container contents identified by RTR are more consistent with the RF-330 waste than with the RF-425 waste.

Waste Stream or IDC: IDC RF-425 AKR Number: AKR-14-821

Batch Number: See attached Container ID: See attached

Inconsistency: IDC change from RF-425 to RF-330

The packaging identified by RTR is consistent with expected variation of the packaging configuration for IDC RF-330. (1, 3, 4)

The historical data are consistent with the recommended IDC change to RF-330. The difference in historical gross weight and the AMWTP scale weight is believed to be a typo in WTS. The historical prefix assigned to this container was associated with RF-330 when the container was packed (8) and the container pack date is included within the historical pack date range for RF-330 (August 1971 – June 1994). (7, 8)

IDC RF-425 is assigned WMC S3111 (Fluid Bed Ash). IDC RF-330 is assigned WMC S5300 (Organic Debris) which more accurately reflects the physical form of the waste identified in the RTR.

The HWNs assigned to RF-425 by the generator are D007, F001-F003, and F005. IDC RF-425 is not approved supercompactor feedstock. The HWNs assigned to RF-330 under CCP WSPF ID-RF-S5300-A are identical to those assigned under WSPF BN510.3 (D004 – D011, D022, D027 – D030, D032, D033, D034, D037, D043, F001, F002, F004 – F007, and F009). (5, 6, 8)

Resolution and Corrective Actions

AK recommends an IDC change from RF-425 to RF-330 for the container listed above. This evaluation is based on the AK information, historical drum information, and the RTR observations. This AKR will be used to close the related NCR.

AMWTP Advanced Mixed Waste Treatment Project	AK Source Document Review Summary	Form-1068, Rev. 4 Effective: 01/08/09 Page 1 of 1

Implementing Document: MP-TRUW-8.13

1. Source Document Tracking Number: U210A	2. Revision: 3

RECORD
U210AR3
SWALKER
10/24/2011

3. Category

- ☐ Published Documentation
- ☐ Correspondence
- ☑ Unpublished Documentation
- ☐ Discrepancy

4. Title/Description Information: TRU Waste Management AK Checklist, Advanced Mixed Waste Treatment Faciltiy, Rev. 0, May 10, 2005, Rev. 1, August 10, 2006, Rev. 2, August 13, 2007, and Rev. 3, August 11, 2010.

Document Number: Form-1066
Revision: 4
Author: AMWTP
Date: 10/04/2011

5. AK Element	6. Generator Or Waste Type(s)	7. Location in Source Doc.	8. AK Information Summary:
N/A			

9. Document Summary:

Form-1066 is automatically updated as the Form-1068s for the AK source documents are completed or updated. Periodically the Form-1066 is printed to generate a record.

10. Source Document Data Limitations (if any):

Changes, updates, and corrections are continually being made to the database that generated this record; therefore, this record of Form-1066 may not identify all applicable documents.

11. AK Expert:	Tim Venneman		10/17/2011
	Print	Sign	Date

Implementing Document: MP-TRUW-8.13

Generator Site: AMWTP (BN) Rev 4

AK Information	AK#<1>	Source Document Reference Number
Generator Site TRU Waste Management Program (WM) information		
Map of the site with the areas and facilities involved in TRU waste generation, treatment, and storage identified.	WM1	P1351A, P365A, P374A, P658A, P659A, P662A, P667A, P742S, P755A, P768A, P780S, P816A, P953A
Facility mission description as related to TRU mixed waste generation and management and as related to radionuclide-bearing materials and their management.	WM2	P1116S, P1141S, P1142S, P1351A, P386A, P393A, P400A, P658A, P659A, P662A, P667A, P744A, P860S, P868A
Description of the operations that generate TRU mixed waste at the site, and of the specific site locations and operations relative to the isotopic composition of the TRU wastes they generated.	WM3	C1010A, C1011A, C1018A, C1022A, C191A, C207A, C503A, C522A, C790S, P1030A, P1092S, P1093S, P1094S, P1095S, P1096S, P1097S, P1099S, P1103S, P1104S, P1105S, P1106S, P1107S, P1112A, P1120S, P1121A, P1122A, P1123A, P1126A, P1127A, P1128S, P1129S, P1139S, P1223A, P1358A, P1365A, P387A, P388A, P389A, P390A, P391A, P392A, P393A, P400A, P403A, P404A, P405A, P413A, P414A, P415A, P416A, P433A, P439A, P595A, P612A, P613A, P614A, P615A, P616A, P617A, P618A, P619A, P620A, P658A, P659A, P662A, P667A, P740S, P744A, P753A, P758A, P768A, P807A, P841A, P859S, P953A
Waste identification or categorization schemes used at the facility including codes that correlate to a specific isotopic distribution and a description of the isotopic composition of each waste stream.	WM4	C453A, C454A, C459A, C507A, C522A, C546S, C566S, C840S, C841S, P1030A, P1358A, P141A, P393A, P399A, P400A, P439A, P567A, P595A, P658A, P659A, P662A, P670A, P744A, P856A, P860S, P888A
Types and quantities of TRU waste generated, including historical generation through future projections.	WM5	C1011A, C1016A, C1018A, C1023A, C191A, C507A, C535A, C618A, C850A, C869S, P1030A, P1099S, P1108A, P1358A, P1364A, P1365A, P364A, P365A, P393A, P394A, P395A, P400A, P439A, P567A, P595A, P612A, P613A, P614A, P615A, P616A, P617A, P618A, P619A, P620A, P654S, P655S, P658A, P659A, P662A, P743A, P744A, P745A, P753A, P755A, P758A, P768A, P816A, P841A, P859S, P860S
Correlation of waste streams generated from the same building and process, as appropriate.	WM6	C1018A, C544A, D077A, P1030A, P1358A, P1364A, P1365A, P365A, P393A, P400A, P403A, P414A, P439A, P567A, P595A, P654S, P658A, P659A, P662A, P667A, P744A, P758A, P816A, P841A

Implementing Document: MP-TRUW-8.13

AK Information	AK#<1>	Source Document Reference Number
Generator Site TRU Waste Management Program (WM) information		
Assessment of operations to determine if the TRU waste materials at the generator site meet the definition of defense waste, High-Level waste or Spent Nuclear Fuel as specified in the WIPP WAC.	WM7	C191A, C329A, C559S, P1030A, P1358A, P330A, P400A, P417A, P418A, P439A, P649A, P650A, P658A, P659A, P662A, P744A, P757A, P841A, U216S
Waste certification procedures for retrievably stored and newly generated wastes to be sent to the Waste Isolation Pilot Plant (WIPP) facility.	WM8	C274A, C455A, C456A, C540S, C541S, C545S, C547S, C548S, C560S, C561S, C562S, C563S, C564S, C565S, C567S, C592S, C593S, C594S, C595S, C596S, C597S, C598S, C600S, C606S, C608S, C609S, C610S, C630S, C631S, C788S, C789S, C853S, C866S, C869S, C941A, C942A, C954S, P028A, P1118A, P1124S, P1358A, P396A, P413A, P441A, P658A, P659A, P662A, P682S, P889S, U177A, U178A, U179A, U180A, U181A, U182A
<1> The AK#s are to be used in the Acceptable Knowledge Source Document Summary to aid in identifying the location of program and waste stream-specific elements within a given document.		

All required AK information has been compiled and tracking numbers assigned.

AK Expert: TIM VIENNEMAN Date: 10-18-11
Print/Sign Date

Site Project Manager: Steve Carpenter Date: 10.18.11
Print/Sign

Waste Stream or Waste Type Description: Supercompacted Debris

Waste Stream or IDC Number: BN510.3

AK Information	AK#<1>	Source Document Reference Number
Generator site TRU waste stream (WS) - specific information		
Information identifying the building(s) and/or area (s) from which TRU waste was or is generated.	WS1	C018A, C047A, C048A, C053A, C067A, C072A, C074A, C082A, C087A, C1015A, C1025A, C1029A, C102A, C1035A, C1036A, C1041A, C1042A, C1051A, C1052A, C1054S, C1055S, C1073A, C1076A, C1080A, C1081S, C1082A, C1085A, C1087S, C1089A, C1091S, C1093A, C1116S, C1118S, C1120S, C1121S, C1122A, C1125S, C1126S, C1127S, C1128S, C1129S, C1138S, C115A, C1169S, C1215S, C1216S, C1217S, C1218S, C1219S, C1221S, C1235S, C1237S, C1239S, C1240S, C1242S, C1243S, C1265S, C1266S, C1267S, C1268S, C1271S, C1280A, C1281A, C1284A, C1309A, C1317S, C1325A, C1326A, C1347A, C1348S, C1349A, C1361S, C155A, C162A, C170A, C171A, C182A, C184A, C185A, C254A, C289A, C295A, C296A, C299A, C320A, C322A, C344A, C351A, C358A, C375A, C378A, C381A, C385A, C386A, C387A, C388A, C389A, C390A, C391A, C393A, C394A, C395A, C396A, C397A, C398A, C399A, C400A, C401A, C402A, C403A, C405A, C406A, C408A, C409A, C410A, C412A, C413A, C414A, C417A, C418A, C419A, C420A, C421A, C422A, C423A, C424A, C425A, C429A, C430A, C431A, C433A, C434A, C435A, C436A, C437A, C438A, C439A, C443A, C444A, C445A, C446A, C447A, C448A, C449A, C450A, C458A, C461A, C462A, C463A, C464A, C465A, C466A, C467A, C468A, C470A, C472A, C473A, C478A, C486A, C488A, C490A, C491A, C522A, C533A, C557A, C574S, C576S, C579A, C580A, C603A, C618A, C789S, C822S, C842S, C852A, C865A, C869S, D007A, D023A, D029A, D030A, D061A, D094A, D096A, D099S, D100A, D107A, D108S, D109A, P001A, P006A, P012A, P014A, P016A, P024A, P035A, P037A, P038A, P049A, P052A, P058A, P060A, P061A, P062A, P067A, P076A, P079A, P082A, P083A, P090A, P097A, P098A, P1030A, P1031A, P104A, P109A, P113A, P117A, P127A, P1319A, P1320A, P1322A, P1353A, P1365A, P1366A, P1379A, P1380A, P1381A, P1382A, P1384S, P1385S, P1387S, P1388A, P1389A, P1391A, P1392A, P1393A, P1396S, P1403S, P1405A, P1417A, P1418A, P1419A, P1466S, P1472S, P1473A, P1483A, P1489S, P1496S, P1498S, P1501S,

Information identifying the building(s) and/or area (s) from which TRU waste was or is generated.	WS1	P1502S, P1514S, P1537A, P153A, P1540S, P1541S, P1547S, P1548A, P1549A, P1554S, P1557S, P1558S, P1560S, P1561S, P1563S, P1565S, P1570S, P1588S, P1591S, P1635S, P164A, P1655S, P1658S, P1672S, P167A, P1685S, P1704S, P1723S, P1724S, P1725S, P1726S, P1727S, P1742S, P1770A, P1771S, P1775S, P1776S, P1779S, P1781S, P1783S, P1795S, P1797S, P1799S, P1801S, P1802S, P1803S, P1804S, P1806S, P1810S, P1811S, P1812S, P1813S, P1814S, P1815S, P1823A, P1825A, P1826A, P1827A, P1829A, P1830A, P1839A, P1840A, P1841A, P1842A, P1843A, P1847S, P1850S, P1851A, P1852A, P1853A, P1854A, P1855A, P1864A, P1871S, P1984S, P1985S, P1987A, P1988A, P198A, P1996A, P1998A, P1999A, P2001A, P2002A, P2008A, P2010A, P2025A, P2043S, P2044S, P2054S, P2064S, P221A, P222A, P223A, P224A, P225A, P312A, P319A, P328A, P333A, P335A, P336A, P345A, P347A, P350A, P351A, P352A, P357A, P368A, P369A, P370A, P380A, P381A, P385A, P400A, P405A, P414A, P417A, P418A, P423A, P435S, P439A, P442A, P443A, P444A, P448A, P449A, P450A, P451A, P452A, P453A, P454A, P455A, P456A, P460A, P461A, P462A, P463A, P469A, P475A, P477A, P478A, P479A, P480A, P481A, P482A, P484A, P485A, P486A, P487A, P489A, P490A, P491A, P492A, P493A, P498A, P499A, P501A, P503A, P504A, P505A, P506A, P507A, P509A, P510A, P511A, P512A, P516A, P517A, P518A, P519A, P520A, P522A, P523A, P524A, P525A, P526A, P527A, P540A, P544A, P545A, P546A, P550A, P551A, P593A, P594A, P599A, P604A, P610A, P621A, P632A, P633A, P635A, P636A, P637A, P638A, P649A, P658A, P659A, P662A, P667A, P671S, P673A, P679A, P680A, P683S, P689A, P699A, P700S, P703A, P708A, P709A, P710A, P711A, P712A, P715A, P717A, P723S, P728A, P733S, P736A, P741A, P744A, P746A, P751A, P755A, P759S, P816A, P834A, P840A, P842A, P850A, P861A, P888A, P890A, P953A, U013A, U032A, U043A, U047A, U052A, U056A, U059A, U069A, U077A, U126A, U139A, U141A, U145A, U146A, U148A, U151A, U153A, U154A, U155A, U156A, U157A, U158A, U159A, U160A, U161A, U162A, U168A, U169A, U173A, U187A, U190A, U195A, U198A, U202A, U203A, U204A, U207A, U215A, U223A, U224A, U225A, U237S, U313S, U314S, U330S, U333A, U340A, U343S, U346S, U351S, U352S, U353S, U361S, U378S, U381S, U385S, U386S, U391S, U393S, U394S, U416S, U418S, U419S, U420S, U421S, U442A

Waste stream volume and time period of generation.	WS2	C048A, C072A, C1015A, C1023A, C1045A, C1051A, C1054S, C1069A, C1071S, C1081S, C1089A, C1090S, C1118S, C1130A, C1146S, C1161S, C118A, C1196S, C1202S, C1223S, C1225S, C1226S, C1231S, C1235S, C1239S, C1242S, C1243S, C1265S, C1266S, C1267S, C1282S, C1309A, C1323A, C1328S, C1329S, C1330A, C1347A, C1352S, C1354S, C254A, C267A, C289A, C292A, C294A, C295A, C296A, C322A, C348A, C359A, C372A, C375A, C379A, C424A, C461A, C463A, C465A, C467A, C472A, C485A, C499A, C507A, C522A, C526A, C534A, C535A, C543S, C557A, C574S, C576S, C579A, C580A, C603A, C620A, C842S, C850A, C851A, C855A, C856A, C861A, C864S, C865A, C869S, C875S, C946S, D029A, D030A, D040A, D061A, D099S, D107A, P024A, P052A, P061A, P090A, P1030A, P1031A, P1101A, P1109A, P113A, P127A, P1351A, P1365A, P1366A, P1374A, P1379A, P1380A, P1381A, P1382A, P1403S, P1417A, P1473A, P1483A, P1517S, P153A, P1563S, P1565S, P1621S, P164A, P1655S, P1675S, P1677S, P1678S, P1683S, P1686S, P1687S, P1725S, P1726S, P1727S, P1741S, P1742S, P1743S, P1793S, P1797S, P1804S, P1806S, P1819A, P1823A, P1825A, P1826A, P1839A, P1840A, P1841A, P1842A, P1843A, P1847S, P1851A, P1852A, P1853A, P1854A, P1855A, P1864A, P1987A, P1988A, P1996A, P1998A, P1999A, P2000A, P2001A, P2002A, P2008A, P2010A, P2023A, P2025A, P205A, P221A, P222A, P223A, P224A, P225A, P237A, P246A, P318A, P319A, P328A, P333A, P354A, P357A, P364A, P365A, P368A, P380A, P395A, P400A, P417A, P418A, P439A, P442A, P443A, P461A, P462A, P469A, P482A, P486A, P487A, P498A, P499A, P501A, P505A, P506A, P507A, P509A, P511A, P517A, P519A, P522A, P523A, P524A, P567A, P593A, P604A, P610A, P621A, P632A, P633A, P635A, P636A, P637A, P638A, P649A, P656A, P658A, P659A, P662A, P671S, P673A, P680A, P708A, P709A, P710A, P711A, P712A, P715A, P717A, P728A, P743A, P744A, P746A, P751A, P754A, P755A, P758A, P759S, P826A, P838A, P840A, P842A, P850A, P861A, P888A, P890A, U022A, U059A, U069A, U122A, U126A, U127A, U139A, U141A, U142A, U146A, U148A, U154A, U159A, U166A, U187A, U197A, U198A, U202A, U207A, U215A, U218A, U223A, U224A, U225A, U227S, U228S, U229S, U235S, U236S, U237S, U306S, U325S, U330S, U333A, U339S, U343S, U344S, U345S, U351S, U353S, U370S, U374S, U375S, U385S, U386S, U391S, U416S

Waste generating process description for each building, including processes with U134 waste generation, if applicable and process flow diagrams. See instructions if process flow diagrams are not available.	WS3	C005A, C008A, C014A, C018A, C047A, C050A, C053A, C061A, C082A, C087A, C100A, C1029A, C1035A, C1040S, C1041A, C1042A, C1051A, C1080A, C1082A, C1086S, C1087S, C1091S, C1093A, C1118S, C1120S, C1121S, C1122A, C1133S, C1144S, C1147S, C115A, C1160S, C1161S, C1164S, C1165S, C1168S, C1170S, C1180S, C1196S, C1197S, C1202S, C1208S, C1213S, C1217S, C1219S, C1221S, C1230S, C1239S, C1240S, C1244S, C1260S, C1265S, C1266S, C1267S, C1268S, C1269S, C1270S, C1271S, C1280A, C1281A, C1347A, C1348S, C171A, C175A, C180A, C181A, C184A, C185A, C254A, C257A, C258A, C260A, C444A, C458A, C466A, C473A, C481A, C574S, C587A, C852A, D037A, D087S, D096A, D099S, D107A, D109A, P001A, P012A, P014A, P015A, P016A, P024A, P035A, P037A, P038A, P039A, P049A, P052A, P053A, P055A, P056A, P058A, P059A, P060A, P061A, P062A, P067A, P070A, P076A, P078A, P079A, P081A, P082A, P083A, P092A, P096A, P097A, P098A, P1030A, P103A, P104A, P106A, P109A, P110A, P114A, P117A, P124A, P1319A, P1320A, P1322A, P1325A, P1345A, P1346A, P1347A, P1348A, P1349A, P1350A, P1352A, P1365A, P1366A, P1379A, P1380A, P1381A, P1382A, P1388A, P1392A, P1393A, P1396S, P1403S, P1417A, P1418A, P1419A, P1466S, P1472S, P1483A, P1488S, P1489S, P1491S, P1493S, P1494S, P1495S, P1496S, P1500S, P1501S, P1502S, P1505S, P1507S, P1518A, P1528S, P1529S, P1530S, P1532S, P1533S, P1534S, P1535S, P1537A, P1540S, P1541S, P1542S, P1544S, P1547S, P1553S, P1554S, P1555S, P1556S, P1557S, P1559S, P1560S, P1561S, P1563S, P1566S, P1568S, P1581S, P1582S, P1584S, P1586S, P1587S, P1588S, P1590S, P1591S, P1632S, P1634S, P1638S, P1639S, P163A, P1640S, P1641S, P1642S, P1644S, P1647S, P164A, P1656S, P1657S, P1658S, P1671S, P1672S, P1675S, P1677S, P1678S, P1679S, P167A, P1680S, P1682S, P1683S, P1684S, P1686S, P1687S, P1688S, P1689S, P1692S, P1693S, P1694S, P1699S, P1701S, P1704S, P1705S, P1708S, P1710S, P1711S, P1712S, P1715S, P1716S, P1717S, P1723S, P1724S, P1725S, P1726S, P1727S, P1730S, P1735S, P1741S, P1742S, P1743S, P1745S, P1748S, P1751S, P1754S, P1755S, P1756S, P175A, P1762S, P1763S, P1765S, P1766S, P1767S, P1770A, P1772S, P1775S, P1778S, P1780S, P1787S, P1790S, P1792S, P1793S, P1794A, P1796S, P1797S, P1798S, P1799S, P1801S, P1802S, P1804S, P1805S, P1806S, P1811S, P1812S, P1813S, P1814S,

Waste generating process description for each building, including processes with U134 waste generation, if applicable and process flow diagrams. See instructions if process flow diagrams are not available.	WS3	P1815S, P1823A, P1825A, P1826A, P1829A, P1830A, P1839A, P1840A, P1841A, P1842A, P1843A, P1847S, P1849S, P1851A, P1852A, P1853A, P1854A, P1855A, P1864A, P1985S, P1987A, P1988A, P1996A, P1998A, P1999A, P2001A, P2002A, P2008A, P2010A, P2025A, P2043S, P2044S, P205A, P221A, P222A, P223A, P224A, P225A, P282A, P312A, P319A, P335A, P341A, P345A, P347A, P352A, P357A, P368A, P369A, P380A, P400A, P404A, P405A, P414A, P417A, P418A, P423A, P435S, P439A, P442A, P443A, P444A, P448A, P449A, P450A, P451A, P452A, P453A, P454A, P455A, P456A, P460A, P461A, P462A, P463A, P469A, P482A, P483A, P485A, P486A, P487A, P489A, P490A, P491A, P492A, P493A, P504A, P505A, P507A, P511A, P516A, P517A, P518A, P519A, P520A, P522A, P523A, P524A, P526A, P527A, P546A, P558A, P594A, P599A, P604A, P610A, P621A, P632A, P633A, P635A, P636A, P637A, P638A, P649A, P658A, P659A, P662A, P667A, P671S, P673A, P680A, P683S, P689A, P699A, P708A, P715A, P717A, P722A, P723S, P728A, P743A, P744A, P746A, P751A, P758A, P759S, P840A, P842A, P850A, P861A, P888A, P890A, U011A, U015A, U022A, U047A, U052A, U056A, U073A, U077A, U086A, U091A, U126A, U132A, U155A, U156A, U157A, U158A, U168A, U170A, U310A, U330S, U333A, U340A, U343S, U344S, U352S, U361S, U364S, U369S, U370S, U396S, U397S, U398S, U405S, U413S, U442A

Material inputs or other information identifying chemical content, and event or process that may have modified the chemical properties after generation. Include data for newly generated waste obtained through VE and/or radiography, information demonstrating neutralization of U134 waste and chemical composition that could affect the isotopic distribution.	WS4	C027A, C041A, C047A, C050A, C051A, C060A, C063A, C064A, C070A, C072A, C076A, C078A, C081A, C083A, C084A, C086A, C090A, C091A, C093A, C094A, C095A, C096A, C099A, C100A, C101A, C102A, C1033S, C1040S, C1041A, C1042A, C1051A, C105A, C1060S, C107A, C1081S, C1088A, C1090S, C1118S, C1124S, C1133S, C1134A, C1143S, C1144S, C1145S, C1147S, C1149S, C1150S, C1151S, C1152S, C1154S, C1156S, C115A, C1160S, C1163S, C1165S, C1169S, C1175S, C1178S, C1179S, C1188S, C1193S, C1195S, C1197S, C1199S, C119A, C1201S, C1205S, C1207S, C1212S, C1213S, C1214S, C1217S, C1218S, C1219S, C1221S, C1225S, C1230S, C1235S, C1238S, C1239S, C123A, C1242S, C1244S, C1255S, C1256S, C1260S, C1265S, C1266S, C1267S, C1269S, C1270S, C1271S, C1280A, C1309A, C1317S, C1318A, C1319S, C1320S, C1321S, C1325A, C1348S, C155A, C162A, C178A, C179A, C181A, C184A, C186A, C187A, C198A, C205A, C245A, C246A, C251A, C253A, C255A, C257A, C258A, C259A, C260A, C261A, C262A, C263A, C269A, C290A, C297A, C298A, C301A, C305A, C306A, C307A, C308A, C309A, C310A, C322A, C342A, C344A, C349A, C350A, C354A, C356A, C359A, C373A, C375A, C385A, C409A, C419A, C423A, C430A, C443A, C446A, C447A, C449A, C450A, C451A, C452A, C458A, C461A, C463A, C464A, C465A, C466A, C467A, C468A, C470A, C471A, C472A, C473A, C477A, C479A, C480A, C481A, C484A, C486A, C488A, C489A, C490A, C493A, C496A, C503A, C505A, C533A, C546S, C574S, C858S, C861A, C865A, C945A, D035A, D036A, D037A, D041A, D044A, D045A, D047A, D048A, D052A, D053A, D055A, D059A, D061A, D070A, D076A, D087S, D095A, D096A, D099S, D107A, D109A, P002A, P006A, P015A, P016A, P021A, P024A, P033A, P035A, P037A, P038A, P052A, P053A, P056A, P060A, P061A, P062A, P067A, P068A, P076A, P078A, P079A, P081A, P083A, P091A, P092A, P094A, P096A, P098A, P1030A, P106A, P108A, P109A, P1101A, P113A, P114A, P1291S, P1292S, P1293S, P1295S, P1296S, P1297S, P1299S, P1300S, P1301S, P1302S, P1303S, P1304S, P1305S, P1306S, P1307S, P1308S, P1317S, P1318S, P1321A, P1332S, P1345A, P1346A, P1347A, P1348A, P1349A, P1350A, P1352A, P1365A, P1366A, P1376S, P1377S, P1378S, P1379A, P1380A, P1381A, P1382A, P1384S, P1387S, P1388A, P1389A, P1390A, P1391A, P1392A, P1393A, P1403S, P1405A, P1417A, P1418A, P1419A, P1432S, P1461S, P1466S, P1472S, P1473A, P1474S, P1483A, P1489S, P1494S, P1496S,

Material inputs or other information identifying chemical content, and event or process that may have modified the chemical properties after generation. Include data for newly generated waste obtained through VE and/or radiography, information demonstrating neutralization of U134 waste and chemical composition that could affect the isotopic distribution.	WS4	P1501S, P1502S, P1505S, P1506S, P1507S, P1511S, P1512S, P1514S, P1515S, P151A, P1521S, P1528S, P1529S, P1530S, P1531S, P1532S, P1533S, P1534S, P1536S, P1537A, P1538S, P1542S, P1544S, P1545S, P1546S, P1547S, P1548A, P1549A, P1551S, P1553S, P1560S, P1563S, P1566S, P1569S, P1570S, P1571S, P1572S, P1573S, P1574S, P1575S, P1576S, P1577S, P1578S, P1580S, P1581S, P1582S, P1583S, P1585S, P1586S, P1587S, P1590S, P1591S, P1593S, P1594S, P1595S, P1596S, P1631S, P1634S, P163A, P1641S, P1642S, P1644S, P1647S, P1649S, P164A, P1654S, P1655S, P1657S, P1658S, P1666S, P1670S, P1673S, P1676S, P1681S, P1682S, P1688S, P1689S, P1691S, P1692S, P1693S, P1694S, P1699S, P1701S, P1704S, P1705S, P1706S, P1708S, P1709S, P1710S, P1711S, P1712S, P1714S, P1715S, P1716S, P1717S, P1719S, P1723S, P1725S, P1726S, P1727S, P1728S, P1729S, P1730S, P1731S, P1738S, P1742S, P1744S, P1746S, P1747S, P1748S, P1749S, P1751S, P1753S, P1754S, P1755S, P1756S, P1763S, P1765S, P1766S, P1767S, P1768S, P1769S, P1771S, P1775S, P1781S, P1782S, P1788S, P1793S, P1794A, P1797S, P1810S, P1823A, P1825A, P1826A, P1827A, P1828A, P1829A, P1830A, P1831S, P1832S, P1839A, P1840A, P1841A, P1842A, P1843A, P1847S, P1851A, P1852A, P1853A, P1854A, P1855A, P1864A, P1962S, P1984S, P1987A, P1988A, P1996A, P1998A, P1999A, P2001A, P2002A, P2008A, P2010A, P2025A, P2044S, P205A, P2061S, P207A, P214A, P215A, P221A, P222A, P223A, P224A, P225A, P282A, P283A, P284A, P285A, P305A, P306A, P307A, P308A, P310A, P313A, P319A, P324A, P328A, P334A, P335A, P336A, P337A, P341A, P343A, P344A, P345A, P347A, P350A, P351A, P354A, P356A, P357A, P359A, P365A, P368A, P369A, P380A, P393A, P400A, P401A, P403A, P404A, P406A, P409A, P417A, P418A, P423A, P426S, P435S, P439A, P442A, P443A, P444A, P446A, P448A, P449A, P450A, P451A, P452A, P453A, P454A, P455A, P456A, P457A, P458A, P460A, P461A, P462A, P463A, P469A, P475A, P485A, P486A, P487A, P489A, P490A, P491A, P492A, P493A, P497A, P498A, P499A, P501A, P503A, P504A, P505A, P506A, P509A, P512A, P516A, P517A, P518A, P519A, P520A, P521A, P522A, P523A, P524A, P527A, P532A, P534A, P539A, P545A, P546A, P552A, P591A, P592A, P593A, P594A, P599A, P604A, P610A, P621A, P632A, P633A, P635A, P636A, P637A, P638A, P649A, P650A, P655S, P657S, P658A, P659A, P662A, P667A,

Material inputs or other information identifying chemical content, and event or process that may have modified the chemical properties after generation. Include data for newly generated waste obtained through VE and/or radiography, information demonstrating neutralization of U134 waste and chemical composition that could affect the isotopic distribution.	WS4	P673A, P680A, P700S, P708A, P709A, P710A, P711A, P712A, P715A, P717A, P721S, P722A, P726S, P728A, P744A, P751A, P752A, P755A, P759S, P808S, P840A, P842A, P850A, P861A, P867S, P879S, P888A, P890A, P953A, U005A, U013A, U019A, U020A, U022A, U030A, U032A, U043A, U047A, U062A, U086A, U097A, U113A, U126A, U132A, U140A, U141A, U156A, U157A, U159A, U164A, U172A, U185A, U189A, U192A, U195A, U197A, U202A, U204A, U205A, U208A, U218A, U308S, U309S, U310A, U317A, U318A, U319A, U326S, U327S, U328S, U330S, U333A, U343S, U344S, U345S, U353S, U355S, U356S, U357S, U364S, U369S, U370S, U374S, U375S, U381S, U385S, U386S, U389S, U390S, U391S, U392S, U397S, U398S, U401S, U402S, U404S, U405S, U407S, U408S, U409S, U416S, U418S, U419S, U420S, U421S, U442A

Material inputs or other information identifying physical waste form, and event or process that may have modified the physical properties after generation. Include data obtained through RTR or VE of newly generated waste and physical composition that could affect the isotopic distribution.	WS5	C005A, C007A, C015A, C018A, C022A, C051A, C063A, C066A, C089A, C090A, C1015A, C1026A, C1029A, C103A, C1041A, C1045A, C104A, C1051A, C1052A, C1060S, C1065A, C1066S, C1067A, C1077A, C1081S, C1088A, C1090S, C1094S, C1118S, C1123A, C1124S, C1130A, C1131A, C1134A, C1152S, C1154S, C1208S, C120A, C1215S, C1216S, C1217S, C1218S, C1219S, C1227S, C1231S, C1235S, C1242S, C1244S, C1265S, C1266S, C1267S, C1270S, C1271S, C1276A, C1277A, C1278A, C1279A, C1280A, C1284A, C1302A, C1309A, C1317S, C1318A, C1326A, C1331S, C1334A, C1347A, C1348S, C1349A, C1356A, C1361S, C184A, C186A, C187A, C204A, C254A, C255A, C257A, C258A, C280A, C289A, C293A, C294A, C295A, C296A, C298A, C299A, C313A, C315A, C316A, C319A, C323A, C330A, C332A, C335A, C337A, C348A, C349A, C350A, C370A, C373A, C375A, C376A, C378A, C379A, C383A, C409A, C419A, C426A, C429A, C430A, C440A, C446A, C447A, C448A, C449A, C450A, C452A, C457A, C461A, C463A, C464A, C465A, C466A, C467A, C468A, C470A, C472A, C473A, C477A, C478A, C479A, C481A, C485A, C486A, C489A, C490A, C491A, C496A, C499A, C504A, C505A, C515A, C520A, C521A, C526A, C530A, C531A, C533A, C534A, C546S, C550S, C566S, C574S, C620A, C789S, C834A, C840S, C841S, C842S, C849A, C851A, C856A, C861A, C865A, C869S, D022A, D042A, D049A, D061A, D094A, D096A, D099S, D107A, D108S, D109A, P001A, P006A, P008A, P009A, P012A, P014A, P015A, P016A, P017A, P021A, P022A, P024A, P032A, P035A, P037A, P038A, P039A, P043A, P049A, P052A, P053A, P056A, P058A, P060A, P061A, P063A, P064A, P076A, P083A, P090A, P094A, P096A, P097A, P098A, P1030A, P104A, P1089A, P1101A, P1109A, P1137A, P113A, P116A, P117A, P1319A, P1321A, P1339A, P1345A, P1346A, P1347A, P1348A, P1349A, P1350A, P1351A, P1352A, P1364A, P1365A, P1366A, P1374A, P1379A, P1380A, P1381A, P1382A, P1388A, P1390A, P1391A, P1392A, P1393A, P1396S, P1403S, P1417A, P1419A, P141A, P1432S, P1466S, P1473A, P1474S, P1483A, P1488S, P1489S, P1491S, P1493S, P1495S, P1501S, P1506S, P1507S, P1521S, P1528S, P1529S, P1531S, P1532S, P1537A, P1547S, P1548A, P1549A, P154A, P1551S, P1557S, P1558S, P1559S, P1563S, P1566S, P1568S, P1578S, P1579S, P1580S, P1585S, P1586S, P1592S, P1593S, P1594S, P1595S, P1596S, P1634S, P1642S, P1644S, P1647S, P1649S, P1656S, P1657S, P1658S, P1666S, P1670S, P1673S, P1676S, P1681S,

Material inputs or other information identifying physical waste form, and event or process that may have modified the physical properties after generation. Include data obtained through RTR or VE of newly generated waste and physical composition that could affect the isotopic distribution.	WS5	P1704S, P1705S, P1709S, P1710S, P1711S, P1714S, P1715S, P1719S, P1725S, P1726S, P1727S, P1728S, P1729S, P1731S, P1747S, P1748S, P1751S, P1753S, P1755S, P1765S, P1766S, P1767S, P1769S, P1775S, P1779S, P1782S, P1787S, P1788S, P1793S, P1794A, P1796S, P1797S, P1799S, P1801S, P1812S, P1819A, P1823A, P1825A, P1826A, P1828A, P1829A, P1839A, P1840A, P1841A, P1842A, P1843A, P1847S, P1849S, P1850S, P1851A, P1852A, P1853A, P1854A, P1855A, P1864A, P1987A, P1988A, P1996A, P1998A, P1999A, P2001A, P2002A, P2007A, P2008A, P2010A, P2023A, P2025A, P2043S, P2044S, P2045S, P2049S, P2054S, P205A, P2064S, P207A, P211A, P212A, P213A, P214A, P215A, P216A, P221A, P222A, P223A, P224A, P225A, P237A, P282A, P283A, P305A, P306A, P312A, P316A, P319A, P328A, P333A, P334A, P335A, P336A, P342A, P343A, P344A, P345A, P347A, P350A, P351A, P354A, P356A, P357A, P365A, P368A, P370A, P372A, P380A, P381A, P384A, P385A, P393A, P399A, P400A, P417A, P418A, P423A, P435S, P439A, P441A, P442A, P443A, P444A, P448A, P449A, P450A, P451A, P452A, P453A, P454A, P455A, P456A, P460A, P461A, P462A, P463A, P465A, P469A, P475A, P486A, P487A, P489A, P490A, P491A, P492A, P493A, P498A, P499A, P501A, P502A, P503A, P504A, P505A, P506A, P507A, P509A, P510A, P511A, P512A, P516A, P517A, P518A, P519A, P520A, P521A, P522A, P523A, P524A, P525A, P526A, P527A, P532A, P539A, P544A, P545A, P546A, P553A, P556A, P567A, P593A, P594A, P599A, P604A, P610A, P621A, P632A, P633A, P635A, P636A, P637A, P638A, P649A, P650A, P654S, P657S, P658A, P659A, P662A, P667A, P670A, P673A, P680A, P683S, P699A, P700S, P708A, P709A, P710A, P711A, P712A, P715A, P717A, P721S, P722A, P726S, P727A, P728A, P735S, P736A, P741A, P744A, P746A, P751A, P752A, P758A, P759S, P816A, P834A, P838A, P840A, P842A, P847S, P850A, P859S, P861A, P878S, P880S, P881S, P882S, P888A, P890A, U004A, U009A, U022A, U028A, U097A, U113A, U126A, U139A, U141A, U145A, U146A, U153A, U154A, U156A, U157A, U159A, U166A, U175A, U176A, U184A, U187A, U189A, U190A, U191A, U192A, U195A, U197A, U198A, U204A, U205A, U206A, U207A, U208A, U218A, U219S, U220S, U223A, U224A, U225A, U230A, U306S, U312S, U317A, U318A, U319A, U326S, U327S, U328S, U330S, U333A, U339S, U343S, U344S, U345S, U351S, U353S, U361S, U370S, U372S, U374S, U375S, U380S, U381S, U383S, U384S, U385S, U386S, U391S, U393S,

Material inputs or other information identifying physical waste form, and event or process that may have modified the physical properties after	WS5	U397S, U401S, U402S, U404S, U408S, U416S, U418S, U419S, U420S, U421S, U422S, U435S, U442A

EPA hazardous waste constituents in the waste stream and Hazardous Waste Numbers assigned. Documentation regarding how the site has historically managed the waste, including the historical regulatory status of the waste (i.e., TRU mixed versus TRU nonmixed waste).	WS6	C021A, C048A, C060A, C064A, C070A, C076A, C078A, C079A, C081A, C083A, C084A, C091A, C093A, C094A, C095A, C096A, C099A, C101A, C102A, C1042A, C1051A, C1063S, C1065A, C1067A, C107A, C1081S, C1115A, C1134A, C1145S, C1146S, C1147S, C1149S, C1150S, C1154S, C1156S, C1160S, C1163S, C1178S, C117A, C1180S, C1188S, C1192S, C1193S, C1199S, C119A, C1201S, C1203S, C1205S, C1207S, C1214S, C1221S, C1235S, C1238S, C1239S, C123A, C1244S, C1255S, C1266S, C1267S, C1280A, C1317S, C1318A, C1319S, C1320S, C1321S, C1339S, C192A, C199A, C205A, C245A, C253A, C255A, C257A, C258A, C260A, C261A, C262A, C263A, C298A, C299A, C313A, C320A, C354A, C458A, C481A, C493A, C509A, C566S, C574S, C604A, C607A, C840S, C841S, C861A, C865A, C948S, D005A, D008A, D009A, D013A, D014A, D015A, D016A, D017A, D018A, D020A, D024A, D025A, D027A, D035A, D036A, D037A, D041A, D044A, D045A, D047A, D048A, D052A, D053A, D055A, D059A, D064A, D070A, D076A, D077A, D078A, D087S, D095A, D096A, D099S, D107A, D113S, D114A, D115S, D116A, P009A, P012A, P013A, P015A, P016A, P017A, P021A, P022A, P023A, P035A, P038A, P049A, P052A, P053A, P056A, P058A, P060A, P061A, P062A, P067A, P079A, P080A, P094A, P1030A, P1085S, P1086S, P1088S, P108A, P1101A, P1109A, P114A, P1326S, P1339A, P1346A, P1349A, P1350A, P1352A, P1374A, P1379A, P1380A, P1381A, P1382A, P1384S, P1389A, P1405A, P1407S, P1411S, P1412S, P1419A, P1466S, P1472S, P1483A, P1489S, P1494S, P1496S, P1501S, P1502S, P1507S, P151A, P1521S, P1528S, P1531S, P1532S, P1533S, P1535S, P1537A, P1540S, P1541S, P1545S, P1547S, P1548A, P1549A, P1553S, P1558S, P1570S, P1579S, P1586S, P1590S, P1593S, P1594S, P1631S, P1641S, P1644S, P1649S, P1666S, P1670S, P1673S, P1681S, P1714S, P1715S, P1723S, P1731S, P1740S, P1741S, P1742S, P1746S, P1748S, P1754S, P1755S, P1761S, P1765S, P1766S, P1768S, P1775S, P1788S, P1799S, P1810S, P1819A, P1823A, P1825A, P1826A, P1830A, P1839A, P1840A, P1841A, P1842A, P1843A, P1851A, P1852A, P1853A, P1854A, P1855A, P1987A, P1988A, P1996A, P1998A, P1999A, P2001A, P2002A, P2008A, P2010A, P2023A, P2025A, P2044S, P205A, P207A, P211A, P212A, P213A, P214A, P215A, P216A, P221A, P222A, P223A, P224A, P225A, P237A, P239A, P282A, P283A, P284A, P285A, P305A, P306A, P307A, P308A, P310A, P312A, P313A, P316A, P324A, P334A,

EPA hazardous waste constituents in the waste stream and Hazardous Waste Numbers assigned. Documentation regarding how the site has historically managed the waste, including the historical regulatory status of the waste (i.e., TRU mixed versus TRU nonmixed waste).	WS6	P335A, P336A, P337A, P351A, P356A, P357A, P365A, P368A, P380A, P393A, P400A, P417A, P418A, P435S, P439A, P442A, P443A, P444A, P448A, P449A, P450A, P451A, P452A, P453A, P454A, P455A, P456A, P460A, P461A, P462A, P486A, P487A, P489A, P490A, P491A, P492A, P503A, P505A, P506A, P509A, P512A, P517A, P519A, P520A, P527A, P532A, P539A, P592A, P593A, P594A, P599A, P604A, P610A, P632A, P633A, P635A, P636A, P637A, P638A, P649A, P650A, P658A, P659A, P662A, P667A, P673A, P680A, P708A, P709A, P710A, P711A, P715A, P717A, P728A, P729A, P733S, P743A, P744A, P751A, P838A, P840A, P842A, P850A, P859S, P861A, P890A, U005A, U011A, U015A, U020A, U022A, U030A, U046A, U059A, U060A, U062A, U082A, U085A, U086A, U087A, U088A, U089A, U090A, U097A, U102A, U103A, U113A, U142A, U184A, U185A, U190A, U192A, U199A, U205A, U206A, U208A, U218A, U236S, U308S, U309S, U320S, U330S, U333A, U343S, U344S, U355S, U356S, U357S, U374S, U375S, U385S, U386S, U389S, U390S, U391S, U398S, U402S, U407S, U408S, U409S

Specification of the isotopic ratios for the 10 WIPP-tracked radionuclides (241Am, 238PU, 239 Pu, 240 PU, 242Pu, 233U, 234U, 238 U, 90 Sr, and 137Cs) and the radionuclides comprising 95% of the hazard.	WS7	C002A, C072A, C1029A, C1041A, C1056S, C1065A, C1066S, C1067A, C1068S, C1081S, C1087S, C1090S, C1091S, C1094S, C1095S, C1133S, C1140S, C1142S, C1143S, C1144S, C1151S, C1152S, C1157S, C1161S, C1168S, C1169S, C1182S, C1188S, C1195S, C1196S, C1198S, C1200S, C1202S, C1211S, C1215S, C1216S, C1217S, C1218S, C1224S, C1225S, C1226S, C1227S, C1231S, C1232S, C1235S, C1243S, C1251S, C1258S, C1266S, C1280A, C1281A, C1309A, C130A, C134A, C137A, C174A, C180A, C184A, C210A, C221A, C255A, C256A, C281A, C285A, C291A, C338A, C348A, C351A, C354A, C358A, C368A, C370A, C371A, C373A, C378A, C379A, C380A, C381A, C383A, C384A, C385A, C387A, C388A, C389A, C390A, C391A, C393A, C394A, C396A, C400A, C401A, C402A, C404A, C405A, C406A, C408A, C409A, C410A, C412A, C413A, C414A, C416A, C417A, C418A, C419A, C420A, C421A, C422A, C423A, C425A, C426A, C427A, C428A, C429A, C430A, C431A, C432A, C433A, C434A, C435A, C436A, C437A, C438A, C439A, C440A, C441A, C442A, C445A, C446A, C447A, C448A, C449A, C450A, C452A, C453A, C464A, C465A, C466A, C467A, C468A, C469A, C470A, C471A, C472A, C477A, C479A, C485A, C488A, C489A, C490A, C491A, C494A, C505A, C506A, C508A, C517A, C523A, C551A, C552S, C566S, C603A, C604A, C840S, C841S, C865A, D022A, D051A, D099S, D101S, D107A, P016A, P024A, P035A, P038A, P053A, P056A, P061A, P062A, P067A, P076A, P078A, P079A, P081A, P083A, P090A, P092A, P094A, P098A, P1030A, P104A, P1109A, P113A, P115A, P117A, P1339A, P1346A, P1347A, P1349A, P1350A, P1351A, P1374A, P1379A, P1380A, P1381A, P1382A, P1387S, P1389A, P1390A, P1391A, P1392A, P1393A, P1403S, P1405A, P1466S, P1472S, P1483A, P1489S, P1491S, P1500S, P1506S, P1507S, P1521S, P1524S, P1529S, P1530S, P1532S, P1533S, P1534S, P1535S, P1536S, P1537A, P1540S, P1541S, P1542S, P1544S, P1547S, P1553S, P1555S, P1556S, P1557S, P155A, P1561S, P1563S, P1565S, P1566S, P1569S, P156A, P1572S, P1573S, P1574S, P1575S, P1576S, P1577S, P1579S, P1584S, P1585S, P1586S, P1589S, P1590S, P1591S, P1593S, P1594S, P1596S, P1634S, P163A, P1644S, P1647S, P1649S, P164A, P1657S, P1658S, P1666S, P1670S, P1673S, P1691S, P1705S, P1706S, P1708S, P1709S, P1711S, P1715S, P1716S, P1717S, P1719S, P1723S, P1728S, P1729S, P1730S, P1731S, P1735S, P1738S, P1741S, P1744S, P1746S, P1748S, P1753S, P1756S, P1758S, P1761S,

Specification of the isotopic ratios for the 10 WIPP-tracked radionuclides (241Am, 238PU, 239 Pu, 240 PU, 242Pu, 233U, 234U, 238 U, 90 Sr, and 137Cs) and the radionuclides comprising 95% of the hazard.	WS7	P1769S, P1771S, P1772S, P1778S, P1780S, P1788S, P1790S, P1792S, P1793S, P1795S, P1796S, P1804S, P1805S, P1806S, P1810S, P1819A, P1823A, P1825A, P1826A, P1839A, P1840A, P1841A, P1842A, P1843A, P1847S, P1851A, P1852A, P1853A, P1854A, P1855A, P1864A, P189A, P190A, P194A, P195A, P1987A, P1988A, P198A, P1996A, P1998A, P1999A, P2001A, P2002A, P2008A, P2010A, P2023A, P2025A, P221A, P222A, P223A, P224A, P227A, P230A, P231A, P232A, P233A, P234A, P235A, P236A, P240A, P282A, P283A, P294A, P295A, P305A, P306A, P307A, P312A, P319A, P322A, P348A, P349A, P353A, P354A, P355A, P357A, P368A, P380A, P381A, P385A, P398A, P400A, P417A, P418A, P423A, P435S, P439A, P442A, P443A, P448A, P449A, P452A, P453A, P454A, P455A, P456A, P460A, P461A, P462A, P463A, P467A, P469A, P472A, P482A, P486A, P487A, P489A, P490A, P491A, P492A, P493A, P499A, P501A, P502A, P503A, P504A, P505A, P506A, P507A, P509A, P510A, P511A, P512A, P513A, P514A, P517A, P518A, P519A, P520A, P521A, P522A, P523A, P524A, P525A, P526A, P527A, P532A, P539A, P540A, P543A, P544A, P545A, P546A, P547A, P548A, P549A, P550A, P551A, P553A, P554A, P555A, P558A, P593A, P594A, P604A, P610A, P611A, P621A, P622A, P632A, P633A, P635A, P636A, P637A, P638A, P649A, P650A, P658A, P659A, P662A, P673A, P680A, P699A, P703A, P708A, P709A, P710A, P711A, P712A, P715A, P719S, P721S, P728A, P743A, P744A, P745A, P751A, P759S, P834A, P838A, P840A, P842A, P850A, P861A, P888A, P890A, P953A, U022A, U047A, U073A, U126A, U137A, U139A, U141A, U142A, U147A, U153A, U154A, U155A, U156A, U157A, U158A, U159A, U160A, U161A, U162A, U166A, U168A, U169A, U170A, U172A, U173A, U184A, U185A, U187A, U189A, U190A, U192A, U195A, U198A, U199A, U202A, U203A, U205A, U208A, U220S, U235S, U237S, U306S, U310A, U311S, U320S, U330S, U331S, U333A, U336S, U337A, U338S, U339S, U342S, U343S, U344S, U345S, U347S, U351S, U352S, U361S, U370S, U372S, U381S, U383S, U385S, U386S, U388S, U389S, U391S, U396S, U397S, U398S, U400S, U405S, U406S, U412S, U414S, U415S, U416S, U418S, U419S, U420S, U421S, U440A, U442A, U444S

Implementing Document: MP-TRUW-8.13

AK Information	AK#<1>	Source Document Reference Number
Generator site TRU waste stream (WS) - specific information		
Documentation identifying the presence of prohibited items listed in Section C-1c of the WIPP-WAP.	WS8	C1029A, C1051A, C1052A, C1070A, C1131A, C1156S, C1276A, C1277A, C1280A, C1281A, C1299S, C1309A, C1310A, C1313A, C1317S, C1318A, C1320S, C1321S, C1331S, C1347A, C1348S, C1349A, C198A, C199A, C214A, C321A, C376A, C392A, C415A, C416A, C466A, C470A, C473A, C511A, C516A, C530A, C531A, C532A, C568S, C574S, C613S, C614S, C615S, C616S, C842S, C861A, D035A, D070A, D087S, D096A, D109A, P001A, P012A, P013A, P014A, P015A, P016A, P017A, P021A, P022A, P024A, P053A, P063A, P1030A, P1101A, P1319A, P1325A, P1351A, P1364A, P1365A, P1366A, P1379A, P1380A, P1381A, P1388A, P1389A, P1403S, P1405A, P1419A, P1466S, P1483A, P1823A, P1825A, P1826A, P1828A, P1829A, P1830A, P1839A, P1840A, P1841A, P1842A, P1843A, P1851A, P1852A, P1853A, P1854A, P1855A, P1987A, P1988A, P1996A, P1998A, P1999A, P2001A, P2002A, P2008A, P2010A, P2025A, P2045S, P2049S, P2050S, P2054S, P215A, P221A, P222A, P223A, P224A, P225A, P237A, P319A, P356A, P357A, P358A, P368A, P370A, P372A, P385A, P399A, P400A, P405A, P412A, P417A, P418A, P439A, P442A, P443A, P461A, P462A, P465A, P486A, P487A, P492A, P525A, P604A, P610A, P632A, P633A, P635A, P636A, P637A, P638A, P649A, P650A, P658A, P659A, P662A, P667A, P673A, P680A, P708A, P709A, P710A, P711A, P712A, P715A, P727A, P728A, P733S, P741A, P744A, P751A, P840A, P842A, P858A, P859S, P861A, P888A, P890A, U113A, U126A, U215A, U223A, U224A, U225A, U236S, U320S, U321A, U330S, U333A, U392S, U435S, U442A
<1> The AK#'s are to be used in the Acceptable Knowledge Source Document Summary to aid in the identification of program and waste stream-specific elements within a given document.		

All required AK information has been compiled and tracking numbers assigned.

AK Expert: Randall C. Morris — Print/Sign — Date: 09/11/14 — Date

Site Project Manager: Stan Capenter — Print/Sign — Date: 9.11.14

DIVIDER

PAGE

AMWTP Advanced Mixed Waste Treatment Project	AK Source Document Review Summary	Form-1068, Rev. 4 Effective: 01/08/09 Page 1 of 1

Implementing Document: MP-TRUW-8.13

RECORD
U214AR4
SWALKER
10/24/2011

1. Source Document Tracking Number: U214A	2. Revision: 4

3. **Category**

- ☐ Published Documentation
- ☐ Correspondence
- ☑ Unpublished Documentation
- ☐ Discrepancy

4. Title/Description Information:	Form 1066, TRUW Waste Management AK Checklist, Rocky Flats Plant, Rev. 0, August 11, 2003; Rev. 1a, March 1, 2004; Rev. 1b, March 9, 2004; Rev. 2, October 9, 2005; Rev. 3 October 13, 2005; Rev. 4 (with BN243) March 13, 2006; Rev. 5 (with BN252) March 13, 2006; Rev. 6 (with BN161) March 13, 2006; Rev. 7 (with BN004) March 30, 2006; Rev. 8 July 25, 2006; Rev. 9 August 13, 2007; Rev. 10, September 2, 2008; Rev. 11, August 11, 2010.

Document Number:	Form-1066
Revision:	Rev.12
Author:	AMWTP
Date:	10/04/2011

5. AK Element	6. Generator Or Waste Type(s)	7. Location in Source Doc.	8. AK Information Summary:
N/A			

9. Document Summary:

Form-1066 is automatically updated as the Form-1068s for the AK source documents are completed or updated. Periodically the Form-1066 is printed to generate a record.

10. Source Document Data Limitations (if any):

Changes, updates, and corrections are continually being made to the database that generated this record; therefore, this record of Form-1066 may not identify all applicable documents.

11. AK Expert:	Tim Venneman		10/17/2011
	Print	Sign	Date

Generator Site: Rocky Flats Plant (RF) Rev 12

AK Information	AK#<1>	Source Document Reference Number
Generator Site TRU Waste Management Program (WM) information		
Map of the site with the areas and facilities involved in TRU waste generation, treatment, and storage identified.	WM1	P053A, P209A, P368A, P373A, P431A, P432A, P436A, P442A, P443A, P621A, P632A, P633A, P634A, P635A, P649A, P733S, P741A, P755A, P788S, P792A, U274A, U322A
Facility mission description as related to TRU mixed waste generation and management and as related to radionuclide-bearing materials and their management.	WM2	C039A, C145A, C855A, C945A, P014A, P015A, P016A, P043A, P053A, P161A, P166A, P199A, P200A, P368A, P373A, P393A, P420A, P431A, P432A, P436A, P442A, P443A, P448A, P449A, P452A, P453A, P454A, P455A, P456A, P460A, P461A, P462A, P486A, P487A, P489A, P490A, P491A, P494A, P593A, P594A, P610A, P621A, P632A, P633A, P634A, P635A, P649A, P744A, P752A, P761S, P792A, U016A, U047A
Description of the operations that generate TRU mixed waste at the site, and of the specific site locations and operations relative to the isotopic composition of the TRU wastes they generated.	WM3	C057A, C072A, C110A, C115A, C145A, C154A, C159A, C171A, C175A, C182A, C184A, C188A, C190A, C191A, C198A, C199A, C200A, C204A, C205A, C207A, C289A, C790S, D060A, P008A, P039A, P043A, P052A, P053A, P060A, P061A, P062A, P067A, P077A, P078A, P079A, P081A, P082A, P097A, P103A, P104A, P109A, P1100A, P113A, P1138A, P1175A, P123A, P126A, P1365A, P139A, P161A, P163A, P164A, P167A, P170A, P175A, P178A, P179A, P180A, P181A, P182A, P183A, P184A, P186A, P187A, P189A, P190A, P191A, P192A, P193A, P194A, P195A, P196A, P197A, P198A, P199A, P200A, P201A, P202A, P307A, P319A, P368A, P369A, P373A, P393A, P400A, P402A, P420A, P421A, P422A, P431A, P432A, P435S, P436A, P440A, P442A, P443A, P444A, P448A, P449A, P450A, P451A, P452A, P453A, P454A, P455A, P456A, P460A, P461A, P462A, P486A, P487A, P489A, P490A, P491A, P494A, P495A, P496A, P593A, P594A, P595A, P596A, P599A, P600A, P609A, P610A, P621A, P632A, P633A, P634A, P635A, P649A, P730A, P731A, P740S, P744A, P756A, P758A, P759S, P768A, P792A, P803A, P835A, P847A, U016A, U057A, U060A, U064A, U065A, U066A, U067A, U070A, U119A, U274A, U322A

AK Information	AK#<1>	Source Document Reference Number
Generator Site TRU Waste Management Program (WM) information		
Waste identification or categorization schemes used at the facility including codes that correlate to a specific isotopic distribution and a description of the isotopic composition of each waste stream.	WM4	C006A, C007A, C015A, C018A, C022A, C072A, C077A, C089A, C090A, C103A, C104A, C110A, C114A, C177A, C185A, C186A, C187A, C196A, C197A, C200A, C235A, C311A, C312A, C313A, C334A, C459A, C507A, C546S, C566S, C840S, C841S, D061A, D075A, P014A, P024A, P035A, P038A, P043A, P052A, P058A, P062A, P063A, P064A, P090A, P092A, P104A, P108A, P1100A, P1137A, P1138A, P124A, P125A, P139A, P167A, P214A, P237A, P282A, P304A, P367A, P368A, P370A, P371A, P372A, P393A, P399A, P400A, P402A, P422A, P431A, P432A, P436A, P440A, P442A, P443A, P450A, P451A, P567A, P595A, P599A, P609A, P632A, P633A, P634A, P635A, P649A, P670A, P671S, P717A, P730A, P731A, P759S, P792A, U010A, U011A, U014A, U015A, U059A, U069A, U071A, U096A, U120A, U230A, U235S, U274A
Types and quantities of TRU waste generated, including historical generation through future projections.	WM5	C1023A, C159A, C191A, C312A, C315A, C507A, C535A, C618A, C855A, C876A, P024A, P061A, P090A, P109A, P1100A, P113A, P1138A, P1175A, P1364A, P1365A, P164A, P178A, P179A, P180A, P181A, P182A, P183A, P184A, P186A, P189A, P190A, P191A, P192A, P193A, P194A, P195A, P196A, P197A, P319A, P364A, P365A, P368A, P393A, P400A, P402A, P420A, P422A, P431A, P432A, P461A, P462A, P486A, P487A, P567A, P595A, P596A, P600A, P609A, P610A, P632A, P633A, P634A, P635A, P649A, P652S, P653S, P717A, P730A, P741A, P755A, P758A, P759S, P761S, P763S, P767S, P788S, P792A, P803A, P847A, U120A, U122A, U215A, U235S, U274A
Correlation of waste streams generated from the same building and process, as appropriate.	WM6	C1020S, C182A, C224A, C235A, C293A, C294A, C295A, C296A, C536A, C552S, C877A, D061A, D075A, D077A, P043A, P052A, P053A, P062A, P063A, P064A, P082A, P103A, P109A, P1100A, P1138A, P1364A, P1365A, P214A, P365A, P368A, P369A, P370A, P372A, P373A, P393A, P400A, P402A, P420A, P421A, P422A, P431A, P432A, P435S, P436A, P442A, P443A, P448A, P449A, P452A, P453A, P454A, P455A, P456A, P460A, P461A, P462A, P486A, P487A, P489A, P490A, P491A, P494A, P496A, P567A, P593A, P594A, P595A, P609A, P610A, P632A, P633A, P634A, P635A, P649A, P671S, P730A, P731A, P741A, P758A, P759S, P763S, P792A, P847A, U069A, U274A

Implementing Document: MP-TRUW-8.13

AK Information	AK#<1>	Source Document Reference Number
Generator Site TRU Waste Management Program (WM) information		
Assessment of operations to determine if the TRU waste materials at the generator site meet the definition of defense waste, High-Level waste or Spent Nuclear Fuel as specified in the WIPP WAC.	WM7	C188A, C190A, C191A, C329A, C559S, C945A, P053A, P368A, P400A, P402A, P431A, P432A, P435S, P436A, P442A, P443A, P598A, P609A, P621A, P632A, P633A, P634A, P635A, P649A, P757A, P788S, P792A, U129A, U216S, U274A
Waste certification procedures for retrievably stored and newly generated wastes to be sent to the Waste Isolation Pilot Plant (WIPP) facility.	WM8	C026A, C040A, C210A, C211A, C218A, C220A, C221A, C222A, C274A, C275A, C276A, C315A, P001A, P004A, P014A, P028A, P043A, P210A, P227A, P368A, P396A, P431A, P432A, P436A, P445A, P465A, P632A, P633A, P634A, P635A, P649A, P730A, U274A
<1> The AK#s are to be used in the Acceptable Knowledge Source Document Summary to aid in identifying the location of program and waste stream-specific elements within a given document.		

All required AK information has been compiled and tracking numbers assigned.

AK Expert: TIM VIENNEAU Print/Sign Date: 10-18-11 Date

Site Project Manager: Steve Carpenter Print/Sign Date: 10.19.11

Waste Stream or Waste Type Description: Special Setups

Waste Stream or IDC Number: BN004

AK Information	AK#<1>	Source Document Reference Number
Generator site TRU waste stream (WS) - specific information		
Information identifying the building(s) and/or area (s) from which TRU waste was or is generated.	WS1	C001A, C073A, C184A, C522A, C618A, C822S, C842S, D061A, P001A, P012A, P014A, P016A, P024A, P052A, P067A, P1031A, P127A, P319A, P368A, P435S, P442A, P443A, P494A, P495A, P496A, P608A, P609A, P621A, P649A, P667A, P671S, P717A, P733S, P741A, P744A, P746A, P755A, P759S, P847A, P888A, P953A, U043A, U059A, U069A, U119A, U215A, U223A
Waste stream volume and time period of generation.	WS2	C499A, C507A, C522A, C534A, C535A, C543S, C620A, C842S, C855A, C856A, C861A, C875S, C876A, D032A, D061A, P024A, P090A, P1031A, P127A, P198A, P318A, P319A, P364A, P365A, P368A, P400A, P442A, P443A, P567A, P609A, P621A, P649A, P671S, P743A, P744A, P746A, P755A, P758A, P759S, P826A, P838A, P847A, P888A, U043A, U059A, U069A, U122A, U127A, U215A, U223A, U235S
Waste generating process description for each building, including processes with U134 waste generation, if applicable and process flow diagrams. See instructions if process flow diagrams are not available.	WS3	C008A, C010A, C014A, C175A, P001A, P012A, P014A, P015A, P016A, P024A, P052A, P067A, P070A, P073A, P078A, P107A, P319A, P368A, P435S, P442A, P443A, P494A, P496A, P608A, P609A, P621A, P649A, P667A, P671S, P717A, P743A, P744A, P746A, P758A, P759S, P888A, U043A, U119A
Material inputs or other information identifying chemical content, and event or process that may have modified the chemical properties after generation. Include data for newly generated waste obtained through VE and/or radiography, information demonstrating neutralization of U134 waste and chemical composition that could affect the isotopic distribution.	WS4	C063A, C065A, C085A, C245A, C546S, D061A, D070A, D076A, P016A, P024A, P033A, P052A, P053A, P070A, P091A, P107A, P119A, P164A, P207A, P307A, P310A, P319A, P365A, P368A, P393A, P401A, P409A, P435S, P442A, P443A, P494A, P495A, P496A, P605A, P606A, P607A, P608A, P609A, P621A, P649A, P667A, P717A, P744A, P759S, P808S, P888A, U043A, U054A, U107A, U119A

Implementing Document: MP-TRUW-8.13

AK Information	AK#<1>	Source Document Reference Number
Generator site TRU waste stream (WS) - specific information		
Material inputs or other information identifying physical waste form, and event or process that may have modified the physical properties after generation. Include data obtained through RTR or VE of newly generated waste and physical composition that could affect the isotopic distribution.	WS5	C313A, C315A, C316A, C460A, C499A, C504A, C534A, C546S, C566S, C620A, C840S, C841S, C842S, D061A, P001A, P012A, P014A, P015A, P016A, P021A, P024A, P039A, P043A, P052A, P063A, P064A, P070A, P073A, P090A, P141A, P207A, P319A, P365A, P368A, P372A, P393A, P399A, P435S, P442A, P443A, P465A, P494A, P495A, P496A, P567A, P605A, P606A, P607A, P608A, P609A, P621A, P649A, P667A, P670A, P717A, P741A, P744A, P746A, P755A, P758A, P759S, P838A, P847A, P881S, P888A, U119A, U223A, U230A
EPA hazardous waste constituents in the waste stream and Hazardous Waste Numbers assigned.	WS6	C065A, C079A, C085A, C245A, C313A, C566S, C607A, C840S, C841S, D001A, D011A, D064A, D070A, D076A, D077A, P012A, P013A, P015A, P016A, P052A, P053A, P080A, P207A, P307A, P310A, P365A, P368A, P393A, P435S, P442A, P443A, P494A, P495A, P605A, P606A, P607A, P609A, P649A, P667A, P668S, P717A, P733S, P743A, P744A, P756A, P838A, U046A, U054A, U059A, U060A, U082A, U107A
Specification of the isotopic ratios for the 10 WIPP-tracked radionuclides (241Am, 238PU, 239 Pu, 240 PU, 242Pu, 233U, 234U, 238 U, 90 Sr, and 137Cs) and the radionuclides comprising 95% of the hazard.	WS7	C002A, C130A, C222A, C281A, C285A, C459A, C506A, C551A, C552S, C566S, C840S, C841S, D051A, P024A, P090A, P198A, P227A, P240A, P307A, P322A, P368A, P398A, P435S, P442A, P443A, P494A, P609A, P611A, P621A, P649A, P743A, P744A, P745A, P755A, P759S, P838A, P888A, U043A, U235S
Documentation identifying the presence of prohibited items listed in Section B-1c of the WIPP-WAP.	WS8	C073A, C321A, C511A, C516A, C842S, D070A, P001A, P012A, P013A, P015A, P016A, P021A, P024A, P063A, P358A, P368A, P372A, P399A, P442A, P443A, P465A, P609A, P649A, P667A, P733S, P741A, P744A, P888A, U215A, U223A
<1> The AK#'s are to be used in the Acceptable Knowledge Source Document Summary to aid in the identification of program and waste stream-specific elements within a given document.		

All required AK information has been compiled and tracking numbers assigned.

AK Expert: Nancy Kirk / Nancy Kirk Date: 9/16/10
Print/Sign Date

Site Project Manager: Steve Carpenter Date: 9/16/10
Print/Sign

AMWTP
Advanced Mixed Waste Treatment Project

Waste Matrix Code Reference Manual

Advanced Mixed Waste Treatment Project

(Signature on file. See DCR-13265.)

07/17/14
Date

REVISION LOG

Revision Number	Date Approved	Pages Affected	Description of Revision
0	05/11/03	All	DCR-2250, Initial issue.
1	06/10/04	All	Re-sorting the tables according to IDC rather than Waste Matrix Code. Added in newly documented packaging configuration for RF 001. Included additional detail for MD-834, MD-835, and MD-836. Added BN 512, AE 100, AE 101, AE 102, AE 104, AE 105, AE 106, AE 107, AE 110, AE 111, AE 120, AE 121, BL 081, BL 012, BL 015, BL 030, ID 150, ID 152, ID 153, ID 154, ID 155, ID 156, ID 160, ID 161, ID 162, ID 163, ID 164, ID 157, ID 021, ID 601, ID 175.
2	3/03/05	Page 48	DCR-4021-Replaced waste matrix code S5129 with S3119.
3	07/14/05	Various	DCR-4228. Added Mound IDC 810. Added IDC 812 information to IDCs 801, 802, 803 and 804. Added IDC 832 information to IDCs. Added information regarding packaging for the RF wastes repackaged during the BIN program. Replaced acronym RFP with RF.
4	08/19/05	All	DCR-4463. Added clarification concerning which IDCs can and cannot be shipped to WIPP. Updated and corrected WMCs to reflect information in TRUW-6 and -12.
5	10/11/05	Various	DCR-4558. Revised to add newly approved AK information.
6	10/13/05	25 and 39	DCR-4621. Minor change to correct errors in Rev. 5.
7	1/10/06	3, 48, and 75	DCR-4720. Change the WMC for resins (IDCs RF 432 and RF 822).
8	2/24/06	All	DCR-4786. Added new section to provide additional information concerning expected variations in waste composition and packaging configurations, reformatted tables to add or clarify information (e.g., waste in boxes, WIPP acceptable), incorporated AKRs, added new IDCs, and added information to waste stream descriptions.
9	03/06/2006	All	DCR-4846. Insert Appendix A, correct references, and incorporate revised AKR-05-331.
10	04/05/06	Various	DCR-4872. Revise Sections 3.1.2 and 3.34, incorporate AKRs, and make additional corrections throughout.

Revision Number	Date Approved	Pages Affected	Description of Revision
11	06/13/06	Various	DCR-5007. Revise Section 1.0 to address audit observations concerning the use of the report. Revise Section 4.0 to make corrections throughout, including updating WMC/IDC names to match TWBIR/WTS, deleting newly generated IDCs (ID 000, RF 000, BN 502, BN 503, BN 504, BN 506, BN 512, BN 513, BN 513, BN 514, and RF 9999) that are no longer needed, and adding clarification concerning use of generator area codes in WTS to identify the generator of INL waste instead of the generator site code, ID. For certain IDCs (302, 33A, 33B, 330, 336, 337, 464, 831, 832, and 833), change WMC to S5300 and change the WMC description to "Organic Debris."
12	08/08/06	Various	DCR-5122. Revised to provide clarification, update new information, and make minor corrections to waste matrix codes.
13	09/14/06	Various	DCR-5284. Revised to add/correct information concerning prohibited items (including adding new Section 3.4) for implementation of corrective action identified from CBFO CAR 06-036, TrackWise CAR 23463. Also changed the WMC for IDC RF 374 to S5490 and added information to Special Notes for IDC RF 003 concerning PCB Mass weight.
14	10/26/06	Various	DCR-5421. Revised to add/correct information for IDCs RF 337, RF 338, RF 371, RF 376, RF 480, RF 481, RF 48A, SD 704, SD 705, and SD 706 which included addressing corrective actions identified in NCRs 23821, 23895, and 23932. Added information concerning packaging configurations and prohibited items to Sections 3.3 and 3.4. Added applicable references to Section 5. Add column of WMCs to Appendix A.

Revision Number	Date Approved	Pages Affected	Description of Revision
15	11/30/06	Various	DCR-5511. Added information to effected IDCs concerning when an IDC is not required if the proposed change is to another IDC included in the same approved waste stream. Corrected WMCG designation for metal waste assigned to BN296. Incorporated information from AKR-04-43, AKR-04-75, and AKR-05-358. Changed the WMCs for RF crucibles, grit and other debris waste as documented in AKR-05-239 R1, AKR-06-427, AKR-06-428, and AKR-06-429. Added information to clarify when a WMC change is required for IDCs that contain homogeneous solids, soil/gravel, and/or debris. Revised waste definitions to match WAP. Added information concerning use of generator codes, prohibited items, and PCB waste. Changed "secondary waste" to "other waste" throughout the document. Deleted IDC SD 703.
16	04/03/07	All	DCR-5830. Update descriptions to include atypical waste items identified in AK documents (including historical RTR/VE). Update description for IDCs SD 704, SD 705, and SD 706 to include information from AK Summary report. Update descriptions for RF 371 to clarify cinderblocks acceptable as in primary waste form in individual containers.
17	07/03/07	Various	DCR-6129. Add clarification to Table 3-1 concerning estimation of waste parameters. Add new IDCs UN 000 and UN 00D and revised name and description for IDCs UN 00A, UN 00B, and UN 00C for temporary IDCs. Revise and/or update information for IDCs RF 002, RF 003, RF 007, RF 095, RF 337, RF 338, RF 371, RF 374, RF 376, RF 480, RF 490, BN 501, BN 505, BN 507, BN 508, BN 509, BN 511, BN 526, BN 530, BN 535, BN 603, BN 604, BN 605, RF 696 (RF 807b), BN 201, RF 800, RF 801, RF 802, RF 803, RF 807, MD 834, RF 950, RF 978, RF 990, and RF 995. Add IDCs RL 710, RL 711, RL 712, and RL 713 for Hanford waste. Add IDCs RF 741, RF 742, RF 743, RF 744, RF 745, RF 750, and RF 751 for Rocky Flats waste retrieved from Pits 11 and 12. Add IDCs BN 531, BN 607, BN 608, BN 609, BN 610, BN 611, BN 612, BN 613, BN 614, BN 615, BN 616, BN 617, BN 618, BN 619, BN 620, BN 621, BN 622, BN 623, BN 624, BN 625, BN 626, BN 627, BN 628, BN 629, and BN 630 for LLW and MLLW wastes. Update references to new style guide. Correct format of TRUCON codes in Appendix A. Make editorial changes.

Revision Number	Date Approved	Pages Affected	Description of Revision
18	02/14/08	Various	DCR-6724. Add IDC RF-746. Change WMC for IDCs AE-100, RF-241, RF-960. Provide clarification concerning recommending IDC changes, indeterminate RTR/VE exams, and allowable amounts of other waste forms. Add waste description information (e.g., soils/gravel, absorbents, filters, and other waste forms). Add information concerning liquids found in homogenous solids and cemented solids found in debris waste. Add alternate packaging configurations (e.g., Kraft tubes). Add historical ID information. Add hyphen between generator designator and IDC number to match format used in WTS reports. Change titles in Waste Matrix Code Reference Tables and, as required, revise contents of Tables to only identify waste parameters for primary waste form. Change WMPs from Inorganic Matrix to Other Inorganic Materials for IDCs: ID-005, RF-005, RF-420, RF-421, RF-422, and RF-425.
19	08/19/08	Various	DCR-7429. Add IDCs ID-142, AW-165, AW-167, RF-010, RF-020, RF-030, RF-040, RF-050, RF-060, RF-070, RF-080, RF-747, RF-748, and RF-752. Updated packaging information for newly generated IDCs to reflect applicable procedure(s). Provide clarification concerning handling of empty aerosol containers, available versus not summarized information, and recommended IDC changes.
20	10/30/08	Various	DCR-7661. Correct description for revision 19. Add packaging information for newly generated IDCs. Correct information for IDC RF-748. Change generator area code for analytical waste to reflect waste generator is INTEC (i.e., change IDCs BN-526 and BN-603 to IDCs IC-526 and IC-603 in this report and in WTS). Provide additional information concerning PCBs and packaging configuration for ARP waste. Add information identifying containers that may contain U134 waste. Add information indentifying prohibited items found in MLLW/LLW boxes. Provide clarification to description of HEPA filters. Add section 3.3.5 to address drum filter vents. Provided clarification concerning use of area generator codes in this report and WTS for waste generated at INL facilities. Add special notes for IDCs RF-393, RF-420 and RF-422 concerning IDCs recommendations if waste form is cemented pucks instead of uncemented waste. Add information concerning use of X7000 and S9000 SCGs. General editorial changes.

Revision Number	Date Approved	Pages Affected	Description of Revision
21	05/26/09	ALL	DCR-8239. Periodic review. Add Section 3.3.6. Add new IDCs IW-176 thru IW-179, NT-210 thru NT-220, BN-500, BN-518, BN-519, BN-520, BN-521, BN-631, BN-632, BN-633, BN-634, BN-635, RF-998, and RF-999. Updated information for IDCs IW-005, ID-142 (revised to AW-142), ID-154, ID-157, RF-241, RF-302, RF-336, RF-371, RF-432, RF-481, BN-501, BN-508, BN-510, BN-511, BN-604, BN-618 thru BN-620, BN-622, BN-625 thru BN-627, RF-741 thru RF-752, MD-847, and RF-960. Delete duplicate references and add new references. General editorial changes.
22	07/20/09	Various	DCR-8483. Periodic Review. Add IDCs BN-528, BN-529, BN-536, BN-537, BN-636, and BN-637. Change generator designator from ID to AW for IDCs AW-160 through AW-167. Change generator designator from ID to IC for IDCs IC-156 and IC-601. Revise WMCs for IDCs ID-150, AW-161 and AW-165. Revise WIPP status for IDC AW-164. Revise IDC descriptions for IDCs BN-520, BN-521, BN-634 and BN-635. Update information concerning prohibited items (based on RTR results). Update information in Reference Section. Update TRUCON code table in Appendix A. General editorial changes.
23	12/03/09	Various	DCR-8852. Add new IDCs BN-513, BN-514, BN-515, BN-522, IC-527, BN-538, RF-749, RF-753, and RF-754. Revise names of IDCs RF-095, RF-337, BN-501, BN-507, BN-509, BN-511, IC-526, IC-603, and RF-995. Update information concerning PCB and non-PCB wastes (including designating BN-501, BN-511, IC-526 and IC-603 as PCB wastes). Update special notes for UN IDCs and IDCs associated with leaded gloves. Change WMCs for RF-095, BN-603, and RF-995. Update information concerning roaster oxide and 30-gallon drums that may be present in waste retrieved from Pits 11 and 12. Add new references including CCP AK Summaries for NTS wastes. General editorial changes.

Revision Number	Date Approved	Pages Affected	Description of Revision
24	06/16/10	Various	DCR-9294. Update list of generators in Section 2. Update information in Section 2 to reflect WIPP permit modification and generator information for RL and MFC. Add new IDCs PC-000, LL-212, LL-213, LL-221, GV-222, IW-526, IW-527, BN-550, IW-603, BN-702, RL-714, RL-716, and RF-760. Delete IDCs AW-142, RL-710, RL-711 and RL-713.Create new tables for IDCs AW-150 and IC-150. Revise the IDC names and descriptions for IDCs AW-160, AW-164, AW-165, AW-167, RF-374, BN-520, BN-521, BN-634, BN-635, and RL-712. Add NTS to names of IDCs NT-211, NT-212, and NT-213. Update IDC descriptions, packaging configurations, and special notes for AE, AW, BC and BL IDCs. Add SWB configuration for S3000 waste in approved profiles. Update special notes for waste received under the Offsite Waste procedures. Correct date for use of rigid liner at RF. Update acronym and abbreviations. Update information in Reference Section. Add BN222 to Appendix A. General editorial changes.
25	12/09/10	Various	DCR 9668. Revised special notes for IDCs UN-00A, UN-00B, UN-00C, and UN-00D. Revised names and descriptions of IDCs BN-500, BN-528, BN-529, and BN-537 to specify waste included in these IDCs. Revised description of IDCs BN-508, BN-509, BN-520, BN-521, BN-536, BN-604, BN-605, BN-607 through BN-617, BN-634, and BN-635 to specify wastes included in these IDCs. Added new IDC BN-534. Updated description of organic setups (IDCs RF-003, BN-511, and RF-743) to reflect solidified liquid. Updated description and special notes for IDC AE-100 to incorporate results of RTR examination. Updated description for IDC RF-337 to identify additional items that may be present in the waste. Updated special notes for IDCs RF-370 and RL-712 to incorporate results of RTR examinations. Revised "confirm" to verify" and added clarification concerning prohibited liquids throughout document to be consistent with WIPP WAP. Added Aquaset II-G® throughout document. Updated list of acronyms, references and Appendix A. General editorial changes.

Revision Number	Date Approved	Pages Affected	Description of Revision
26	04/26/11	Various	DCR-10057. Revised Section 3 to identify RF and MD concerning variations in waste composition, absorbents, and packaging configurations. Added IDCs LA-002, LA-003, LA-005, LA-006, SL-223, SL-224, AW-225, SL-227, OR-250, SR-251, SR-252, SR-253, AE-254, SD-703, RL-715, RL-720, and SR-835. Revised Sections 3 and 4 to add abbreviated IDC table format for waste received under the AMWTP Offsite Waste Program and profiled by CCP. Added Section 3.5.7. Revised IDC tables for wastes from AW, NT, LL, GV, IC, SD, and RL generators to abbreviated format. Added IDCs IC-525 and IW-602 to segregate assigned P and U listed HWNs. Added IDCs BN-539 and BN-600. Revised waste descriptions and special notes for IDCs BN-500, BN-505, BN-507, BN-508, BN-509, BN-511, BN-513, BN-514, BN-515, BN-520, BN-521 BN-528, BN-529, BN-534, BN-604, and BN-605. Added clarification that "bulk" is "direct loaded" drums. Updated lists of acronyms, generator sites, and references. General editorial changes.
27	06/08/11	Various	DCR-10144. Added IDCs BN-523, BN-524, BN-525, BN-526, BN-527, BN-597, BN-598, BN-599, BN-602, and BN-603. Added offsite waste IDCs ND-228, LB-229, and SR-842. Revised name for IDC RF-760. Revised descriptions and/or special notes for IDCs RF-336, BN-500, BN-505, BN-508, BN-509, BN-511, BN-513, BN-515, BN-600, BN-604, BN-605, and RF-760. Updated lists of acronyms, generator sites, and references. General editorial changes and corrections.
28	09/01/11	Various	DCR-10322. Added Section 3.1.1.1 and clarified scope of Section 3.3.1. Updated and corrected information in Table 3.1. Added offsite waste IDC AE-230. Deleted WMCs and updated Special Notes for IDCs IW-005, IW-179, BN-519, RF-998, and RF-999 to reflect IDCs for overpack container configuration. Updated Special Notes for IW-176, IW-177, and IW-178 to include bin configuration. Revised information for IDCs AE-100, AE-101, AE-104, RF-004, BN-500, BN-508, BN-523, BN-524, BN-600, RF-751, and RF-760. Updated Special Notes to add prohibited items identified by RTR or VE examinations based on WTS query performed on 6/30/2011. Added TRUCON codes for waste stream BN600 in Appendix A. Updated list of references. General editorial changes and corrections.

Revision Number	Date Approved	Pages Affected	Description of Revision
29	02/08/12	Various	DCR-10551. Corrected approval date of revision 28 in Revision Log. Modified UN-00A to clarify waste description, primary waste parameters, and special notes. Modified RF-004 to clarify Special Notes. Modified AE-100, AE-101, AE-102, AE-104, AE-105, AE-106, AE-107, AE-110, AE-111, AE-120, and AE-121 to reflect newly available AK. Changed name of AE-230. Add IDC SR-255. Removed RF-374a/697 and replaced it as RF-697. Add IDC BN-541. Modified BN-632 to clarify special notes. Modified BN-633 to clarify special notes. Removed RF-807b and replaced it as RF-696. Modified RF-751 to clarify special notes. Modified RF-760 to clarify waste description and special notes. Modified RF-802 to clarify special notes. Added references 248 – 263.
30	09/26/12	Various	DCR-11109. Updated Secs. 1.0, 2.0, 3.0, 3.2, 3.3.2, 3.5.6, and added section 3.5.7. Updated Waste Matrix Reference Tables for PC-000, UN-000, UN-00A, UN-00B, UN-00C, UN-00D, RF-003, RF-090, RF-095, AE-100, AE-101, AE-102, AE-104, AE-105, AE-106, AE-107, AE-110, AE-111, AE-120, AE-121, AW-150, ID-153, ID-154, ID-155, AW-160, AW-161, AW-162, AW-163, AW-164, AW-165, IW-179, BC-201, BC-202, BC-203, RF-241, BN-500, BN-501, BN-505, BN-508, BN-509, BN-510, BN-511, BN-513, BN-519, BN-520, BN-521, BN-528, BN-529, BN-534, BN-541, BN-598, BN-604, BN-633, RF-750, RF-752, RF-760, RF-807, MD-811, and RF-995. Deleted Waste Matrix Reference Tables for IW-176, IW-177, IW-178, RF-752, RF-754, and RF-748. Added Waste Matrix Reference Tables for SD-176, SD-177, SD-178, LA-250, SR-255, SR-256, SR-257, SR-258, SR-259, SR-260, SR-261, and CW-600. Added references 265 – 272. Deleted Appendix A.
31	01/31/13	Various	DCR-11950. Updated Acronyms and Abbreviations. Updated Waste Matrix Reference Tables for RF-003, AE-100, AE-101, AE-102, AE-104, AE-105, AE-106, AE-107, AE-110, AE-111, AE-120, AE-121, SD-176, SD-177, SD-178, IW-179, RF-480, BN-500, BN-501, BN-505, BN-509, BN-511, BN-513, BN-515, BN-519, BN-520, BN-521, BN-522, BN-531, BN-534, BN-535, BN-541, CW-600, BN-605, BN-633, RF-998, and RF-999. Added new Waste Matrix Reference Tables for SD-179, BN-180, and BN-540. Revised reference 248.

Revision Number	Date Approved	Pages Affected	Description of Revision
32	07/16/13	Various	DCR-12476. Add IDCs LA-004, LA-007, LA-008, LA-009, LA-010, and BN-516. Multiple editorial changes.
33	10/29/13	Various	DCR-12708. Updated Waste Matrix Reference Tables for LA-007, LA-008, LA-009, BL-010, LA-010, BL-012, BL-015, BL-020, ID-021, BL-030, BL-040, BL-050, BL-081, AE-100, ID-150, ID-152, ID-153, ID-154, ID-155, ID-156, ID-157, AW-167, ID-175, SD-179, BN-180, ID-337, BN-500, BN-508, BN-516, BN-518, IC-526, IW-526, IC-527, IW-527, BN-540, BN-550, IC-601, IC-603, IW-603, RF-741, RF-742, RF-743, RF-744, RF-745, RF-746, RF-747, RF-749, RF-750, RF-751, RF-753, MD-842, MD-848, RF-998, and RF-999. Added Waste Matrix Reference Tables for IF-150 and IR-603. Removed tables for IC-150, IC-151, IC-525, and IC-602. Updated references. Made multiple editorial changes.
34	03/18/14	Various	DCR-13026. Extensively revised Sections 1, 2, and 3 to clarify and remove redundancy with Section 4. Updated Waste Matrix Reference Tables for UN-00B, RF-003, IW-005, LA-007, LA-009, LA-010, AE-100, AE-102, AE-105, ID-152, IC-156, SD-176, SD-177, SD-178, RF-371, RF-374, BN-500, BN-505, BN-508, BN-513, BN-516, BN-520, BN-521, BN-522, BN-523, BN-538, BN-540, BN-550, BN-600, BN-702, RF-751, and RF-760. Added Tables for IC-150, IC-152, IN-152, IT-152, IR-154, IW-155, IA-157, IC-157, IF-157, IR-157, IT-157, IW-157, CW-216, IC-604, BN-638, and BN-770. Changed IDC descriptions for IC-156 and RF-760. Updated References. Multiple minor editorial changes.
35	03/19/14	Rev. Log	DCR-13264. Corrected the approval date previously entered in the Revision Log (Revision 34) from "3/14/18" to "03/18/14."

Revision Number	Date Approved	Pages Affected	Description of Revision
36	07/17/14	Various	DCR-13265. Updated Sections 1–3. Added Waste Matrix Reference Tables for new IDCs NONE, IC-151, BN-517, IC-605, IC-606, IC-607, BN-639, and BN-640. Added Waste Matrix Reference Tables for expired IDCs ID-000, RF-000, IC-525, IC-602, and RF-752. Changed IDC description for BN-180, IC-604, RF-747, and BN-770. Updated Waste Matrix Reference Table for PC-000, UN-00A, UN-00B, UN-00C, UN-00D, LA-007, LA-008, LA-009, LA-010, BL-012, BL-015, BL-020, BL-040, RF-090, AE-100, AE-102, AE-104, AE-105, AE-110, AE-111, AE-121, AW-150, ID-150, IC-152, IN-152, SD-176, SD-177, SD-178, BN-180, CW-216, RF-371, RF-374, RF-432, BN-500, BN-505, BN-507, BN-508, BN-511, BN-513, BN-516, BN-518, BN-519, BN-520, BN-521, BN-522, BN-523, BN-524, BN-528, BN-529, BN-536, BN-538, BN-539, BN-540, BN-600, CW-600, IC-601, ID-021, IW-005, BN-604, IC-604, RF-003, RF-005, RF-741, RF-742, RF-743, RF-744, RF-745, RF-746, RF-747, RF-749, RF-750, RF-751, RF-753, RF-760, BN-770, and RF-990. Updated references. Minor editorial changes.

CONTENTS

ACRONYMS AND ABBREVIATIONS xiii

1.0 PURPOSE/SCOPE 1

2.0 GENERATOR SITE AND AREA CODES 3

3.0 GUIDANCE CONCERNING USE OF THIS MANUAL 4

3.1 Expected Variations in Waste Composition 4

3.2 Classification of Absorbents 5

3.3 Waste Packaging Configuration Variations 6

3.4 Container Types 7

3.5 Prohibited Items 8

4.0 WASTE MATRIX CODE REFERENCE TABLES 12

5.0 REFERENCES 205

6.0 RECORDS 222

ACRONYMS AND ABBREVIATIONS

NOTE: *The two-letter abbreviations for generator sites and areas are listed in Section 2.0.*

ACL	Analytical Chemistry Laboratory (former name for MFC Analytical Laboratory)
AK	Acceptable Knowledge
AKE	acceptable knowledge expert
AKR	Acceptable Knowledge Resolution
AL	Analytical Lab (at MFC)
AMWTF	Advanced Mixed Waste Treatment Facility
AMWTP	Advanced Mixed Waste Treatment Project
ANL-E	Argonne National Laboratory-East
ANL-W	Argonne National Laboratory-West
ARA	Auxiliary Reactor Area
ARP	Accelerated Retrieval Project
ATR	Advanced Test Reactor Complex (see TRA)
BAPL	Bettis Atomic Power Laboratory
CBFO	Carlsbad Field Office
CL	Casting Laboratory (at MFC)
CCP	Central Characterization Project
CFA	Central Facilities Area
CFR	Code of Federal Regulations
CMB	corrugated metal box
CPP	Chemical Processing Plant
CWI	CH2M-WG Idaho, LLC
D&D	decontamination and decommissioning
DOE	Department of Energy
DRCT	Dry Rod Consolidation Technology
DRF	Drum Repackaging Facility
DTF	Drum Treatment Facility
DU	depleted uranium
DWPG	Drum Waste Packaging Glovebox
EFL	Experimental Fuels Laboratory (at MFC)
EMOP	eight-drum metal overpack pallet
EWR	Early Waste Retrieval project
FMF	Fuel Manufacturing Facility
FRP	fiberglass reinforced plywood (a.k.a. fiberglass reinforced polyester)
GE	General Electric
GGE	Gas Generation Experiments
HEPA	high efficiency particulate air
HFEF	Hot Fuel Examination Facility
HRA	Hot Repair Area
HWN	Hazardous Waste Number

ICP	Idaho Cleanup Project
IDC	item description code
IDR	Initial Drum Retrieval
INEEL	Idaho National Engineering and Environmental Laboratory
INL	Idaho National Laboratory
INTEC	Idaho Nuclear Technology and Engineering Center (formerly called CPP)
ITRI	Inhalation Toxicology Research Institute
IWTS	Integrated Waste Tracking System
LANL	Los Alamos National Laboratory
LBNL	Lawrence Berkeley National Laboratory
LDR	land disposal restriction
LLNL	Lawrence Livermore National Laboratory
LLW	low-level waste
LRC	Lynchburg Research Center
MFC	Materials and Fuels Complex
MLLW	mixed low-level waste
NCR	Nonconformance Report
NDA	nondestructive assay
NMAC	New Mexico Administrative Code
NRD	Nuclear Radiation Development LLC
NRF	Naval Reactor Facility
NRTS	National Reactor Testing Station
NTS	Nevada Test Site
OASIS	Organic and Sludge Immobilization System
ORNL	Oak Ridge National Laboratory
PBF	Power Burst Facility
PCB	polychlorinated biphenyl
PFP	Plutonium Finishing Plant
PK	process knowledge
Poly	polyethylene
PPE	personal protective clothing
PVC	polyvinyl chloride
RBDA	Risk Based Disposal Authorization
RCRA	Resource Conservation and Recovery Act
RFETS	Rocky Flats Environmental Technology Site (formally known as RFP)
RFP	Rocky Flats Plant
RH	remote handled
RWMC	Radioactive Waste Management Complex
RTR	real-time radiography
RTV	room-temperature vulcanizing
SAND	Box designed by Sandia Laboratory in Albuquerque, NM
S/C	Supercompaction
SCW	special-case waste
SCG	Summary Category Group

SDA	Subsurface Disposal Area
SDOP	six-drum overpack
SMOP	six-drum metal overpack pallet
SNL	Sandia National Laboratory
SRS	Savannah River Site
SS&C	sand, slag, and crucible
SWB	standard waste box
SWEPP	Solid Waste Examination Pilot Plant
TAN	Test Area North
TID	tamper indicating device
TRA	Test Reactor Area (see ATR)
TRAMPAC	TRU Waste Authorized Methods for Payload Control
TRU	transuranic
TSA-RE	Transuranic Storage Area-Retrievable Enclosure
TWBIR	Transuranic Waste Baseline Inventory Report
VE	visual examination
VNC	Vallecitos Nuclear Center
WAP	Waste Analysis Plan
WCA	Waste Characterization Area
WETP	WIPP Experimental Test Program
WIPP	Waste Isolation Pilot Plant
WMC	Waste Matrix Code
WMCG	Waste Matrix Code Group
WMP	Waste Management Profile
WMP	waste material parameter
WS	Waste Services
WSPF	Waste Stream Profile Form
WTS	Waste Tracking System

1.0 PURPOSE/SCOPE

This report is a reference manual that provides waste generation information, waste packaging configurations, and physical waste form descriptions (including waste material parameters [WMPs]), for real-time radiography/visual examination (RTR/VE) operators and validators. This information is provided to ensure proper assignment of Summary Category Group (SCG) and Waste Matrix Codes (WMCs) following best management practices at the operations level. SCGs and WMCs are verified by the operators during RTR and VE in support of TRU Programs characterization activities in accordance with MP-TRUW-8.2, Quality Assurance Project Plan. [85] The RTR and VE data collected during verification of SCGs and WMCs may also be used by the low-level waste/mixed low-level waste (LLW/MLLW) Programs or the Offsite Waste Program. This report also includes waste form information for newly-generated item description codes (IDCs), including IDCs used by the LLW/MLLW Program.

For containers eligible for shipment to Waste Isolation Pilot Plant (WIPP), operators will examine container contents and packaging characteristics to: 1) verify that the physical form matches the waste stream description and the WMC (and IDC as appropriate), 2) estimate each of the waste material parameter weights based on these observations, and 3) identify any WIPP prohibited materials.

The terms Summary Category Group, Waste Matrix Code Groups, and Waste Matrix Code are used throughout the WIPP Waste Analysis Plan (WIPP-WAP) and pertain to a collection of descriptive titles, definitions, and associated numerical codes used to classify mixed waste at Department of Energy (DOE) facilities. The SCGs, which identify the physical form, consist of three broad categories: Homogeneous Solids (S3000), Soil/Gravel (S4000), and Debris Waste (S5000). The Waste Matrix Code Groups (WMCGs) include 11 waste stream groupings related to the physical and chemical properties of the waste. The WMCs, which are subcategories of the three SCGs and the 11 WMCGs, address the bulk physical/chemical form (i.e., matrix) of the waste.

The WMCGs are identified in the WIPP-WAP and include the following 11 groups: solidified inorganics, solidified organics, salt waste, soils, lead/cadmium metal, inorganic non-metal waste, combustible waste, graphite, filters, heterogeneous debris waste, and uncategorized metal. WMCs (a.k.a., matrix parameters) are defined in DOE/LLW-217, DOE Waste Treatability Group Guidance. [275]

If a container of waste does not include at least 50% by volume of any given SCG, the SCG constituting the greatest volume of waste will be used to describe the waste. SCGs have been assigned to the waste based on acceptable knowledge (AK) and the following WIPP criteria:

- S3000 homogeneous solids include waste that is at least 50% by volume solid materials, excluding soil, that do not meet the WIPP criteria for classification as debris. Examples include inorganic process residues (e.g., incinerator ash, digestion heels, absorbed liquids, solidified liquids), inorganic sludges, organic sludges, salt waste (e.g., evaporation), and pyrochemical salt waste.

- S4000 soil/gravel includes waste that is at least 50% by volume soil/gravel (natural geologic material $\leq$2.36 inches [60 millimeters]).

- S5000 debris waste includes heterogeneous waste that is at least 50% by volume materials that meet the criteria specified in 20.4.1.800 New Mexico Administrative Code (NMAC). Debris is defined as solid material exceeding 2.36 inch (60 millimeter) particle size that is:
  - A manufactured object
  - Plant or animal matter
  - Natural geologic material.

According to the WIPP-WAP, particles smaller than 2.36 inches (60 millimeters) in size may be considered debris if the debris is a manufactured object(s) and if it is not a particle(s) of S3000 or S4000 material.

NOTE: *X7000/X7211/X7900 (Special Waste) and S9000 (Unknown/Other Solids) may be temporarily assigned as SCGs to waste where additional AK and/or RTR/VE data is required before a final WMC can be assigned (e.g., AE-106, AE-107, BL-012, BL-015, BL-040, BL-081, BL-338, MD-815, RF-080, RF-980, PC-000, and UN-000).*

Summary Category Groups, WMCGs, and WMCs have been assigned to transuranic (TRU) IDCs listed in this report based upon the assigned IDC. This includes potential TRU or potential WIPP candidate IDCs. Low-Level Waste and MLLW program IDCs are excluded from this assignment. Additional AK information (including waste description, packaging configuration, drum preparation, waste parameters, and special notes) is obtained from a comprehensive AK database and may be augmented by data collected during RTR/VE examinations.

AK information is routinely developed, documented, and added to the official AK record. This document will be revised to reflect additional AK information that may be used to assign SCG/WMC/IDC(s), update waste descriptions or packaging, and/or to provide additional information into special notes.

2.0 GENERATOR SITE AND AREA CODES

The following two-letter codes are used to identify the generator site and generator area for the waste stored at the Idaho National Laboratory (INL). For this report, the two-letter site code is used to identify the generator of a waste except for certain INL area generators as identified below. In the Waste Tracking System (WTS) either the site code or area code is used for the INL area generators. UN is used as a temporary IDC designator that reflects a waste with an "undetermined" form or an "undefined" IDC during characterization activities.

Site Code	Area Code	Description
AE	–	Argonne National Laboratory-East (ANL-E)
BC	–	Battelle Columbus Laboratory
BL	–	Bettis Atomic Power Laboratory (BAPL)
BW	–	Babcock and Wilcox
BX	–	Bendix-Grand Junction Operation Office
CW	–	CH2M-WG Idaho
GV	–	General Electric Vallecitos Nuclear Center (VNC)
ID	AW	INL Materials and Fuels Complex (formerly called ANL-West [ANL-W])
ID	BN	INL Advanced Mixed Waste Treatment Project (formerly called BNFL)
ID[a]	IA	INL Auxiliary Reactor Area (ARA)
ID[a]	IC	INL Idaho Nuclear Technology and Engineering Center (INTEC), formerly called Chemical Processing Plant (CPP)
ID[a]	IF	INL Central Facilities Area (CFA)
ID[a]	IN	INL Naval Reactor Facility (NRF)
ID[a]	IP	INL Critical Infrastructure Test Range Complex (formerly called INL Power Burst Facility [PBF])
ID[a]	IR	INL Advanced Test Reactor (ATR) Complex (formerly called Test Reactor Area [TRA])
ID[a]	IT	INL Test Area North (TAN)
ID[a]	IW	INL Radioactive Waste Management Complex (RWMC)
ID	SD	INL Subsurface Disposal Area (SDA)
JH	–	J. C. Haynes, Ohio businessman who irradiated diamonds with ^{241}Am
LA	–	Los Alamos National Laboratory (LANL)
LB	–	Lawrence Berkeley National Laboratory (LBNL)
LL	–	Lawrence Livermore National Laboratory (LLNL)
MD	–	Mound Laboratory
MO	–	Monsanto-Dayton Laboratory
MX	–	Americium-241 waste from a smoke detector manufacturing company in Mexico
ND	–	Nuclear Radiation Development, LLC (NRD)
NT	–	Nevada Test Site (NTS)
OR	–	Oak Ridge National Laboratory (ORNL)
RF	–	Rocky Flats Plant (RFP) (subsequently known as Rocky Flats Environmental Technology Site [RFETS])
RL	–	Hanford Site (Richland, Washington)
SL	–	Sandia National Laboratories (SNL)
SR	–	Savannah River Site (SRS)

a. The two-character site code "ID" is used in this report to summarize a group of subsidiary area codes with the same characteristics. Either the site code "ID" or the area codes "IA, IC, IF, IN, IP, IR, IT, or IW" may be used in WTS to identify these INL area generators.

3.0 GUIDANCE CONCERNING USE OF THIS MANUAL

Table 3.1, Explanation of Reference Table Content, provides a detailed template of the information found in Section 4.0 by IDC. References that augment the AK reports or that are specific to individual IDCs, waste generators, or waste streams are identified by superscripts within this document. [4, 5, 50, 54, 180, 181] The information for newly-generated LLW/MLLW IDCs, may only identify the IDC assignment. The IDC descriptions for LLW and MLLW are obtained through Waste Services (WS) or offsite waste personnel. Newly-generated LLW and MLLW information is updated at the request of WS or the MLLW program. Abbreviated tables are provided for IDCs associated with waste received under the Advanced Mixed Waste Treatment Project (AMWTP) Offsite Waste Program that will be characterized and profiled by Central Characterization Project (CCP). The waste stream description, composition, packaging, and prohibited items information for these wastes are available from the AMWTP offsite waste coordinator.

In addition to identifying the SCG, WMC, and WMCG for TRU IDCs, the WMC reference tables in Section 4.0 provide other information associated with each IDC. These tables provide a description of the waste that identifies the expected primary waste form(s), as well as the other waste forms (including absorbent) that may be associated with assigned IDCs. These tables also include a description of the packaging configurations (including applicable inner containers), identification of the expected waste parameters for the primary waste form(s), special notes that provide other pertinent information (e.g., potential prohibited items, recommended IDC changes, variations within the waste, or historical ID configuration). Fields within Table 3.1 are updated as applicable AK information or RTR/VE results are received by AK.

General information associated with individual generators that is not specific to any given IDC is described in Section 3.1 and includes:

- Other waste types that may be found in individual containers of a specific IDC
- Absorbents that may or may not be present.
- Container packaging variations (e.g., type/number of packaging layers, use of plywood spacers, and identification of 30-gallon drums).

Variations identified by AK and/or by characterization activities (e.g., RTR or VE) that are specific to an IDC are incorporated into the tables found in Section 4.0 upon receipt (or development) of applicable AK.

The WMC reference tables in Section 4.0 are arranged in order by the IDC number first and generator second.

3.1 Expected Variations in Waste Composition

Waste packages may contain waste forms other than the waste form associated with the IDC assigned to the container. Two examinations (RTR and intrusive VE) of containers have verified the occurrence of this condition. The other waste forms may include, but are not limited to, the following: [24]

- Combustibles (paper, cardboard, rags, cloth towels, booties, gloves, etc.)
- Plastic (bottles, tubing, bags, sheeting, etc.)
- Wood (filter frames, handles, etc.)
- Rubber (gloves, gaskets, hose, etc.)

- Glass (bottles, vials, Raschig rings, beakers, etc.)
- Lead (glass, tape, gloves, scrap, aprons, etc.)
- Metal (nuts, bolts, nails, cans, welding rods, tools, wire, scrap, etc.)
- Other debris (filters, concrete, light bulbs, D-cell batteries, lead cell batteries, etc.).

The presence of these other waste forms does not impact the IDC assignment unless the amount of these other waste forms exceeds 50% of the container's contents.

NOTE: *An IDC change is not required if the proposed IDC change is to another IDC within the same direct ship Waste Stream Profile Form (WSPF) because there is no change in the WMC (see special notes for affected IDCs).*

3.1.1 MD Waste

Waste management protocol at MD did not require that all waste placed in a container have the same IDC. For example, a drum labeled as IDC MD-803 (Metal Equipment, Pipe, Valves) contains cartons/cans of metal wastes but may also contain cartons/cans of other non-combustible wastes, such as asbestos filters, glass, spun-glass/fiberglass filters, sludge, and mercury. [32, 33, 34, 35] RTR examination of containers of MD debris waste has also verified that the MD debris waste is not well segregated by IDC/waste form and that combustible and non-combustible waste may be found in the same container. [30]

Due to the lack of segregation by IDC/waste form at the drum level, the MD debris waste was assigned the WMC S5490, Unknown/Other Heterogeneous Debris. [18] A single WSPF was developed and approved for MD debris waste. This WSPF (designated BN304) includes IDCs MD-801, MD-802, MD-803, MD-804, MD-805, MD-810, MD-813, MD-814, MD-825, MD-827, and MD-848. Therefore, an IDC change is not required if the proposed change is to another IDC within waste stream BN304. Waste stream BN304 is inactive and the IDCs in BN304 are included in the supercompacted waste stream (BN510 and revisions).

IDC MD-847 bulk (direct loaded) combustible waste is not included in the MD debris WSPF BN304. If a container with one of the IDCs listed for the BN304 waste stream contains greater than 50% (by volume) bulk or direct loaded combustible debris that is not packaged in cans or cartons, the IDC must be changed to MD-847.

3.2 Classification of Absorbents

The presence (or absence) of absorbent in a container does not necessarily impact the characterization (IDC/WMC assignment). If the absorbent (i.e., S3000) is greater than 50% by volume of the waste in debris waste containers (i.e., S5000 SCG), RTR recommends an IDC change, and an AK evaluation will be performed. Based on current AK information, the types of absorbent identified in this document do not impact the characterization. [31, 36]

3.3 Waste Packaging Configuration Variations

The packaging configurations documented in Section 4.0 reflect the expected packaging configurations identified in AK source documents and/or RTR/VE results. Individual containers may have packaging configurations that differ from those reported for the IDC identified in Section 4.0. [23, 26, 28, 29, 43, 56, 62, 102, 103, 104, 105, 106, 107, 108, 109, 110, 111, 112, 113, 114, 115]

Common variations in packaging configuration identified by AK and RTR/VE reports do not require an AK evaluation unless otherwise noted. The variation in expected packaging configuration between bulk or direct loaded S3000 homogeneous solids waste (e.g., waste placed directly into drum rigid liner or drum bag liner) versus S3000 homogeneous solids waste packaged in small inner containers or bags requires an AK evaluation unless the variation is already identified for the IDC in Section 4.0. An AK evaluation may be requested for a packaging configuration not identified in this document.

3.3.1 Bulk versus Inner Container Packaging for S3000 Wastes

Some S3000 homogeneous solids waste is packaged in small containers (e.g., poly bottles, cans, or small plastic bags). Examples of generators that could contain these homogeneous solids waste packaged in small containers include RF, AE, AW, BC, ID, SD, and BL. For some drums assigned S3000 IDCs, the volume of packaging (e.g., cans, poly bottles, small plastic bags, clamshells) exceeds the volume of homogeneous solids waste. If the quantity of debris by volume (including inner packaging) exceeds the volume of S3000 waste, an AK evaluation is requested by the RTR operator/VE by recommending an IDC change. For some S5000 assigned IDCs, the S3000 volume exceeds the debris volume excluding the S3000 packaging. If the quantity of homogenous solids by volume (excluding inner packaging) exceeds the volume of debris waste, an AK evaluation is requested by the RTR operator/VE by recommending an IDC change. The acceptable knowledge expert (AKE) will determine if an IDC change is required or if the original IDC assigned to identify homogeneous solids should be retained.

3.3.2 MD Plywood Spacers

Plywood spacer(s) from ¼- to ¾-inch thick were placed between the rigid liner lid and the drum lid before the drum lid was installed on drums containing IDCs MD-801, MD-802, MD-803, MD-804, MD-810, MD-811, MD-813, MD-814, MD-825, MD-827, MD-834, MD-835, MD-836, MD-847, and MD-848. Melamine (masonite) spacers have also been found in MD drums. The absence or presence of plywood spacers in any drum of waste from MD does not impact the assignment of IDC, WMC, or HWNs, and the characterization and acceptability of the drums are not impacted by this variation of packaging configuration. [3, 25]

NOTE: *The other waste characteristics (e.g., assay results, waste contents consistent with IDC) should be evaluated to ensure that the waste generator designation is correct for those MD containers without plywood spacers.*

3.4 Container Types

The following information assists in determining the generator based on the typical container types for the generator sites. However, other container types may have been used.

3.4.1 RF Container Types

RF 55-gallon drum chines (a.k.a., chimes) are larger and more distinct than the chines on MD drums.

RF used a variety of boxes during the period that RF shipped waste to INL. Prior to 1982, RF used fiberglass reinforced plywood (FRP) boxes. Most RF FRP boxes have interior flush (ribbed on the outside) but some RF FRP boxes have exterior flush (smooth on the outside). RF FRP boxes typically have four evenly spaced skids (runners or manufactured cribbing), but some RF boxes may have five skids. Beginning in 1982, RF also packaged waste in SAND (box designed by Sandia Laboratory in Albuquerque, New Mexico) boxes. The SAND boxes are made of corrugated steel with or without additional support. [75, 101]

NOTE: *One or more skids may be missing from some boxes, but evidence of spacing may still be visible on the bottom of the box.*

3.4.2 MD Container Types

MD 55-gallon drums are taller than RF drums and the chines on MD drums are smaller and more rolled than the chines on RF drums. MD drums also have the year of manufacture on the bottom of the drum (e.g., '79'). MD drums are sealed with a padlock-type yellow tamper indicating device (TID) with Mound stamped on one side and the TID seal number stamped on the other side. [16, 101]

MD used FRP boxes typically with exterior flush (smooth on the outside), five evenly spaced skids (runners or manufactured cribbing), and a yellow-painted horizontal stripe; however, some boxes may have interior flush (ribbed on the outside) and the number of skids may vary from five. Mound boxes also have a metal plaque with a serial number that is a portion of the historical ID. [101]

NOTE: *Some RF FRP boxes also may have exterior flush and five skids, so validation of MD boxes requires at least one other attribute (e.g., yellow-painted stripe and metal plaque) to determine generator. Only Mound painted a yellow stripe on FRP boxes.*

3.4.3 SD Container Types

Bins originally from the SDA generally have the following exterior characteristics. Not all of the bins will have every characteristic; however, waste bins from another generator will not have these characteristics.

The bins originally from the SDA have a container type – 007 or F (MIII/MIV bin – approximately 50 in. × 58 in. × 72 in.) and were deposited in the Transuranic Storage Area-Retrievable Enclosure (TSA-RE) Pad R Cells 1 or 3 only. The bins are painted white and are 30% to 70% covered in rust. The box lid that fits over the box bottom is approximately 1.5 in. wide. Two lift hooks each are on opposite sides of the top of the bin. Affixed to one of the lift hooks will be a blue National Reactor Testing Station (NRTS) TID that has historical information (e.g., month and year of packaging, historical ID, SDA pit, etc.) These, however, may be missing. On the opposite sides of the lift hooks, the phrase "406405-1 ASSY" is stenciled in black on the top right side of the bin. More black stenciled data may follow that stencil (e.g. s/n 336, S/N 385, etc.). Frequently a 4 or 5 digit number that starts with 22 (2242, 2214, 22248, 22196, 22249, etc.), scribed in black marker will be hand written somewhere on the top half of the bin. These numbers can be found on the blue NRTS TID. Infrequently, spot contamination is denoted in black marker with an X in a circle on the bin.

3.4.4 AE Container Types

AE bins generally have the following exterior characteristics. Not all AE bins will have every characteristic; however, waste bins from another generator will not have these characteristics.

The MIII/MIV bins are painted white, with a green triangle at the top right corner, which denotes debris waste. The predominately solid or soil bins are painted red or green. Notably, the debris waste will not be in a red or green bin. These containers are generally in fairly good condition, but many have the lift hook tops cut off. The container historical ID may be stenciled in black on the top left of the bin, in one of the following formats: P • 001 or P06. AE bins do not have the stenciled assembly information or the blue NRTS TID observed in SD bins.

3.5 Prohibited Items

Prohibited items are identified in Section 4.0 (Description or Special Notes) as described in AK source documents or detected during RTR or VE activities. However, prohibited items other than those identified in Section 4.0 may be present. Containers with WIPP-prohibited items or whose contents cannot be verified (e.g., due to impenetrable objects or otherwise unidentifiable) are prohibited from disposal at the WIPP facility until the prohibited condition is removed, container contents are made acceptable, or no prohibited items are verified. The containers that require corrective action will be flagged for appropriate disposition. The following are summaries of potential prohibited items that may be found in the waste.

3.5.1 Potential Prohibited Items in RF Wastes

Prohibited items that may be present in containers of RF debris waste include, but are not limited to, sealed containers greater than 4 liters pressurized containers (e.g., unvented aerosol cans or compressed gas cylinders with relief valve in place), prohibited containerized liquids (e.g., bottles, cans, or lead cell batteries with liquids in excess of WIPP permit requirements), liquids in excess of 1% within the payload container, and sharp or heavy objects that do not meet the criteria for packaging protection. [2, 54, 38, 51, 100]

Containers of RF bulk or direct loaded sludge, solidified liquids, or salt wastes (IDCs RF-001, RF-002, RF-003, RF-004, RF-005, RF-007, RF-095, RF-700, RF-741, RF-742, RF-744, RF-745, RF-749, RF-800, RF-801, RF-802, RF-803, RF-807, and RF-995) may contain prohibited liquids. IDC RF-002 sludge packaged prior to 1973 may contain bottles of liquid chemical waste or mercury. Visual

examination of containers of RF bulk or direct loaded sludge, solidified liquids, or salt waste packaged in 55-, 83-, or 85-gallon drums would not provide additional relevant information to the RTR examination. [2, 3, 51, 52, 54]

RF homogeneous solid waste packaged in small containers may include prohibited sealed containers greater than 4 liters (e.g., clamshells) and prohibited containerized liquids. [2, 3, 51, 54]

3.5.2 Potential Prohibited Items in MD Wastes

Prohibited items that may be present in containers of MD debris waste include, but are not limited to, sealed containers greater than 4 liters (e.g., 30-gallon drum, taped 8804 or 8806 Vollrath cans, and capped pipe sections), pressurized containers (e.g., unvented aerosol cans or gas cylinder with relief valve in place), prohibited containerized liquids (including bottles of mercury), and excess liquids. [3, 4]

MD homogeneous solids waste may include prohibited liquids in the payload container. Visual examination of containers of MD bulk or direct loaded homogeneous solids waste (e.g., IDCs MD-834, MD-835, and MD-836) packaged in 55-, 83-, or 85-gallon drums would not provide additional relevant information to the RTR examination. [4]

3.5.3 Potential Prohibited Items in BC Wastes

Containers of BC debris waste may include prohibited pressurized containers (e.g., unvented aerosol cans or gas cylinder with relief valve in place) and prohibited containerized liquids (e.g., small bottles of liquids and liquids in plastic bags). [5]

3.5.4 Potential Prohibited Items in BL Wastes

Containers of BL homogeneous solid and debris wastes may include prohibited sealed containers greater than 4 liters (e.g., if sealed, tin-plated steel cans 4-3/8 in. by 20 to 24 in., or 2R inner containers greater than 10-in. length in type 6M drums). Prohibited liquids may also be present in the containers of debris waste. [50]

3.5.5 Potential Prohibited Items in AW Wastes

Prohibited liquids and sealed containers greater than 4 liters may be present in the containers of AW debris waste shipped to AMWTP. [164, 264]

3.5.6 Potential Prohibited Items in RL Wastes

Containers of RL debris waste are verified by radiography at RL to ensure no prohibited items are present in the container to be shipped to AMWTP. Potential prohibited items that are present in the waste at RL include prohibited liquids, unpunctured aerosol cans, and sealed containers greater than 4 liters (e.g. 5-quart, 4-gallon, and 5-gallon cans). [180]

3.5.7 Potential Prohibited Items in AE Wastes

Waste packaged prior to February 1981 may contain prohibited items including, but not limited to, prohibited liquids, pressurized containers (e.g., unvented aerosol cans or compressed gas cylinders with relief valve in place), and sealed containers greater than 4 liters. [270, 262]

3.5.8 Potential Prohibited Items in SD Wastes

Prohibited waste/items that may be found in pre-1980 INL-exhumed SDA waste containers may be variable. The types of prohibited items that may be encountered include, but are not limited to; aerosol cans/pressurized containers, liquids, sealed containers greater than 4 liters, reactive waste, ignitable waste, or corrosive waste. [286]

Visual examination of containers of SD bulk or direct loaded sludge waste packaged in 55-, 83-, or 85-gallon drums would not provide additional relevant information to the RTR examination.

3.5.9 Potential Prohibited Items in LA Wastes

Procedures in place during the 1970s allowed containers greater than 4 liters, sealed with tape, to be used for waste packaging. Prior to 1994, potentially ignitable, corrosive, or reactive materials (e.g., liquids, unpunctured aerosol cans) may be present in older containers included in this waste stream. The presence of containerized and uncontainerized liquids has also been observed. Some 55-gallon drums will contain overpacked 30-gallon drums. Lead shielding was sometimes used. [272]

3.5.10 Potential Prohibited Items in ID Wastes

Containers of ID debris and homogeneous solids waste may contain prohibited items including, but not limited to, prohibited liquids, sealed containers greater than 4 liters, and unvented aerosol cans. [273]

3.5.11 Potential Prohibited Items in Offsite Wastes

Offsite wastes received under the AMWTP Offsite Waste Program must meet the acceptance criteria outlined in procedure MP-TRUW-8.41, Offsite DOE CH-TRU Waste Acceptance. Some offsite wastes received will be characterized and profiled by Central Characterization Project (CCP). These waste stream descriptions, composition, packaging, and prohibited items information are available from the AMWTP offsite waste coordinator.

Other offsite wastes are received that will be characterized and profiled by AMWTP, (e.g., RL, AW, ID). Waste with prohibited items may be accepted if treatment by the AMWTP renders the waste acceptable for disposal. [189, 190]

Table 3.1. Explanation of reference table content.

WMCG	*WMC Description*		*SCG*
WMC	*Generator – IDC*	*IDC Description (A concise description [title] of the waste which is also recorded in WTS.)*	
WIPP Status	*This field contains statement as to whether waste is or is not a candidate for shipment to WIPP, managed as MLLW, or managed by CCP. WIPP candidate waste is characterized as TRU and determined to be defense related.*		
Waste Description	*This field contains a brief description of the primary waste form(s) expected in the waste. It also identifies other waste forms that may be present in the waste (i.e., waste may also contain less than 50% by volume...), for example: Inorganic sludge generated at RF in Building 774 from precipitation of aqueous waste. Waste may also contain less than 50% by volume debris items (e.g., surgeon's gloves, glovebox gloves).*		
Inner Packaging	*This field contains a brief description of the inner packaging (listed from innermost layer to outer layer), for example: 1-gallon cardboard carton/poly bag/poly bag or direct loaded into the waste drum.* **NOTE:** *Number of layers of packaging may vary from those identified in Section 4.0.*		
Drum Preparation	*This field contains a brief description of the typical drum preparation (listed from outermost layer to inner layer), for example: rigid liner (after 1971)/poly drum bag/poly drum bag.* **NOTE:** *A drum may not have all liners identified in Section 4.0.*		
Box/Bin Preparation	*This field contains a brief description of the typical box/bin preparation (if boxes or bins were used to package the waste), for example: poly box bag/cardboard box liner.* **NOTE:** *A box may not have all liners identified in Section 4.0.*		
Primary Waste Parameter(s)	*This field identifies the **expected** waste parameters associated with the **primary** waste form(s). This information is based on the IDC and waste descriptions **designated** by the waste generator in AK source documents. It does **not** identify the **minor** waste parameter(s) for inner packaging or other waste forms that may **also** be present in a drum. For example: iron-based metals/alloys, aluminum-based metals/alloys, other metals is identified as the expected waste parameters for IDC RF-480 (light metal) although other wastes forms including plastic, paper, rubber, or glass may also be present in a drum.*		
Special Notes	*This field contains information, such as potential prohibited items, acceptable and unacceptable packaging variations, and polychlorinated biphenyl (PCB) information. This field may also provide information regarding recommended IDC/WMC changes.*		

4.0 WASTE MATRIX CODE REFERENCE TABLES

NOTE: *The following tables do not contain all possible variations in packaging configurations. Observations of additional packaging variations should be noted during characterization activities. Abbreviated tables may be provided for the IDCs associated with the wastes received under the AMWTP Offsite Waste Program that will be characterized and profiled by CCP. The waste stream description, composition, packaging, and prohibited items information for these abbreviated tables are available from the AMWTP offsite waste coordinator.*

N/A	*N/A*	*N/A*
N/A	**NONE**	**N/A**
WIPP Status	Not a WIPP Candidate (see Special Notes)	
Waste Information	N/A	
Special Notes	This includes all possible variations including, but not limited to, N/A, Null, UNK, or any other variation that indicates the IDC is not identified. This is an unknown waste and RTR will recommend an IDC based on the following recommendations and an AK evaluation will be performed: • If the waste is >50% by volume homogeneous solids, recommend UN-00A. • If the waste is >50% by volume debris, recommend UN-00B. • If the waste is >50% by volume soil, recommend UN-00C. • If the waste is >50% by volume liquid, recommend UN-00D. • If the waste form cannot be determined, recommend PC-000.	

N/A	*N/A*	*N/A*
N/A	**ID-000**	**Not Recorded-Retrieved RFP TRU UNK**
WIPP Status	Not a WIPP Candidate – Expired IDC (see Special Notes)	
Waste Information	N/A	
Special Notes	ID-000 is an unknown waste and RTR will recommend an IDC based on the following recommendations and an AK evaluation will be performed: • If the waste is >50% by volume homogeneous solids, recommend UN-00A. • If the waste is >50% by volume debris, recommend UN-00B. • If the waste is >50% by volume soil, recommend UN-00C. • If the waste is >50% by volume liquid, recommend UN-00D. • If the waste form cannot be determined, recommend PC-000.	

Unknown/Other Solids		*Unknown/Other Solids*	*S9000*
S9000	**PC-000**	**Post-Characterization Unknown**	
WIPP Status	Not a WIPP Candidate (see Special Notes)		
Waste Description	Temporary IDC for intact containers of waste without sufficient historical information and the physical form of the waste (i.e., homogeneous solids, debris or soil) is not known after characterization activities (e.g., after RTR).		
Inner Packaging	TBD by VE		
Drum Preparation	TBD by VE		
Box Preparation	TBD by VE		
Primary Waste Parameter(s)	TBD by VE		
Special Notes	Final IDC assignment required before waste can be shipped to WIPP. VE will be used to identify physical form and waste material parameters. Generator-specific IDC and WMC are recommended based on physical form, packaging configuration, labeling on the drum, or any marking or labeling on items within the container that would identify the generator IDC. If not possible to recommend a generator-specific IDC, then recommend change to the most applicable IDC from the following: If > 50% by volume homogeneous solid recommend a, b, or c: a. If a definitive assessment determines waste is inorganic solids, recommend change to IDC BN-505 and assign Inorganic Matrix as the waste material parameter. b. If a definitive assessment determines waste is organic solids but the waste is not PCB contaminated, recommend change to IDC BN-513 and assign Organic Matrix as the waste material parameter. c. If the type of homogeneous solids is indeterminate, recommend change to IDC BN-511 (which is the default IDC that conservatively assumes waste is Organic and PCB contaminated) and assign Organic Matrix as the waste parameter. If > 50% by volume debris, recommend change to IDC UN-00B for an AK evaluation. If > 50% by volume soils, gravel, or sand (natural geologic material < 2.36 inches [60 millimeters]), recommend change to IDC. • If a definitive assessment determines waste is **not** PCB contaminated, recommend change to IDC BN-522. • If waste may be PCB contaminated, recommend change to IDC BN-501. If > 50% by volume liquids, recommend change to IDC. • If a definitive assessment determines waste is **not** PCB contaminated, recommend change to IDC BN-529. • If waste may be PCB contaminated, recommend change to IDC BN-528 If indeterminate, VE may retain IDC PC-000 but must choose "cannot be verified" on the WTS screen. An AK evaluation will be performed for all containers that were assigned the temporary IDC PC-000.		

N/A	*N/A*		*N/A*
N/A	**RF-000**	**Unknown**	
WIPP Status	Not a WIPP Candidate – Expired IDC (see Special Notes)		
Waste Information	N/A		
Special Notes	RF-000 is an unknown waste and RTR will recommend an IDC based on the following recommendations: • If the waste is >50% by volume homogeneous solids, recommend UN-00A. • If the waste is >50% by volume debris, recommend UN-00B. • If the waste is >50% by volume soil, recommend UN-00C. • If the waste is >50% by volume liquid, recommend UN-00D. • If the waste form cannot be determined, recommend PC-000.		

Unknown/Other Solids		*Unknown/Other Solids*	*S9000*
S9000	**UN-000**	**Undetermined Form**	
WIPP Status	Not a WIPP Candidate (see Special Notes)		
Waste Description	Temporary IDC for intact containers of waste without sufficient historical information. Physical form of the waste (e.g., homogeneous solids, debris, or soil) is not known; therefore, applicable characterization activities (e.g., radioassay, RTR/VE) and an AK evaluation must be completed before IDC assignment can be made.		
Inner Packaging	TBD by RTR or VE		
Drum Preparation	TBD by RTR or VE		
Box Preparation	TBD by RTR or VE		
Primary Waste Parameter(s)	TBD by RTR or VE		
Special Notes	Final IDC assignment required before waste can be shipped to WIPP. RTR or VE will be used to identify physical form and waste material parameters. Generator-specific IDC and WMC are recommended based on physical form, packaging configuration, labeling on the drum, or any marking or labeling on items within the container that would identify the generator IDC. If not possible to recommend a generator-specific IDC after RTR, then recommend change to the most applicable IDC from the following: • If > 50% by volume homogeneous solids, recommend change to IDC UN-00A (conservatively assign Organic Matrix as the waste parameter, unless a definitive assessment determines the waste parameter is Inorganic Matrix). • If > 50% by volume debris, recommend change to IDC UN-00B. • If > 50% by volume soils, gravel, or sand (natural geologic material < 2.36 inches [60 millimeters]), recommend change to IDC UN-00C. • If >50% by volume liquids, recommend change to IDC UN-00D. • If indeterminate, RTR may recommend change to IDC PC-000. If VE is performed, see PC-000 for recommendations. An AK evaluation will be performed for all containers that were assigned the temporary IDCs UN-00A, UN-00B, UN-00C, UN-00D, or PC-000. AKE may retain or recommend temporary IDCs UN-00A, UN-00B, UN-00C, UN-00D, or PC-000 if VE is required prior to assigning final IDC.		

Solidified Organics		*Unknown/Other Homogeneous Solids*	*S3000*
S3900	**UN-00A**	**Undefined Homogeneous Solids**	
WIPP Status	Not a WIPP Candidate (see Special Notes)		
Waste Description	Temporary IDC for intact containers of homogeneous solids waste without sufficient historical information, that require completion of characterization activities (e.g., radioassay, RTR/VE) and AK evaluation before IDC assignment can be made. UN-00A is considered PCB waste until a final determination of the IDC is made.		
Inner Packaging	TBD by RTR or VE		
Drum Preparation	TBD by RTR or VE		
Box Preparation	TBD by RTR or VE		
Primary Waste Parameter(s)	Organic Matrix.		
Special Notes	Final IDC assignment required before waste can be shipped to WIPP. RTR or VE will be used to identify physical form and waste material parameters. Generator-specific IDC and WMC are recommended based on physical form, packaging configuration, labeling on the drum, or any marking or labeling on items within the container that would identify the generator IDC. If not possible to recommend a generator-specific IDC after RTR, then recommend a change to the most applicable from the following: • If > 50% by volume debris, recommend change to IDC UN-00B. • If > 50% by volume soils, gravel, or sand (natural geologic material < 2.36 inches [60 millimeters]), recommend change to IDC UN-00C. • If > 50% by volume liquids, recommend change to IDC UN-00D. • If indeterminate waste type, recommend change to IDC UN-000. An AK evaluation will be performed for all containers that were assigned the temporary IDC UN-00A. AKE may retain IDC UN-00A and request a VE be required prior to assigning final IDC. If VE is performed, see PC-000 for recommendations.		

Heterogeneous Debris Waste		*Unknown/Other Debris*	*S5000*
S5900	**UN-00B**	**Undefined Debris**	
WIPP Status	Not a WIPP Candidate (see Special Notes)		
Waste Description	Temporary IDC for intact containers of debris waste without sufficient historical information that requires completion of characterization activities (e.g., radioassay, RTR/VE) and AK evaluation before IDC assignment can be completed.		
Inner Packaging	TBD by RTR or VE		
Drum Preparation	TBD by RTR or VE		
Box Preparation	TBD by RTR or VE		
Primary Waste Parameter(s)	TBD by RTR or VE		
Special Notes	Final IDC assignment required before waste can be shipped to WIPP. RTR or VE will be used to identify physical form and waste material parameters. Generator-specific IDC and WMC are recommended based on physical form, packaging configuration, labeling on the drum, or any marking or labeling on items within the container that would identify the generator IDC. If not possible to recommend a generator-specific IDC after RTR, then recommend a change to the most applicable from the following: • If >50% by volume homogeneous solids, recommend change to IDC UN-00A. • If >50% by volume soils, gravel, or sand (natural geologic material <2.36 inches [60 millimeters]), recommend change to IDC UN-00C. • If >50% by volume liquids, recommend change to IDC UN-00D. • If indeterminate waste type, recommend change to IDC UN-000. An AK evaluation will be performed for all containers that were assigned the temporary IDC UN-00B. AKE may retain IDC UN-00B if VE required prior to assigning final IDC. If VE is performed, see PC-000 for recommendations.		

Soils	*Unknown/Other Soil/Gravel*		*S4000*
S4900	**UN-00C**	**Undefined Soil**	
WIPP Status	Not a WIPP Candidate (see Special Notes)		
Waste Description	Temporary IDC for intact containers of soil without sufficient historical information that requires completion of characterization activities (e.g., radioassay, RTR/VE) and AK evaluation before IDC assignment can be completed.		
Inner Packaging	TBD by RTR or VE		
Drum Preparation	TBD by RTR or VE		
Box Preparation	TBD by RTR or VE		
Primary Waste Parameter(s)	Soils/gravel		
Special Notes	Final IDC assignment required before waste can be shipped to WIPP. RTR or VE will be used to identify physical form and waste material parameters. Generator-specific IDC and WMC are recommended based on physical form, packaging configuration, labeling on the drum, or any marking or labeling on items within the container that would identify the generator IDC. If not possible to recommend a generator-specific IDC after RTR, then recommend a change to the most applicable from the following: • If > 50% by volume homogeneous solids, recommend change to IDC UN-00A. • If > 50% by volume debris, recommend change to IDC UN-00B. • If > 50% by volume liquids, recommend change to IDC UN-00D. • If indeterminate waste type, recommend change to IDC UN-000. An AK evaluation will be performed for all containers that were assigned the temporary IDC UN-00C. AKE may retain IDC UN-00C if VE required prior to assigning final IDC. If VE is performed, see PC-000 for recommendations.		

N/A	*Unknown/Other Liquids*		*N/A*
N/A	**UN-00D**	**Undefined Liquids**	
WIPP Status	Not a WIPP Candidate (see Special Notes)		
Waste Description	Temporary IDC for intact containers of liquid waste without sufficient historical information that requires completion of characterization activities (e.g., radioassay, RTR/VE) and an AK evaluation before IDC assignment can be completed.		
Inner Packaging	TBD by RTR or VE		
Drum Preparation	TBD by RTR or VE		
Primary Waste Parameter(s)	N/A		
Special Notes	Liquid absorption and final IDC assignment required before waste can be shipped to WIPP. RTR or VE will be used to identify physical form and waste material parameters. Generator-specific IDC and WMC are recommended based on physical form, packaging configuration, labeling on the drum, or any marking or labeling on items within the container that would identify the generator IDC. If not possible to recommend a generator-specific IDC, then recommend a change to the most applicable from the following: • If >50% by volume homogeneous solids, recommend change to IDC UN-00A. • If >50% by volume debris, recommend change to IDC UN-00B. • If >50% by volume soils, gravel, or sand (natural geologic material ≤2.36 inches [60 millimeters]), recommend change to IDC UN-00C. • If indeterminate waste type, recommend change to IDC UN-000. An AK evaluation will be performed for all containers that were assigned the temporary IDC UN-00D. AKE may retain IDC UN-00D if VE required prior to assigning final IDC. If VE is performed, see PC-000 for recommendations.		

Solidified Inorganics		*Wastewater Treatment Sludges*	*S3000*
S3121	**RF-001**	**First Stage Sludge**	
WIPP Status	WIPP Candidate		
Waste Description	Inorganic sludge generated in Building 774 from the precipitation of process aqueous liquids. After 1979, waste consisted of combined first and second stage sludge. Up to 50 pounds Portland cement added to drum (primarily at bottom of drum, rigid liner, and/or drum bags) to absorb liquids. After 1982, cement added at top of sludge prior to sealing O-ring drum bag. Waste may also contain <50% by volume cellulosic, plastic, rubber and metal debris items (e.g., surgeon's gloves, glovebox gloves, leaded rubber aprons, filters, plastic tubing, and bolts). [68]		
Inner Packaging	Direct loaded into the waste drum. A small number of drums may contain sludge waste within poly bags, metal cans, and/or poly bottles. See Special Notes below.		
Drum Preparation	Rigid liner (after 1971)/poly drum bag/O-ring load-out drum bag Up to 5 pounds Portland cement may be added on top of inner sealed poly drum bag. Some drums may be either lead-lined or contain a lead-taped rigid liner.		
Box Preparation	Drums of this waste may be direct loaded into standard waste boxes (SWBs) as an alternate packaging configuration for shipment to WIPP.		
Primary Waste Parameter(s)	Inorganic Matrix		
Special Notes	Prior to 1982, no cement or absorbent was added at the top of the sludge prior to sealing the O-ring drum bag; therefore, excess liquids may be present on top of the sludge. Based on RTR results, waste may also contain prohibited liquids within the drum bag or between the rigid liner and drum, as well as on top of sludge packaged after 1982. Waste may also contain compressed gases (including aerosol cans), prohibited liquids in small containers, sealed containers >4 liters, sharp objects, impenetrable objects, or impenetrable lead shielding.[242] Visual examination of this bulk or direct loaded sludge packaged in 55-, 83-, or 85-gallon drums would not provide additional relevant information to the RTR examination. A small number of drums with Container Prefixes 741 or 7412 may contain multiple packages of sludge waste packaged in poly bags, poly bottles, metal cans, or other small containers instead of sludge directly loaded into drum. [7, 11] Although the subject drums have a configuration similar to RF-292, RF-290, and RF-696, AK does not support the reassignment to one of these IDCs, provided the historical ID begins with "IDRF0741" or "IDRF7412." Potential IDC changes should still be recommended and evaluated for other historical IDs or when there is a large discrepancy between current and historical ID container weights. If indeterminate, recommend change to IDC UN-00A and an AK evaluation will be performed. Historical ID typically begins with "IDRF0741" or "IDRF7412."		

Solidified Inorganics		*Solidified Homogeneous Solids*	*S3000*
S3150	**LA-002**	**TA-50 Radioactive Liquid Waste Treatment Facility**	
WIPP Status	WIPP Candidate – Offsite Waste Solid Sampled by AMWTP and Characterized by CCP		
Waste Information	Contact the AMWTP offsite waste coordinator for descriptions of the waste, inner packaging, drum preparation, primary waste material parameters, and prohibited items. [194, 195]		
Special Notes	If waste is <50% by volume homogeneous solids or contains prohibited items, notify the AMWTP offsite waste coordinator.		

Solidified Inorganics		*Wastewater Treatment Sludges*	*S3000*
S3121	**RF-002**	**Second Stage Sludge**	
WIPP Status	WIPP Candidate		
Waste Description	Inorganic sludge generated in Building 774 from precipitation of liquid effluent from First Stage Treatment, and aqueous liquid waste from all process areas at RF. Up to 50 pounds Portland cement was added in layers as sludge was placed in the drum, as well as inside poly drum bag to absorb liquids. Drums packaged prior to 1973 may also contain <50% by volume other waste including debris items (e.g., electric motors, batteries) and bottles of liquid chemical waste or mercury. [3]		
Inner Packaging	Direct loaded into the waste drum		
Drum Preparation	Rigid liner (after1971)/poly drum bag/O-ring load-out drum bag Up to 5 pounds of Portland cement may have been added on top of each sealed poly drum bag.		
Box Preparation	Drums of this waste may be direct loaded into SWBs as an alternate packaging configuration for shipment to WIPP.		
Primary Waste Parameter(s)	Inorganic Matrix		
Special Notes	Based on RTR results, waste may contain prohibited liquids on top of the sludge, within the drum bag, or between the rigid liner and drum. Waste may also contain compressed gases (including aerosol cans), prohibited liquids in small containers, sealed containers >4 liters, sharp objects, or impenetrable objects. A 2.5-gallon propane tank with prohibited liquids was identified by RTR in one drum. [242] Visual examination of this bulk or direct loaded sludge packaged in 55-, 83-, or 85-gallon drums would not provide additional relevant information to the RTR examination. One drum of second stage sludge packaged after 1973 included a small container of waste (contaminated soil) buried in the sludge. [76] Radionuclide sources may have been placed in individual drums of sludge waste prior to 1980. [88] Historical ID typically begins with "IDRF0742."		

Solidified Inorganics		*Inorganic Sludges*	*S3000*
S3120	**LA-003**	**Solidified Inorganics**	
WIPP Status	WIPP Candidate – Offsite Waste Solid Sampled by AMWTP and Characterized by CCP		
Waste Information	Contact the AMWTP offsite waste coordinator for descriptions of the waste, inner packaging, drum preparation, primary waste material parameters, and prohibited items. [195, 196]		
Special Notes	If waste is <50% by volume homogeneous solids or contains prohibited items, notify the AMWTP offsite waste coordinator.		

Solidified Organics		*Absorbed Organic Liquids*	*S3000*
S3114	**RF-003**	**Organic Setups, Oil Solids**	
WIPP Status	WIPP Candidate – Characterized by CCP		
Waste Description	Organic sludge-like waste generated in Building 774 Grease Plant by mixing solvent and oils from machining operations with Micro-Cel® E (i.e., synthetic calcium silicate) and small quantities of Oil-Dri®. Up to 20 pounds Oil-Dri® was added at the top and/or bottom of the drum, rigid liner, and/or drum bags.		
Inner Packaging	Direct loaded into the waste drum.		
Drum Preparation	Rigid liner (after 1971)/poly drum bag/O-ring drum load-out bag[2, 54]		
Primary Waste Parameter(s)	Organic Matrix		
Special Notes	PCB waste with any observable liquid is prohibited from disposal at WIPP. Based on RTR results, waste may contain prohibited liquids on top of the waste, within the drum bag, or between the rigid liner and drum. Waste may also contain aerosol cans, prohibited liquids in small containers, sealed containers >4 liters, sharp objects, or impenetrable objects. Some containers may have a wire mesh insert.[242] Visual examination of this bulk or direct loaded waste packaged in 55-, 83-, or 85-gallon drums would not provide additional relevant information to the RTR examination. This waste has been identified as PCB contaminated. The net weight of waste should be used as the "PCB Mass" in WTS. One of the containers with historical drum numbers IDRF074313464 through IDRF074313472 may contain a 1-liter bottle of organic liquid waste. [3] Liquid treatment is authorized for this IDC under approval of the Risk Based Disposal Authorization (RBDA) and liquid treatment is only allowed if waste is targeted for shipment to WIPP. CH2M-WG Idaho, LLC (CWI) is authorized to perform liquid treatment and repackaging of this waste for CCP. See offsite waste coordinator for information on CWI treated wastes. Historical ID typically begins with "IDRF0743."		

Solidified Inorganics		*Inorganic Particulates*	*S3000*
S3110	**LA-004**	**Solidified Inorganics from TA-55 Facility**	
WIPP Status	WIPP Candidate – Offsite Waste Solid Sampled by AMWTP and Characterized by CCP		
Waste Information	Contact the AMWTP offsite waste coordinator for descriptions of the waste, inner packaging, drum preparation, and primary waste material parameters. [197, 235]		
Special Notes	If waste is <50% by volume homogeneous solids or contains prohibited items, notify the AMWTP offsite waste coordinator.		

Solidified Inorganics		*Solidified Homogeneous Solids*	*S3000*
S3150	**RF-004**	**Special Setups**	
WIPP Status	WIPP Candidate		
Waste Description	Solidified inorganic waste generated in Building 774 by mixing aqueous chemical liquid waste generated by various operations at RF with a cement mixture and adding up to 15 pounds of cement to the top of the sludge. Up to 20 pounds of cement was added to top and/or bottom of drum, rigid liner, and/or O-ring drum bag.		
Inner Packaging	Direct loaded into the waste drum. A small number of drums may contain poly bottles. See Special Notes below.		
Drum Preparation	Rigid liner (after 1971)/poly drum bag/O-ring drum load-out bag		
Box Preparation	Drums of this waste may be direct loaded into SWBs as an alternate packaging configuration for shipment to WIPP.		
Primary Waste Parameter(s)	Inorganic Matrix		
Special Notes	Prohibited liquids may be present in this sludge waste. [41] Based on RTR results, waste may contain prohibited liquids within the drum bag. Waste may also contain sealed containers > 4 liters, sharp objects, or impenetrable objects. [242] Visual examination of this bulk or direct loaded sludge packaged in 55-, 83-, or 85-gallon drums would not provide additional relevant information to the RTR examination. Some drums may contain primarily poly bottles of solidified waste instead of direct loaded sludge waste. An AK evaluation is required if poly bottles of solidified waste are identified. Make a recommended IDC change to IDC UN-00A and an AK evaluation will be performed. Other drums may not contain sludge but contain debris waste (i.e., polyethylene bottles that previously contained liquid waste). A small amount of cement was added to empty bottles before packaging into drums. Recommend change to IDC RF-337 if the drum only contains bottles with small amounts of cement. IDC RF-004 was replaced by IDC RF-802 in 1986. Historical ID typically begins with "IDRF0744."		

Salt Waste		*Salt Waste*	*S3000*
S3140	**LA-005**	**LANL Mixed Salt Waste**	
WIPP Status	WIPP Candidate – Offsite Waste Solid Sampled by AMWTP and Characterized by CCP		
Waste Information	Contact the AMWTP offsite waste coordinator for descriptions of the waste, inner packaging, drum preparation, and primary waste material parameters. [197, 235]		
Special Notes	If waste is <50% by volume homogeneous solids or contains prohibited items, notify the AMWTP offsite waste coordinator.		

N/A	*N/A*		*N/A*
N/A	**IW-005**	**Evaporator Salts-Retrieved RF TRU**	
WIPP Status	N/A – Overpack Container		
Waste Description	IDC IW-005 is not to be used for characterizing waste (see Special Notes). The MIII bins contain evaporator salts that were generated by the Building 774 evaporator system at RF. The evaporator salts were packaged in 55-gallon drums by RF prior to 1972 and shipped to INL. The drums were subsequently placed into MIII bins and transferred to Pad R. [97]		
Bin Configuration	Bins may contain up to eight 55-gallon drums. Absorbent (~100 pounds) was routinely spread inside the MIII bins. [123, 124]		
Primary Waste Parameter(s)	N/A – overpack container		
Special Notes	IDC IW-005 is reserved to track bins packaged with waste retrieved from the pits and is not to be used to characterize the waste. Bins may be labeled with an identifier including the letters "RR." Intact drums of evaporator salt unloaded from the bins or unloaded bins of evaporator salts after RTR are assigned IDC RF-745. [97]		

Salt Waste	*Nitrate Salts*		*S3000*
S3143	**RF-005**	**Evaporator Salts**	
WIPP Status	MLLW – Not a WIPP Candidate		
Waste Description	Salt residues generated by Building 774 evaporator system from concentrating and drying liquid waste from the solar evaporation ponds. Waste may also contain <50% by volume surgeon's gloves, paper, rags, and metal debris.		
Inner Packaging	Direct loaded into waste drum or box.		
Drum Preparation	Up to 2 plastic drum bags and/or a crepe paper bag.		
Box Preparation	Plastic liner/cardboard liner		
Primary Waste Parameter(s)	Other inorganic materials		
Special Notes	May contain Portland cement used as absorbent. Based on RTR, waste may contain prohibited liquids. [242] Visual examination of this bulk or direct loaded salt packaged in 55-, 83-, or 85-gallon drums would not provide additional relevant information to the RTR examination. A majority of the waste should contain TRU activity concentration of <10 nCi/g. Historical ID typically begins with "IDRF0745."		

Solidified Inorganics		*Solidified Homogeneous Solids*	*S3000*
S3150	**LA-006**	**Cemented TRU Waste**	
WIPP Status	WIPP Candidate – Offsite Waste Solid Sampled by AMWTP and Characterized by CCP		
Waste Information	Contact the AMWTP offsite waste coordinator for descriptions of the waste, inner packaging, drum preparation, primary waste material parameters, and prohibited items. [197, 198]		
Special Notes	If waste is <50% by volume homogeneous solids or contains prohibited items, notify the AMWTP offsite waste coordinator.		

Heterogeneous Debris Waste		*Unknown/Other Debris*	*S5000*
S5400	**LA-007**	**Mixed Heterogeneous Debris from TA-55**	
WIPP Status	WIPP Candidate		
Waste Description	Combustible and non-combustible waste. Debris waste includes iron-based metals, plastic-based and cellulose-based items, noncombustible items, and lesser quantities of homogeneous solids (less than 50 percent by volume). Plastic-based waste includes (but may not be limited to): bottles, dry-box gloves (unleaded neoprene base), gloves including leaded gloves, ion-exchange resins, Plexiglas, polyethylene and vinyl, polystyrene, polyvinyl chloride plastic, tape, Tygon tubing, and vials. Rubber- and Teflon-based waste includes rubber gloves, Teflon tape, gaskets, and stoppers. Cellulose-based waste includes (but may not be limited to): booties, cardboard, cotton gloves, coveralls, laboratory coats, paper, rags, wood, and similar materials. Noncombustible debris waste includes (but may not be limited to): bottles (e.g., glass and metal), cans (e.g., steel and brass), composite high-efficiency particulate air (HEPA) filters, crucibles, equipment (e.g., furnaces, foundry parts, machine tools and parts), fluorescent bulbs, glass, gloveboxes, glovebox windows, graphite, lead (e.g., shielding), metal pipes, miscellaneous labware, metal (e.g., beryllium), motors, pumps, slag, small tools, and ventilation ductwork. Homogeneous solid waste includes: hydroxide cake/filter materials, salts, and ash residues. A small fraction of waste may include liquids (e.g., waste oils and organics) and solids (e.g., nitrate salts) absorbed or mixed with absorbent materials which may include Ascarite, diatomaceous earth, kitty litter, vermiculite, Waste Lock 770, and/or zeolite.[272, 281]		
Inner Packaging	The waste material is placed directly into one or more bag-out bags (also called inner bags). Waste may also be packaged into a stainless-steel dressing jar, a slip-top can, and/or an unsealed metal container before it is placed into the bag-out bag. Once removed from the glovebox line, the bagged out container(s) may also be put into a secondary stainless-steel slip-top container.[272]		
Drum Preparation	Up to two 5- to 12-mil plastic liner bags closed with tape or folded, and/or one 90-/125-mil rigid polyethylene liner with lid. Rigid liner may be contained in a bag-out bag. Remediated/repackaged waste may be packaged with or without a single plastic liner bag with one of the following drum configurations depending on the remediation facility: no liner, a fiberboard liner, a pipe overpack container, or a 90-/125-mil rigid polyethylene liner without lid.[272]		
Box Preparation	Waste items may be packaged in corrugated metal boxes (CMBs). The CMB may have a ¾ inch plywood liner with a horsetailed closed bagout bag containing bagged out waste. The waste items are not individually wrapped.[272, 274, 281] Individual 55-gallon drums may be overpacked into SWBs. SWBs may include 55-gallon drums of LA-008, LA-009, or LA-010 IDCs.[281]		
Primary Waste Parameter(s)	Iron-based metals, other inorganic materials, and plastics.[272, 281]		
Special Notes	Prohibited items identified are, containers greater than 4 liters, light ballasts, aerosol cans and containerized and uncontainerized liquids.[272] CMB #52427 will contain a 6 in. diameter x 48 in. length sealed flanged pipe with 1 in. of free liquid.[281] Lead shielding is often used.[272] Waste with the potential to tear the plastic bag, such as broken glass, is first placed in a metal container with a slip-top (also referred to as a slip-fit) lid, taped closed, and then placed into the plastic bag. Larger waste items with sharp edges are properly taped or otherwise rendered blunt.[272] Homogeneous solids were packaged in 1-quart to 5-gallon cans.[272] If <50% by volume debris, recommend an IDC change and notify the AMWTP offsite waste coordinator. IDC UN-000 may be used. This waste is from LANL WSP LA-MHD01.001.[281]		

Solidified Inorganics		*Wastewater Treatment Sludges*	*S3000*
S3121	**RF-007**	**Building 374 Dry Sludge**	
WIPP Status	WIPP Candidate		
Waste Description	Inorganic sludge generated in Building 374 in support of Pu recovery activities. This sludge was dried, or a moist sludge was mixed with cement or a cement and diatomaceous earth mixture. Oil-Dri®, Vermiculite or other absorbents may be present in some drums. [40] Waste may also contain <50% by volume plastic, rubber and metal debris items (e.g., leaded rubber gloves). [69]		
Inner Packaging	Direct loaded into the waste drum		
Drum Preparation	Rigid liner (after 1971)/poly drum bag/O-ring load-out drum bag		
Box Preparation	Drums of this waste may be direct loaded into SWBs as an alternate packaging configuration for shipment to WIPP.		
Primary Waste Parameter(s)	Inorganic Matrix		
Special Notes	Based on RTR results, waste may contain prohibited liquids on top of the sludge, within the drum bag, or between the rigid liner and drum. Waste may also contain sharp objects. [242] Visual examination of this bulk or direct loaded sludge packaged in 55-, 83-, or 85-gallon drums would not provide additional relevant information to the RTR examination. May have cement in drum. Historical ID typically begins with "IDRF0747."		

Heterogeneous Debris Waste		*Unknown/Other Debris*	*S5000*
S5400	**LA-008**	**Mixed Heterogeneous Debris from TA-3**	
WIPP Status	WIPP Candidate		
Waste Description	Plastic-based combustibles, cellulose-based combustibles, and other miscellaneous materials. Examples of the combustible waste include paper, rags, plastic, rubber, wood-based HEPA filters, filter media, cardboard, wipes, paper towels, filter/grinding/transfer paper, stoppers, tubing, valves, bottles, containers, plastic sheeting, cotton gloves, cotton coveralls, Nomex coveralls, paper coveralls, plastic booties, tape, laboratory coats, nylon booties, polyvinyl chloride plastic, Teflon products, Plexiglass, supplied-air hoses (e.g., rubber, brass, steel), leather gloves, latex gloves, respiratory protection, hoses, hoods, various hand tools, ladders, wood, and leaded glovebox gloves. Examples of the non-combustible waste includes small tools, equipment, cans, motors, process equipment, gloveboxes, glovebox windows, ductwork, composite HEPA filters, metal pipes, graphite, vermiculite, dust, fiberglass filter media, brass items, steel items, glassware, ladders, filter frames, titanium and steel experimental containers, valves, shielding, foil, lead solder, and crucibles. This waste may contain no more than 50% homogenous solids and soils. Homogenous solids are from solidification and absorption of liquids and immobilization of particulate materials utilizing Vermiculite, Envirostone, Zeolite, Portland cement, diatomaceous earth, NoChar, and Slikwik. Soils are from sampling operations and cleanup of waste line leaks. [272, 283]		
Inner Packaging	Two 5-mil plastic liner bags could still be present in the 55-gallon drum, but they are typically closed by folding, not by twisting and taping. Waste with the potential to tear the plastic bag, such as broken glass, was placed first in a metal container with a slip lid, taped closed, and then placed into the plastic bag. Large or heavy items may have been framed in wood to prevent shifting. [272]		
Drum Preparation	Either two 5-mil plastic liner bags, twist and taped closed with yellow vinyl tape, or one 90-/125-mil rigid polyethylene liner with lid. Waste could also be packaged in 30-gallon drums, or into in-line 30-gallon drums attached to a glovebox in the waste management room. The 30-gallon drums were then packaged into 55-gallon drums. [272]		
Box Preparation	Waste items may be packaged in corrugated metal boxes (CMBs). The CMB may have a 3/4-inch plywood liner with a horsetailed closed bagout bag containing bagged out waste. The waste items are not individually wrapped. [274, 283] Individual 55-gallon drums may be overpacked into SWBs. SWBs may include 55-gallon drums of LA-007, LA-009, or LA-010 IDCs. [283]		
Primary Waste Parameter(s)	Plastic (waste materials), other inorganic materials, cellulosics, iron-based metals [272, 283]		
Special Notes	Prohibited items identified are containers greater than 4 liters, containerized liquids, light ballasts and aerosol cans. [272, 283] Lead shielding is often used. [272, 282, 283] If <50% by volume debris, recommend an IDC change and notify the AMWTP offsite waste coordinator. IDC UN-000 may be used. This waste is from LANL WSP LA-MHD03.001. [283]		

Heterogeneous Debris Waste	*Unknown/Other Debris*	*S5000*
S5400	**LA-009**	**Heterogeneous Debris from the TA-21 DP West Facility**
WIPP Status	WIPP Candidate	
Waste Description	Combustible and non-combustible waste. Examples of the combustible waste includes paper, rags, plastic, rubber, wood-based HEPA filters, filter media, cardboard, wipes, paper towels, stoppers, tubing, valves, bottles, containers, plastic sheeting, cotton gloves, cotton coveralls, paper coveralls, plastic booties, tape, lab coats, nylon booties, polyvinyl chloride (PVC) plastic, Plexiglass, air hoses, leather gloves, latex gloves, personal protective clothing (PPE), hoods, hand tools, ladders, and wood. Examples of the non-combustible waste includes small tools, equipment, cans, pumps and motors, process equipment, gloveboxes, glovebox windows, holdup tanks, mills, lathes, presses, metal ductwork, composite HEPA filters, metal pipes, graphite, concrete, dust, fiberglass filter media, brass items, steel and titanium items, glassware, ladders, filter frames, valves, tantalum molds, anode heels, casting skulls, shielding, foil, lead solder, and crucibles. [272, 284]	
Inner Packaging	The packaging configurations for the waste are expected to vary from overpacked 30-gallon drums to multiple layers of inner plastic bags and/or metal cans. [272]	
Drum Preparation	Either two 5-mil plastic liner bags, twist and taped closed with yellow vinyl tape, or one 90-/125-mil rigid polyethylene liner with lid. Waste could also be packaged in 15- or 30-gallon drums and overpacked into 55- and/or 85-gallon drums. [272]	
Box Preparation	Waste items may be packaged in corrugated metal boxes (CMB). The CMB may have a ¾ inch plywood liner with a horsetailed closed bagout bag containing bagged out waste. The waste items are not individually wrapped. [274, 284] Individual 55-gallon drums may be overpacked into SWBs. SWBs may include 55-gallon drums of LA-007, LA-008, or LA-010 IDCs. [284]	
Primary Waste Parameter(s)	Iron-based metals, other metals, cellulosics, rubber [272]	
Special Notes	Prohibited items identified are containers greater than 4 liters, containerized liquids, light ballasts, and aerosol cans. [272, 284] Lead shielding is often used. [272, 284] If <50% by volume debris, recommend an IDC change and notify the AMWTP offsite waste coordinator. IDC UN-000 may be used. This waste is from LANL WSP LA-MHD04.001. [284]	

Combustibles	*Unknown/Other Organic Debris*	*S5000*
S5390	**BL-010**	**Rags, Gloves, Poly**
WIPP Status	MLLW – Not a WIPP Candidate	
Waste Description	Rags, gloves, paper, plastic, rubber, filters and wood debris from Bettis Labs. Waste may also contain any amount of noncombustible debris items but may only contain <50% by volume S3000 material (e.g., solidified or absorbed liquids), carbowax, oil-contaminated Absorbal, floor sweepings, grinding sludge and binary powder; solidified chemical waste (homogeneous solids including neutralized chemical solution mixed with Absorbal or carbowax), packaged in plastic wrapped bottles and/or cans. [50, 81]	
Inner Packaging	Small items wrapped in plastic and placed in 3-1/4 × 7-inch steel can with threaded lid/juice can with rolled seam lid. Large items wrapped in plastic, placed in 4-3/8 × 20- to 24-inch steel can, and then wrapped in plastic.[3]	
Drum Preparation	Rigid liner	
Primary Waste Parameter(s)	Cellulosics, plastic (waste materials), rubber	
Special Notes	15 to 80 cans were stacked in the drum rigid liner. Variations in packaging configurations have been observed by RTR (e.g., 6M packaging). S3000 material may be present at >50%. If >50% by volume homogeneous solids (e.g., absorbed oil), recommend an IDC change. IDC UN-00A may be used if type of homogeneous solids is unknown.	

Heterogeneous Debris Waste		*Unknown/Other Debris*	*S5000*
S5400	**LA-010**	**Heterogeneous Debris Waste from TA-50**	
WIPP Status	WIPP Candidate		
Waste Description	Mixed heterogeneous combustible and non-combustible debris. Combustible waste materials including cardboard, cellulosics, cheesecloth, cloth, filter media/paper, Kimwipes, leaded gloves, mops, paper, plastics (e.g., bags, bottles, piping, wrap), PPE, prefilters, rags, rubber (e.g., gaskets), sandpaper, Styrofoam, tape, wood, and wood-based HEPA filters. Non-combustible waste materials including aluminum foil, cans (e.g., tin), equipment and instruments (e.g., balance, pump, scale, smoke detector, vacuum gage), flanges, glass (e.g., jar, vials windows), graphite, lead (e.g., bricks, shielding), quartz tubes, platinum metal, piping, scrap metal, size reduced gloveboxes and tanks, sources, stainless-steel, tools, and valves. The waste may also include small amounts of homogeneous solids such as absorbent/solidification material (e.g., Portland cement, vermiculite, Waste Lock 770 [polymer-based absorbent]) used to solidify liquids (e.g., grease, oils), oxides (e.g., source material), and sand. [272, 285]		
Inner Packaging	Waste placed inside the drums was typically contained in a single plastic bag that was twisted then taped closed. Up to two liner bags could still be present, but were typically closed by folding, not by twisting and taping. Waste with the potential to tear the plastic bag, such as broken glass, is first placed in a metal container with a lid and then placed into the plastic bag.[272]		
Drum Preparation	Up to two 5- to 12-mil plastic liner bags closed with tape or one 90-/125-mil rigid polyethylene liner with lid. [272]		
Box Preparation	Waste items may be packaged in corrugated metal boxes (CMB) and placed in a TDOP. The CMB may have a ¾-inch plywood liner with a bagout bag containing bagged out waste and closed with a horsetail. The waste items are not individually wrapped. The CMB is re-sized (corners cut off) to fit into the TDOP. [274, 285] Individual 55-gallon drums may be overpacked into SWBs. SWBs may include 55-gallon drums of LA-007, LA-008, and LA-009 IDCs. [285]		
Primary Waste Parameter(s)	Iron-based metals, other metals, aluminum-based metals [272, 285]		
Special Notes	Potential prohibited items are containers greater than 4 liters, containerized liquids and aerosol cans. Potential for light ballasts. [272, 285] Lead shielding is often used. [272, 285] If <50% by volume debris, recommend an IDC change and notify the AMWTP offsite waste coordinator. IDC UN-000 may be used. This waste is from LANL WSP LA-MHD09.001. [285]		

Combustibles	*Organic Debris*		*S5000*
S5300	**RF-010**	**Paper and Rags**	
WIPP Status	WIPP Candidate		
Waste Description	IDC RF-010 existed prior to IDCs RF-330 and RF-336 and as the predecessor IDC it is expected to include cloth, paper, and wood products including items such as wipes, towels, rags, coveralls, booties, gloves, HEPA filter frames, and lumber. Waste was packaged as a dry waste. Waste may also contain any amount of plastic, and rubber but may only contain <50% by volume metal and other inorganic material debris items (e.g., concrete, cement, leaded-glovebox gloves, surgeon's gloves, lead tape, and glass and metal items such as Raschig rings, nails, cans, vials, bottles, lead sheeting, bolts, pipe, welding rods, batteries, tools, and wire). Absorbent may have been added to waste.[81]		
Inner Packaging	O-ring bag/poly bag or poly bag/poly bag. Rigid liners are not expected in any of the drums packaged prior to 1972.		
Drum Preparation	Poly drum bag/poly drum bag or O-ring bag Drums may be lead-lined (waste from americium recovery line).		
Primary Waste Parameter(s)	Cellulosics, plastic (waste materials), rubber		
Special Notes	IDC RF-010 was used prior to June 1971 and appears to have been replaced by IDCs RF-330 and RF-336.[99] Containers with this IDC may be found in Cells 1 and 2, Pad 1. An IDC change to RF-330, RF-336, or RF-337 is not recommended because the waste was generated prior to the existence of these IDCs. Drums may contain compacted waste.		

Uncategorized Metal[98]		*Unknown/Other Solids*	*S9000*[98]
S9000[98]	**BL-012**	**Miscellaneous Sources**	
WIPP Status	Waste Not Currently Included in AMWTP Scope for WIPP Disposal		
Waste Description	The waste consists of two ^{226}Ra sources.[81]		
Inner Packaging	2R pipe Lead shielding within pipe		
Drum Preparation	Celotex discs are used to center the 2R pipe		
Primary Waste Parameter(s)	*Not currently summarized*		
Special Notes	S9000 (Unknown/Other Solids) and WMCG Uncategorized Metal were assigned to IN-W360 in the 1995 Transuranic Waste Baseline Inventory Report (TWBIR).[98] The final WMC will be determined when sufficient AK or RTR/VE data is available. Available RTR describes this waste as containing celotex plastic discs for centering the 2R source pipe containing impenetrable lead-lined containers.		

Uncategorized Metal [98]		*Unknown/Other Solids*	*S9000* [98]
S9000 [98]	**BL-015**	**Neutron Sources**	
WIPP Status	Waste Not Currently Included in AMWTP Scope for WIPP Disposal		
Waste Description	The waste consists of two ^{238}Pu-Be sources and one ^{238}Pu-Li source. [81]		
Inner Packaging	Each source is double encapsulated in stainless steel/1/2-inch steel pipe/2R pipe		
Drum Preparation	Celotex discs and annular segments of polyethylene are used to center the 2R pipe		
Primary Waste Parameter(s)	*Not currently summarized*		
Special Notes	Variations in packaging configurations have been observed by RTR (e.g., cement capsule around the source pipe). S9000 (Unknown/Other Solids) and WMCG Uncategorized Metal were assigned to IN-W359 in 1995 TWBIR. [98] The final WMC will be determined when sufficient AK or RTR/VE data is available. Available RTR indicates the packaging is impenetrable and prevents description of the waste.		

Heterogeneous Debris Waste		*Predominantly Inorganic Debris*	*S5000*
S5420	**BL-020**	**Non-compressible, Non-combustible**	
WIPP Status	MLLW – Not a WIPP Candidate		
Waste Description	Debris waste including Absolute filters, metal equipment/tools, metal scrap (bars, sheets), furnace brick, and glovebox equipment. Waste may also contain any amount of combustibles or <50% by volume S3000 material (e.g., solidified chemical waste[homogeneous solids including neutralized chemical solution mixed with Absorbal or carbowax]) from laboratory analysis packaged in plastic wrapped bottles and/or cans; solidified or absorbed liquids, carbowax, oil-contaminated Absorbal, floor sweepings, grinding sludge and binary powder. [50, 81]		
Inner Packaging	Small items wrapped in plastic and placed in 3-1/4 × 7-inch steel can with threaded lid/juice can with rolled seam lid Large items wrapped in plastic, placed in 4-3/8 × 20- to 24-inch steel can, and then wrapped in plastic Larger items wrapped in plastic and directly loaded into drum All items single or double-bagged prior to placing in drum Absorbed liquids packaged in bottles that were placed in metal cans and wrapped with plastic.[3]		
Drum Preparation	Rigid liner		
Primary Waste Parameter(s)	Iron-based metals/alloys, other metals, other inorganic materials		
Special Notes	Based on RTR results, waste may contain sharp objects. [242] Variations in packaging configurations have been observed by RTR (e.g., 6M packaging). S3000 material may be present at >50%. If >50% by volume homogeneous solids (e.g., solidified chemical waste), recommend an IDC change. IDC UN-00A may be used if type of homogeneous solids is unknown.		

Combustibles	*Organic Debris*		*S5000*
S5300	**RF-020**	**Wood & Benelex**	
WIPP Status	WIPP Candidate		
Waste Description	IDC RF-020 existed prior to IDCs RF-464 and RF-970 and as the predecessor IDC it is expected to include wood products (e.g., lumber, plywood, filter frames, ladders, and Benelex). Benelex is densely laminated wood product which was usually coated with fire retardant paint or may have lead shielding attached. Benelex came in 2-inch thick sheets. Waste may also contain <50% by volume plastic, rubber, metal, glass, and other inorganic material debris items (wipes, nails, sheetrock, etc.).		
Inner Packaging	Poly bag/poly bag Waste may be placed directly into waste drum or box.		
Drum Preparation	Poly drum bag/poly drum bag A cardboard liner may be present in some drums. Rigid liners are not expected in any of the drums packaged prior to 1972.		
Primary Waste Parameter(s)	Cellulosics (e.g., Benelex, wood), other metal (e.g., lead shielding)		
Special Notes	IDC RF-020 was used prior to June 1971 and appears to have been replaced by IDCs RF-464 and RF-970. [99] Containers with this IDC may be found in Cells 1 and 2, Pad 1. Benelex is a cellulosic material and may have lead shielding attached and some of the hinges and handles may still be attached. The lead shielding was usually bolted to the Benelex so look for the bolts and nuts. An IDC change to RF-464 or RF-970 is not recommended because the waste was generated prior to the existence of these IDCs.		

Lead/Cadmium Metal		*Debris Waste*	*S5000*
S5000	**ID-021**	**Radioactive Mixed Lead Waste**	
WIPP Status	WIPP Candidate		
Waste Description	Radioactive lead formerly used as shielding but NOT lead used as shielding in a waste drum. Waste includes primarily lead bricks or lead sheets and may also include small amounts of combustible and non-combustible debris. Waste may also contain <50% by volume homogeneous solids. [273]		
Inner Packaging	No information is currently available about inner packaging.		
Drum Preparation	Waste is not expected in drums. [273]		
Bin Preparation	Waste was packaged in wood and metal crates (e.g., SWBs/bins). A liner may or may not have been used. [273]		
Primary Waste Parameter(s)	Other metals (lead)		
Special Notes	TBD		

Solidified Inorganics		*Unknown/Other Inorganic Sludges*	*S3000*
S3129	**BL-030**	**Solidified Grinding Sludge**	
WIPP Status	Waste not currently included in AMWTP scope for WIPP disposal		
Waste Description	Inorganic sludge comprised of abrasive materials from grinding wheels dried to either powder or cake form. Waste may also contain <50% by volume debris waste (e.g., filters and rags) [50, 81]		
Inner Packaging	Packaged in 3-1/4 inch × 7-inch steel can and then wrapped in plastic. [3]		
Drum Preparation	Rigid liner 17C or 6M drums		
Primary Waste Parameter(s)	Other inorganic materials		
Special Notes	Variations in packaging configurations have been observed by RTR (e.g., 6M packaging). If >50% by volume debris, recommend an IDC change.		

Combustibles	*Organic Debris*		*S5000*
S5300	**RF-030**	**Plastic**	
WIPP Status	WIPP Candidate		
Waste Description	IDC RF-030 existed prior to IDC RF-337 and as the predecessor IDC it is expected to include plastic and non-leaded rubber waste debris items in the form of empty bottles, piping, tubing, glovebox windows, bags, tape, sheeting, and protective clothing (e.g., supplied air suits, surgeon's gloves, booties, respirator masks, parts and cartridges, and non-leaded glovebox gloves), etc. Types of plastic include polyethylene, polypropylene, PVC, Teflon, tygon, and plexiglas. Types of rubber include latex, neoprene, hypalon and viton. Waste may also contain any amounts of cloth, paper and wood products including items such as wipes and paper. [57] Waste may only contain <50% by volume glass and metal debris items (e.g., metal respirator cartridges, raschig rings, nails, cans, vials, bottles, lead sheeting, bolts, pipe, welding rods, batteries, tools, and wire).		
Inner Packaging	O-ring bag/poly bag or poly bag/poly bag Rigid liners are not expected in any of the drums packaged prior to 1972.		
Drum Preparation	Poly drum bag/poly drum bag A limited number of drums are lead-lined.		
Primary Waste Parameter(s)	Plastic (waste materials), cellulosics, rubber		
Special Notes	IDC RF-030 was used prior to June 1971 and appears to have been replaced by IDC RF-337.[99] Containers with this IDC may be found in Cells 1 and 2, Pad 1. An IDC change to RF-330, RF-336 or RF-337 is not recommended because the waste was generated prior to the existence of these IDCs.		

Lead/Cadmium Metal [98]	*Unknown/Other Solids*	*S9000*
S9000	**BL-040**	**Solid Binary Scrap Powder**
WIPP Status	Waste not currently included in AMWTP scope for WIPP disposal	
Waste Description	Solid binary scrap (ceramic based UO_2 and ThO_2) in form of powder, pellets, or rods. Waste also contains fuel rods constructed of zirconium tubes filled with fuel pellets. Waste may also contain combustible waste. [50, 81]	
Inner Packaging	Packaged in 3-1/4 inch × 7 inch or 4-3/8 inch × 20 to 24 inch steel cans, and then wrapped in plastic (3 cans per drum). Fuel rods were packaged in 5-inch diameter steel pipe (10–20 rods per drum) [3]	
Drum Preparation	6M shipping drums (either 55- or 100-gallon capacity) Lead shielding	
Primary Waste Parameter(s)	Other inorganic materials	
Special Notes	Up to 3 cans per drum. Variations in packaging configurations have been observed by RTR (e.g., 6M packaging). S5112 (metal debris with lead) and WMCG lead/cadmium metal were assigned to IN-W260 in 1995 TWBIR, but the WMC was conservatively changed to S9000. The final SCG/WMC will be determined when sufficient AK or RTR/VE data is available. RTR has reported that drum contents appear to be a pipe overpack containing small metal cans with scrap metal, metal fines, and sludge. The small metal cans are packaged in larger metal cans. Pipe overpack is estimated to be 3 gallons in volume. Pipe overpack appears to be packaged in fiberboard.	

Combustibles	*Leaded Gloves/Aprons*	*S5000*
S5311	**RF-040**	**Rubber**
WIPP Status	WIPP Candidate	
Waste Description	IDC RF-040 existed prior to IDC RF-463 and as the predecessor IDC it is expected to include primarily neoprene/Hypalon leaded glovebox gloves and leaded aprons.	
Inner Packaging	O-ring bag/poly bag	
Drum Preparation	Rigid liner/poly drum bag/poly drum bag Some drums may be lead-lined. Rigid liners are not expected in any of the drums packaged prior to 1972.	
Primary Waste Parameter(s)	Gloves and aprons are 100% rubber – assigned per CBFO (WAP Table B3-1)	
Special Notes	IDC RF-040 was used prior to June 1971 and appears to have been replaced by IDC RF-463. [99] Containers with this IDC may be found in Cells 1 and 2, Pad 1. Be careful of liner bag wash out and wash out of less dense items. Aprons are identifiable by shoulder harness rings. Based on results of RTR examination of similar waste, this waste may contain prohibited liquids. An IDC change to RF-339 or RF-463 is not recommended, because the waste was generated prior to the existence of these IDCs.	

Solidified Inorganics		*Inorganic Particulate Absorbents*	*S3000*
S3113	**BL-050**	**Solidified Solutions**	
WIPP Status	Waste not currently included in AMWTP scope for WIPP disposal		
Waste Description	This waste consists of plutonium and neptunium-bearing salts each separately solidified in a Pyrex beaker. [81]		
Inner Packaging	Beaker/PVC sleeve/wide mouth plastic jar/stainless steel can/PVC sleeve/metal can/2R pipe		
Drum Preparation	Celotex discs are used to center the 2R pipe		
Primary Waste Parameter(s)	Iron-based metals, plastic (waste materials), other inorganic materials		
Special Notes	The two cans were placed inside a 2R pipe which was centered in a 55-gallon 17C drum. Variations in packaging configurations have been observed by RTR (e.g., 6M packaging).		

Uncategorized Metal		*Metal Debris with Lead*	*S5000*
S5112	**RF-050**	**Metal Scrap**	
WIPP Status	WIPP Candidate		
Waste Description	IDC RF-050 existed prior to IDC RF-480 and as the predecessor IDC it is expected to include iron, stainless steel, carbon steel, aluminum, copper, brass, and bronze metal scrap in the form of sheet, ducting, piping, tubing, angle iron, mechanical parts, electrical parts, wire, cable, foil, empty metal produce and paint cans, etc. Waste may also contain any amounts of lead (e.g., lead shielding, lead sheeting, scrap lead) but may only contain <50% by volume cellulosics, plastic, rubber, glass, and other inorganic material debris items (e.g., items made of glass, concrete). [73]		
Inner Packaging	Poly bag/poly bag or O-ring bag/poly bag. Waste may be in Fiberpaks.		
Drum Preparation	Rigid liner (after 1971)/poly drum bag/poly drum bag. Some drums may be lead-lined (e.g., waste from americium lines). Rigid liners are not expected in any of the drums packaged prior to 1972.		
Primary Waste Parameter(s)	Iron-based metals/alloys, aluminum-based metals/alloys, other metals (e.g., lead, copper, brass, bronze) **NOTE**: *When the type of metal cannot be determined, use iron-based metals/alloys waste parameter.* [14]		
Special Notes	IDC RF-050 was used prior to June 1971 and appears to have been replaced by IDC RF-480. [99] Containers with this IDC may be found in Cells 1 and 2, Pad 1. Metal waste may contain a wide variety of manufactured items which may contain PCB items (such as ballasts, capacitors, or transformers). [49] Lead cell batteries with liquids in excess of WAP limits or whose contents cannot be verified are prohibited from disposal at the WIPP facility. [38] An IDC change to RF-320, RF-321, RF-480, or RF-481 is not recommended because the waste was generated prior to the existence of these IDCs.		

Inorganic Non-Metal		*Glass Debris*	*S5000*
S5122	**RF-060**	**Glass**	
WIPP Status	WIPP Candidate		
Waste Description	IDC RF-060 existed prior to IDC RF-440 and as the predecessor IDC it is expected to include glass items such as bottles, vials, light bulbs, labware, glovebox windows, lead-taped sample vials, crushed and ground glass. The materials may be composed of glass, ceramic, leaded glass or quartz. Absorbent material (Oil-Dri®) may be present. Waste may also contain <50% by volume cellulosic, plastic, rubber and metal debris items (e.g., glovebox window frames and gaskets, cans, nuts, bolts, tools, bottles, leaded rubber gloves and aprons, cardboard, wood, filters, light ballasts). [72]		
Inner Packaging	½ or 1-gallon poly bottles/poly bag/poly bag or O-ring bag/poly bag or poly bag/poly bag Waste may be packaged in Fiberpaks. Waste (light bulbs, fluorescent tubes) may be placed directly into container.		
Drum Preparation	Poly drum bag/poly drum bag Cardboard liner drum may be present. A small number of drums are lead-lined. Rigid liners are not expected in any of the drums packaged prior to 1972.		
Primary Waste Parameter(s)	Other inorganic materials **NOTE:** *If leaded glass, then use a 50/50 ratio for the lead (other metals) and glass (other inorganic materials)*		
Special Notes	IDC RF-060 was used prior to June 1971 and appears to have been replaced by IDC RF-440.[99] Containers with this IDC may be found in Cells 1 and 2, Pad 1. Waste may have light ballasts (which may contain PCBs). Leaded glass appears to become denser as rotated because a larger cross section of glass must be penetrated. Waste may also contain lead-taped glass bottles and vials. [77] An IDC change to RF-440 is not recommended because the waste was generated prior to the existence of this IDC.		

Graphite	*Graphite Debris*		*S5000*
S5126	**RF-070**	**Graphite**	
WIPP Status	WIPP Candidate		
Waste Description	IDC RF-070 existed prior to IDC RF-300 and as the predecessor IDC it is expected to include graphite molds, cores, spacers, and electrodes from plutonium casting operations. The graphite may include broken or whole molds, small pieces, or fines. Waste may also contain <50% by volume cellulosic, plastic, rubber, glass, and metal materials (e.g., paper, cardboard, elastic bands, tubing, surgeon's gloves, thermocouples, bolts, tools).		
Inner Packaging	Poly bottle/O-ring bag/poly bag O-ring bag/poly bag Some drums may include graphite packaged in Kraft tubes [61, 91]		
Drum Preparation	Poly drum bag/poly drum bag or poly drum bag/O-ring bag Rigid liners are not expected in any of the drums packaged prior to 1972.		
Primary Waste Parameter(s)	Other inorganic materials		
Special Notes	IDC RF-070 was used prior to June 1971 and appears to have been replaced by IDC RF-300. [99] Containers with this IDC may be found in Cells 1 and 2, Pad 1. Waste pieces may be in poly bottles. The O-ring bags will be lined with a fiberboard liner and may include a fiberboard disc. An IDC change to RF-300, RF-301, RF-303, RF-310 or RF-312 is not recommended because the waste was generated prior to the existence of these IDCs.		

Uncategorized Metal	*Unknown/Other Solids*		*S9000*
S9000	**RF-080**	**Equipment**	
WIPP Status	WIPP Candidate		
Waste Description	IDC RF-080 existed prior to IDC RF-980 and as the predecessor IDC it is expected to include unknown equipment, complete information is not available.		
Inner Packaging	May contain poly bags.		
Drum Preparation	May contain poly bags Rigid liners are not expected in any of the drums packaged prior to 1972.		
Primary Waste Parameter(s)	*Not currently available.*		
Special Notes	IDC RF-080 was used prior to June 1971 and appears to have been replaced by IDC RF-980. [99] Containers with this IDC may be found in Cells 1 and 2, Pad 1. An IDC change to RF-980 is not recommended because the waste was generated prior to the existence of this IDC. S9000 (Unknown/Other Solids) was conservatively assigned to this waste. The final WMC will be determined when sufficient AK or RTR/VE data is available.		

Uncategorized Metal [98]		*Unknown/Other Special Waste*	*X7000*
X7900	**BL-081**	**Metal Samples Fissile**	
WIPP Status	Waste not currently included in AMWTP scope for WIPP disposal		
Waste Description	The waste consists of 17 drums of unirradiated fuel-bearing metallographic mounts. The mount material is identified as Quickmont Powder and liquid, which are non-hazardous materials per the Resource Conservation and Recovery Act (RCRA). [81]		
Inner Packaging	Metal "juice can" with roll-seam lid 43 to 91 cans per drum		
Drum Preparation	Rigid liner		
Primary Waste Parameter(s)	*Not currently summarized*		
Special Notes	Variations in packaging configurations have been observed by RTR (e.g., 6M packaging). S3100 (Inorganic Homogeneous Solids) and WMCG Uncategorized Metal were assigned to IN-W372 in the 1995 TWBIR. [98] The SCG and WMC were changed to X7000 (Special Waste) and X7900 (Unknown/Other Special Waste), respectively. The final WMC will be determined when sufficient AK or RTR/VE data is available.		

Soils	*Soil/Debris*		*S4000*
S4200	**RF-090**	**Dirt**	
WIPP Status	WIPP Candidate		
Waste Description	Dry dirt or soil generated during operations such as cleanup of spills or leaks. Waste could be damp and may include evaporator pond sludge. Waste may also contain <50% by volume combustible debris items (e.g., coveralls, gloves). [3]		
Inner Packaging	Soil may be single or double bagged in small poly bags or directly loaded into the drum		
Drum Preparation	Rigid liner (after1971)/poly drum bag/poly drum bag/fiberboard liner Up to 2 quarts Oil-Dri® added on top of outer sealed poly drum bag.		
Primary Waste Parameter(s)	Soils/gravel		
Special Notes	Based on RTR results, waste may contain aerosol cans, prohibited liquids, sealed containers >4 liters, sharp objects, or impenetrable objects/waste. [242] WMC S4200/IDC RF-090 can ONLY be used if >50% by volume soil or gravel (natural geologic material ≤2.36 inches [60 millimeters]). If >50% by volume debris, including rocks (natural geologic materials >2.36 inches [60 millimeters]), recommend change to IDC RF-960. If indeterminate, recommend change to IDC UN-00A or UN-00C and an AK evaluation will be performed. IDC RF-090 was replaced by RF-990 in early 1972. [3, 97, 152]		

Solidified Organics		*Biological Sludges*	*S3000*
S3221	**RF-095**	**Sewer Sludge**	
WIPP Status	WIPP Candidate		
Waste Description	Organic sludge from cleaning the stabilization ponds at the Building 995 sewage treatment plant. If sludge was wet, cement was added in layers as the sludge was placed into drum.		
Inner Packaging	Direct loaded into the waste drum		
Drum Preparation	Rigid liner (after 1971)/poly drum bag/O-ring bag Portland cement added to top and bottom in inner drum bag.		
Primary Waste Parameter(s)	Organic matrix		
Special Notes	Based on RTR results of drums of other RF bulk or direct sludge, this waste may contain prohibited liquids on top of the sludge, within the drum bag, or between the rigid liner and drum. Visual examination of this bulk or direct loaded sludge waste packaged in 55-, 83-, or 85-gallon drums would not provide additional relevant information to the RTR examination. May have cement in drum, rigid liner, poly drum bag. IDC RF-095 was replaced by IDC RF-995 in early 1972 and RFP discontinued shipping sewer sludge to INL in 1976. [3, 97, 152]		

Heterogeneous Debris Waste		*Heterogeneous Debris*	*S5000*
S5400	**AE-100**	**General Plant Waste**	
WIPP Status	Potential WIPP Candidate		
Waste Description	Waste contains, but is not limited to: combustible and non-combustible items such as: aluminum, stainless steel, and iron items; cans, lids, trays, wire, targets, disks, gauges, pipe, fittings, valves, bolts, clips, screws, tubing, tools (e.g., forceps, vise, tweezers, scissors, pliers, razor knives, and saw blades), screens, planchettes, foil, columns, racks, unistruts, pressure cookers, copper, lead, brass items; pipe, tubing, fittings, sheeting, lead shot, boxes, glass and ceramic items; bottles, jars, lab ware (e.g., pipettes, vials, flasks, beakers, syringes, and test tubes), crucibles (magnesium and beryllium oxide), leaded glass panes, and insulation (fiber glass and asbestos), paper, cardboard, cloth, wood items; rags, towels, filters, cartons, boxes, PPE (e.g., suits, booties, gloves, filter cartridges, tape), lab coats, gloves (leather), gloves, tubing, O-rings, stoppers, cords, gaskets, bottles, metal lids, PPE (e.g., gloves, filter cartridges, tape), bags, sheeting, epoxy sample/source mounts, and rope (nylon), plastic and glass bottles, glass, small tools, balances, and empty metal cans. Waste may also contain <50% by volume absorbed organic waste packaged in 1-gallon poly bottles. [247, 249, 255, 256, 257, 258, 261]		
Inner Packaging	Poly bags/4-inch diameter by 8-inch high aluminum cans or ½ and 1-gallon metal cans or poly bottles placed in 3- or 5-gallon paint cans with crimp on lids. [3, 247, 249, 253, 254, 255, 256, 257, 258, 261]		
Drum Preparation	Some containers may include Type-3 drum liners.		
Bin Preparation	Waste in bins is usually segregated (e.g., combustible versus non-combustible). Waste may be packaged in 55-gallon drums placed in MIII bins or waste may be packaged in 3-, 5-, or 30-gallon containers and placed in MIII bins. Individual 55-gallon drums or smaller containers may be other AE IDCs. [117, 247, 249, 261]		
Primary Waste Parameter(s)	Cellulosics, rubber, plastics (waste materials), iron-based metals/alloys, other inorganic materials		
Special Notes	Waste may contain gas cylinders and aerosol cans. Sealed cylinders or vessels may contain reactive material. Piping and laboratory lines with stop valves or manifold systems may be pressurized or contain liquids. Unused reagent grade bottles of liquids and other containers with liquids have been identified. After 1974 containers with combustible waste are labeled with green triangle. [3] Prior to 1981, liquids absorbed on vermiculite were packaged in 1-gallon poly bottles which were placed in 3-gallon paint can with vermiculite filling the void space. Several 3-gallon paint cans were placed into a 55-gallon drum. Absorbed liquids may also be packaged in 5-gallon containers. [3] RTR has also identified bins containing 55-gallon drums and other drums/buckets of various sizes of bulk or direct loaded homogeneous solids (e.g., AE-102, no inner containers). [117] If >50% by volume homogeneous solids, recommend an IDC change to AE-102. IDC AE-102 and AE-105 that are >50% debris based on RTR will be changed to AE-100. See AE-102 and AE-105 for packaging and other information. Based on observations during retrieval, MIII bins of AE-100 may be painted white.		

Heterogeneous Debris Waste		*Heterogeneous Debris*	*S5000*
S5400	**AE-101**	**Cut Up Gloveboxes**	
WIPP Status	Potential WIPP Candidate		
Waste Description	Glove box sections (1/4 to 1-1/4-inch-thick stainless steel or aluminum), equipment that may have been size reduced (e.g., lathes, milling machines, rolling mills, furnaces), and associated tools, glassware, piping, filters, hydraulic cylinders (8 and 10-inches in diameter), gas cylinders (<1 foot in diameter and <4 feet long) and cinderblocks from decontamination and decommissioning (D&D) operations and other combustible and non-combustible items such as: aluminum, stainless steel, and iron items; cans, lids, trays, wire, targets, disks, gauges, pipe, fittings, valves, bolts, clips, screws, tubing, tools (e.g., forceps, vise, tweezers, scissors, pliers, razor knives, and saw blades), screens, planchettes, foil, columns, racks, unistruts, pressure cookers; copper, lead, brass items; pipe, tubing, fittings, sheeting, lead shot; boxes, glass and ceramic items; bottles, jars, lab ware (e.g., pipettes, vials, flasks, beakers, syringes and test tubes), crucibles (magnesium and beryllium oxide), leaded glass panes, and insulation (fiber glass and asbestos); paper, cardboard, cloth, wood items; rags, towels, filters, cartons, boxes, PPE (e.g., suits and booties), lab coats, gloves (leather), gloves, tubing, O-rings, stoppers, cords, gaskets, bottles, metal lids, PPE (e.g., gloves, filter cartridges, tape), bags, sheeting, epoxy sample/source mounts, and rope (nylon), plastic and glass bottles, glass, small tools, balances, and empty metal cans. Waste may also contain <50% by volume absorbed organic liquids in poly bottles. [3, 247, 249, 261]		
Inner Packaging	Miscellaneous items in heat sealed poly bags, glovebox windows are double wrapped in polyethylene, glovebox sections wrapped in one or more layers of polyethylene, large metal items may or may not be plastic bagged. [3, 247, 249, 253, 254, 255, 256, 257, 258, 261]		
Bin Preparation	MIII bins with half or full-size poly liners or wooden boxes. [3, 247, 249] Several pounds of vermiculite were added to bins. [247, 249, 261]		
Primary Waste Parameter(s)	Other inorganic materials (e.g., glass), iron-based metals/alloys (e.g., glovebox)		
Special Notes	The gas cylinders were reported to have been vented and the valves left in the open position prior to packaging. [247, 249] Lubricating, cooling, and functional fluids (oils) were drained from the waste items and included in poly bottles as absorbed liquids. [247, 249] The waste contains similar material inputs as AE-100 wastes. [247, 249, 255, 256, 257, 258]		

Solidified Organics		*Unknown/Other Homogeneous Solids*	*S3000*
S3900	**AE-102**	**Absorbed Liquids**	
WIPP Status	Potential WIPP Candidate		
Waste Description	Various organic and inorganic absorbed liquids and homogeneous solids from multiple ANL-E buildings. Wastes include but are not limited to: precipitates, oils, ether-based scintillation fluids, decontamination liquids, ion exchange resins, evaporator residues and may include absorbed photographic solutions and other solid or semisolid materials. Liquid wastes were neutralized with the addition of NaOH, and absorbed onto vermiculite or Oil-Dri. The waste may contain Portland cement and may also contain <50% by volume heterogeneous debris waste. [247, 249, 255, 256, 257, 258, 261]		
Inner Packaging	None (direct loaded)[249, 250, 251, 252, 253, 261]		
Drum Preparation	90 mil polyethylene liner.		
Bin Preparation	Drums were unloaded from bins upon receipt from ANL-E; however, 15 bins of AE-102 waste are identified in WTS. Individual 55-gallon drums or smaller containers in the bins may be other AE IDCs.		
Primary Waste Parameter(s)	Organic matrix, inorganic matrix, other inorganic materials (see Special Notes)		
Special Notes	Prior to the mid 1980s, content Code 102 (currently IDC AE-102) was used for all ANL-E homogeneous solids waste).[256, 257, 258] Organic matrix may be conservatively assigned to this waste. For AE-102 that is >50% debris, recommend AE-100. Based on observations during retrieval, MIII bins of AE-102 may be painted red.		

Heterogeneous Debris Waste		*Heterogeneous Debris*	*S5000*
S5400	**AE-104**	**Alpha Hot Cell Waste**	
WIPP Status	Potential WIPP Candidate		
Waste Description	Wastes include, but are not limited to: items made of polyvinyl chloride, polypropylene, polyethylene, polyurethane, neoprene, Bakelite, butyl rubber O-rings, Q-tips, lab equipment, tools, fixtures, glassware, pipe, tubing fittings, fasteners, insulating firebrick, small lead weights, ferrous and non-ferrous metal scraps, electric motors, slave manipulators, aluminum, stainless steel, and iron items; cans, lids, trays, wire, targets, disks, gauges, pipe, fittings, valves, bolts, clips, screws, tubing, tools (e.g., forceps, vise, tweezers, scissors, pliers, razor knives, and saw blades), screens, planchettes, foil, columns, racks, unistruts, pressure cookers; copper, lead, brass items; pipe, tubing, fittings, sheeting, lead shot, boxes; glass and ceramic items; bottles, jars, lab ware (e.g., pipettes, vials, flasks, beakers, syringes and test tubes), crucibles (magnesium and beryllium oxide), leaded glass panes, and insulation (fiber glass and asbestos); paper, cardboard, cloth, wood items; rags, towels, filters, cartons, boxes, PPE (e.g., suits and booties), lab coats, gloves (leather), gloves, tubing, O-rings, stoppers, cords, gaskets, bottles, metal lids, PPE (e.g., gloves, filter cartridges, tape), bags, sheeting, epoxy sample/source mounts, and rope (nylon), plastic and glass bottles, glass, small tools, balances, and empty metal cans.[247, 249, 261]		
Inner Packaging	Waste may be loose, plastic-bagged, or packaged in 4 × 10-inch portal cans or one-gallon paint cans prior to placing waste in 7 1/2-gallon steel buckets bagged in 20-mil PVC heat sealed bag which was placed into 30-gallon drum (2 buckets per drum).[247, 249, 253, 254, 255, 256, 257, 258, 261]		
Drum Preparation	Some 30-gallon drums were loaded directly into lead shielded cask.[247] Drums were unloaded from casks at INEL prior to storage. Other drums were overpacked into MIII bins. Individual 55-gallon drums or smaller containers in the bins may be other AE IDCs.		
Bin Preparation	MIII-bins containing drums were loaded into lead shielded casks. Bins were unloaded from casks at INEL prior to storage.[247, 249]		
Primary Waste Parameter(s)	*Not currently summarized*		
Special Notes	This waste was initially identified as potentially remote handled. Some metal or glass containers were compacted prior to packaging.[247, 249] Waste in bins was usually segregated (combustible versus non-combustible).[247, 249] The waste contains similar material inputs as AE-100 wastes.[247, 249, 255, 256, 257, 258]		

Solidified Inorganics		*Unknown/Other Homogeneous Solids*	*S3000*
S3900	**AE-105**	**Empty Bottles and Absorbent**	
WIPP Status	Potential WIPP Candidate		
Waste Description	Waste consists of empty polyethylene and glass bottles used at ANL-E to transport liquid waste (AE-102) for treatment. The waste may also contain <50% by volume heterogeneous debris waste. [247, 255, 256, 257, 258, 261]		
Inner Packaging	None [247, 250, 251, 252, 253, 261]		
Drum Preparation	90 mil liner Void space in drum was filled with vermiculite		
Bin Preparation	Drums were unloaded from bins upon receipt from ANL-E; however, 1 bin of AE-105 waste is identified in WTS. Individual 55-gallon drums or smaller containers in the bins may be other AE IDCs.		
Primary Waste Parameter(s)	Other inorganic materials, plastics (waste materials)		
Special Notes	Bottles may have lids and those >4 liters should be considered to be sealed containers. At one point the ANL-E content Code 105 description reflected glass. For AE-105 that is >50% debris, recommend AE-100.		

Heterogeneous Debris Waste [98]		*Heterogeneous Debris*	*S5000* [98]
S5400 [98]	**AE-106**	**Special Source Material (UNK)**	
WIPP Status	Potential WIPP Candidate		
Waste Description	Waste contains, but is not limited to: combustible and non-combustible items such as: aluminum, stainless steel, and iron items; cans, lids, trays, wire, targets, disks, gauges, pipe, fittings, valves, bolts, clips, screws, tubing, tools (e.g., forceps, vise, tweezers, scissors, pliers, razor knives, and saw blades), screens, planchettes, foil, columns, racks, unistruts, pressure cookers; copper, lead, brass items; pipe, tubing, fittings, sheeting, lead shot, boxes; glass and ceramic items; bottles, jars, lab ware (e.g., pipettes, vials, flasks, beakers, syringes, and test tubes), crucibles (magnesium and beryllium oxide), leaded glass panes, and insulation (fiber glass and asbestos); paper, cardboard, cloth, wood items; rags, towels, filters, cartons, boxes, PPE (e.g., suits and booties), lab coats, gloves (leather), gloves, tubing, O-rings, stoppers, cords, gaskets, metal lids, PPE (e.g., gloves, filter cartridges, tape), bags, sheeting, epoxy sample/source mounts, and rope (nylon), plastic and glass bottles, glass; small tools, balances, and empty metal cans. Waste may also contain <50% by volume absorbed organic waste packaged in 1-gallon poly bottles.[255, 256, 257, 258, 261]		
Inner Packaging	Poly bags/4-inch-diameter by 8-inch-high aluminum cans or 1/2- and 1-gallon metal cans or poly bottles placed in 3- or 5-gallon paint cans with crimp on lids [3, 253, 254, 255, 256, 257, 258, 261]		
Drum Preparation	No drum liners identified		
Primary Waste Parameter(s)	Cellulosics, rubber, plastics (waste materials), iron-based metals/alloys, other inorganic materials		
Special Notes	S9000 (unknown/other solids) and WMCG heterogeneous debris waste were assigned to IN-W350 in 1995 TWBIR. [98] The waste contains similar material inputs as AE-100 wastes. [249, 255, 256, 257, 258]		

Heterogeneous Debris Waste [98]		*Heterogeneous Debris*	*S5000* [98]
S5400 [98]	**AE-107**	**RH waste**	
WIPP Status	Potential WIPP Candidate		
Waste Description	Waste contains, but is not limited to: combustible and non-combustible items such as: aluminum, stainless steel, and iron items; cans, lids, trays, wire, targets, disks, gauges, pipe, fittings, valves, bolts, clips, screws, tubing, tools (e.g., forceps, vise, tweezers, scissors, pliers, razor knives, and saw blades), screens, planchettes, foil, columns, racks, unistruts, pressure cookers, copper, lead, brass items; pipe, tubing, fittings, sheeting, shot, boxes, glass and ceramic items; bottles, jars, lab ware (e.g., pipettes, vials, flasks, beakers, syringes and test tubes), crucibles (magnesium and beryllium oxide), leaded glass panes, and insulation (fiber glass and asbestos), paper, cardboard, cloth, wood items; rags, towels, filters, cartons, boxes, PPE (e.g., suits, booties, gloves, filter cartridges, tape), lab coats, gloves (leather), gloves, tubing, O-rings, stoppers, cords, gaskets, bottles, metal lids, bags, sheeting, epoxy sample/source mounts, and rope (nylon), plastic and glass bottles, glass, small tools, balances, and empty metal cans. Waste may also contain <50% by volume absorbed organic waste packaged in 1-gallon poly bottles. [255, 256, 257, 258, 261]		
Inner Packaging	Poly bags/4-inch-diameter by 8-inch-high aluminum cans or 1/2- and 1-gallon metal cans or poly bottles placed in 3- or 5-gallon paint cans with crimp on lids. [3, 253, 254, 255, 256, 257, 258, 261]		
Drum Preparation	No drum liners identified		
Primary Waste Parameter(s)	Cellulosics, rubber, plastics (waste materials), iron-based metals/alloys, other inorganic materials		
Special Notes	S9000 (unknown/other solids) and WMCG heterogeneous debris waste were assigned to IN-W349 in 1995 TWBIR. [98] The waste contains similar material inputs as AE-100 wastes. [255, 256, 257, 258]		

Heterogeneous Debris Waste		*Heterogeneous Debris*	*S5000*
S5400	**AE-110**	**Research Generated Waste**	
WIPP Status	Potential WIPP Candidate		
Waste Description	Waste contains, but is not limited to: combustible and non-combustible items such as: aluminum, stainless steel, and iron items; cans, lids, trays, wire, targets, disks, gauges, pipe, fittings, valves, bolts, clips, screws, tubing, tools (e.g., forceps, vise, tweezers, scissors, pliers, razor knives, and saw blades), screens, planchettes, foil, columns, racks, unistruts, pressure cookers, copper, lead, brass items; pipe, tubing, fittings, sheeting, shot, boxes, glass and ceramic items; bottles, jars, lab ware (e.g., pipettes, vials, flasks, beakers, syringes and test tubes), crucibles (magnesium and beryllium oxide), leaded glass panes, and insulation (fiber glass and asbestos), paper, cardboard, cloth, wood items; rags, towels, filters, cartons, boxes, PPE (e.g., suits, booties, gloves, filter cartridges, tape), lab coats, gloves (leather), gloves, tubing, O-rings, stoppers, cords, gaskets, bottles, metal lids, bags, sheeting, epoxy sample/source mounts, and rope (nylon), plastic and glass bottles, glass, small tools, balances, and empty metal cans. Waste may also contain <50% by volume absorbed organic waste packaged in 1-gallon poly bottles. [247, 255, 256, 257, 258, 261]		
Inner Packaging	Poly bags/4-inch diameter by 8-inch high aluminum cans or ½ and 1-gallon metal cans or poly bottles placed in 3- or 5-gallon paint cans with crimp on lids [3, 254, 253, 255, 256, 257, 258, 261]		
Drum Preparation	No drum liners identified		
Bin Preparation	Waste in bins is usually segregated (e.g., combustible versus non-combustible). Waste may be packaged in 55-gallon drums placed in MIII bins or waste may be packaged in 3-gallon, 5-gallon or 30-gallon containers and placed in MIII bins. Individual 55-gallon drums or smaller containers in the bins may be other AE IDCs. [117]		
Primary Waste Parameter(s)	Cellulosics, rubber, plastics (waste materials), iron-based metals/alloys, other inorganic materials		
Special Notes	The waste was first identified in the mid to late 1980s and early 1990s during RWMC Solid Waste Examination Pilot Plant (SWEPP) operations. The waste prior to this time was identified as content Code 100 (or AE-100 IDC). It contains similar material inputs as AE-100 wastes. [247, 255, 256, 257, 258]		

Solidified Organics		*Unknown/Other Homogeneous Solids*	*S3000*
S3900	**AE-111**	**Solidified Wet Sludge**	
WIPP Status	Potential WIPP Candidate		
Waste Description	Various organic and inorganic absorbed liquids and homogeneous solids from multiple ANL-E buildings. Wastes include but are not limited to: precipitates, oils, ether-based scintillation fluids, decontamination liquids, ion exchange resins, evaporator residues and may include absorbed photographic solutions and other solid or semisolid materials. Liquid wastes were neutralized with the addition of NaOH, and absorbed onto vermiculite or Oil-Dri. The waste may contain Portland cement and may also contain <50% by volume heterogeneous debris waste. [247, 253, 255, 256, 257, 258, 261]		
Inner Packaging	Direct loaded or in one-gallon containers. [247, 250, 251, 252, 261]		
Drum Preparation	90 mil polyethylene liner.		
Bin Preparation	Drums were unloaded from bins upon receipt from ANL-E; however, bins of AE-111 waste are identified in WTS. Individual 55-gallon drums or smaller containers in the bin may be other AE IDCs.		
Primary Waste Parameter(s)	Organic matrix, inorganic matrix, other inorganic materials. (see Special Notes)		
Special Notes	The waste was first identified in the mid to late 1980s and early 1990s during RWMC SWEPP operations. The waste prior to this time was identified as content Code 102 (or AE-102 IDC). It is contains similar material inputs as AE-102 wastes. [247, 255, 256, 257, 258] Organic Matrix may be conservatively assigned to this waste.		

Heterogeneous Debris Waste		*Unknown/Other Heterogeneous Debris*	*S5000*
S5490	**BX-111**	**Miscellaneous Source Material**	
WIPP Status	Waste not currently included in AMWTP scope for WIPP disposal		
Waste Description	*Not currently summarized*		
Inner Packaging	*Not currently summarized*		
Drum Preparation	*Not currently summarized*		
Primary Waste Parameter(s)	*Not currently summarized*		
Special Notes	TBD		

Heterogeneous Debris Waste		*Heterogeneous Debris*	*S5000*
S5400	**AE-120**	**D and D Waste Comp. and Comb. Solids**	
WIPP Status	Potential WIPP Candidate		
Waste Description	Waste contains, but is not limited to: combustible and non-combustible items such as: aluminum, stainless steel, and iron items; cans, lids, trays, wire, targets, disks, gauges, pipe, fittings, valves, bolts, clips, screws, tubing, tools (e.g., forceps, vise, tweezers, scissors, pliers, razor knives, and saw blades), screens, planchettes, foil, columns, racks, unistruts, pressure cookers, copper, lead, brass items; pipe, tubing, fittings, sheeting, shot, boxes, glass and ceramic items; bottles, jars, lab ware (e.g., pipettes, vials, flasks, beakers, syringes and test tubes), crucibles (magnesium and beryllium oxide), leaded glass panes, and insulation (fiber glass and asbestos), paper, cardboard, cloth, wood items; rags, towels, filters, cartons, boxes, PPE (e.g., suits, booties, gloves, filter cartridges, tape), lab coats, gloves (leather), gloves, tubing, O-rings, stoppers, cords, gaskets, bottles, metal lids, PPE (e.g., gloves, filter cartridges, tape), bags, sheeting, epoxy sample/source mounts, and rope (nylon), plastic and glass bottles, glass, small tools, balances, and empty metal cans. Waste may also contain <50% by volume absorbed organic waste packaged in 1-gallon poly bottles. [247, 255, 256, 257, 258, 261]		
Inner Packaging	Poly bags/4-inch-diameter by 8-inch-high aluminum cans or 1/2- and 1-gallon metal cans or Poly bottles placed in 3- or 5-gallon paint cans with crimp on lids [3, 253, 254, 255, 256, 257, 258, 261]		
Drum Preparation	No drum liners identified		
Primary Waste Parameter(s)	Cellulosics, rubber, plastics (waste materials), iron-based metals/alloys, other inorganic materials		
Special Notes	The waste was first identified in the mid to late 1980s and early 1990s during RWMC SWEPP operations. The waste prior to this time was identified as content Code 100 (or AE-100 IDC). It contains similar material inputs as AE-100 wastes. [247, 255, 256, 257, 258]		

Solidified Organics		*Unknown/Other Homogeneous Solids*	*S3000*
S3900	**AE-121**	**TRU Organic Solid Waste**	
WIPP Status	Potential WIPP Candidate		
Waste Description	Various organic and inorganic absorbed liquids and homogeneous solids from multiple ANL-E buildings. Wastes include but are not limited to: precipitates, oils, ether-based scintillation fluids, decontamination liquids, ion exchange resins, evaporator residues and may include absorbed photographic solutions and other solid or semisolid materials. Liquid wastes were neutralized with the addition of NaOH, and absorbed onto vermiculite or oil-Dri. The waste may contain Portland cement and may also contain <50% by volume heterogeneous debris waste. [247, 255, 256, 257, 258, 261]		
Inner Packaging	Direct loaded or in one-gallon containers. [247, 250, 251, 252, 253, 261]		
Drum Preparation	90 mil polyethylene liner.		
Bin Preparation	Drums were unloaded from bins upon receipt from ANL-E; however, bins of AE-121 waste are identified in WTS. Individual 55-gallon drums or smaller containers in the bins may be other AE IDCs.		
Primary Waste Parameter(s)	Organic matrix, inorganic matrix, other inorganic materials. (see Special Notes)		
Special Notes	The waste was first identified in the mid to late 1980s and early 1990s during RWMC SWEPP operations. The waste prior to this time was identified as content Code 102 (or AE-102 IDC). It contains similar material inputs as AE-102 wastes. [247, 255, 256, 257, 258] Organic Matrix may be conservatively assigned to this waste.		

Heterogeneous Debris Waste		*Debris Waste*	*S5000*
S5000	**MX-142**	**Scrap Processing Equipment**	
WIPP Status	Waste not currently included in AMWTP scope for WIPP disposal		
Waste Description	*Not currently summarized*		
Inner Packaging	*Not currently summarized*		
Drum Preparation	*Not currently summarized*		
Primary Waste Parameter(s)	*Not currently summarized*		
Special Notes	TBD		

Heterogeneous Debris Waste		*Unknown/Other Heterogeneous Debris Waste*	*S5000*
S5490	**AW-150**	**Laboratory Waste**	
WIPP Status	WIPP Candidate		
Waste Description	Laboratory debris waste generated at ANL-W may include laboratory equipment (e.g., fission counters, sonic sifter), electric saw, welder controllers, tool boxes, hand tools (e.g., metal files, wire brushes, hacksaw and blades), grinder motors, pumps, fluxwire, thermocouple wire, other wire (aluminum, steel, and other metal), miscellaneous laboratory ware (e.g., beakers, polyethylene bottles), cans containing crushed glass or combustibles, foil (aluminum, tin, plutonium, or tantalum), sponges, pipette tips, paint cans (e.g., one pint or one gallon), paper, polyvinyl chloride (PVC) bags, polyethylene bags and materials, ceramics, PPE (e.g., Tyvek coveralls, anti-Cs), cloth rags, terri-towels, glove port rings, nylon gloveport blanks, O-rings, gloves (e.g., neoprene, rubber, nitrile, leather), leaded gloves, thermal gloves, crucibles, filters with wood and metal frames, HEPA filters, pre-filters, filter media, ion exchange resins, Pu-Be sources, Pu standards, irradiated GE caps, wood, rubber tubing, piping and miscellaneous metal pieces, asbestos floor tile and insulation, sample planchettes, aluminum capsules, uranium pellets, actinide neutron sources, a radium needle, small vials of fuel, metal containers of experimental fuel capsules, a plastic glovebox, centrifuges, tools, and experimental fuel capsules. Waste may also contain <50% by volume analytical samples and pellets dissolved and absorbed on Oil-Dri [3, 98, 264]		
Inner Packaging	Prior to 1978, plastic-lined containers After 1977, plastic, glass, or metal containers (that may be wrapped in plastic) were placed in lined containers		
Drum Preparation	One or two drum bags Oil-Dri® added to top of drum bags		
Box Preparation	WTS identifies boxes of AW-150 waste as "Box, HFEFS insert 7 cubic foot (RH)."		
Primary Waste Parameter(s)	Other metals, other inorganic materials, plastics (waste materials), rubber, cellulosics **NOTE:** *Any amount of other debris waste parameters may be present.*		
Special Notes	If >50% by volume homogeneous solids (e.g., absorbent), recommend change to IDC UN-00A.		

Heterogeneous Debris Waste		*Unknown/Other Heterogeneous Debris Waste*	*S5000*
S5490	**IC-150**	**Laboratory Waste**	
WIPP Status	WIPP candidate		
Waste Information	See IDC ID-150		
Special Notes	In WTS, the generator area code IC is used to identify INTEC as the generator. IC-150 is identical to ID-150 and no IDC change is recommended. IDCs IC-150 and ID-150 were associated with INTEC/RWMC laboratory operations and may contain or may have been derived from unused hydrofluoric acid product (HWN U134). U134 waste with any observable liquid is prohibited from disposal at WIPP. [273]		

Heterogeneous Debris Waste		*Unknown/Other Heterogeneous Debris Waste*	*S5000*
S5490	**ID-150**	**Laboratory Waste**	
WIPP Status	WIPP candidate		
Waste Description	Waste includes, but is not limited to: paper (Kimwipes, blotter paper), PPE, wood, plastic, (plastic bags, sheeting, rad bags), cloth (mop heads, anti-C clothing, rags, Terri towels), metal (piping, ducting, file cabinets, bolt cutters, metal sheeting, process equipment, cones, cans, disks, tools), flux wands, Mark-IV needle, lead, lab ware (jars, pipettes, vials, flasks, beakers, syringes and test tubes), uncemented resin, broken and unbroken glassware (bottles, jars, vials, flasks, beakers, test tubes), radioactive sources (oxides of plutonium, americium, and ^{235}U) in aluminum or stainless steel capsules, gloves, and funnels. Oil-Dri®, vermiculite, diatomaceous earth, or other absorbent may have been added to absorb moisture. Waste may also contain < 50% by volume unused samples, dissolved samples absorbed on Oil-Dri® or other absorbent, or analytical samples, and may contain organics from laboratory operations. [3, 98, 273]		
Inner Packaging	Waste may be double bagged or it may be loosely packaged in a drum bag along with <50 % by volume homogeneous solid waste or soil/gravel/cobble/sand. Waste may include plastic (poly jugs, 20-gallon carboys [vented]), glass, or metal (1-gallon, 30-gallon drums [vented]) internal containers. [273]		
Drum Preparation	A drum liner (e.g., 90-mil high-density polyethylene) may be present. [273]		
Box Preparation	Odd sized crates, SWBs and FRPs may or may not include smaller containers (e.g., 5-30 plastic/poly bottles/carboys, glass and metal containers or 30-gallon inner containers). An SWB/FRP liner may be present. [273]		
Primary Waste Parameter(s)	Other metals, other inorganic materials, plastics (waste materials), rubber, cellulosics		
Special Notes	Based on RTR results, waste may contain impenetrable objects. [242] In WTS, the generator area code IC is used to identify INTEC as the generator. IC-150 is identical to ID-150 and no IDC change is recommended. IDCs IC-150 and ID-150 were associated with INTEC/RWMC laboratory operations and contain waste associated with unused hydrofluoric acid product (HWN U134). U134 waste with any observable liquid is prohibited from disposal at WIPP. [273]		

Heterogeneous Debris Waste		*Unknown/Other Heterogeneous Debris Waste*	*S5000*
S5490	**IF-150**	**Laboratory Waste**	
WIPP Status	WIPP Candidate		
Waste Description	Waste includes, but is not limited to: paper (Kimwipes, blotter paper), PPE, wood, plastic, (plastic bags, sheeting, rad bags), cloth (mop heads, anti-C clothing, rags, Terri towels), metal (piping, ducting, file cabinets, bolt cutters, metal sheeting, process equipment, cones, cans, disks, tools), flux wands, Mark-IV needle, lead, lab ware (jars, pipettes, vials, flasks, beakers, syringes and test tubes), uncemented resin, broken and unbroken glassware (bottles, jars, vials, flasks, beakers, test tubes), radioactive sources (oxides of plutonium, americium, and ^{235}U) in aluminum or stainless steel capsules, gloves, and funnels. Oil-Dri®, vermiculite, diatomaceous earth, or other absorbent may have been added to absorb moisture. Waste may also contain <50% by volume unused samples, dissolved samples absorbed on Oil-Dri® or other absorbent, or analytical samples, and may contain organics from laboratory operations. [3, 98, 273]		
Inner Packaging	Waste may be double-bagged or it may be loosely packaged in a drum bag along with <50 % by volume homogeneous solid waste or soil/gravel/cobble/sand. Waste may include plastic (poly jugs, 20-gallon carboys [vented]), glass or metal (1-gallon, 30-gallon drums [vented]) internal containers. [273]		
Drum Preparation	A drum liner (e.g., 90-mil high-density polyethylene) may be present. [273]		
Box Preparation	Odd sized crates, SWBs and FRPs may or may not include smaller containers (e.g., 5-, 30-gallon plastic/poly bottles/carboys, glass and metal containers or 30-gallon inner containers). An SWB/FRP liner may be present. [273]		
Primary Waste Parameter(s)	Other metals, other inorganic materials, plastics (waste materials), rubber, cellulosics		
Special Notes	Based on RTR results, waste may contain impenetrable objects. [242] IDC IF-150 was not associated with INTEC/RWMC laboratory operations. [273]		

Solidified Organics		*Unknown/Other Homogeneous Solids*	*S3000*
S3900	**IC-151**	**Solidified Fuel Sludge**	
WIPP Status	Waste not currently included in AMWTP scope for WIPP disposal		
Waste Information	TBD		
Special Notes	All this waste was generated at INTEC and is remote handled (RH)-TRU.		

Uncategorized Metal		*Debris Waste*	*S5000*
S5000	**IC-152**	**Pu Neutron Sources**	
WIPP Status	Waste not currently included in AMWTP scope for WIPP disposal		
Waste Information	See IDC ID-152		
Special Notes	Most of this waste has been identified as RH-TRU and returned to RWMC. However, IC-152 waste was sent to CWI as part of the Contact-Handled Returns Project and the CH portion of the waste is expected to return as one or more drums of IC-604. In WTS, the generator area codes IC, IN, and IT are used to identify the generator instead of the generator site code (i.e., IDCs IC-152, IN-152, or IT-152 are used instead of IDC ID-152 in WTS). No IDC change is recommended.		

Uncategorized Metal		*Debris Waste*	*S5000*
S5000	**ID-152**	**Pu Neutron Sources**	
WIPP Status	Waste not currently included in AMWTP scope for WIPP disposal		
Waste Description	Waste includes Pu-Be neutron sources, Pu standard, Pu foil, tools, and non-combustible waste. Waste from TAN may be encapsulated in cement. [3]		
Inner Packaging	Package date 1975: ^{239}Pu-Be sources from TAN were placed in carbon steel pipe, which was centered in drum. Cement was added, filling annular space of the drum and encapsulating the pipe containing the sources. [3, 97] Package date 1978: None specified for ^{238}Pu-Be sources from NRF. [3, 97]		
Drum Preparation	Plastic liners were used. [3] Drums packaged in 1978 were 6M 55-gallon drums. [3, 97]		
Bin Preparation	INTEC waste was packaged in a bin. [97]		
Primary Waste Parameter(s)	Other metals, other inorganic materials (e.g., cement)		
Special Notes	Most of this waste has been identified as RH-TRU and returned to RWMC. 15-gallon drums are potentially sealed containers >4 liters. Information on closure of the 15-gallon drums is not provided. In WTS, the generator area codes IC, IN, and IT are used to identify the generator instead of the generator site code (i.e., IDCs IC-152, IN-152, or IT-152 are used instead of IDC ID-152 in WTS). No IDC change is recommended.		

Uncategorized Metal		*Debris Waste*	*S5000*
S5000	**IN-152**	**Pu Neutron Sources**	
WIPP Status	Waste not currently included in AMWTP scope for WIPP disposal		
Waste Information	See IDC ID-152		
Special Notes	Most of this waste has been identified as RH-TRU and returned to RWMC. However, IN-152 waste was sent to CWI as part of the Contact-handled Returns Project and the CH portion of the waste is expected to return as one or more drums of IC-604. In WTS, the generator area codes IC, IN, and IT are used to identify the generator instead of the generator site code (i.e., IDCs IC-152, IN-152, or IT-152 are used instead of IDC ID-152 in WTS). No IDC change is recommended.		

Uncategorized Metal		*Debris Waste*	*S5000*
S5000	**IT-152**	**Pu Neutron Sources**	
WIPP Status	Waste not currently included in AMWTP scope for WIPP disposal		
Waste Information	See IDC ID-152		
Special Notes	Most of this waste has been identified as RH-TRU and returned to RWMC. In WTS, the generator area codes IC, IN, and IT are used to identify the generator instead of the generator site code (i.e., IDCs IC-152, IN-152, or IT-152 are used instead of IDC ID-152 in WTS). No IDC change is recommended.		

Heterogeneous Debris Waste		*Predominantly Organic Debris*	*S5000*
S5440	**ID-153**	**Combustible Lab Waste**	
WIPP Status	WIPP Candidate		
Waste Description	Waste from NRF contains process equipment, containers, and combustible materials. Waste from other facilities has not been described but is assumed to contain similar materials based on assignment of the same content code. [273]		
Inner Packaging	One or more drum bags. One drum from NRF includes a Pu-Be source in a 2R container placed in a paraffin-filled (used as a moderator) 30-gallon drum inserted into a 55-gallon drum. Wood was used for bracing and shoring the inner drum against the outer. Other 55-gallon drums from NRF containing neutron sources may have been packaged in a similar manner. [273]		
Drum Preparation	The single drum from NRF was unlined. The remaining containers may include a drum liner (e.g., 90-mil high density polyethylene). [273]		
Primary Waste Parameter(s)	Other metals, cellulosics, organic matrix		
Special Notes	Most containers of waste from NRF have been identified as either RH waste or MLLW.		

Uncategorized Metal		*Unknown/Other Inorganic Debris*	*S5000*
S5190	**ID-154**	**Sample Fuel**	
WIPP Status	WIPP Candidate		
Waste Description	Debris waste generated at TRA may include actinide neutron sources, small vials of fuel, and metal containers of fuel capsules. [3, 273]		
Inner Packaging	TRA waste packaged in 1974/1975: Waste was placed in the small cavity left when the 55-gallon drum was filled with cement. This waste may be re-classified as a homogenous solids depending upon the results of RTR/VE. TRA waste packaged in 1978/1979: 1-gallon containers placed inside a 55-gallon drum, with lead shot used for shielding around the 1-gallon containers. Diatomaceous earth was added to the drum for support. Other waste: May be double-bagged or may be loosely packaged in the drum bag. Lead shielding may also be present. [273]		
Drum Preparation	Plastic drum bag. A drum liner may be present. [273]		
Primary Waste Parameter(s)	Other metals, other inorganic materials		
Special Notes	Based on RTR results, waste may contain impenetrable objects. [242] In WTS, the generator area code IR is used to identify the generator as TRA. IR-154 is identical to ID-154 and no IDC change is recommended. [273]		

Uncategorized Metal		*Unknown/Other Inorganic Debris*	*S5000*
S5190	**IR-154**	**Sample Fuel**	
WIPP Status	WIPP Candidate		
Waste Information	See IDC ID-154		
Special Notes	In WTS, the generator area code IR is used to identify the generator as TRA. IR-154 is identical to ID-154 and no IDC change is recommended.		

Heterogeneous Debris Waste		*Debris Waste*	*S5000*
S5000	**ID-155**	**TRU Scrap**	
WIPP Status	WIPP Candidate		
Waste Description	Debris waste generated at TRA may include a plastic glovebox, hydraulic pump, vacuum pumps, centrifuges, tools, and experimental fuel capsules. The plastic glove box was reduced in size as needed to fit the 112-ft^3 plywood box. Debris waste generated at the other facilities is assumed to be similar based on assignment of the same content code. [273]		
Inner Packaging	TRA waste packaged in 1975: No packaging around waste. [273] TRA waste packaged in 1979: Waste was packaged into 1-gallon cans. [273] Other containers and generators: Waste may have been packaged in one or more plastic bags sealed with tape. [273]		
Drum Preparation	One or more plastic bags, sealed with tape. A drum liner may be present. [273]		
Box Preparation	One plastic box liner may be present. [273]		
Primary Waste Parameter(s)	Plastic (waste materials), iron-based metals/alloys, other metals		
Special Notes	Based on RTR results, waste may contain mercury, sealed containers > 4 liters (e.g., sealed 2" pipe), or impenetrable objects. [242] Based on AK, hydraulic pump from TRA may contain oil. [3] In WTS, the generator area code IW is used to identify the generator as RWMC. IW-155 is identical to ID-155 and no IDC change is recommended. [273]		

Heterogeneous Debris Waste		*Debris Waste*	*S5000*
S5000	**IW-155**	**TRU Scrap**	
WIPP Status	WIPP Candidate		
Waste Information	See IDC ID-155		
Special Notes	In WTS, the generator area code IW is used to identify the generator as RWMC. IW-155 is identical to ID-155 and no IDC change is recommended.		

Heterogeneous Debris Waste		*Debris Waste*	*S5000*
S5000	**IC-156**	**Chem Cell Rip-out**	
WIPP Status	WIPP Candidate		
Waste Description	Steel piping, vessels, scaffolding, anti-contamination clothing, concrete, and welding slag. [3, 273]		
Inner Packaging	None or two layers of plastic. [273]		
Box Preparation	Two layers of plastic lining box. Plastic is folded over the waste and taped shut. Diatomaceous earth may have been added on top of the bag before closing. [273]		
Primary Waste Parameter(s)	Iron-based metals/alloys, other metals, cellulosics, other inorganic material		
Special Notes	Debris waste generated at INTEC by D&D of the C and D chemical cells in CPP-601 and 602.		

Heterogeneous Debris Waste		*Unknown/Other Heterogeneous Debris*	*S5000*
S5490	**IA-157**	**Miscellaneous Radionuclide Sources**	
WIPP Status	WIPP Candidate		
Waste Information	See IDC ID-157		
Special Notes	In WTS, the generator area codes IA, IC, IF, IR, IT, and IW are used to identify specific generators. IDCs IA-157, IC-157, IF-157, IR-157, IT 157, and IW-157 are identical to ID-157 and no IDC change is recommended.		

Heterogeneous Debris Waste		*Unknown/Other Heterogeneous Debris*	*S5000*
S5490	**IC-157**	**Miscellaneous Radionuclide Sources**	
WIPP Status	WIPP Candidate		
Waste Information	See IDC ID-157		
Special Notes	In WTS, the generator area codes IA, IC, IF, IR, IT, and IW are used to identify specific generators. IDCs IA-157, IC-157, IF-157, IR-157, IT 157, and IW-157 are identical to ID-157 and no IDC change is recommended.		

Heterogeneous Debris Waste		*Unknown/Other Heterogeneous Debris*	*S5000*
S5490	**ID-157**	**Miscellaneous Radionuclide Sources**	
WIPP Status	WIPP Candidate		
Waste Description	Radionuclide sources (e.g., ^{239}Pu, ^{252}Cf, and ^{241}Am) from calibration units across the INL site.[98, 273]		
Inner Packaging	Lead or metal containers (pigs) or wrapped in lead tape.[273]		
Drum Preparation	Poly drum bag, plastic drum liners may be present.[273] Some drums may have lead shielding.		
Primary Waste Parameter(s)	Iron-based metals/alloys **NOTE:** *Any amount of other debris waste parameters may be present.*		
Special Notes	Based on RTR results, waste may contain mercury, sharp objects, sealed containers > 4 liters, or impenetrable objects.[242] In WTS, the generator area codes IA, IC, IF, IR, IT, and IW are used to identify specific generators. IDCs IA-157, IC-157, IF-157, IR-157, IT 157, and IW-157 are identical to ID-157 and no IDC change is recommended.[273]		

Heterogeneous Debris Waste		*Unknown/Other Heterogeneous Debris*	*S5000*
S5490	**IF-157**	**Miscellaneous Radionuclide Sources**	
WIPP Status	WIPP Candidate		
Waste Information	See IDC ID-157		
Special Notes	In WTS, the generator area codes IA, IC, IF, IR, IT, and IW are used to identify specific generators. IDCs IA-157, IC-157, IF-157, IR-157, IT 157, and IW-157 are identical to ID-157 and no IDC change is recommended.		

Heterogeneous Debris Waste		*Unknown/Other Heterogeneous Debris*	*S5000*
S5490	**IR-157**	**Miscellaneous Radionuclide Sources**	
WIPP Status	WIPP Candidate		
Waste Information	See IDC ID-157		
Special Notes	In WTS, the generator area codes IA, IC, IF, IR, IT, and IW are used to identify specific generators. IDCs IA-157, IC-157, IF-157, IR-157, IT 157, and IW-157 are identical to ID-157 and no IDC change is recommended.		

Heterogeneous Debris Waste		*Unknown/Other Heterogeneous Debris*	*S5000*
S5490	**IT-157**	**Miscellaneous Radionuclide Sources**	
WIPP Status	WIPP Candidate		
Waste Information	See IDC ID-157		
Special Notes	In WTS, the generator area codes IA, IC, IF, IR, IT, and IW are used to identify specific generators. IDCs IA-157, IC-157, IF-157, IR-157, IT 157, and IW-157 are identical to ID-157 and no IDC change is recommended.		

Heterogeneous Debris Waste		*Unknown/Other Heterogeneous Debris*	*S5000*
S5490	**IW-157**	**Miscellaneous Radionuclide Sources**	
WIPP Status	WIPP Candidate		
Waste Information	See IDC ID-157		
Special Notes	In WTS, the generator area codes IA, IC, IF, IR, IT, and IW are used to identify specific generators. IDCs IA-157, IC-157, IF-157, IR-157, IT 157, and IW-157 are identical to ID-157 and no IDC change is recommended.		

Heterogeneous Debris Waste		*Unknown/Other Heterogeneous Debris*	*S5000*
S5490	**AW-160**	**AL/CL Debris Waste**	
WIPP Status	WIPP Candidate		
Waste Description	Debris waste generated in the Building 752 analytical and casting laboratories (AL and CL) at Materials and Fuels Complex (MFC) (formerly known as ANL-W) may include terri-towels, rags, hand tools (wire brushes, metal files, hacksaws, and blades), equipment (grinder motors, scales), thermocouple wire, gloves (neoprene, nitrile, leaded, and leather), graphite crucibles, small aluminum cans containing glass labware, pipette tips, piping, rubber tubing, poly bags, PVC bags, HEPA filters, O-rings, gloveport rings, and nylon gloveport blanks. Waste may also contain <50% by volume inorganic and organic liquids solidified with absorbent (i.e., Aquaset, Petroset, or diatomaceous earth) packaged in small bottles.[170, 171]		
Inner Packaging	Prior to 1978, plastic-lined containers After 1977, plastic, glass or metal containers (that may be wrapped in plastic) were placed in lined containers		
Drum Preparation	One or two drum bags Oil-Dri® added to top of drum bags		
Primary Waste Parameter(s)	Cellulosics, plastics (waste), iron-based metals/alloys, other inorganic materials **NOTE:** *Any amount of other debris waste parameters may be present.*		
Special Notes	IDC AW-160 was originally assigned to one drum of remote handled-transuranic (RH-TRU) waste from the analytical chemistry and metallography operations in Hot Fuel Examination Facility (HFEF), Building 785. [98] This RH-TRU drum is no longer part of the AMWTP inventory. The IDC AW-160 assignment has been reassigned to the waste described above.		

Heterogeneous Debris Waste		*Unknown/Other Heterogeneous Debris Waste*	*S5000*
S5490	**AW-161**	**ACL Glassware, Paper, Poly, and Misc.**	
WIPP Status	WIPP Candidate		
Waste Description	Debris waste generated during analytical hot-cell analyses in the Analytical Chemistry Laboratory in Building 752 at the ANL-W may include glassware, paper (e.g., tissue, blotting), rags, polyethylene (e.g., sheeting, bottles, beakers), metal hardware (e.g., pump parts, copper tubing, glovebox waste, and unistrut). The waste may also contain <50% by volume aqueous and organic liquids solidified/absorbed on Oil-Dri® [172, 173]		
Inner Packaging	Prior to 1978, plastic-lined containers After 1977, plastic, glass or metal containers (that may be wrapped in plastic) were placed in lined containers		
Drum Preparation	One or two drum bags Oil-Dri® added to top of drum bags		
Primary Waste Parameter(s)	Other inorganic materials, cellulosics, plastics (waste materials), iron-based metals/alloys, other metals (e.g. copper) **NOTE:** *Other debris waste parameters may be present in the waste.*		
Special Notes	If >50% by volume homogeneous solids (e.g., absorbent), recommend change to IDC UN-00A.		

Heterogeneous Debris Waste		*Unknown/Other Heterogeneous Debris*	*S5000*
S5490	**AW-162**	**ANL-W FMF EFL Zr-U-Pu Fuel Cast.**	
WIPP Status	WIPP Candidate		
Waste Description	Debris waste generated in the Fuel Manufacturing Facility (FMF) Experimental Fuels Laboratory (EFL) at the ANL-W may include solid zirconium, uranium, and plutonium fuel casting metal alloy wastes. The waste is a solid with small amounts of glass powder from broken glass molds. The waste may also include molds, crucibles, glassware, paper products, plastics, and filter media. The waste may also contain <50% by volume samples absorbed on Oil-Dri®. [98, 172, 174]		
Inner Packaging	Prior to 1978, plastic-lined containers After 1977, plastic, glass or metal containers (that may be wrapped in plastic) were placed in lined containers		
Drum Preparation	One or two drum bags Oil-Dri® added to top of drum bags		
Primary Waste Parameter(s)	Other metals (e.g., uranium, zirconium), other inorganic materials **NOTE:** *Other debris waste parameters may be present in the waste.*		
Special Notes	If >50% by volume homogeneous solids (e.g., absorbent), recommend change to IDC UN-00A.		

Heterogeneous Debris Waste		*Unknown/Other Heterogeneous Debris*	*S5000*
S5490	**AW-163**	**ANL-W ACL Cold-Line Ab. Liq. and Debris**	
WIPP Status	WIPP Candidate		
Waste Description	Debris waste generated during cold-line sample analysis in the ACL in Building 752 at ANL-W may include hardware (cans, sample containers), glassware, paper (tissue), and polyethylene (bottles, bags, pouches). The waste may also contain <50% by volume liquids absorbed on Oil-Dri®. [98, 172, 175]		
Inner Packaging	Prior to 1978, plastic-lined containers After 1977, plastic, glass or metal containers (that may be wrapped in plastic) were placed in lined containers.		
Drum Preparation	One or two drum bags Oil-Dri® added to top of drum bags		
Primary Waste Parameter(s)	Other inorganic materials, iron-based metals/alloys, plastics (waste materials), cellulosics **NOTE:** *Other debris waste parameters may be present in the waste.*		
Special Notes	If >50% by volume homogeneous solids (e.g., solidified liquids), recommend change to IDC UN-00A.		

Heterogeneous Debris Waste		*Unknown/Other Heterogeneous Debris*	*S5000*
S5490	**AW-164**	**ANL-W HRA/WCA Debris**	
WIPP Status	WIPP Candidate		
Waste Description	Debris waste generated in the Hot Repair Area (HRA) and Waste Characterization Area (WCA) in Building 785 to support various WIPP sampling and characterization activities that supported the WIPP Experimental Test Program (WETP), 3100 m^3 Project, and offsite waste programs may include PPE (Tyvek coveralls, gloves, hoods), cloth rags, terri towels, paper, glass, poly, PVC, rubber, and scrap metal. Waste may also contain <50% by volume brine absorbed on Vermiculite. [176, 177, 178]		
Inner Packaging	Prior to 1978, plastic-lined containers After 1977, plastic, glass or metal containers (that may be wrapped in plastic) were placed in lined containers		
Drum Preparation	One or two drum bags Oil-Dri® added to top of drum bags		
Primary Waste Parameter(s)	Plastics (waste materials), cellulosics, iron-based metals/alloys, rubber. **NOTE**: *Other debris waste parameters may be present in the waste.*		
Special Notes	If >50% by volume homogeneous solids (e.g., solidified liquids or absorbents), recommend change to IDC UN-00A.		

Heterogeneous Debris Waste		*Unknown/Other Heterogeneous Debris*	*S5000*
S5490	**AW-165**	**Ash Stabilization and GGE Debris**	
WIPP Status	WIPP Candidate		
Waste Description	Debris waste generated during the cleanup and disposal of lab equipment and test containers from ash stabilization and gas-generating experiments (GGE) in Building 785 at ANL-W may include test canisters, stainless steel tubing and valves, plastic bagging and sleeving, rubber gloves, rags, and duct tape. Waste may also contain <50% by volume ash solidified with ceramicrete or brine solution absorbed on vermiculite. [179]		
Inner Packaging	Prior to 1978, plastic-lined containers After 1977, plastic, glass or metal containers (that may be wrapped in plastic) were placed in lined containers		
Drum Preparation	One or two drum bags Oil-Dri® added to top of drum bags		
Primary Waste Parameter(s)	Iron-based metals/alloys, plastic (waste materials), rubber, cellulosics		
Special Notes	If >50% by volume homogeneous solids (e.g., solidified liquids), recommend change to IDC UN-00A.		

Heterogeneous Debris Waste		*Unknown/Other Heterogeneous Debris*	*S5000*
S5490	**AW-167**	**MFC CH-TRU Heterogeneous Debris**	
WIPP Status	WIPP Candidate		
Waste Description	Debris waste originally generated in the Building 752 AL and in the Building 704 FMF at MFC (formerly known as ANL-W) may include miscellaneous laboratory equipment and hand tools (e.g., press, electric saw, hacksaw and blades, wire brushes, welder controllers, tool boxes, sonic sifter, profilometer, sample cabinet, metal files, grinder motors, poly reservoirs, pumps, thermocouple wire, copper and steel wire, polishing plates [aluminum, steel, stone and glass], scales, feed material transfer cans), labware (beakers, poly bottles, glass, one-pint cans containing crushed glass or combustibles, aluminum and tin foil, sponges, and pipette tips), various sized paint cans (one-pint to one gallon), paper, PVC bags, poly bags and materials, cloth rags, terri towels, gloveport rings, nylon gloveport blanks, O-rings, neoprene gloves, PPE (e.g., Tyvek coveralls, booties, nitrile and leather gloves, leaded gloves and thermal gloves), small aluminum cans containing laboratory glassware, graphite crucibles, HEPA filters with wood and metal frames, prefilters, filter media and wood, rubber tubing, piping, miscellaneous metal pieces, and asbestos floor tile and insulation. Waste may also contain <50% by volume non-debris (e.g., dissolved fuel samples solidified/absorbed with Aquaset, Petroset, kitty litter or diatomaceous earth) packaged in poly bottles. [164, 165]		
Inner Packaging	2 to 3 layers of bags Some waste may be packaged in cans (1-qt to 2-gallon paint cans).		
Drum Preparation	Drum liner		
Primary Waste Parameter(s)	Iron-based metals/alloys, other inorganic materials (e.g., glass), cellulosics, plastics (waste) **NOTE:** *Any amount of other debris waste parameters may be present.*		
Special Notes	This IDC is assigned to waste received from MFC after 2009 in accordance with AMWTP Profile ID-MFC-S5490. [165] RTR/VE to verify that waste does not have any supercompactor facility prohibited items (e.g., PCB items, prohibited liquids, pressurized containers). If waste contains any prohibited items, notify AMWTP offsite waste coordinator. Three 55-gal drums of leaded gloves were segregated from MFC RH waste during repackaging in building CPP-659 at INTEC and sent to AMWTP as CH waste with this IDC. If waste is <50% by volume debris, recommend IDC UN-00A or UN-00C and notify the AMWTP offsite waste coordinator.		

Uncategorized Metal		*Debris Waste*	*S5000*
S5000	**ID-175**	**DRCT Scrap Metal Waste from TAN**	
WIPP Status	WIPP Candidate		
Waste Description	Waste includes, but is not limited to, pieces of metal fuel assembly skeletons, nozzles, and other miscellaneous metal pieces cleaned from the TAN Hot Shop and Hot Cell after completion of the Dry Rod Consolidation Technology (DRCT) Project. [273]		
Inner Packaging	To be determined by RTR/VE. [273]		
Drum Preparation	To be determined by RTR/VE. [273]		
Primary Waste Parameter(s)	Iron-based metals/alloys, Any amount of other debris waste parameters may be present.		
Special Notes	TBD		

Solidified Organics		*Unknown/Other Homogeneous Solids*	*S3000*
S3900	**SD-176**	**Pre-1980 INL-Exhumed SDA Homogeneous Solids**	
WIPP Status	Potential WIPP Candidate		
Waste Description	This includes containers of >50% homogeneous solids exhumed, generated and/or repackaged during the INL SDA Early Waste Retrieval (EWR) Project and the Initial Drum Retrieval (IDR) Project. The waste includes all loose homogenous solid waste found in boxes, bins, and cargos. Waste may also include <50% by volume debris or soil, either loose or containerized. [121, 122, 123, 124, 286]		
Inner Packaging	*Not currently summarized*		
Drum Configuration	EWR: All exhumed drums were wrapped in at least one layer of plastic. [121, 122, 123, 124] Exhumed drums were 55-gallon or 30-gallon drums. Leaking drums and breached drums were typically overpacked into 83-gallon drums. [121, 122] Loose waste (which may include a mix of debris, solids, and soils) was packaged into 55-gallon drums.[121] This waste may also be compacted in the drum. 55-gallon and 85-gallon drums were typically placed in Tri-Wall containers. The exhumed waste was loaded (directly and indirectly) into MIII bins for transport to the TSA. IDR: Exhumed drums were 55-gallon or 30-gallon drums. The exhumed drums were overpacked into 85-gallon drums, MIII bins, or cargo containers and boxes. Breached or contaminated drums were wrapped in plastic and placed in 85-gallon drum or deposited directly into MIII bin over packs. Rigid liners are not expected in any of the EWR and IDR exhumed drums.		
Tri-Wall Configuration	EWR: A plastic liner was placed in each Tri-Wall prior to loading. Damaged (breached) drums and loose waste were placed into plastic bags and packaged in Tri-Wall cardboard boxes. [123, 124] Tri-Walls may hold up to four 55-gallon drums. Tri-Walls may contain drums, loose waste, or a combination of loose and drummed waste. IDR: Did not use Tri-Walls.		
Box Configuration	EWR: no boxes were used IDR: Two FRP boxes were created to hold ten damaged drums.		
Bin Configuration	EWR: Bins may contain, but are not limited to: • Eight 55-gallon drums **or** • Six 55-gallon drums and two 83-gallon drums or • Two Tri-wall cardboard boxes on a wood pallet [121, 123, 124] Absorbent (~100 pounds) was routinely spread inside the MIII bins. [123, 124] IDR: Same as EWR but no Tri-Walls. IDR MIII bins are not expected to contain loose waste.		
Cargos Configuration	See- IDC-RF-998 and RF-999 Loose waste may accumulate in cargos during storage or retrieval activities.		
Primary Waste Parameter(s)	*Not currently summarized*		
Special Notes	For purposes of characterization of the bins and boxes, RTR can recommend this IDC if the majority of the contents are homogenous solids. Containers in the bins or boxes may be any combination of SD-176, SD-177, and SD-178. Visual examination of this bulk or direct loaded sludge packaged in 55-, 83-, or 85-gallon drums would not provide additional relevant information to the RTR examination. The IDC does not include waste that has undergone RTR and is identified as containing suspect roaster oxide (see RF-751). The EWR and IDR homogeneous solid waste is managed as PCB contaminated waste. Homogeneous solids wastes with an unknown generator status that can be verified as pre-1980 INL SDA exhumed wastes may be assigned this IDC. This IDC does not include containers with contents confirmed as 100% RF-005 salt waste. Evaporator nitrate salt waste may be assigned RF-745.		

Heterogeneous Debris Waste		*Unknown/Other Heterogeneous Debris*	*S5000*
S5490	**SD-177**	**Pre-1980 INL-Exhumed SDA Heterogeneous Debris**	
WIPP Status	WIPP Candidate		
Waste Description	Waste includes intact containers of >50% by volume miscellaneous heterogeneous debris generated as a result of INL SDA exhumations. This includes debris exhumed, generated and/or repackaged during the EWR Project and the IDR Project. The waste includes all loose debris waste found in boxes, bins, and cargos. Waste may also include <50% by volume homogeneous solids or soil, either loose or containerized. [121, 122, 123, 124, 286]		
Inner Packaging	*Not currently summarized*		
Drum Configuration	EWR: • All exhumed drums were wrapped in at least one layer of plastic. [121, 122, 123, 124] • Exhumed drums were 55-gallon or 30-gallon drums. • Leaking drums and breached drums were typically overpacked into 83-gallon drums. [121, 122] • Loose waste (which may include a mix of debris, solids, and soils) was packaged into 55-gallon drums. [121] This waste may also be compacted in the drum. The exhumed waste was loaded (directly and indirectly) into MIII bins for transport to the TSA. IDR: • Exhumed drums were 55-gallon or 30-gallon drums. The exhumed drums were overpacked into 85-gallon drums, MIII bins, cargo containers or boxes. • Breached or contaminated drums were wrapped in plastic and placed in 85-gallon drum or deposited directly into MIII bin over packs. Rigid liners are not expected in any of the exhumed drums.		
Tri-Wall Configuration	EWR: • A plastic liner was placed in each Tri-Wall prior to loading. • Damaged (breached) drums and loose waste were placed into plastic bags and packaged in Tri-Wall cardboard boxes. [123, 124] Tri-Walls may hold up to four 55-gallon drums. Tri-Walls may contain drums, loose waste, or a combination of loose and drummed waste. IDR: Did not use Tri-Walls.		
Bin Configuration	EWR: Bins may contain, but are not limited to: • Eight 55-gallon drums **or** • Six 55-gallon drums and two 83-gallon drums or • Two Tri-wall cardboard boxes on a wood pallet. [121, 123, 124] IDR: Same as EWR but no Tri-Walls. • IDR MIII bins are not expected to contain loose waste. Absorbent (~100 pounds) was routinely spread inside the MIII bins. [123, 124]		
Cargos Configuration	See- IDC-RF-998 and RF-999 Loose waste may accumulate in cargos during storage or retrieval activities.		
Primary Waste Parameter(s)	*Not currently summarized*		
Special Notes	For purposes of characterization of the bins and boxes, RTR can recommend this IDC if the majority of the contents are heterogeneous debris. Containers in the bins or boxes may be any combination of SD-176, SD-177, and SD-178. Based on RTR results, waste may contain sealed containers >4 liters or impenetrable objects.[242] Debris wastes associated with an unknown generator status that can be verified as pre-1980 INL SDA exhumed wastes may be assigned this IDC. The IDC does not include waste that has undergone RTR and is identified as containing suspect roaster oxide (See RF-751). If a bin or box contains loose sludge or soil, containers of sludge, or containers with >50% soil, then generate an NCR on container for PCBs.		

Soils		*Soil*	*S4000*
S4200	**SD-178**	**Pre-1980 INL-Exhumed SDA Soil**	
WIPP Status	Potential WIPP Candidate		
Waste Description	This waste includes containers of >50% soils exhumed, generated and/or repackaged during the EWR Project and the IDR Project. The exhumed waste includes all loose soil waste found in boxes, bins and cargos. Waste may also include <50% by volume debris or homogeneous solids, either loose or containerized. [121, 122, 123, 124, 286]		
Inner Packaging	*Not currently summarized*		
Drum Configuration	EWR: All exhumed drums were wrapped in at least one layer of plastic. [121, 122, 123, 124] Exhumed drums were 55-gallon or 30-gallon drums. Leaking drums retrieved in 1976 and breached drums exhumed in 1978 were typically overpacked into 83-gallon drums. [121, 122] Loose waste (which may include a mix of debris, solids, and soils) was packaged into 55-gallon drums.[121] This waste may also be compacted in the drum. 55-gallon and 85-gallon drums were typically placed in Tri-Wall containers but may be directly or indirectly loaded in an MIII bin for transport to the TSA. IDR: Exhumed drums were 55-gallon or 30-gallon drums. Breached or contaminated drums were wrapped in plastic and placed in 85-gallon drum or deposited directly into MIII bin over packs. All drums were overpacked into 85-gallon drums, MIII bins, or cargo containers. Rigid liners are not expected in any of the exhumed drums.		
Tri-Wall Configuration	EWR: A plastic liner was placed in each Tri-Wall prior to loading. Damaged (breached) drums and loose waste were placed into plastic bags and packaged in Tri-Wall cardboard boxes. [123, 124] Tri-Walls may hold up to four 55-gallon drums. Tri-Walls may contain drums, loose waste, or a combination of loose and drummed waste. IDR: Did not use Tri-Walls.		
Bin Configuration	EWR: Bins may contain, but are not limited to: • Eight 55-gallon drums **or** • Six 55-gallon drums and two 83-gallon drums **or** • Two Tri-wall cardboard boxes on a wood pallet [121, 123, 124] IDR: Same as EWR but no Tri-Walls. • IDR MIII bins are not expected to contain loose waste. Absorbent (~100 pounds) was routinely spread inside the MIII bins. [123, 124]		
Cargos Configuration	See- IDC-RF-998 and RF-999 Loose waste may accumulate in cargos during storage or retrieval activities.		
Primary Waste Parameter(s)	*Not currently summarized*		
Special Notes	For purposes of characterization of the bins, RTR can recommend this IDC if the majority of the contents are soils. Containers in the bins or boxes may be any combination of SD-176, SD-177, and SD-178. Soil wastes associated with an unknown generator status that can be verified as pre-1980 INL SDA exhumed wastes may be assigned this IDC. The IDC does not include waste that has undergone RTR and is identified as containing suspect roaster oxide (See RF-751). Soils from the EWR project may contain a soil binder (Turco Lab 1368-33-1) or asphalt that was applied in 1974-1976 at the time the soil was retrieved from the pits and trenches. [121, 122] The EWR and IDR soil waste is managed as PCB contaminated waste.		

N/A	*N/A*		*N/A*
N/A	**IW-179**	**Pre-1980 SDA Waste Retrieval Bins**	
WIPP Status	N/A – Overpack Container		
Waste Description	See IDC SD-179. This IDC is superseded by SD-179.		
Bin Configuration	See IDC SD-179.		
Primary Waste Parameter(s)	N/A – overpack container. See IDC SD-179.		
Special Notes	See SD-179.		

N/A	*N/A*		*N/A*
N/A	**SD-179**	**Pre-1980 INL-Exhumed SDA Waste Retrieval Containers**	
WIPP Status	N/A – Retrieved Container		
Waste Description	IDC SD-179 is not to be used for characterizing waste. (see Special Notes). This IDC includes all waste exhumed, generated, and/or repackaged during the Early Waste Retrieval (EWR) Project and placed into MIII bins and during the Initial Drum Retrieval (IDR) Project packaged into 85-gallon drums, FRP boxes, MIII bins and cargos whose primary waste form is unknown at the time of TSA retrieval. The waste includes all waste previously identified as IW-179. The waste includes any combination of inner containers associated with IDCs SD-176 through SD-178. [121, 122, 123, 124]		
Drum Configuration	EWR: All exhumed drums were wrapped in at least one layer of plastic. [121, 122, 123, 124] Exhumed drums were 55-gallon or 30-gallon drums. Leaking drums and breached drums were typically overpacked into 83-gallon drums. [121, 122] Loose waste (which may include a mix of debris, solids, and soils) was packaged into 55-gallon drums. [121]This waste may also be compacted in the drum. 55-gallon and 85-gallon drums were typically placed in Tri-Wall containers but may be direct loaded in an MIII bin. IDR: Exhumed drums were 55-gallon or 30-gallon drums. Breached or contaminated drums were wrapped in plastic and placed directly into 85-gallon drum or MIII bin over packs. All drums were overpacked into either 85-gallon drums, FRPs, MIII bins, or cargo containers. Rigid liners are not expected in any of the exhumed drums.		
Tri-Wall Configuration	EWR: A plastic liner was placed in each Tri-Wall prior to loading. Damaged (breached) drums and loose waste were placed into plastic bags and packaged in Tri-Wall cardboard boxes. [123, 124] Tri-Walls may hold up to four 55-gallon drums. Tri-Walls may contain drums, loose waste, or a combination of loose and drummed waste. IDR: Did not use Tri-Walls.		
Bin Configuration	EWR: Bins may contain, but are not limited to: • Eight 55-gallon drums **or** • Six 55-gallon drums and two 83-gallon drums or • Two Tri-Wall cardboard boxes on a wood pallet [121, 123, 124] IDR: Same as EWR but no Tri-Walls. • IDR MIII bins are not expected to contain loose waste. Absorbent (~100 pounds) was routinely spread inside the MIII bins. [123, 124]		
Cargos Configuration	See- IDCs: RF-751 and RF-999 for containers with suspect roaster oxide. Loose waste may accumulate in cargos during storage or retrieval activities.		
Primary Waste Parameter(s)	N/A – Retrieved container		
Special Notes	IDC SD-179 is reserved to track containers packaged with waste exhumed from the pits and trenches and is not to be used to characterize the waste. If containers are examined by RTR, then recommend an IDC based on the majority of the waste contained in the container (reference IDCs SD-176, SD-177, and SD-178). The IDC does not include waste that has undergone RTR and is identified as containing suspect roaster oxide (See RF-751). Some of the exhumed bins are labeled "may contain ordnance;" however, no ordnance has been identified within bins examined to date. The contents of the eight drums labeled "Cluster Fragmentation Bomb" exhumed from Trench 5 were inspected to ensure that no drums containing cluster fragmentation bombs were moved to TSA-RE. The drums that contained only innocuous debris were moved to TSA-RE (the exact number of drums is unknown) but are still labeled "Cluster Fragmentation Bomb." [121, 128]		

N/A	*N/A*	*N/A*
N/A	**BN-180**	**Pad 1 Cells 1, 2, and 3 Waste Retrieval Containers**
WIPP Status	N/A – Retrieved Container	
Waste Description	IDC BN-180 is not to be used for characterizing waste (see Special Notes). Waste includes intact containers and repackaged containers of waste historically stored within Cells 1, 2, and 3 of Pad 1 with insufficient AK information to assign a legacy IDC. Waste may contain any type of waste.	
Inner Packaging	Waste may be double or triple bagged in small poly bags, or waste may be direct loaded into the waste drum	
Drum Preparation	Up to two poly drum bags	
Primary Waste Parameter(s)	N/A – Retrieved container	
Special Notes	IDC BN-180 is reserved to track containers packaged with waste retrieved from Cells 1, 2, and 3 of Pad 1 and is not to be used to characterize the waste. If containers are examined by RTR, then recommend an IDC based on the majority of the waste contained in the container (reference IDCs BN-511, BN-522 and BN-524) and an AK evaluation will be performed.	

Heterogeneous Debris Waste	*Unknown/Other Heterogeneous Debris*	*S5000*
S5490	**BC-201**	**Non-combustible Solids**
WIPP Status	WIPP Candidate	
Waste Description	Various non-combustible debris wastes from D&D activities including tools, crucibles, piping, valves, pieces of equipment, lead bricks, Plexiglas, and filters. Waste may also contain any amount of combustible debris waste such as cellulosics and plastic bagging.	
Inner Packaging	1-gallon cardboard cartons/poly bag (triple-bagged)	
Drum Preparation	Rigid liner/poly drum bag/poly or O-ring bag	
Bin Preparation	Non-removable plywood liners Bins may contain drums or triple-bagged waste. [260]	
Primary Waste Parameter(s)	Plastic (waste materials), other inorganic materials, iron-based metals/alloys, other metals (e.g., lead) **NOTE:** *Any amount of other debris waste parameters may be present.*	
Special Notes	Based on RTR results, waste may contain light ballasts (which may contain PCBs), compressed gas canisters, sealed containers >4 liters (e.g., 5-gallon metal cans), prohibited liquids, or impenetrable objects. [242] Liquid metal (i.e., mercury) wastes were sealed in polyethylene bottles, the bottles placed in a 1/2- or 1-gallon metal paint can, the can void space filled with vermiculite or plaster of Paris, and then sealed. [271]	

Heterogeneous Debris Waste		*Unknown/Other Heterogeneous Debris*	*S5000*
S5490	**BC-202**	**Combustible Solids–Paper/Cloth**	
WIPP Status	WIPP Candidate		
Waste Description	Cloth, paper, and wood products, primarily such as wipes, towels, rags, coveralls, booties, HEPA filter frames, plastic suits, plastic tent structures, rubber gloves, and air hose. Plastic and cellulosics are usually in the same drum.		
Inner Packaging	O-ring bag/poly bag/poly bag, or Poly bag/poly bag/poly bag		
Drum Preparation	Rigid liner/poly drum bag/poly drum bag Rigid liner/poly drum bag/O-ring bag		
Primary Waste Parameter(s)	Cellulosics, plastic (waste materials), rubber **NOTE:** *Any amount of other debris waste parameters may be present.*		
Bin Preparation	Non-removable plywood liners Bins may contain drums or triple-bagged waste [260]		
Special Notes	Based on RTR results, waste may contain aerosol cans or prohibited liquids. [242] Liquid metal (i.e., mercury) wastes were sealed in polyethylene bottles, the bottles placed in a half- or 1-gallon metal paint can, the can void space filled with vermiculite or plaster of Paris, and then sealed. [271]		

Heterogeneous Debris Waste		*Unknown/Other Heterogeneous Debris*	*S5000*
S5490	**BC-203**	**Paper, Cloth, Metal, Glass**	
WIPP Status	WIPP Candidate, Managed as PCB contaminated		
Waste Description	Cloth, paper, and wood products, primarily such as wipes, towels, rags, coveralls, booties, HEPA filter frames, miscellaneous metals, glass from D&D work, and gallon paint cans. Plastic and cellulosics are usually in the same drum.		
Inner Packaging	O-ring bag/poly bag/poly bag, or Poly bag/poly bag/poly bag		
Drum Preparation	Rigid liner/poly drum bag/poly drum bag Rigid liner/poly drum bag/O-ring bag		
Bin Preparation	Non-removable plywood liners Bins may contain drums or triple-bagged waste. [260]		
Primary Waste Parameter(s)	Cellulosics, other metals (e.g., lead), iron-based metals/alloys, other inorganic materials (e.g., glass), plastics (waste)		
Special Notes	Oils removed from equipment may be contaminated with PCBs. These oils were absorbed in Oil-Dri in 1-gallon metal cans, and the cans were placed in waste containers. An estimated twenty 1-gallon cans were placed in IDC BC 203 waste containers. PCB waste with any observable liquid is prohibited from disposal at WIPP. Do not recommend an IDC change to BC-202. Managed as PCB contaminated waste. [1] Liquid treatment not authorized for this IDC. Liquid metal (i.e., mercury) wastes were sealed in polyethylene bottles, the bottles placed in a 1/2- or 1-gallon metal paint can, the can void space filled with vermiculite or plaster of Paris, and then sealed. [271]		

Solidified Inorganics		*Solidified Homogeneous Solids*	*S3000*
S3150	**BC-204**	**Solidified Solutions**	
WIPP Status	WIPP Candidate		
Waste Description	Solidified solutions from washing gloveboxes. Approximately 30 gallons of water with Turco soap was mixed with 250 pounds of plaster of Paris and allowed to cure in the drum. [3]		
Inner Packaging	Direct loaded into the waste drum Approximately 5 pounds of plaster of Paris were added on top of waste.		
Drum Preparation	Rigid liner/poly drum bag A second poly drum bag may be present.		
Primary Waste Parameter(s)	Inorganic Matrix		
Special Notes	Based on RTR results, waste may contain prohibited liquids. [242]		

Solidified Inorganics [126]		*Unknown/Other Homogeneous Solids*	*S3000*
S3900	**NT-210**	**NTS Berkeley Solidified Liquids**	
WIPP Status	WIPP Candidate – Offsite Waste Solid Sampled by AMWTP and Characterized by CCP		
Waste Information	Contact the AMWTP offsite waste coordinator for descriptions of the waste, inner packaging, drum preparation, primary waste material parameters, and prohibited items. [126, 134, 154]		
Special Notes	If waste is <50% by volume homogeneous solids or contains prohibited items, notify the AMWTP offsite waste coordinator.		

Heterogeneous Debris Waste		*Heterogeneous Debris*	*S5000*
S5400	**NT-211**	**NTS Lawrence Berkeley Heterogeneous Debris**	
WIPP Status	WIPP Candidate – Offsite Waste Characterized by CCP		
Waste Information	Contact the AMWTP offsite waste coordinator for descriptions of the waste, inner packaging, drum preparation, primary waste material parameters, and prohibited items. [126, 135, 154]		
Special Notes	If waste is <50% by volume debris or contains prohibited items, notify the AMWTP offsite waste coordinator.		

Solidified Inorganics and Solidified Organics		*Unknown/Other Homogeneous Solids*	*S3000*
S3900	**LL-212**	**LLNL Solidified Liquids and Sludge**	
WIPP Status	WIPP Candidate – Offsite Waste Solid Sampled by AMWTP and Characterized by CCP		
Waste Information	Contact the AMWTP offsite waste coordinator for descriptions of the waste, inner packaging, drum preparation, primary waste material parameters, and prohibited items. [166, 167, 199]		
Special Notes	If waste is <50% by volume homogeneous solids or contains prohibited items, notify the AMWTP offsite waste coordinator.		

Solidified Organics [136]		*Unknown/Other Homogeneous Solids*	*S3000*
S3900	**NT-212**	**NTS LLNL Solidified Sludge and Liquids**	
WIPP Status	WIPP Candidate – Offsite Waste Solid Sampled by AMWTP Characterized by CCP		
Waste Information	Contact the AMWTP offsite waste coordinator for descriptions of the waste, inner packaging, drum preparation, primary waste material parameters, and prohibited items. [127, 130, 136, 137]		
Special Notes	If waste is <50% by volume homogeneous solids or contains prohibited items, notify the AMWTP offsite waste coordinator.		

Heterogeneous Debris Waste		*Heterogeneous Debris*	*S5000*
S5400	**LL-213**	**LLNL Heterogeneous Debris**	
WIPP Status	WIPP Candidate – Offsite Waste Characterized by CCP		
Waste Information	Contact the AMWTP offsite waste coordinator for descriptions of the waste, inner packaging, drum preparation, primary waste material parameters, and prohibited items. [166, 168, 199]		
Special Notes	If waste is <50% by volume debris or contains prohibited items, notify the AMWTP offsite waste coordinator.		

Heterogeneous Debris Waste		*Heterogeneous Debris*	*S5000*
S5400	**NT-213**	**NTS LLNL Heterogeneous Debris**	
WIPP Status	WIPP Candidate – Offsite Waste Characterized by CCP		
Waste Information	Contact the AMWTP offsite waste coordinator for descriptions of the waste, inner packaging, drum preparation, primary waste material parameters, and prohibited items. [127, 130, 138]		
Special Notes	If waste is <50% by volume debris or contains prohibited items, notify the AMWTP offsite waste coordinator.		

Heterogeneous Debris Waste		*Heterogeneous Debris*	*S5000*
S5400	**NT-214**	**NTS Lynchburg Heterogeneous Debris**	
WIPP Status	**WIPP Candidate – Offsite Waste Characterized by CCP**		
Waste Information	Contact the AMWTP offsite waste coordinator for descriptions of the waste, inner packaging, drum preparation, primary waste material parameters, and prohibited items. [129, 139, 155]		
Special Notes	If waste is <50% by volume debris or contains prohibited items, notify the AMWTP offsite waste coordinator.		

Heterogeneous Debris Waste		*Heterogeneous Debris*	*S5000*
S5400	**NT-215**	**NTS EG&G Heterogeneous Debris**	
WIPP Status	WIPP Candidate – Offsite Waste Characterized by CCP		
Waste Information	Contact the AMWTP offsite waste coordinator for descriptions of the waste, inner packaging, drum preparation, primary waste material parameters, and prohibited items. [140, 141, 157]		
Special Notes	If waste is <50% by volume debris or contains prohibited items, notify the AMWTP offsite waste coordinator.		

Solidified Inorganics		*Inorganic Homogeneous Solids*	*S3000*
S3100	**CW-216**	**Sludge Repackage Project PCB Contaminated Inorganic Sludge**	
WIPP Status	WIPP Candidate – Offsite Waste Characterized by CCP		
Waste Information	Contact the AMWTP offsite waste coordinator for descriptions of the waste, inner packaging, drum preparation, primary waste material parameters, and prohibited items. [279, 280]		
Special Notes	If waste is <50% by volume homogeneous solids or contains prohibited items, notify the AMWTP offsite waste coordinator.		

Heterogeneous Debris Waste		*Heterogeneous Debris*	*S5000*
S5400	**NT-216**	**NTS Roller Coaster Debris**	
WIPP Status	WIPP Candidate – Offsite Waste Characterized by CCP		
Waste Information	Contact the AMWTP offsite waste coordinator for descriptions of the waste, inner packaging, drum preparation, primary waste material parameters, and prohibited items. [142, 143, 158]		
Special Notes	If waste is <50% by volume debris or contains prohibited items, notify the AMWTP offsite waste coordinator.		

Heterogeneous Debris Waste		*Heterogeneous Debris*	*S5000*
S5400	**NT-217**	**NTS RF Decon Debris**	
WIPP Status	WIPP Candidate – Offsite Waste Characterized by CCP		
Waste Information	Contact the AMWTP offsite waste coordinator for descriptions of the waste, inner packaging, drum preparation, primary waste material parameters, and prohibited items. [144, 145, 156]		
Special Notes	If waste is <50% by volume debris or contains prohibited items, notify the AMWTP offsite waste coordinator.		

Heterogeneous Debris Waste		*Heterogeneous Debris*	*S5000*
S5400	**NT-218**	**NTS Livermore and Berkeley Combined Debris**	
WIPP Status	WIPP Candidate – Offsite Waste Characterized by CCP		
Waste Information	Contact the AMWTP offsite waste coordinator for descriptions of the waste, inner packaging, drum preparation, primary waste material parameters, and prohibited items. [146, 147, 159]		
Special Notes	If waste is <50% by volume debris or contains prohibited items, notify the AMWTP offsite waste coordinator		

Combustible Waste		*Plastic/Rubber Debris*	*S5000*
S5310	**NT-219**	**NTS ITRI Debris**	
WIPP Status	WIPP Candidate – Offsite Waste Characterized by CCP		
Waste Information	Contact the AMWTP offsite waste coordinator for descriptions of the waste, inner packaging, drum preparation, primary waste material parameters, and prohibited items. [148, 149, 160]		
Special Notes	If waste is <50% by volume debris or contains prohibited items, notify the AMWTP offsite waste coordinator.		

Heterogeneous Debris Waste		*Heterogeneous Debris*	*S5000*
S5400	**NT-220**	**NTS Decon and Maintenance Debris**	
WIPP Status	WIPP Candidate – Offsite Waste Characterized by CCP		
Waste Information	Contact the AMWTP offsite waste coordinator for descriptions of the waste, inner packaging, drum preparation, primary waste material parameters, and prohibited items. [150, 151, 161]		
Special Notes	If waste is <50% by volume debris or contains prohibited items, notify the AMWTP offsite waste coordinator.		

Salt Waste	*Chloride Salts*		*S3000*
S3141	**LL-221**	**LLNL Pyrochemical Salt Waste**	
WIPP Status	WIPP Candidate - Offsite Waste Solid Sampled by AMWTP and Characterized by CCP		
Waste Information	Contact the AMWTP offsite waste coordinator for descriptions of the waste, inner packaging, drum preparation, primary waste material parameters, and prohibited items. [166, 169, 199]		
Special Notes	If waste is <50% by volume homogeneous solids or contains prohibited items, notify the AMWTP offsite waste coordinator.		

Heterogeneous Debris		*Heterogeneous Debris*	*S5000*
S5400	**GV-222**	**GE VNC Hot Cell Debris Waste**	
WIPP Status	WIPP Candidate – Offsite Waste Characterized by CCP		
Waste Information	Contact the AMWTP offsite waste coordinator for descriptions of the waste, inner packaging, drum preparation, primary waste material parameters, and prohibited items. [162, 163, 201]		
Special Notes	If waste is <50% by volume debris or contains prohibited items, notify the AMWTP offsite waste coordinator.		

Heterogeneous Debris		*Heterogeneous Debris*	*S5000*
S5400	**SL-223**	**SNL LRRI Heterogeneous Debris**	
WIPP Status	WIPP Candidate – Offsite Waste Characterized by CCP		
Waste Information	Contact the AMWTP offsite waste coordinator for descriptions of the waste, inner packaging, drum preparation, primary waste material parameters, and prohibited items. [202, 203, 204]		
Special Notes	If waste is <50% by volume debris or contains prohibited items, notify the AMWTP offsite waste coordinator.		

Heterogeneous Debris		*Heterogeneous Debris*	*S5000*
S5400	**SL-224**	**SNL HFC Heterogeneous Debris**	
WIPP Status	WIPP Candidate – Offsite Waste Characterized by CCP		
Waste Information	Contact the AMWTP offsite waste coordinator for descriptions of the waste, inner packaging, drum preparation, primary waste material parameters, and prohibited items. [205, 206, 207]		
Special Notes	If waste is <50% by volume debris or contains prohibited items, notify the AMWTP offsite waste coordinator.		

Heterogeneous Debris		*Heterogeneous Debris*	*S5000*
S5400	**AW-225**	**EFL Lead Gloves**	
WIPP Status	WIPP Candidate – Offsite Waste Characterized by CCP		
Waste Information	Contact the AMWTP offsite waste coordinator for descriptions of the waste, inner packaging, drum preparation, primary waste material parameters, and prohibited items. [208]		
Special Notes	If waste is <50% by volume debris or contains prohibited items, notify the AMWTP offsite waste coordinator.		

Heterogeneous Debris		*Heterogeneous Debris*	*S5000*
S5400	**SL-227**	**Sandia Sources**	
WIPP Status	WIPP Candidate – Offsite Waste Characterized by CCP		
Waste Information	Contact the AMWTP offsite waste coordinator for descriptions of the waste, inner packaging, drum preparation, primary waste material parameters, and prohibited items. [209, 210, 243]		
Special Notes	If waste is <50% by volume debris or contains prohibited items, notify the AMWTP offsite waste coordinator.		

Heterogeneous Debris		*Heterogeneous Debris*	*S5000*
S5400	**ND-228**	**NRD Mixed Heterogeneous Debris**	
WIPP Status	WIPP Candidate – Offsite Waste Characterized by CCP		
Waste Information	Contact the AMWTP offsite waste coordinator for descriptions of the waste, inner packaging, drum preparation, primary waste material parameters, and prohibited items. [236, 237, 244]		
Special Notes	If waste is <50% by volume debris or contains prohibited items, notify the AMWTP offsite waste coordinator.		

Heterogeneous Debris		*Heterogeneous Debris*	*S5000*
S5400	**LB-229**	**LBNL Mixed Heterogeneous Debris**	
WIPP Status	WIPP Candidate – Offsite Waste Characterized by CCP		
Waste Information	Contact the AMWTP offsite waste coordinator for descriptions of the waste, inner packaging, drum preparation, primary waste material parameters, and prohibited items. [238, 239, 245]		
Special Notes	If waste is <50% by volume debris or contains prohibited items, notify the AMWTP offsite waste coordinator.		

Heterogeneous Debris		*Heterogeneous Debris*	*S5000*
S5400	**AE-230**	**Argonne CH Debris**	
WIPP Status	WIPP Candidate – Offsite Waste Characterized by CCP		
Waste Information	Contact the AMWTP offsite waste coordinator for descriptions of the waste, inner packaging, drum preparation, and primary waste material parameters. [221, 246]		
Special Notes	If waste is <50% by volume debris or contains prohibited items, notify the AMWTP offsite waste coordinator.		

Heterogeneous Debris Waste		*Unknown/Other Heterogeneous Debris*	*S5000*
S5490 [96]	**RF-241**	**Americium Process Residue**	
WIPP Status	WIPP Candidate		
Waste Description	Metal, glass, combustibles, plastic, and other miscellaneous debris wastes. Waste was generated in the cleanup and decommission of the americium recovery line. Other debris waste includes filters, leaded glovebox gloves, rags and wipes.		
Inner Packaging	O-ring bag and/or poly bag sealed and placed in Fiberpaks, 30-gallon drum or placed directly in 55-gallon drum. Shielding was provided by lead taping the Fiberpaks, lead lining (1/16- to 1/8-inch) the 30 or 55-gallon drums, or a combination of lead shielding. Some drums may have no shielding.		
Drum Preparation	Lead shielding (see above)/ rigid liner (after 1971)/poly drum bag/poly drum bag		
Primary Waste Parameter(s)	Other inorganic materials, other metals (e.g., lead), cellulosics, plastic (waste materials), rubber, iron-based metals/alloys		
Special Notes	Based on RTR results, waste may contain prohibited liquids, sealed containers > 4 liters, sharp objects, impenetrable objects, or impenetrable lead shielding. [242] Some drums may contain homogeneous solids packaged in metal paint cans. If >50% by volume homogeneous solids, recommend an IDC change to UN-00A and an AK evaluation will be performed. [125]		

Soils		*Soils*	*S4000*
S4200	**LA-250**	**Contaminated Soil from TA-21 DP West Facility**	
WIPP Status	WIPP Candidate – Offsite Waste Solid Sampled by AMWTP and Characterized by CCP		
Waste Information	Contact the AMWTP offsite waste coordinator for descriptions of the waste, inner packaging, drum preparation, primary waste material parameters, and prohibited items. [265, 268]		
Special Notes	If waste is <50% by volume soils or contains prohibited items, notify the AMWTP offsite waste coordinator.		

Soils		*Soils*	*S4000*
S4100	**OR-250**	**OR-NFS-CH-Soil**	
WIPP Status	WIPP Candidate – Offsite Waste Solid Sampled by AMWTP and Characterized by CCP		
Waste Information	Contact the AMWTP offsite waste coordinator for descriptions of the waste, inner packaging, drum preparation, primary waste material parameters, and prohibited items. [211, 212]		
Special Notes	If waste is <50% by volume soil or contains prohibited items, notify the AMWTP offsite waste coordinator.		

Solidified Inorganics		*Solidified Homogeneous Solids*	*S3000*
S3150	**SR-251**	**SRS Barnwell Solidified Inorganic Waste**	
WIPP Status	WIPP Candidate – Offsite Waste Solid Sampled by AMWTP and Characterized by CCP		
Waste Information	Contact the AMWTP offsite waste coordinator for descriptions of the waste, inner packaging, drum preparation, primary waste material parameters, and prohibited items. [213, 214]		
Special Notes	If waste is <50% by volume homogeneous solids or contains prohibited items, notify the AMWTP offsite waste coordinator.		

Solidified Inorganics		*Inorganic Particulates*	*S3000*
S3110	**SR-252**	**SRS F-Canyon and FB-Line Absorbed Wastes**	
WIPP Status	WIPP Candidate – Offsite Waste Solid Sampled by AMWTP and Characterized by CCP		
Waste Information	Contact the AMWTP offsite waste coordinator for descriptions of the waste, inner packaging, drum preparation, primary waste material parameters, and prohibited items. [215, 216]		
Special Notes	If waste is <50% by volume homogeneous solids or contains prohibited items, notify the AMWTP offsite waste coordinator.		

Solidified Inorganics		*Inorganic Particulates*	*S3000*
S3110	**SR-253**	**SRS Mound Site Inorganic Particulates**	
WIPP Status	WIPP Candidate – Offsite Waste Solid Sampled by AMWTP and Characterized by CCP		
Waste Information	Contact the AMWTP offsite waste coordinator for descriptions of the waste, inner packaging, drum preparation, primary waste material parameters, and prohibited items. [217, 218]		
Special Notes	If waste is <50% by volume homogeneous solids or contains prohibited items, notify the AMWTP offsite waste coordinator.		

Solidified Inorganics		*Inorganic Particulates*	*S3000*
S3110	**AE-254**	**Argonne CH Homogeneous Solids**	
WIPP Status	WIPP Candidate – Offsite Waste Solid Sampled by AMWTP and Characterized by CCP		
Waste Information	Contact the AMWTP offsite waste coordinator for descriptions of the waste, inner packaging, drum preparation, and primary waste material parameters. [220, 221]		
Special Notes	If waste is <50% by volume homogeneous solids or contains prohibited items, notify the AMWTP offsite waste coordinator.		

Solidified Inorganics		*Inorganic Homogeneous Solids*	*S3000*
S3100	**SR-255**	**SRS Inorganic Sludge from 235F**	
WIPP Status	WIPP Candidate – Offsite Waste Solid Sampled by AMWTP and Characterized by CCP		
Waste Information	Contact the AMWTP offsite waste coordinator for descriptions of the waste, inner packaging, drum preparation, primary waste material parameters, and prohibited items. [200, 248, 265, 268]		
Special Notes	If waste is <50% by volume homogeneous solids or contains prohibited items, notify the AMWTP offsite waste coordinator.		

Solidified Inorganics		*Inorganic Particulates*	*S3000*
S3110	**SR-256**	**SRS Inorganic Particulates from 221H**	
WIPP Status	WIPP Candidate – Offsite Waste Solid Sampled by AMWTP and Characterized by CCP		
Waste Information	Contact the AMWTP offsite waste coordinator for descriptions of the waste, inner packaging, drum preparation, primary waste material parameters, and prohibited items. [263, 265, 268]		
Special Notes	If waste is <50% by volume homogeneous solids or contains prohibited items, notify the AMWTP offsite waste coordinator.		

Solidified Inorganics		*Inorganic Particulates*	*S3000*
S3110	**SR-257**	**SRS Solidified Inorganics from 773A**	
WIPP Status	WIPP Candidate – Offsite Waste Solid Sampled by AMWTP and Characterized by CCP		
Waste Information	Contact the AMWTP offsite waste coordinator for descriptions of the waste, inner packaging, drum preparation, primary waste material parameters, and prohibited items. [265, 268]		
Special Notes	If waste is <50% by volume homogeneous solids or contains prohibited items, notify the AMWTP offsite waste coordinator.		

Solidified Organics		*Organic Sludges*	*S3000*
S3220	**SR-258**	**SRS Solidified Organics from 211F**	
WIPP Status	WIPP Candidate – Offsite Waste Solid Sampled by AMWTP and Characterized by CCP		
Waste Information	Contact the AMWTP offsite waste coordinator for descriptions of the waste, inner packaging, drum preparation, primary waste material parameters, and prohibited items. [266, 269]		
Special Notes	If waste is <50% by volume homogeneous solids or contains prohibited items, notify the AMWTP offsite waste coordinator.		

Solidified Inorganics		*Inorganic Sludges*	*S3000*
S3120	**SR-259**	**SRS Solidified Inorganics from 211F**	
WIPP Status	WIPP Candidate – Offsite Waste Solid Sampled by AMWTP and Characterized by CCP		
Waste Information	Contact the AMWTP offsite waste coordinator for descriptions of the waste, inner packaging, drum preparation, primary waste material parameters, and prohibited items. [267, 269]		
Special Notes	If waste is <50% by volume homogeneous solids or contains prohibited items, notify the AMWTP offsite waste coordinator.		

Solidified Organics		Organic Sludges	S3000
S3114	**SR-260**	**SRS Solidified Organics from 321M**	
WIPP Status	WIPP Candidate – Offsite Waste Solid Sampled by AMWTP and Characterized by CCP		
Waste Information	Contact the AMWTP offsite waste coordinator for descriptions of the waste, inner packaging, drum preparation, primary waste material parameters, and prohibited items. [259, 267, 269, 276]		
Special Notes	If waste is <50% by volume homogeneous solids or contains prohibited items, notify the AMWTP offsite waste coordinator.		

Solidified Organics		*Organic Absorbents*	*S3000*
S3212	**SR-261**	**BCLDP absorbed hydraulic sludge from JN-1**	
WIPP Status	WIPP Candidate – Offsite Waste Solid Sampled by AMWTP and Characterized by CCP		
Waste Information	Contact the AMWTP offsite waste coordinator for descriptions of the waste, inner packaging, drum preparation, primary waste material parameters, and prohibited items. [267, 269, 277, 278]		
Special Notes	If waste is <50% by volume homogeneous solids or contains prohibited items, notify the AMWTP offsite waste coordinator.		

Solidified Inorganics		*Off-Gas Treatment Sludges*	*S3000*
S3123	**RF-290**	**Filter Sludge**	
WIPP Status	WIPP Candidate		
Waste Description	Sludge is from the incinerator off-gas system or from filter plenums during a filter change, may also be from pumps		
Inner Packaging	Packaged in 1-quart ice cream cartons (plastic containers)/ small poly bag(s)/ 8802 Vollrath stainless can		
Drum Preparation	Rigid liner (after 1971)/poly drum bag/poly drum bag		
Primary Waste Parameter(s)	Inorganic Matrix		
Special Notes	There may be free liquids in the ice cream cartons. Based on RTR results, waste may contain prohibited liquids. [242] After 1974, sludge from incinerator off-gas system or from plenums with cement added to absorb liquids was identified as IDC RF-292. [44] Per available shipping records, IDC RF-290 was not shipped to INL after 1971. [97, 152]		

Solidified Inorganics		*Solidified Homogeneous Solids*	*S3000*
S3150	**RF-292**	**Cemented Sludge**	
WIPP Status	WIPP Candidate		
Waste Description	Incinerator sludge generated from the scrubber system. The sludge is a combination of fly ash and diatomaceous filter media. Portland cement was added as an absorbent for liquids in the sludge. Waste may also contain <50% by volume plastic debris items (e.g., filters).		
Inner Packaging	Prior to 1977 PVC bag/small poly bag/small poly bag/1-gallon metal paint can with cement to absorb free liquids. After 1977 the sludge was placed in 2-L to 1-gallon poly bottles small poly bag/ small poly bag.		
Drum Preparation	Rigid liner/poly drum bag/poly drum bag		
Box Preparation	Drums of this waste may be direct loaded into SWBs as an alternate packaging configuration for shipment to WIPP.		
Primary Waste Parameter(s)	Inorganic Matrix		
Special Notes	There may be free liquids in the poly bottles. Based on RTR results, waste may also contain prohibited liquids in the drum bag. Waste may also contain sealed containers >4 liters (e.g., clamshells) or sharp objects. [242] VE results show some sludge may be packaged directly into metal cans and the metal cans then packaged into small bags. A cement plug (other inorganic materials) may be present on the top of the bottle. Prior to 1974, cement was not added to the sludge and the sludge was identified as RF-290. [44]		

Graphite	*Graphite Debris*		*S5000*
S5126	**RF-300**	**Graphite Molds**	
WIPP Status	WIPP Candidate – Drums may also be characterized by CCP		
Waste Description	Graphite molds from Pu casting operations. The molds may be broken or whole. Pieces include spacers, electrodes, ingot molds, and graphite pieces from research. Waste may also contain <50% by volume cellulosic, plastic, rubber, glass, and metal materials (e.g., paper, cardboard, elastic bands, tubing, surgeon's gloves, thermocouples, bolts, tools).		
Inner Packaging	Poly bottle/O-ring bag / poly bag O-ring bag/poly bag O-ring bags are lined with a fiberboard liner and may include a fiberboard disc. Some drums may include graphite packaged in Kraft tubes [61, 91]		
Drum Preparation	Rigid liner (after1971) /poly drum bag / poly drum bag Rigid liner (after 1971) /poly drum bag / O-ring bag		
Primary Waste Parameter(s)	Other inorganic materials		
Special Notes	Based on RTR results, waste may contain prohibited liquids, sealed containers >4 liters, (including metal cans and 30-gallon drums) or sharp objects. [242] O-ring bags in the middle of the waste may be breached. An IDC change to RF-301, RF-303, RF-310 or RF-312 is not recommended, because these are all graphite debris waste also assigned to WSPF ID-RF-S5126.		

Graphite	*Graphite Debris*		*S5000*
S5126	**RF-301**	**Graphite Cores**	
WIPP Status	WIPP Candidate – Drums may also be characterized by CCP		
Waste Description	Graphite cores from Pu casting operations. The molds should be broken. Waste may include graphite electrodes and graphite pieces from research. Waste may also contain <50% by volume cellulosic, plastic, rubber, and metal debris items.		
Inner Packaging	Poly bottle/O-ring bag/poly bag O-ring bag/ poly bag O-ring bags are lined with a fiberboard liner and may include a fiberboard disc.		
Drum Preparation	Rigid liner (after 1971)/poly drum bag/poly drum bag Rigid liner (after 1971)/poly drum bag/O-ring bag		
Primary Waste Parameter(s)	Other inorganic materials		
Special Notes	O-ring bags in the middle of the waste may be breached. An IDC change to RF-300, RF-303, RF-310 or RF-312 is not recommended because these are all graphite debris waste also assigned to WSPF ID-RF-S5126.		

Combustibles	*Organic Debris*		*S5000*
S5300 [89]	**RF-302**	**Benelex and Plexiglas**	
WIPP Status	WIPP Candidate		
Waste Description	Benelex is a densely laminated wood product. It was usually coated with fire retardant paint. Benelex may also have lead shielding attached. Benelex came in 2-inch thick sheets. Plexiglas is a plastic sheeting 1/8 inch to 4-inch thick. Waste may also contain cellulosic or rubber (e.g., paper, rubber window gaskets, surgeon's gloves, and wipes), but may only contain <50% by volume metal debris items (e.g., leaded glass, angle iron, and metal hardware).		
Inner Packaging	Poly bag/poly bag Waste may be placed directly into waste drum or box.		
Drum Preparation	Rigid liner (after 1971)/poly drum bag/ poly drum bag A cardboard liner may be present in some drums.		
Box Preparation	Poly box bag/cardboard box liner		
Primary Waste Parameter(s)	Cellulosics (e.g., Benelex), plastic (waste material; e.g., Plexiglas), other metal (e.g., lead shielding)		
Special Notes	Based on RTR results, waste may contain sharp objects. [242] Benelex is a Cellulosic material and may have lead shielding attached and some of the hinges and handles may still be attached. The lead shielding was usually bolted to the Benelex so look for the bolts and nuts. Waste boxes generated during 1973 to 1974 may contain larger pieces of Benelex shielding on iron angle frames that were generated as part of the fire cleanup activities. IDC RF-302 replaced IDC RF-464 in late 1972.		

Graphite	*Graphite Debris*		*S5000*
S5126	**RF-303**	**Scarfed Graphite Chunks**	
WIPP Status	WIPP Candidate – Drums may also be characterized by CCP		
Waste Description	Waste consists of pieces of broken graphite molds generated from the mechanical cleaning (scarfing) of graphite molds and cores. Waste may also contain <50% by volume plastic and metal debris items.		
Inner Packaging	Poly bottle/O-ring bag/poly bag O-ring bag/poly bag Fiberpak/O-ring bag/poly bag O-ring bags are lined with a fiberboard liner and may include a fiberboard disc.		
Drum Preparation	Rigid liner (after 1971) / poly drum bag / poly drum bag Rigid liner (after 1971) / poly drum bag / O-ring bag		
Primary Waste Parameter(s)	Other inorganic materials		
Special Notes	O-ring bags in the middle of the waste may be breached. An IDC change to RF-300, RF-301, RF-310 or RF-312 is not recommended because these are all graphite debris waste also assigned to WSPF ID-RF-S5126.		

Graphite	*Graphite Debris*		*S5000*
S5126 [8]	**RF-310**	**Graphite Scarfings**	
WIPP Status	WIPP Candidate – Drums may also be characterized by CCP		
Waste Description	Graphite fines and small pieces generated mechanically during the removal of Pu from the molds.		
Inner Packaging	1-gallon poly bottle/O-ring bag/small poly bag		
Drum Preparation	Rigid liner (after 1971)/poly drum bag/poly drum bag 1 to 2 quarts Oil-Dri® or vermiculite in bottom of outer drum bag.		
Primary Waste Parameter(s)	Other inorganic materials		
Special Notes	Based on RTR results, waste may contain sharp objects. [242] An IDC change to RF-300, RF-301, RF-303 or RF-312 is not recommended because these are all graphite debris waste also assigned to WSPF ID-RF-S5126.		

Solidified Inorganics		*Unknown Other Inorganic Particulates*	*S3000*
S3119	**RF-311**	**Graphite Heels**	
WIPP Status	WIPP Candidate		
Waste Description	Heel remaining after graphite scarfings were dissolved in nitric acid to recover the Pu. The graphite heel was collected on an R-6 filter pad and dried.		
Inner Packaging	1-gallon poly bottle/small PVC bag/small poly bag		
Drum Preparation	Rigid liner (after 1971) / poly drum bag / poly drum bag 1 to 2 quarts Oil-Dri® or vermiculite on top of outer drum bag.		
Box Preparation	Poly box liner/cardboard box liner		
Primary Waste Parameter(s)	Other inorganic materials		
Special Notes	Box may contain graphite molds and other foundry supplies generated during cleanup operations after the 1969 fire. If >50% by volume debris, recommend an IDC change.		

Graphite	*Graphite Debris*		*S5000*
S5126	**RF-312**	**Coarse Graphite**	
WIPP Status	WIPP Candidate – Drums may also be characterized by CCP		
Waste Description	Scarfed graphite pieces and broken graphite molds from Pu casting operations. Pieces include spacers, electrodes, ingot molds, and graphite pieces from research. The graphite was scarfed to remove the source metal for recovery. Waste may also contain <50% by volume plastic and metal debris items.		
Inner Packaging	Poly bottle/O-ring bag/poly bag O-ring bag/poly bag O-ring bags are lined with a fiberboard liner and may include a fiberboard disc. Fiberpak/O-ring bag/poly bag		
Drum Preparation	Rigid liner (after 1971)/poly drum bag/poly drum bag Rigid liner (after 1971)/poly drum bag/O-ring bag		
Primary Waste Parameter(s)	Other inorganic materials		
Special Notes	O-ring bags in the middle of the waste may be breached. Insufficiently destroyed shapes may be classified waste. An IDC change to RF-300, RF-301, RF-303, or RF-310 is not recommended because these are all graphite debris waste also assigned to WSPF ID-RF-S5126.		

Uncategorized Metal		*Metal Debris with Lead*	*S5000*
S5112	**RF-320**	**Heavy Non-special Source Metal**	
WIPP Status	WIPP Candidate		
Waste Description	Heavy non-special source metals are metals above copper on the Periodic Table and include tantalum, tungsten, platinum, depleted uranium, lead bricks/tape/sheeting. Waste consists primarily of tantalum crucibles, funnels, funnel inserts, and pour-rods. Waste may also contain <50% by volume plastic waste.		
Inner Packaging	Poly bag / poly bag or O-ring bag / poly bag Waste may be in Fiberpaks.		
Drum Preparation	Rigid liner (after 1971) / poly drum bag / poly drum bag Drums may be lead lined.		
Box Preparation	Poly box liner/cardboard box liner		
Primary Waste Parameter(s)	Other metals (e.g., lead, tantalum, tungsten, platinum), iron-based metals/alloys		
Special Notes	Based on RTR results, waste may contain light ballasts or transformers (which may contain PCBs), compressed gases (including aerosol cans), mercury, prohibited liquids, sealed containers >4 liters, impenetrable objects/waste. Based on VE results, waste may also contain sharp objects. [242] Depleted uranium is very dense like lead. Do not recommend an IDC change to RF-321, RF-480, or RF-481, because these are all metal waste also assigned to WSPF BN296.		

Uncategorized Metal		*Metal Debris with Lead*	*S5000*
S5112	**RF-321**	**Lead**	
WIPP Status	WIPP Candidate		
Waste Description	Lead waste in the form of lead bricks, shielding, glovebox port covers. Waste may also contain lead-acid batteries.		
Inner Packaging	Poly bag/poly bag O-ring bag/poly bag		
Drum Preparation	Rigid liner (after 1971)/poly drum bag/poly drum bag		
Primary Waste Parameter(s)	Other metals (e.g., lead), iron-based metals/alloys		
Special Notes	Based on RTR results, waste may contain sharp objects. [242] An IDC change to RF-320, RF-480, or RF-481 is not recommended, because these are all metal waste also assigned to WSPF BN296.		

Filters	*Composite Filters*		*S5000*
S5410	**RF-328**	**Ful-Flo Incinerator Filters**	
WIPP Status	WIPP Candidate		
Waste Description	Filters including hollow cylindrical filters 10 inch × 3-½ inch diameter made of fibrous resin material or In-Line liquid filters made of polypropylene.		
Inner Packaging	O-ring bag/poly bag/clamshell Some filters may be packaged in poly bottles.		
Drum Preparation	Rigid liner (after 1971)/poly drum bag/poly drum bag		
Primary Waste Parameter(s)	Plastic (waste materials)		
Special Notes	Based on RTR results, waste may contain prohibited liquids. [242] The fibrous resin Ful-Flo filters can be distinguished from the polypropylene wound Ful-Flo filters. The fibrous resin filters have a cross weave pattern of ¼-inch deep grooves that circle the filter along its length. Grooves look much like they were cut by a lathe. Waste may have free liquids. Clamshells are sealed container >4 liters if closed. Liquids may be present in the bagging materials. An IDC change to RF-335, RF-338, RF-360, RF-376, or RF-490 is not recommended because these are all filter/insulation waste also assigned to WSPF BN211.		

Combustibles	*Organic Debris*		*S5000*
S5300 [89]	**RF-33A**	**WETP Bin Program – Combustibles A**	
WIPP Status	WIPP Candidate		
Waste Description	WETP Bin Program – Combustibles A (IDCs RF-335, RF-336, RF-337 and, RF-339)		
Inner Packaging	Bagged waste was removed from IDC RF-336, RF-337, and RF-339 drums for VE. Bags were breached for VE. After VE, waste was placed directly into bins.		
Bin Preparation	Wire mesh was placed in the bins (possibly on top and under the waste). Bins were then overpacked in SWBs.		
Primary Waste Parameter(s)	Cellulosics, plastic (waste materials), rubber		
Special Notes	Bins may contain 8 × 8 inch glovebox filters (IDC RF-335) consisting of glass and polyamide filter media. (Other inorganic materials)		

Combustibles	*Organic Debris*		*S5000*
S5300 [89]	**RF-33B**	**WETP Bin Program – Combustibles B**	
WIPP Status	WIPP Candidate		
Waste Description	WETP Bin Program – Combustibles B (IDCs RF-330, RF-337 and, RF-339)		
Inner Packaging	Bagged waste was removed from IDC RF-330, RF-337, and RF-339 drums for VE. Bags breached for VE. After VE, waste was placed directly into bins.		
Bin Preparation	Wire mesh was placed in the bins (possibly on top and under the waste). Bins were then overpacked in SWBs.		
Primary Waste Parameter(s)	Cellulosics, rubber, plastic (waste materials), rubber		
Special Notes			

Combustibles	*Organic Debris*		*S5000*
S5300 [89]	**RF-330**	**Paper and Rags-Dry**	
WIPP Status	WIPP Candidate – Drums may also be characterized by CCP		
Waste Description	Cloth, paper, and wood products including items such as wipes, towels, rags, coveralls, booties, gloves, HEPA filter frames, and lumber. Waste was packaged as a dry waste. Waste may also contain any amount of plastic, and rubber but may only contain <50% by volume metal and other inorganic material debris items (e.g., concrete, cement, leaded-glovebox gloves, surgeon's gloves, lead tape, and glass and metal items such as raschig rings, nails, cans, vials, bottles, lead sheeting, bolts, pipe, welding rods, batteries, tools, and wire). Absorbent may have been added to waste.		
Inner Packaging	O-ring bag/poly bag or poly bag/poly bag Waste in boxes may be contained in 1 to 4 layers of plastic, with outer bag punctured.		
Drum Preparation	Rigid liner (after 1971)/poly drum bag/poly drum bag or O-ring bag Drums may be lead-lined (waste from americium recovery line).		
Box Preparation	Poly box bag/ cardboard box liner Up to 100 pounds of absorbent may have been added to box during packaging.		
Primary Waste Parameter(s)	Cellulosics, plastic (waste materials), rubber		
Special Notes	Based on RTR results, waste may contain light ballasts or transformers (which may contain PCBs), compressed gases (including aerosol cans), mercury, prohibited liquids, sealed containers >4 liters, sharp objects, impenetrable waste/objects or impenetrable lead shielding.[242] An IDC change to RF-336 or RF-337 is not recommended because these are all organic debris waste also assigned to WSPF ID-RF-S5300-A. Prior to 1978, drums may contain compacted waste. [3]		

Filters	*Composite Filters*		*S5000*
S5410	**RF-335**	**Absolute 8 × 8 Filters**	
WIPP Status	WIPP Candidate		
Waste Description	Absolute glovebox air intake and exhaust HEPA filters. Filter sizes include 8 × 8 × 6 inches, 8 × 8 × 4 inches, and 12 × 12 × 6 inches. The glovebox filter frames are wood or metal. The filter media is fiberglass and Nomex (glass and aromatic polyamide fibers). The filter media can also be made of asbestos. The mesh screen is made of aluminum. The waste may also contain <50% by volume metal debris items.[70]		
Inner Packaging	O-ring bag/poly bag or poly bag/poly bag Filter media may be packaged in poly bottles.		
Drum Preparation	Rigid liner (after 1971)/poly drum bag/poly drum bag A limited number of drums may be lead-lined.		
Box Preparation	Poly box liner/cardboard box liner		
Primary Waste Parameter(s)	Cellulosics (90%) and aluminum-based metals/alloys (10%). **NOTE:** *Conservatively assign filter media in wood frame as cellulosics. Cement should be identified as other inorganic materials.*		
Special Notes	Based on RTR results, waste may contain prohibited liquids, sealed containers >4 liters, sharp objects, or impenetrable lead shielding. [242] An IDC change to RF-328, RF-338, RF-360, RF-376, or RF-490 is not recommended, because these are all filter/insulation waste also assigned to WSPF BN211.		

Combustibles	*Organic Debris*		*S5000*
S5300 [89]	**RF-336**	**Paper and Rags-Moist**	
WIPP Status	WIPP Candidate – Drums may also be characterized by CCP		
Waste Description	Cloth, paper and wood products including items such as wipes, towels, rags, coveralls, booties, gloves, and HEPA filter frames. Waste was packaged as a moist waste. Waste may also contain any amount of plastic and rubber but may only contain <50% by volume glass, metal and other inorganic material debris items (e.g., concrete, cement, metal scrap, leaded-glovebox gloves, lead tape, surgeon's gloves, raschig rings, vials, bottles, nails, cans, lead sheeting, bolts, pipe, welding rods, batteries, tools, and wire). Absorbent (Oil-Dri® or vermiculite) was added during packaging.		
Inner Packaging	O-ring bag/poly bag or poly bag/poly bag Waste in boxes may be contained in 1 to 4 layers of plastic.		
Drum Preparation	Rigid liner (after 1971) / poly drum bag / poly drum bag or O-ring bag Drums may be lead-lined (waste from americium recovery line).		
Box Preparation	Poly box bag/cardboard box liner Up to 200 pounds of absorbent (Oil-Dri®) added during packaging.		
Primary Waste Parameter(s)	Cellulosics, plastic (waste materials), rubber		
Special Notes	Based on RTR results, waste may contain light ballasts (which may contain PCBs), compressed gas cylinders (including aerosol cans), cans with ignitable liquids, mercury, prohibited liquids, sealed containers >4 liters, sharp objects, impenetrable objects/waste, or impenetrable lead shielding. [242] Individual drums may contain one-gallon metal cans of cemented sludge. [94] Based on the markings on container 10174247 (e.g., hand written "compacted"), individual containers may contain compacted waste. If >50% by volume homogeneous solids, recommend an IDC change. IDC UN-00A may be used if type of homogeneous solids is unknown (e.g., no markings on the drum). An IDC change to RF-330 or RF-337 is not recommended because these are all organic debris waste also assigned to WSPF ID-RF-S5300-A. Lack of absorbent is acceptable.		

Combustibles	*Organic Debris*		*S5000*
S5300 [89]	**ID-337**	**Plastic, Teflon, Wash, PVC, Ret. RF TRU**	
WIPP Status	WIPP Candidate		
Waste Description	Plastic and non-leaded rubber waste includes debris items in the form of empty bottles, piping, tubing, glovebox windows, bags, tape, sheeting, and protective clothing (e.g., supplied air suits, surgeon's gloves, booties, respirator masks, parts and cartridges, and non-leaded glovebox gloves), etc. Types of plastic include polyethylene, polypropylene, PVC, Teflon, tygon, and plexiglas. Types of rubber include latex, neoprene, hypalon and viton). "Washables" are rubber- and plastic-based materials that received a washing in Building 776 prior to being shipped offsite. Waste may also contain any amounts of cloth, paper and wood products including items such as wipes and paper. Waste may only contain <50% by volume metal and other inorganic material debris items (e.g., concrete, cement, leaded-glovebox gloves, surgeon's gloves, lead tape, and glass and metal items such as raschig rings, nails, cans, vials, bottles, lead sheeting, bolts, pipe, welding rods, batteries, tools, and wire). Absorbent may have been added to waste. [273]		
Inner Packaging	To be determined by RTR/VE. [273]		
Drum Preparation	To be determined by RTR/VE. [273]		
Primary Waste Parameter(s)	Plastic (waste materials), cellulosics, rubber		
Special Notes	This waste consists of containers of IDC RF-337 retrieved from TSA-1, Cell 5 during 1983. The containers were sent to the Rocky Flats Plant, opened, and the contents were reviewed, sorted, and repackaged. It is assumed this waste is similar to the original RF-337 waste. [2, 17, 54, 273] Based on RTR results, waste may contain compressed gases (including aerosol cans), prohibited liquids, sealed containers >4 liters, sharp objects, impenetrable objects/waste, or impenetrable lead shielding. [242] For a drum comprised primarily of respirator masks with metal cartridges, assign rubber (80%), aluminum-based metals/alloys (15%), and cellulosics (5%).		

Combustibles	*Organic Debris*		*S5000*
S5300 [89]	**RF-337**	**Plastic, Teflon, Washables, PVC**	
WIPP Status	WIPP Candidate – Drums may also be characterized by CCP		
Waste Description	Plastic and non-leaded rubber waste includes debris items in the form of empty bottles, piping, tubing, glovebox windows, bags, tape, sheeting, and protective clothing (e.g., supplied air suits, surgeon's gloves, booties, respirator masks, parts and cartridges, and non-leaded glovebox gloves), etc. Types of plastic include polyethylene, polypropylene, PVC, Teflon, tygon, and plexiglas. Types of rubber include latex, neoprene, hypalon and viton). "Washables" are rubber- and plastic-based materials that received a washing in Building 776 prior to being shipped offsite. [53] Waste may also contain any amounts of cloth, paper and wood products including items such as wipes and paper. [57] Waste may only contain <50% by volume metal and other inorganic material debris items (e.g., concrete, cement, leaded-glovebox gloves, surgeon's gloves, lead tape, and glass and metal items such as raschig rings, nails, cans, vials, bottles, lead sheeting, bolts, pipe, welding rods, batteries, tools, and wire). Absorbent may have been added to waste.		
Inner Packaging	O-ring bag/poly bag or poly bag/poly bag		
Drum Preparation	Rigid liner (after 1971)/poly drum bag/poly drum bag A limited number of drums are lead-lined.		
Box Preparation	Box poly bag/cardboard box liner		
Primary Waste Parameter(s)	Plastic (waste materials), cellulosics, rubber		
Special Notes	Based on RTR results, waste may contain compressed gases (including aerosol cans), prohibited liquids, sealed containers >4 liters, sharp objects, impenetrable objects/waste, or impenetrable lead shielding. [242] For a drum comprised primarily of respirator masks with metal cartridges, assign rubber (80%), aluminum-based metals/alloys (15%), and cellulosics (5%). An IDC change to RF-330 or RF-336 is not recommended because these are all organic debris waste also assigned to WSPF ID-RF-S5300-A.		

Lead/Cadmium Metal		*Non-Activated Lead*	*X7000*
X7211	**BL-338**	**RWMC Lead Shielded Overpack Empty**	
WIPP Status	Waste Not Currently Included in AMWTP Scope for WIPP Disposal		
Waste Description	Lead shielded overpack drums that are empty		
Inner Packaging	*Not currently summarized*		
Drum Preparation	*Not currently summarized*		
Primary Waste Parameter(s)	Other metals (e.g., lead)		
Special Notes	TBD		

Filters	*Composite Filters*		*S5000*
S5410	**RF-338**	**Insulation and CWS Filter Media**	
WIPP Status	WIPP Candidate		
Waste Description	Filter media (fiberglass, asbestos, paper), asbestos-type or fiberglass pipe insulation, baffling insulation, and asbestos fire blankets and gloves. The majority of the waste drums are believed to be filter media generated from splitting CWS, absolute and HEPA filters apart. Waste may also contain <50% by volume aluminum and wood filter frames.		
Inner Packaging	1-gallon poly bottle/PVC bag/poly bag or PVC or poly bag/poly bag Insulation waste may be placed directly into drum/box or wrapped with tape. Gloves and fire blankets may be single or double-contained in plastic.		
Drum Preparation	Rigid liner (after 1971)/poly drum bag/poly drum bag Up to 5 pounds absorbent added to bottom of drum bag.		
Box Preparation	Poly box bag/cardboard box liner		
Primary Waste Parameter(s)	Fiberglass filter media and insulation are other inorganic materials. CWS Filter media are conservatively assigned cellulosics. Asbestos and baffling insulation are other inorganic materials. Pre-filters (home furnace type) are cellulosics. **NOTE:** *Conservatively assign filter media as cellulosics when the type of media cannot be determined.*		
Special Notes	Based on RTR results, waste may contain prohibited liquids, sharp objects, or impenetrable lead shielding. [242] There may be some aluminum tape on the pipe insulation. Drum may contain a type of CWS filter with a metal housing (looks like a coffee can without a lid or bottom) and is conservatively assigned cellulosics (90%) and iron-based metals/alloys (10%). A limited number of drums may contain compacted insulation waste. After 1976, this IDC was phased out and waste was incorporated into IDC RF-376. [20] An IDC change to RF-328, RF-335, RF-360, RF-376, or RF-490 is not recommended because these are all filter/insulation waste also assigned to WSPF BN211.		

Combustibles	*Leaded Gloves/Aprons*		*S5000*
S5311	**RF-339**	**Leaded Rubber Gloves and Aprons**	
WIPP Status	WIPP Candidate		
Waste Description	Primarily neoprene/hypalon leaded glovebox gloves and leaded aprons and may also contain lead sheeting and bricks.		
Inner Packaging:	O-ring bag/poly bag or no inner bags if generated by Size Reduction Facility in Building 776		
Drum Preparation	Rigid liner/poly drum bag/poly drum bag Some drums may be lead-lined.		
Box Preparation	Poly box liner/cardboard box liner		
Primary Waste Parameter(s)	Gloves and aprons are 100% rubber - assigned per Carlsbad Field Office (CBFO) (WAP Table B3-1)		
Special Notes	Based on results of RTR examination, waste may contain prohibited liquids, impenetrable objects/waste. [242] Aprons are identifiable by shoulder harness rings. An IDC change to RF-463 is not recommended because this is leaded rubber waste also assigned to WSPF BN252. Historical ID typically begins with "IDRF0019." IDC RF-339 replaced IDC RF-463 in 1973.		

Filters	*Composite Filters*		*S5000*
S5410	**RF-360**	**Insulation**	
WIPP Status	WIPP Candidate		
Waste Description	Asbestos-type pipe insulation, fiberglass pipe insulation, baffling insulation, asbestos fire blankets and gloves, and filter media (fiberglass, asbestos, paper) from prefilters and filters. Waste may also contain <50% by volume combustible material such as surgeon's gloves. Portland cement or absorbent was added to wet waste.		
Inner Packaging	Poly bag/poly bag		
Drum Preparation	Rigid liner (after 1971)/poly drum bag/poly drum bag		
Box Preparation	Poly box bag/cardboard box liner		
Primary Waste Parameter(s)	Asbestos-type insulation is other inorganic materials. Pre-filters (home furnace type) are cellulosics. **NOTE:** *Conservatively assign filter media as cellulosics when the type of media cannot be determined.*		
Special Notes	Based on RTR results, waste may contain aerosol cans, prohibited liquids, or sealed containers >4 liters. [242] There may be some aluminum tape on the pipe insulation. An IDC change to RF-328, RF-335, RF-338, RF-376, or RF-490 is not recommended, because these are all filter/insulation waste also assigned to WSPF BN211. IDC RF-360 was replaced by IDC RF-338 in 1973.		

Solidified Inorganics		*Unknown/Other Inorganic Particulates*	*S3000*
S3119	**RF-361**	**Insulation Heel**	
WIPP Status	WIPP Candidate		
Waste Description	Insoluble insulation residue or "heel" remaining after the dissolution process to dissolve Pu contaminants in acid for reprocessing. Generated from an R&D process.		
Inner Packaging	8801 and 8802 Vollrath stainless steel cans, and/or ½ - 1-gallon poly bottles.		
Drum Preparation	Rigid liner (after 1971) / poly drum bag / poly drum bag / fiberboard liner 1 – 2 quarts Oil-Dri® or vermiculite in bottom of outer drum bag.		
Primary Waste Parameter(s)	Other inorganic materials		
Special Notes	TBD		

Inorganic Non-Metal	*Unknown/Other Inorganic Debris*		*S5000*
S5190 [63]	**RF-368**	**Magnesium Oxide Crucibles**	
WIPP Status	WIPP Candidate		
Waste Description	Magnesium oxide (MgO_2) crucibles and crucible pieces from the plutonium reprocessing activities. The crucibles may also contain <50% by volume residual salts. Waste may also contain <50% by volume cellulosics and plastics.		
Inner Packaging	O-ring bag/poly bag Poly bag/poly bag May be packaged in 1-gallon poly bottles, metal cans, or clamshell containers		
Drum Preparation	Rigid liner (after 1971)/poly drum bag/poly drum bag		
Primary Waste Parameter(s)	Other inorganic materials		
Special Notes	If closed, the clamshell container is a sealed container >4 liters.		

Inorganic Non-Metal	*Unknown/Other Inorganic Debris*		*S5000*
S5190 [63]	**RF-370**	**Leco Crucibles**	
WIPP Status	WIPP Candidate		
Waste Description	Aluminum silicate-based ceramic crucibles ranging from 4-inch × ¾-inch square to 1-inch × 1-inch diameter. The crucibles may be intact or in pieces. Waste may also contain <50% by volume plastics and metals.		
Inner Packaging	1-gallon metal paint cans/PVC bag/poly or PVC bag		
Drum Preparation	Rigid liner (after 1971)/poly drum bag/poly drum bag		
Primary Waste Parameter(s)	Other inorganic materials		
Special Notes	Prior to 1975, crucibles were broken before packaging into paint cans. Prior to 1972, IDC RF-370 may have been used for debris waste other than Leco Crucibles. For example, the contents of containers generated prior to 1972 may be >50% volume various debris types or even soils and solids (see RF-371). If < 50% Leco crucibles, then recommend an IDC change. [185]		

Inorganic Non-Metal		*Ceramic/Brick Debris*	*S5000*
S5123	**RF-371**	**Fire Brick**	
WIPP Status	WIPP Candidate		
Waste Description	Fire brick from Building 771 plutonium recovery incinerator. Individual drums may include primarily construction bricks and cinderblocks from the cleanup of the 1969 fire. Waste may also contain <50% by volume plastic, rubber, insulation, and metal debris items (e.g., surgical gloves, foil, and thermocouples). [71]		
Inner Packaging	Poly bag/poly bag or poly bag/poly bag/Fiberpak or placed directly into waste drum or box		
Drum Preparation	Rigid liner (after 1971)/poly drum bag/poly drum bag		
Box Preparation	Poly box bag/cardboard box liner		
Primary Waste Parameter(s)	Other inorganic materials		
Special Notes	Based on RTR results, waste may contain light ballasts (which may contain PCBs), aerosol cans, prohibited liquids, or sealed containers >4 liters, sharp objects, or impenetrable waste.[242] The brick or cinderblock shapes (including some broken bricks/blocks) should be identifiable by RTR. If brick/block shapes are not visible throughout the waste container, an AK or RTR SME evaluation is required. The contents of containers generated prior to 1974 were inconsistent with the current IDC and may be >50% by volume soil or construction rubble (e.g., concrete, blacktop) or any type of D&D waste. Recommend change to IDC RF-697 (>50% by volume soil, gravel, or sand) or IDC RF-374 (>50% by volume debris), if the waste was packaged after 1971. [58, 59, 78] Recommend change to IDC RF-090 (>50% by volume soil, gravel, or sand) or IDC RF-960 (>50% by volume construction rubble debris), if packaged prior to 1972. An IDC change to RF-377 is not recommended because this is fire brick waste also assigned to WSPF BN161.		

Heterogeneous Debris Waste		*Unknown/Other Heterogeneous Debris*	*S5000*
S5490 [9]	**RF-372**	**Grit**	
WIPP Status	WIPP Candidate		
Waste Description	Aluminum oxide, iron fines, or iron pellets, or silica used for grit blasting activities. Grit blasting media such as walnut shells, glass beads, and ceramic beads may also be included. [9]		
Inner Packaging	1-gallon poly bottles/O-ring bag/small poly bag PVC or poly bag / 8801 or 8802 Vollrath stainless steel can		
Drum Preparation	Rigid liner (after 1971)/poly drum bag/poly drum bag Up to 2 quarts Oil-Dri® added on top of outer sealed poly drum bag.		
Primary Waste Parameter(s)	Other inorganic materials, iron-based metals/alloys, aluminum-based metals/alloys **NOTE:** *Any amount of other debris waste parameters may be present.*		
Special Notes	Based on RTR results, waste may contain sealed containers >4 liters (e.g., clamshells) or sharp objects. [242] There may be metal fines with the grit, but metal fines will not be distinguishable at the RTR.		

Heterogeneous Debris Waste		*Unknown/Other Heterogeneous Debris*	*S5000*
S5490 [55]	**RF-374**	**Blacktop, Concrete, and Construction Rubble**	
WIPP Status	WIPP Candidate		
Waste Description	Blacktop, concrete, cinder blocks, rock, and construction rubble generated from construction, demolition, maintenance, size reduction, repackaging, decontamination, and decommissioning operations. Waste may also contain any amount of building or debris material that may be logically expected from these operations, including combustibles, metal, glass, plastic, rubber, ceiling tiles, floor tiles, sheetrock, etc. [37] Waste may only contain <50% by volume dirt and soil.		
Inner Packaging	Single- or double-contained in poly or PVC bags or Packaged in Fiberpaks or Placed directly into waste container		
Drum Preparation	Rigid liner (after 1971) / up to two poly drum bags May have cardboard drum liner		
Box Preparation	Poly box bag / cardboard box liner		
Primary Waste Parameter(s)	Other inorganic materials (e.g., concrete, rock, stone portion of blacktop, felt portion of tar paper), organic matrix (e.g., 5% for organic binder portion of blacktop; 10% for organic binder portion of tar paper) **NOTE:** *Any amount of other debris waste parameters may be present and <50% by volume soil/gravel is allowed.*		
Special Notes	Based on RTR results, waste may contain aerosol cans, prohibited liquids, sealed containers >4 liters, sharp objects, or impenetrable waste. [242] The earliest known package date for IDC RF-374 stored at INL is October 14, 1971. [152] The contents of containers generated prior to 1974 were inconsistent with the current IDC and may be >50% by volume soil or construction rubble (e.g., concrete, blacktop) or any type of D&D waste. WMC 5490/IDC RF-374 can ONLY be used if >50% by volume debris (e.g., metal, concrete, blacktop, rock or other debris materials). If >50% by volume soil, gravel, or sand (natural geologic material ≤2.36 inches [60 millimeters]), then recommend change to IDC RF-697. Soil is expected to be packaged directly into 55-gallon drum. If >50% homogeneous solids, recommend an IDC change based on information on traveler. IDC UN-00A may be used if type of homogeneous solids is unknown (e.g. type of homogeneous solids is not identified by the markings on the drum). Individual drums assigned historical IDC RF-374 have been found to contain homogeneous solids (e.g., one-gallon metal paint cans of cemented sludge or 1-gallon poly bottles of cemented resins) and an IDC change is required. [92, 93] If indeterminate, recommend IDC UN-00B or UN-00C and an AK evaluation will be performed. Small cans and bottles of various liquids (including lubricant, jelly, and paint) were reportedly found in individual boxes of MLLW. [118] The title of the IDC RF-374 was modified by AMWTP from "Blacktop, Concrete, Dirt, and Sand" to "Blacktop, Concrete, and Construction Rubble" to reflect IDC RF-374 waste stored at INL is only debris waste.		

Solidified Inorganics		*Inorganic Particulate Absorbents*	*S3000*
S3113	**RF-375**	**Oil-Dri®**	
WIPP Status	WIPP Candidate		
Waste Description	Oil-Dri®, vermiculite, and includes Oil-Dri® segregated from combustible feed to Plutonium Recovery Incinerator. Waste may also contain <50% by volume debris (e.g., rags, sorbent booms).		
Inner Packaging	1-gallon poly bottles / O-ring bag/small poly bag or Metal paint can/O-ring bag/small poly bag Either of these configurations may also have been packaged into a clamshell prior to placement in waste drum.		
Drum Preparation	Rigid liner (after 1971)/poly drum bag/poly drum bag/fiberboard liner May have absorbent between outer poly drum bag and the rigid liner		
Primary Waste Parameter(s)	Other inorganic materials		
Special Notes	If closed, the clamshell container is a sealed container >4 liters.		

Filters	*Composite Filters*		*S5000*
S5410	**RF-376**	**Cemented Insulation and Filter Media**	
WIPP Status	WIPP Candidate		
Waste Description	Filter media from various filters (prefilters, absolute glovebox, etc.), incinerator Ful-Flo filters, and whole filters such as 8 × 8 × 6-inch or 8 × 8 × 4-inch Absolute glovebox filters with wood or aluminum frames. Waste may include limited amounts on insulation waste, asbestos gloves, and fire blankets. Portland cement was added to the waste as an absorbent and for neutralization (up to 50 pounds for a drum and up to 180 pound for a box). Waste may also contain <50% by volume paper, rags, plastic, glass, and metal debris items. [70]		
Inner Packaging	15-gallon poly bag or smaller poly bags		
Drum Preparation	Rigid liner (after 1971) / poly drum bag / poly drum bag		
Box Preparation	Poly box bag / cardboard box liner		
Primary Waste Parameter(s)	Filter media is either other inorganic material or cellulosics. Insulation, asbestos, and cement are other inorganic materials. **NOTE:** *Conservatively assign filter media in whole filters in wood frame as cellulosics or when type of media cannot be determined.* HEPA filters with wood frames and aluminum mesh screens or baffles are cellulosics (90% for frame and filter media) and aluminum-based metals/alloys (10% for screens and baffles). HEPA filters with wood frames and with asbestos baffles are cellulosics (90% for frame and filter media) and other inorganic materials (10% for baffles). HEPA filters with metal frames and aluminum mesh screens or baffles are cellulosics (10% for filter media), iron-based metals/alloys (85% for frame), and aluminum-based metals/alloys (5% for screens and baffles). HEPA filters with metal frames and with asbestos baffles are cellulosics (10% for filter media), iron-based metals/alloys (85% for frame), and other inorganic materials (5% for baffles). Respirator canisters weigh about 0.25 pounds. The waste parameters for the respirator cartridges are divided in aluminum-based metals/alloys (70%) and Cellulosics (30%). One type of CWS filter has a housing that looks like a coffee can without a lid or bottom and is conservatively assigned cellulosics (90%) and iron-based metals/alloys (10%). Ful-Flo filters (filter with grooves or cross hatched weave) are plastic (waste materials). Pre-filters, similar to the type of filter used in a home furnace, are cellulosic (100%).		
Special Notes	Based on RTR results, waste may contain aerosol cans or prohibited liquids. Based on VE results, waste may also contain sharp objects.[242] There may be some aluminum tape on the pipe insulation. A full face respirator weighs 3 pounds and is mostly rubber. Waste packaged prior to 1979 may be packaged in bottles, cans or plastic bags other than 15-gallon plastic bag. [3, 90] Do not recommend an IDC change if >50% by volume insulation or filter media. An IDC change to RF-328, RF-335, RF-338, RF-360, or RF-490 is not recommended because these are all filter/insulation waste also assigned to WSPF BN211.		

Inorganic Non-Metal		*Ceramic/Brick Debris*	*S5000*
S5123	**RF-377**	**Coarse Fire Brick**	
WIPP Status	WIPP Candidate		
Waste Description	Fire brick from the Building 771 plutonium recovery incinerator. Pieces from ¼ inch to 1 inch.		
Inner Packaging	Poly bag/poly bag Poly bag/poly bag/Fiberpak		
Drum Preparation	Rigid liner (after 1971)/poly drum bag/poly drum bag		
Primary Waste Parameter(s)	Other inorganic materials		
Special Notes	An IDC change to RF-371 is not recommended, because this is fire brick waste also assigned to WSPF BN161.		

Inorganic Non-Metal		*Unknown/Other Inorganic Debris*	*S5000*
S5190 [64]	**RF-391**	**Crucibles and Sand**	
WIPP Status	WIPP Candidate		
Waste Description	These are the spent MgO_2 crucibles and spent MgO_2 sand from the button break out and foundry areas that have not been pulverized. The crucibles are broken and may include fines. Waste may also contain <50% by volume metal and plastic debris items.		
Inner Packaging	1-gallon poly bottle or 1-gallon metal paint can / O-ring bag / poly bag		
Drum Preparation	Rigid liner (after 1971)/poly drum bag/poly drum bag Some drums may be lead-lined		
Primary Waste Parameter(s)	Other inorganic materials		
Special Notes	Based on RTR results, waste may contain prohibited liquids, sealed containers >4 liters (e.g., clamshells) impenetrable waste or impenetrable lead shielding. [242]		

Inorganic Non-Metal		*Unknown/Other Inorganic Debris*	*S5000*
S5190 [64]	**RF-392**	**Sand, Slag, and Crucible**	
WIPP Status	WIPP Candidate		
Waste Description	These were the spent MgO_2 crucibles, slag, and spent sand from the button break out and foundry areas. The crucibles were broken into smaller pieces. Waste may also contain <50% by volume metal and plastic debris items.		
Inner Packaging	½ or 1-gallon poly bottle or 1-gallon metal paint can/O-ring bag/poly bag		
Drum Preparation	Rigid liner (after 1971)/poly drum bag/poly drum bag		
Primary Waste Parameter(s)	Other inorganic materials		
Special Notes	Based on RTR results, waste may contain sealed containers >4 liters (e.g., clamshells) or impenetrable waste. [242]		

Solidified Inorganic		*Unknown/Other Inorganic Particulates*	*S3000*
S3119 [13]	**RF-393**	**Sand, Slag, and Crucible Heels**	
WIPP Status	WIPP Candidate		
Waste Description	The spent MgO_2 crucible, slag, and sand from the button break out and foundry areas were processed through the ball mill to make into a coffee ground consistency and then processed through dissolution to recover the Pu. The material that did not dissolve in the dissolution process is the sand, slag, and crucible (SS&C) heels. Waste may or may not contain absorbent. Waste may also contain <50% by volume plastic debris items.		
Inner Packaging	½ to 1-gallon poly bottle/O-ring bag/poly bag May be packaged in 1-gallon paint cans.		
Drum Preparation	Rigid liner (after 1971)/poly drum bag/poly drum bag		
Primary Waste Parameter(s)	Other inorganic materials		
Special Notes	Approximately 15 to 30 bottles were packed in each drum. Based on RTR results, waste may contain sealed containers >4 liters (e.g., clamshells) or sharp objects. [242] If waste form is cemented pucks in plastic bags instead of uncemented heel in small containers (poly bottles or metal cans), then recommend an IDC change to RF-817. If indeterminate, recommend an IDC change to UN-00A and an AK evaluation will be performed.		

Salt Waste	*Chloride Salts*		*S3000*
S3141	**RF-409**	**Molten Salts-30% Unpulverized**	
WIPP Status	WIPP Candidate		
Waste Description	Unpulverized fused chunks of spent salt with a 30 mole% magnesium chloride		
Inner Packaging	Stainless steel can (8801, 8802, Stacker cans) or produce cans / O-ring bag / small poly bag/ 8802 or 8803 stainless steel can		
Drum Preparation	Waste Area Drum: Rigid liner (after 1971)/poly drum bag/poly drum bag Glovebox Load-Out Drum: Rigid liner (after 1971)/poly drum bag/O-ring load-out drum bag/fiberboard liner and disc		
Primary Waste Parameter(s)	Other inorganic materials		
Special Notes	TBD		

Salt Waste	*Chloride Salts*		*S3000*
S3141	**RF-410**	**Molten Salts-30% Pulverized**	
WIPP Status	WIPP Candidate		
Waste Description	Pulverized spent salt with a 30 mole% magnesium chloride		
Inner Packaging	Stainless steel can (8801, 8802, Stacker cans) or produce cans/O-ring bag/small poly bag/8802 or 8803 stainless steel can.		
Drum Preparation	Waste Area Drum: Rigid liner (after 1971)/poly drum bag/poly drum bag Glovebox Load-Out Drum: Rigid liner (after 1971)/poly drum bag/O-ring load-out drum bag/ fiberboard liner and disc		
Primary Waste Parameter(s)	Other inorganic materials		
Special Notes	Up to 50 cans per drum.		

Salt Waste	*Chloride Salts*		*S3000*
S3141	**RF-411**	**Electrorefining Salt**	
WIPP Status	WIPP Candidate		
Waste Description	Spent salt from the electrorefining process. The salt is a combination of chunks, granular, and fine particles. Waste may also contain <50% by volume metal pieces.		
Inner Packaging	Stainless steel can (8801, 8802, Stacker cans) or produce cans / O-ring bag/small poly bag/ 8802 or 8803 stainless steel can or 1-gallon paint cans		
Drum Preparation	Waste Area Drum: Rigid liner (after 1971)/poly drum bag/poly drum bag Glovebox Load-Out Drum: Rigid liner (after 1971)/poly drum bag/O-ring load-out drum bag/ fiberboard liner and disc		
Primary Waste Parameter(s)	Other inorganic materials		
Special Notes	Up to 50 cans per drum. Based on RTR results, waste may contain sealed containers >4 liters (e.g., clamshells). [242] If 1-gallon paint cans are present, then there may be lead or lead tape in paint cans.		

Salt Waste	*Chloride Salts*		*S3000*
S3141	**RF-412**	**Gibson Salts**	
WIPP Status	WIPP Candidate		
Waste Description	Gibson Spent Salt was generated from the Experimental Recovery Process to purify Pu. The salt is in the form of chunks and fines.		
Inner Packaging	Stainless steel can (8801, 8802, Stacker cans) or produce cans/O-ring bag/small poly bag/8802 or 8803 stainless steel can		
Drum Preparation	Waste Area Drum: Rigid liner (after 1971)/poly drum bag/poly drum bag Glovebox Load-Out Drum: Rigid liner (after 1971)/poly drum bag/O-ring load-out drum bag/fiberboard liner and disc		
Primary Waste Parameter(s)	Other inorganic materials		
Special Notes	Up to 50 cans per drum. Fiberpaks or clamshells may be lead lined or taped. If closed, the clamshell container is a sealed container >4 liters.		

Salt Waste	*Chloride Salts*		*S3000*
S3141	**RF-414**	**Direct Oxide Reduction Salt**	
WIPP Status	WIPP Candidate		
Waste Description	Spent Salt was generated from the direct oxide reduction process. The salt is in the form of chunks and fines. Waste may also contain <50% by volume ceramic debris items.		
Inner Packaging	Stainless steel can (8801, 8802, Stacker cans) or produce cans / O-ring bag / small poly bag/ 8802 or 8803 stainless steel can		
Drum Preparation	Waste Area Drum: Rigid liner (after 1971)/poly drum bag/poly drum bag Glovebox Load-Out Drum: Rigid liner (after 1971)/poly drum bag/O-ring load-out drum bag/fiberboard liner and disc		
Primary Waste Parameter(s)	Other inorganic materials		
Special Notes	Based on RTR results, waste may contain sealed containers >4 liters (e.g., clamshells). [242] Fiberpaks or clamshells may be lead lined or taped. If closed, the clamshell container is a sealed container >4 liters. Expect Oil-Dri® or vermiculite inside the rigid liner.		

Uncategorized Metal	*Metal Debris without Lead or Cadmium*		*S5000*
S5111	**RF-416**	**Zinc Magnesium Alloy Metals**	
WIPP Status	WIPP Candidate		
Waste Description	Billets or ingots of zinc-magnesium alloy metal from R&D work.		
Inner Packaging	Produce can/poly bag/poly bag/8802 Vollrath can O-ring bag/poly bag		
Drum Preparation	Rigid liner (after 1971)/poly drum bag/poly drum bag		
Primary Waste Parameter(s)	Other metals		
Special Notes	Up to 50 cans per drum. This waste consists of a single drum, historical ID is RF005400298.		

Solidified Inorganics		*Ash*	*S3000*
S3111	**RF-420**	**Ash, Incinerator (Virgin)**	
WIPP Status	WIPP Candidate		
Waste Description	Ash from incinerated combustibles at the Building 771 plutonium recovery incinerator. Ash was pulverized in a ball mill. Waste may also contain <50% by volume miscellaneous tramp metal and bits of unburned feed materials.		
Inner Packaging	½-gallon or 1-gallon poly bottle/O-ring bag/small poly bag The bottles may be bagged out separately or in groups.		
Drum Preparation	Rigid liner (after 1971)/poly drum bag/poly drum bag Oil-Dri® or vermiculite in bottom of inner bag.		
Primary Waste Parameter(s)	Other inorganic materials		
Special Notes	Up to 25 bottles per drum. Based on RTR results, waste may contain sealed containers >4 liters (e.g., large Vollrath cans or clamshells). [242] If waste form is cemented pucks in plastic bags instead of uncemented ash in poly bottles, then recommend an IDC change to RF-818. If indeterminate, recommend an IDC change to UN-00A and an AK evaluation will be performed.		

Solidified Inorganics		*Ash*	*S3000*
S3111	**RF-421**	**Ash Heels**	
WIPP Status	WIPP Candidate		
Waste Description	Ash heels are the remaining ash from the dissolution process. Incinerator ash was dissolved in nitric acid to recover Pu. The ash that did not dissolve was collected on an R-6 filter pad and dried. This dried ash is the ash heel.		
Inner Packaging	½-gallon or 1-gallon poly bottle/O-ring bag/small poly bag The bottles may be bagged out separately or in groups The waste may also be packaged in 8801/8802 cans.		
Drum Preparation	Rigid liner (after 1971)/poly drum bag/poly drum bag 1 – 2 quarts Oil-Dri® or vermiculite in bottom of outer drum bag. Individual packages are placed in the prepared drum		
Primary Waste Parameter(s)	Other inorganic materials		
Special Notes	Up to 25 bottles per drum. The waste may also be packaged in 8801/8802 cans. Based on RTR results, waste may contain sealed containers >4 liters (e.g., clamshells) or sharp objects. [242]		

Solidified Inorganics		*Ash*	*S3000*
S3111	**RF-422**	**Soot**	
WIPP Status	WIPP Candidate		
Waste Description	Soot is the waste collected from the cleaning of the plutonium recovery incinerator off-gas system.		
Inner Packaging	1-2 quart poly bottles/ O ring bags/small poly bags (could be placed in additional small poly bags. Bottles may be packaged out of the glovebox as a group or individually		
Drum Preparation	Rigid liner (after 1971)/poly drum bag/poly drum bag Oil-Dri® or vermiculite in bottom of inner bag. Individual packages were placed in prepared drums.		
Primary Waste Parameter(s)	Other inorganic materials		
Special Notes	Up to 50 bottles per drum. Based on RTR results, waste may contain prohibited liquids or sealed containers >4 liters (e.g., clamshells). [242] If waste form is cemented pucks in plastic bags instead of uncemented soot in poly bottles, then recommend an IDC change to RF-820. If indeterminate, recommend and IDC change to UN-00A and an AK evaluation will be performed.		

Solidified Inorganics		*Ash*	*S3000*
S3111	**RF-425**	**Fluid Bed Ash**	
WIPP Status	WIPP Candidate		
Waste Description	Fluid bed ash was generated from the combustion of combustible materials in the FBI pilot plant or the FBI demonstration unit.		
Inner Packaging	FBI Pilot Plant Ash: Small poly bag/O-ring bag/small poly bag FBI Demonstration Plant Ash: Direct loaded		
Drum Preparation	FBI Pilot Plant Ash: Rigid liner/drum bag/drum bag FBI Demonstration Plant Ash: Rigid liner/poly drum bag/O-ring load-out drum bag/fiberboard liner		
Primary Waste Parameter(s)	Other inorganic materials		
Special Notes	Oil-Dri®/vermiculite may be in outer drum bag and/or rigid liner. Based on RTR results, waste may contain sharp objects. [242]		

Combustibles	*Unknown/Other Organic Debris*		*S5000*
S5390 [10]	**RF-430**	**Unleached Ion Column Resin**	
WIPP Status	WIPP Candidate		
Waste Description	Spent anion and cation exchange resins from Pu and Am purification and recovery processes.		
Inner Packaging	Packaged in either a Fiberpak lined with poly bags and single or double bagged or a 1-gallon poly bottle and double bagged. Resin may have also been packaged in Kraft tubes. [2, 54] Based on RTR examinations, resin was also packaged in metal cans.		
Drum Preparation	Rigid liner (after 1971)/poly drum bag/poly drum bag Resin waste from the americium recovery line packaged in lead-lined drums.		
Primary Waste Parameter(s)	Plastic (waste material)		
Special Notes	Based on RTR results, waste may contain prohibited liquids or sealed containers >4 liters (e.g., clamshells). [242] Up to 10 Fiberpaks or up to 20 bottles per drum. After 1972, resins were leached, cemented and assigned IDC RF-432.		

Combustibles	*Unknown/Other Organic Debris*		*S5000*
S5390 [10]	**RF-431**	**Leached Resin**	
WIPP Status	WIPP Candidate		
Waste Description	Spent anion and cation exchange resins from Pu and Am purification and recovery processes. These resins were subsequently processed by leaching to recover the plutonium.		
Inner Packaging	Packaged in either a Fiberpak lined with poly bags and single or double bagged or a 1-gallon poly bottle and double bagged. Resin may have also been packaged in Kraft tubes. [2] Based on RTR examinations, resin was also packaged in metal cans.		
Drum Preparation	Rigid liner (after 1971)/poly drum bag/poly drum bag Resin waste from the americium recovery line packaged in lead-lined drums.		
Primary Waste Parameter(s)	Plastic (waste material)		
Special Notes	Based on RTR results, waste may contain prohibited liquids. [242] Up to 10 Fiberpaks or up to 20 bottles per drum. After 1972, leached resins were cemented and assigned IDC RF-432. Waste may be packaged in clamshells which are sealed containers >4 liters if closed.		

Solidified Organic		*Organic Homogeneous Solids*	*S3000*
S3211 [10]	**RF-432**	**Resin, Leached and Cemented**	
WIPP Status	WIPP Candidate		
Waste Description	Leached, spent anion and cation exchange resins cemented with Portland cement and water. One-half inch of dry Portland cement was added to the bottle before the slurry was added and on top of the hardened resin/cement mixture.		
Inner Packaging	½ or 1-gallon poly bottle or metal can/poly bag/poly bag Waste may be packaged in 30-gallon drum inside a 55-gallon drum. Some drums have lead lining (1/16- to 1/8-inch) in the 30 or 55-gallon drums, or a combination of both. [125]		
Drum Preparation	Rigid Liner (after 1971)/poly drum bag/poly drum bag Drums may be lead-lined (waste from americium recovery line, see above).		
Primary Waste Parameter(s)	Organic matrix [15] **NOTE:** *Portland cement separate from cemented resins is Other Inorganic Materials.*		
Special Notes	Up to 20 bottles per drum. Based on RTR results, waste may contain prohibited liquids, sealed containers >4 liters, sharp objects, impenetrable waste or impenetrable lead shielding. [242] RTR has identified cemented resins with no inner packaging. Waste may be packaged in clamshells which are sealed containers >4 liters if closed.		

Inorganic Non-Metal		*Glass Debris*	*S5000*
S5122	**RF-44A**	**WETP Bin Program - Glass**	
WIPP Status	WIPP Candidate		
Waste Description	WETP Bin Program (IDCs RF-440, RF-441, and RF-442)		
Inner Packaging	Bagged waste was removed from IDC RF-440, RF-441, and RF-442 drums for VE. Bags were breached for VE. After VE, waste was placed directly into bins. Waste may have been bagged out of the glove box or placed in Fiberpaks due to presence of sharp objects. Poly bag/poly bag Poly bag/poly bag/Fiberpak.		
Bin Preparation	Wire mesh was placed in the bins (possibly on top of and under the waste). Bins were then overpacked in SWBs.		
Primary Waste Parameter(s)	Other inorganic materials		
Special Notes	Can include small, broken glass pieces that are parts of Raschig rings (IDCs RF-441 and RF-442). If tank sludge/dried particulate (homogeneous solids) is noted, identify as Inorganic Matrix. WMC S5122/IDC RF-44A can ONLY be used if >50% by volume debris. If >50% by volume homogeneous solids, recommend an IDC change. IDC UN-00A may be used if type of homogeneous is unknown. If indeterminate, recommend IDC UN-00A or UN-00B and an AK evaluation will be performed. Plastic and cellulosics may be a part of this waste.		

Inorganic Non-Metal		*Glass Debris*	*S5000*
S5122	**RF-440**	**Glass**	
WIPP Status	WIPP Candidate		
Waste Description	Waste includes glass items such as bottles, vials, light bulbs, labware, glovebox windows, lead-taped sample vials, crushed and ground glass. The materials may be composed of glass, ceramic, leaded glass or quartz. Absorbent material (Oil-Dri®) may be present. Waste may also contain <50% by volume cellulosic, plastic, rubber and metal debris items (e.g., glovebox window frames and gaskets, cans, nuts, bolts, tools, bottles, leaded rubber gloves and aprons, cardboard, wood, filters, light ballasts). [72]		
Inner Packaging	½ or 1-gallon poly bottles/poly bag/poly bag, or O-ring bag/poly bag, or poly bag/poly bag Waste may be packaged in Fiberpaks. Waste (light bulbs, fluorescent tubes) may be placed directly into container.		
Drum Preparation	Rigid liner (after 1971)/poly drum bag/poly drum bag. Cardboard liner drum may be present. A small number of drums are lead-lined.		
Box Preparation	Poly box bag/cardboard box liner		
Primary Waste Parameter(s)	Other inorganic materials **NOTE:** *If leaded glass, then use a 50/50 ratio for the lead (other metals) and glass (other inorganic materials).*		
Special Notes	Based on RTR results, waste may contain aerosol cans, mercury, prohibited liquids, sealed container >4 liters, sharp objects, or impenetrable objects/waste. [242] Waste may contain rubber gaskets on windows. Leaded glass appears to become denser as rotated because a larger cross section of glass must be penetrated. Waste may also contain lead-taped glass bottles and vials. [77]		

Inorganic Non-Metal		*Inorganic Debris*	*S5000*
S5100 [89]	**RF-441**	**Raschig Rings, Unleached**	
WIPP Status	WIPP Candidate – Drums may also be characterized by CCP		
Waste Description	Borosilicate glass rings that were not cleaned after removal from the tank. Waste may also contain <50% by volume plastic, cellulosics, and metal debris items, tank sludge, and absorbent material.		
Inner Packaging	Poly bag/poly bag Poly bag/poly bag/Fiberpak May be packaged in 1-gallon poly bottles		
Drum Preparation	Rigid liner (after 1971)/poly drum bag/poly drum bag Some drums may have cardboard liner between drum bags.		
Box Preparation	Poly box bag/cardboard box liner		
Primary Waste Parameter(s)	Other inorganic materials		
Special Notes	Based on RTR results, waste may contain compressed gases (including aerosol cans), prohibited liquids, sealed containers >4 liters, sharp objects, or impenetrable waste. [242] Waste may include small, broken glass pieces. If tank sludge/dried particulate (homogeneous solids) is noted, then identify as Inorganic Matrix. WMC S5100/IDC RF-441 can ONLY be used if >50% by volume debris. If >50% by volume homogeneous solids, recommend an IDC change. IDC UN-00A may be used if type of homogeneous is unknown. If indeterminate, recommend IDC UN-00A or UN-00B and an AK evaluation will be performed. An IDC change to RF-442 is not recommended because this is raschig ring debris waste also assigned to WSPF ID-RF-S5100-A.		

Inorganic Non-Metal		*Inorganic Debris*	*S5000*
S5100 [89]	**RF-442**	**Raschig Rings, Leached**	
WIPP Status	WIPP Candidate – Drums may also be characterized by CCP		
Waste Description	Borosilicate glass rings that were leached/cleaned after removal from the tanks. Waste may also contain <50% by volume plastic, cellulosics, and metal debris items and absorbent material.		
Inner Packaging	Poly bag/poly bag Poly bag/poly bag/Fiberpak May be packaged in 1-gallon poly bottles		
Drum Preparation	Rigid liner (after 1971)/poly drum bag/poly drum bag Some drums may have cardboard liner between drum bags.		
Box Preparation	Poly box bag/cardboard box liner		
Primary Waste Parameter(s)	Other inorganic materials		
Special Notes	Based on RTR results, waste may contain prohibited liquids, sealed containers >4 liters, sharp objects, or impenetrable lead shielding. [242] Waste may include small, broken glass pieces. If tank sludge/dried particulate (homogeneous solids) is noted, then it should be considered as Inorganic Matrix. WMC S5100/IDC RF-442 can ONLY be used if >50% by volume debris. If >50% by volume homogeneous solids, recommend an IDC change. IDC UN-00A may be used if type of sludge is unknown. If indeterminate, recommend IDC UN-00A or UN-00B and an AK evaluation will be performed. An IDC change to RF-441 is not recommended because this is Raschig ring debris waste also assigned to WSPF ID-RF-S5100-A.		

Combustibles	*Unknown/Other Organic Debris*		*S5000*
S5390	**RF-460**	**Washables, Rubber, Plastic**	
WIPP Status	WIPP Candidate		
Waste Description	Plastic and rubber waste destined for the washing facility in Building 776. The items were contaminated with acids or caustics, or solvents. The glove washer in the Building 776 Size Reduction Vault reduction was used to wash the waste and remove any surface contaminants. Waste may also contain any amount of cellulosics.		
Inner Packaging	O-ring bag/poly bag Poly bag/poly bag		
Drum Preparation	Rigid liner (after 1971)/poly drum bag/poly drum bag		
Primary Waste Parameter(s)	Plastic (waste materials), rubber		
Special Notes	Based on RTR results, waste may contain impenetrable waste. [242] Leaded glovebox gloves and aprons may be in this waste. Leaded gloves and aprons should be assigned 100% Rubber per CBFO (WAP Table B3-1).		

Combustibles	*Leaded Gloves/Aprons*		*S5000*
S5311	**RF-463**	**Leaded Rubber Gloves and Aprons**	
WIPP Status	WIPP Candidate		
Waste Description	Primarily neoprene/Hypalon leaded glovebox gloves and leaded aprons.		
Inner Packaging	O-ring bag/poly bag		
Drum Preparation	Rigid liner(after 1971)/poly drum bag/poly drum bag Some drums may be lead-lined.		
Primary Waste Parameter(s)	Gloves and aprons are 100% rubber – assigned per CBFO (WAP Table B3-1)		
Special Notes	Based on RTR results, waste may contain prohibited liquids, sealed containers >4 liters (e.g., 30-gallon drum), or impenetrable waste. [242] Aprons are identifiable by shoulder harness rings. IDC 463 was replaced by IDC 339 in 1973. An IDC change to RF-339 is not recommended because this is leaded rubber waste also assigned to WSPF BN252.		

Combustibles	*Organic Debris*		*S5000*
S5300 [89]	**RF-464**	**Benelex and Plexiglas**	
WIPP Status	WIPP Candidate		
Waste Description	Benelex is a densely laminated wood product. It was usually coated with fire retardant paint. Benelex came in 2 or 4 inch thick sheets. Plexiglas is a plastic sheeting 1/8 to 4 inch thick. Waste may also contain rubber or cellulosics (e.g., rubber window gaskets, surgeon's gloves, and wipes) but may only contain <50% by volume glass and metal debris items (e.g., leaded glass, lead shielding, and metal hardware).		
Inner Packaging	Poly bag/poly bag Waste may be placed directly into drum.		
Drum Preparation	Rigid liner (after 1971)/poly drum bag/poly drum bag A cardboard liner may be present in some drums.		
Primary Waste Parameter(s)	Cellulosics (e.g., Benelex), plastic (waste materials) (e.g., Plexiglas)		
Special Notes	Based on RTR results, waste may contain prohibited liquids, sharp objects, or impenetrable waste. [242] Benelex is a cellulosic material and may have lead shielding (other metals) attached, and some of the hinges and handles may still be attached. The lead shielding was usually bolted to the Benelex so look for the bolts and nuts. This IDC was replaced by IDC RF-302 in late 1972.		

Uncategorized Metal		*Metal Debris with Lead*	*S5000*
S5112	**RF-48A**	**WETP Bin Program – Metal**	
WIPP Status	WIPP Candidate		
Waste Description	WETP Bin Program – Light Metal (IDCs RF-480 and RF-481)		
Inner Packaging	Bagged waste was removed from IDC RF-480 and RF-481 drums for VE. Bags were breached for VE. After VE, waste was placed directly into bins. Waste may have been repackaged in poly bags after VE. Poly bag/poly bag O-ring bag/Poly bag		
Bin Preparation	Wire mesh was placed in the bins (possibly on top and under the waste). Bins were then overpacked in SWBs.		
Primary Waste Parameter(s)	Iron-based metals/alloys, aluminum-based metals/alloys, other metals (e.g., lead)		
Special Notes	Verify protection from sharp objects. Metals usually have other waste such as plastic. This waste will likely contain lead.		

Uncategorized Metal		*Metal Debris with Lead*	*S5000*
S5112	**RF-480**	**Non-Special Source Metal**	
WIPP Status	WIPP Candidate		
Waste Description	Waste includes light metals such as iron, stainless steel, carbon steel, aluminum, copper, brass, bronze, and other light metals below copper on the periodic table. Waste may be in the form of gloveboxes, glovebox windows, furnaces, lathes, drill presses, ducting, piping, tubing, angle iron, tanks, downdraft tables, part-carriers, respirator filters, ultrasonic cleaners, mechanical parts, electrical parts, scrap metal, wire, cable, gauges, valves, planchettes, control panels, electronic instrumentation, vacuum sweepers, pumps, motors, railing, stairs, metal racks and trays, hotplates, empty metal produce and paint cans, carts, power tools, hand tools, chairs, desks, tables, typewriters, filing cabinets, crushed 55-gallon drums, lead cell batteries, aluminum foil, and light ballasts. Waste may also contain any amounts of lead (e.g., lead shielding, lead sheeting, scrap lead) but may only contain <50% by volume cellulosics, plastic, rubber, glass, and other inorganic material debris items (e.g., wipes, paper, wood, coveralls, glass containers, beakers, raschig rings, light bulbs, rubber gaskets, surgeon's gloves, plastic tubing and piping, rubber respirator masks, leaded rubber gloves, lead tape, leaded rubber aprons, concrete). [73]		
Inner Packaging	Poly bag/poly bag or O-ring bag/poly bag. Waste may be in Fiberpaks. Large items may be wrapped in plastic or placed directly into container and may have been size reduced to improve packaging efficiency. Smaller items (with or without plastic packaging) may be into drums or boxes.		
Drum Preparation	Rigid liner (after 1971)/poly drum bag/poly drum bag Some drums may be lead-lined (waste from americium lines).		
Box Preparation	Poly box bag/cardboard box liner Some boxes may be lead-lined (waste from americium lines).		
Primary Waste Parameter(s)	Iron-based metals/alloys, aluminum-based metals/alloys, other metals (e.g., lead, copper, brass, bronze) **NOTE:** *When the type of metal cannot be determined, use iron-based metals/alloys waste parameter.* [14]		
Special Notes	Based on RTR results, RF-480 waste packaged in drums or boxes may contain a wide variety of manufactured items which may contain PCB items (such as ballasts, capacitors, or transformers). [49] Waste may also contain wet cell batteries (with prohibited liquids), compressed gases (including aerosol cans), mercury, prohibited liquids, sealed containers >4 liters, sharp objects, impenetrable objects or impenetrable lead shielding. [242] Some boxes contain dense metal cylinders some of which are impenetrable and some of which contain liquids. Lead cell batteries with liquids in excess of WAP limits, or whose contents cannot be verified, are prohibited from disposal at the WIPP facility. [38] Small cans (1-gallon and smaller) of various liquids (including oil and paint remover) were reportedly found in individual boxes of MLLW. [118] An IDC change to RF-320, RF-321, or RF-481 is not recommended because these are all metal waste also assigned to WSPF BN296. Waste may include rubber respirator masks (as evidenced by grommets, snaps, and buckles as viewed by RTR). [60] An AK or RTR SME evaluation is required for this condition. Recommend change to IDC RF-337 if >50% by volume rubber respirator masks/respirator filters.		

Uncategorized Metal		*Metal Debris with Lead*	*S5000*
S5112	**RF-481**	**Leached Non-special Source Metal**	
WIPP Status	WIPP Candidate		
Waste Description	Waste includes light metals such as iron, stainless steel, carbon steel, aluminum, copper, brass, bronze, and other metals that were washed in hot water to remove surface contaminants such as acids or caustics. Waste may also contain any amount of lead (e.g., lead sheeting, lead pieces) but may only contain <50% by volume cellulosics, plastic, rubber, and glass debris items (e.g., wipes, paper, wood handles, plastic bottles, plastic tubing, glass containers, rubber gloves). [73]		
Inner Packaging	Poly bag/poly bag O-ring bag/poly bag Waste may be in Fiberpaks A small number of drums may be lead-lined		
Drum Preparation	Rigid liner (after 1971)/poly drum bag/poly drum bag A small number of drums may be lead-lined.		
Box Preparation	Plastic box liner/cardboard box liner		
Primary Waste Parameter(s)	Iron-based metals/alloys, aluminum-based metals/alloys, other metals (e.g., lead, copper, brass, bronze) **NOTE:** *When the type of metal cannot be determined, use iron-based metals/alloys waste parameter.* [14]		
Special Notes	Waste will likely contain lead. Based on RTR results, waste may contain light ballasts (which may contain PCBs), wet cell batteries (with prohibited liquids), compressed gases (including aerosol cans), prohibited liquids, sealed containers >4 liters, sharp objects, or impenetrable objects. [242] An IDC change to RF-320, RF-321, or RF-480 is not recommended because these are all metal waste also assigned to WSPF BN296.		

Lead/Cadmium Metal		*Metal Debris with Lead*	*S5000*
S5112	**RF-488**	**Glovebox Parts w/Lead**	
WIPP Status	WIPP Candidate		
Waste Description	Glass, lead sheeting, lead bricks, glovebox parts with lead sheeting, other metal parts		
Inner Packaging	O-ring bag/poly bag Poly bag/poly bag – packaged in boxes		
Box Preparation	Plastic box liner/cardboard box liner		
Primary Waste Parameter(s)	Iron-based metals/alloys, other inorganic materials (e.g., glass), other metals (e.g., lead), rubber		
Special Notes	This IDC was created by RF in 1988 to segregate glovebox parts with lead. [153]		

Filters	*Composite Filters*	*S5000*
S5410	**RF-490**	**HEPA Filters and CWS Filters**
WIPP Status	WIPP Candidate	
Waste Description	Waste is primarily whole 24 × 24 × 12 inch HEPA filters. Pre-1976 waste includes CWS (Chemical Warfare Service) filters. Waste also includes Absolute 8 × 8-in glovebox filters, prefilters, insulation, and respirator filters. Filter media include asbestos type, fiberglass, and paper types. Waste may also contain <50% by volume non-filter debris items (e.g., cardboard, rags, and plastic).[70]	
Inner Packaging	Poly bag/poly bag O-ring bag/poly bag The waste may also be packaged in a cardboard box	
Drum Preparation	Rigid liner (after 1971)/poly drum bag/poly drum bag Oil-Dri® was added to drums containing damp waste.	
Box Preparation	Poly box bag/cardboard box liner Up to 50 pounds of Portland cement added to any box containing damp filters. A small number of boxes contain uncrushed HEPA filters (~12 per box).	
Primary Waste Parameter(s)	Filter media is either other inorganic material or cellulosics. Insulation, fiberglass, and asbestos are other inorganic materials. **NOTE:** *Conservatively assign filter media in whole filters with wood frame as cellulosics or when the type of media cannot be determined.* One type of CWS filter has a housing that is typically metal and looks like a coffee can without a lid or bottom and is conservatively assigned cellulosics (90%) and iron-based metals/alloys (10%). HEPA filters with wood frames and aluminum mesh screens or baffles are cellulosics (90% for frame and filter media) and aluminum-based metals/alloys (10% for screens and baffles). HEPA filters with wood frames and with asbestos baffles are cellulosics (90% for frame and media) and other inorganic materials (10% for baffles). HEPA filters with metal frames and aluminum mesh screens or baffles are cellulosics (10% for filter media), iron-based metals/alloys (85% for frame), and aluminum-based metals/alloys (5% for screens and baffles). HEPA filters with metal frames and asbestos baffles are cellulosics (10% for filter media), iron-based metals/alloys (85% for frame), and other inorganic materials (5% for baffles). Respirator canisters (0.25 pounds) are aluminum-based metals/alloys (70%) and Cellulosics (30%).	
Special Notes	Filters may be crushed prior to placing in box. Based on RTR results, waste may contain prohibited liquids, sealed containers >4 liters, sharp objects, or impenetrable waste. [242] Waste may contain light ballasts (which may contain PCBs). Filters highly contaminated with nitrate salts (e.g., >25% white crystalline material) should be handled with care. [12] An IDC change to RF-328, RF-335, RF-338, RF-360, or RF-376 is not recommended because these are all filter/insulation waste also assigned to WSPF BN211.	

Filters	*Composite Filters*		*S5000*
S5410	**RF-491**	**Plenum Prefilters**	
WIPP Status	WIPP Candidate		
Waste Description	These are prefilters to the HEPA filters in the plenums.		
Inner Packaging	Poly bag/poly bag		
Box Preparation	Poly box bag/cardboard box liner		
Primary Waste Parameter(s)	Cellulosics, other inorganic materials (e.g., fiberglass) **NOTE:** *Conservatively assign filter media as cellulosics when the type of media cannot be determined.*		
Special Note	The thin metal wire in the prefilter is an insignificant contributor.		

Heterogeneous Debris Waste	*Unknown/Other Heterogeneous Debris*	*S5000*
S5490	**BN-500**	**Newly Generated Debris (not BN-508)**
WIPP Status	WIPP Candidate	
Waste Description	Heterogeneous non-PCB debris waste generated by AMWTP that is not BN-508 or BN-524. This IDC includes non-PCB waste generated in TSA-RE, Type II storage areas, Drum Repackaging Facility (DRF), Drum Treatment Facility (DTF), and waste characterization areas in WMF-634. It includes filters and waste repackaged in the Drum Waste Packaging Glovebox (DWPG) and Special Case Waste (SCW) and debris waste from the WMF-676 that is generated as a result of processing waste assigned IDCs not approved in RPT-TRUW-83. It may also include repackaged loose debris from breached containers that is **not** PCB contaminated. Waste may contain any type of debris waste (e.g., cloth, paper, plastics, glass, rubber, and metals debris). Waste may also contain <50% by volume soils or homogeneous solids (e.g., sludges).	
Inner Packaging	Waste may be double or triple bagged in small poly bags or waste may be direct loaded into the waste drum	
Drum Preparation	Up to two poly drum bags	
Primary Waste Parameter(s)	TBD by RTR or VE	
Special Notes	Based on VE results, waste may contain sharp objects. [242] This IDC is assigned after confirmation of non-PCB status. PCB items or debris waste suspected to be contaminated with PCBs are assigned IDC BN-604. IDC BN-500 does **not** include: • Secondary waste generated from managing waste received under the AMWTP Offsite Waste Program (reference IDC BN-521 for offsite waste) • Re-packaged non-PCB debris waste from Pad 1, Cells 1 and 2 (See BN-524).	

Soils	*Soil/Debris*		*S4000*
S4200	**BN-501**	**AMWTP PCB Soil**	
WIPP Status	WIPP Candidate		
Waste Description	Soils (natural geologic material ≤2.36 inches [60 millimeters]) generated during retrieval, characterization, treatment, packaging, storage, and other waste management operations conducted at the AMWTP that are or may be PCB contaminated. Also may include soils generated by AMWTP as a result of repackaging loose soil from breached containers that is suspect of being PCB contaminated as well as repackaged or intact containers of historically stored soils with insufficient AK information to assign a legacy IDC. Waste may also contain <50% by volume homogeneous solids or debris including natural geologic material (e.g., rocks) >2.36 inches (60 millimeters).		
Inner Packaging	Waste may be double or triple bagged in small poly bags or waste may be direct loaded into the waste drum.		
Drum Preparation	Up to two poly drum bags.		
Primary Waste Parameter(s)	Soils/gravel.		
Special Notes	PCB waste with any observable liquid is prohibited from disposal at WIPP. Based on RTR results, waste may contain sharp objects or may be impenetrable. [242] Containers within this IDC are classified as PCB. MLLW PCB soil is identified as IDC BN-627. Case-by-case evaluation required to manage this soil as non-PCB soil (reference IDCs BN-522 and BN-626).		

Solidified Inorganics		*Unknown/Other Homogeneous Solids*	*S3000*
S3900	**BN-505**	**Inorganic Homogeneous Solids**	
WIPP Status	WIPP Candidate		
Waste Description	Loose or cross contaminated inorganic homogeneous solids derived from historically stored waste (e.g., sludges, salts, ash, heels, special setups, or other process residual solids including absorbents) repackaged during retrieval, characterization, treatment, storage, and other waste management operations conducted at the AMWTP. Also may include inorganic homogeneous solids generated by AMWTP as a result of repackaging loose inorganic homogeneous solids from breached containers. Waste may include repackaged or intact containers of historically stored inorganic homogeneous solids waste with insufficient AK information to assign a legacy IDC. Waste may also contain <50% by volume commingled debris (metal cans, plastic bottles, etc.) and non-PCB soils.		
Inner Packaging	Waste may be packaged in small containers and double or triple bagged in small poly bags or waste may be direct loaded into the waste drum		
Drum Preparation	Up to two poly drum bags		
Primary Waste Parameter(s)	Inorganic Matrix (e.g., sludges, cemented liquids), other inorganic materials (e.g., absorbents, pyrochemical salts, graphite heels, SS&C heels)		
Special Notes	Based on VE results, waste may contain sealed containers > 4 liters or sharp objects. [242] Disposition of newly generated waste will be dependent on radioisotopic content. This does not include repackaged or intact containers of historically stored RF roaster oxide waste (RF-751) or evaporator salts (RF-005).		

Solidified Inorganics		*Inorganic Particulate Absorbents*	*S3000*
S3113	**BN-507**	**Absorbed Aqueous Squeezants**	
WIPP Status	WIPP Candidate		
Waste Description	Aqueous squeezants from the supercompactor that have been absorbed onto inorganic particulate absorbent materials (e.g., Aquaset®, Aquaset II-G®, or other approved inorganic absorbents).		
Inner Packaging	4-liter bottle / triple bagged into small poly bags		
Drum Preparation	Up to two poly drum bags		
Primary Waste Parameter(s)	Inorganic Matrix		
Special Notes	Based on RTR results, waste may contain prohibited liquids. Based on VE results, waste may also contain mercury. [242] Aqueous liquid (excluding water soluble solvents such as acetone and methanol) from the Supercompactor (BN-518, "squeezants") that have been absorbed are included under this IDC. Aqueous squeezants are collected as a liquid but must be absorbed before assignment of IDC BN-507 and to be a WIPP candidate container. Reference IDC BN-515 for absorbed aqueous liquids other than squeezants.		

Heterogeneous Debris Waste		*Unknown/Other Heterogeneous Debris*	*S5000*
S5490 [79]	**BN-508**	**AMWTP Newly Generated Debris**	
WIPP Status	WIPP Candidate		
Waste Description	This is debris waste generated in WMF-676 that is directly related to the S/C operations from processing containers assigned IDCs listed in RPT-TRUW-83 as approved feed stock (e.g., debris from box lines). It includes TRU debris waste generated during waste management, maintenance, and clean-up operations performed in WMF-676 Zone 3 in direct support of S/C operations, including HEPA and prefilters generated from the WMF-676 ventilation systems. Waste also includes TRU debris from repackaging waste in DWPG and SCW with IDCs approved in RPT-TRUW-83. Waste may also contain <50% by volume commingled non-PCB homogeneous solids (e.g., absorbents, sludges) and soil.		
Inner Packaging	Waste may be double or triple bagged in small poly bags or waste may be direct loaded into the waste drum No inner packaging for Advanced Mixed Waste Treatment Facility (AMWTF) "silvers"		
Drum Preparation	Up to two poly drum bags No drum bags for AMWTF "silvers"		
Primary Waste Parameter(s)	Iron-based metals/alloys, cellulosics, plastic (waste materials), other inorganic materials, rubber, other metals, aluminum-based metals/alloys **NOTE:** *Drum style HEPA filters are 90% iron-based metals/alloys, 5% aluminum-based metals/alloys, 2.5% rubber, and 2.5% cellulosics. Flanders Premier pre-filters are 80% other inorganic materials and 20% cellulosics.* [133]		
Special Notes	Waste is a mixture of newly-generated debris waste that could contain any types of debris and non-debris feedstock waste. IDC BN-508 does **not** include waste generated outside WMF-676, waste generated in WMF-676 Zones 1 and 2, waste generated in WMF-676 that is not directly related to the S/C operations, or waste derived from IDCs not listed in RPT-TRUW-83. [186] IDC BN-508 may **not** contain PCB items or PCB-contaminated waste (reference IDC BN-600). Legacy boxes may include less than 50% by volume, non-debris containers. If >50% by volume S3000 (e.g., absorbent, sludge) or S4000 (e.g., soil), recommend a change to UN-00A or UN-00C as appropriate and an AK evaluation will be performed. A catch pan may be placed on the bottom of each drum prior to compaction without impacting the assigned IDC BN-508. The catch pan weighs between 7.6 and 9 pounds and is constructed of the same material as a standard 55-gallon (17C) drum (i.e., iron-based metals/alloys). [42]		

Solidified Organics		*Absorbed Organic Liquids*	*S3000*
S3114	**BN-509**	**Absorbed Organic Liquids (Excluding Squeezants)**	
WIPP Status	WIPP Candidate		
Waste Description	Organic liquids derived from waste containers that are not PCB contaminated and that were treated using an inorganic particulate absorbent material (e.g., Micro-Cel® E, Petroset II-G®, Aquaset II-G®, or other approved inorganic absorbents). The absorbed organic liquids include prohibited containerized liquids removed and absorbed at SCW. This also includes absorbed organic liquids from maintenance activities and spill cleanups.		
Inner Packaging	Waste may be direct loaded into waste drum or packaged into 4-liter bottle / triple bagged into small poly bags		
Drum Preparation	Rigid liner if waste direct loaded into waste drum Up to two poly drum bags if waste packaged in 4-liter bottles		
Primary Waste Parameter(s)	Organic Matrix		
Special Notes	Organic liquids (including water soluble solvents such as acetone and methanol) that have been absorbed are included under this IDC. Organic wastes that are collected as a liquid must be absorbed before assignment of IDC BN-509 and to be considered a WIPP candidate container. IDC BN-509 does **not** include debris items designed or designated for spill cleanup or absorption of organic liquids (e.g., rags or PIG® spill response pig/mat products, reference IDC BN-500). IDC BN-509 does **not** include absorbed organic squeezants generated from the supercompactor (reference IDC BN-514). IDC BN-509 does **not** include PCB contaminated absorbed organic liquids (reference IDC BN-605).		

Heterogeneous Debris Waste		*Unknown/Other Heterogeneous Debris*	*S5000*
S5490	**BN-510**	**Supercompacted Debris**	
WIPP Status	WIPP Candidate		
Waste Description	All types of TRU debris waste that is compacted at the AMWTP and will be shipped to WIPP under WSPF BN510.		
Inner Packaging	All inner packaging is breached during compaction		
Drum Preparation	100-gallon product drums typically containing multiple compacted 55-gallon drums of feedstock debris (i.e., pucks) associated with the IDCs listed in RPT-TRUW-30.		
Box Preparation	Drums of this waste may be direct loaded into SWBs as an alternate packaging configuration for shipment to WIPP.		
Primary Waste Parameter(s)	Iron-based metals/alloys, cellulosics, plastic (waste materials), other inorganic materials, rubber, other metals, aluminum-based metals/alloys.		
Special Notes	The puck includes catch pans (if used) as well as the compacted feed drum. [42] Only those IDCs identified in RPT-TRUW-30 are authorized as feed to the supercompactor. [6]		

Solidified Organics		*Unknown/Other Homogeneous Solids*	*S3000*
S3900	**BN-511**	**PCB Organic Homogeneous Solids**	
WIPP Status	WIPP Candidate		
Waste Description	Loose or cross contaminated organic homogeneous solids derived from historically stored waste (e.g., organic setups IDCs RF-003 or RF-743) repackaged during retrieval, characterization, treatment, storage, and other waste management operations conducted at the AMWTP that may or are contaminated with PCBs. Also may include homogeneous solids generated by AMWTP as a result of repackaging loose homogeneous solids from breached containers that are suspected of being PCB contaminated. It also includes repackaged or intact containers of historically stored homogeneous solids waste with insufficient AK information to assign a legacy IDC. Waste may also contain <50% by volume commingled soils (e.g., interstitial soil) or debris (metal cans, plastic bottles, etc).		
Inner Packaging	Waste may be packaged in small containers and double or triple bagged in small poly bags or waste may be direct loaded into the waste drum		
Drum Preparation	Up to two Poly Drum Bags		
Primary Waste Parameter(s)	Organic Matrix		
Special Notes	PCB waste with any observable liquid is prohibited from disposal at WIPP. Organic waste derived from IDC RF-003 or IDC RF-743 is PCB waste. Loose homogeneous solid waste is assumed to be PCB contaminated. A case-by-case evaluation is required to manage the waste as non-PCB (reference IDC BN-513). This does not include repackaged or intact containers of historically stored RF roaster oxide waste (RF-751) or evaporator salts (RF-005).		

Solidified Organics		*Unknown/Other Homogeneous Solids*	*S3000*
S3900	**BN-513**	**Non-PCB Organic Homogeneous Solids**	
WIPP Status	WIPP Candidate		
Waste Description	Loose or cross-contaminated organic homogeneous solids derived from historically stored waste (e.g., organic sludges) repackaged during retrieval, characterization, treatment, storage, and other waste management operations conducted at the AMWTP. Also may include homogeneous solids generated by AMWTP as a result of repackaging loose organic homogeneous solids from breached containers. Waste may also contain <50% by volume commingled debris (metal cans, plastic bottles, etc.) and non-PCB soils.		
Inner Packaging	Waste may be packaged in small containers and double or triple bagged in small poly bags or waste may be direct loaded into the waste drum		
Drum Preparation	Up to two poly drum bags		
Primary Waste Parameter(s)	Organic Matrix		
Special Notes	Containers within this IDC are not classified as PCB. IDC BN-513 does **not** include PCB contaminated organic homogeneous solids (reference IDC BN-511).		

Solidified Organics		*Absorbed Organic Liquids*	*S3000*
S3114	**BN-514**	**Absorbed Organic Squeezants**	
WIPP Status	WIPP Candidate		
Waste Description	Organic squeezants from the supercompactor that have been absorbed onto inorganic particulate absorbent materials (e.g., Micro-Cel® E, Petroset II-G®, Aquaset®, Aquaset II-G®, or other approved inorganic absorbents).		
Inner Packaging	4-liter bottle / triple bagged into small poly bags		
Drum Preparation	Up to two Poly Drum Bags		
Primary Waste Parameter(s)	Organic Matrix		
Special Notes	Based on VE results, waste may contain mercury. [242] Organic squeezants (including water soluble solvents such as acetone and methanol) that have been absorbed are included under this IDC. Organic liquids from the supercompactor must be absorbed before assignment of IDC BN-514 and to be considered a WIPP candidate container. Reference IDC BN-509 for absorbed organic liquids other than squeezants.		

Solidified Inorganics		*Inorganic Particulate Absorbents*	*S3000*
S3113	**BN-515**	**Absorbed Aqueous Liquids (Excluding Squeezants)**	
WIPP Status	WIPP Candidate		
Waste Description	Aqueous liquids derived from waste containers that were treated using an inorganic particulate absorbent material (e.g., Aquaset II-G ®, Micro-Cel® E, or other approved inorganic absorbents). The absorbed aqueous liquids include prohibited containerized liquids removed and absorbed at SCW. This also includes absorbed aqueous liquids from maintenance activities and spill cleanups.		
Inner Packaging	Waste may be direct loaded into waste drum or packaged into 4-liter bottle / triple bagged into small poly bags		
Drum Preparation	Rigid liner if waste direct loaded into waste drum Up to two poly drum bags if waste packaged in 4-liter bottles		
Primary Waste Parameter(s)	Inorganic Matrix		
Special Notes	Aqueous liquid (excluding water soluble solvents such as acetone and methanol) that have been absorbed are included under this IDC. Aqueous liquid must be absorbed before assignment of IDC BN-515 and to be considered a WIPP candidate container. IDC BN-515 does **not** include debris items designed or designated for spill cleanup or absorption of aqueous liquids (e.g., rags or PIG® spill response pig/mat products, reference IDC BN-500). IDC BN-515 does **not** include absorbed aqueous squeezants from the supercompactor (reference IDC BN-507).		

Combustibles	*Debris Waste*		*S5000*
S5000	**BW-515**	**Plastics, Paper, Cloth, Etc.**	
WIPP Status	Waste not currently included in AMWTP scope for WIPP disposal		
Waste Description	*Not currently summarized*		
Inner Packaging	*Not currently summarized*		
Drum Preparation	*Not currently summarized*		
Primary Waste Parameter(s)	*Not currently summarized*		
Special Notes	TBD		

Solidified Inorganics		*Unknown/Other Homogeneous Solids*	*S3000*
S3900	**BN-516**	**AMWTP Inorganic Homogeneous Solids**	
WIPP Status	WIPP Candidate		
Waste Description	Inorganic homogeneous solids generated from general operation and maintenance activities conducted at the AMWTP. The primary process is cleanup of the 1st floor of the facility and cleanup of the supercompactor glovebox area. This is waste generated in WMF-676 that is directly related to the S/C operations from processing containers assigned IDCs listed in RPT-TRUW-83 as approved feed stock. The waste consists of dust build up material on the 1st floor and a mixture of paint flakes, solid waste and dried squeezants material at the supercompactor glovebox area. Solids are also generated as metal oxides from plasma cutting operations and collected during clean up of the BROKK pedestal area. Waste may also contain <50% by volume debris that cannot be practically separated from the waste.		
Inner Packaging	Waste may be packaged in small containers and double or triple bagged in small poly bags		
Drum Preparation	Up to two poly drum bags		
Primary Waste Parameter(s)	Inorganic Matrix (e.g., solids), Other inorganic materials (e.g., paint flakes, dried squeezants, floor sweepings, dust)		
Special Notes	Disposition of newly generated waste will be dependent on radioisotopic content. BN-516 is not derived from historically stored S3000 waste, (see BN-505). BN-516 does not include waste derived from processing waste assigned IDCs not approved in RPT-TRUW-83.		

Uncategorized Metal		*Debris Waste*	*S5000*
S5000	**BW-516**	**Steel, Al, Electrical Devices-Handheld**	
WIPP Status	Waste not currently included in AMWTP scope for WIPP disposal		
Waste Description	*Not currently summarized*		
Inner Packaging	*Not currently summarized*		
Drum Preparation	*Not currently summarized*		
Primary Waste Parameter(s)	*Not currently summarized*		
Special Notes	TBD		

N/A	*N/A*		*N/A*
N/A	**BN-517**	**TRU Supercompactor Squeezants (P/U listed)**	
WIPP Status	WIPP Candidate (after absorption)		
Waste Description	Inorganic or organic liquids generated as squeezants from the supercompaction of RPT-TRUW-83 feed stock wastes to the TRU supercompacted debris waste stream after the introduction of P/U listed feed stock debris to the Supercompactor.		
Inner Packaging	4-liter bottle / triple bagged into small poly bags		
Drum Preparation	No liner drum bag		
Primary Waste Parameter(s)	N/A		
Special Notes	TRU liquids require absorption for consideration as a WIPP candidate for disposal.		

Uncategorized Metal		*Debris Waste*	*S5000*
S5000	**BW-517**	**Heavy Metals, Steel, Al, Brass**	
WIPP Status	Waste not currently included in AMWTP scope for WIPP disposal		
Waste Description	*Not currently summarized*		
Inner Packaging	*Not currently summarized*		
Drum Preparation	*Not currently summarized*		
Primary Waste Parameter(s)	*Not currently summarized*		
Special Notes	TBD		

N/A	*N/A*		*N/A*
N/A	**BN-518**	**TRU Supercompactor Squeezants**	
WIPP Status	WIPP Candidate (after absorption)		
Waste Description	Inorganic or organic liquids generated as squeezants from the supercompaction of RPT-TRUW-83 feed stock wastes.		
Inner Packaging	4-liter bottle/ triple bagged into small poly bags		
Drum Preparation	no liner drum bag		
Primary Waste Parameter(s)	N/A		
Special Notes	TRU liquids require absorption for consideration as a WIPP candidate for disposal. After absorption, SCW assigns IDC BN-507 if inorganic/aqueous or IDC BN-514 if organic.		

N/A	*N/A*		*N/A*
N/A	**BN-519**	**TRU SDOP to Supercompactor**	
WIPP Status	N/A - Overpack Container		
Waste Description	All types of debris packaged in 55-gallon drums or larger that have been over-packed into a box or placed on a pallet for processing in AMWTF.		
Inner Packaging	All inner packaging is breached during size reduction or compaction.		
Box Preparation	No liners		
Primary Waste Parameter(s)	N/A – Overpack container		
Special Notes	IDC BN-519 is reserved to track boxes packaged with characterized debris drums for processing in AMWTF and is not to be used for characterizing waste. Six-Drum Overpack (SDOP) is a six-drum overpack wood box, Eight-Drum Metal Overpack (EMOP) is an eight-55-gallon drum metal pallet, and a Six-Drum Metal Overpack (SMOP) is a six-85-gallon drum metal pallet. Only those IDCs identified in RPT-TRUW-83 are authorized as feed to the supercompactor and used as SDOP, EMOP, or SMOP inner container feedstock.[6, 186]		

Heterogeneous Debris Waste		*Unknown/Other Heterogeneous Debris*	*S5000*
S5490	**BN-520**	**TRU PCB Secondary Debris Generated from Offsite Waste**	
WIPP Status	WIPP Candidate		
Waste Description	Heterogeneous PCB secondary debris generated from characterization, treatment, storage, and other waste management operations conducted at the AMWTP of offsite wastes that are **not** profiled by AMWTP for shipment to WIPP. The debris may include PCB items, PPE, tarps, tools, PIG® spill response pig/mat products, HEPA filters, smear paper, etc. May contain <50% by volume commingled non-debris waste such as soil and/or homogeneous solids.		
Packaging	Waste may be double or triple bagged in small poly bags or waste may be direct loaded into the waste drum		
Drum Preparation	Up to two poly drum bags		
Primary Waste Parameter(s)	TBD by RTR or VE		
Special Notes	PCB waste with any observable liquid is prohibited from disposal at WIPP. Based on RTR results, waste may contain sharp objects. [242] This IDC applies only to secondary waste generated from waste that is PCB waste and was received under the AMWTP Offsite Waste Program that will be profiled by CCP. IDC BN-520 does **not** include PCB contaminated debris waste generated during the cleanup spills or leaks from SDA containers (e.g., IDCs SD-703, SD-704, SD-705, and SD-706, reference BN-604).		

Heterogeneous Debris Waste		*Unknown/Other Heterogeneous Debris*	*S5000*
S5490	**BN-521**	**TRU Secondary Debris Generated from Offsite Waste**	
WIPP Status	WIPP Candidate		
Waste Description	Heterogeneous secondary debris generated from characterization, treatment, storage, and other waste management operations conducted at the AMWTP of offsite wastes that are **not** profiled by AMWTP for shipment to WIPP. The debris may include PPE, tarps, tools, PIG® spill response pig/mat products, HEPA filters, smear paper, etc. May contain <50% by volume commingled non-debris waste such as non-PCB soil and/or homogeneous solids.		
Packaging	Waste may be double or triple bagged in small poly bags or waste may be direct loaded into the waste drum		
Drum Preparation	Up to two poly drum bags		
Primary Waste Parameter(s)	TBD by RTR or VE		
Special Notes	This IDC applies only to secondary waste generated from waste that is **not** PCB waste and was generated as a result of managing waste received under the AMWTP Offsite Waste Program that will be profiled by CCP.		

Soils	*Soil/Debris*		*S4000*
S4200	**BN-522**	**AMWTP Non-PCB Soil**	
WIPP Status	WIPP Candidate		
Waste Description	Soils (natural geologic material ≤2.36 inches [60 millimeters]) generated during retrieval, characterization, treatment, packaging, storage, and other waste management activities conducted at the AMWTP that are not PCB contaminated. Also may include soils generated by AMWTP as a result of repackaging loose non-PCB soil from breached containers. Waste may include repackaged or intact containers of historically stored soils with insufficient AK information to assign a legacy IDC. Waste may also contain <50% by volume commingled non-PCB homogeneous solids or debris including natural geologic material (e.g., rocks) >2.36 inches (60 millimeters).		
Inner Packaging	Waste may be double or triple bagged in small poly bags or waste may be direct loaded into the waste drum		
Drum Preparation	Up to two poly drum bags		
Primary Waste Parameter(s)	Soils/gravel		
Special Notes	Based on RTR results, waste may be impenetrable.[242] Containers within this IDC are classified as non- PCB. MLLW non-PCB soil is identified as IDC BN-626. IDC BN-522 does **not** include soil that may be PCB contaminated (reference IDCs BN-501 and BN-627).		

Heterogeneous Debris Waste		*Unknown/Other Heterogeneous Debris*	*S5000*
S5490	**BN-523**	**Pad 1 Cells 1 and 2 PCB Debris**	
WIPP Status	WIPP Candidate		
Waste Description	Heterogeneous debris waste generated during repackaging of loose waste within Cells 1 and 2 of Pad 1 that may be commingled with PCB waste (e.g., homogeneous solids; oily soil; PCB liquids [e.g., oily liquids], or leaking PCB items including capacitors, transformers, electric motors, or hydraulic equipment). Waste may contain any type of debris waste (e.g., cloth, paper, plastics, glass, rubber and metal debris). Waste may also contain <50% by volume commingled soils or homogeneous solids (e.g., sludges).		
Inner Packaging	Waste may be double or triple bagged in small poly bags or waste may be direct loaded into the waste drum		
Drum Preparation	Up to two poly drum bags		
Primary Waste Parameter(s)	TBD by RTR or VE		
Special Notes	Loose homogeneous solids, oily soils, and oily liquids are assumed to be PCB contaminated. Reference IDC BN-524 for Cells 1 and 2 of Pad 1 heterogeneous debris waste that is not commingled with PCB waste.		

Heterogeneous Debris Waste		*Unknown/Other Heterogeneous Debris*	*S5000*
S5490	**BN-524**	**Pad 1, Cells 1 and 2 Non-PCB Debris**	
WIPP Status	WIPP Candidate		
Waste Description	Heterogeneous debris waste generated during repackaging of loose waste within Cells 1 and 2 of Pad 1 that is commingled with non-RF debris but is **not** commingled with PCB waste (see BN-523). Waste includes intact containers and repackaged containers of debris waste historically stored within Cells 1 and 2 of Pad 1 with insufficient AK information to assign a legacy IDC. Waste may contain any type of debris waste (e.g., cloth, paper, plastics, glass, rubber and metals debris). Waste may also contain <50% by volume commingled non-PCB soils.		
Inner Packaging	Waste may be double or triple bagged in small poly bags or waste may be direct loaded into the waste drum		
Drum Preparation	Up to two Poly Drum Bags		
Primary Waste Parameter(s)	TBD by RTR or VE		
Special Notes	IDC BN-524 does **not** include Cells 1 and 2 of Pad 1 heterogeneous debris that may be commingled with PCB waste (reference IDC BN-523).		

Heterogeneous Debris Waste		*Unknown/Other Heterogeneous Debris*	*S5000*
S5490	**BN-525**	**P/U-listed Lab Non-PCB Debris Waste**	
WIPP Status	WIPP Candidate		
Waste Description	Secondary waste generated in the laboratory from analyzing TRU waste samples that are characterized with P and/or U-listed HWNs. Waste may also contain <50% by volume homogeneous solids including absorbed/solidified laboratory extraction liquids, sample residues (leached solids remaining after extraction), and returned unused sample material. This waste was generated at the analytical laboratory located at RWMC and operated by AMWTP.		
Inner Packaging	See INST-OI-24 [116]		
Drum Preparation	See INST-OI-24 [116]		
Primary Waste Parameter(s)	Cellulosics, plastic, other inorganic materials **NOTE:** *Any amount of other debris waste parameters may be present.*		
Special Notes	WMC S5490/IDC BN-525 can only be used if contaminated laboratory waste is >50% by volume debris. If laboratory waste is >50% homogeneous solids, recommend IDC change to BN-602 IDC BN-525 containers that are not destined for disposal at WIPP (e.g., MLLW) are subject to the Land Disposal Restriction (LDR) program requirements. [241] As a result, mixtures of debris and non-debris waste cannot be classified as debris if the waste generated was the result of intentional mixing of debris and non-debris waste at the laboratory (reference 40 CFR 268.2). A case-by-case evaluation must be conducted for all MLLW BN-525 waste containers. Reference IDC BN-597 for laboratory debris waste that is or may be contaminated with PCBs		

Heterogeneous Debris Waste		*Unknown/Other Heterogeneous Debris Waste*	*S5000*
S5490	**IC-525**	**INTEC Laboratory Debris Waste (P/U-listed)**	
WIPP Status	Not a WIPP Candidate – Expired IDC (see Special Notes)		
Waste Information	See IDC IC-527		
Special Notes	IC-525 is identical to IC-527 and an IDC change to IC-527 is recommended. IDCs IC-525 and IC-527 were associated with INTEC/RWMC laboratory operations and may contain or may have been derived from unused hydrofluoric acid product (HWN U134). U134 waste with any observable liquid is prohibited from disposal at WIPP.[273]		

Heterogeneous Debris Waste		*Unknown/Other Heterogeneous Debris*	*S5000*
S5490	**BN-526**	**Lab PCB Debris Waste (not P/U-listed)**	
WIPP Status	WIPP Candidate		
Waste Description	Secondary waste generated in the laboratory from analyzing TRU waste samples. This waste includes debris waste (e.g., beakers, vials) that is or may be contaminated with PCBs. Waste may also contain <50% by volume homogeneous solids including absorbed/solidified laboratory extraction liquids, sample residues (leached solids remaining after extraction), and returned unused sample material. This waste is generated at the analytical laboratory located at RWMC and operated by AMWTP.		
Inner Packaging	See INST-OI-24 [116]		
Drum Preparation	See INST-OI-24 [116]		
Primary Waste Parameter(s)	Cellulosics, plastic, other inorganic materials **NOTE:** *Any amount of other debris waste parameters may be present.*		
Special Notes	PCB waste with any observable liquid is prohibited from disposal at WIPP. WMC S5490/IDC BN-526 can only be used if contaminated laboratory waste is >50% by volume debris. If laboratory waste is >50% homogeneous solids, recommend IDC change to BN-603. Any debris waste generated as the result of analyzing samples of PCB contaminated waste (e.g., IDCs RF-003, BC-203, BN-604, BN-605, RF-743, and RF-746) is PCB waste. PCB waste is prohibited from supercompaction (see INST-FOI-17, Facility Visual Examination Operations). IDC BN-526 containers that are not destined for disposal at WIPP (e.g., MLLW) are subject to the Land Disposal Restriction (LDR) program requirements.[241] As a result, mixtures of debris and non-debris waste cannot be classified as debris if the waste generated was the result of intentional mixing of debris and non-debris waste at the laboratory (reference 40 CFR 268.2). A case-by-case evaluation must be conducted for all MLLW BN-526 waste containers. Reference IDC BN-527 for laboratory debris waste that is **not** contaminated with PCBs.		

Heterogeneous Debris Waste		*Unknown/Other Heterogeneous Debris*	*S5000*
S5490	**IC-526**	**INTEC Laboratory PCB Debris Waste**	
WIPP Status	WIPP Candidate		
Waste Description	Secondary waste generated in the laboratory from analyzing TRU waste samples. This waste includes debris waste (e.g., beakers, vials) that is or may be contaminated with PCBs. Waste may also contain <50% by volume homogeneous solids including absorbed/solidified laboratory extraction liquids, sample residues (leached solids remaining after extraction), and returned unused sample material. This waste was generated at the analytical laboratory located at INTEC. [222, 273]		
Inner Packaging	One or more plastic bags (e.g., polyethylene bag or Ziploc-type inner bag with a polyethylene bag over it), 5-gallon cans, small glass or plastic vials and/or one gallon glass or plastic bottles. The containers may contain absorbent. Polyethylene bags may be taped to form a seal. [273]		
Drum Preparation	No Drum Bag. May or may not include a 10 or 90 mil polyethylene liner. [273]		
Primary Waste Parameter(s)	Cellulosics, plastic, other inorganic materials **NOTE:** *Any amount of other debris waste parameters may be present.*		
Special Notes	PCB waste with any observable liquid is prohibited from disposal at WIPP. Laboratory waste contains waste that was generated as a result of the analysis of INTEC waste that may contain or may have been derived from unused hydrofluoric acid product (HWN U134). U134 waste with any observable liquid is prohibited from disposal at WIPP. Based on RTR results, waste may contain prohibited liquids. [242] WMC S5490/IDC IC-526 can only be used if contaminated laboratory waste is >50% by volume debris. If laboratory waste is >50% homogeneous solids, recommend IDC change to IC-603. Any debris waste generated as of the result of analyzing samples of PCB contaminated waste (e.g., IDCs RF-003, BC-203, BN-604, BN-605, RF-743, and RF-746) is PCB waste. PCB waste is prohibited from supercompaction (see INST-FOI-17, Facility Visual Examination Operations). IDC IC-526 containers that are not destined for disposal at WIPP (e.g., MLLW) are subject to the Land Disposal Restriction (LDR) program requirements. [241] As a result, mixtures of debris and non-debris waste cannot be classified as debris if the waste generated was the result of intentional mixing of debris and non-debris waste at the laboratory (reference 40 CFR 268.2). A case-by-case evaluation must be conducted for all MLLW IC-526 waste containers. Reference IDC IC-527 for laboratory debris waste that is **not** contaminated with PCBs.		

Heterogeneous Debris Waste		*Unknown/Other Heterogeneous Debris*	*S5000*
S5490	**IW-526**	**Laboratory PCB Debris Waste**	
WIPP Status	WIPP Candidate		
Waste Description	Secondary waste generated in the laboratory from analyzing TRU waste samples. This waste includes debris waste (e.g., beakers, vials) that is or may be contaminated with PCBs. Waste may also contain <50% by volume homogeneous solids including absorbed/solidified laboratory extraction liquids, sample residues (leached solids remaining after extraction), and returned unused sample material. This waste was generated at the analytical laboratory located at RWMC and operated by CH2M-WG. [222, 223, 273]		
Inner Packaging	One or more plastic bags (e.g., polyethylene bag or Ziploc-type inner bag with a polyethylene bag over it), 5-gallon cans, small glass or plastic vials and/or one gallon glass or plastic bottles. The containers may contain absorbent. Polyethylene bags may be taped to form a seal. [273]		
Drum Preparation	No Drum Bag. May or may not include a 10 or 90 mil polyethylene liner. [273]		
Primary Waste Parameter(s)	Cellulosics, plastic, other inorganic materials **NOTE:** *Any amount of other debris waste parameters may be present.*		
Special Notes	PCB waste with any observable liquid is prohibited from disposal at WIPP. Laboratory waste contains waste that was generated as a result of the analysis of waste that may contain or may have been derived from unused hydrofluoric acid product (HWN U134). U134 waste with any observable liquid is prohibited from disposal at WIPP. WMC S5490/IDC IW-526 can only be used if contaminated laboratory waste is >50% by volume debris. If laboratory waste is >50% by volume homogeneous solids, recommend IDC change to IW-603. Any debris waste generated as of the result of analyzing samples of PCB contaminated waste (e.g., IDCs RF-003, BC-203, BN-604, BN-605, RF-743, and RF-746) is PCB waste. PCB waste is prohibited from supercompaction (see INST-FOI-17, Facility Visual Examination Operations). IDC IW-526 containers that are not destined for disposal at WIPP (e.g., MLLW) are subject to the LDR program requirements. [241] As a result, mixtures of debris and non-debris waste cannot be classified as debris if the waste generated was the result of intentional mixing of debris and non-debris waste at the laboratory (reference 40 CFR 268.2). A case-by-case evaluation must be conducted for all MLLW IW-526 waste containers. Reference IDC IW-527 for laboratory debris waste that is not PCB contaminated.		

Heterogeneous Debris Waste		*Unknown/Other Heterogeneous Debris*	*S5000*
S5490	**BN-527**	**Lab Non-PCB Debris Waste (not P/U-listed)**	
WIPP Status	WIPP Candidate		
Waste Description	Secondary waste generated in the laboratory from analyzing TRU waste samples. This waste includes debris waste (e.g., beakers, vials) that is **not** contaminated with PCBs. Waste may also contain <50% by volume homogeneous solids including absorbed/solidified laboratory extraction liquid, sample residues (leached solids remaining after extraction), and returned unused sample material. This waste was generated at the analytical laboratory located at RWMC and operated by AMWTP.		
Inner Packaging	See INST-OI-24 [116]		
Drum Preparation	See INST-OI-24 [116]		
Primary Waste Parameter(s)	Cellulosics, plastic, other inorganic materials **NOTE**: *Any amount of other debris waste parameters may be present.*		
Special Notes	WMC S5490/IDC BN-527 can only be used if contaminated laboratory waste is >50% by volume debris. If laboratory waste is >50% homogeneous solids, recommend IDC change to BN-599. IDC BN-527 containers that are not destined for disposal at WIPP (e.g., MLLW) are subject to the LDR program requirements. [241] As a result, mixtures of debris and non-debris waste cannot be classified as debris if the waste generated was the result of intentional mixing of debris and non-debris waste at the laboratory (reference 40 CFR 268.2). A case-by-case evaluation must be conducted for all MLLW BN-527 waste containers. Reference IDC BN-526 for laboratory debris waste that is or may be contaminated with PCBs.		

Heterogeneous Debris Waste		*Unknown/Other Heterogeneous Debris*	*S5000*
S5490	**IC-527**	**Laboratory Non-PCB Debris Waste**	
WIPP Status	WIPP Candidate		
Waste Description	Secondary waste generated in the laboratory from analyzing TRU waste samples. This waste includes debris waste (e.g., beakers, vials) that is **not** contaminated with PCBs. Waste may also contain <50% by volume homogeneous solids including absorbed/solidified laboratory extraction liquid, sample residues (leached solids remaining after extraction), and returned unused sample material. This waste was generated at the analytical laboratory located at INTEC. [222, 273]		
Inner Packaging	One or more plastic bags (e.g., polyethylene bag or Ziploc-type inner bag with a polyethylene bag over it), 5-gallon cans, small glass or plastic vials and/or one gallon glass or plastic bottles. The containers may contain absorbent. Polyethylene bags may be taped to form a seal. [273]		
Drum Preparation	No drum bag. May or may not include a 10 or 90 mil polyethylene liner. [273]		
Primary Waste Parameter(s)	Cellulosics, plastic, other inorganic materials **NOTE:** *Any amount of other debris waste parameters may be present.*		
Special Notes	Laboratory waste contains waste that was generated as a result of the analysis of waste that may contain or may have been derived from unused hydrofluoric acid product (HWN U134). U134 waste with any observable liquid is prohibited from disposal at WIPP. WMC S5490/IDC IC-527 can only be used if contaminated laboratory waste is >50% by volume debris. If laboratory waste is >50% homogeneous solids, recommend IDC change to IC-603. Reference IDC IC-526 for laboratory debris waste that is or may be contaminated with PCBs.		

Heterogeneous Debris Waste		*Unknown/Other Heterogeneous Debris*	*S5000*
S5490	**IW-527**	**Laboratory Non-PCB Debris Waste**	
WIPP Status	WIPP Candidate		
Waste Description	Secondary waste generated in the laboratory from analyzing TRU waste samples. This waste includes debris waste (e.g., beakers, vials) that is **not** contaminated with PCBs. Waste may also contain <50% by volume homogeneous solids including absorbed/solidified laboratory extraction liquid, sample residues (leached solids remaining after extraction), and returned unused sample material. This waste was generated at the analytical laboratory located at RWMC and operated by CH2M-WG. [222, 224, 273]		
Inner Packaging	One or more plastic bags (e.g., polyethylene bag or Ziploc-type inner bag with a polyethylene bag over it), 5-gallon cans, small glass or plastic vials and/or one gallon glass or plastic bottles. The containers may contain absorbent. Polyethylene bags may be taped to form a seal.[273]		
Drum Preparation	No Drum Bag. May or may not include a 10 or 90 mil polyethylene liner. [273]		
Primary Waste Parameter(s)	Cellulosics, plastic, other inorganic materials **NOTE:** *Any amount of other debris waste parameters may be present.*		
Special Notes	Laboratory waste contains waste that was generated as a result of the analysis of waste that may contain or may have been derived from unused hydrofluoric acid product (HWN U134). U134 waste with any observable liquid is prohibited from disposal at WIPP. WMC S5490/IDC IW-527 can only be used if contaminated laboratory waste is >50% by volume debris. If laboratory waste is >50% by volume homogeneous solids, recommend IDC change to IW-603. Reference IDC IW-526 for laboratory debris waste that is or may be contaminated with PCBs.		

N/A		*N/A*	*N/A*
N/A	**BN-528**	**TRU PCB Liquids**	
WIPP Status	WIPP Candidate (after absorption)		
Waste Description	TRU liquids generated during retrieval, characterization, or treatment operations (e.g., removal of small containers of prohibited liquid or collection of liquids during retrieval) that may contain PCBs.		
Packaging	Not currently available		
Drum Preparation	Not currently available		
Primary Waste Parameter(s)	N/A		
Special Notes	An IDC change to IDC BN-529 is allowed if the analytical results confirm that suspect PCB waste is not PCB waste. Treatment of PCB liquids is not authorized for this IDC under the approved AMWTP RBDA. Concurrence by EPA must be obtained prior to absorption.		

N/A	*N/A*		*N/A*
N/A	**BN-529**	**TRU non-PCB Liquids**	
WIPP Status	WIPP Candidate (after absorption)		
Waste Description	TRU liquids generated during retrieval, characterization, or treatment operations (e.g., removal of small containers of prohibited liquid or collection of liquids during retrieval) verified to be non-PCB waste.		
Packaging	Not currently available		
Drum Preparation	Not currently available		
Primary Waste Parameter(s)	N/A		
Special Notes	BN-529 does **not** include squeezants generated during supercompaction (reference IDC BN-518).		

N/A	*N/A*		*N/A*
N/A	**BN-530**	**MLLW Non-combustible Liquid**	
WIPP Status	MLLW – Not a WIPP Candidate		
Waste Description	Free flowing liquid without BTU content.		
Inner Packaging	See INST-OI-24 [116]		
Drum Preparation	See INST-OI-24 [116]		
Primary Waste Parameter(s)	N/A		
Special Notes	TBD		

Inorganic Non-Metal		*Debris Waste*	*S5000*
S5000	**MO-530**	**Compacted Waste**	
WIPP Status	Waste not currently included in AMWTP scope for WIPP disposal		
Waste Description	*Not currently summarized*		
Inner Packaging	*Not currently summarized*		
Drum Preparation	*Not currently summarized*		
Primary Waste Parameter(s)	*Not currently summarized*		
Special Notes	TBD		

N/A	*N/A*	*N/A*
N/A	**BN-531**	**LLW Combustible Liquid**
WIPP Status	LLW - Not a WIPP Candidate	
Waste Description	Waste includes shredder oil and BROKK oil (other than BROKK pedestal oil, BN-534), and other oil determined to be LLW.	
Inner Packaging	See INST-OI-24 [116]	
Drum Preparation	See INST-OI-24 [116]	
Primary Waste Parameter(s)	N/A	
Special Notes	TBD	

N/A	*N/A*	*N/A*
N/A	**BN-534**	**Organic Liquid from Maintenance Activities**
WIPP Status	WIPP Candidate (after absorption)	
Waste Description	This waste includes non-PCB contaminated organic liquids generated during AMWTP maintenance operations (e.g., draining the Brokk pedestal).	
Inner Packaging	See INST-OI-24 [116]	
Drum Preparation	See INST-OI-24 [116]	
Primary Waste Parameter(s)	N/A	
Special Notes	TBD	

N/A	*N/A*	*N/A*
N/A	**BN-535**	**MLLW Combustible Liquid**
WIPP Status	MLLW - Not a WIPP Candidate	
Waste Description	Free flowing liquid with BTU content. Waste includes oil determined to be MLLW. Does **not** include LLW combustible liquid (BN-531) and Brokk pedestal oil (BN-534).	
Inner Packaging	See INST-OI-24 [116]	
Drum Preparation	See INST-OI-24 [116]	
Primary Waste Parameter(s)	N/A	
Special Notes	TBD	

Lead/Cadmium Metal		*Debris Waste*	*S5000*
S5000	**MO-535**	**Compacted Waste/Lead**	
WIPP Status	Waste not currently included in AMWTP scope for WIPP disposal		
Waste Description	*Not currently summarized*		
Inner Packaging	*Not currently summarized*		
Drum Preparation	*Not currently summarized*		
Primary Waste Parameter(s)	*Not currently summarized*		
Special Notes	TBD		

Heterogeneous Debris Waste		*Unknown/Other Heterogeneous Debris*	*S5000*
S5490	**BN-536**	**TRU Empty Containers with PCBs**	
WIPP Status	WIPP Candidate		
Waste Description	Empty cargo containers, boxes, 55-gallon drums or 83-/85-gallon overpacks generated during the retrieval, repack, or treatment processes that may contain PCBs. [116]		
Inner Packaging	N/A		
Drum Preparation	N/A		
Primary Waste Parameter(s)	Iron-based metals/alloys, (cellulosics for wooden boxes)		
Special Notes	Treatment (e.g., supercompaction) not authorized for this IDC (PCBs). An IDC change to IDC BN-537 is allowed for empty cargos if confirmed that suspect PCB waste is not PCB waste.		

Heterogeneous Debris Waste		*Unknown/Other Heterogeneous Debris*	*S5000*
S5490	**BN-537**	**TRU Empty Containers**	
WIPP Status	WIPP Candidate		
Waste Description	Empty cargo containers, boxes, 55-gallon drums or 83-/85-gallon overpacks generated during the retrieval, repack, or treatment process verified to be non-PCB waste. [116]		
Inner Packaging	N/A		
Drum Preparation	N/A		
Primary Waste Parameter(s)	Iron-based metals/alloys, (cellulosics for wooden boxes)		
Special Notes	TBD		

Heterogeneous Debris Waste		*Unknown/Other Heterogeneous Debris*	*S5000*
S5490	**BN-538**	**Oversized Debris Items From Supercompactor Facility**	
WIPP Status	WIPP Candidate		
Waste Description	Oversized debris waste items that are transferred out of the facility via the shredder chute. Examples of oversized waste items include hardened metals, milling tables, and large diameter solid bars. The debris items may also include large tools or equipment from the Facility. The waste also includes shredded boxes (wooden and steel) used as filler material. The waste may include gloves, wipes, plastic, PPE, bag cutters, tape, and sleeve stub generated during the packaging operations.		
Inner Packaging	Debris items are wrapped in plastic.		
Box Preparation	Metal shredder box with docking sleeve		
Primary Waste Parameter(s)	Iron-Based Metals/Alloys, Cellulosics **NOTE:** *Any amount of other debris waste parameters may be present.*		
Special Notes	Shredded boxes are used as "packaging" to fill void volume. This waste does not include items that contain oil filled equipment or waste that does not meet the definition of debris per 40 CFR 268.2 (e.g., lead acid batteries, elemental lead). Oversized debris waste items include only those IDCs identified in RPT-TRUW-83 that are authorized as feed to the supercompactor. This is waste generated in WMF-676 that is directly related to the S/C operations from processing containers assigned IDCs listed in RPT-TRUW-83 as approved feed stock.		

Heterogeneous Debris Waste		*Unknown/Other Heterogeneous Debris*	*S5000*
S5490	**BN-539**	**TRU Radioactive Only Debris Waste**	
WIPP Status	WIPP Candidate		
Waste Description	Heterogeneous debris waste generated in WMF-676 from the treatment of RCRA empty containers including shredded boxes constructed of metal, wood, and fiber glassed reinforced plywood. Waste may also include associated PPE, bagging, leather gloves, wipes, and cutting tools.		
Inner Packaging	*Not currently summarized*		
Drum/Box Preparation	*Not currently summarized*		
Primary Waste Parameter(s)	Iron-based metals/alloys, cellulosics, plastic (waste materials)		
Special Notes	This is waste generated in WMF-676 that is directly related to the S/C operations from processing containers assigned IDCs listed in RPT-TRUW-83 as approved feed stock.		

Heterogeneous Debris Waste	*Unknown/Other Heterogeneous Debris*	*S5000*
S5490	**BN-540**	**Oversized Debris Items From Supercompactor Facility**
WIPP Status	WIPP Candidate	
Waste Description	Oversized debris waste items from boxed waste that are packaged and transferred out of the boxlines because they are too large or cannot be size reduced for supercompaction. Examples of oversized waste items include hardened metals, milling tables, and large diameter solid bars. The debris items may also include large tools or equipment from the Facility. The waste may include gloves, wipes, plastic, and PPE generated during the packaging operations. May contain <50% commingled non-debris.	
Inner Packaging	TBD	
Box Preparation	TBD	
Primary Waste Parameter(s)	Iron-based metals/alloys, cellulosics, Any amount of other debris waste parameters may be present.	
Special Notes	Oversized debris waste items include only those IDCs identified in RPT-TRUW-83 that are authorized as feed to the supercompactor.	

Heterogeneous Debris Waste	*Debris Waste*	*S5000*
S5000	**MO-540**	**Non-Compacted Waste**
WIPP Status	Waste not currently included in AMWTP scope for WIPP disposal	
Waste Description	*Not currently summarized*	
Inner Packaging	*Not currently summarized*	
Drum Preparation	*Not currently summarized*	
Primary Waste Parameter(s)	*Not currently summarized*	
Special Notes	TBD	

N/A	*N/A*	*N/A*
N/A	**BN-541**	**Debris SDOP to Supercompactor**
WIPP Status	N/A - Overpack Container	
Waste Description	All types of debris packaged in 55-gallon drums or larger that have been over-packed into a box or placed on a pallet for processing in AMWTF.	
Inner Packaging	All inner packaging is breached during size reduction or compaction.	
Box Preparation	No liners	
Primary Waste Parameter(s)	N/A – overpack container	
Special Notes	IDC BN-541 is reserved to track boxes packaged with uncharacterized debris drums for processing in AMWTF and is confirmed by RTR that all containers are > 50% debris. VE confirms that each container's contents are RPT-TRUW-83 IDCs. SDOP is a six-drum overpack wood box, EMOP is an eight-55-gallon drum metal pallet, and an SMOP is a six-85-gallon drum metal pallet. Only those IDCs identified in RPT-TRUW-83 are authorized as feed to the supercompactor and used as SDOP, EMOP, or SMOP inner container feedstock.[6, 186]	

Heterogeneous Debris Waste		*Debris Waste*	*S5000*
S5000	**MO-545**	**WEP Shielded Waste**	
WIPP Status	Waste not currently included in AMWTP scope for WIPP disposal		
Waste Description	*Not currently summarized*		
Inner Packaging	*Not currently summarized*		
Drum Preparation	*Not currently summarized*		
Primary Waste Parameter(s)	*Not currently summarized*		
Special Notes	TBD		

Heterogeneous Debris Waste		*Unknown/Other Heterogeneous Debris*	*S5000*
S5490	**BN-550**	**Supercompacted Debris**	
WIPP Status	WIPP Candidate		
Waste Description	All types of TRU waste derived from the IDCs listed in RPT TRUW-83 that is compacted at the AMWTP and will be shipped to WIPP. Waste may also contain <50% by volume homogeneous solids or soil.		
Inner Packaging	All inner packaging is breached during compaction		
Drum Preparation	100-gallon product drums typically containing multiple compacted 55-gallon drums of feedstock (i.e., pucks) associated with the IDCs listed in RPT-TRUW-83. [186]		
Box Preparation	Drums of this waste may be direct loaded into SWBs as an alternate packaging configuration for shipment to WIPP.		
Primary Waste Parameter(s)	Iron-based metals/alloys, cellulosics, plastic (waste materials), other inorganic materials, rubber, other metals, aluminum-based metals/alloys		
Special Notes	The puck includes catch pans (if used) as well as the compacted feed drum. [42] Only those IDCs identified in RPT-TRUW-83 are authorized as feed to the WIPP approved supercompacted waste stream.[186]		

Solidified Organic		*Homogeneous Solids*	*S3000*
S3000	**MO-550**	**Solidified Oil**	
WIPP Status	Waste not currently included in AMWTP scope for WIPP disposal		
Waste Description	*Not currently summarized*		
Inner Packaging	*Not currently summarized*		
Drum Preparation	*Not currently summarized*		
Primary Waste Parameter(s)	*Not currently summarized*		
Special Notes	TBD		

Heterogeneous Debris Waste		*Unknown/Other Heterogeneous Debris*	*S5000*
S5490	**BN-597**	**P/U-listed Lab PCB Debris Waste**	
WIPP Status	WIPP Candidate		
Waste Description	Secondary waste generated in the laboratory from analyzing TRU waste samples that are characterized with P and/or U-listed HWNs and that are or may be contaminated with PCBs. Waste may also contain <50% by volume homogeneous solids including absorbed/solidified laboratory extraction liquids, sample residues (leached solids remaining after extraction), and returned unused sample material. This waste is generated at the analytical laboratory located at RWMC and operated by AMWTP.		
Inner Packaging	See INST-OI-24 [116]		
Drum Preparation	See INST-OI-24 [116]		
Primary Waste Parameter(s)	Cellulosics, plastic, other inorganic materials **NOTE:** *Any amount of other debris waste parameters may be present.*		
Special Notes	PCB waste with any observable liquid is prohibited from disposal at WIPP. WMC S5490/IDC BN-597 can only be used if contaminated laboratory waste is >50% by volume debris. If laboratory waste is >50% homogeneous solids, recommend IDC change to BN-598. IDC BN-597 containers that are not destined for disposal at WIPP (e.g., MLLW) are subject to the Land Disposal Restriction (LDR) program requirements. [241] As a result, mixtures of debris and non-debris waste with BN-597 waste cannot be classified as debris if the waste generated was the result of intentional mixing of debris and non-debris waste at the laboratory (reference 40 CFR 268.2). A case-by-case evaluation must be conducted for all MLLW BN-597 waste containers. Reference IDC BN-525 for laboratory debris waste that is **not** contaminated with PCBs.		

Solidified Organics		*Unknown/Other Homogeneous Solids*	*S3000*
S3900	**BN-598**	**P/U-listed Lab PCB Homogeneous Solids Waste**	
WIPP Status	WIPP Candidate		
Waste Description	Secondary waste generated in the laboratory from analyzing TRU waste samples that are characterized with P and/or U-listed HWNs and that are or may be contaminated with PCBs. The waste is comprised of analytical liquids (e.g., extraction liquids) that have been absorbed or solidified with imbiber beads, Acid Bond 660, or other absorbent/solidification agents. These liquids were generated during analysis of TRU waste samples. The waste may contain sample residues (leached solids remaining after extraction) and returned unused sample material. Waste may also contain <50% by volume debris items (e.g. vials). This waste was generated at the analytical laboratory located at RWMC and operated by AMWTP.		
Inner Packaging	See INST-OI-24 [116]		
Drum Preparation	See INST-OI-24 [116]		
Primary Waste Parameter(s)	Organic Matrix, Inorganic Matrix, Other Inorganic Materials (see Special Notes) **NOTE:** *Other waste parameters may be present because waste may contain debris items.*		
Special Notes	PCB waste with any observable liquid is prohibited from disposal at WIPP. Organic Matrix may be conservatively assigned to this waste. WMC S3900/IDC BN-598 can only be used if >50% by volume homogeneous solids (e.g., absorbed/solidified liquids, sample residues, or unused solid samples). If >50% by volume debris, recommend IDC change to BN-597. Reference IDC BN-602 for laboratory homogeneous solids waste that is **not** contaminated with PCBs.		

Solidified Organics		*Unknown/Other Homogeneous Solids*	*S3000*
S3900	**BN-599**	**Lab Non- PCB Homogenous Solids Waste (not P/U-listed)**	
WIPP Status	WIPP Candidate		
Waste Description	The waste is comprised of analytical liquids (e.g., extraction liquids) that have been absorbed or solidified with imbiber beads, Acid Bond 660, or other absorbent/solidification agents that are not contaminated with PCBs. These liquids were generated during analysis of TRU waste samples. The waste may contain sample residues (leached solids remaining after extraction) and returned unused sample material. Waste may also contain <50% by volume debris items (e.g. vials). This waste was generated at the analytical laboratory located at RWMC and operated by AMWTP.		
Inner Packaging	See INST-OI-24 [116]		
Drum Preparation	See INST-OI-24 [116]		
Primary Waste Parameter(s)	Organic matrix, inorganic matrix, other inorganic materials (see Special Notes) **NOTE:** *Other waste parameters may be present because waste may contain debris items.*		
Special Notes	Organic Matrix may be conservatively assigned to this waste. WMC S3900/IDC BN-599 can only be used if >50% by volume homogeneous solids (e.g., absorbed/solidified liquids, sample residues, or unused solid samples). If >50% by volume debris, recommend IDC change to BN-527. Reference IDC BN-603 for laboratory homogeneous solids waste that is or may be contaminated with PCBs.		

Heterogeneous Debris Waste		*Unknown/Other Heterogeneous Debris*	*S5000*
S5490	**BN-600**	**WMF-676 PCB Contaminated Debris**	
WIPP Status	WIPP Candidate		
Waste Description	PCB contaminated heterogeneous debris generated in WMF-676 from the remediation of PCB prohibited wastes (e.g. removal, cleanout, spill cleanup, or treatment of PCB waste/items from box lines, SCW, or DWPG). This is waste generated in WMF-676 that is directly related to the S/C operations from processing containers assigned IDCs listed in RPT-TRUW-83 as approved feed stock. The waste may include PCB electrical equipment (e.g., capacitors, ballast, transformers), PIG® mats, blankets, and pillows; size-reduced drum liners and empty containers; PPE; wipes, and supercompactor feedstock debris that is PCB contaminated due to PCB spills (e.g., paper and rags; gloves; wipes; asbestos; PPE; plastic and rubber items; filters; leaded gloves, aprons, bricks, and sheeting; metal with and without lead or cadmium; floor tiles, piping, sheet rock, insulation, and glass; raschig rings; crucibles; fire brick; wood; Plexiglas®; Benelex®; pieces of equipment and tools; graphite; grit; and asphalt and concrete). The waste may also contain < 50% by volume of commingled non-debris (e.g., soil, sludge, and particulate absorbents).		
Inner Packaging	Waste may be single or double bagged in small poly bags or waste may be direct loaded into the waste drum		
Drum Preparation	One poly drum bag		
Primary Waste Parameter(s)	Iron-based metals/alloys, cellulosics, plastic (waste materials) **NOTE:** *Other debris waste parameters may be present in the waste.*		
Special Notes	PCB waste with any observable liquid is prohibited from disposal at WIPP. Based on RTR results, waste may contain prohibited liquids or impenetrable objects. Based on VE results, waste may also contain sharp objects. [242] Supercompaction is not authorized for this PCB IDC. IDC BN-600 does **not** include heterogeneous PCB debris waste generated outside of WMF-676 (reference IDC BN-604).		

Heterogeneous Debris Waste		*Unknown/Other Heterogeneous Debris*	*S5000*
S5490	**CW-600**	**Sludge Repackage Project PCB Contaminated Debris**	
WIPP Status	MLLW – Not a WIPP Candidate		
Waste Description	PCB contaminated heterogeneous debris generated as a result of repackaging AMWTP PCB-contaminated sludge at the INL SDA. The waste may include PCB electrical equipment (e.g., capacitors, ballast, transformers), size-reduced drum liners and empty containers; and PPE. The waste may also contain < 50% by volume of non-debris (e.g., soil, homogeneous solids, and particulate absorbents).		
Inner Packaging	Waste may be single or double bagged in small poly bags or waste may be direct loaded into the waste drum		
Drum Preparation	One poly drum bag		
Primary Waste Parameter(s)	Iron-based metals/alloys, cellulosics, plastic (waste materials) **NOTE:** *Other debris waste parameters may be present in the waste.*		
Special Notes	The waste may contain prohibited items (e.g., sealed containers, prohibited liquids, impenetrable objects, pressurized containers, and sharp objects.) Supercompaction is not authorized for this PCB IDC.		

Heterogeneous Debris Waste		*Heterogeneous Debris*	*S5000*
S5400	**IC-601**	**Alpha Low Level Lab. WIPP Analytical Waste**	
WIPP Status	WIPP Candidate		
Waste Description	Heterogeneous debris including, for example, filter paper, PPE, plastic, and glass generated at INTEC in the Alpha Low Level Laboratory from laboratory operations to support WIPP. The waste may also include <50% sample residues and absorbent such as diatomaceous earth. [273]		
Inner Packaging	One or more plastic bags (e.g., polyethylene bag or Ziploc-type inner bag with a polyethylene bag over it), 5-gallon cans, small glass or plastic vials and/or one gallon glass or plastic bottles. The containers may contain absorbent. Polyethylene bags may be taped to form a seal.[273]		
Drum Preparation	No Drum Bag. May or may not include a 10 or 90 mil polyethylene liner. [273]		
Primary Waste Parameter(s)	Cellulosics, plastic (waste materials), other inorganic materials **NOTE:** *Other debris waste parameters may be present in the waste.*		
Special Notes	May contain PCB items.		

Solidified Organics		*Unknown/Other Homogeneous Solids*	*S3000*
S3900	**BN-602**	**P/U-listed Lab Non-PCB Homogeneous Solids Waste**	
WIPP Status	WIPP Candidate		
Waste Description	Secondary waste generated in the laboratory from analyzing TRU waste samples that are characterized with P and/or U-listed HWNs that is not PCB contaminated. The waste is comprised of analytical liquids (e.g., extraction liquids) that have been absorbed or solidified with imbiber beads, Acid Bond 660, or other absorbent/solidification agents. These liquids were generated during analysis of TRU waste samples. The waste may contain sample residues (leached solids remaining after extraction) and returned unused sample material. Waste may also contain <50% by volume debris items (e.g. vials). This waste was generated at the analytical laboratory located at RWMC and operated by AMWTP.		
Inner Packaging	See INST-OI-24 [116]		
Drum Preparation	See INST-OI-24 [116]		
Primary Waste Parameter(s)	Organic matrix, inorganic matrix, other inorganic materials (see Special Notes) **NOTE:** *Other waste parameters may be present because waste may contain debris items.*		
Special Notes	Organic Matrix may be conservatively assigned to this waste. WMC S3900/IDC BN-602 can only be used if >50% by volume homogeneous solids (e.g., absorbed/solidified liquids, sample residues, or unused solid samples). If >50% by volume debris, recommend IDC change to BN-525. Reference IDC BN-598 for laboratory homogeneous solids waste that is or may be contaminated with PCBs.		

Solidified Organics		*Unknown/Other Homogeneous Solids*	*S3000*
S3900	**IC-602**	**INTEC Laboratory Homogeneous Solids Waste (P/U-listed)**	
WIPP Status	Not a WIPP Candidate – Expired IDC (see Special Notes)		
Waste Information	See IDC IC-603		
Special Notes	IC-602 is identical to IC-603 and an IDC change to IC-603 is recommended. IDCs IC-602 and IC-603 were associated with INTEC/RWMC laboratory operations and may contain or may have been derived from unused hydrofluoric acid product (HWN U134). U134 waste with any observable liquid is prohibited from disposal at WIPP. [273]		

Solidified Organics		*Unknown/Other Homogeneous Solids*	*S3000*
S3900	**BN-603**	**Lab PCB Homogenous Solids Waste (not P/U-listed)**	
WIPP Status	WIPP Candidate		
Waste Description	The waste is comprised of analytical liquids (e.g., extraction liquids) that have been absorbed or solidified with imbiber beads, Acid Bond 660, or other absorbent/solidification agents and that is or may be contaminated with PCBs. These liquids were generated during analysis of TRU waste samples. The waste may contain sample residues (leached solids remaining after extraction) and returned unused sample material. Waste may also contain <50% by volume debris items (e.g. vials). This waste was generated at the analytical laboratory located at RWMC and operated by AMWTP.		
Inner Packaging	See INST-OI-24 [116]		
Drum Preparation	See INST-OI-24 [116]		
Primary Waste Parameter(s)	Organic matrix, inorganic matrix, other inorganic materials (see Special Notes) **NOTE:** *Other waste parameters may be present because waste may contain debris items.*		
Special Notes	PCB waste with any observable liquid is prohibited from disposal at WIPP. Any homogeneous solids waste generated as of the result of analyzing samples of PCB contaminated waste (e.g., IDCs RF-003, BC-203, BN-604, BN-605, RF-743, and RF-746) is PCB waste. Organic Matrix may be conservatively assigned to this waste. WMC S3900/IDC BN-603 can only be used if >50% by volume homogeneous solids (e.g., absorbed/solidified liquids, sample residues, or unused solid samples). If >50% by volume debris, recommend IDC change to BN-526. Reference IDC BN-599 for laboratory homogeneous solids waste that is **not** contaminated with PCBs.		

Solidified Organics		*Unknown/Other Homogeneous Solids*	*S3000*
S3900	**IC-603**	**Laboratory Homogeneous Solids Waste**	
WIPP Status	WIPP Candidate		
Waste Description	Analytical liquids (e.g., extraction liquids) that have been absorbed or solidified with imbiber beads, Acid Bond 660, or other absorbent/solidification agents. These liquids were generated during analysis of TRU waste samples. The waste may contain sample residues (leached solids remaining after extraction) and returned unused sample material. Waste may also contain <50% by volume debris items (e.g. vials). This waste was generated at the analytical laboratory located at INTEC. [222, 273]		
Inner Packaging	One or more plastic bags (e.g., polyethylene bag or Ziploc-type inner bag with a polyethylene bag over it), 5-gallon cans, small glass or plastic vials and/or one gallon glass or plastic bottles. The containers may contain absorbent. Polyethylene bags may be taped to form a seal. [273]		
Drum Preparation	May or may not include a 10 or 90 mil polyethylene liner. [273]		
Primary Waste Parameter(s)	Organic matrix, inorganic matrix, other inorganic materials (see Special Notes) **NOTE**: *Other waste parameters may be present because waste may contain debris items.*		
Special Notes	Based on RTR results, waste may contain prohibited liquids. [242] Organic Matrix may be conservatively assigned to this waste. WMC S3900/IDC IC-603 can only be used if >50% by volume homogeneous solids (e.g., absorbed/solidified liquids, sample residues, or unused solid samples). If >50% by volume debris, recommend a or b: a. If waste is not PCB contaminated, recommend change to IDC IC-527. b. If waste is or suspected to be PCB contaminated, recommend change to IDC IC-526. This IDC is conservatively managed as PCB contaminated because it may contain waste generated as of the result of analyzing samples of PCB contaminated waste (e.g., IDCs RF-003, BC-203, BN-604, BN-605, RF-743, or RF-746). Laboratory waste contains waste generated as a result of the analysis of INTEC waste that may contain or may have been derived from unused hydrofluoric acid product (HWN U134). U134 waste with any observable liquid is prohibited from disposal at WIPP. [273]		

Solidified Organics		*Unknown/Other Homogeneous Solids*	*S3000*
S3900	**IR-603**	**ATR CH-TRU Absorbed Liquids**	
WIPP Status	WIPP Candidate		
Waste Description	This ATR TRU waste was generated from disposal of 18 actinide standards that were prepared at ATR during the 1950 to 1960 time period. The standards were prepared in dilute nitric acid solutions contained in small glass containers (ampoules, vials or bottles). They were individually bagged and liquids were absorbed onto diatomaceous earth and neutralized with potassium phosphate powder during packaging.		
Inner Packaging	Individual poly bags		
Drum Preparation	90-mil polyethylene drum liner in a 55-gal drum overpacked into an 85-gallon drum.		
Primary Waste Parameter(s)	Inorganic Matrix, plastic, other inorganic materials, other waste parameters may be present because waste may contain debris items.		
Special Notes	TBD		

Solidified Organics		*Unknown/Other Homogeneous Solids*	*S3000*
S3900	**IW-603**	**Laboratory Homogeneous Solids Waste**	
WIPP Status	WIPP Candidate		
Waste Description	Analytical liquids (e.g., extraction liquids) that have been absorbed or solidified with imbiber beads, Acid Bond 660, or other absorbent/solidification agents. These liquids were generated during analysis of TRU waste samples. The waste may contain sample residues (leached solids remaining after extraction) and returned unused sample material. Waste may also contain <50% by volume debris items (e.g. vials). This waste was generated at the analytical laboratory located at RWMC. [222, 225, 273]		
Inner Packaging	May be packaged in one or more plastic bags (e.g., polyethylene bag or Ziploc-type inner bag with a polyethylene bag over it), 5-gallon cans, small glass or plastic vials and/or one gallon glass or plastic bottles. The containers may contain absorbent. Polyethylene bags may be taped to form a seal. [273]		
Drum Preparation	May or may not include a 10 or 90 mil polyethylene liner. [273]		
Primary Waste Parameter(s)	Organic matrix, inorganic matrix, other inorganic materials (see Special Notes) **NOTE**: *Other waste parameters may be present because waste may contain debris items.*		
Special Notes	Organic Matrix may be conservatively assigned to this waste. WMC S3900/IDC IW-603 can only be used if >50% by volume homogeneous solids (e.g., absorbed/solidified liquids, sample residues, or unused solid samples). If >50% by volume debris, recommend a or b: a. If waste is not PCB contaminated, recommend change to IDC IW-527. b. If waste is or suspected to be PCB contaminated, recommend change to IDC IW-526. This IDC is conservatively managed as PCB contaminated because it may contain waste generated as of the result of analyzing samples of PCB contaminated waste (e.g., IDCs RF-003, BC-203, BN-604, BN-605, RF-743, or RF-746). Laboratory waste contains waste generated as a result of the analysis of INTEC waste that may contain or may have been derived from unused hydrofluoric acid product (HWN U134). U134 waste with any observable liquid is prohibited from disposal at WIPP. [273]		

Heterogeneous Debris Waste		*Unknown/Other Heterogeneous Debris*	*S5000*
S5490	**BN-604**	**Debris TSCA/PCB**	
WIPP Status	WIPP Candidate		
Waste Description	Heterogeneous PCB debris waste generated by AMWTP including waste generated during handling of TSCA PCB contaminated waste or waste that contains PCB items other than PCB debris waste generated in WMF-676. Waste includes loose debris that is PCB contaminated or commingled with other PCB waste and debris generated during the cleanup of spills or leaks from waste containers that are PCB waste or are suspected to be PCB contaminated or contain PCB items (e.g., SDA IDCs). May also include intact containers of debris known or suspected to be commingled with PCB waste. Waste may contain any type of debris waste (e.g., cloth, paper, plastics, glass, rubber and metals debris). Waste may also contain <50% by volume commingled soils or homogeneous solids (e.g., sludge).		
Inner Packaging	Waste may be double or triple bagged in small poly bags or waste may be direct loaded into the waste drum		
Drum Preparation	Up to two Poly Drum Bags		
Primary Waste Parameter(s)	Cellulosics, plastics, rubber, Other Inorganic Matrix, iron-based metals/alloys, other metals **NOTE:** *Any amount of other debris waste parameters may be present.*		
Special Notes	PCB waste with any observable liquid is prohibited from disposal at WIPP. Treatment (e.g., supercompaction) is not authorized for this IDC (PCBs). Based on RTR results, waste may contain prohibited liquids (including prohibited liquids in battery) or sharp objects. [242] An IDC change to IDC BN-500 is allowed if the analytical results confirm that suspect PCB waste is not PCB waste. IDC BN-604 does **not** include PCB waste generated in WM-676 (reference IDC BN-600). IDC-BN-604 does **not** include the secondary waste generated from managing waste received under the AMWTP Offsite Waste Program other than spill cleanup waste from SDA waste containers (reference IDC BN-520 for offsite waste).		

Heterogeneous Debris Waste		*Unknown/Other Heterogeneous Debris*	*S5000*
S5400	**IC-604**	**CWI CH Debris from Re-packaging AMWTP RH Debris – RPT-TRUW-83 IDCs**	
WIPP Status	WIPP Candidate		
Waste Description	TBD		
Inner Packaging	TBD		
Drum Preparation	TBD		
Primary Waste Parameter(s)	TBD		
Special Notes	IC-604 includes only waste derived from processing waste assigned IDCs approved in RPT-TRUW-83.		

Solidified Organics		*Absorbed Organic Liquids*	*S3000*
S3114	**BN-605**	**Absorbed Liquids TSCA/PCB**	
WIPP Status	WIPP Candidate		
Waste Description	Organic or aqueous PCB liquids derived from waste containers that were treated using an inorganic particulate material (e.g., Aquaset®, Petroset®, Micro-Cel® E, or other inorganic particulate absorbent material approved by EPA). The absorbed organic or aqueous PCB liquids include prohibited containerized liquids removed and absorbed at SCW. This also includes absorbed PCB liquids from maintenance activities and spill cleanups. [187]		
Inner Packaging	Waste may be direct loaded into waste drum or packaged into 4-liter bottle / triple bagged into small poly bags		
Drum Preparation	Rigid liner if waste direct loaded into waste drum Up to two poly drum bags if waste packaged in 4-liter bottles		
Primary Waste Parameter(s)	Organic matrix		
Special Notes	PCB waste with any observable liquid is prohibited from disposal at WIPP. Those waste specifically identified within the approved AMWTP PCB RBDA, PCB liquids can only be treated (absorbed) and only if the waste is destined for disposal at WIPP (i.e., only applies to TRU PCB liquids). IDC BN-605 does **not** include debris items designed or designated for spill cleanup or absorption of PCB liquids (e.g., rags or PIG® spill response pig/mat products, reference IDCs BN-600, BN-604 or BN-621).		

Heterogeneous Debris Waste		*Unknown/Other Heterogeneous Debris*	*S5000*
S5400	**IC-605**	**CWI CH Debris from Re-Packaging AMWTP RH Debris – Non-RPT-TRUW-83 IDCs**	
WIPP Status	Not a WIPP Candidate		
Waste Description	TBD		
Inner Packaging	TBD		
Drum Preparation	TBD		
Primary Waste Parameter(s)	TBD		
Special Notes	IC-605 includes waste derived from processing waste assigned IDCs not approved in RPT-TRUW-83.		

Solidified Organics		*Unknown/Other Homogeneous Solids*	*S3000*
S3900	**IC-606**	**CWI CH Homogenous Solids from Re-packaging AMWTP RH Debris - WIPP Approved IDCs**	
WIPP Status	WIPP Candidate		
Waste Description	TBD		
Inner Packaging	TBD		
Drum Preparation	TBD		
Primary Waste Parameter(s)	TBD		
Special Notes	IC-606 includes only waste derived from processing waste assigned IDCs approved to ship to WIPP.		

Solidified Organics		*Unknown/Other Homogeneous Solids*	*S3000*
S3900	**IC-607**	**CWI CH Homogenous Solids from Re-packaging AMWTP RH Debris – Non-WIPP Approved IDCs**	
WIPP Status	Not a WIPP Candidate		
Waste Description	TBD		
Inner Packaging	TBD		
Drum Preparation	TBD		
Primary Waste Parameter(s)	TBD		
Special Notes	IC-607 includes waste derived from processing waste assigned IDCs not approved to ship to WIPP.		

N/A	*N/A*		*N/A*
N/A	**BN-607**	**First/Second Stage Sludge Liquid**	
WIPP Status	WIPP Candidate (after absorption and if TRU)		
Waste Description	Group 1 liquids decanted from containers of RF-001, RF-002, and RF-800 sludge waste.[116]		
Inner Packaging	Not currently available		
Drum Preparation	Not currently available		
Primary Waste Parameter(s)	N/A		
Special Notes	To be used for the storage of liquid if required in the future. TRU liquids require absorption for consideration as a WIPP candidate for disposal. An IDC change is required after absorption.		

N/A	*N/A*	*N/A*
N/A	**BN-608**	**Special Setups Liquid**
WIPP Status	WIPP Candidate (after absorption and if TRU)	
Waste Description	Group 2 liquids decanted from containers of RF-004 and RF-802 sludge waste.[116]	
Inner Packaging	Not currently available	
Drum Preparation	Not currently available	
Primary Waste Parameter(s)	N/A	
Special Notes	To be used for the storage of liquid if required in the future. TRU liquids require absorption for consideration as a WIPP candidate for disposal. An IDC change is required after absorption.	

N/A	*N/A*	*N/A*
N/A	**BN-609**	**Building 374 Sludge Liquid**
WIPP Status	WIPP Candidate (after absorption and if TRU)	
Waste Description	Group 3 liquids decanted from containers of RF-007, RF-803, and RF-807 sludge waste.[116]	
Inner Packaging	Not currently available	
Drum Preparation	Not currently available	
Primary Waste Parameter(s)	N/A	
Special Notes	To be used for the storage of liquid if required in the future. TRU liquids require absorption for consideration as a WIPP candidate for disposal. An IDC change is required after absorption.	

N/A	*N/A*	*N/A*
N/A	**BN-610**	**Misc. Homogeneous Solid Liquid**
WIPP Status	WIPP Candidate (after absorption and if TRU)	
Waste Description	Group 4 liquids decanted from containers of RF-806 and RF-425 homogeneous solid waste.[116]	
Inner Packaging	Not currently available	
Drum Preparation	Not currently available	
Primary Waste Parameter(s)	N/A	
Special Notes	To be used for the storage of liquid if required in the future. TRU liquids require absorption for consideration as a WIPP candidate for disposal. An IDC change is required after absorption.	

N/A	*N/A*	*N/A*
N/A	**BN-611**	**Sewage and Pond Sludge Liquid**
WIPP Status	WIPP Candidate (after absorption and if TRU)	
Waste Description	Group 5 liquids decanted from containers of RF-976, RF-978, and RF-995 sludge waste.[116]	
Inner Packaging	Not currently available	
Drum Preparation	Not currently available	
Primary Waste Parameter(s)	N/A	
Special Notes	To be used for the storage of liquid if required in the future. TRU liquids require absorption for consideration as a WIPP candidate for disposal. An IDC change is required after absorption.	

N/A	*N/A*	*N/A*
N/A	**BN-612**	**Caustic Waste Liquid**
WIPP Status	WIPP Candidate (after absorption and if TRU)	
Waste Description	Group 6 liquids decanted from containers of MD-835 waste.[116]	
Inner Packaging	Not currently available	
Drum Preparation	Not currently available	
Primary Waste Parameter(s)	N/A	
Special Notes	To be used for the storage of liquid if required in the future. TRU liquids require absorption for consideration as a WIPP candidate for disposal. An IDC change is required after absorption.	

N/A	*N/A*	*N/A*
N/A	**BN-613**	**Acid Waste Liquid**
WIPP Status	WIPP Candidate (after absorption and if TRU)	
Waste Description	Group 7 liquids decanted from containers of MD-834 waste.[116]	
Inner Packaging	Not currently available	
Drum Preparation	Not currently available	
Primary Waste Parameter(s)	N/A	
Special Notes	To be used for the storage of liquid if required in the future. TRU liquids require absorption for consideration as a WIPP candidate for disposal. An IDC change is required after absorption.	

N/A	*N/A*	*N/A*
N/A	**BN-614**	**Cemented Sludge Liquid**
WIPP Status	WIPP Candidate (after absorption and if TRU)	
Waste Description	Group 11 liquids decanted from containers of MD-836 sludge waste.[116]	
Inner Packaging	Not currently available	
Drum Preparation	Not currently available	
Primary Waste Parameter(s)	N/A	
Special Notes	To be used for the storage of liquid if required in the future. TRU liquids require absorption for consideration as a WIPP candidate for disposal. An IDC change is required after absorption.	

N/A	*N/A*	*N/A*
N/A	**BN-615**	**OASIS Waste Liquid**
WIPP Status	WIPP Candidate (after absorption and if TRU)	
Waste Description	Group 8 liquids decanted from containers of RF-700 and RF-801 sludge waste.[116]	
Inner Packaging	Not currently available	
Drum Preparation	Not currently available	
Primary Waste Parameter(s)	N/A	
Special Notes	To be used for the storage of liquid if required in the future. TRU liquids require absorption for consideration as a WIPP candidate for disposal. An IDC change is required after absorption.	

N/A	*N/A*	*N/A*
N/A	**BN-616**	**Organic Setups PCB Liquid**
WIPP Status	See Special Notes	
Waste Description	Group 9 liquids decanted from containers of RF-003 sludge waste.[116]	
Inner Packaging	Not currently available	
Drum Preparation	Not currently available	
Primary Waste Parameter(s)	N/A	
Special Notes	Decanting of TRU waste is permitted under specified conditions outlined in RBDA (e.g., <10% liquids in parent container and authorized IDC). Assay of liquids required prior to absorption/solidification. Absorption/solidification is prohibited for MLLW liquids classified as ≥500 ppm PCB. Absorption of TRU liquids allowed only if waste is confirmed for disposal at WIPP prior to absorption (reference IDC BN-605 for absorbed PCB liquids). To be used for the storage of liquid if required in the future.	

N/A	*N/A*		*N/A*
N/A	**BN-617**	**Solidified Solutions Liquid**	
WIPP Status	WIPP Candidate (after absorption and if TRU)		
Waste Description	Group 10 liquids decanted from containers of BC-204 solidified solutions waste. [116]		
Inner Packaging	Not currently available		
Drum Preparation	Not currently available		
Primary Waste Parameter(s)	N/A		
Special Notes	To be used for the storage of liquid if required in the future.		

N/A	*N/A*		*N/A*
N/A	**BN-618**	**MLLW Non-debris**	
WIPP Status	MLLW – Not a WIPP Candidate		
Waste Description	Solid media less than 60 mm. Examples include kitty litter and paint chips. This waste does **not** include soil.		
Inner Packaging	See INST-OI-24 [116]		
Drum Preparation	See INST-OI-24 [116]		
Primary Waste Parameter(s)	N/A		
Special Notes	TBD		

N/A	*N/A*		*N/A*
N/A	**BN-619**	**LLW Debris and Non-debris**	
WIPP Status	LLW - Not a WIPP Candidate		
Waste Description	Non-soil solids. Examples include PPE, tarps, and tools. This waste stream does **not** include empty depressurized aerosol cans.		
Inner Packaging	See INST-OI-24 [116]		
Drum Preparation	See INST-OI-24 [116]		
Primary Waste Parameter(s)	N/A		
Special Notes	TBD		

N/A	*N/A*	*N/A*
N/A	**BN-620**	**MLLW Debris**
WIPP Status	MLLW – Not a WIPP Candidate	
Waste Description	Solid media >60 mm in any one dimension. Examples include PPE, tarps, tools, PIG® spill response pig/mat products (used to absorb liquids), etc.	
Inner Packaging	See INST-OI-24 [116]	
Drum Preparation	See INST-OI-24 [116]	
Primary Waste Parameter(s)	N/A	
Special Notes	Based on RTR results, waste may contain prohibited liquids, sharp objects, or impenetrable objects. [242] The addition of liquid to containers of MLLW debris containing pigs or spill mats is prohibited (see INST-OI-24). [116]	

N/A	*N/A*	*N/A*
N/A	**BN-621**	**MLLW PCB Debris**
WIPP Status	MLLW – Not a WIPP Candidate	
Waste Description	Solid media >60 mm in any one dimension that is PCB controlled and labeled. Examples include PCB ballasts and PCB spilled liquids absorbed on debris (e.g., absorbent pads).	
Inner Packaging	See INST-OI-24 [116]	
Drum Preparation	See INST-OI-24 [116]	
Primary Waste Parameter(s)	N/A	
Special Notes	Based on VE results, waste may contain sharp objects. [242] Log sheets must indicate if ballasts are present or how the waste originated if a result of a spill. The addition of liquid to containers of MLLW debris containing pigs or spill mats is prohibited (see INST-OI-24). [116]	

N/A	*N/A*	*N/A*
N/A	**BN-622**	**MLLW PCB Non-debris**
WIPP Status	MLLW – Not a WIPP Candidate	
Waste Description	Solid media less than 60 mm that is PCB controlled and labeled. Examples include kitty litter used to absorb liquids and paint chips. This waste does **not** include soil.	
Inner Packaging	See INST-OI-24 [116]	
Drum Preparation	See INST-OI-24 [116]	
Primary Waste Parameter(s)	N/A	
Special Notes	The addition of liquid to containers of MLLW PCB non-debris is prohibited (see INST-OI-24). [116]	

N/A	*N/A*	*N/A*
N/A	**BN-623**	**MLLW Aerosol Cans and Gas Cylinders with Contents Present**
WIPP Status	MLLW – Not a WIPP Candidate	
Waste Description	Aerosol cans that are non-empty or contain residual pressure. Gas cylinders with valves attached.	
Inner Packaging	See INST-OI-24 [116]	
Drum Preparation	See INST-OI-24 [116]	
Primary Waste Parameter(s)	N/A	
Special Notes	Aerosol cans containing contents or where the pressure cannot be released shall be accumulated separately from other waste types. Use either IDCs BN-620 or BN-624 for empty depressurized aerosol cans and empty gas cylinders without valve mechanism.	

N/A	*N/A*	*N/A*
N/A	**BN-624**	**LLW Empty Aerosol Cans and Empty Gas Cylinders**
WIPP Status	LLW – Not a WIPP Candidate	
Waste Description	Empty aerosol cans and gas cylinders with valves removed.	
Inner Packaging	See INST-OI-24 [116]	
Drum Preparation	See INST-OI-24 [116]	
Primary Waste Parameter(s)	N/A	
Special Notes	Use IDC BN-623 for aerosol cans containing contents or where the pressure cannot be released.	

N/A	*N/A*	*N/A*
N/A	**BN-625**	**LLW Soil**
WIPP Status	LLW - Not a WIPP Candidate	
Waste Description	Earthen media less than 60 mm. Examples include dirt with small amounts of small rocks.	
Inner Packaging	See INST-OI-24 [116]	
Drum Preparation	See INST-OI-24 [116]	
Primary Waste Parameter(s)	N/A	
Special Notes	TBD	

N/A	*N/A*	*N/A*
N/A	**BN-626**	**MLLW Soil**
WIPP Status	MLLW – Not a WIPP Candidate	
Waste Description	Earthen media less than 60 mm. Example includes dirt with small amounts of small rocks.	
Inner Packaging	See INST-OI-24 [116]	
Drum Preparation	See INST-OI-24 [116]	
Primary Waste Parameter(s)	N/A	
Special Notes	TBD	

N/A	*N/A*	*N/A*
N/A	**BN-627**	**MLLW PCB Soil**
WIPP Status	MLLW – Not a WIPP Candidate	
Waste Description	Earthen media less than 60 mm that is PCB controlled and labeled. Examples include dirt with small amounts of small rocks.	
Inner Packaging	See INST-OI-24 [116]	
Drum Preparation	See INST-OI-24 [116]	
Primary Waste Parameter(s)	N/A	
Special Notes	TBD	

N/A	*N/A*	*N/A*
N/A	**BN-628**	**MLLW PCB Combustible Liquid**
WIPP Status	MLLW – Not a WIPP Candidate	
Waste Description	Free flowing liquid with BTU content.	
Inner Packaging	See INST-OI-24 [116]	
Drum Preparation	See INST-OI-24 [116]	
Primary Waste Parameter(s)	N/A	
Special Notes	Does **not** include decanted liquids from IDC RF-003 containers of Organic Setups) (reference IDC BN-616).	

N/A	*N/A*	*N/A*
N/A	**BN-629**	**MLLW PCB Non-combustible Liquid**
WIPP Status	MLLW – Not a WIPP Candidate	
Waste Description	Free flowing liquid without BTU content.	
Inner Packaging	See INST-OI-24 [116]	
Drum Preparation	See INST-OI-24 [116]	
Primary Waste Parameter(s)	N/A	
Special Notes	TBD	

N/A	*N/A*	*N/A*
N/A	**BN-630**	**MLLW Lead-acid Batteries**
WIPP Status	MLLW – Not a WIPP Candidate	
Waste Description	Lead-acid batteries that have not been drained to remove free liquids (battery acid).	
Inner Packaging	See INST-OI-24 [116]	
Drum Preparation	See INST-OI-24 [116]	
Primary Waste Parameter(s)	N/A	
Special Notes	TBD	

N/A	*N/A*	*N/A*
N/A	**BN-631**	**LLW Non-combustible Liquid**
WIPP Status	LLW – Not a WIPP Candidate	
Waste Description	Free flowing liquid without BTU content. It is generated from process at the AMWTP in radiological areas and cannot be released by Radiological Control.	
Inner Packaging	See INST-OI-24 [116]	
Drum Preparation	See INST-OI-24 [116]	
Primary Waste Parameter(s)	N/A	
Special Notes	TBD	

N/A	*N/A*	*N/A*
N/A	**BN-632**	**MLLW Supercompactor Squeezants**
WIPP Status	MLLW – Not a WIPP Candidate	
Waste Description	Inorganic or organic liquids generated as squeezants from the supercompaction of exclusively MLLW debris waste.	
Inner Packaging	4-liter bottles triple bagged	
Drum Preparation	No liner drum bag	
Primary Waste Parameter(s)	N/A	
Special Notes	MLLW liquids from a MLLW campaign are not intermixed with any liquids generated from the supercompaction of TRU debris waste.	

N/A	*N/A*	*N/A*
N/A	**BN-633**	**MLLW SDOP to Supercompactor**
WIPP Status	MLLW – Not a WIPP Candidate	
Waste Description	All types of debris packaged in 55-gallon drums or larger that have been overpacked into a box or placed on a pallet for processing in AMWTF.	
Inner Packaging	All inner packaging is breached during size reduction or compaction.	
Box Preparation	No liners	
Primary Waste Parameter(s)	N/A	
Special Notes	IDC BN-633 is reserved to track boxes packaged with characterized debris drums for processing in AMWTF and is not to be used for characterizing waste. SDOP is a six-drum overpack wood box, EMOP is an eight-55-gallon drum metal pallet, and an SMOP is a six-85-gallon drum metal pallet. Only those IDCs identified in RPT-TRUW-83 are authorized as feed to the supercompactor and used as SDOP, EMOP, or SMOP inner container feedstock. [6]	

N/A	*N/A*	*N/A*
N/A	**BN-634**	**MLLW PCB Debris Generated from Offsite Waste**
WIPP Status	MLLW – Not a WIPP Candidate	
Waste Description	Solid media >60 mm in any one dimension generated from offsite wastes that is PCB contaminated or PCB items. Examples include PCB items, PPE, tarps, tools, PIG® spill response pig/mat products, HEPA filters, smear paper, etc.	
Packaging	See INST-OI-24 [116]	
Drum Preparation	See INST-OI-24 [116]	
Primary Waste Parameter(s)	N/A	
Special Notes	This IDC applies only to secondary waste generated from waste that is PCB waste and that was received through the AMWTP Offsite Waste Program.	

N/A	*N/A*		*N/A*
N/A	**BN-635**	**MLLW Debris Generated from Offsite Waste**	
WIPP Status	MLLW – Not a WIPP Candidate		
Waste Description	Solid media >60 mm in any one dimension generated from offsite wastes that are **not** profiled by AMWTP for shipment to WIPP (e.g., approved as feed for the supercompacted waste stream). Examples include PPE, tarps, tools, PIG® spill response pig/mat products, drum lids, bag stubs, HEPA filters, etc.		
Packaging	See INST-OI-24 [116]		
Drum Preparation	See INST-OI-24 [116]		
Primary Waste Parameter(s)	N/A		
Special Notes	This IDC applies only to secondary waste generated from waste that is **not** PCB waste, was received through the AMWTP Offsite Waste Program, and is not profiled by AMWTP for shipment to WIPP (e.g., waste approved as feed for the supercompacted waste stream).		

N/A	*N/A*		*N/A*
N/A	**BN-636**	**LLW Empty Containers with PCB**	
WIPP Status	LLW – Not a WIPP Candidate		
Waste Description	Empty cargo containers, 55-gallon drums or 83-/85-gallon overpacks generated during the retrieval or treatment processes with suspect-PCB contamination. [116]		
Inner Packaging	N/A		
Drum Preparation	N/A		
Primary Waste Parameter(s)	Iron-based metals/alloys		
Special Notes	Treatment (e.g., supercompaction) not authorized for this IDC (PCBs). An IDC change to IDC BN-637 is allowed for empty cargos if the analytical results confirm that suspect PCB waste is not PCB waste.		

N/A	*N/A*	*N/A*
N/A	**BN-637**	**LLW Empty Cargos**
WIPP Status	LLW – Not a WIPP Candidate	
Waste Description	Empty cargo containers generated during the retrieval process verified to be non-PCB waste.[116]	
Inner Packaging	N/A	
Drum Preparation	N/A	
Primary Waste Parameter(s)	N/A	
Special Notes	**TBD**	

Heterogeneous Debris Waste	*Unknown/Other Heterogeneous Debris*	*S5000*
S5490	**BN-638**	**Oversized Debris Items From Supercompactor Facility**
WIPP Status	MLLW – Not a WIPP Candidate	
Waste Description	Oversized debris waste items that are transferred out of the facility via the shredder chute. Examples of oversized waste items include hardened metals, milling tables, and large diameter solid bars. The debris items may also include large tools or equipment from the Facility. The waste also includes shredded boxes (wooden and steel) used as filler material. The waste may include gloves, wipes, plastic, PPE, bag cutters, tape, and sleeve stub generated during the packaging operations.	
Inner Packaging	Debris items may be wrapped in plastic.	
Box Preparation	Metal shredder box with docking sleeve	
Primary Waste Parameter(s)	Iron-Based Metals/Alloys, Cellulosics **NOTE**: *Any amount of other debris waste parameters may be present.*	
Special Notes	Shredded boxes are used as "packaging" to fill void volume. This waste does not include items that contain oil filled equipment or waste that does not meet the definition of debris per 40 CFR 268.2 (e.g., lead acid batteries, elemental lead).	

N/A	*N/A*		*N/A*
N/A	**BN-639**	**MLLW Supercompactor Squeezants (P/U listed)**	
WIPP Status	MLLW – Not a WIPP Candidate		
Waste Description	Inorganic or organic liquids generated as squeezants from supercompaction of direct feed MLLW debris waste to the MLLW supercompacted waste stream after the introduction of P/U listed feed stock debris to the Supercompactor.		
Inner Packaging	4-liter bottles/ triple bagged		
Drum Preparation	No liner drum bag		
Primary Waste Parameter(s)	N/A		
Special Notes	MLLW squeezants from MLLW direct feed to the MLLW supercompacted waste stream are not intermixed with squeezants generated from the supercompaction of debris waste to the TRU supercompacted debris waste stream.		

N/A	*N/A*		*N/A*
N/A	**BN-640**	**Solidified Organic Liquids**	
WIPP Status	LLW – Not a WIPP Candidate		
Waste Description	Radiologically contaminated organics such as hydraulic fluids, motor oils, and other organic lubricants generated by routine maintenance and operational activities and solidified using Petroset II, Petroset, and an activator.		
Inner Packaging	None		
Drum Preparation	55-gallon open head drum with pressure equalization vent		
Primary Waste Parameter(s)	Organic Matrix		
Special Notes	Process Control Plans (PCPs) are developed based on the organic compound requiring stabilization. The PCPs will dictate the ratios of additives to waste.		

Solidified Inorganics		*Solidified Homogeneous Solids*	*S3000*
S3150	**RF-696**	**Bldg 771 Cemented Incinerator Sludge**	
WIPP Status	WIPP Candidate		
Waste Description	Cemented Incinerator Sludge was generated between 1985 and 1987. The incinerator sludge was immobilized with Portland cement and water into a 1-gallon polyethylene container mold and allowed to cure. The mold was removed and the solidified "puck" was placed in a 55-gallon drum. Waste may also contain <50% by volume plastic debris items (e.g., broken clamshells).		
Inner Packaging	O-ring bag / small poly bag or large poly bag for the bag-out of multiple pucks at once.		
Drum Preparation	Waste Area Drum - Rigid liner/ poly drum bag/ poly drum bag Glovebox Load-Out Drum - Rigid liner/poly drum bag/O-ring load-out drum bag/fiberboard liner and discs		
Box Preparation	Drums of this waste may be direct loaded into SWBs as an alternate packaging configuration for shipment to WIPP.		
Primary Waste Parameter(s)	Inorganic Matrix		
Special Notes	Cemented pucks may have been bagged out in groups of 3 to 8, or bagged out individually. Building 771 Cemented Incinerator Sludge should be designated as RF-696 in WTS. This waste is identified as RF-807b in some documents. Historical ID typically begins with "IDRF0011."		

Soil	*Soil/Debris*		*S4000*
S4200	**RF-697**	**Dirt**	
WIPP Status	WIPP Candidate		
Waste Description	Dirt, sand, and soil generated from cleanup of spills and leaks. This is the dirt, soil, sand, and gravel portion of IDC RF-374. Waste may only contain <50% by volume construction rubble (e.g., concrete, blacktop, metal, rock, combustibles, glass, or plastic). Approximately 700 drums generated before 1979 may contain material from the lip area beside the blacktop pad that covered contaminated soil. [20]		
Inner Packaging	Single- or double-contained in poly or PVC bags OR packaged in Fiberpaks OR placed directly into waste container		
Drum Preparation	Rigid liner (after 1971) / up to two poly drum bags May have cardboard drum liner		
Box Preparation	Poly box bag/cardboard box liner		
Primary Waste Parameter(s)	Soils/gravel		
Special Notes	Based on RTR results, waste may contain prohibited liquids or impenetrable waste. [242] IDC RF-697 was created to allow segregation of containers that were assigned IDC RF-374 by RF but contain >50% by volume soil. In addition, the IDC title for RF-374 was modified to reflect debris. WMC S4200/IDC RF-697 can ONLY be used if >50% by volume soils, gravel, or sand (natural geologic material ≤2.36 inches [60 millimeters]).		

Solidified Organics		*Solidified Homogeneous Solids*	*S3000*
S3150	**RF-700**	**OASIS Waste**	
WIPP Status	WIPP Candidate – Characterized by CCP		
Waste Description	Solidified organic liquid generated in Building 774 Organic and Sludge Immobilization System (OASIS) prototype by mixing solvent and oils from machining operations with Envirostone® and gypsum cement.		
Inner Packaging	Direct loaded into the waste drum from the glovebox		
Drum Preparation	Rigid liner/poly drum bag/O-ring drum load-out bag		
Primary Waste Parameter(s)	Organic Matrix		
Special Notes	Based on RTR results, waste may contain prohibited liquids within the drum bag. [242] Visual examination of this bulk or direct loaded sludge packaged in 55-, 83-, or 85-gallon drums would not provide additional relevant information to the RTR examination. IDC 700 replaced by IDC 801.		

N/A	*N/A*		*N/A*
N/A	**BN-701**	**MLLW Supercompacted Debris**	
WIPP Status	MLLW – Not a WIPP Candidate		
Waste Description	Debris waste from supercompactor operations compacted into pucks that are all <100 nCi/g and are packaged into 100-gallon drums at the AMWTP.		
Inner Packaging	All inner packaging breached during compaction		
Drum Preparation	100-gallon product drums <100 nCi/g containing multiple compacted 55-gallon drums of debris each <100 nCi/g.		
Primary Waste Parameter(s)	N/A		
Special Notes	Mercury has been found in one MLLW drum (BN10164872). Only those IDCs identified in RPT-TRUW-30 are authorized as feed to the supercompactor.[6]		

N/A	*N/A*		*N/A*
N/A	**BN-702**	**MLLW Supercompacted Debris**	
WIPP Status	MLLW – Not a WIPP Candidate		
Waste Description	Waste from supercompactor operations compacted into pucks that are all <100 nCi/g and are packaged into 100-gallon drums at the AMWTP.		
Inner Packaging	All inner packaging breached during compaction		
Drum Preparation	100-gallon product drums <100 nCi/g containing multiple compacted 55-gallon drums each <100 nCi/g.		
Primary Waste Parameter(s)	N/A		
Special Notes	Only those IDCs identified in RPT-TRUW-83, and approved MLLW waste stream feed stock BL-010 and BL-020 are authorized as feed to the supercompactor.[186]		

N/A		*Unknown/Other Solids*	*S9000*
S9000	**SD-703**	**SDA Waste Containing Nitrate Salts**	
WIPP Status	WIPP Candidate – Offsite Waste Characterized by CCP		
Waste Information	Contact the AMWTP offsite waste coordinator for descriptions of the waste, inner packaging, drum preparation, primary waste material parameters, and prohibited items.[226, 227]		
Special Notes			

Solidified Organics		*Unknown/Other Homogeneous Solids*	*S3000*
S3900	**SD-704**	**SDA Homogeneous Solids**	
WIPP Status	WIPP Candidate – Offsite Waste Solid Sampled by AMWTP and Characterized by CCP		
Waste Information	Contact the AMWTP offsite waste coordinator for descriptions of the waste, inner packaging, drum preparation, primary waste material parameters, and prohibited items. [67, 228]		
Special Notes	If waste is <50% by volume homogeneous solids or contains prohibited items, notify the AMWTP offsite waste coordinator.		

Heterogeneous Debris Waste		*Heterogeneous Debris*	*S5000*
S5400	**SD-705**	**SDA Heterogeneous Debris**	
WIPP Status	WIPP Candidate – Offsite Waste Characterized by CCP		
Waste Information	Contact the AMWTP offsite waste coordinator for descriptions of the waste, inner packaging, drum preparation, primary waste material parameters, and prohibited items. [67, 229]		
Special Notes	If waste is <50% by volume debris or contains prohibited items, notify the AMWTP offsite waste coordinator.		

Soils	*Soil/Debris*		*S4000*
S4200	**SD-706**	**SDA Soil**	
WIPP Status	WIPP Candidate – Offsite Waste Solid Sampled by AMWTP and Characterized by CCP		
Waste Information	Contact the AMWTP offsite waste coordinator for descriptions of the waste, inner packaging, drum preparation, primary waste material parameters, and prohibited items. [67, 230]		
Special Notes	If waste is <50% by volume soils or contains prohibited items, notify the AMWTP offsite waste coordinator.		

Heterogeneous Debris Waste		*Heterogeneous Debris*	*S5000*
S5400	**RL-712**	**Hanford Plutonium Finishing Plant Debris**	
WIPP Status	WIPP Candidate		
Waste Description	Heterogeneous debris waste generated at the Hanford Plutonium Finishing Plant (PFP) that may include iron-based metals tools, scrap, and equipment (pipes, pumps, tanks, hot plates, sampled racks, stirrers, burners, slip-lid cans, levels, grease guns); aluminum (foil, mask filters, racks, containers, structural components), leaded items (aprons, seals, tape, gloves), fluorescent light bulbs; glass; ceramics; paper (cardboard cartons), PPE, rags, wood (ladders, brush handles, filter frames), filter media, rubber (masks, gloves, tubing), and plastics (bags, poly jars, bottles, Anti-Corrosive Rad Pads [polypropylene]); sand, slag, and crucible waste; and beryllium and selenium sources. Waste may also contain <50% by volume absorbed organic and inorganic liquids packaged in metal cans. [82, 182, 190, 191]		
Inner Packaging	Plastic bags (up to five inner bags) May be packaged in poly bottles or metal cans (e.g., 4-quart, 5-quart, and 5-gallon paint cans and 4-gallon slip lid cans)		
Drum Preparation	Poly drum liner bag (after 1977) 55-gallon drum overpacked into 85-gallon drum		
Primary Waste Parameter(s)	Iron-based metals/alloys, plastic (waste materials), cellulosics, rubber, other inorganic materials, other metals **NOTE:** *Other debris waste parameters may be present in the waste.*		
Special Notes	This IDC is assigned to waste received from RL in accordance with AMWTP Profile MPFPDD. [182] RTR/VE to verify that waste does not have any supercompactor facility prohibited items (e.g., PCB items, prohibited liquids, >4-liter sealed containers, unpunctured aerosol cans). If waste contains any prohibited items, notify AMWTP offsite waste coordinator. If waste is <50% by volume debris, recommend IDC UN-00A or UN-00C and notify the AMWTP offsite waste coordinator.		

Heterogeneous Debris Waste		*Heterogeneous Debris*	*S5000*
S5400	**RL-714**	**Hanford Radiochemical Processing Lab 325 Bldg Debris**	
WIPP Status	WIPP Candidate		
Waste Description	Heterogeneous debris waste generated in the Radiochemical Processing Laboratory located in Building 325 at Hanford may include inorganic debris (e.g., iron- based metals, glass ceramics, asbestos, and aluminum-based metals) and organic debris (e.g., plastic, cellulosics, and rubber). Example of debris items include diaper paper, wipes, towels, protective clothing, cardboard, metal cans, HEPA filters, stainless-steel tubing, plastic pipe, lead (bricks and sheeting), poly bottles, machinery, alkaline batteries, circuit boards, incandescent light bulbs, labware (beakers, pipettes, vials, tubing), gloves (leaded, cloth, leather, rubber, Hypalon), lab equipment (balances, drying ovens, heating mantles, pumps, vessels), thermometers, tape, concrete, non-asbestos insulation, plumbing fixtures, ladders, step benches, and tools (screw drivers, wrenches, shears). Waste may also contain <50% by volume absorbed and cemented liquids (organic and inorganic) packaged in cans, absorbents used in packaging (kitty litter, Vermiculite, diatomaceous earth), and soil. [83, 183, 192]		
Inner Packaging	Plastic bags (up to five inner bags including one heat sealed bag) May be packaged in metal cans (e.g., 4-quart, 5-quart, and 5-gallon paint cans and 4-gallon slip lid cans) RTR has also identified waste packaged in cardboard cartons		
Drum Preparation	Poly drum liner bag (after 1977) 55-gallon drum overpacked into 85-gallon drum		
Primary Waste Parameter(s)	Iron-based metals/alloys, other inorganic materials, plastic (waste materials), cellulosics, rubber, other metal **NOTE:** *Other waste parameters may be present in the waste.*		
Special Notes	This IDC is assigned to waste received from RL in accordance with AMWTP Profile RLM325D.001. [183] RTR/VE to verify that waste does not have any supercompactor facility prohibited items (e.g., PCB items, prohibited liquids, >4-liter sealed containers, or unpunctured aerosol cans). If waste contains any prohibited items, notify AMWTP offsite waste coordinator. If waste is <50% by volume debris, recommend IDC UN-00A or UN-00C and notify the AMWTP offsite waste coordinator.		

Solidified Inorganics		*Inorganic Particulate Absorbents*	*S3000*
S3113	**RL-715**	**Hanford Homogeneous Solid Waste**	
WIPP Status	WIPP Candidate – Offsite Waste Solid Sampled by AMWTP and Characterized by CCP		
Waste Information	Contact the AMWTP offsite waste coordinator for descriptions of the waste, inner packaging, drum preparation, primary waste material parameters, and prohibited items. [231, 232]		
Special Notes	If waste is <50% by volume homogeneous solids or contains prohibited items, notify the AMWTP offsite waste coordinator.		

Heterogeneous Debris Waste		*Heterogeneous Debris*	*S5000*
S5400	**RL-716**	**Hanford 231-Z Building Debris**	
WIPP Status	WIPP Candidate		
Waste Description	Heterogeneous debris waste generated in Building 231-Z at Hanford may include cloth, wood, plastic, ladders, plexiglas, step benches, polyethylene bottles, gloves, paper, absorbents, rubber, insulation materials, rags, equipment, tools, glass, conduit, lathes, pumps, tanks, piping, fans, light fixtures, instrumentation, conveyor sections, wire, HEPA filters, gloveboxes, tanks, ductwork, concrete, bricks, floor tiles, piping, sheet rock, and lagging. Waste may also contain <50% by volume liquids absorbed on Quick-Zorb or Zorb-all or solidified with Portland cement packaged in cans and absorbents (e.g., kitty litter, Vermiculite, diatomaceous earth) used in packaging. [84, 184, 193]		
Inner Packaging	Plastic bags (up to two inner bags, including one heat sealed bag) May be packaged in metal cans (e.g., 4-quart, 5-quart, and 5-gallon paint cans and 4-gallon slip lid cans)		
Drum Preparation	Poly drum liner bag (after 1976) 55-gallon drum overpacked into 85-gallon drum		
Primary Waste Parameter(s)	Iron-based metals/alloys, plastic (waste materials), cellulosics, other inorganic materials, rubber **NOTE:** *Other waste parameters may be present in the waste.*		
Special Notes	This IDC is assigned to waste received from RL in accordance with AMWTP Profile RLM231ZD.001. [184] RTR/VE to verify that waste does not have any supercompactor facility prohibited items (e.g., PCB items, prohibited liquids, unpunctured aerosol cans). If waste contains any prohibited items, notify AMWTP offsite waste coordinator. If waste is <50% by volume debris, recommend IDC UN-00A or UN-00C and notify the AMWTP offsite waste coordinator.		

Solidified Inorganics		*Solidified Homogeneous Solids*	*S3000*
S3150	**RL-720**	**Hanford KE Basin North Loadout Pit Sludge**	
WIPP Status	WIPP Candidate – Offsite Waste Solid Sampled by AMWTP and Characterized by CCP		
Waste Information	Contact the AMWTP offsite waste coordinator for descriptions of the waste, inner packaging, drum preparation, primary waste material parameters, and prohibited items. [233, 234]		
Special Notes	If waste is <50% by volume homogeneous solids or contains prohibited items, notify the AMWTP offsite waste coordinator.		

Solidified Inorganics		*Wastewater Treatment Sludges*	*S3000*
S3121	**RF-741**	**Pits 11 & 12 First Stage Sludge**	
WIPP Status	WIPP Candidate		
Waste Description	Drums of inorganic sludge with container prefix 741 that were generated at RF prior to October 1972 and were retrieved during the EWR Project and the IDR Project. The sludge was generated from the same process that generated the IDC RF-001 sludge. [80]		
Inner Packaging	Direct loaded into the waste drum		
Drum Preparation	Poly drum bag/O-ring drum load-out bag Rigid liners are not expected in any of the drums packaged prior to 1972.		
Primary Waste Parameter(s)	Inorganic Matrix		
Special Notes	Based on RTR results of drums of other RF bulk or direct loaded sludge waste, this waste may contain prohibited liquids on top of the sludge, within the drum bag, or between the rigid liner and drum. Visual examination of this bulk or direct loaded sludge packaged in 55-, 83-, or 85-gallon drums would not provide additional relevant information to the RTR examination. Historical ID includes container prefix of "741." Containers retrieved during the EWR Project and the IDR Project were overpacked into 83-gallon drums, cargo containers, or bins which were transferred to TSA-RE (reference IDCs RF-998 and RF-999). [80, 119, 120]		

Solidified Inorganics		*Wastewater Treatment Sludges*	*S3000*
S3121	**RF-742**	**Pits 11 & 12 Second Stage Sludge**	
WIPP Status	WIPP Candidate		
Waste Description	Drums of inorganic sludge generated at Rocky Flats prior to October 1972 with container prefix 742 that were retrieved during the EWR Project and the IDR Project. The sludge was generated from the same process that generated the IDC RF-002 sludge. [80]		
Inner Packaging	Direct loaded into the waste drum		
Drum Preparation	Poly drum bag/O-ring drum load-out bag Rigid liners are not expected in any of the drums packaged prior to 1972.		
Primary Waste Parameter(s)	Inorganic Matrix		
Special Notes	Based on RTR results, waste may contain prohibited liquids. [242] Visual examination of this bulk or direct loaded sludge packaged in 55-, 83-, or 85-gallon drums would not provide additional relevant information to the RTR examination. Historical ID includes container prefix of "742." Containers retrieved during the EWR Project and the IDR Project were overpacked into 83-gallon drums, cargo containers, or bins which were transferred to TSA-RE (reference IDCs RF-998 and RF-999). [80, 119, 120]		

Solidified Organics		*Absorbed Organic Liquids*	*S3000*
S3114	**RF-743**	**Pits 11 & 12 Organic Setups**	
WIPP Status	WIPP Candidate – Characterized by CCP		
Waste Description	Drums of organic waste with container prefix 743 that were generated at RF prior to October 1972 and were retrieved during the EWR Project and the IDR Project. The organic waste was generated from the same process that generated the IDC RF-003 waste. [80]		
Inner Packaging	Direct loaded into the waste drum		
Drum Preparation	Poly drum bag/O-ring drum load-out bag Rigid liners are not expected in any of the drums packaged prior to 1972.		
Primary Waste Parameter(s)	Organic Matrix		
Special Notes	PCB waste with any observable liquid is prohibited from disposal at WIPP. Based on RTR results, waste may contain prohibited liquids. [242] Visual examination of this bulk or direct loaded waste packaged in 55-, 83-, or 85-gallon drums would not provide additional relevant information to the RTR examination. Liquid PCB treatment is only allowed if waste is targeted for shipment to WIPP and when this IDC is approved by EPA for treatment within the AMWTP RBDA. This waste is assumed to be PCB contaminated. The net weight of waste should be used as the "PCB Mass" in WTS. Historical ID includes container prefix of "743." Containers retrieved during the EWR Project and the IDR Project were overpacked into 83-gallon drums, cargo containers, or bins which were transferred to TSA-RE (reference IDCs RF-998 and RF-999). [80, 119, 120]		

Solidified Inorganics		*Solidified Homogeneous Solids*	*S3000*
S3150	**RF-744**	**Pits 11 & 12 Special Setups**	
WIPP Status	WIPP Candidate		
Waste Description	Drums of special setups generated at Rocky Flats prior to October 1972 with container prefix 744 that were retrieved during the EWR Project and the IDR Project. The special setups were generated from the same process that generated the IDC RF-004 special setups waste. [80]		
Inner Packaging	Direct loaded into the waste drum		
Drum Preparation	Poly drum bag/O-ring drum load-out bag Rigid liners are not expected in any of the drums packaged prior to 1972.		
Primary Waste Parameter(s)	Inorganic Matrix		
Special Notes	Based on RTR results of drums of other RF bulk or direct loaded sludge, this waste may contain prohibited liquids on top of the sludge, within the drum bag, or between the rigid liner and drum. Visual examination of this bulk or direct loaded sludge packaged in 55-, 83-, or 85-gallon drums would not provide additional relevant information to the RTR examination. Historical ID includes container prefix of "744." Containers retrieved during the EWR Project and the IDR Project were overpacked into 83-gallon drums, cargo containers, or bins which were transferred to TSA-RE (reference IDCs RF-998 and RF-999). [80, 119, 120]		

Salt Waste		*Evaporator Salts*	*S3000*
S3143	**RF-745**	**Pits 11 & 12 Evaporator Salts**	
WIPP Status	MLLW – Not a WIPP Candidate		
Waste Description	Drums of evaporator salts generated at RFP prior to October 1972 with Container Prefix 745 that were retrieved during the EWR Project and the IDR Project. The evaporator salts were generated from the same process that generated the IDC RF-005 evaporator salts. [80]		
Inner Packaging	Direct loaded into the waste drum		
Drum Preparation	Poly drum bag/O-ring drum load-out bag Rigid liners are not expected in any of the drums packaged prior to 1972.		
Primary Waste Parameter(s)	Other inorganic materials		
Special Notes	Historical ID includes container prefix of "745." Based on RTR results of drums of other RF bulk or direct loaded salt, this waste may contain prohibited liquids. Visual examination of this bulk or direct loaded salt packaged in 55-, 83-, or 85-gallon drums would not provide additional relevant information to the RTR examination. Containers retrieved during the EWR Project and the IDR Project were placed on TSA-RE or overpacked into 83-gallon drums, cargo containers, or bins which were transferred to TSA-RE (reference IDCs RF-998 and RF-999). [80, 119, 120] This IDC also includes drums of evaporator salt packaged prior to 1972 that were placed into MIII bins which were transferred to TSA-RE (reference IDC IW-005). [97]		

Solidified Organics		*Absorbed Organic Liquids*	*S3000*
S3114	**RF-746**	**Pits 11 & 12 903 Pad Oil Drums**	
WIPP Status	WIPP Candidate		
Waste Description	Drums with container prefix 746 may include empty drums that previously contained oil and solvents stored on the 903 Pad at RFP. The drums were emptied and absorbent and Micro-Cel® E (i.e., a synthetic calcium silicate) added at RFP prior to shipping the drums to INL. Some of these drums were placed in the SDA prior to October 1972 and subsequently retrieved during the EWR Project and the IDR Project. IDC RF-746 was created to designate those drums that were not adequately emptied and contain solvent/oil/absorbent/Micro-Cel® E. Drums with container prefix 746 may also contain debris or soil (See Special Notes). [67, 80]		
Inner Packaging	Direct loaded into the waste drum		
Drum Preparation	Poly drum bag/O-ring drum load-out bag Rigid liners are not expected in any of the drums packaged prior to 1972.		
Primary Waste Parameter(s)	Organic Matrix (e.g., sludge)		
Special Notes	PCB waste with any observable liquid is prohibited from disposal at WIPP. The oil/sludge waste is assumed to be PCB contaminated. The net weight of sludge should be used as the "PCB Mass" in WTS. Treatment of liquids is not authorized for this IDC under the approved AMWTP RBDA. Concurrence by EPA must be obtained prior to absorption. Drums were conservatively assigned IDC RF-746 based on their historical drum prefix 746 but may contain debris. If >50% by volume debris, recommend change to IDC RF-750. If >50% by volume soil, recommend change to IDC RF-753. If indeterminate, recommend IDC UN-000 and an AK evaluation will be performed. Historical ID includes container prefix of "746." Containers retrieved during the EWR Project and the IDR Project were overpacked into 83-gallon drums, cargo containers, or bins which were transferred to TSA-RE (reference IDCs RF-998 and RF-999). [80, 119, 120]		

Solidified Inorganics		*Unknown/ Other Homogeneous Solids*	*S3000*
S3900	**RF-747**	**RFP Miscellaneous Sludge**	
WIPP Status	WIPP Candidate		
Waste Description	Drums of sludge generated at RFP with container prefixes other than 741 through 746 (e.g., prefixes 71, 771, 776, 777, or 871). The sludge was generated in buildings other than Building 774 (e.g., Buildings 444, 447, 771, 776, 777, 881 and 883). [53, 80]		
Inner Packaging	Direct loaded into the waste drum		
Drum Preparation	Poly drum bag/O-ring drum load-out bag Rigid liners are not expected in any of the drums packaged prior to 1972.		
Primary Waste Parameter(s)	Inorganic Matrix		
Special Notes	Based on RTR results of drums of RFP bulk or direct loaded sludge, this waste may contain prohibited liquids on top of the sludge, within the drum bag, or between the rigid liner and drum. Based on RTR results, this waste may contain impenetrable waste. [242] If >50% by volume debris, recommend IDC change to UN-00B. If >50% by volume soil, recommend change to IDC UN-00C. If indeterminate, recommend IDC UN-000 and an AK evaluation will be performed. Containers retrieved during the EWR Project and the IDR Project were overpacked into 83-gallon drums, cargo containers, or bins which were transferred to TSA-RE (reference IDCs RF-998 and RF-999). [80, 119, 120]		

Solidified Organics		*Biological Sludges*	*S3000*
S3221	**RF-749**	**Pits 11 and 12 Sewer Sludge**	
WIPP Status	WIPP Candidate		
Waste Description	Drums of sewer sludge generated at RFP sewage treatment plant prior to October 1972 with container prefix 995 that were retrieved during the EWR Project and the IDR Project. The sewage sludge was generated from the same process that generated the IDCs RF-095 and RF-995 sludge. [80]		
Inner Packaging	Direct loaded into the waste drum (prior to 1975).		
Drum Preparation	Poly drum bag/poly drum bag Rigid liners are not expected in any of the drums packaged prior to 1972. Portland cement added as absorbent to bottom of inner bag prior to filling and as a "cap" after filling.		
Primary Waste Parameter(s)	Organic Matrix		
Special Notes	Based on RTR results of drums of other RFP bulk or direct loaded sludge, this waste may contain prohibited liquids on top of the sludge, within the drum bag, or between the rigid liner and drum. Visual examination of this bulk or direct loaded sludge packaged in 55-, 83-, or 85-gallon drums would not provide additional relevant information to the RTR examination. May have cement in drum, rigid liner, and/or poly drum bag. If >50% by volume debris, recommend IDC change to RF-750. If >50% by volume soil, recommend change to IDC RF-753. If indeterminate, recommend IDC UN-000 and an AK evaluation will be performed. Historical ID typically begins with "IDRF0995."		

Heterogeneous Debris Waste		*Unknown/Other Heterogeneous Debris*	*S5000*
S5490	**RF-750**	**Pits 11 & 12 Debris**	
WIPP Status	WIPP Candidate		
Waste Description	Containers of debris generated at RFP prior to October 1972 and retrieved during the EWR Project and the IDR Project. Waste may include combustibles (paper, rags, clothing, wood, and plastic), filter paper, CWS filters, HEPA filters, non-combustibles (glass, scrap metal, ceramics, graphite, firebrick, equipment, and concrete). Waste may also contain <50% by volume soil or homogenous solids. [57, 80]		
Inner Packaging	Direct loaded into the waste drum		
Drum Preparation	Poly drum bag/poly drum bag Rigid liners are not expected in any of the drums packaged prior to 1972. Some debris waste may be packaged in 30-gallon drums. [132]		
Primary Waste Parameter(s)	Cellulosics, plastics (waste materials), rubber, iron-based metals/alloys, aluminum-based metals/alloys, other inorganic materials, other metals		
Special Notes	Based on RTR results, waste may contain capacitors (which may contain PCBs), aerosol cans, prohibited liquids, sealed containers >4 liters (including 30-gallon drums), sharp objects, impenetrable objects/waste, or impenetrable lead shielding. [242] WMC S5490/IDC RF-750 can ONLY be used if >50% by volume RFP debris materials. If the debris waste is packaged in a 30-gallon drum **and** if the debris waste is very dense **or** there is any visible evidence of dense homogeneous solids (e.g. sludge with metal chips and shavings) mixed with the debris, recommend change to IDC UN-00B. If >50% by volume homogeneous solids (e.g., sludge), recommend change to IDC UN-00A. If >50% by volume soil, recommend change to IDC UN-00C. If indeterminate, recommend change to IDC UN-000 and an AK evaluation will be performed. Historical IDs with container prefixes of "71, 76, or 77" may have been generated during D&D of Buildings 776 and 777 after the 1969 fire. [131] Containers retrieved during the EWR Project and the IDR Project were overpacked into 83-gallon drums, cargo containers, or bins which were transferred to TSA-RE (reference IDCs RF-998 and RF-999). [80, 119, 120]		

Solidified Inorganics		*Unknown/Other Homogeneous Solids*	*S3000*
S3900	**RF-751**	**Pits 11 & 12 Roaster Oxide**	
WIPP Status	WIPP Candidate (if TRU waste)		
Waste Description	Containers of roaster oxide (RO) generated at RFP. Containers may be direct shipped from RFP or part of the waste from the EWR or IDR projects. The RO consist of depleted uranium (DU) metal or alloy pieces (machining chips, turnings, or fines) that were oxidized (thermally stabilized) by calcining or roasting resulting in a fine uranium oxide powder (black or black-gray in color) that is approximately three to four millimeters in diameter and varies in texture from relatively fine grained to a more coarse-grained. The waste may also contain debris items including hunks of uranium metal, tooling, work gloves, and other items contaminated with DU. [53, 67,80, 87]		
Inner Packaging	Direct loaded into 30-gallon drum but may only be partially filled [67] 30-gallon drum may be overpacked into 55-gallon drum. [67] Based on RTR, 30-gallon drums or 55-gallon overpacks may be overpacked into bins. Vermiculite or other such substance may be present as filler material between the 30- and 55-gallon drums. [67]		
Drum Preparation	Poly drum bag/O-ring drum load-out bag Rigid liners are not expected in any of the drums packaged prior to 1972. Not expected to be packaged directly into a 55-gallon drum.		
Bin Preparation	Drums of this waste may be direct loaded into MIII or MIV bins.		
Primary Waste Parameter(s)	Other inorganic materials		
Special Notes	Based on RTR results, waste may contain sealed containers >4 liters (including 30-gallon drums) or impenetrable objects/waste. [242] Visual Examination of bulk or direct loaded RO (machining chips, turnings, etc. which have been thermally stabilized) packaged in 30-gallon drums would not provide additional relevant information to the RTR examination. Because waste is predominantly depleted uranium, most of the waste containers will not be shippable to WIPP. The efficiency of oxidation process did not preclude the possibility that pyrophoric material (i.e., un-oxidized machining chips, turning, or fines) may still be present in this waste. [67, 80] Due to the residual heat in the roaster oxide waste when it was placed into the 30-gallon drum, the pieces of oxide may have become fused forming a large chunk of material in the drum. [67] If the container does not contain RO (homogeneous solids) packaged in 30-gallon drums, RTR/VE must recommend an IDC change to the appropriate UN-00x IDC (where x is A, B, C, D, or 0) and an AK evaluation will be performed. AK may assign RF-751 to containers that are greater than 50% debris but may contain roaster oxide or other potentially pyrophoric material (based on characterization results). Repackaged roaster oxide will retain RF-751 for management purposes. Containers retrieved from the EWR and IDR projects were overpacked into 83-gallon drums, cargo containers, or bins which were transferred to TSA-RE (reference IDCs RF-998 and RF-999). [80, 119, 120]		

Heterogeneous Debris Waste		*Unknown/Other Heterogeneous Debris Waste*	*S5000*
S5490	**RF-752**	**Pits 11 & 12 Debris Waste from Non-RF Facilities**	
WIPP Status	Not a WIPP Candidate – Expired IDC (see Special Notes)		
Waste Information	See IDC SD-177		
Special Notes	RF-752 is included in SD-177 and, if the waste is >50% debris, an IDC change to SD-177 is recommended. If the waste is >50% by volume homogeneous solids, recommend SD-176. If the waste is >50% by volume soils, recommend SD-178.		

Soils	*Soil/Debris*		*S4000*
S4200	**RF-753**	**Pits 11 & 12 Legacy Dirt**	
WIPP Status	WIPP Candidate		
Waste Description	Dry dirt or soil generated during operations at RF prior to October 1972 and retrieved during the EWR Project and the IDR Project. Waste may have been generated from cleanup of spills or leaks at RF. Waste may also contain <50% by volume combustible debris items (e.g., coveralls, gloves). Waste does not include any loose dirt that was packaged during retrieval.		
Inner Packaging	Soil may be single or double bagged in small poly bags or directly loaded into the drum		
Drum Preparation	Poly drum bag/poly drum bag/fiberboard liner Up to 2 quarts Oil-Dri® added on top of outer sealed poly drum bag.		
Primary Waste Parameter(s)	Soils/gravel		
Special Notes	Based on RTR results waste may contain sealed containers >4 liters (including 30-gallon drums).[242] Waste does not include loose soil retrieved from the cargo containers. WMC S4200/IDC RF-753 can ONLY be used if >50% by volume soil or gravel (natural geologic material ≤2.36 inches [60 millimeters]). If >50% by volume homogeneous solids (e.g., sludge), recommend change to IDC SD-176 or UN-00A if indeterminate. If >50% by volume debris, including rocks (natural geologic materials >2.36 inches [60 millimeters]), recommend change to IDC RF-750. If indeterminate, recommend IDC UN-000 and an AK evaluation will be performed.		

Heterogeneous Debris Waste		*Unknown/Other Heterogeneous Debris*	*S5000*
S5490	**RF-760**	**RFP Debris**	
WIPP Status	WIPP Candidate		
Waste Description	Waste includes all RFP debris waste that was retrieved with insufficient information to assign a specific RF IDC. This does not include RFP debris waste that is IDR/EWR waste (see RF-750). The waste also includes, but is not limited to loose, repackaged, and/or overpacked RFP debris waste. Waste may include combustibles (e.g., paper, rags, clothing, wood, and plastic), filter paper, CWS filters, HEPA filters, and non-combustibles (e.g., glass, scrap metal, ceramics, graphite, firebrick, equipment, and concrete). Containers of debris waste may also include <50% by volume loose or containerized RFP soil or non-PCB homogenous solids.		
Inner Packaging	Direct loaded into the waste drum		
Drum Preparation	Rigid liner (after 1971)/poly drum bag/poly drum bag Rigid liners are not expected in any of the drums packaged prior to 1972.		
Box Preparation	Poly box bag/cardboard box liner		
Primary Waste Parameter(s)	Cellulosics, plastics (waste materials), rubber, iron-based metals/alloys, aluminum-based metals/alloys, other inorganic materials, other metals.		
Special Notes	Based on RTR results, waste may contain prohibited items, e.g., compressed gases, sharp objects, prohibited liquids, or impenetrable lead shielding. [242] WMC S5490/IDC RF-760 can ONLY be used if >50% by volume RF debris materials. For purposes of characterization of the bins and boxes, RTR can recommend this IDC if the majority of the inner drums are heterogeneous RFP debris. Containers in the bins or boxes may include any RF IDC. If >50% by volume homogeneous solids (e.g., sludge), recommend change to IDC UN-00A. If >50% by volume soil, recommend change to IDC UN-00C. If indeterminate, recommend change to IDC UN-000 and an AK evaluation will be performed. Reference IDC BN-523 for PCB waste that includes RF debris waste commingled with non-RF debris from Pad 1, Cells 1 and 2; oily soil; homogeneous solids from other containers; oily liquids; or other PCB waste. Reference IDC BN-524 for RFP debris waste that is commingled with non-RF debris waste from Pad 1, Cells 1 and 2. Reference RF-750 for RF **waste** retrieved for the cargos or that is RF IDR/EWR waste.		

Heterogeneous Debris Waste		*Unknown/Other Heterogeneous Debris*	*S5000*
S5490	**BN-770**	**Debris from RPT-TRUW-83 Generators**	
WIPP Status	Potential WIPP Candidate		
Waste Description	Waste includes all containerized debris retrieved and verified as containing only waste from known WIPP-approved generator IDCs listed in RPT-TRUW-83 but with insufficient information to assign a specific generator IDC. Waste may include combustibles (e.g., paper, rags, clothing, wood, and plastic), filter paper, CWS filters, HEPA filters, and non-combustibles (e.g., glass, scrap metal, ceramics, graphite, firebrick, equipment, and concrete). Containers of debris waste may also include <50% by volume loose or containerized soil or non-PCB homogenous solids.		
Inner Packaging	May be consistent with any debris IDC.		
Drum Preparation	May be consistent with any debris IDC Rigid liners are not expected in any of the drums packaged prior to 1972.		
Box Preparation	May be consistent with any debris IDC.		
Primary Waste Parameter(s)	Cellulosics, plastics (waste materials), rubber, iron-based metals/alloys, aluminum-based metals/alloys, other inorganic materials, other metals.		
Special Notes	Waste may contain prohibited items such as compressed gases, sharp objects, excess liquids, containerized liquids, or impenetrable lead shielding. WMC S5490/IDC BN-770 can ONLY be used if >50% by volume debris materials. For purposes of characterization of the bins and boxes, RTR can recommend this IDC if the majority of the inner drums are heterogenous debris. Containers in the bins or boxes may include S3000, S4000, or S5000 IDCs. If >50% by volume homogeneous solids (e.g., sludge), recommend change to IDC UN-00A. If >50% by volume soil, recommend change to IDC UN-00C. If indeterminate, recommend change to IDC UN-000 and an AK evaluation will be performed.		

Solidified Inorganics		*Solidified Homogeneous Solids*	*S3000*
S3150	**RF-800**	**First Stage Sludge – Cemented**	
WIPP Status	WIPP Candidate		
Waste Description	Same as IDC RF-001 except for the immobilization process. For IDC RF-800, the sludge was co-fed into a drum with diatomite and Portland cement mixture that formed a solid monolith after curing. Waste may also contain <50% by volume cellulosic, plastic, and metal debris items (e.g., lead tape, filters). [68]		
Inner Packaging	Direct loaded into the waste drum		
Drum Preparation	Rigid liner/poly drum bag/O-ring drum load-out bag		
Box Preparation	Drums of this waste may be direct loaded into SWBs as an alternate packaging configuration for shipment to WIPP.		
Primary Waste Parameter(s)	Inorganic Matrix		
Special Notes	Based on RTR results, waste may contain prohibited liquids within the drum bag. Waste may also contain sharp objects. [242] Visual examination of this bulk or direct loaded sludge packaged in 55, 83, or 85-gallon drums would not provide additional relevant information to the RTR examination. May contain absorbent material in rigid liner. Waste is managed as containing beryllium >1% by weight. Historical ID typically begins with "IDRF7412."		

Heterogeneous Debris Waste		*Unknown/Other Heterogeneous Debris*	*S5000*
S5490 [18]	**MD-801**	**Rags, Paper, Wood, etc.**	
WIPP Status	WIPP Candidate		
Waste Description	Cloth, paper and wood products such as wipes, towels, rags, coveralls, booties and other combustible waste including wood, cardboard tubes, rubber gloves, and plastics. Waste may also contain any amount of non-combustible waste (metal, glass, filters, etc.) or small containers of MD-812, resins.		
Inner Packaging	1-gallon plastic-coated cardboard carton / Poly bag / Stacked in PVC or poly "sleeve" bag. Up to 5 cartons per sleeve bag and up to 8 sleeve bags per drum.		
Drum Preparation	Rigid liner poly drum bag Plywood spacer(s) typically placed between rigid liner lid and drum lid		
Primary Waste Parameter(s)	Cellulosics **NOTE:** *Any amount of other debris waste parameters may be present.*		
Special Notes	Based on RTR results, waste may contain prohibited liquids or sharp objects. [242] Some waste was packaged damp. Some waste may be packaged in ½-gallon paint or 1-gallon metal can instead of the 1-gallon carton. [33, 34] One-gallon cardboard carton is not a sealed container. The IDC designated represents the majority of the waste as identified by the generator; however, cartons/cans of other debris waste material are expected to be present. Only recommend IDC change if non-debris waste is identified >50% by volume of the waste or the majority of the waste is combustibles that are not packaged in cartons or cans (IDC MD-847). [19] Historical ID may include "CD" to identify inner packages.		

Solidified Organics		*Solidified Homogeneous Solids*	*S3000*
S3150	**RF-801**	**Solidified Organics**	
WIPP Status	WIPP Candidate – Characterized by CCP		
Waste Description	Solidified organic liquid generated in Building 774 OASIS process by mixing solvent and oils from machining operations with Envirostone® and gypsum cement. Waste may also contain <50% by volume metal debris items. [74]		
Inner Packaging	Direct loaded into the waste drum		
Drum Preparation	Rigid liner/poly drum bag /O-ring drum load-out bag		
Primary Waste Parameter(s)	Organic Matrix		
Special Notes	Based on RTR results, waste may contain prohibited liquids on top of the sludge, within the drum bag, or between the rigid liner and drum. [242] Visual examination of this bulk or direct loaded sludge packaged in 55-, 83-, or 85-gallon drums would not provide additional relevant information to the RTR examination. May contain absorbent material in rigid liner. Historical ID typically begins with "IDRF0743."		

Heterogeneous Debris Waste		*Unknown/Other Heterogeneous Debris*	*S5000*
S5490 [18]	**MD-802**	**Dry Box Gloves and O-rings**	
WIPP Status	WIPP Candidate		
Waste Description	Primarily neoprene glovebox gloves, neoprene O-rings, lead-lined glovebox gloves including just the arm portion of alpha-box gloves and other combustible waste (paper, cloth, plastic, etc.). Waste may also contain any amount of non-combustible waste (metal, glass, filters, lead bricks etc.) or small containers of MD-812, resins.		
Inner Packaging	1-gallon plastic-coated cardboard carton / Poly bag / Stacked in PVC or Poly "sleeve" bag. Up to 5 cartons per sleeve bag and up to 8 sleeve bags per drum.		
Drum Preparation	Rigid liner/poly drum bag Plywood spacer(s) typically placed between rigid liner lid and drum lid		
Primary Waste Parameter(s)	Rubber (100% for gloves) assigned per CBFO (WAP Table B3-1.) **NOTE:** *Any amount of other debris waste parameters may be present.*		
Special Notes	Based on RTR results, waste may contain prohibited liquids, sealed containers >4 liters, or sharp objects. [242] Some waste may be packaged in ½-gallon metal paint can or a 1-gallon metal can instead of the 1-gallon carton. [33, 34] The IDC designated represents the majority of the waste as identified by the generator; however, cartons/cans of other debris waste material are expected to be present. Only recommend IDC change if non-debris waste is identified >50% by volume of the waste or the majority of the waste is combustibles that are not packaged in cartons or cans (IDC MD-847). [19] Historical ID may include "CD" to identify inner packages.		

Solidified Inorganics		*Solidified Homogeneous Solids*	*S3000*
S3150	**RF-802**	**Solidified Laboratory Waste**	
WIPP Status	WIPP Candidate		
Waste Description	Waste is solidified inorganic waste generated in Building 774 after 1986 by mixing aqueous chemical liquid waste generated by various operations at RF with a cement mixture.		
Inner Packaging	Direct loaded into the waste drum		
Drum Preparation	Rigid liner/poly drum bag/O-ring drum load-out bag		
Box Preparation	Drums of this waste may be direct loaded into SWBs as an alternate packaging configuration for shipment to WIPP.		
Primary Waste Parameter(s)	Inorganic Matrix		
Special Notes	Based on RTR results of drums of other RF bulk or direct loaded sludge, this waste may contain prohibited liquids on top of the sludge, within the drum bag, or between the rigid liner and drum. Visual examination of this bulk or direct loaded sludge packaged in 55, 83, or 85-gallon drums would not provide additional relevant information to the RTR examination. Some drums may contain poly bottles of solidified waste. Recommend IDC UN-00A and an AK evaluation will be performed. Other drums may not contain sludge but contain debris waste (i.e., polyethylene bottles that previously contained liquid waste). A small amount of cement was added to empty bottles before packaging into drums. Recommend change to IDC RF-337 if drum contains only bottles with small amounts of cement. May contain absorbent material in rigid liner. Replaced IDC RF-004 in 1986. Historical ID typically begins with "IDRF0744."		

Heterogeneous Debris Waste		*Unknown/Other Heterogeneous Debris*	*S5000*
S5490 [18]	**MD-803**	**Metal Equipment, Pipe, Valves, etc.**	
WIPP Status	WIPP Candidate		
Waste Description	Stainless steel, carbon steel, and small amounts of aluminum. Waste is in the form of valves, piping, tools, and equipment. Waste also contains other noncombustible waste (HEPA filters, spun-glass liquid filters, fiberglass prefilters, glass, graphite, rust, floor sweepings, sludge, etc.). Waste may also contain any amount of combustible waste (paper, plastic, rubber, etc.). Waste may also contain small containers of mercury (see Special Notes for MD-832, Contaminated Elemental Mercury).		
Inner Packaging	1-gallon plastic-coated cardboard carton/ poly bag/stacked in PVC or poly "sleeve" bag Up to 5 cartons per sleeve bag and up to 8 sleeve bags per drum. A limited number of drums may contain larger waste items (in single or double plastic bags) that do not fit into cartons.		
Drum Preparation	Rigid liner/poly drum bag Plywood spacer(s) typically placed between rigid liner lid and drum lid		
Primary Waste Parameter(s)	Iron-based metals/alloys, other metals, aluminum-based metals/alloys **NOTE:** *Any amount of other debris waste parameters may be present.*		
Special Notes	Based on RTR results, waste may contain compressed gases (including aerosol cans), mercury, prohibited liquids, sealed containers >4 liters, or sharp objects. [242] Verify protection from sharp objects. This waste will likely contain lead. Some waste may be packaged in ½-gallon metal paint can or a 1-gallon metal can instead of the 1-gallon carton. [33, 34] The IDC designated represents the majority of the waste as identified by the generator; however, cartons/ cans of other debris waste material are expected to be present. Only recommend IDC change if non-debris waste is identified >50% by volume of the waste or the majority of the waste is combustibles that are not packaged in cartons or cans (IDC MD-847). [19] Historical ID may include "CD" to identify inner packages.		

Solidified Inorganics		*Solidified Homogeneous Solids*	*S3000*
S3150	**RF-803**	**Solidified DCP Sludge**	
WIPP Status	WIPP Candidate		
Waste Description	Wet sludge from Building 374 was dried and mixed with cement and water to form a monolith. Vermiculite may also be present in the waste. [22]		
Inner Packaging	Direct loaded into the waste drum		
Drum Preparation	Rigid liner/ poly drum bag/O-ring drum load-out bag		
Box Preparation	Drums of this waste may be direct loaded into SWBs as an alternate packaging configuration for shipment to WIPP.		
Primary Waste Parameter(s)	Inorganic Matrix		
Special Notes	Based on RTR results of drums of other RF bulk or direct loaded sludge, this waste may contain prohibited liquids on top of the sludge, within the drum bag, or between the rigid liner and drum. Visual examination of this bulk or direct loaded sludge packaged in 55-, 83-, or 85-gallon drums would not provide additional relevant information to the RTR examination. May contain absorbent material in rigid liner. Historical ID typically begins with "IDRF0747."		

Heterogeneous Debris Waste		*Unknown/Other Heterogeneous Debris*	*S5000*
S5490 [18]	**MD-804**	**Plastic, Tygon, Mani-Boots, etc.**	
WIPP Status	**WIPP Candidate**		
Waste Description	Various types of plastic wastes (PVC, polyethylene, polypropylene, Tygon, etc) in the form of tubing, piping, sample vials, gaskets, manipulator boots, etc. Waste also includes any amount of other combustible wastes (paper, cloth, rubber gloves, etc.) and may also contain any amount of non-combustible wastes (metal, glass filters, etc.) or small containers of MD-812, Resins.		
Inner Packaging	1-gallon plastic-coated cardboard cartons/poly bag/stacked in PVC or poly "sleeve" bag. Up to 5 cartons per sleeve bag and up to 8 sleeve bags per drum.		
Drum Preparation	Rigid liner/poly drum bag/poly or O-ring bag Plywood spacer(s) typically placed between rigid liner lid and drum lid		
Primary Waste Parameter(s)	Plastic (waste materials), rubber **NOTE:** *Any amount of other debris waste parameters may be present.*		
Special Notes	Based on RTR results, waste may contain mercury, sealed containers >4 liters, or sharp objects. [242] Some waste may be packaged in ½-gallon metal paint can or 1-gallon metal cans instead of the 1-gallon cartons. [33, 34] The IDC designated represents the majority of the waste as identified by the generator; however, cartons/cans of other debris waste material are expected to be present. Only recommend IDC change if non-debris waste is identified >50% by volume of the waste or the majority of the waste is combustibles that are not packaged in cartons or cans (IDC MD-847). [19] Historical ID may include "CD" to identify inner packages.		

Heterogeneous Debris Waste		*Unknown/Other Heterogeneous Debris*	*S5000*
S5490 [18]	**MD-805**	**Asbestos Filters**	
WIPP Status	WIPP Candidate		
Waste Description	HEPA filters, primarily 6 inch diameter × 3 inch and 6 inch diameter × 6 inch. Filter media is asbestos and the frame is usually pressed wood. Some filters may have metal frame. Waste also contains filter media without frames and filter media that have been leached with nitric acid. Waste may also contain any amount of other non-combustible wastes (metal, glass, graphite, rust, floor sweepings, sludge, etc.) and may also contain any amount of combustible wastes (plastic, paper, rubber, etc.).Waste may also contain small containers of mercury (see Special Notes for MD-832, Contaminated Elemental Mercury).		
Inner Packaging	1-gallon plastic-coated cardboard box/poly bag/stacked in PVC or poly "sleeve" bag Leached filter media placed in plastic bag prior to packaging in cardboard box. Up to 5 cartons per sleeve bag and up to 8 sleeve bags per drum.		
Drum Preparation	Rigid liner/poly drum bag Plywood spacer(s) typically placed between rigid liner lid and drum lid		
Primary Waste Parameter(s)	Cellulosics, other inorganic materials. **NOTE:** *Any amount of other debris waste parameters may be present.*		
Special Notes	Based on RTR results, waste may contain compressed gases, mercury, sealed containers >4 liters, sharp objects, or impenetrable objects. [242] The waste parameter split for the filters should be Cellulosics (90%) and Other Inorganic Materials (10%). Some waste may be packaged in ½-gallon metal paint can or a 1-gallon metal can instead of the 1-gallon carton. [33, 34] The IDC designated represents the majority of the waste as identified by the generator; however, cartons/cans of other containers of debris waste material are expected to be present. Only recommend IDC change if non-debris waste is identified >50% by volume of the waste or the majority of the waste is combustibles that are not packaged in cartons or cans (IDC MD-847). [19] The cardboard cartons are not layers of containment. Historical ID may include "CD" to identify inner packages.		

Solidified Inorganics		*Solidified Homogeneous Solid*	*S3000*
S3150	**RF-806**	**Solidified Process Solids**	
WIPP Status	WIPP Candidate		
Waste Description	Various sludges, particulates (including ash, resins, etc.), and dissolution heels immobilized into solid monoliths, typically into pucks using a 1-gallon mold. Waste may also contain <50% by volume plastic debris items (e.g., broken clamshells). [66]		
Inner Packaging	Loaded into a waste area drum, or loaded into a Glovebox Load-Out drum		
Drum Preparation	Waste Area Drum - Rigid liner/poly drum bag/poly drum bag Rigid liner/poly drum bag/O-ring drum load-out bag		
Primary Waste Parameter(s)	Inorganic Matrix		
Special Notes	Based on RTR results, waste may contain sharp objects. Based on VE results, waste may also contain sealed containers > 4 liters. [242] Cemented pucks may have been bagged out in groups of 3 to 8, or bagged out individually. Cemented resins should be identified as organic matrix. If cemented resins are >50% by volume, recommend an IDC change to RF-822.		

Solidified Inorganics		*Wastewater Treatment Sludges*	*S3000*
S3121	**RF-807**	**Bldg 374 Bypass Sludge (After 3/21/87)**	
WIPP Status	WIPP Candidate		
Waste Description	Sludge generated in building 374 in support of Pu recovery activities. This sludge bypassed the dryer unit and was direct loaded into the waste drum with cement, generated after 3-21-87. Oil-Dri® or vermiculite may be present in the waste. [22] Waste may also contain <50% by volume rubber and metal debris items (e.g., leaded rubber glove, batteries). [69]		
Inner Packaging	Direct loaded into the waste drum		
Drum Preparation	Rigid liner/poly drum bag/O-ring bag		
Box Preparation	Drums of this waste may be direct loaded into SWBs as an alternate packaging configuration for shipment to WIPP.		
Primary Waste Parameter(s)	Inorganic Matrix		
Special Notes	Based on RTR results, waste may contain prohibited liquids or sharp objects. [242] Visual examination of this bulk or direct loaded sludge packaged in 55, 83, or 85-gallon drums would not provide additional relevant information to the RTR examination. May have 1 – 2 Liters of Oil-Dri® in poly drum bag. Building 374 Bypass Sludge should be designated as RF-807 in WTS and the historical ID typically begins with "IDRF0747." Don't confuse this waste with the cemented incinerator sludge (in the form of small pucks that are assigned RF-696 in WTS). This waste was previously identified as RF-807a.		

Heterogeneous Debris Waste		*Unknown/Other Heterogeneous Debris*	*S5000*
S5490 [18]	**MD-810**	**Glass, Flasks, Sample Vials, Etc.**	
WIPP Status	WIPP Candidate		
Waste Description	Primarily whole and broken glassware and glass vials. Majority of glassware is Pyrex. Waste also includes any amount of other non-combustible wastes (metal, HEPA filters, spun-glass liquid filters, fiberglass prefilters, graphite, rust, floor sweepings, sludge, etc.) and may also contain any amount of combustible wastes (plastic, paper, rubber, etc.). Waste may also contain small containers of mercury (see Special Notes for MD-832, Contaminated Elemental Mercury).		
Inner Packaging	1- or 2-quart metal cans / poly bag / stacked in PVC or poly "sleeve" bag Up to 5 cans per sleeve bag and up to 8 sleeve bags per drum.		
Drum Preparation	Rigid liner / poly drum bag Plywood spacer(s) typically placed between rigid liner lid and drum lid		
Primary Waste Parameter(s)	Other inorganic materials **NOTE:** *Any amount of other debris waste parameters may be present.*		
Special Notes	Based on RTR results, waste may contain prohibited liquids, sealed containers >4 liters, or sharp objects. [242] Some waste may be packaged in ½-gallon metal paint can or a 1-gallon metal can. [33, 34] The IDC designated represents the majority of the waste as identified by the generator; however, cartons/cans of other debris waste material are expected to be present. Only recommend IDC change if non-debris waste is identified >50% by volume of the waste or the majority of the waste is combustibles that are not packaged in cartons or cans (IDC MD-847). [19] Historical ID may include "CD" to identify inner packages.		

Solidified Inorganics		*Reprocessing Solids*	*S3000*
S3125	**MD-811**	**Evaporator and Dissolver Sludge**	
WIPP Status	WIPP Candidate		
Waste Description	Dry evaporator and dissolver sludge in the form of powder or sand-like particles. Waste may also contain <50% by volume debris (metal, glass, filters, graphite, rust, floor sweepings, plastic, combustible, etc.). Waste may also contain small containers of mercury (see Special Notes for MD-832, Contaminated Elemental Mercury).		
Inner Packaging	1/2-gallon metal paint cans or 1-gallon metal cans or 1-gallon plastic-coated cardboard container/poly bag/stacked in PVC or poly "sleeve" bag. Up to 5 containers per sleeve and up to 8 sleeve bags per drum. Variation in packaging may occur.		
Drum Preparation	Rigid liner/poly drum bag Plywood spacer(s) typically placed between rigid liner lid and drum lid		
Primary Waste Parameter(s)	Inorganic Matrix		
Special Notes	Based on RTR results, waste may contain sharp objects. [242] The evaporator and dissolver sludge looks similar to absorbent material due to its particle size. WMC S3125/IDC MD-811 can ONLY be used if >50% by volume homogeneous solids. If >50% by volume debris, recommend change to applicable MD debris IDC. If indeterminate, recommend IDC UN-00A or UN-00B and an AK evaluation will be performed. Approximately one to three 1-gallon cartons of beryllium-contaminated waste generated per year with less than 0.05 grams of beryllium per carton. Historical ID may include "CD" to identify inner packages.		

N/A	*N/A*		*N/A*
N/A	**MD-812**	**Spent Ion Exchange Resin**	
WIPP Status	N/A		
Waste Description	Spent ion exchange resin generated from plutonium recovery operations. Only present in small containers in drums of MD debris waste.		
Inner Packaging	1-gallon plastic-coated cardboard cartons /poly bag/Stacked in PVC or poly "sleeve" bag Up to 5 containers per sleeve.		
Drum Preparation	N/A		
Primary Waste Parameter(s)	Plastic (waste materials)		
Special Notes	Only present as small containers in drums of MD debris waste.		

Heterogeneous Debris Waste		*Unknown/Other Heterogeneous Debris*	*S5000*
S5490 [18]	**MD-813**	**Glass Filters and Fiberglass**	
WIPP Status	WIPP Candidate		
Waste Description	Primarily spun glass filters used to filter solutions (10 inch × 3 inch diameter) and fiberglass prefilters for glove box (6 inch diameter × 0.5 inch thick). Waste includes other non-combustible wastes (metal, HEPA filters, glass, graphite, rust, floor sweepings, sludge, etc.) and may also contain combustible waste (plastic, paper, rubber, etc.).Waste may also contain small containers of mercury (see Special Notes for MD-832, Contaminated Elemental Mercury).		
Inner Packaging	1-gallon plastic-coated cardboard carton/poly bag/stacked in PVC or poly "sleeve" bag Up to 5 containers per sleeve and up to 8 sleeve bags per drum.		
Drum Preparation	Rigid liner / poly drum bag Plywood spacer(s) typically placed between rigid liner lid and drum lid		
Primary Waste Parameter(s)	Other inorganic materials **NOTE:** *Any amount of other debris waste parameters may be present.*		
Special Notes	Based on RTR results, waste may contain sharp objects. [242] Some waste may be packaged in ½-gallon metal paint can or a 1-gallon metal can instead of the 1-gallon carton. [33, 34] This debris waste was packaged using small inner containers (e.g., cardboard cartons). The IDC designated represents the majority of the waste as identified by the generator; however, cartons/cans of other debris waste material are expected to be present. Only recommend IDC change if non-debris waste is identified >50% by volume of the waste or the majority of the waste is combustibles that are not packaged in cartons or cans (IDC MD-847). [19] The cardboard boxes are not layers of containment. Historical ID may include "CD" to identify inner packages.		

Heterogeneous Debris Waste		*Unknown/Other Heterogeneous Debris*	*S5000*
S5490 [18]	**MD-814**	**Graphite Waste**	
WIPP Status	WIPP Candidate		
Waste Description	Graphite crucibles and electrodes from Pu casting operations or analytical procedures. The molds may be broken or whole. Pieces include spacers, electrodes, and graphite pieces from research. Waste may include any amount of other non-combustible wastes (metal, HEPA filters, glass, spun-glass liquid filters, fiberglass prefilters, rust, floor sweepings, sludge, etc.) and may also contain any amount of combustible waste (plastic, paper, rubber, etc.).Waste may also contain small containers of mercury (see Special Notes for MD-832, Contaminated Elemental Mercury).		
Inner Packaging	1-gallon cardboard carton/O-ring bag/poly bag ½-gallon metal can/poly bag/metal can		
Drum Preparation	Rigid liner/poly drum bag/poly drum bag Plywood spacer(s) typically placed between rigid liner lid and drum lid		
Primary Waste Parameter(s)	Other inorganic materials **NOTE:** *Any amount of other debris waste parameters may be present.*		
Special Notes	Based on RTR results, waste may contain compressed gases, mercury, or sharp objects. [242] Some waste may be packaged in ½-gallon metal paint can or a 1-gallon metal can instead of the 1-gallon carton. [33, 34] The IDC designated represents the majority of the waste as identified by the generator; however, cartons/cans of other debris waste material are expected to be present. Only recommend IDC change if non-debris waste is identified >50% by volume of the waste or the majority of the waste is combustibles that are not packaged in cartons or cans (IDC MD-847). [19] Historical ID may include "CD" to identify inner packages.		

Heterogeneous Debris Waste [98]		*Unknown/Other Solids*	*S9000* [98]
S9000 [98]	**MD-815**	**Classified Parts**	
WIPP Status	Waste not currently included in AMWTP scope for WIPP disposal.		
Waste Description	Classified Parts		
Inner Packaging	*Not currently available*		
Drum Preparation	*Not currently available*		
Primary Waste Parameter(s)	*Not currently available*		
Special Notes	S9000 (Unknown/Other Solids) and WMCG Heterogeneous Debris Waste were assigned to IN-W325 in 1995 TWBIR. [98] The final WMC will be determined when sufficient AK or RTR/VE data is available.		

Solidified Inorganics		*Solidified Homogeneous Solids*	*S3000*
S3150	**RF-817**	**Cemented SS and C Heels**	
WIPP Status	WIPP Candidate		
Waste Description	Sand, slag, and crucible heels are the fines that had been processed through the dissolution process to remove Pu. What did not dissolve is called the heels. The heels were mixed with Portland cement and water in 1-gallon molds (clamshell halves) and allowed to cure. The waste was removed from the molds in the form of a solid monolith (puck). Waste may also contain <50% by volume plastic debris items (e.g., broken clamshells).		
Inner Packaging	O-ring bag / small poly bag or large poly bag for the bag-out of multiple pucks at once.		
Drum Preparation	Waste Area Drum - Rigid liner/poly drum bag/poly drum bag Glovebox Load Out Drum - Rigid Liner / Poly Drum Bag / O-ring Load-Out Drum Bag / Fiberboard liner and discs.		
Primary Waste Parameter(s)	Inorganic Matrix		
Special Notes	Cemented pucks may have been bagged out in groups of 3 to 8, or bagged out individually.		

Solidified Inorganics		*Solidified Homogeneous Solids*	*S3000*
S3150	**RF-818**	**Cemented Incinerator Ash**	
WIPP Status	WIPP Candidate		
Waste Description	Ash from the burn chamber (IDC RF-420) of the Pu recovery incinerator. The ash was cemented by hand. Waste may also contain <50% by volume plastic debris items (e.g., broken clamshells).		
Inner Packaging	O-ring bag / small poly bag or large poly bag for the bag out of multiple pucks at once.		
Drum Preparation	Waste Area Drum - Rigid liner/poly drum bag/poly drum bag Glovebox Load-Out Drum - Rigid liner/poly drum bag/ O-ring bag fiberboard liner and disc		
Box Preparation	Drums of this waste may be direct loaded into SWBs as an alternate packaging configuration for shipment to WIPP.		
Primary Waste Parameter(s)	Inorganic Matrix		
Special Notes	Cemented pucks may have been bagged out in groups of 3 to 8, or bagged out individually. There may be some metal or other unburned material in the pucks.		

Solidified Inorganics		*Solidified Homogeneous Solids*	*S3000*
S3150	**RF-820**	**Cemented Soot**	
WIPP Status	WIPP Candidate		
Waste Description	Soot removed during the cleanup of the off-gas system for the Pu recovery incinerator. Was cemented by hand in clamshells and allowed to cure into pucks. Waste may also contain <50% by volume plastic debris items (e.g., broken clamshells).		
Inner Packaging	O-ring bag / small poly bag or large poly bag for the bag out of multiple pucks at once.		
Drum Preparation	Waste Area Drum - Rigid liner/poly drum bag/poly drum bag Glovebox Load-Out Drum - Rigid liner/poly drum bag/O-ring bag fiberboard liner and disc		
Box Preparation	Drums of this waste may be direct loaded into SWBs as an alternate packaging configuration for shipment to WIPP.		
Primary Waste Parameter(s)	Inorganic Matrix		
Special Notes	Based on RTR results, waste may contain sharp objects. [242] Cemented pucks may have been bagged out in groups of 3 to 8, or bagged out individually.		

Solidified Organic		*Organic Homogeneous Solids*	*S3000*
S3211 [10]	**RF-822**	**Cemented Resins**	
WIPP Status	WIPP Candidate		
Waste Description	Washed, spent anion and cation exchange resins cemented with Portland cement and water to form slurry, then cast into a 1-gallon mold. The cured puck was removed from the mold as a solidified monolith. [1] Waste may also contain <50% by volume plastic debris items (e.g., broken clamshells).		
Inner Packaging	O-ring bag/small poly bag		
Drum Preparation	Glovebox Load-Out Drum - Rigid liner/ poly drum bag/O-ring load-out drum bag/One to two poly drum bags (From 1970-72)/ cardboard may have been used to line the inner drum bag		
Primary Waste Parameter(s)	Organic Matrix		
Special Notes	Based on RTR results, waste may contain sharp objects. [242] Lead drum liners between drum and rigid liner used for cemented resin from Am recovery line. One to 2 quarts of Oil-Dri® on top of the poly drum bag (Vermiculite after 2/82 between the rigid liner and the top of the poly drum bag.)		

Solidified Inorganics		*Solidified Homogeneous Solids*	*S3000*
S3150	**RF-823**	**Cemented Miscellaneous Sludge**	
WIPP Status	WIPP Candidate		
Waste Description	Various inorganic particulates and sludges were cemented and allowed to cure into pucks. [66] The cured pucks were removed from the molds in the form of solid monoliths. [75] Waste may also contain <50% by volume plastic debris items (e.g., broken clamshells).		
Inner Packaging	O-ring bag/small poly bag or large poly bag for the bag-out of multiple pucks at once.		
Drum Preparation	Waste Area Drum - Rigid liner/poly drum bag/poly drum bag Glovebox Load-Out Drum - Rigid liner/poly drum bag/O-ring load-out drum bag/fiberboard liner and disc		
Primary Waste Parameter(s)	Inorganic Matrix		
Special Notes	Cemented pucks may have been bagged out in groups of 3 to 8, or bagged out individually. There may be some metal or other unburned material in the pucks.		

Heterogeneous Debris Waste		*Unknown/Other Heterogeneous Debris*	*S5000*
S5490 [18]	**MD-824**	**Equipment Boxes, Non-combustible**	
WIPP Status	WIPP Candidate		
Waste Description	Primarily large non-combustible waste items such as tanks (stainless and tantalum), piping, ducting, conduit, motors, pumps, gloveboxes, miscellaneous equipment, HEPA filters, glass, Plexiglas glovebox windows, and floor tile. Prior to 1981, waste also included large combustible waste items such as plastic tanks, fiberglass gloveboxes, plastic contamination control tents, etc.		
Inner Packaging	Typically single- or double-contained in plastic. Some waste items (pipes or tanks) are closed or ends sealed and placed directly into the waste box. Gloveboxes may be coated with polyurethane foam to fix contamination. Glovebox sections are either placed directly into box or wrapped in one or more layers of plastic.		
Box Preparation	Standard box/plastic box liner / (prior to 1981) cardboard box liner Oversize boxes (used for stainless steel glovebox sections) / no liners. Up to 100 pounds of Florco absorbent placed on bottom of box. Polyurethane foam used for shoring in oversize boxes and some standard-size boxes. Some boxes contain up to 6 smaller plywood boxes of various sizes. Other boxes contain up to 5 drums of combustible and non-combustible waste with foam sprayed in bottom of box to shore the drums.		
Primary Waste Parameter(s)	Iron-based metals/alloys, aluminum-based metals/alloys, other metals (e.g., lead), other inorganic materials, plastic (waste materials) **NOTE:** *When the type of metal cannot be determined, use iron-based metals/alloys waste parameter.* [21]		
Special Notes	Based on RTR results, waste may contain prohibited liquids. [242] Verify protection from sharp objects. Historical ID may include "BX" to identify package type. **NOTE:** *Pipes may be sealed at both ends with room temperature vulcanizing (RTV) rubber); therefore, 4-inch diameter pipe >19 inches long, 3-inch diameter pipe >34 inches long, and 2-inch diameter pipe >77 inches long should be identified as sealed containers >4 liters.*		

Heterogeneous Debris Waste		*Unknown/Other Heterogeneous Debris*	*S5000*
S5490	**MD-825**	**Equipment Drums, Non-combustible**	
WIPP Status	WIPP Candidate		
Waste Description	Non-combustible waste such as small tanks, piping, duct, conduit, motors, pumps, valves, HEPA filters, glass, windows, fiberglass, and floor tile. Waste may include any amount of combustible wastes such as plastic tanks. Waste may also contain small containers of mercury (see Special Notes for MD-832, Contaminated Elemental Mercury). [39]		
Inner Packaging	Poly bag/poly bag O-ring bag/poly bag.		
Drum Preparation	Rigid liner/poly drum bag May contain up to 25 pounds of Florco absorbent in drum bag. Plywood spacer(s) typically placed between rigid liner lid and drum lid		
Primary Waste Parameter(s)	Iron-based metals/alloys, other metals, other inorganic materials **NOTE:** *When the type of metal cannot be determined, use iron-based metals/alloys waste parameter.* [21] *Also any amount of other debris waste parameters may be present.*		
Special Notes	Based on RTR results, waste may contain lead battery (may contain prohibited liquids), compressed gases (including aerosol cans), mercury, prohibited liquids, sealed containers >4 liters, or sharp objects. [242] Some of the drums may contain waste packaged in cartons/cans. Verify protection from sharp objects. Only recommend IDC change if non-debris waste is identified >50% by volume of the waste or the majority of the waste is combustibles that are not packaged in cartons or cans (IDC MD-847). Historical ID may include "EQ" to identify waste type (equipment). **NOTE:** *Pipes may be sealed at both ends with RTV rubber; therefore, 4-inch diameter pipe >19 inches long and 3-inch diameter pipe >34 inches long should be identified as sealed containers >4 liters.*		

Combustibles	*Debris Waste*		*S5000*
S5000	**JH-826**	**Combustible Equip. Boxes and Floor Swp.**	
WIPP Status	Waste not currently included in AMWTP scope for WIPP disposal		
Waste Description	*Not currently available*		
Inner Packaging	*Not currently available*		
Drum Preparation	*Not currently available*		
Primary Waste Parameter(s)	*Not currently available*		
Special Notes	TBD		

N/A	*N/A*		*N/A*
N/A	**MD-826 (before 1981)**	**Floor Sweepings/Rust**	
WIPP Status	N/A		
Waste Description	Before 1981, this IDC was used for glovebox floor sweepings and rust, packaged in cartons.		
Inner Packaging	1-gallon plastic-coated cartons/poly bags stacked in PVC or polyethylene sleeve bags. Up to 5 containers per sleeve.		
Drum Preparation	N/A		
Primary Waste Parameter(s)	Other inorganic materials		
Special Notes	Only present as small containers in drums of other MD debris waste.		

Heterogeneous Debris Waste		*Unknown/Other Heterogeneous Debris*	*S5000*
S5490 [18]	**MD-826** (after 1980)	**Equipment Boxes, Combustible**	
WIPP Status	WIPP Candidate		
Waste Description	After 1980, this IDC was used for large combustible waste items, such as plastic tanks, Plexiglas shielding and windows, wood, and fiberglass glovebox sections. Waste may also contain non-combustible wastes (metal, glass, filters, etc.). Waste may also contain small containers of mercury (see Special Notes for MD-832, Contaminated Elemental Mercury).		
Inner Packaging	Typically contained in one or more plastic bags or wrapped in one or more layers of plastic sheeting. Some waste may be placed directly into waste box.		
Box Preparation	Each box lined with plastic. Up to 100 pounds of Florco absorbent placed in bottom of box.		
Primary Waste Parameter(s)	Cellulosics, plastic (waste materials) **NOTE:** Any amount of *other debris waste parameters may be present.*		
Special Notes	Prior to 1981, large combustible waste items were packaged as MD-824. Historical ID may include "BX" to identify waste package type. **NOTE:** *Prior to 1981, MD-826 was used to identify rust and floor sweepings packaged in 1-gallon plastic-coated cardboard cartons which were packaged in non-combustible waste drums.*		

Heterogeneous Debris Waste		*Debris Waste*	*S5000*
S5000	**JH-827**	**Solid Trash and Dry Lab Material**	
WIPP Status	Waste not currently included in AMWTP scope for WIPP disposal		
Waste Description	*Not currently summarized*		
Inner Packaging	*Not currently summarized*		
Drum Preparation	*Not currently summarized*		
Primary Waste Parameter(s)	*Not currently summarized*		
Special Notes	TBD		

Heterogeneous Debris Waste		*Unknown/Other Heterogeneous Debris*	*S5000*
S5490 [18]	**MD-827**	**Equipment Drums, Combustible**	
WIPP Status	WIPP Candidate		
Waste Description	Rubber, plastic, cellulose, may include any amount of metal equipment. Waste was too large to fit inside cartons.		
Inner Packaging	Typically contained in one or more plastic bags or wrapped in one or more layers of plastic sheeting. Some waste may be placed directly into waste drum. [33, 34]		
Drum Preparation	Rigid liner/poly drum bag Plywood spacer(s) typically placed between rigid liner lid and drum lid		
Primary Waste Parameter(s)	Rubber, cellulosics, plastic (waste materials) **NOTE:** *Any amount of other debris waste parameters may be present.*		
Special Notes	Some of the drums may contain waste packaged in cartons/cans. Only recommend IDC change if non-debris waste is identified >50% by volume of the waste or the majority of the waste is combustibles that are compacted (IDC MD-847). Historical ID may include "EQ" to identify waste type (equipment).		

Combustibles	*Organic Debris*		*S5000*
S5300 [89]	**RF-831**	**Dry Combustibles**	
WIPP Status	WIPP Candidate		
Waste Description	Cloth, paper and wood products primarily such as wipes, towels, rags, coveralls, booties, HEPA filter frames. Waste was packaged as a dry waste. Waste may include any amount of plastic.		
Inner Packaging	O-ring bag/poly bag Poly bag/poly bag		
Box Preparation	Poly box bag/cardboard box liner Up to 100 pounds of absorbent may have been added to box during packaging.		
Primary Waste Parameter(s)	Cellulosics		
Special Notes	Based on VE results, waste may contain sharp objects. [242]		

N/A	*N/A*		*N/A*
N/A	**MD-832**	**Contaminated Elemental Mercury**	
WIPP Status	N/A		
Waste Description	Contaminated elemental mercury included in small containers in drums of MD debris waste.		
Inner Packaging	Pint size plastic bottles inside 1-gallon, plastic coated cardboard cartons or ½-gallon metals cans/poly bag/stacked in PVC or poly "sleeve" bag. Up to 5 containers per sleeve.		
Drum Preparation	N/A		
Primary Waste Parameter(s)	Other Metals		
Special Notes	Only present as small containers in drums of MD debris waste. Small containers with residual mercury cannot be supercompacted. These containers may be segregated from TRU waste and be sent to SCW for treatment.		

Combustibles	*Organic Debris*		*S5000*
S5300 [89]	**RF-832**	**Wet Combustibles**	
WIPP Status	**WIPP Candidate**		
Waste Description	Cloth, paper and wood products primarily such as wipes, towels, rags, coveralls, booties, HEPA filter frames. Waste was packaged as a moist waste. Waste may include any amount of plastic.		
Inner Packaging	O-ring bag / poly bag Poly bag / poly bag		
Box Preparation	Poly box bag/ cardboard box liner Up to 100 pounds of absorbent may have been added to box during packaging.		
Primary Waste Parameter(s)	Cellulosics		
Special Notes	Based on VE results, waste may contain sharp objects. [242]		

Combustibles	*Organic Debris*		*S5000*
S5300 [89]	**RF-833**	**Plastics, TRU Mixed**	
WIPP Status	WIPP Candidate		
Waste Description	Polypropylene, polyethylene, and PVC, in the form of empty plastic bottles, piping and tubing, plastic windows, plastic bags and plastic sheeting, tygon tubing, supplied air suits, Respirator parts and cartridges, non-leaded glovebox gloves. Waste may include any amount of cellulosics.		
Inner Packaging	O-ring bag/poly bag or poly bag/poly bag		
Box Preparation	Poly box bag/ cardboard box liner Up to 100 pounds of absorbent may have been added to box during packaging.		
Primary Waste Parameter(s)	Plastic (waste materials)		
Special Notes	TBD		

Solidified Inorganics		*Inorganic Particulate Absorbents*	*S3000*
S3113	**MD-834**	**High Level Acid**	
WIPP Status	WIPP Candidate		
Waste Description	Acidic liquid wastes from Pu recovery processing. Acidic liquids were absorbed in clay material (Florco absorbent) between July 1975 and December 1976. Prior to July 1975, diatomaceous earth (Auto-Dri and/or Dri-Rite) was used but drums were subsequently repackaged and Florco added at Mound prior to shipping to INL. After 1976, caustic waste was combined with the acidic waste for processing as IDC MD-835. A limited number of drums of acidic and caustic liquid wastes were absorbed with Florco and packaged in small bottles prior to 1982. [3]		
Inner Packaging	Direct loaded into drum by adding 10-gallons of liquid to 150 pounds of absorbent. A small number of drums may contain sludge waste packaged in 1/2- or 1-gallon poly bottles, which were then placed in a poly bag. See Special Notes below.		
Drum Preparation	Rigid liner/poly drum bag Plywood spacer(s) typically placed between rigid liner lid and drum lid		
Box Preparation	Drums of this waste may be direct loaded into SWBs as an alternate packaging configuration for shipment to WIPP.		
Primary Waste Parameter(s)	Inorganic Matrix		
Special Notes	Based on RTR results, waste may contain prohibited liquids within the drum bag or sharp objects. [242] The waste may be packaged in up to 45 bottles of absorbed acidic and/or caustic waste per drum. Vermiculite and Florco were used as absorbents until the early 1970s, and then Auto-Dri and Sorbal were used as absorbents until a drum pressurization problem occurred due to their use. After the pressurization problem was identified, Florco was again used, beginning in July 1975 and ending in 1976. Drums of bulk or direct loaded waste with pack dates after 1976 are assumed to contain the acid liquids that were absorbed on Auto-Dri or Sorbal prior to July 1975 that were subsequently repackaged at Mound by placing half the contents into a new drum and adding Florco. [3] An AK evaluation is recommended for drums without a Poly drum bag and with gross weights over 600 pounds or large difference between drum weight and weight of Historical ID drum. For these conditions recommend an IDC change, if indeterminate, recommend IDC UN-00A and an AK evaluation will be performed. Historical ID may include "AC" to identify waste type (acid/caustic waste).		

Solidified Inorganics		*Inorganic Particulate Absorbents*	*S3000*
S3113	**MD-835**	**High Level Caustic**	
WIPP Status	WIPP Candidate		
Waste Description	Caustic liquid wastes from fume scrubber system. Caustic waste was absorbed in aluminum-magnesium-iron silicate clay (Florco). Since 1976, acidic waste was combined with the caustic waste.		
Inner Packaging	Direct loaded into drum by adding 10-gallons of liquid to 150 pounds of absorbent. A small number of drums may contain sludge waste packaged in 1/2- or 1-gallon poly bottles, which were then placed in a poly bag. See Special Notes below.		
Drum Preparation	Rigid liner/poly drum bag Plywood spacer(s) typically placed between rigid liner lid and drum lid		
Box Preparation	Drums of this waste may be direct loaded into SWBs as an alternate packaging configuration for shipment to WIPP.		
Primary Waste Parameter(s)	Inorganic Matrix		
Special Notes	Based on RTR results, drums of MD bulk or direct loaded solids waste may contain prohibited liquids. Waste may also contain sharp objects. [242] The waste may be packaged in up to 45 bottles of absorbed acidic and/or caustic waste per drum. Vermiculite and Florco were used as absorbents until the early 1970s, then Auto-Dri and Sorbal used as absorbent until a drum pressurization problem occurred due to their use. After the pressurization problem was identified, Florco was again used, beginning in July 1975. An AK evaluation is recommended for drums without a Poly drum bag and with gross weights over 600 pounds or large difference between drum weight and weight of historical ID drum. For these conditions recommend an IDC change, if indeterminate, recommend IDC UN-00A and an AK evaluation will be performed. Historical ID may include "AC" or "CA" to identify waste type (acid/caustic or caustic).		

Solidified Inorganics		*Inorganic Particulate Absorbents*	*S3000*
S3113	**SR-835**	**SRS High Level Caustic**	
WIPP Status	WIPP Candidate – Offsite Waste Solid Sampled by AMWTP and Characterized by CCP		
Waste Information	Contact the AMWTP offsite waste coordinator for descriptions of the waste, inner packaging, drum preparation, primary waste material parameters, and prohibited items. [218, 219]		
Special Notes	If waste is <50% by volume homogeneous solids or contains prohibited items, notify the AMWTP offsite waste coordinator.		

Solidified Inorganics		*Wastewater Treatment Sludges*	*S3000*
S3121	**MD-836**	**High Level Sludge/Cement**	
WIPP Status	WIPP Candidate		
Waste Description	Cemented sludge (sometimes called solidified sludge/liquid) generated from processing all low-level, alpha contaminated liquids wastes (shower water and soap, decontamination water, cooling water, some acids and caustics, etc.) from building floor drains, laundry and labs. Waste generated by mixing approximately 40-gallons of dewatered sludge with 2 to 2-1/2 bags of Portland cement resulting in a solidified waste.		
Inner Packaging	Direct loaded into the prepared waste drum. Unmixed cement was placed on top of the sludge-cement mixture before placing the lid on the rigid liner. [46]		
Drum Preparation	Rigid liner (no poly bag liner) Plywood spacer(s) typically placed between rigid liner lid and drum lid		
Box Preparation	Drums of this waste may be direct loaded into SWBs as an alternate packaging configuration for shipment to WIPP.		
Primary Waste Parameter(s)	Inorganic Matrix		
Special Notes	Based on RTR results, waste may contain prohibited liquids on top of the sludge or between the rigid liner and the drum. Waste may also contain sharp objects. [242] Some drums may include a poly drum bag as part of the packaging configuration. [47] A cement cap and variable layers of solidification have been observed in drums of cemented sludge during coring activities. [48] Generally, the sludge/cement drum weighs between 600 and 650 pounds (gross weight with >85 vol. % fill). Some drums may also contain <50% by volume plastic waste (with small quantities of liquids) on top of the cemented sludge. [45] Lighter drums (generally 300 to 400 pounds) typically contain these plastic, paper and gloves generated from cleanup operations. An AK evaluation is recommended for drums with poly bag liner and weights less than 400 pounds (with fill factor for sludge/cement mixture >70 vol. %), or for drums with large differences between drum weight and weight of historical ID drum. For these conditions recommend an IDC change, if indeterminate, recommend IDC UN-00A and an AK evaluation will be performed. Historical ID may include "SL" to identify waste type (sludge).		

Heterogeneous Debris Waste		*Unknown/Other Heterogeneous Debris*	*S5000*
S5490 [18]	**MD-838**	**<10 nCi/g Non-combustible**	
WIPP Status	WIPP Candidate		
Waste Description	LSA drum of non-combustible waste may also contain some combustible waste <10 nCi/g		
Inner Packaging	Poly bag/poly bag or placed directly in drum		
Drum Preparation	Poly drum bag		
Primary Waste Parameter(s)	*Not currently available*		
Special Notes	MD records indicate the drum contains combustible waste that was accidentally shipped to INL instead of commercial burial ground.		

Soils	*Soils/Debris*	*S4000*
S4200	**MD-842**	**Contaminated Soil**
WIPP Status	WIPP Candidate	
Waste Description	Contaminated soil, including rocks and pebbles generated from the cleanup of spills and leaks. Soil was dry when packaged in the boxes. Waste may also contain <50% by volume debris waste (gloves and shovels) that was generated during the clean up.	
Inner Packaging	Packaged in small plastic-lined plywood boxes.	
Box Preparation	Four small boxes packaged into standard waste box with no plastic or cardboard liner. Pieces of lumber (2 × 4 inch) were used as blocking between smaller boxes.	
Primary Waste Parameter(s)	Soils/gravel	
Special Notes	WMC S4200/IDC-842 can ONLY be used if >50% by volume soil, gravel, or sand (natural geologic material ≤2.36 inches [60 millimeters]). If >50% by volume debris (including rock >2.36 inches), recommend change to the applicable MD debris IDC. If indeterminate, recommend IDC UN-00B or UN-00C and an AK evaluation will be performed. Historical ID may include "CS" to identify waste type (contaminated soil) or "BX" to identify package type.	

Soils	*Soils/Debris*	*S4000*
S4200	**SR-842**	**SRS Mound Site Soil/Debris**
WIPP Status	WIPP Candidate – Offsite Waste Solid Sampled by AMWTP and Characterized by CCP	
Waste Information	Contact the AMWTP offsite waste coordinator for descriptions of the waste, inner packaging, drum preparation, primary waste material parameters, and prohibited items. [218, 240]	
Special Notes	If waste is <50% by volume soil or contains prohibited items, notify the AMWTP offsite waste coordinator.	

Heterogeneous Debris Waste		*Unknown/Other Heterogeneous Debris*	*S5000*
S5490 [18]	**MD-847**	**LSA<100 nCi/g Combustible**	
WIPP Status	WIPP Candidate		
Waste Description	Non-line generated combustible waste such as plastic sheeting, paper, rags, gloves (rubber, cloth) plastic bottles, wood, paper suits and shoe covers. The waste may be either dry or damp. Waste may be compacted 4:1. Waste may also contain any amount of non-combustible waste such as metals, glass, and concrete. [30]		
Inner Packaging	Poly bag sealed with tape		
Drum Preparation	Rigid liner Absorbent clay (up to 25 pounds) was placed in the bottom of the rigid liner. Plywood spacer(s) typically placed between rigid liner lid and drum lid.		
Primary Waste Parameter(s)	Cellulosics, plastic (waste materials), rubber **NOTE:** *Any amount of other debris waste parameters may be present.*		
Special Notes	Based on RTR results, waste may contain light ballasts or transformers (which may contain PCB), compressed gasses (including aerosol cans), prohibited liquids, sealed containers >4 liters, sharp objects or impenetrable objects. [242] A majority of this waste is slightly compacted combustible waste. Waste may be packaged in up to four layers. [27] Historical ID may include "LC" or "LS" to identify waste type (combustible, LSA) or "LD" to identify compacted waste.		

Heterogeneous Debris Waste		*Unknown/Other Heterogeneous Debris*	*S5000*
S5490 [18]	**MD-848**	**LSA<100 nCi/g Non-combustible**	
WIPP Status	WIPP Candidate		
Waste Description	Non-line generated non-combustible wastes such as tools, pipe, equipment, metal, glass, concrete, plaster, bricks, and dirt. Waste may also contain combustible wastes (paper, rags, etc.).		
Inner Packaging	Poly bag/poly bag or placed directly in drum		
Drum Preparation	Rigid liner/poly drum bag Absorbent clay (up to 25 pounds) was placed in the bottom of the bag liner. Plywood spacer(s) typically placed between rigid liner lid and drum lid		
Primary Waste Parameter(s)	Iron-based metals/alloys, other metals, aluminum-based metals/alloys, other inorganic materials, soils/gravel **NOTE:** *Any amount of other debris waste parameters may be present.*		
Special Notes	Based on RTR results, waste may contain compressed gases (including aerosol cans), prohibited liquids, or sealed containers >4 liters, sharp objects, or impenetrable objects. [242] If indeterminate, recommend IDC UN-00B or UN-00C and an AK evaluation will be performed. If contents of the container are predominantly combustibles (plastics, paper, rubber), and not packaged in cartons, recommend change to IDC MD-847. Historical ID may include "LN" or "LS" to identify waste type (non-combustible, LSA). **NOTE:** *Per AK concerning the MD D&D process, pipes may be sealed at both ends with RTV rubber;* therefore *4-inch diameter pipe >19-inches in length should be identified as sealed containers >4 liters.*		

Combustibles	*Unknown/Other Organic Debris*		*S5000*
S5390	**RF-900**	**LSA Paper, Plastic, etc.**	
WIPP Status	WIPP Candidate		
Waste Description	Non-line generated combustible waste including plastics, empty polyethylene bottles, surgeon's gloves, cloth, paper, wipes, rubber, coveralls, and booties. Waste was packaged as a moist waste. Waste may also contain any amount of wood but may only contain <50% by volume glass, metal and other inorganic material debris items (e.g., welding rods, steel pipe, nuts, bolts, electric motor, flashlights, and concrete).		
Inner Packaging	Waste was typically placed directly into drum or box.		
Drum Preparation	Rigid liner (after 1971)/poly drum bag/poly drum bag Up to 15 pounds of cement was added to drums containing damp waste. Some drums may include a cardboard liner.		
Box Preparation	Poly box bag/cardboard box liner		
Primary Waste Parameter(s)	Cellulosics, plastics (waste materials), rubber		
Special Notes	Based on RTR results, waste may contain aerosol cans, prohibited liquid, sealed containers >4 liters, sharp objects, or impenetrable objects/waste.[242] IDC RF-900 was not shipped to INL after 1975; IDCs RF-330 and RF-337 were used by RF for similar waste generated before and after this date. [3, 97, 152]		

Heterogeneous Debris	*Unknown/Other Heterogeneous Debris*		*S5000*
S5490 [65]	**RF-950**	**LSA Metal, Glass, etc.**	
WIPP Status	WIPP Candidate		
Waste Description	Non-line generated, non-combustible waste including electric conduit, metal piping, tools, electronic instrumentation, light bulbs, windows, office equipment, lead shielding, and structural steel. The waste may also contain any amount of combustible wastes (e.g., paper, plastic, rubber).		
Inner Packaging	Poly bag/poly bag or placed directly into the drum or box.		
Drum Preparation	Rigid liner (after 1971)/poly drum bag/poly drum bag		
Box Preparation	Poly box bag/cardboard box liner		
Primary Waste Parameter(s)	Iron-based metals/alloys, other metals, aluminum-based metals/alloys, other inorganic materials **NOTE:** *Any amount of other debris waste parameters may be present.*		
Special Notes	Based on RTR results, this waste may contain a wide variety of manufactured items which may contain PCB electrical items (e.g., ballasts, transformers, or capacitors). Waste may also contain aerosol cans, prohibited liquids, sealed containers > 4 liters, sharp objects, or impenetrable objects/waste. [242] Bottles of soil were found in individual boxes of MLLW.[118] A 5-gallon bucket containing a small volume of waste suspected to be sodium nitrate was reportedly found in an individual box of MLLW. [118] IDC RF-950 was not shipped to INL after 1975; IDCs RF-440 and RF-480 were used by RF for similar waste generated before and after this date. [3, 97, 152] Some drums that were retrieved from Pits 11 and 12 are labeled IDC "950" but are also marked "roaster oxide." Therefore, historical IDC RF-751 is assigned at retrieval to any drum retrieved from the cargo containers that is marked "roaster oxide" and is identified as IDC "950."		

Heterogeneous Debris Waste		*Unknown/Other Heterogeneous Debris*	*S5000*
S5490 [95]	**RF-960**	**Concrete, Asphalt, etc.**	
WIPP Status	**WIPP Candidate**		
Waste Description	Waste consists primarily of concrete and asphalt (blacktop). Boxed waste was probably generated from the removal of six reinforced-concrete treatment tanks at Building 774. [3] Waste may contain any amount of metals, glass, combustibles and other construction rubble (e.g., combustibles, metal, glass, plastic, rubber, ceiling tiles, floor tiles, sheetrock). Waste may only contain <50% by volume non-debris (e.g. soil or sludge).		
Inner Packaging	Waste may be single- or double-bagged, contained in Fiberpaks, or placed directly into drums or boxes.		
Drum Preparation	Rigid liner (after 1971)/poly drum bag/poly drum bag Some drums may not have rigid liner and/or poly bags.		
Box Preparation	Poly box bag/cardboard box liner.		
Primary Waste Parameter(s)	Other inorganic materials (e.g., concrete, rock, stone portion of blacktop, felt portion of tar paper), Organic Matrix (e.g., 5% for organic binder portion of asphalt blacktop; 10% for organic portion of tar paper). **NOTE:** *Any amount of other debris waste parameters may be present.*		
Special Notes	Based on RTR results, waste may contain light ballasts (which may contain PCBs), aerosol cans, prohibited liquid, sealed containers >4 liters, sharp objects, impenetrable objects/waste or impenetrable lead shielding. Small caliber ammunition (explosives) was identified in one drum. [242] WMC S5490/IDC RF-960 can ONLY be used if >50% by volume debris (including rock >2.36 inches [60 millimeters]). If >50% by volume soil, gravel, or sand (natural geologic material $\leq$2.36 inches [60 millimeters]), recommend change to IDC RF-090 or RF-990 (if waste generated in Building 774). If indeterminate, recommend IDC UN-00B or UN-00C and an AK evaluation will be performed. IDC RF-960 was not shipped to INL after 1973; IDC RF-374 was used by RF for similar waste generated before and after this date. [3, 152]		

Combustibles	*Wood Debris*	*S5000*
S5320	**RF-970**	**Wood**
WIPP Status	WIPP Candidate	
Waste Description	Wood products including lumber, plywood, filter frames, and ladders. Waste may also contain <50% by volume plastic, metal, and other inorganic material debris items (e.g., wipes, nails, sheetrock). May also include Benelex. [20]	
Inner Packaging	O-ring bag/poly bag or poly bag/poly bag	
Drum Preparation	Rigid liner (after 1971)/poly drum bag/poly drum bag	
Box Preparation	Poly box bag/cardboard box liner	
Primary Waste Parameter(s)	Cellulosics	
Special Notes	Based on RTR results, waste may contain prohibited liquid or sharp objects. [242] IDC-970 was not shipped to INL after 1978; IDC RF-330 was used by RF for similar waste generated before and after this date. [3, 152]	

Solidified Inorganics	*Unknown/Other Inorganic Sludges*	*S3000*
S3129	**RF-976**	**Building 776 Process Sludge**
WIPP Status	WIPP Candidate	
Waste Description	Sludge mixed with cement from two waste collection tanks in building 776. The tanks collected effluent from the floor drains.	
Inner Packaging	Direct loaded into the waste drum	
Drum Preparation	Rigid liner (after 1971)/poly drum bag/poly drum bag	
Box Preparation	Poly box bag/cardboard box liner Up to 5 drums were packed into waste boxes.	
Primary Waste Parameter(s)	Inorganic Matrix	
Special Notes	Based on RTR results of drums of other RF bulk or direct loaded sludge, this waste may contain prohibited liquids on top of the sludge, within the drum bag, or between the rigid liner and drum. Based on RTR results, waste may contain sharp objects. [242] It is believed that some drums began to pressurize or show signs of pressurization prior to placement in waste boxes. Per TWMIS, IDC RF-976 was only shipped to INL in 1976 and early 1977; however, it may have been generated during the period of 1971 through 1979. [3, 20, 97]	

Solidified Inorganics		*Unknown/Other Inorganic Sludges*	*S3000*
S3129	**RF-978**	**Laundry Sludge**	
WIPP Status	WIPP Candidate		
Waste Description	Sludge mixed with cement from two tanks that collected effluent from the laundry in Building 776		
Inner Packaging	Direct loaded into the waste drum		
Drum Preparation	Rigid liner (after 1971)/poly drum bag/poly drum bag		
Box Preparation	Poly box bag/cardboard box liner Up to 5 drums were packed into waste boxes.		
Primary Waste Parameter(s)	Inorganic Matrix		
Special Notes	Based on RTR results of drums of other RF bulk or direct loaded sludge, this waste may contain prohibited liquids on top of the sludge, within the drum bag, or between the rigid liner and drum. It is believed that some drums began to pressurize or show signs of pressurization prior to placement in waste boxes. Stratification layers may be visible. The possibility exists that some boxes of RF-978 contain drums of RF-976 process sludge. Drum lids might have been loosened or holes might have been drilled in the drum lids prior to placement in the boxes.[3] Per TWMIS, IDC RF-978 only shipped to INL in late 1975 through 1977; however, it may have been generated during the period of 1971 through 1979. [3, 20, 97]		

Solidified Inorganics [98]		*Unknown/Other Solids*	*S9000*
S9000	**RF-980**	**Equipment**	
WIPP Status	WIPP Candidate		
Waste Description	Equipment (see special notes).		
Inner Packaging	*Not currently available*		
Drum Preparation	May contain rigid liner and poly bags.		
Primary Waste Parameter(s)	*Not currently available*		
Special Notes	IDC RF-980 was only prior to 1974. IDRF000755884 (container 10166784) is the only drum of RF-980 identified in TWMIS. It was verified to contain only small containers of sludge. This IDC is being retained in case individual drums of this waste are found in Cells 1 or 2 of Pad 1. S3123 (Off-Gas Treatment Sludges) and WMCG Solidified inorganics were assigned to waste IN-W187 in 1995 TWBIR based on above information that the single drum of RF-980 contains only IDC RF-290 sludge. [98] S9000 was conservatively assigned because information for this drum is unclear. The final WMC will be determined when sufficient AK or RTR/VE data is available. Recommend an IDC change to RF-950 or RF-960 if the majority of the drum contents are debris.		

Soils	*Soils/Debris*		*S4000*
S4200	**RF-990**	**Dirt**	
WIPP Status	WIPP Candidate		
Waste Description	Dry dirt or soil generated during the cleanup of spills or leaks. Waste also includes soil taken from around Building 774. [20] Waste may also include evaporator pond sludge. Waste could be damp. Waste may also contain <50% by volume cellulosic debris items (e.g., coveralls and gloves) generated during the cleanup.		
Inner Packaging	Soil may be double bagged in small poly bags or direct loaded into the drum		
Drum Preparation	Rigid liner (after 1971) / poly drum bag / poly drum bag Drums may contain a fiberboard liner		
Primary Waste Parameter(s)	Soils/gravel.		
Special Notes	Based on RTR results, waste may contain aerosol cans, prohibited liquid, sealed containers > 4 liters, sharp objects, or impenetrable waste. [242] IDC RF-990 replaced IDC RF-090 in early 1972 and was not shipped to INL after 1975. [3, 97, 152] WMC S4200/IDC RF-990 can ONLY be used if >50% by volume soil, gravel, or sand (natural geologic material ≤2.36 inches [60 millimeters]). If >50% by volume debris, recommend change to IDC RF-960 or RF-374. If indeterminate, recommend IDC UN-00B or UN-00C and an AK evaluation will be performed.		

Solidified Organics		*Biological Sludges*	*S3000*
S3221	**RF-995**	**Sewer Sludge**	
WIPP Status	WIPP Candidate		
Waste Description	Sludge primarily from cleaning the stabilization ponds at Building 995 sewage treatment plant. Cement was added in layers as drum filled if the sludge was moist.		
Inner Packaging	Direct loaded into the waste drum (prior to 1975) or waste box (after 1974).		
Drum Preparation	Rigid liner (after 1971)/poly drum bag/poly drum bag Portland cement added as absorbent to bottom of inner bag prior to filling and as a "cap" after filling.		
Box Preparation	Poly box bag/cardboard box liner Up to 90 pounds Portland cement added as absorbent to bottom of box prior to filling. The sludge was "capped" with up to 90 pounds Portland cement.		
Primary Waste Parameter(s)	Organic Matrix		
Special Notes	Based on RTR results of drums of other RF bulk or direct loaded sludge, this waste may contain prohibited liquids on top of the sludge, within the drum bag, or between the rigid liner and drum. Visual examination of this bulk or direct loaded sludge packaged in 55, 83, or 85-gallon drums would not provide additional relevant information to the RTR examination. May have cement in drum, rigid liner, and/or poly drum bag. IDC RF-995 replaced IDC RF-095 in early 1972. RFP discontinued shipping sewer sludge to INL in 1976. [3] Historical ID typically begins with "IDRF0995." Limited amounts of drums assigned IDC RF-995 were generated from Building 771 Plutonium Recovery Operations (e.g. drum prefix 0001). [3] These containers will require AKE evaluation.		

N/A		*N/A*	*N/A*
N/A	**RF-998**	**Pits 11 & 12 Cargos and Bins**	
WIPP Status	N/A – Overpack Container		
Waste Description	IDC RF-998 is not to be used for characterizing waste (see Special Notes). Most of the waste in the cargos and bins was originally generated at Rocky Flats and disposed in Pits 11 and 12 at the RWMC prior to October 1972. The waste packaged in 30- and 55-gallon drums of waste was subsequently retrieved during the EWR Project and the IDR Project and placed into cargo containers or bins which were transferred to TSA-RE. Some 30-gallon drums had been historically overpacked into 55-gallon drums. During retrieval, some 55-gallon drums were overpacked into 83-gallon drums prior to placing in the bins or cargo containers. [80, 97, 119, 120]		
MIII Bin Configuration	Breached or externally contaminated drums were wrapped in plastic prior to placing in bins. Typically 8 drums but may contain 3 to 12 drums (including 30-, 55- and 83-gallon drums) were placed in each bin. [97, 119, 120]		
Cargo Container Configuration	Intact containers were placed in the cargo containers. Typically 72 drums but may contain 48 to 96 drums (including 30-, 55- and 83-gallon drums) were placed in each cargo container. Absorbent (~50 pounds) was spread on the floor of each cargo container. The floors and area extending one foot up the sidewalls of the cargo containers was waterproofed with a sealant material called Peda-Guard II. [97, 119, 120]		
Primary Waste Parameter(s)	N/A – overpack container		
Special Notes	IDC RF-998 is reserved to track cargos and bins packaged with drums retrieved during the EWR Project and the IDR Project and is not to be used for characterizing waste. See SD-179 for recommended IDCs for bins characterized as bins. There is a low probability that these cargo containers and bins contain drums of roaster oxide waste or drums that may contain roaster oxide (reference IDCs RF-751). [80] One drum retrieved from Pit 12 in April 1978 was labeled "Cyanimide – cyanide poisoning." [120] Majority of drums contain debris waste. Some drums may contain sludge, salt or soil. Intact drums unloaded from cargos and bins are assigned the applicable IDC (e.g., RF-741 through RF-751 or UN-000). Empty cargos and bins may be PCB regulated. A PCB case-by case evaluation is required prior to waste profiling or treatment.		

N/A		*N/A*	*N/A*
N/A	**RF-999**	**Pits 11 & 12 Cargos and Bins with Roaster Oxide**	
WIPP Status	N/A – Overpack Container		
Waste Description	IDC RF-999 is not to be used for characterizing waste (see Special Notes). Most of the waste in the cargos and bins was originally generated at Rocky Flats and disposed in Pits 11 and 12 at the RWMC prior to October 1972. The waste packaged in 30- and 55-gallon drums of waste was subsequently retrieved during the EWR Project and the IDR Project and placed into cargo containers or bins which were transferred to TSA-RE. Some 30-gallon drums had been historically overpacked into 55-gallon drums. During retrieval, some 55-gallon drums were overpacked into 83-gallon drums prior to placing in the bins or cargo containers. [80, 97, 119, 120]		
MIII Bin Configuration	Breached or externally contaminated drums were wrapped in plastic prior to placing in bins. Typically 8 drums but may contain 3 to 12 drums (including 30-, 55- and 83-gallon drums) were placed in each bin. [97, 119, 120]		
Cargo Container Configuration	Intact containers were placed in the cargo containers. Typically 72 drums but may contain 48 to 96 drums (including 30-, 55- and 83-gallon drums) were placed in each cargo container. Absorbent (~50 pounds) was spread on the floor of each cargo container. The floors and area extending 1 foot up the sidewalls of the cargo containers was waterproofed with a sealant material called Peda-Guard II. [97, 119, 120]		
Primary Waste Parameter(s)	N/A – overpack container		
Special Notes	IDC RF-999 is reserved to track cargos and bins packaged with drums retrieved during the EWR Project and the IDR Project and is not to be used for characterizing waste. See SD-179 for recommended IDCs for bins characterized as bins.There is a high probability that these cargo containers and bins contain drums of roaster oxide waste or drums that may contain roaster oxide (reference IDCs RF-751). [80] One drum retrieved from Pit 12 in April 1978 was labeled "Cyanimide – cyanide poisoning." [120] Majority of drums contain debris waste. Some drums may contain sludge, salt or soil. Intact drums unloaded from cargos and bins are assigned the applicable IDC (e.g., RF-741 through RF-751 or UN-000). Empty cargos and bins may be PCB regulated. A PCB case-by case evaluation is required prior to waste profiling or treatment.		

5.0 REFERENCES

NOTE: *AMWTP documents such as procedures, AK Reports, AKRs, and operating instructions are cited without revision numbers or dates. The most recent revisions of these documents are available through the AMWTP Electronic Data Management System. Previous revisions are available upon request through Document Services.*

1. RPT-TRUW-12, AMWTP Waste Stream Designations

2. INEL-96/0280, Acceptable Knowledge Document for INEEL Stored Transuranic Waste –Rocky Flats Plant Waste, Rev. 3, February 28, 2003 [P368A]

3. WM-F1-82-021, Content Code Assessments for INEL Contact-Handled Stored Transuranic Wastes, October 1982 [P024A]

4. RPT-TRUW-13, Acceptable Knowledge Document for INL Stored Transuranic Waste-Mound Plant Waste

5. RPT-TRUW-04, Acceptable Knowledge Document for the Battelle Columbus Laboratories Building JN-4 Plutonium Laboratory

6. RPT-TRUW-30, Acceptable Knowledge Summary for Supercompacted Debris Waste (BN510)

7. Waste/Packaging Configuration Inconsistent with RF-IDC 001 [AKR-04-76]

8. Waste Matrix Code (WMC) assignment for the Rocky Flats IDC 310 Graphite Scarfings [AKR-05-237]

9. Waste Matrix Code (WMC) Revision and EPA HWN Assignment for the Rocky Flats IDC 372 Grit [AKR-05-239]

10. WMC Assignment for the RF IDCs 430 and 431 Resin Debris Wastes and RF IDCs 432 and 822 Cemented Resin Homogeneous Solid Waste [AKR-05-240]

11. Memorandum to Eric Schweinsberg from Carolyn Abbott, Discrepancy Report D034A - New Packaging Configuration for Rocky Flats (RF) IDC 001 (First Stage Sludge), CKA-005-2005, August 3, 2005 [D034A]

12. Memorandum to Eric Schweinsberg from Carolyn Abbott, Discrepancy Report D035A - Assessment of HWN D001 Assigned to Rocky Flats (RF) Filter Waste (IDCs 335, 338, 490), CKA-007-2005, August 9, 2005 [D035A]

13. Wrong WMC listed in WTS (for RF-IDC 393 SS&C Heel) [AKR-05-245, also addresses AKR-05-257]

14. Memorandum to Eric Schweinsberg from M. L. Johnson, Discrepancy Report D042A - Assessment of Acceptable Knowledge Information in AMWTP-RPT-TRUW-05 for Rocky Flats Metal Waste, MLJ-004-2005, September 15, 2005 [D042A]

15. Waste Parameter Assignment Change for RF IDC 432 [AKR-05-299]

16. Letter to R. K. Flitcraft from D. Davis, Jr., Shipment of Transuranic Waste From Mound Laboratory to the NRTS, August 14, 1974 [C416A]

17. EGG-WM-6503, TRU Waste Sampling Program: Volume I – Waste Characterization, September 1985 [P015A]

18. Waste Matrix Code (WMC) Assignments for Mound Debris Wastes [AKR-05-234]

19. MD IDCs With Inner Packages, RTR Operator Requested IDC Change, Rejected by AK [AKR-05-311]

20. RFP-3186, History of Rocky Flats Waste Streams, March 10, 1982 [P090A]

21. Memorandum to Eric Schweinsberg from Micky L. Johnson, Discrepancy Report D049A - Assessment of Acceptable Knowledge Information in AMWTP-RPT-TRUW-05 for Mound Metal Waste, MLJ-007-2005, December 28, 2005 [D049A]

22. Absorbent in RF waste containers absent or present in greater or lesser amounts than described in AK [AKR-05-258, also addresses AKR-03-12, AKR-03-14, AKR-03-15, AKR-03-16, AKR-03-26 (IDC 007), AKR-03-36 R1 (IDCs 007, 803), AKR-04-42 R1, AKR-04-44, AKR-04-45, AKR-04-46, AKR-04-48 (IDC 807), AKR-04-53, AKR-04-56, AKR-04-57, AKR-04-62, AKR-04-63, AKR-04-64, AKR-04-72, AKR-04-83 (IDC 807), AKR-04-84, AKR-04-100, AKR-04-103, AKR-04-112 R1, AKR-04-113, AKR-04-116 R1, AKR-04-117, AKR-04-123 (12 quarts Oil-Dri®), AKR-04-125, AKR-04-131, AKR-04-157, AKR-04-158, AKR-04-159, AKR-04-174, AKR-04-182, AKR-05-245, and AKR-05-257]

23. Unexpected packaging configuration – Unexpected Liner Configuration (in RF waste) [AKR-05-238, also addresses AKR-03-25, AKR-03-35 R1, AKR-03-38 R1, AKR-03-39, AKR-04-49, AKR-04-50 R1, AKR-04-54 R1, AKR-04-58, AKR-04-61, AKR-04-65, AKR-04-66, AKR-04-67 R1, AKR-04-68, AKR-04-70, AKR-04-118, AKR-04-128, AKR-04-133, AKR-04-156, AKR-04-161, AKR-04-162, AKR-04-163, AKR-04-181, AKR-04-196, AKR-05-219]

24. Unexpected Material (plastic and metal debris) identified during RTR [AKR-04-137, also addresses AKR-03-19, AKR-04-114, AKR-04-115 R1, AKR-04-121, AKR-04-130, AKR-04-134, AKR-04-160, AKR-04-173 R1 (batteries), AKR-04-184 (glass), AKR-05-217, AKR-05-218]

25. Unexpected packaging configuration – Absence of Plywood Spacer [AKR-04-154] and Unexpected packaging configuration – Plywood Spacer (in MD waste) [AKR-05-287]

26. More than 2 layers of containment (RF) [AKR-04-47, also addresses other AKRs associated with drum bag liners or inner packaging layers including AKR-03-13, AKR-04-59, AKR-04-69, AKR-04-74 for Fiber-Paks, AKR-04-87, AKR-04-126, AKR-05-209]

27. Unexpected packaging configurations – variable drum bagging (MD Waste) [AKR-04-175, also addresses AKR-05-329]

28. Filtered bag identified as method of bag closure [AKR-03-18, also addresses AKR-03-22, AKR-04-41 R1, AKR-05-312]

29. Twisted and tied identified as method of bag closure [AKR-04-132, also addresses AKR-05-242, R2]

30. Unexpected material (rubber debris) identified during RTR (of MD sludge waste [AKR-04-176, also addresses AKR-05-249 for leaded rubber gloves in plastic waste and AKR-05-289 R1 for metal and glass debris in combustible waste])

31. Unexpected absorbent (Vermiculite) identified in Mound Plant Waste [AKR-05-224]

32. WM-F1-81-015, Idaho National Engineering Laboratory Stored Transuranic Waste Characterization: Nonradiological Hazards Identification, September 1981 [P319A]

33. MD-20734, Technical Manual– Plutonium Processing-Material Control, Rev. 4, September 15, 1973 [P384A]

34. MD-70205, Technical Manual -TRU Waste Management, various revisions from January 1, 1976 through December 19, 1988 [P381A]

35. Letter to M. L. Mullins from Harry H. Hill, Packaging Criteria for Transuranic Waste Shipment To INEL, July 25, 1978 [C376A]

36. Inconsistent calculation of weight per pint of Florco absorbent [AKR-05-331]

37. Unexpected Material (ceiling tiles) identified during RTR (of IDC RF-374) [AKR-03-17, also addresses other wastes identified in AKR-03-11 (metal), AKR-03-27 (metal), AKR-04-73 (Poly Bottles), AKR-05-323 (floor tile), and AKR-07-469 (floor tiles)]

38. Lead Cell Batteries with Residual Liquid less than One Inch (in IDC RF-480 waste) [AKR-04-71]

39. Container of IDC MD-825 (Equipment Drums – Non-combustible) identified with inner containers of IDC MD-832 (Contaminated Mercury) [AKR-05-300]

40. Unspecified absorbent material may be present in RF-IDC 007 containers [AKR-03-37]

41. Residual Liquid in IDC RF-004 waste [AKR-04-43]

42. Catch pan added to all direct feed drums to supercompactor [AKR-05-288]

43. LA-13616-MS, Determination of H_2 Diffusion Rates through Various Closures on TRU Waste Bag-Out Bags, June 1999 [P445A]

44. IDC RF-292 on container 10026516 changed to IDC RF-290 incorrectly [AKR-05-236]

45. Unexpected materials (plastic waste) in IDC MD-836 containers with absorbents and plastic waste [AKR-06-366]

46. MD-70180, Technical Manual-Mound Facility Radioactivity Liquid Waste Disposal, January 1, 1981 through October 24, 1984 [P379A]

47. Unexpected packaging (plastic drum bag) in IDC MD-836 containers [AKR-06-374]

48. Cement cap and variable layers of solidification discovered during coring of IDC MD-836 drums [AKR-06-375]

49. Large PCB items found in box of IDC RF-480 [AKR-06-380]

50. RPT-TRUW-60, Acceptable Knowledge Document for INL Stored Transuranic Waste-Bettis Atomic Power Laboratory

51. EDF-3395, Summary RTR Data Collected During 3,100 m^3 Project, February 3, 2003 [P358A]

52. EDF-2710, Comparison of Real Time Radiography (RTR) and Visual Examination Results of the Stored Waste Examination Pilot Plant Certified Waste Sampling Program, December 17, 2002 [included in P321A]

53. ICP/EXT-04-00717, Summary of Rocky Flats Plant Waste Buried in the Subsurface Disposal Area, Edward Vejvoda, Revision 0, April 2005 [P759S]

54. RPT-TRUW-56, Acceptable Knowledge Document for INL Stored Transuranic Waste – Rocky Flats Plant

55. WMC change for IDC RF-374 from S5420 to S5490 [AKR-06-407]

56. Memorandum from Kathy Leonard to Certification Leads, et. al., SPO Guidance – 30-gallon Drum in Mound Debris Container Clarification, KL-001-2006, January 8, 2006 [C533A]

57. CCP-AK-INL-004, Central Characterization Project Acceptable Knowledge Summary Report for Rocky Flats Combustibles and Plastic Stored at the Idaho National Laboratory: Waste Stream ID-RF-S5300-A [P633A]

58. IDC Change from RF-371 to RF-374 [AKR-06-408]

59. IDC Change from RF-371 to RF-697 [AKR-06-411]

60. IDC Change from RF-480 to RF-337 [AKR-06-410]

61. Kraft Tubes in IDC RF-300 waste [AKR-04-75]

62. Unexpected Dense Waste Items in Mound Debris Drums [AKR-06-358]

63. IDCs RF-368 and RF-370 WMC Change from S5123 to S5190 [AKR-06-427]

64. IDCs RF-391 and RF-392 WMC Change from S5129 to S5190 [AKR-06-428]

65. IDC RF-950 WMC Change from S5112 to S5490 [AKR-06-429]

66. Memorandum to File from Carolyn K. Abbott, Discrepancy Report D060A - Discrepancy in Acceptable Knowledge Information for Item Description Codes 806 and 823 Waste Reported in INEL-96.0280 Report, Acceptable Knowledge Document for INEEL Stored Transuranic Waste – Rocky Flats Plant Waste, Revision 03, Dated February 28, 2003 Section 17 and Accept able Knowledge Documents in the Acceptable Knowledge Record, CKA-001-06, August 2, 2006 [D060A]

67. CCP-AK-INL-001, Central Characterization Project Acceptable Knowledge Summary Report for Waste Retrieved from Designated Areas within the Subsurface Disposal Area at the Idaho National Laboratory [P647A]

68. EDF-1809, Waste Stream Summary Sheet– First/Second Stage Sludge, Rev. 5, INEEL, January 6, 2003 [P226A]

69. EDF-2657, Waste Stream Summary Sheet–Building 374 Sludge, Rev. 4, INEEL, January 6, 2003 [P238A]

70. EDF-1927, Waste Stream Summary Sheet–Filters and Insulation, Rev. 5, INEEL, January 6, 2003 [P225A]

71. EDF-3019, Waste Stream Summary Sheet–Fire Brick/Coarse Fire Brick, Rev. 1, INEEL, January 6, 2003 [included in P306A]

72. EDF-1926, Waste Stream Summary Sheet–Glass (Except Raschig Rings), Rev. 3, INEEL, January 6, 2003 [P224A]

73. EDF-1686, Waste Stream Summary Sheet–Light Metals, Rev. 3, INEEL, January 3, 2003 [P222A]

74. Draft Waste Stream Profile Form INW164.001-Solidified Organics and Supporting Documentation, April 10, 2002 [U099A]

75. INEL-95/0281, Idaho National Engineering Laboratory Code Assessment of the Rocky Flats Transuranic Waste, July 1995 [P016A]

76. Bottle of waste buried in a drum of IDC 002 sludge waste [AKR-06-423]

77. Change the IDC from RF-480 to RF-440 based on RTR data [AKR-06-422]

78. IDC change incorrectly changed (from IDC RF-371) to RF-374 [AKR-07-453]

79. Individual IDC BN-508 debris waste drums generated during repackaging may not fit the WMC S5420 description, although the physical waste form (i.e., Debris Waste) is valid [AKR-05-255]

80. ICP/EXT-04-00248, Historical Background Report for Rocky Flats Plant Waste Shipped to the INEEL and Buried in the SDA from 1954 to 1971, March 2005 [P443A]

81. Letter to Ralph D. Falconer from C. K. Gaddis, Transuranic Waste Characterization Questionnaires, May 17, 1993 [C549]

82. CCP-PK-RL-101, Central Characterization Project Process Knowledge Summary Report For Hanford Plutonium Finishing Plant Contact-Handled Transuranic Debris Waste, 85-Gallon Overpacked Drums, Waste Stream: MPFPDD, Rev.2, June 4, 2010 [P853A]

83. CCP-PK-RL-102, Central Characterization Project Process Knowledge Summary Report For The Hanford 325 Building Radiochemical Processing Laboratory Contact-Handled Transuranic Debris Waste, 85 Gallon Overpacked Drums, Waste Stream: RLM325D.001, Rev. 2, June 4, 2010 [P854A]

84. CCP-PK-RL-103, Central Characterization Project Process Knowledge Summary Report For Hanford 231-Z Building Contact-Handled Transuranic Debris Waste, 85-Gallon Overpacked Drums, Waste Stream: RLM231ZD.001, Rev. 2, June 4, 2010 [P855A]

85. MP-TRUW-8.2, Quality Assurance Project Plan

86. MP-TRUW-8.13, Collection, Review, and Management of Acceptable Knowledge Documentation

87. D075A, Identification of containers of roaster oxide (roasted depleted uranium) sent from Rocky Flats Plant to Idaho, Rev. 1, October 20, 2009 [D075A]

88. Detection of ^{137}Cs (^{90}Sr) in containers of RF Waste (IDC RF-002 Second Stage Sludge) [AKR-06-376]

89. WMC identified in WTS does not match WMC assigned to containers by CCP [AKR-06-405]

90. Recommended IDC change from RF-376 to RF-361 [AKR-05-301]

91. Interview Record of Vince Medina, Alternate packaging configuration of IDC RF graphite waste includes Kraft Tubes, September 24, 2007 [C550S]

92. IDC change from RF-374 to RF-292 [AKR-07-505]

93. IDC change from RF-374 to RF-432 [AKR-07-444]

94. IDC change from RF-336 to RF-292 [AKR-07-486]

95. IDC RF-960 WMC Change from S5420 to S5490 [AKR-07-543]

96. IDC RF-241 WMC Change from S5420 to S5490 [AKR-07-544]

97. Data from the Transuranic Waste Management Information System (TWMIS) [U127A]

98. Waste Isolation Pilot Plant Transuranic Waste Baseline Inventory Report, CAO-94-1005, Rev. 2, June 1995 [P744A]

99. Letter to AK Record from Jeff Harrison, Review of Historical Rocky Flats Waste Shipment Records, January 31, 2003 [C267A]

100. Dimensions and volumes for Vollrath cans (e.g., 8801 and 8802) used to package RF waste. [U219S]

101. Memorandum to file from Carolyn K. Abbott, Acceptable Knowledge Evaluation of Containers with Historical Data Issues, CKA-001-08, February 13, 2008 [C552S]

102. MD-70205, Technical Manual - TRU Waste Management, January 1, 1976 through December 19, 1988 [P510A]

103. MD-10203, Technical Manual - Mound WIPP Certification Program For Newly Generated Contact Handled (CH) Waste, Revisions 1 and 6, June 1, 1985 and April 14, 1989 [P385A]

104. 9257, Procedure for Packaging and Handling Pu Waste and Residue Drums, March 29, 1974 [P367A]

105. CO-1073-A, Packaging and Handling Plutonium Waste and Residues (U), August 8, 1977 [P370A]

106. CO-4034-A, Packaging Wastes for Shipment Off-Site (U), September 2, 1977 [P371A]

107. WO-4034-A, Packaging Wastes for Shipment Offsite (U), August 16, 1985 [P372A]

108. WO-4003-A, Transuranic Solid Waste Inspection (U), November 11, 1985 [P026A]

109. WO-4034-C, Packaging Wastes for Shipment Offsite (U), October 13, 1986 [P063A]

110. I-1002-C/0, Packaging and Handling Line- and Nonline-Generated Materials (U), April 26, 1988 [P008A]

111. WO-4034-F, Waste Packaging Requirements, July 8, 1988 [P064A]

112. IDO-10074, Criteria for Packaging Transuranic Waste for Receipt at the Idaho National Engineering Laboratory Radioactive Waste Management Complex Offsite Generated Waste, Rev. 1, June 1980 [P465A]

113. INST-OI-45, Drum Filter Installation

114. INST-OI-50, WMF-615 Filter Insertion Operations

115. INST-FOI-20, Supercompactor and Post-Compaction Operations

116. INST-OI-24, Packaging Newly Generated Radioactive Waste

117. IDC change for boxes/bins [AKR-10-688]

118. E-mail from James B. Zovi to Steve Carpenter, AMWTP Macro Rejects – PFNW, October 2, 2008 (C568S)

119. TREE-1079, Initial Drum Retrieval Interim Report (July 1974 to September 1976), D. H. Card and D. K. Wang, May 1977 [P653S]

120. TREE-1286, Initial Drum Retrieval Final Report, K. B. McKinley and J. D. McKinney, August 1978 [P652S]

121. TREE-1321, Early Waste Retrieval Final Report, J. R. Bishoff and R. J. Hudson, August 1979 [P654S]

122. TREE-1061, Containment of Transuranic Contamination at the Early Waste Retrieval Project, J. L. Harness and J. D. McKinney, January 1977[P655S]

123. TREE-1047, Early Waste Retrieval Interim Report (July 1, 1975 to September 30, 1976), D. H. Card, February 1977 [P664A]

124. TREE-1265, Early Waste Retrieval Interim Report (1 October 1976 through 30 September 1977), K. B. McKinley and J. D. McKinney, May 1978 [P753A]

125. IDC change from RF-241 to RF-432 [AKR-09-633]

126. CCP-PK-NTS-003, Central Characterization Project Process Knowledge Summary Report For Nevada Test Site Lawrence Berkeley National Laboratory Waste, Waste Streams: NTLBL-S5400 and NTLBL-S3900, Rev. 0, November 6, 2008 [P749A]

127. CCP-PK-NTS-001, Central Characterization Project Process Knowledge Summary Report For Nevada Test Site Lawrence Livermore National Laboratory Waste, Waste Streams: NTLLNL-S5400 and NTLLNL-S3900, Rev. 1, November 21, 2008 [P748A]

128. Telephone Conversation with Robert J. Hudson, retired RWMC RCT, "Drums retrieved in 1978 from Trench 5 marked 'Cluster Fragmentation Bomb'" February 26, 2009 [C617A]

129. CCP-PK-NTS-005, Central Characterization Project Process Knowledge Summary Report for Nevada Test Site Lynchburg Research Center Debris Waste, Waste Stream: NTLRC-S5400, Rev. 0, December 11, 2008 [P784A]

130. CCP-AK-INL-009, Central Characterization Project Acceptable Knowledge Summary Report for Idaho National Laboratory, Nevada Test Site, Lawrence Livermore National Laboratory Waste, Waste Streams: ID-NTLLNL-S5400 and ID-NTLLNL-S3900, Rev. 1, May 19, 2009 [P785A]

131. Excel Spreadsheets of Container Information from 1970, 1971 and 1972 RF Load Lists, March 24, 2009 [U215A]

132. CRDL-950351-009, A Survey of the Rocky Flats Division Waste Streams, C. E. Plock, June 30, 1972 [P124A]

133. E-mail from Dave Preston to Micky Johnson: Pre filter split, June 3, 2009 [C834A]

134. AMWTP Form-1900, DOE CH-TRU Waste Profile for NTLBL-S3900, NTS Berkeley Solidified Liquids (NT-210), April 22, 2009 [P800A]

135. AMWTP Form-1900, DOE CH-TRU Waste Profile for NTLBL-S5400, Lawrence Berkeley Heterogeneous Debris (NT-211), November 25, 2008 [P796A]

136. AMWTP Form-1900, DOE CH-TRU Waste Profile for NTLLNL-S3900, LLNL Solidified Sludge and Liquids (NT-212), November 25, 2008 [P797A]

137. Interview of Dave Preston concerning variation of inner packaging of IDC NT-212 waste, April 20, 2009 [C820A]

138. AMWTP Form-1900, DOE CH-TRU Waste Profile for NTLLNL-S5400, LLNL Heterogeneous Debris (NT-213), November 25, 2008 [P798A]

139. AMWTP Form-1900, DOE CH-TRU Waste Profile for NTRLC-S5400, NTS Lynchburg Heterogeneous Debris (NT-214), January 13, 2009 [P799A]

140. CCP-PK-NTS-006, Central Characterization Project Process Knowledge Summary Report for Stored Contact-Handled Transuranic Debris Waste Generated by EG&G Energy Measurements, Inc. at the North Las Vegas Facility, Waste Stream NTS-EG&G-HET, Rev. 0, April 9, 2009 [P790A]

141. AMWTP Form-1900, DOE CH-TRU Waste Profile for NTS-EG&G-HET, NTS EG&G Heterogeneous Debris (NT-215), April 22, 2009 [P801A]

142. CCP-PK-NTS-007, Central Characterization Project Process Knowledge Summary Report for Tonopah Test Range/Roller Coaster Project Contact-Handled Transuranic Waste, Waste Stream: NTS-TTR-HET, Rev. 0, April 9, 2009 [P791A]

143. AMWTP Form-1900, DOE CH-TRU Waste Profile for NTS-TTR-HET, NTS Roller Coaster Debris (NT-216), April 22, 2009 [P802A]

144. CCP-PK-NTS-4, Central Characterization Project Process Knowledge Summary Report for Contact-Handled Transuranic Waste from Decontaminating Rocky Flats Classified Waste at the Nevada Test Site, Waste Stream: NT-RF-DECON, Rev. 0, April 15, 2009 [P792A]

145. AMWTP Form-1900, DOE CH-TRU Waste Profile for NT-RF-DECON, NTS RF Decon Debris (NT-217), April 22, 2009 [P803A]

146. CCP-PK-NTS-008, Central Characterization Project Process Knowledge Summary Report for Nevada Test Site Lawrence Livermore and Lawrence Berkeley National Laboratory Waste, Waste Stream: NTLLLBL-S5400, Rev. 0, April 15, 2009 [P793A]

147. AMWTP Form-1900, DOE CH-TRU Waste Profile for NTLLLBL-S5400, NTS Livermore and Berkeley Combined Debris (NT-218), April 22, 2009 [P804A]

148. CCP-PK-NTS-009, Central Characterization Project Process Knowledge Summary Report for Nevada Test Site Inhalation Toxicology Research Institute Waste, Waste Stream NTS-ITRI-S5310, Rev. 0, April 17, 2009 [P794A]

149. AMWTP Form-1900, DOE CH-TRU Waste Profile for NTS-ITRI-S5310, NTS ITRI Debris (NT-219), April 22, 2009 [P805A]

150. CCP-PK-NTS-010, Central Characterization Project Process Knowledge Summary Report for Nevada Test Site Visual Examination and Repackaging Building Decon and Maintenance Waste, Waste Stream: NTVERB-S5400, Rev. 0, April 17, 2009 [P795A]

151. AMWTP Form-1900, DOE CH-TRU Waste Profile for NTVERB-S5400, NTS Decon and Maintenance Debris (NT-220), April 22, 2009 [P806A]

152. Rocky Flats Plant Item Description Codes List, September 1, 1977 [U230A]

153. Rocky Flats Environmental Technology Site Backlog Waste Reassessment Baseline Book, May 5, 1994 through March 5, 2001 [P052A]

154. CCP-AK-INL-010, Central Characterization Project Acceptable Knowledge Summary Report for Idaho National Laboratory, Nevada Test Site, Lawrence Berkeley National Laboratory Waste, Waste Streams: ID-NTLBL-S5400 and ID-NTLBL-S3900, Revision 0, June 18, 2009 [P810A]

155. CCP-AK-INL-011, Central Characterization Project Acceptable Knowledge Summary Report for Idaho National Laboratory, Nevada Test Site, Lynchburg Research Center Debris Waste, Waste Stream: ID-NTLRC-S5400, Revision 0, August 13, 2009 [P818A]

156. CCP-AK-INL-012, Central Characterization Project Acceptable Knowledge Summary Report for Idaho National Laboratory, Contact-Handled Transuranic Waste from Decontaminating Rocky Flats Classified Waste at the Nevada Test Site, Waste Stream: ID-NT-RF-DECON, Revision 0, August 4, 2009 [P819A]

157. CCP-AK-INL-013, Central Characterization Project Acceptable Knowledge Summary Report for Idaho National Laboratory, Nevada Test Site, EG&G Energy Measurements, INC. (North Las Vegas Facility) Debris Waste, Waste Stream: ID-NTS-EG&G-HET, Revision 1, September 15, 2009 [P809A]

158. CCP-AK-INL-014, Central Characterization Project Acceptable Knowledge Summary Report for Idaho National Laboratory, Tonopah Test Range/Roller Coaster Project Contact-handled Transuranic Waste, Waste Stream: ID-NTS-TTR-HET, Revision 0, July 15, 2009 [P820A]

159. CCP-AK-INL-015, Central Characterization Project Acceptable Knowledge Summary Report for Idaho National Laboratory, Nevada Test Site, Lawrence Livermore and Lawrence Berkeley National Laboratory Waste, Waste Stream: ID-NTLLLBL-S5400, Revision 0, August 6, 2009 [P821A]

160. CCP-AK-INL-016, Central Characterization Project Acceptable Knowledge Summary Report for Idaho National Laboratory, Nevada Test Site, Inhalation Toxicology Research Institute Waste, Waste Stream: ID-NTS-ITRI-S5310, Revision 0, July 27, 2009 [P822A]

161. CCP-AK-INL-017, Central Characterization Project Acceptable Knowledge Summary Report for Idaho National Laboratory, Nevada Test Site, Visual Examination and Repackaging Building Decon and Maintenance Waste, Waste Stream: ID-NTVERB-S5400, Revision 0, August 6, 2009 [P823A]

162. CCP-PK-GEV-400, Central Characterization Project Process Knowledge Summary Report For General Electric Vallecitos Nuclear Center Waste Stream: GEVNC.02 – Contact-Handled Hot Cell Debris Waste, Rev. 1, November 19, 2009 [P836A]

163. AMWTP Form-1900, DOE CH-TRU Waste Profile for GEVNC.02, GEVNC Hot Cell 4 Debris (IDC GV-222), April 19, 2010 [P869A]

164. INL/EXT-10-17600, Process Knowledge Summary Report for Materials and Fuels Complex Contact-Handled Transuranic Debris Waste, Rev. 2, April 10, 2010 [P842A]

165. AMWTP Form-1687, Non-AMWTP Generator Waste Profile for ID-MFC-S5490, MFC CH-TRU Heterogeneous Debris Waste (IDC AW-167), April 20, 2010 [P861A]

166. CCP-PK-LLNL-001, Central Characterization Project Acceptable Knowledge Summary Report for Lawrence Livermore National Laboratory Waste, Waste Streams: LL-M001-S5400, LL-W019-S3900, LL-T004-S3131, Rev. 1, March 22, 2010 [P839A]

167. AMWTP Form-1900, DOE CH-TRU Waste Profile for LL-W019-S3900, Lawrence Livermore National Laboratory Solidified Inorganics and Solidified Organics (LL-212), May 4, 2010 [P870A]

168. AMWTP Form-1900, DOE CH-TRU Waste Profile for LL-M001-S5400, Lawrence Livermore National Laboratory Heterogeneous Debris (LL-213), May 4, 2010 [P871A]

169. AMWTP Form-1900, DOE CH-TRU Waste Profile for LL-T004-S3141, Lawrence Livermore National Laboratory Salts (LL-221), May 4, 2010 [P872A]

170. Integrated Waste Tracking System Material and Waste Characterization Profile No. 3526: Casting Lab TRU Waste, profile date April 1, 1999, printed on May 31, 2010 [P709A]

171. Integrated Waste Tracking System Material and Waste Characterization Profile No. 3527: Analytical Lab TRU Waste, profile date April 1, 1999, March 11, 2010. [P708A]

172. INEEL/INT-99-00081, EDF-RWMC-1048, Characterization of Wastes Generated at Argonne National Laboratory-West with IDCs of 161, 162, and 163, C. B. Ransom, April 7, 1999, Revision 0 [P312A]

173. Integrated Waste Tracking System Material and Waste Characterization Profile No. 3581T: ANL-W ALC Glassware, Paper, Poly, and Miscellaneous Hardware IDC-161profile date May 13, 1991, May 26, 2009 [U229S]

174. Integrated Waste Tracking System Material and Waste Characterization Profile No. 3522T: AW162CH: ANL-W FMF EFL ZR-U-PU Fuel Casting Alloys Residues, profile date February 1, 1989, May 13, 2009 [U227S]

175. Integrated Waste Tracking System Material and Waste Characterization Profile No. 3523T: AW163CH: ANL-W ACL cold-Line Absorbed Liquid, Misc., Hardware and Poly, profile date September 14, 1988, May 13, 2009 [U228S]

176. Integrated Waste Tracking System Material and Waste Characterization Profile No. 2815: MLLW Generated at HFEF-WCA, profile date December 1, 1997, July 24, 2008 [P728A]

177. Integrated Waste Tracking System Material and Waste Characterization Profile No. 2815A: CH-MLLW generated at HFEF-WCA, profile date May 12, 1998, July 24, 2008 [P711A]

178. Integrated Waste Tracking System Material and Waste Characterization Profile No. 3583T: WETP Process Waste IDC-164, profile date July 24, 2002, January 12, 2009 [P729A]

179. Integrated Waste Tracking System Material and Waste Characterization Profile No. 3978P: HFEF CH-MTRU (GGE & Ash Stabilization Experiments clean-up), profile date September 9, 2003, May 13, 2009 [P712A]

180. RPT-TRUW-82, Acceptable Knowledge Document for Hanford Debris Waste Shipped to AMWTP

181. RPT-TRUW-06, AMWTP AK Document for AMWTP Waste

182. AMWTP Form-1900, DOE CH-TRU Waste Profile for MPFPDD, Hanford Plutonium Finishing Plant Heterogeneous Debris (RL-712), Rev. 1, June 8, 2010 [P883A]

183. AMWTP Form-1900, DOE CH-TRU Waste Profile for RLM325D.001, Hanford 325 Building Heterogeneous Debris (RL-714), Rev. 1, June 8, 2010 [P884A]

184. AMWTP Form-1900, DOE CH-TRU Waste Profile for RLM231ZD.001, Hanford 231-Z Building Heterogeneous Debris (RL-716), Rev. 1, June 8, 2010 [P885A]

185. IDC change from RF-370 to RF-337 [AKR-10-694]

186. RPT-TRUW-83, Acceptable Knowledge Summary for Supercompacted Debris Waste

187. INST-OI-88, Spill/Leak Response and Cleanup

188. MP-TRUW-8.40, INL Waste Acceptance and Transfers

189. MP-TRUW-8.41, Offsite Waste Acceptance

190. HNF-6489, Acceptable Knowledge Document for Plutonium Finishing Plant Mixed Debris Waste Stream MPFPD, Rev. 1, September 21, 2006. [P1024A]

191. HNF-36515, Acceptable Knowledge Document for the Richland Mixed Plutonium Finishing Plant Comprehensive Debris Waste Stream, RLMPFPCD, Rev. 1, June 5, 2009. [P1023A]

192. HNF-30810, Acceptable Knowledge Document for the 325 Building Radiochemistry Laboratory Mixed Debris Waste, RLM325D, Rev. 1, July 17, 2007.[P1025A]

193. HNF-32128, Acceptable Knowledge Document for Richland 231-Z Mixed Debris Waste RLM231ZD, Rev. 1, May 20, 2008. [P1026A]

194. AMWTP Form-1687, Non-AMWTP Generator Waste Profile for LA-CIN02.001, Los Alamos National Laboratory TA-50 Radioactive Liquid Waste Treatment Facility Homogeneous Inorganic Solid (LA-002), August 6, 2007, [P769A]

195. CCP-AK-LANL-004, Central Characterization Project for Los Alamos National Laboratory, TA-50 Radioactive Liquid Waste Treatment Facility Homogeneous Inorganic Solids, Waste Streams: LA-MIN03-NC.001 and LA-CIN02.001, Rev. 9, August 26, 2009 [P766A]

196. AMWTP Form-1687, Non-AMWTP Generator Waste Profile for LA-MIN03-NC.001, Los Alamos National Laboratory TA-50 Radioactive Liquid Waste Treatment Facility Homogeneous Inorganic Solids (LA-003), January 4, 2007 [P770A]

197. CCP-AK-LANL-006, Central Characterization Project Acceptable Knowledge Summary Report for Los Alamos National Laboratory TA-55 Mixed Transuranic Waste, Waste Streams: LA-MHD01.001, LA-CIN01.001, LA-MIN02-V.001 and LA-MIN04-S.001, Rev 9, January 27, 2009 [P817A]

198. AMWTP Form-1900, DOE CH-TRU Waste Profile for LA-CIN01.001, Los Alamos National Laboratory Solidified Inorganics (LA-006), Rev. 1, Draft [P1145A]

199. CCP-AK-INL-018, Central Characterization Project Acceptable Knowledge Summary Report for Idaho National Laboratory, Lawrence Livermore National Laboratory Waste Streams LL0-M001-S5400, LL-W019-S3900, LL-T004-S3141, Rev. 1, May 26, 2011 [P1166A]

200. AMWTP Form-1900, DOE CH-TRU Waste Profile for SRS SR-W027-235F HOM Inorganic homogeneous solids (SR-255), October 20, 2011 [P1471A]

201. CCP-AK-INL-019, Central Characterization Project Acceptable Knowledge Summary Report for Idaho National Laboratory, General Electric Vallecitos Nuclear Center Hot Cell Debris Waste, Waste Stream: ID-GEVNC-02, Rev. 0, July 15, 2010 [P1167A]

202. AMWTP Form-1900, AMWTP Offsite Waste Stream Profile for SNL-SA-T001-S5400, Lovelace Respiratory Research Institute Heterogeneous Debris Stored at Sandia National Laboratories (SL-223), December 6, 2010 [P1146A]

203. CCP-PK-SNL-001, Central Characterization Project Process Knowledge Summary Report for Lovelace Respiratory Research Institute Contact-Handled Transuranic Waste Stored at Sandia National Laboratories/New Mexico, Waste Stream: SA-T001, Rev. 0, July 22, 2010 [P1147A]

204. CCP-AK-INL-020, Central Characterization Project Acceptable Knowledge Summary Report for Lovelace Respiratory Research Institute Contact-Handled Transuranic Waste Stored at Sandia National Laboratories/New Mexico Shipped to Advanced Mixed Waste Treatment Project, Waste Stream: ID-SDA-T001, Rev. 2, May, 16, 2011 [P1168A]

205. AMWTP Form-1900, AMWTP Offsite Waste Stream Profile for SNL-HFC-S5400, Sandia National Laboratories Hot Cell Facility Heterogeneous Debris (SL-224), December 16, 2010 [P1148A]

206. CCP-PK-SNL-002, Central Characterization Project Process Knowledge Summary Report for Sandia National Laboratories/New Mexico Hot Cell Facility Contact Handled Transuranic Waste (Debris), Waste Streams: SNL-HCF-S5400, Rev. 0, June 3, 2010 [P1149A]

207. CCP-AK-INL-021, Central Characterization Project Acceptable Knowledge Summary Report for Idaho National Laboratory, Sandia National Laboratories/New Mexico Hot Cell Facility Contact Handled Transuranic Waste (Debris), Waste Stream: ID-SNL-HCF-S5400, Rev. 1, May 12, 2011[P1169A]

208. AMWTP Form-1900, AMWTP Offsite Waste Stream Profile for ID-ICP-MFC-Gloves, EFL Lead Gloves (AW-225), March 14, 2011 [P1143A]

209. AMWTP Form-1900, AMWTP Offsite Waste Stream Profile for SNL-SOURCES-S5400, Radioactive Sources from Sandia National Laboratory (SL-227), March 16, 2011 [P1150A]

210. CCP-PK-SNL-003, Central Characterization Project Process Knowledge Summary Report for Sandia National Laboratories/New Mexico TRU Radioactive Sources (Debris), Waste Streams: SNL-SOURCES-S5400, Rev. 0, March 14, 2011 [P1151A]

211. AMWTP Form-1900, DOE CH-TRU Waste Profile for OR-NFS-CH-Soil Lot 1, Nuclear Fuel Services Contact-Handled Transuranic Waste Soil Stored at Oak Ridge National Laboratory (OR-250) December 7, 2008 [P772A]

212. CCP-AK-ORNL-001, Central Characterization Project for Nuclear Fuel Services Contact-Handled Transuranic Waste Stored at Oak Ridge National Laboratory, Waste Streams: OR-NFS-CH-HET and OR-NFS-CH-SOIL, Rev. 3, August 11, 2008 [P771A]

213. AMWTP Form-1900, DOE CH-TRU Waste Profile for SR-AGNS-HOM, Barnwell Solidified Inorganic Waste stored at Savannah River Site (IDC SR-251), August 9, 2010 [P1152A]

214. CCP-AK-SRS-11, Central Characterization Project Acceptable Knowledge Summary Report For Allied-General Nuclear Services Barnwell Nuclear Fuel Plant Transuranic Waste Stored at Savannah River Site, Rev. 1, December 13, 2007 [P923A]

215. AMWTP Form-1900, DOE CH-TRU Waste Profile for SR-W026-221F-HOM, Savannah River Site, Building 221F (SR-252), Rev. 0 December 1, 2010 [P1134S]

216. CCP-AK-SRS-3, Central Characterization Project Acceptable Knowledge Summary Report for Savannah River Site Waste Streams: SR-W026-221F-HET, SR-W026-221F-HOM, SR-W026-221F-HEPA, SR-W026-221F-HET-A, Rev. 9, April 4, 2010 [P1135A]

217. AMWTP Form-1900, AMWTP Offsite Waste Stream Profile for SR-MD-HOM-C, Mound Site Inorganic Particulates Stored at Savannah River Site (SR-253), July 26, 2011 [P1153A]

218. CCP-AK-SRS-8, Central Characterization Project for Mound Site Transuranic Waste Stored at Savannah River Site, Waste Streams: SR-MD-HET, SR-MD-SOIL, SR-MD-HOM-A, SR-MD-HOM-B, AND SR-MD-HOM-C, Rev 6, October 18, 2010 [P777A]

219. AMWTP Form-1900, DOE CH-TRU Waste Profile for SR-MD-HOM-A, Mound Plant Solidified Acid/Caustic Waste Stored at the Savannah River Site (SR-835), March 4, 2009 [P778A]

220. AMWTP Form-1900, AMWTP Offsite Waste Stream Profile for AECHHM-PK, Argonne CH Homogeneous Solids (AE-254), May 11, 2011 [P1154A]

221. CCP-PK-ANLE-001, Central Characterization Project Process Knowledge Summary Report for Argonne Contact-Handled TRU Waste From Facility Maintenance and Laboratory Operations, Waste Streams: AECHDM-PK and AECHHM-PK, Rev. 0, October 10, 2010 [P1155A]

222. RPT-670, CH2M-WG Idaho Process Knowledge Summary Report for CH TRU Waste and Mixed Low-Level Waste Generated at INTEC and RWMC Analytical Laboratories in Support of AMWTP Sampling Activities, Waste Matrix Codes: S5490 and S3900, Rev. 2, January 2010 [P891A, R0]

223. AMWTP Form-1687, Non-AMWTP Generator Waste Profile for IW-LAB-PCB-S5490, Laboratory PCB Debris (IW-526), February 8, 2010 [P1162A]

224. AMWTP Form-1687, Non-AMWTP Generator Waste Profile for IW-LAB-S5490, Laboratory Non-PCB Debris (IW-527), February 8, 2010 [P1163A]

225. AMWTP Form-1687, Non-AMWTP Generator Waste Profile for IW-LAB-S3900, Laboratory Homogeneous Solids (IW-603), February 8, 2010 [P1165A]

226. AMWTP Form-1687, Non-AMWTP Generator Waste Profile for ID-SDA-NO3, SDA Waste Containing Nitrate Salts (SD-703), June 9, 2009 [P1156A]

227. CCP-SO-INL-08-001, CCP Standing Order for ARP VE - Guidance for Roaster Oxides, May 8, 2008 [P1157A]

228. AMWTP Form-1900, AMWTP Offsite Waste Stream Profile for ID-SDA-Sludge, Inorganic and Organic Homogeneous Solids from the Subsurface Disposal Area (SD-704), Rev. 7, July 18, 2011 [P1158A]

229. AMWTP Form-1900, AMWTP Offsite Waste Stream Profile for ID-SDA-Debris, Heterogeneous Debris from the Subsurface Disposal Area (SD-705), Rev. 5, July 18, 2011 [P1159A]

230. AMWTP Form-1900, AMWTP Offsite Waste Stream Profile for ID-SDA-SOIL, Interstitial Soil from the Subsurface Disposal Area (SD-706), Rev. 5, July 28, 2011 [P1160A]

231. AMWTP Form-1687, Non-AMWTP Generator Waste Profile for RLPUNIT, Hanford PFP Absorbed Plutonium Nitrate Solutions RLPUNIT (RL-715), June 10, 2008 [P774A]

232. TB-T-07-004, WMP Training Bulletin, Acceptable Knowledge Documentation Management, Plutonium Finishing Plant (PFP) Absorbed Plutonium Nitrate Solutions Waste Stream RLPUNIT, Rev. 2, April 9, 2008 [P773A]

233. AMWTP Form-1687, Non-AMWTP Generator Waste Profile for KEBASIN01, Hanford Grouted KE Basin North Loadout Pit Sludge (RL-720), August 16, 2007 [P776A]

234. TB-T-05-005, WMP Training Bulletin, Acceptable Knowledge Documentation Management, KE Basin Sludge Waste Stream, Rev. 1, January 19, 2006 [P775A]

235. AMWTP Form-1900, AMWTP Offsite Waste Stream Profile for LA-MIN04-S.001, Los Alamos Salt Waste from TA-55 (LA-005), Rev. 2, Draft [P1224A]

236. AMWTP Form-1900, AMWTP Offsite Waste Stream Profile for NRD.1, Nuclear Radiation Development Mixed Heterogeneous Debris (ND-228), Rev. 0, May 31, 2011 [P1312A]

237. CCP-PK-NRD-001, Central Characterization Project Process Knowledge Summary Report For NRD Mixed Heterogeneous Debris Waste Stream: NRD.1, Rev. 0, February 8, 2011 [P1289A]

238. AMWTP Form-1900, AMWTP Offsite Waste Stream Profile for LBNL-S5400, Lawrence Berkeley Mixed Heterogeneous Debris (LB-229), Rev. 0, May 18, 2011[P1313A]

239. CCP-PK-LBNL-001, Central Characterization Project Process Knowledge Summary Report for Ernest Orlando Lawrence Berkeley National Laboratory Contact-Handled TRU Waste, Waste Stream: LBNL-S5400, Rev. 0, March 30, 2011 [P1290A]

240. AMWTP Form-1900, AMWTP Offsite Waste Stream Profile for SR-MD-SOIL, Mound Site Soil/Debris Stored at SRS (SR-842), Rev. 0, May 19, 2011 [P1314A]

241. 40 CFR Part 268, Land Disposal Restrictions

242. WTS queries of prohibited items identified by RTR and VE examinations, June 30, 2011[U321A]

243. CCP-AK-INL-022, Central Characterization Project Acceptable Knowledge Summary Report for Idaho National Laboratory, Sandia National Laboratories/New Mexico TRU Radioactive Sources (Debris), Waste Streams: ID-SNL-SOURCES-5400, Rev. 0, May 4, 2011 [P1354A]

244. CCP-AK-INL-023, Central Characterization Project Acceptable Knowledge Summary Report for Idaho National Laboratory, NRD Mixed Heterogeneous Debris, Waste Stream: ID-NRD.1, Rev. 0, July 18, 2011 [P1355A]

245. CCP-AK-INL-024, Central Characterization Project Acceptable Knowledge Summary Report for Idaho National Laboratory, Ernest Orlando Lawrence Berkeley national Laboratory Contact-Handled TRU waste, Waste Stream: ID-LBNL-S5400, Rev. 0, June 27, 2011 [P1356A]

246. AMWTP Form-1900, AMWTP Offsite Waste Stream Profile for AECHDM-PK, Argonne CH Debris (AE-230), July 19, 2011 [P1154A]

247. INEL-95/0412, Waste Description Information for Transuranically-Contaminated Wastes Stored at the Idaho National Engineering Laboratory, B. D. Raivo, G. K. Becker, T. H. Smith, and G. L. Anderson, December 1995 [P365A]

248. CCP-AK-SRS-6, Central Characterization Project Acceptable Knowledge Summary Report for Savannah River Site Waste Streams: SR-W027-235F-HET, SR-W027-235F-HOM, SR-W027-235F-HEPA, Rev. 7, September 16, 2010 [P1368A]

249. WM-PD-85-014, Waste Characterization for INEL Remote-Handled/Special-Case Stored Transuranic Wastes, November 1, 1985. [P888A]

250. IPS-2-00-00, AGHCF Operations Manual, Section 11.0, Waste Management, Rev 26, September, 16, 1996. [P1319A]

251. AMWTP Discrepancy Report regarding ANL-E waste identified under content codes AE-110 and AE-120; AE-111 and AE-121. Date XXXX, [D094A]

252. Draft Proposal for: ANL-E Alpha-Gamma Hot Cell Facility Waste Management Plan, 1975. [U314S]

253. ANL-E Radioactive Waste Management Manual, August, 1989. [U320A]

254. WM-F1-81-015, Idaho National Engineering Laboratory Stored Transuranic Waste Characterization: Non-radiological Hazards Identification, T.L. Clements, Jr., September, 1981. [P319A]

255. CCP-AK-INL-025, Rev. 1, Central Characterization Project Acceptable Knowledge Summary Report For Idaho National Laboratory, Argonne Contact-Handled Transuranic Waste from Facility Maintenance and Laboratory Operations, Waste Streams: ID-AECHDM, ID-AECHHM, December 2011. [P1379A]

256. CCP-AK-ANLE-001, Rev. 11, Central Characterization Project Acceptable Knowledge Summary Report for Argonne National Laboratory – East Contact-Handled TRU Waste, Facility Maintenance and Laboratory Operations, December 31, 2003. [P1380A]

257. CCP-AK-ANLE-500, Rev. 9, CCP-AK-ANLE-500 Central Characterization Project Acceptable Knowledge Summary Report For Argonne Remote-Handled Debris Waste, Waste Stream: AERHDM, December 2011. [P1381A]

258. CCP-PK-ANLE-001, Central Characterization Project Process Knowledge Summary Report for Argonne Contact-Handled TRU Waste From Facility Maintenance and Laboratory Operations, Waste Streams: AECHDM-PK and AECHHM-PK, August 10, 2010. [P1155A]

259. CCP-AK-SRS-14, Central Characterization Project; Acceptable Knowledge Summary Report for Savannah River Site; Fuel Fabrication Facility Transuranic Waste; Waste Streams: SR-W027-321-322M-HET; SR-W027-321M-HOM, Rev. 1, February 13, 2012 [P1468A]

260. Pu-DP-2.4, Loading of TRU-Contaminated Waste In DOT 7A Steel Boxes (ANL-M-III). Quality Assurance Document, Rev 1. D. E. Stellrecht, March 9, 1973. [P338A]

261. ANL-E Safety Analysis for Twenty Year Retrievable Storage of Intermediate Gamma Level Transuranic Waste, W. D. Jackson, Rev 0, June 01, 1976 [P1321A]

262. ANL-E AGHCF-SORT, Procedure for Sorting Remote-Handled TRU Waste (30-Gallon Intermediate-Level Waste), Rev 0, January 07, 1987. [P1325A]

263. AMWTP Form-1900, DOE CH-TRU Waste Profile for SR-W027-221H-HOM, SRS Solidified Inorganics from 221H (SR-256), November 7, 2011 [P1469A]

264. RPT-TRUW-79, Acceptable Knowledge Document for Materials and Fuels Complex (MFC) Waste

265. AMWTP Form-1900, DOE CH-TRU Waste Profile for SR-W027-773A-HOM, SRS Solidified Inorganics from 773A (SR-257), April 17, 2012 [P1409S]

266. AMWTP Form-1900, DOE CH-TRU Waste Profile for SR-SDD-HOM-A, SRS Solidified Organics from 211F (SR-258), April 17, 2012 [P1414S]

267. AMWTP Form-1900, DOE CH-TRU Waste Profile for SR-SDD-HOM-B, SRS Solidified Inorganics from 211F (SR-259), April 17, 2012 [P1413S]

268. CCP-AK-SRS-7, Central Characterization Project Acceptable Knowledge Summary Report for Savannah River Site Waste Streams: SR-W027-773A-HET, SR-W027-773A-HOM, Rev. 5, August 12, 2011 [P1415A]

269. CCP-AK-SR7-13, Central Characterization Project Acceptable Knowledge Summary Report for Savannah River Site, Site Deactivation and Decommissioning Waste, Waste Streams: SR-SDD-HOM-A, SR-SDD-HOM-B, SR-SDD-HET-A, Rev. 1, February 23, 2012 [P1416A]

270. RPT-TRUW-89, Acceptable Knowledge Document for Argonne National Laboratory – East (ANL-E) Waste

271. Renewal Application for Combined Special Nuclear Material and Byproduct License. Section 2, Plutonium Laboratory, September 1, 1977 [P351A]

272. RPT-TRUW-93, Acceptable Knowledge Document for Los Alamos National Laboratory Debris Waste

273. RPT-TRUW-92, Acceptable Knowledge Document for Select Idaho National Laboratory (INL) Facilities

274. E-mail from Mike Romero to Rand Watson, Waste Packaging description of LANL CMBs, September 25, 2013. [C1330A]

275. DOE/LLW-217, DOE Waste Treatability Group Guidance, January, 1995 [P670A]

276. AMWTP Form-1900, DOE CH-TRU Waste Profile for SRS SR-W027-321M-HOM Solidified Organics from 321M (SR-260), May 24, 2012 [P1470A]

277. AMWTP Form-1900, AMWTP Offsite Waste Profile for SR-BCLDP.003.001 CH Hudraulic Sludge and Debris (SR-261), August 22, 2012 [P1464A]

278. CCP-AK-SRS-530, Central Characterization Project; Acceptable Knowledge Summary Report for Battelle Columbus Laboratories Decommissioning Project (BCLDP); Homogeneous Transuranic Waste from the Building JN-1 Hydraulic Room; Waste Stream: SR-BCLDP.003-Hydraulic Sludge and Debris; SR-BCLDP.003.001 – CH Hydraulic Sludge and Debris, Rev. 3, February 2012 [P1467A]

279. WDDF Number RWMC13006, Waste Determination & Disposition FORM (WDDF) for Rocky Flats Inorganic Sludge (BNINW216 and BNINW218), October 14, 2013 [P2033A]

280. CCP-AK-INL-026, Central Characterization Project Acceptable Knowledge Summary Report for INL Sludge Repackage Project Combined Sludge Waste, Waste Stream ID-SRP-S3000, Rev. 0, November 18, 2013 [P2034A]

281. AMWTP Form-1900, AMWTP Offsite Waste Profile for LA-MHD01.001 Mixed Heterogeneous Debris from TA-55 (LA-007), Rev. 1, Draft [P1998A]

282. CCP-AK-LANL-009, Central Characterization Project Acceptable Knowledge Summary Report for Los Alamos National Laboratory Chemistry and Metallurgy Research (CMR) Facility, Waste Streams: LA-MHD03.001, LA-CIN03.001, Rev. 7, February 7, 2012 [P1840A]

283. AMWTP Form-1900, AMWTP Offsite Waste Profile for LA-MHD03.001 Mixed Heterogeneous Debris from TA-3, CMR Facility (LA-008), Rev. 1, Draft [P2055A]

284. AMWTP Form-1900, AMWTP Offsite Waste Profile for LA-MHD04.001 Mixed Heterogeneous Debris from TA-21 (DP West Facility) (LA-009), Rev. 1, Draft [P1999A]

285. AMWTP Form-1900, AMWTP Offsite Waste Profile for LA-MHD09.001 Mixed Heterogeneous Debris from TA-50 Facility (LA-010), Rev. 2, Draft [P2001A]

286. RPT-TRUW-91, Acceptable Knowledge Document for Pre-1980 INL-Exhumed SDA Waste

6.0 RECORDS

Record Description	Classification
RPT-TRUW-05, Case file	Misc. Record/A16-1.2/Destroy 5 years after submittal or being superseded.

RECORD
C1334A
~~B-2013-0426~~
NKIRK
12/18/13

AK15

AMWTP Advanced Mixed Waste Treatment Project

AK Source Document Review Summary

Form-1068, Rev. 4
Effective: 01/08/09

Implementing Document: MP-TRUW-8.13

1. Source Document Tracking Number: C1334A	2. Revision: 0

3. Category

- ☐ Published Documentation
- ☐ Unpublished Documentation
- ☑ Correspondence
- ☐ Discrepancy

4. Title/Description Information: Waste material parameter evaluation for inclusion of LANL debris into the BN510.3 Supercompacted Debris Waste Stream – TV-012-13

Document Number: TV-012-13
Revision: N/A
Author: Tim Venneman
Date: 12/02/2013

5. AK Element	6. Generator Or Waste Type(s)	7. Location in Source Doc.	8. AK Information Summary:
WS5	BN-550	All	Waste material parameter evaluation for inclusion of LANL debris into the BN510.3 Supercompacted Debris Waste Stream

9. Document Summary:

The document provides an evaluation of the BN510.3 WMPs after the inclusion of LANL debris waste. Due to the small volume increase from LANL debris waste no change in BN510.3 WMPs are expected.

10. Source Document Data Limitations (if any):

None identified at this time.

11. AK Expert:	Joe Velasquez	[signature]	12/11/2013
	Print	Sign	Date

Idaho Treatment Group

Idaho Treatment Group, LLC • 850 Energy Drive, Suite 100 • Idaho Falls, ID 83401-1502 • t: 1.208.557.7301 • f: 1.208.557.0963

To: File

From: Tim Venneman, Acceptable Knowledge Expert

Date: December 2, 2013

Re: Waste Material Parameter Evaluation for Inclusion of Los Alamos National Laboratory Debris into the BN510.3 Supercompacted Debris Waste Stream – TV-012-13

The following waste material parameter evaluation is based off of the estimated volume of Los Alamos National Laboratory (LANL) debris waste projected to be included into the AMWTP supercompactor feedstock (i.e., BN510.3).[1]

The LANL waste will be processed through the Advanced Mixed Waste Treatment Project (AMWTP) WMF-676 supercompactor box line areas. The box line operations will initially repackage the LANL debris waste and produce 55-gallon drums for subsequent compaction. The compacted waste (i.e., pucks) will be repackaged into 100-gallon product drums for shipment to WIPP.

The AMWTP off-site waste profile forms for LANL waste identifies the overall estimated LANL waste volume for three of the four LANL waste streams (i.e., IDCs LA-007, LA-009 and LA-010) at 48m^3 resulting in a final compacted waste volume increase for the BN510.3 WSPF of 25, 100-gallon product drums (approximately 9 m3). (1, 2, 3, 4)

Due to the small volume of debris waste expected to be included into the supercompactor feedstock there is no anticipated change in the BN510.3 waste material parameters.

References:

1. RPT-TRUW-83, Acceptable Knowledge Summary for Supercompacted Debris Waste
2. Form 1900, AMWTP offsite Waste Profile Form for LANL LA-MHD04.001, AMWTP, September 12, 2013. [P1999A]
3. Form 1900, AMWTP offsite Waste Profile Form for LANL LA-MHD09.001, September 12, 2013. P2001A]
4. Form 1900, AMWTP offsite Waste Profile Form for LANL LA-MHD01.001, AMWTP, September 12, 2013. [P1998A].

cc: George Byram
Steve Carpenter
Julie Collins
Caralea Hinkle-Daniel
Randy Morris
Eric Schweinsberg
Gina Tedford
Joe Velasquez
Tim Venneman
AMWTP Correspondence Control

[1] See C1323A rev 1 for the estimated waste volume associated with LANL debris waste.

DIVIDER

PAGE

B-2013-0402
RECORD
JCOLLINS
10/03/2013

AMWTP Advanced Mixed Waste Treatment Project

AK Source Document Review Summary

Form-1068, Rev. 4
Effective: 01/08/09
Page 1 of 1

Implementing Document: MP-TRUW-8.13

1. Source Document Tracking Number: C1325A	2. Revision: 0

3. **Category**

- ☐ Published Documentation
- ☐ Unpublished Documentation
- ☑ Correspondence
- ☐ Discrepancy

4. **Title/Description Information:** WMPs for BN510.3

Document Number: TV-009-13
Revision: N/A
Author: AMWTP
Date: 09/30/2011

5. AK Element	6. Generator Or Waste Type(s)	7. Location in Source Doc.	8. AK Information Summary:
WM5	BN	All	BN510 WMPs as of 9/9/2013
WS1, WS4	BN-550	All	BN510 WMPs as of 9/9/2013

9. **Document Summary:**

This document identifies the estimated waste material parameters (WMPs) for the supercompactor waste stream as of 9/9/2013. The document includes the addition of MFC debris waste into the supercompactor. The WMPs are based off of BN510.1 information. The WMPs for BN510.1 and BN510.3 are projected to be similar. Currently no MFC feedstock drums have been run through the supercompactor, but the query was run in order to support the upcoming WIPP recert audit.

10. **Source Document Data Limitations (if any):**

WMPs estimates may change in the future.

11. AK Expert:	Julie Collins	Julie Collins	10/3/2013
	Print	Sign	Date

Idaho Treatment Group

Idaho Treatment Group, LLC • 850 Energy Drive, Suite 100 • Idaho Falls, ID 83401-1502 • t: 1.208.557.7301 • f: 1.208.557.0963

To: File

From: Tim Venneman, Acceptable Knowledge Expert

Date: September 30, 2013

Re: Waste Material Parameter Weight per Unit of Waste Calculations for the BN510.3 Supercompacted Debris Waste Stream – TV-009-13

The following provides the BN510.3 estimated waste material parameters (WMPs) results as of September 9, 2013. The WMPs for BN510.3 is based off of RTR/VE information generated as IDC BN-550 as of 9/9/2013. The WMPs for prior waste identified as BN-550 are not expected to be significantly different as a result of processing SDA debris waste through the supercompactor (i.e., BN510.3). A summary of the WMP results is provided in Attachment 1.

1. A query of the Waste Tracking System (WTS) was performed to collect the following information for each 100-gallon drum of supercompacted debris waste [item description code (IDC) BN-550] with RTR/VE data:
    a. Container number
    b. Status
    c. Container Type
    d. Pack date
    e. Percent Fill
    f. Current IDC
    g. Gross weight of waste drum (lbs)
    h. Net weight of waste drum (lbs)
    i. Weight of each material parameter (lbs)
        i. Iron-based metals/alloys
        ii. Aluminum-based metals/alloys
        iii. Other Metals
        iv. Cellulosics
        v. Rubber
        vi. Plastics (waste materials)
        vii. Organic matrix
        viii. Inorganic matrix
        ix. Soils/gravel
    j. VE Date
    k. WISS/WDS status

2. The total weight of each WMP for all drums examined with valid data was calculated (w_X) in the waste stream based on summing the RTR/VE data from the WTS query.
    w_X = weight (lbs)
    Where $X = i, ii, iii, iv, v, vi, vii, viii, ix$ = waste material parameter (i through ix in step 1)

3. The total net weight (N_T) for the waste stream waste was calculated based on the following equation.

   $N_T = w_i + w_{ii} + w_{iii} + w_{iv} + w_v + w_{vi} + w_{vii} + w_{viii} + w_{ix}$

4. The weight % (or pound per unit waste) was calculated for each WMP (P_X) based on the following equation.

   $P_X = w_X/N_T$

   Where $X = i, ii, iii, iv, v, vi, vii, viii, ix$ = waste material parameter (i through ix in step 1)

Attachment

1. Estimated Waste Material Parameter Weights per Unit of Waste for Waste Stream BN510.3 Supercompacted Debris

TV/at

cc: George Byram
Steve Carpenter
Julie Collins
Caralea Hinkle-Daniel
Randy Morris
Eric Schweinsberg
Tim Venneman
Joe Velasquez
AMWTP Correspondence Control

Estimated Waste Material Parameter Weights per Unit of Waste for Waste Stream BN510.3 Supercompacted Debris

WMP Weight per unit of waste	Iron Based Metals	Aluminum Based Metals	Other Metals	Other Inorganic Materials	Cellulosics	Rubber	Plastic Waste	Inorganic Matrix	Organic Matrix	Soils and Gravel
IDC BN-550	4.87E+06	1.69E+04	3.82E+04	1.29E+05	9.92E+05	4.06E+04	4.79E+05	1.14E+02	2.89E+01	1.04E+03
WMP Weight %*	74%	<1%	1%	2%	15%	1%	7%	<1%	<1%	<1%

IDC Description	IDC	Est. # of Drums in Waste Stream BN510.3	# of 100-gal Drums Examined prior to 9/9/13	% Examined prior to 9/9/13
Supercompacted Debris	BN-550	9000	9136*	57%*

Data for period :	7/02/10-9/9/13
Average Fill Factor:	52%*
Average Net Wt (pounds):	718*

* The value is based off of the total number of drums identified as BN-550 as of 9/9/13

DIVIDER

PAGE

AMWTP Advanced Mixed Waste Treatment Project	**AK Source Document Review Summary**	AMWTP Form 1068, Rev. 2 Effective Date: 02/07/06 MP-TRUW-8.13 Page 1 of 2

T-2382 RECORD CB 4-23-07

Reference Number: C534A Rev. 5

(Please delete all previous records and replace with the information below. Also ensure the CD is available within records.

AK Type:

- ☐ **Published Documentation**
- ☐ **Unpublished Data**
- ☒ **Correspondence**
- ☐ **Discrepancy Report**

Disk in Special Process Storage in EDF Vault

Title of Source Document (including author(s), document and revision number, date, etc.): Memorandum to File "Waste Material Parameter (WMP) Weight Calculations and Supporting Data to Determine WMP Weight per Unit of Waste", Tim Venneman, January 19, 2007

Information Source:
Interoffice Memorandum to File

AK # [a]	AK Information Summary
WS2, WS5 AMWTP RF-004 RF-802 RF-371 RF-371 RF-377 RF-328 RF-335 RF-338 RF-360 RF-376 RF-490 RF-001 RF-002 RF-800 RF-007 RF-803 RF-807 RF-440 RF-339 RF-463 RF-320 RF-321 RF-480 RF-481 MD-801	The attached memorandum (January 19, 2007) outlines the method of calculating the estimated WMP weights per unit of waste. No changes were made to the previously issued memorandum during this revision. The CD referenced in the January 19, 2007 memorandum was updated for this revision to support TWBR development.

1/17

MD-802 MD-803 MD-804 MD-805 MD-810 MD-813 MD-814 MD-825 MD-827 MD-848 MD-834 MD-835 MD-836 BN-510

Source Document Data Limitations (if any):
The calculations and estimates are not exact and could be subject to change as containers are retrieved (e.g., if unexpected WMPs are noted in significant quantities over time).

AK Expert:

Tim Venneman / **Date:** 3/14/07

Print **Sign**

[a] **Obtain from Acceptable Knowledge Documentation Checklists (AMWTP Form-1066/AMWTP Form-1067)**

2/17

INTEROFFICE MEMORANDUM

Date: **January 19, 2007**

To: **File**

From: **Tim Venneman**
Acceptable Knowledge Expert

Subject: **Waste Material Parameter (WMP) Weight Calculations And Supporting Data To Determine WMP Weight Per Unit of Waste - TV-001-07**

Based on the 311 Permit Modification Request (PMR) Waste Analysis Plan (WAP) revision it is necessary to revise the Advanced Mixed Waste Project (AMWTP) waste stream profile (WSP) packages for certified waste streams to include additional information on waste material parameters(WMPs). Documentation of this information is as follows:

- The WMP weights are to be reported as weight of each parameter identified in the Waste Isolation Pilot Plant (WIPP) WAP Table B3-1 (lbs) per unit of waste weight (lbs), which can also be reported as fraction or percent by weight.
- The method used to calculate or estimate the WMP weights per unit of waste is to be included in the AMWTP procedure and in the characterization information summary (CIS) part of the WSP package.
- The WMP weights per unit of waste are to be reported in the waste stream profile form (WSPF) as part of the WSP package.
- The WMP weights by percentage of the material in the waste are reported in the acceptable knowledge (AK) summary part of the WSP package.

The following method outlines the approach determining WMP weight estimates and is to be used as the basis for the calculations for all waste streams. Where multiple item description codes (IDCs) are identified within the WSPF, the method remains essentially the same, with the exception that the WMP weights are calculated using a weighted average (by IDC).

1. Perform a Waste Tracking System (WTS) query for the following information for each IDC in the waste stream:
    a) Whether or not < or > LLD
    b) Gross weight of waste drum (lbs)
    c) Net weight of the waste (lbs)
    d) Weight of each material parameter (lbs)

3/17

i. Iron based metals/alloys
ii. Aluminum based metals/alloys
iii. Other metal
iv. Cellulosic waste
v. Rubber waste
vi. Plastic waste
vii. Inorganic matrix
viii. Organic matrix
ix. Soil/gravel

2. Determine the total number of container for each IDC in the waste stream from Memorandum to File, Estimated Number of Drums for the WIPP Approved Direct Ship Waste Streams (C535A).
3. Determine the total number of containers examined to date for each IDC in the waste stream from the WTS query [note: the total container count is based off of only those containers with completed (finalized) sets of weights for each WMP (identified above in i through ix)].
4. Sum the net waste weights for all drums examined to date for each IDC.
5. Estimate the total net weight of the waste.
6. For the total number of container in the waste stream identified in step 2 based on the total net weight of the waste in the containers examined to date.

$W_w = N_w/N_e \times W_{ex}$
N = number of drums
W=net weight
Subscripts:
w = waste stream
ex = examined

NOTE: For waste streams with multiple IDCs, calculate the net waste weight and the WMP weights for each IDC separately, and sum them for a weighted average.

7. Sum the weight of each material parameter for the drums examined to date for each IDC.
8. Estimate the total weight of each material parameter for the total number of containers in the waste stream identified in step 2 based on the weight of the waste material parameters in the containers examined to date.

4/17

$M_w = N_w/N_e \times M_{ex}$
N = number of drums
M = material parameter weight
Subscripts:
w = waste stream
ex = examined

9. Calculate the WMP weight per unit of waste.
   a) WMP lb/waste lb = M_w/W_w

Also attached are the WMP summary sheets for approved WSPFs as of the date of this memorandum. A compact disc (CD) with the raw data, summaries, and percentage of drums examined are included as an attachment to this AK source document to complete the AK record for WMPs weights per unit of waste.

References:
AMWTP-MP-TRUW-8.13
AMWTP-MP-TRUW-8.14
AMWTP-RPT-TRUW-56, August 3, 2006. (P649A)

TV:at

cc: Carolyn Abbott
Steve Carpenter
AMWTP Correspondence Control

5/17

Estimated Waste Material Parameter Weights per Unit Waste (lb/lb) for BN004 Special Setups Waste

	# OF DRUMS	IRON BASED METALS	ALUMINUM BASED METALS	OTHER METALS	OTHER INORGANIC MATERIALS	CELLU-LOSICS	RUBBER	PLASTIC WASTE	INORGANIC MATRIX	ORGANIC MATRIX	SOILS GRAVEL
All drums with WTS data	1041	1.56E-04	1.93E-06	7.43E-05	4.07E-03	3.78E-05	2.42E-05	4.94E-04	9.95E-01	0.00E+00	0.00E+00
Weighted average using % drums of each IDC and weight of WMPs for each IDC	2108	1.63E-04	2.02E-06	7.69E-05	4.25E-03	3.95E-05	2.53E-05	5.00E-04	9.95E-01	0.00E+00	0.00E+00
Normalized Precentages		<1%	<1%	<1%	<1%	<1%	<1%	<1%	99%	0%	0%
Density for TWBIR, kg/m^3 (based on normalized lb/lb values)		0	0	0	5	0	0	1	1300	0	0

Comparison with AK Summary CPR Table	Ferrous Metal	Non-Ferrous Metal	CPR	Other (e.g., solidified liquids, cement, etc.)	TOTAL
Metals and CPR based on weighted average	0.0%	0.0%	0.1%	99.9%	100.0%
AK Summary, Rev. 0	1%	1%	1%	97%	100%

	IDC	Est. # of Drums (C535A)	# of Drums Examined	% Examined.
Special Setups	RF-004	2029	964	48%
Solidified Laboratory Waste	RF-802	79	77	97%
		2108	1041	49%

RFP Dates of Generation for Examined Containers:	1972-1988

Average Fill Factor:	85%
Average Net Wt (pounds):	494

6/17

Values based on WTS query performed on 10/11/06

Updated 3/12/07

Estimated Waste Material Parameter Weights per Unit Waste (lb/lb) for BN161 Firebrick Debris Waste

	# OF DRUMS	IRON BASED METALS	ALUMINUM BASED METALS	OTHER METALS	OTHER INORGANIC MATERIALS	CELLU-LOSICS	RUBBER	PLASTIC WASTE	INORGANIC MATRIX	ORGANIC MATRIX	SOILS GRAVEL
All drums with WTS data	183	2.40E-03	0.00E+00	3.51E-04	9.36E-01	4.88E-02	2.34E-05	1.16E-02	0.00E+00	0.00E+00	0.00E+00
Weighted average using % drums of each IDC and weight of WMPs for each IDC	2022	2.40E-03	0.00E+00	3.51E-04	9.36E-01	4.88E-02	2.34E-05	1.16E-02	0.00E+00	0.00E+00	0.00E+00
Normalized Precentages		<1%	<1%*	<1%	94%	5%	<1%	1%	0%	0%	0%

* Aluminum (as a component of filter media) was identified in individual drums in this waste stream based on AK (P368A).

Density for TWBIR, kg/m^3 (based on normalized lb/lb values)		1	0	0	540	28	0	7	0	0	0

Comparison with AK Summary CPR Table	Ferrous Metal	Non-Ferrous Metal	CPR	Other (e.g., firebrick)	TOTAL
Metals and CPR based on weighted average	0.2%	0.0%	6.0%	93.6%	99.9%
AK Summary, Rev. 0	<1%	<1%	10%	88%	98%

	IDC	Est. # of Drums (C535A)	# of Drums Examined	% Examined.
Firebrick	RF-371	2019	183	9%
Coarse Firebrick	RF-377	3	0	0%
		2022	183	9%

RFP Dates of Generation for Examined Containers:	1972-1987

Average Fill Factor:	71%
Average Net Wt (pounds):	186

Values based on WTS query performed on 10/11/06.

Updated 3/12/07

Estimated Waste Material Parameter Weights per Unit Waste (lb/lb) for BN211 Filter Debris Waste

WMP weight per unit of waste	# OF DRUMS	IRON BASED METALS	ALUMINUM BASED METALS	OTHER METALS	OTHER INORGANIC MATERIALS	CELLU-LOSICS	RUBBER	PLASTIC WASTE	INORGANIC MATRIX	ORGANIC MATRIX	SOILS GRAVEL
All drums with WTS data	1500	2.12E-03	1.60E-02	2.33E-03	7.05E-01	2.37E-01	2.13E-04	3.65E-02	0.00E+00	0.00E+00	0.00E+00
Weighted average using % drums of each IDC and weight of WMPs for each IDC	2461	8.93E-03	1.39E-02	2.15E-03	7.39E-01	2.09E-01	3.47E-04	2.64E-02	0.00E+00	0.00E+00	0.00E+00
Normalized Precentages		1%	1%	<1%	74%	21%	<1%	3%	0%	0%	0%
Density for TWBIR, kg/m^3 (based on normalized lb/lb values)		3	4	1	210	59	0	7	0	0	0

Comparison with AK Summary CPR Table	Ferrous Metal	Non-Ferrous Metal	CPR	Other (e.g., glass fiber)	Total	Total for waste form (filters and insulation)	comment
Metals and CPR based on weighted average	0.9%	1.6%	23.5%	73.9%	100.0%	94.8%	Assumes all cellulosics waste identified is filter or insulation waste and none was other debris items (e.g., rags, coveralls, cardboard, etc.). Amount of filters versus insulation cannot be determined by WMP weights
AK Summary, Rev. 1	1%	4%	34%	61%	100%	N/A	

	IDC	Est. # of Drums (C535A)	# of Drums Examined	% Examined
Ful-Flo Incinerator Filters	RF-328	8	8	100%
Absolute 8 x 8 Filters	RF-335	153	62	41%
Insulation and CWS Filter Media	RF-338	284	184	65%
Insulation	RF-360	486	1	0%
Cemented Insulation and Filter Media	RF-376	1416	1230	87%
HEPA Filters and CWS Filters	RF-490	114	15	13%
		2461	1500	61%

RFP Dates of Generation for Examined Containers:	1972-1988

Average Fill Factor:	81%
Average Net Wt (pounds):	105

1/8

Values based on WTS query performed on 10/11/06

Updated 3/12/07

Estimated Waste Material Parameter Weights per Unit Waste (lb/lb) BN243 Glass Debris Waste

WMP weight per unit of waste	# OF DRUMS	IRON BASED METALS	ALUMINUM BASED METALS	OTHER METALS	OTHER INORGANIC MATERIALS	CELLU-LOSICS	RUBBER	PLASTIC WASTE	INORGANIC MATRIX	ORGANIC MATRIX	SOILS GRAVEL
All drums with WTS data	485	6.89E-03	0.00E+00	5.79E-02	8.40E-01	3.33E-03	1.34E-03	9.06E-02	0.00E+00	0.00E+00	0.00E+00
Weighted average using % drums of each IDC and weight of WMPs for each IDC	1612	6.89E-03	0.00E+00	5.79E-02	8.40E-01	3.33E-03	1.34E-03	9.06E-02	0.00E+00	0.00E+00	0.00E+00
Normalized Precentages		1%	<1%*	6%	84%	<1%	<1%	9%	0%	0%	0%

* Aluminum (as a component of light bulbs) was identified in individual drums in this waste stream based on AK (P368A).

Density for TWBIR, kg/m^3 (based on normalized lb/lb values)		2	0	20	290	1	0	32	0	0	0

Comparison with AK Summary CPR Table	Ferrous Metal	Non-Ferrous Metal	CPR	Other (e.g., glass)	TOTAL
Metals and CPR based on weighted average	0.7%	5.8%	9.5%	84.0%	100.0%
AK Summary, Rev. 2	2%	3%	11%	84%	100%

	IDC	Est. # of Drums (C535A)	# of Drums Examined	% Examined.
Glass	RF-440	1612	485	30%

RFP Dates of Generation for Examined Containers:	1971-1985

Average Fill Factor:	84%
Average Net Wt (pounds):	134

Values based on WTS query performed on 10/11/06.

Updated 3/12/07

Estimated Waste Material Parameter Weights per Unit Waste (lb/lb) for BN252 Leaded Rubber Debris Waste

WMP weight per unit of waste	# OF DRUMS	IRON BASED METALS	ALUMINUM BASED METALS	OTHER METALS	OTHER INORGANIC MATERIALS	CELLU-LOSICS	RUBBER	PLASTIC WASTE	INORGANIC MATRIX	ORGANIC MATRIX	SOILS GRAVEL
All drums with WTS data (only IDC 339 examined to date)	451	3.10E-04	0.00E+00	1.13E-01	9.24E-03	3.89E-04	8.74E-01	3.81E-03	0.00E+00	0.00E+00	0.00E+00
Weighted average using % drums of each IDC and weight of WMPs for each IDC	1134	3.10E-04	0.00E+00	1.13E-01	9.24E-03	3.89E-04	8.74E-01	3.81E-03	0.00E+00	0.00E+00	0.00E+00

May be 'biased' because confirmatory data prior to rev. 3 of RPT-05 directed RTR to assume 50% lead and 50% rubber for leaded rubber gloves. Current direction is to assume 100% rubber for leaded rubber gloves.

Normalized Precentages		<1%	0%	11%	1%	<1%	87%	<1%	0%	0%	0%

Density for TWBIR, kg/m^3 (based on normalized lb/lb values)		0	0	89	7	0	690	3	0	0	0

Comparison with AK Summary CPR Table	Ferrous Metal	Non-Ferrous Metal	CPR	Other (e.g., glass, absorbents)	Total	Total for waste form (rubber)
Metals and CPR based on WTS data	<0.1%	11.3%	87.8%	<0.1%	99.0%	87.4%
AK Summary, Rev. 2	<1%	<1%	88%	10%	98%	n/a

	IDC	Est. # of Drums (C535A)	# of Drums Examined	% examined
Leaded Rubber Gloves and Aprons	RF-339	1030	451	44%
Leaded Rubber Gloves and Aprons	RF-463	107	0	0%
		1137	451	40%

RFP Dates of Generation for Examined Containers:	1973-1988

Average Fill Factor:	71%
Average Net Wt (pounds):	256

Values based on WTS query performed on 10/11/06

Updated 3/12/07

Estimated Waste Material Parameter Weights per Unit Waste (lb/lb) for BN296 Non-Special Source Metal

WMP weight per unit of waste	# OF DRUMS	IRON BASED METALS	ALUMINUM BASED METALS	OTHER METALS	OTHER INORGANIC MATERIALS	CELLU-LOSICS	RUBBER	PLASTIC WASTE	INORGANIC MATRIX	ORGANIC MATRIX	SOILS GRAVEL
All drums with WTS data	2001	3.94E-01	2.44E-03	5.63E-01	1.63E-02	1.24E-02	3.46E-03	7.82E-03	1.02E-05	6.70E-06	0.00E+00
Weighted average using % drums of each IDC and weight of WMPs for each IDC	4741	4.02E-01	2.62E-03	5.50E-01	1.79E-02	1.25E-02	4.39E-03	9.29E-03	1.33E-05	1.01E-05	0.00E+00

May be 'biased' because confirmatory data prior to rev. 5 of RPT-05 directed RTR to assume 'Other metal' when type of metal could not be identified by RTR.

Normalized Precentages		40%	<1%	55%	2%	1%	<1%	1%	<1%	<1%	0%

Density for TWBIR, kg/m^3 (based on normalized lb/lb values)		190	1	260	8	6	2	4	0	0	0

Comparison with AK Summary CPR Table	Ferrous Metal	Non-Ferrous Metal	CPR	Other (e.g., glass, absorbents)	Total	Total for waste form (metals)
Metals and CPR based on weighted average	40.2%	55.3%	2.6%	1.8%	99.9%	95.5%
AK Summary, Rev. 1	57%	32%	6%	5%	100%	89%

	IDC	Est. # of Drums (C535A)	# of Drums Examined	% examined
Heavy Non-special Source Metal	RF-320	734	413	56%
Lead	RF-321	4	4	100%
Non-special Source Metal	RF-480	3157	929	29%
Leached Non-special Source Metal	RF-481	846	655	77%
		4741	2001	42%

RFP Dates of Generation for Examined Containers:	1971-1988

Average Fill Factor:	77%
Average Net Wt (pounds):	164

Values based on WTS query performed on 10-12-06

Updated 3/12/07

Estimated Waste Material Parameter Weights per Unit Waste (lb/lb) for BN304 Mound Debris Waste

WMP weight per unit of waste	# OF DRUMS	IRON BASED METALS	ALUMINUM BASED METALS	OTHER METALS	OTHER INORGANIC MATERIALS	CELLU-LOSICS	RUBBER	PLASTIC WASTE	INORGANIC MATRIX	ORGANIC MATRIX	SOILS GRAVEL
All drums with WTS data	822	0.309	0.00E+00	2.30E-01	3.80E-01	1.20E-02	4.78E-03	6.15E-02	0.00E+00	0.00E+00	2.61E-03
Weighted average using % drums of each IDC and weight of WMPs for each IDC	977	0.283	1.12E-03	3.45E-01	1.48E-01	5.56E-02	8.36E-02	8.37E-02	2.23E-04	0.00E+00	1.45E-03
Normalized Precentages		28%	<1%	34%	15%	6%	8%	8%	<1%	0%	<1%
Density for TWBIR, kg/m^3 (based on normalized lb/lb values)		77	0	95	40	15	23	23	0	0	0

Comparison with AK Summary CPR Table	Ferrous Metal	Non-Ferrous Metal	CPR	Other (e.g., glass, absorbent)	TOTAL
Metals and CPR based on weighted average	28.3%	34.6%	22.3%	14.9%	100.1%
AK Summary, Rev. 0	30%	20%	32%	18%	100%

	IDC	Est. # of Drums (C535A)	# of Drums Examined	% Examined.
Rags, Paper, Wood	MD-801	35	31	89%
Dry Box Gloves and O-rings	MD-802	120	118	98%
Metal Equipment, Pipe, Valves, Etc.	MD-803	182	173	95%
Plastic, Tygon, Mani-Boots, Etc.	MD-804	221	213	96%
Asbestos Filters	MD-805	38	39	103%
Glass, Flasks, Sample Vials, Etc.	MD-810	12	13	108%
Glass Filters and Fiberglass	MD-813	3	2	67%
Graphite Waste	MD-814	2	2	100%
Equipment Drums, Non-combustible	MD-825	225	205	91%
Equipment Drums, Combustible	MD-827	5	8	160%
LSA<100 nCi/g Non-combustible	MD-848	134	18	13%
		977	822	84%

Mound Dates of Generation for Examined Containers:	1974-1985

Average Fill Factor:	62%
Average Net Wt (pounds):	78

12/12

Values based on WTS query performed on 10/11/06.

Updated 3/12/07

Estimated Waste Material Parameter Weights per Unit Waste (lb/lb) for BN510 Supercompacted Debris

WMP weight per unit of waste	# OF DRUMS	IRON BASED METALS	ALUMINUM BASED METALS	OTHER METALS	OTHER INORGANIC MATERIALS	CELLU-LOSICS	RUBBER	PLASTIC WASTE	INORGANIC MATRIX	ORGANIC MATRIX	SOILS GRAVEL
All drums with WTS data	5963	4.51E-01	4.25E-03	5.77E-03	2.02E-02	2.35E-01	6.70E-03	2.77E-01	4.55E-05	9.35E-06	2.41E-05
Normalized Precentages		45%	<1%	1%	2%	24%	1%	28%	<1%	<1%	<1%
Density for TWBIR, kg/m^3 (based on normalized lb/lb values)		1000	9	13	45	520	15	610	0	0	0

Comparison with AK Summary CPR Table	Ferrous Metal	Non-Ferrous Metal	CPR	Other debris (e.g., glass)	TOTAL
Metals and CPR based on weighted average	45.1%	1.0%	51.9%	2.0%	100.0%
AK Summary, Rev. 2	26.2%	10.4%	34.5%	28.9%	100.0%

	IDC	Drums in WSPF	Drums Examined	% Examined
Supercompacted Debris	BN-510	30,740	5963	19%

Average Fill Factor:	53%
Average Net Wt (pounds):	539

12/17

Values based on WTS query performed on 10/11/06.

Updated 3/12/07

Estimated Waste Material Parameter Weights per Unit Waste (lb/lb) for BN835 Solidified Acid/Caustic Waste

WMP weight per unit of waste	# OF DRUMS	IRON BASED METALS	ALUMINUM BASED METALS	OTHER METALS	OTHER INORGANIC MATERIALS	CELLU-LOSICS	RUBBER	PLASTIC WASTE	INORGANIC MATRIX	ORGANIC MATRIX	SOILS GRAVEL
All drums with WTS data	2229	1.34E-04	1.61E-06	0.00E+00	2.61E-04	2.65E-02	5.62E-05	1.34E-03	9.72E-01	0.00E+00	0.00E+00
Weighted average using % drums of each IDC and weight of WMPs for each IDC	2576	1.38E-04	1.57E-06	0.00E+00	2.80E-04	2.68E-02	5.84E-05	1.42E-03	9.93E-01	0.00E+00	0.00E+00
Normalized Precentages		<1%	<1%	0%	<1%	3%	<1%	<1%	97%	0%	0%
Density for TWBIR, kg/m^3 (based on normalized lb/lb values)		0	0	0	0	19	0	1	710	0	0

Comparison with AK Summary CPR Table	Ferrous Metal	Non-Ferrous Metal	CPR	Other (e.g., inorganic matrix)	TOTAL
Metals and CPR based on weighted average	0.0%	0.0%	2.8%	99.3%	102.2%
AK Summary, Rev. 1	CPR and Metals content was not presented in AK summary.				

	IDC	Est. # of Drums (C535A)	# of Drums Examined	% Examined
High Level Acid	MD-834	901	705	78%
High Level Caustic	MD-835	1675	1524	91%
		2576	2229	87%

Mound Dates of Generation for Examined Containers:	1974-1985

Average Fill Factor:	71%
Average Net Wt (pounds):	239

12/17

Values based on WTS query performed on 10/11/06.

Updated 3/12/07

Estimated Waste Material Parameter Weights per Unit Waste (lb/lb) for BN836 High Level Sludge/Cement

WMP weight per unit of waste	# OF DRUMS	IRON BASED METALS	ALUMINUM BASED METALS	OTHER METALS	OTHER INORGANIC MATERIALS	CELLU-LOSICS	RUBBER	PLASTIC WASTE	INORGANIC MATRIX	ORGANIC MATRIX	SOILS GRAVEL
All drums with WTS data	1	1.1E-05	0.0E+00	2.2E-05	4.9E-04	3.1E-04	1.0E-05	1.1E-04	0.999	0.0E+00	0.0E+00
Weighted average using % drums of each IDC and weight of WMPs for each IDC	4178	1.1E-05	0.0E+00	2.2E-05	4.9E-04	3.1E-04	1.0E-05	1.1E-04	0.999	0.0E+00	0.0E+00
Normalized Precentages		<1%	0%	<1%	<1%	<1%	<1%	<1%	100%	0%	0%
Density for TWBIR, kg/m^3 (based on normalized lb/lb values)		0	0	0	1	0	0	0	1400	0	0

Comparison with AK Summary CPR Table	Ferrous Metal	Non-Ferrous Metal	CPR	Other (e.g., inorganic matrix, Portland cement)	TOTAL
Metals and CPR based on weighted average	0.0%	0.0%	0.0%	99.9%	100.0%
AK Summary, Rev. 0	0%	0%	4%	96%	100%

	IDC	Est. # of Drums (C535A)	# of Drums Examined	% Examined.
High Level Sludge/Cement	MD-836	4178	2871	69%

Mound Dates of Generation for Examined Containers:	1974-1985

Average Fill Factor:	88%
Average Net Wt (pounds):	555

Values based on WTS query performed on 10/11/06.

Updated 3/12/07

Estimated Waste Material Parameter Weights per Unit Waste (lb/lb) for BNINW216 First and Second Stage Sludge

WMP weight per unit of waste	# OF DRUMS	IRON BASED METALS	ALUMINUM BASED METALS	OTHER METALS	OTHER INORGANIC MATERIALS	CELLU-LOSICS	RUBBER	PLASTIC WASTE	INORGANIC MATRIX	ORGANIC MATRIX	SOILS GRAVEL
All drums with WTS data	8749	3.67E-03	4.15E-07	1.92E-04	1.30E-02	4.14E-05	4.12E-05	1.25E-03	9.82E-01	1.03E-04	0.00E+00
Weighted average using % drums of each IDC and weight of WMPs for each IDC	21373	3.29E-03	3.92E-07	1.56E-04	1.18E-02	3.64E-05	3.25E-05	1.05E-03	9.83E-01	1.31E-04	0.00E+00
Normalized Precentages		<1%	<1%	<1%	1%	<1%	<1%	<1%	98%	<1%	0%
Density for TWBIR, kg/m^3 (based on normalized lb/lb values)		4	0	0	13	0	0	1	1100	0	0

Comparison with AK Summary CPR Table	Ferrous Metal	Non-Ferrous Metal	CPR	Other (e.g., sludge)	TOTAL
Metals and CPR based on weighted average	0.3%	0.0%	0.1%	99.5%	100.0%
AK Summary, Rev. 4	<1%	<1%	10%	88%	98%

	IDC	Est. # of Drums (C535A)	# of Drums Examined	% Examined
First Stage Sludge	RF-001	9491	4934	52%
Second Stage Sludge	RF-002	11795	3741	32%
Solidified Sludge - Building 774	RF-800	87	74	85%
		21373	8749	41%

RFP Dates of Generation for Examined Containers:	1972-1988

Average Fill Factor:	83%
Average Net Wt (pounds):	417

16/17

Values based on WTS query performed on 10/11/06.

updated 3/12/07

Estimated Waste Material Parameter Weights per Unit Waste (lb/lb) for BNINW218 Building 374 Sludge

WMP weight per unit of waste	# OF DRUMS	IRON BASED METALS	ALUMINUM BASED METALS	OTHER METALS	OTHER INORGANIC MATERIALS	CELLU-LOSICS	RUBBER	PLASTIC WASTE	INORGANIC MATRIX	ORGANIC MATRIX	SOILS GRAVEL
All drums with WTS data	1980	4.6E-03	1.0E-06	6.3E-06	5.8E-02	6.9E-06	3.2E-05	5.5E-03	9.3E-01	0.0E+00	0.0E+00
Weighted average using % drums of each IDC and weight of WMPs for each IDC	2086	4.6E-03	1.0E-06	6.3E-06	5.8E-02	6.9E-06	3.1E-05	5.5E-03	9.3E-01	0.0E+00	0.0E+00
Normalized Precentages		<1%	<1%	<1%	6%	<1%	<1%	1%	93%	0%	0%
Density for TWBIR, kg/m^3 (based on normalized lb/lb values)		5	0	0	69	0	0	7	1100	0	0

Comparison with AK Summary CPR Table	Ferrous Metal	Non-Ferrous Metal	CPR	Other (e.g., sludge)	TOTAL
Metals and CPR based on weighted average	0.5%	0.0%	0.6%	98.9%	99.9%
AK Summary, Rev. 6	CPR and metals content was not presented in AK Summary.				

	IDC	Est. # of Drums (C535A)	# of Drums Examined	% Examined
Building 374 Dry Sludge	RF-007	1767	1684	95%
Solidified Direct Cementation Sludge	RF-803	36	24	67%
Building 374 Solidified Bypass Sludge	RF-807	283	272	96%
		2086	1980	95%

RFP Dates of Generation for Examined Containers:	1982-1988

Average Fill Factor:	80%
Average Net Wt (pounds):	440

Values based on WTS query performed on 10/11/06.

Updated 3/12/07

AK16

AMWTP

NON-CONFORMANCE REPORT

WIPP DATA - RTR

NCR #: 80112

Title: RTR Characterization	
Originator: Huggins, William	**Date Opened:** 08/23/13
Responsible Dept: Plant Manager	**Batch #:** RTR13-00191
Container ID: 10268533	**Tag Applied:** Yes
Characterization Problem:	
Originator Sign By: William Huggins	**Originator Sign Date:** 08/23/13
Production Comments: Three aerosol cans at bottom of drum.	**Approved Remediation:** SDOP
Performed By: Nicholas Styhl	**Performed Date:** 10/06/14

Waste Programs Evaluation/Verification:

SPM Verification: For this container, SDOP processing through the facility boxline will be an acceptable remediation for the nonconformance identified in this NCR. The container data has been reviewed and verified to meet the AMWTF requirements as outlined in LST-EC&P-11. Per MP-TRUW-8.45, the completed and signed Form-1862 shall be used as objective evidence for closing any open NCRs associated with the planned VOP. Additionally, the procedure requires that all NCRs be closed prior to providing Form-1862 to operations for physical build of the VOP. The container has been included on Form-1862, VOP-066-14 (see attached). Actions required for closure of this NCR are complete. NStyhl 10/06/14

SPM Verification Complete By: Nicholas Styhl	**SPM Verification Complete Date:** 10/06/14
MLLW/LLW Verification Complete By:	**MLLW/LLW Verification Complete Date:**
QA Closure Comments:	
QA Add'l Action Reqd By:	**QA Add'l Action Reqd Date:**
QA Verification Complete By:	**QA Verification Comp Date:**

INFORMATION ONLY

DIVIDER

PAGE

AMWTP
Advanced Mixed Waste Treatment Project

NON-CONFORMANCE REPORT

WIPP DATA - RTR

NCR #: 83719

Title: RTR Characterization

Originator: Moore, Dianna	**Date Opened:** 02/10/14
Responsible Dept: Plant Manager	**Batch #:** RTR14-00021
Container ID: 10230730	**Tag Applied:** Yes

Characterization Problem:

Originator Sign By: Dianna Moore	**Originator Sign Date:** 02/10/14

Production Comments: **Approved Remediation:** **TFUP**

Liquid is in a dish bottle at top of waste. Approx 1 pint
QA comment: NCR 55698 and NCR 83719 have been initiated for the same prohibited item. NCR 55698 was closed to allow NCR 83719 to document resolution of the prohibited item. LR030314
After review of the A/V recording- The waste consists of plastic bags, sheeting, tubing, PPE, cardboard, There appears to be approximately 1 pint of liquid in a plastic container near the top of the waste. There does not appear to be any dense items, heavy metal or structural pieces, present that would prevent treatment of this liquid by compaction in the facility. Recommend this container for treatment by compaction. MSorenson 04/16/2014

Performed By: Mark Sorenson	**Performed Date:** 04/16/14

Waste Programs Evaluation/Verification:

SPM Verification: This container has been verified as processed through RTR and Assay characterization and the associated batches have been validated through SPM. The container has been reviewed and determined to be an acceptable candidate for TFUP processing and final treatment by supercompaction. The Task List for the container has been updated to Drum Supercompaction, Payload Overpack and TFUP as required tasks. It has been determined that treatment of this nonconforming condition will be remediated through supercompaction when unoverpacking activities are complete. This NCR is recommended for closure to facilitate treatment activities after which the container will proceed through supercompaction. KB 4/17/14

SPM Verification Complete By: Kenny Burnside	**SPM Verification Complete Date:** 04/17/14
MLLW/LLW Verification Complete By:	**MLLW/LLW Verification Complete Date:**

QA Closure Comments:

QA Closure Comment: Verified in WTS that this container has been processed through RTR and Assay characterization and the associated batches have been validated through SPM. The container has been reviewed and determined to be an acceptable candidate for TFUP processing and final treatment by supercompaction. The Task List for the container has been updated to Drum Supercompaction, Payload Overpack, and TFUP as required tasks. It has been determined that treatment of this nonconforming condition will be remediated through supercompaction when unoverpacking activities are complete. This NCR is recommended for closure to facilitate treatment activities after which the container will proceed through supercompaction. C. Robison 04-17-14

QA Add'l Action Reqd By:	**QA Add'l Action Reqd Date:**
QA Verification Complete By: Camille Robison	**QA Verification Comp Date:** 04/17/14

AMWTP
Advanced Mixed Waste Treatment Project

NON-CONFORMANCE REPORT

WIPP DATA - RTR

NCR #: 83719

DIVIDER

PAGE

AMWTP
Advanced Mixed Waste Treatment Project

NON-CONFORMANCE REPORT

WIPP DATA - RTR

NCR #: 83514

Title: RTR Characterization	
Originator: Kearn, Kent	**Date Opened:** 01/30/14
Responsible Dept: Plant Manager	**Batch #:** RTR14-00009
Container ID: 10140256	**Tag Applied:** Yes
Characterization Problem:	
Originator Sign By: Kent Kearn	**Originator Sign Date:** 01/30/14

Production Comments:

Approved Remediation:

40 pts at the bottom
QA comment: NCR 56997 and NCR 83514 were both initiated for prohibited liquid identified within the waste of this container. NCR 56997 (resulting from a quick scan) was administratively closed to allow NCR 83514 (resulting from RTR14-00009 examination) to document resolution of the prohibited item. LR030314

Performed By:	**Performed Date:**
Waste Programs Evaluation/Verification:	
SPM Verification Complete By:	**SPM Verification Complete Date:**
MLLW/LLW Verification Complete By:	**MLLW/LLW Verification Complete Date:**
QA Closure Comments:	
QA Add'l Action Reqd By:	**QA Add'l Action Reqd Date:**
QA Verification Complete By:	**QA Verification Comp Date:**

NCR HOLD TAG

NCR NUMBER _____

EQUIPMENT/CONTAINER NUMBER _____

BRIEF DESCRIPTION _____

_____

_____

CHARACTERIZATION REJECT ☐

DO NOT REMOVE WITHOUT

QA AUTHORIZATION

AK18

Container Information

Container ID: 10268533 | IDC: RF | 750 | Pits 11 & 12 Debris | Other IDC: N/A | FGE Limit: .05 grams

Limit is based on historical data if no assay data is present

Overpacked: | Overpacked Inner Container ID: | Overpack | NCR(1)

Container Type: C | drum, 83 Gallon

Length: in. Width: in. Height: in. Box Volume: 0 cubic in.

Repaired Container: N | FRP Type:

Gross Weight: 260.19 lbs | Net Weight: 117.19 lbs

Fill Factor: 90 % | Waste Volume: gal.

PCB Present? N | Bulged requires venting? N | Potential Roaster Oxide N

Loose Contamination Present: N | Evidence of Staining: N | Offsite Waste? N

Items Of Interest

Current Location: 630, NE x,y,z: 18,2,1

FGE: .04 grams | FGE (Error): .01 grams | FGE + 1 Sigma Error: .05 grams

Crit Exempt: N

Process Code: SC | Origin Code: TSA-RE | Status: ACTIVE | Disposition: SCW | Shipping Category: | Pack Date: 01-Jun-1975 | WDS Status:

Type of waste/contents description

Waste Type Code	LLW	Low-Level Waste
Waste Matrix Code	S5490	Unknown/Other Heterogeneous Debris
Waste Profile Code		

EPA Code

Container Comment

new weight 262, old weight 200, 6-75, 11-31 71-160x.
CBEARD 16-JAN-11 Quick Scan 3RTR11-00007. This is an 83 gallon Overpack with a 55 gallon drum as the inner container. No liner. Waste appears to be paper and rags, plastic bagging, ppe, metal screens, small metal debris, plastic tubing, metal cans, aerosal cans 1 with 1TBLS liquid. Oil dry between the 55 and 83. Fill factor 95%.

Add New Container Comment

INFORMATION ONLY

Esign Comment

Comment Esig History

amws0063 - Remote Desktop Connection

DMS WTS / SPM Data Validation / DEBORAH PRETZER - [Nonconformance Report v1.8 - CONTAINER: 10268533]

File Edit General Offsite Waste AMWTP ICS Data Review MLLW Soil Shipments Reports POS Facility Admin Navig Offsite Sl

Nonconformance Report Listing for CONTAINER: 10268533

Title

NCR Type	Container ID	Batch ID	NCR ID	Status	Opened Date	Closed Date
AMWTP-3 NCR RTR	10268533	RTR13-00191	80112	QA CLOSURE	23-Aug-2013	
AMWTP-3 NCR RTR	10268533	NA	58803	CLOSED - DONE	16-Jan-2011	04-Sep-2013

Comment

Three aerosol cans at bottom of drum.

INFORMATION ONLY

Responsible Manager

Exit

NON-CONFORMANCE REPORT

WIPP DATA - RTR

NCR #: 80112

Title: RTR Characterization	
Originator: Huggins, William	**Date Opened:** 08/23/13
Responsible Dept: Plant Manager	**Batch #:** RTR13-00191
Container ID: 10268533	**Tag Applied:** Yes
Characterization Problem:	
Originator Sign By: William Huggins	**Originator Sign Date:** 08/23/13

Production Comments: **Approved Remediation:** **SDOP**

Three aerosol cans at bottom of drum.

Performed By: Nicholas Styhl	**Performed Date:** 10/06/14

Waste Programs Evaluation/Verification:

SPM Verification: For this container, SDOP processing through the facility boxline will be an acceptable remediation for the nonconformance identified in this NCR The container data has been reviewed and verified to meet the AMWTF requirements as outlined in LST-EC&P-11 Per MP-TRUW-8.45, the completed and signed Form-1862 shall be used as objective evidence for closing any open NCRs associated with the planned VOP. Additionally, the procedure requires that all NCRs be closed prior to providing Form-1862 to operations for physical build of the VOP. The container has been included on Form-1862, VOP-066-14 (see attached). Actions required for closure of this NCR are complete. NStyhl 10/06/14

SPM Verification Complete By: Nicholas Styhl	**SPM Verification Complete Date:** 10/06/14
MLLW/LLW Verification Complete By:	**MLLW/LLW Verification Complete Date:**
QA Closure Comments:	
QA Add'l Action Reqd By:	**QA Add'l Action Reqd Date:**
QA Verification Complete By:	**QA Verification Comp Date:**

INFORMATION ONLY

RECORD
U123AR12
B-2014-0243
SONEIL
09/24/2014

AK19

AMWTP Advanced Mixed Waste Treatment Project	**AK Source Document Review Summary**	Form-1068, Rev. 4 Effective: 01/08/09 Page 1 of 1

Implementing Document: MP-TRUW-8.13

1. Source Document Tracking Number: U123A	**2. Revision:** 12

3. Category

- ☐ Published Documentation
- ☐ Correspondence
- ☑ Unpublished Documentation
- ☐ Discrepancy

4. Title/Description Information: AK Document Reference Inventory. AMWTP Form-1084.

Document Number: N/A
Revision: N/A
Author: N/A
Date: 09/23/2014

5. AK Element	6. Generator Or Waste Type(s)	7. Location in Source Doc.	8. AK Information Summary:
N/A			

9. Document Summary:

Listing of all Acceptable Knowledge source documents accumulated to date for accessibly- and retrievably-stored wastes to be characterized/treated at the AMWTP. List includes Tracking Number, Document Number, Document Title/Description, Document Author and Document Date.

10. Source Document Data Limitations (if any):

Listing includes documents that will be submitted to Records. These documents are identified as "reserved for".

11. AK Expert:	Dan Arrenholz	Dan Arrenholz	9/23/2014
	Print	Sign	Date

Implementing Document: MP-TRUW-8.13

TRACKING NUMBER	DOCUMENT NUMBER	DOCUMENT TITLE/DESCRIPTION	DOCUMENT AUTHOR	DOCUMENT DATE
C001A	TLC-1-83	Content Code 7 Waste (TLC-1-83)	T.L. Clements, Jr.	01/17/1983
C002A	N/A	P-Ci Calculations for WG Pu	D.L. Ziegler	11/30/1983
C003A	86-RF-1518	Rockwell Discussions with EG&G Idaho, Inc. (86-RF-1518)	W.D. Reinhart	05/08/1985
C004A	N/A	Memorandum to J. R. Nicks, Area Manager, RFAO. "Rockwell WIPP-WAC Nonconforming Sludge and Other Waste Management Concerns."	Joseph M. McGough	02/14/1985
C005A	TLC-11-86	Internal correspondence to L. A. Cook. "Addition of Content Code 303 to the Certifiable Waste Categories." (TLC-11-86)	Thomas L. Clements	01/23/1986
C006A	WIPP-0664-ICOR-0192	Internal Letter from A. C. Ficklin to W. D. Reinhart, D. M. Krieg, R. D. Gaskins, and G. J. Carnival. Box and Drum Identification to Meet WIPP Requirements. (WIPP-0664-ICOR-0192)	A. C. Ficklin	02/04/1986
C007A	JDW-08-86	External letter to Ann Ficklin, Manager Solid Waste Operations, Rockwell International. "Item Description Codes." (JDW-08-86)	J. D. Wells, RWMC/SWEPP Operations Support	03/27/1986
C008A	N/A	Internal correspondence from G.F. Jaskot to Distribution. "Certification Waste Documentation."	G. F. Jaskot	05/09/1986
C009A	TLC-40-86	Internal correspondence from T. L. Clements, Jr. to J. M. Bower. "Addition of Content Codes 312 and 377 to the Certifiable Waste Category." (TLC-40-86)	T. L. Clements, Jr.	05/19/1986
C010A	JDW-14-86	External letter from J. D. Wells (RWMC/SWEPP) to W. D. Reinhart (Waste Cert. RFP), Nonstandard Shipment Approval (JDW-14-86)	J.D. Wells	06/19/1986
C011A	N/A	Letter from G.F. Jaskot to Distribution. "TRU Waste Determination."	G. F. Jaskot	10/21/1986
C012A	WIPP-0057-RPTS-0192	Internal Correspondence from D. Vigil and W.A. Meisner to G. L. Hickle. "Diatomite-Cement-Sludge Mixture." (WIPP-0057-RPTS-0192)	D. Vigil and W. A. Meisner	12/15/1986
C013A	N/A	Letter from William F. Kane to Distribution. "TRU/LLW Determination for Waste to Meet the WIPP-WAC."	William F. Kane	02/18/1987
C014A	N/A	Internal correspondence from G.F. Jaskot to B.C. Barrett. IDC and WFN Revision.	G. F. Jaskot	03/24/1987

Implementing Document: MP-TRUW-8.13

TRACKING NUMBER	DOCUMENT NUMBER	DOCUMENT TITLE/DESCRIPTION	DOCUMENT AUTHOR	DOCUMENT DATE
C015A	WIPP-0095-RPTS-0192	Internal corrspondence from G.F. Jaskot to B. C. Barrett. "Certified IDC Update." (WIPP-0095-RPTS-0192)	G. F. Jaskot, Rockwell International	04/15/1987
C016A	RPB-59	Internal correspondence from R.P. Brugger to Waste Review Board. "Waste Container Tare Weights" (RPB-59)	R. P. Brugger	04/20/1987
C017A	N/A	Internal letter from C.D. Bretzke to B. A. Reynolds. "Solid Waste Information Management System Data Package."	C. D. Bretzke	05/06/1987
C018A	dk2	Internal letter from L. A. Abila (Waste Compliance & Planning - RFP) to W. D. Reinhart (Waste Certification-RFP), Guidelines for Repackaging Waste at Size Reduction (dk2)	L. A. Abila	06/02/1987
C019A	N/A	Internal correspondence to R. P. Brugger. "Drum Paint Requirements."	L. A. Bearly	07/06/1987
C020A	N/A	Facsimile transmissions from Jeff Paynter to Al Morgan, NMC. "Drums to be shipped as TRU Mixed Waste to 664."	Jeff Paynter	09/22/1987
C021A	WIPP-0643-ICOR-0192	Internal correspondence from J. K. Paynter to R. D. Mullet. "RCRA Mixed Waste IDCs." (WIPP-0643-ICOR-0192)	J. K. Paynter	10/12/1987
C022A	N/A	Internal correspondence from C.D. Bretzke to All Supervision. "New and Revised Waste Item Description Codes (IDCs)."	C. D. Bretzke	11/30/1987
C023A	N/A	Internal correspondence from C. D. Bretzke to W. D. Reinhart. "Funding EG&G Evaluation of Sludge Processing Techniques."	C. D. Bretzke	02/11/1988
C024A	N/A	Internal correspondence from C. D. Bretzke to Distribution. "Waste IDCs for Combustibles."	C. D. Bretzke	02/19/1988
C025A	MST-12-ARO-88-052	Internal correspondence from C. L. Foxx to B. T. Reich. "Air Sparging to Eliminate Pyrophoric Sodium." (MST-12-ARO-88-052)	C. L. Foxx	02/25/1988
C026A	TLC-22-88	External letter from T. L. Clements, Jr. to Jeff Paynter, Rocky Flats Plant. "Content Code Description Data for TRUPACT II Payload Compliance Plan." (TLC-22-88)	T. L. Clements, Jr	04/04/1988
C027A	N/A	Internal correspondence to E. A. Dicarlo from J. A. Hayden. "Disposal of Organic Lab Waste (DHDECMP in Xylene) from the Plutonium Lab, Bldg. 559."	J. A. Hayden	04/18/1988

TRACKING NUMBER	DOCUMENT NUMBER	DOCUMENT TITLE/DESCRIPTION	DOCUMENT AUTHOR	DOCUMENT DATE
C028A	JLH/009/1197	External letter from Jeff Harrison to Sheila Hailey, LMITCO. "Comments on EDF RWMC-942, Rev 0; INEL/INT-97-00214, Rev. 0." November 14, 1997. (JLH/009/1197)	Jeff Harrison	11/14/1997
C029A		Internal correspondence from H. K. Fry to G. L. Aguero. "Counting IDCs 800 through 823 on Segmented Drum Counters." ()	H. K. Fry	04/29/1988
C030A	WIPP-0550-ICOR-0192	Internal correspondence C.D. Bretzke to Distribution. "Item Descripton Codes (IDCs) for Non-PSZ Combustible and Depleted Uranium Oxide." (WIPP-0550-ICOR-0192)	C. D. Bretzk	5/12/1988
C031A	N/A	Internal Correspondence from R.T. Scott to Distribution. "Line Generated Waste Drum Inspection."	R.T Scott	8/24/1988
C032A	88-RF-2813.	External Letter to J. N. Davis, Idaho National Engineering Laboratory. "Data Package Information Change for Drum D40197-0743-18283." (88-RF-2813.)	J. K. Paynter	9/9/1988
C033A	DMH-1-88.	External letter to J. Paynter, Rockwell International. "Content Code 700." (DMH-1-88.)	D. M. Hartley	12/22/1988
C034A	N/A	Memorandum to A. E. Whiteman, Area Manager, RFAO. "RFP Certification and QA Plan Formal Approvals and Reaudit."	E. K. Hunter	12/20/1988
C035A	89-RF-0195	External letter from J. K. Paynter to Marilyn Warrant, Sandia National Laboratories. "Assay Information for Current Content Code Assessment." (89-RF-0195)	J. K. Paynter	1/18/1989
C036A		Random Surveillance Implementation.	F. G. Trevino	1/30/1989
C037A	WCP7-28	Internal correspondence from C.D. Bretzke, et al. to Distribution. "New IDCs." WCP7-28. (WCP7-28)	C. D. Bretzke	2/8/1989
C038A	WCP7-29	Internal correspondence from C.D. Bretzke to C.E. Trump. "Deviation from WO-4034, 'Waste Packaging Requirements.'" (WCP7-29)	C.D. Bretzke	2/8/1989
C039A	WCP8-20.	Internal correspondence from J.K. Paynter to B.C. Barrett. "Radionuclide Information Required for TRUPACT II Shipments." WCP8-20. March 23, 1989. (WCP8-20.)	J. K. Paynter	3/23/1989
C040A	N/A	Internal correspondence from F. G. Trevino to Distribution. "Changes to Random Surveillance Program."	F. G. Trevino	4/10/1989

Implementing Document: MP-TRUW-8.13

TRACKING NUMBER	DOCUMENT NUMBER	DOCUMENT TITLE/DESCRIPTION	DOCUMENT AUTHOR	DOCUMENT DATE
C041A	TLC-65-89	External letter from T. L. Clements, Jr. to C. D. Bretzke, Rocky Flats Plant. "Transuranic Waste Stream Profile Statements." (TLC-65-89)	T. L. Clements, Jr.	5/8/1989
C042A	WCP8-85	Internal correspondence from C. D. Bretzke to R. C. Lerche. "Hazardous Constituent Information." WCP8-85. (WCP8-85)	C. D. Bretzke	5/30/1989
C043A	N/A	Internal correspondence from J. A. Detamore, et al. to Distribution. "New IDC/Revised IDCs."	J. A. Detamore, et al.	7/3/1989
C044A	WIPP-0477-ICOR-0192	External letter to Dale Wells. EG&G Idaho, Inc. "Information Request Concerning New IDCs and Resin in IDC 806." (WIPP-0477-ICOR-0192)	C. D. Bretzke	07/08/1989
C045A	PT-76	Internal correspondence to J. A. Detamore. "TRUPACT II Waste Requirements." (PT-76)	J. K. Paynter	7/25/1989
C046A	N/A	Use of Passive-Active Drum Counter. Presentation given by Dr. McKamy of the Safeguards Measurements Group, Rockwell International, Rocky Flats Plant.	Dr. McKamy	1988
C047A	N/A	Interview record and associated documentation from Mr. William V. Conner by T. Widner and J. Lamb	T. Widner, J. Lamb	8/13/1991
C048A	N/A	Interview Record of Mike Simmons by T. Widner and D. Herrick. August 6, 1991.	T. Widner and D. Herrick	08/06/1991
C049A	N/A	Interview Record of Ronald P. Teel by T. Widner and D. Herrick. August 7, 1991.	T. Widner and D. Herrick	8/7/1991
C050A	N/A	Informal memorandum from J. K. Paynter to Al Morgan, EG&G Rocky Flats, Inc. "Creation and deletion dates of IDCs."	J. K. Paynter	6/16/1994
C051A	N/A	Telecon between Jeff Paynter and Dick Saiki, EG&G RFP. "Composition of Rocky Flats Leaded Gloves."	Jeff Paynter	7/19/1994
C052A	N/A	Telecon between Jeff Paynter and Gary Dingham, EG&G RFP. "RTR Acceptance of Mixed IDCs."	Jeff Paynter	7/27/1994
C053A	N/A	Telecon between Jeff Paynter and Al Morgan, EG&G RFP. "Usage of IDC 481."	Jeff Paynter	1/23/1995
C054A	N/A	Internal correspondence from Sheila M. Hailey to Distribution. "Oakridge pH analysis."	Sheila M. Hailey	2/1/1996

Implementing Document: MP-TRUW-8.13

TRACKING NUMBER	DOCUMENT NUMBER	DOCUMENT TITLE/DESCRIPTION	DOCUMENT AUTHOR	DOCUMENT DATE
C055A	ED-AL-(MLA)-96-005	Internal correspondence from Mary L. Adamic to John Krsul. "pH Determination of Drum Free Liquids." ED-AL-(MLA)-96-005. (ED-AL-(MLA)-96-005)	Mary L. Adamic	2/16/1996
C056A	N/A	Telecon between Jeff Paynter and Jim Doktor, SafeSites. "Resolution of Solvent Usage with Graphite." March 25, 1996.	Jeff Paynter	3/25/1996
C057A	N/A	Drum gasket, liner usage at RFP compiled by Larry Bearly. 1989.	Larry Bearly	1989
C058A	N/A	Informal notes from Jeff Paynter regarding HEPA and Drum Repackaging at the Size Reduction Facility. Not dated.	Jeff Paynter	N/A
C059A	N/A	Excerpt from Rocky Flats Plant Quality Report August 1986. "Transuranic and Low Level Waste 1985 – 1986."	Rocky Flats Plant	1986
C060A	LSH/001/0496	Memorandum to File from L. S. Hendrickson. "Discrepancy Report on Graphite Waste Group." (LSH/001/0496)	L. S. Hendrickson	4/2/1996
C061A	jkp/000/0496	Memorandum to File. "Graphite Process Procedure from Building 707." (jkp/000/0496)	Jeff Paynter	4/1/1996
C062A	N/A	External letter from Jacqueline W. Sales, US EPA, to Frank Czigler, S&W Waste Inc.	Jacqueline W. Sales	5/20/1987
C063A	JDW-36-85	External letter from J. D. Wells to Ann Ficklin, Rockwell International Corporation. "Content Code Reconciliation." (JDW-36-85)	J. D. Wells	11/8/1985
C064A	DEK-10-86	Internal correspondence from D. E. Kudera to T. L. Clements, Jr. "Combustibility of Graphite." DEK-10-86. (DEK-10-86)	D. E. Kudera	12/2/1986
C065A	N/A	Telecon between Jeff Paynter and Mike Simmons, SMC. "Plating Wastes."	Jeff Paynter	4/8/1996
C066A	N/A	Telecon between Jeff Paynter and Steve Cunningham, WorldWide Security. "Declassification of Graphite Molds."	Jeff Paynter	4/23/1996
C067A	N/A	Telecon between Jeff Paynter and John Collins, RMRS. "IDC 301 Drums from Buildings 371 and 559."	Jeff Paynter	4/24/1996
C068A	N/A	Memorandum from Jeff Paynter and Linda Hendrickson. "WSRIC Processes that Began after 1989."	Jeff Paynter	4/25/1996
C069A	N/A	Internal correspondence from J. A. Detamore, et al. to Distribution. "New IDC/Revised IDCs."	J. A. Detamore, et al	7/3/1989

Implementing Document: MP-TRUW-8.13

TRACKING NUMBER	DOCUMENT NUMBER	DOCUMENT TITLE/DESCRIPTION	DOCUMENT AUTHOR	DOCUMENT DATE
C070A	N/A	Internal correspondence from R. D. Thiel to A. M. Faucette. "TCLP Analysis of Raschig Rings."	R. D. Thiel	2/24/1994
C071A	N/A	Rocky Flats Personnel Interview of John Morrison by Flack and Herrick.	Flack and Herrick	8/14/1991
C072A	N/A	Record of Conversation between Rod Hoffman, recorded by Doug Herrick and Jennifer Lamb	Doug Herrick, Jennifer Lamb	9/4/1991
C073A	N/A	Record of conversation of Maurie Maas, recorded by Doug Herrick and Jennifer Lamb, ChemRisk	Doug Herrick and Jennifer Lamb	
C074A	JKP/026/0496	External correspondence from Jeff Paynter to Don Kudera, Lockheed Idaho Technologies Company. "Information regarding Three IDC 301 Drums." (JKP/026/0496)	Jeff Paynter	4/24/1996
C075A	N/A	Telecon between Jeff Paynter and Don Kudera, Lockheed Idaho Technologies Company. "Prefixes for Organic Sludges."	Jeff Paynter	5/1/1996
C076A	MEMO/001/0596	Internal Memorandum to File. "Combustibles and Plastic Characterization" (MEMO/001/0596)	Jeff Harrison	5/23/1996
C077A	N/A	External Memorandum from R. B. Hoffman to K. C. Gerard, Lockheed Idaho Technology Company. "Classification Waste."	R. B. Hoffman	4/24/1996
C078A	MEMO/002/0596	Internal Memorandum to File from Jeff Harrison. "Combustibles and Plastic Characterization." (MEMO/002/0596)	Jeff Harrison	5/30/1996
C079A	N/A	Telecon between Wynn Eakins and Karlan Richards, EG&G Rocky Flats, Inc., Characteristic Codes for B774 Waste	Wynn Eakins	9/8/1994
C080A	N/A	Telecon between Wynn Eakins and Pam Edrich, EG&G Rocky Flats, Inc. "Characterization of Combustible Laboratory Waste."	Wynn Eakins	9/9/1994
C081A	MEMO/001/0596	Memorandum to file from Jeff Harrison (Wastren), Light Metal Characterization (MEMO/001/0596)	Jeff Harrison	5/29/1996
C082A	N/A	Telecon between Jeff Harrison and Al Morgan of SafeSites of Colorado. "Generation of Leached Light Metal (IDC 481)."	Jeff Harrison	5/28/1996
C083A	N/A	Telecon to Al Morgan, SafeSites of Colorado, from Jeff Harrison. "Generation of Leached Light Metal (IDC 481)."	Jeff Harrison	5/29/1996
C084A	N/A	Memorandum to File from Jeff Harrison. "Light Metal (IDC 480) Generated in Building 371 Analytical Laboratory."	Jeff Harrison	5/29/1996

Implementing Document: MP-TRUW-8.13

TRACKING NUMBER	DOCUMENT NUMBER	DOCUMENT TITLE/DESCRIPTION	DOCUMENT AUTHOR	DOCUMENT DATE
C085A	N/A	Memorandum from Thom Putney. "Historical Constituents of IDC 800/801."	Thom Putney	11/8/1993
C086A	N/A	Memorandum from Jeff Paynter to Pamela of IT Corporation. "Use of the Complexing Agent DHDECMP."	Jeff Paynter	2/7/1989
C087A	N/A	Telecon between Jeff Paynter and Carrie Wesley of RMRS. "Process Wastes Treated in Building 374."	Jeff Paynter	5/29/1996
C088A	N/A	Telecon between Jeff Paynter and Rod Hoffman/Bob Riddle of DOE RFFO Classification/SAIC. "Composition of "Grip" and ZPPR Fuel Elements."	Jeff Paynter	5/29/1996
C089A	N/A	Telecon between Jeff Harrison and Al Morgan of SafeSites of Colorado. Creation of IDCs 440, 441, 442, 444, and 855.	Jeff Harrison	6/3/1996
C090A	N/A	Telecon between Jeff Harrison and Ron Bowen of SafeSites of Colorado. "Raschig Ring Tanks in Building 371."	Jeff Harrison	6/3/1996
C091A	N/A	Memorandum to File from Jeff Harrison. "Glass Characterization."	Jeff Harrison	6/3/1996
C092A	JKP//0696	Memorandum to File from Jeff Paynter. "Resolution of Conflicting Characterization Information for Waste Group #4." (JKP//0696)	Jeff Paynter	6/4/1996
C093A	N/A	Letter assumed to have been written by David P. Simonson to Fred Dowsett of the Colorado Department of Health, and corresponding response letter. Discussion re. Definition of Hazardous Waste as defined by Colorado Hazardous Waste Regulations. November 9, 1989.	David P. Simonson	11/9/1989
C094A	N/A	DOE RFO Contact Record from David Maxwell to Ken Niswonger of Colorado Department of Health. "Confirm regulatory interpretation that listed waste codes on lab samples do not carry over to the waste generated from the analysis of the sample."	David Maxwell	9/9/1994
C095A	LCB-460-104	Waste Technical Support (WTS) Documentation of Guidance from L. C. Baaso to E. E. Ericson. "Leaded Glovebox Gloves." (LCB-460-104)	L. C. Baaso	6/9/1993
C096A	MSL-2507	External Letter from K. J. Grossaint to J. Long. "Identification and Thermal Studies of the Residue from Nitric Acid Reaction with Leaded Neoprene Gloves." (MSL-2507)	K. J. Grossaint	3/30/1973
C097A	N/A	External Letter to Michael S. Karol of DOE Rocky Flats Office. Discussion re. Reclassification of certain waste streams formerly classified as subject to Land Disposal Restrictions.	Frederick R. Dowsett	8/11/1993

Implementing Document: MP-TRUW-8.13

TRACKING NUMBER	DOCUMENT NUMBER	DOCUMENT TITLE/DESCRIPTION	DOCUMENT AUTHOR	DOCUMENT DATE
C098A	JKP/000/0696	Memorandum to File from Jeff Paynter. "Justification for not including DCHP in Building 371." (JKP/000/0696)	Jeff Paynter	6/7/1996
C099A	MEMO/001/0696	Memorandum to File from Jeff Harrison. "Discrepancy with Washing of Leaded Gloves and Aprons." (MEMO/001/0696)	Jeff Harrison	6/13/1996
C100A	N/A	Telecon between Jeff Harrison and Al Morgan of SafeSites of Colorado. "Washing of Leaded Gloves."	Jeff Harrison	6/13/1996
C1000S	N/A	Record of Communication Subject: No heat-sealed bags in containers from Building 232-Z	D.I. Rollsson	04/28/2008
C1001A	M4T00-TRU-08-078	Memorandum - Subject: AK Documentation of Prohibited Liquids in the MPFPD Waste Stream (M4T00-TRU-08-078)	M.I. Rollosson	06/11/2008
C1002A	N/A	Letter - Subject: ZPPR Pu Scrap from Dow	J.T. Christy, et.al.	07/10/1969
C1003S	N/A	Record of Communication Subject: Rad Pads	M. I. Rollosson	08/06/2008
C1004A	N/A	Email - Subject: RE: PFP Pu/Be Sources	T.J. Venetz	10/10/2006
C1005S	N/A	Email - Subject: Brief Discription of Disposition of Excess Sources, Standards, and Miscellaneous SNM	S. W. Bisping	09/03/2008
C1006A	N/A	Origin of Plutonium	D. C. Lini	10/29/2003
C1007S	N/A	Record of Communication - Subject: Historical Waste From PFP	R. J. Swan, et. al.	07/25/2007
C1008S	N/A	Disposition of Sources and Standards	C. S. Sutter	06/18/2008
C1009A	N/A	Fax To: R. Clinton Re: A-Lab Slag	E. G. Backlund	02/17/2000
C101A	MEMO/002/0696	Memorandum to File from Jeff Harrison. "Characterization of Lead Containing Waste (IDCs 320 and 339)." (MEMO/002/0696)	Jeff Harrison	06/17/1996
C1010A	N/A	Interview of Dave Preston, Coring & Solid Sampling SME Lead and Drum Treatment & Repackaging SME Lead, BBWI, by Carolyn Abbott, AK SME re: Clarification of waste container processing at AMWTP.	Carolyn Abbott, PhD	04/13/2011
C1011A	HWD 061410-01	Letter to File Re: HWD 061410-01 Supercompactor Squeezants (IDC BN-518 and BN-632) (HWD 061410-01)	Waste Services	02/17/2020
C1012A	N/A	Email correspondence between Kirk M. Green, ICP and Carolyn Abbott, AMWTP Re: NRF waste.	Kirk Green and Carolyn Abbott	01/09/2011

Implementing Document: MP-TRUW-8.13

TRACKING NUMBER	DOCUMENT NUMBER	DOCUMENT TITLE/DESCRIPTION	DOCUMENT AUTHOR	DOCUMENT DATE
C1013A	N/A	Email correspondence between Kirk M. Green, ICP and Pamela Fetzer and Carolyn Abbott, AMWTP re: Information for contents of Pad 1 Cells 1, 2 and Heavy Drum.	Kirk Green, Pamela Fetzer, and Caolyn Abbott	03/11/2009
C1014A	N/A	Email correspondence between Kirk Green, ICP and Carolyn Abbott, AMWTP re: SDA waste - RWMIS data.	Kirk Green and Carolyn Abbott	06/17/2009
C1015A	N/A	Email correspondence between Kirk Green, ICP and Carolyn Abbott, AMWTP re: data from RWMIS database for TSA 12/1/72 through 6/30/73 (Pad 1, Cell 5).	Kirk Green and Carolyn Abbott	04/04/2011
C1016A	WJE-001-11	Interoffice Memorandum, Estimated Number of Containers for the BN600 Polychlorinated Biphenyl Contaminated debris Waste Stream (WJE-001-11)	William J. Erhardt (AMWTP, AKE)	05/12/2011
C1017S	N/A	INTC050203 return to AMWTP	Elizabeth C. Thiel	01/09/2008
C1018A	HWD 041811-03	HWD 041811-03, WMF-676 PCB Contaminated Debris (BN-600), 7-20-11 (HWD 041811-03)	AMWTP Waste Services	07/20/2011
C1019A	RCM-001-2011	Memo to File, Waste Material Parameter (WMP) Weight per Unit Waste Calculations for the AMWTP WMF-676 PCB Contaminated Debris Waste Stream (RCM-001-2011)	Randall C. Morris	05/24/2011
C102A	N/A	Letter from Frederick R. Dowsett (Colorado Department of Health) to Michael S. Karol (DOE/Rocky Flats).	Frederick R. Dowsett (Colorado Department of Health)	8/11/1993
C1020S	N/A	Email correspondence between Kirk M. Green, ICP and Carolyn Abbott, AMWTP re: Pits 11 and 12 disposal data.	Kirk Green	05/16/2020
C1021A	ID-C101	Retrieval Area Chemical Evaluation and RCRA Hazards Analysis (ID-C101)	CCP	12/17/2010
C1022A	N/A	Email correspondence between Daniel L. Benedict and AKE: Timothy E. Venneman Re: BN-600 material (drum carcasses & liners) packaging.	Daniel Benedict	07/20/2011
C1023A	ECT-001-11	Estimated Waste Stream Volumes and Waste Material Parameter Weights for 2011 Annual Transuranic Waste Inventory Report Update - ECT-00l-11 (ECT-001-11)	Elizabeth C. Thiel	04/04/2011
C1024A	n/a	Environmental PCB Decontamination Steps (n/a)	Stephen Obert	06/15/2011
C1025A	AE-I-002	Intra-laboratory Memo re: IFR Fuels Work (AE-I-002)	A.G. Hins	08/13/1984

Implementing Document: MP-TRUW-8.13

TRACKING NUMBER	DOCUMENT NUMBER	DOCUMENT TITLE/DESCRIPTION	DOCUMENT AUTHOR	DOCUMENT DATE
C1026A	N/A	Correspondence to Mr. Em M. King, Oak Ridge National Laboratory re: ANL-E Radioactive Waste Categories and Descriptions	L.A. Neimark, ANL-E	04/10/2011
C1027S	N/A	Intra-laboratory memo to: ANL-E Environmental Compliance Representatives Re: Photo Processing Solutions - Waste Characterization	R. G. Kolzow and J. R. Thuot	12/19/1990
C1028S	N/A	Intra-laboratory Memo to M. J. Ryan re: Potentially Hazardous Materials in "Operational Clean Sweep"	L. A. Neimark, MST	03/21/1983
C1029A	N/A	Survey forms and follow-up communication Re: Building 212 waste stream generation	Noreen Keven and W. R. Livernash	05/31/1988
C103A	N/A	Telecon between Jeff Harrison and Al Morgan of SafeSites of Colorado. "Creation of Filter IDCs."	Jeff Harrison	6/6/1996
C1030S	N/A	Memo to C. A. DeLorenzo re: Safety Analysis for Handling Tritium-containing Compounds in the AGHCF.	L. A. Neimark	05/30/1984
C1031S	TLC-224-92	Letter to Mr. J. T. Case, US DOE, re: Strategy Plan for Long-Term Management and Storage of Remote-Handled (RH) Transuranic (TRU) Waste. Includes the revised Strategy Plan dated November 1992. (TLC-224-92)	T. L. Clements, Jr.	11/30/1992
C1032S	N/A	Intra-Laboratory Memo to Distribution re: Draft of the Hot-cell Survey	L. A. Neimark	08/20/1973
C1033S	N/A	Intra-Laboratory Memo to A. C. Smith Re: Chemical Forms in AGHCF Transuranic Wastes	L. A. Neimark	04/12/1989
C1034S	ANL-E-C130	Intra-Laboratory Memo to Waste Handling Procedures Manual Holders Re: Packaging of Intermediate Level* Radioactive Wastes for Disposal (Liquids) (ANL-E-C130)	C. L. Cheever, ANL-E Acting Waste Management Coordinator	09/12/1979
C1035A	8407-AGH-001	Intra-laboratory Memo re: IFR Fuels Development (8407-AGH-001)	A.G. Hins	07/06/1984
C1036A	8711-AGH-03	Intra-laboratory memo re: IFR Fuel Interdiffusion Studies (Davananda) Test Capsule Evaluation (8711-AGH-03)	Allan Hines	05/13/1988
C1037A	N/A	Intra-Laboratory Memo to IFR Distribution Re: Diffusion Couple Studies - As Received Materials Structures with Attached report "Metallographic Examination of As-Received Clad and Fuel Materials for IFR Diffusion Studies"	A. G. Hins	04/22/1985

Implementing Document: MP-TRUW-8.13

TRACKING NUMBER	DOCUMENT NUMBER	DOCUMENT TITLE/DESCRIPTION	DOCUMENT AUTHOR	DOCUMENT DATE
C1038S	N/A	Intra-Laboratory Memo To: L. A. Neimark Re: Bi-Monthly Report on Cermet Fuels - April/May 1987 Process Integration and Verification	H. R. Thresh	06/04/1987
C1039S	N/A	Intra-laboratory Memo to: Distribution Re: Fissile Scrap Passivation, Activity 41603	A. G. Hins	12/2//1977
C104A	N/A	Telecon between Jeff Harrison and Jack Weaver of SafeSites of Colorado. "CWS Filters."	Jeff Harrison	6/18/1996
C1040S	ANL-CMTI-8936	Safety Review. Proposed Experiment. Alpha Radiolysis of TRUEX-CCl4 with 241Am (ANL-CMTI-8936)	D. Kalina	05/23/1985
C1041A	ANL-CMTI-8955	Safety Review-PFP Waste Demonstration Run in G-117 (ANL-CMTI-8955)	R.A. Leonard	06/17/1985
C1042A	ANL-CMTI-9012	Safety Review of Facilities for the Determination of Hydrogen, Oxygen, and Nitrogen in Plutonium-Bearing Metals, Alloys, Oxides, Carbides, and Some Metal Compounds; Building 205, Room G-102 (ANL-CMTI-9012)	H.T. Goodspeed, R.R. Heinrich, D.G. Graczyk	09/16/1985
C1044A	N/A	Pad 1, Cells 1 and 2 Retrieval Containment Enclosure/Inner Containment Enclosure Newly Generated Waste - TV-001-12	Tim Venneman	03/28/2011
C1045A	MLJ- 003-11	Updated Waste Material Parameter Weight per Unit of Waste Calculations for the BN51O.1 Supercompacted Debris Waste Stream (MLJ- 003-11)	Micky L. Johnson, AKE	09/27/2011
C1046A	MLJ-004-11	Waste Material Parameter Weight per Unit Waste Calculations for Proposed BN421 Plutonium Recovery Ash Waste Stream (MLJ-004-11)	Micky L. Johnson	09/28/11
C1047A	ECT-001-10	Waste Container Inventories Not Included in Advanced Mixed Waste Treatment Project Transuranic Baseline Reports (ECT-001-10)	Elizabeth C. Thiel	12/16/2010
C1048A	JHK-002-11	Co-Located Core Sample Control Charts (JHK-002-11)	Jason Kettel	10/06/2011
C105A	N/A	Interview record of John Milner, Jr. by T. Widner and S. Flack. ChemRisk.	T. Widner and S. Flack	8/20/1991
C1050A	CBFO:OQA:CGF:MAG: 11-1975:UFC 2300.00	Interim Audit Report for Recertification Audit A-12-03 of the AMWTP (CBFO:OQA:CGF:MAG: 11-1975:UFC 2300.00)	Courtland G. Fesmire, PE	11/03/2011
C1051A	HWD 071511-01	HWD 071511-01, Hazardous Debris from Zone 3 of the AMWTF (IDC) BN-508 (HWD 071511-01)	Brett Stacey, Waste Generator	09/16/2013
C1052A	CKA-003-09	Interoffice memorandum, CKA-003-09,Acceptable Knowledge Telecon Interview Form. (CKA-003-09)	Carolyn Abbott	

Implementing Document: MP-TRUW-8.13

TRACKING NUMBER	DOCUMENT NUMBER	DOCUMENT TITLE/DESCRIPTION	DOCUMENT AUTHOR	DOCUMENT DATE
C1053A	CBFO:OQA:CF:CC:12-1338:UFC:2300.00	Transmittal of the Recertification Final Report for the Advanced Mixed Waste Treatment Project, Audit A-12-03. (CBFO:OQA:CF:CC:12-1338:UFC:2300.00)	Jose R. Franco, Manager, Carlsbad Field Office	03/16/2012
C1054S	N/A	Email from Roy P. Grant to Randall C. Morris re: Summary of our conversation yesterday	Roy P. Grant	03/28/2012
C1055S	RM-001-12	Memo to File: Correcting the IDC assignment of MFC waste with content codes 153, 154, and 155 (RM-001-12)	Randall C. Morris	04/03/2012
C1056S	N/A	Email from Roy P. Grant to Randall C. Morris RE: Another problem with the MFC Rad data	Roy P. Grant	04/11/2012
C1057A	CBFO:NTP:NC:GL:12-0483:UFC 2300.00	Advanced Mixed Waste Treatment Project - Recertification Audit A-12-03 (CBFO:NTP:NC:GL:12-0483:UFC 2300.00)	Jose R. Franco, Manager, Carlsbad Field Office	05/24/2012
C1058S	N/A	E-mail correspondence Re: Reciept of MLLW	BBWI/AMWTP	01/17/2008
C1059A	N/A	F039 HWN applicability to INL GEM Project	Brent Burton, CWI	06/27/2012
C106A	N/A	Telecon between Jeff Harrison and Al Morgan of SafeSites of Colorado. "CWS Filters."	Jeff Harrison	6/18/1996
C1060S	N/A	Argonne National Laboratory Intra-Laboratory Memo to D.C. Wade, re: Response to MC&A Questions in Support of HFEF-S Fuel Reprocessing Operations	R. Villarreal	01/24/1989
C1061S	ECS-EAG-950125	Transmittal of Draft Building 235-F Facilities Preliminary Hazards Analysis (U) (ECS-EAG-950125)	D.E. Rossi	06/08/1995
C1062S	N/A	Upcoming Lot 3 RH-TRU radioanalytical work	Laug, Jeffrey S.	09/06/0112
C1063S	N/A	Small dry electrical capacitors and transformers.	Carol R. Anderson	September
C1064S	N/A	INTEC questions	John M. Espinosa	07/25/2012
C1065A	JHK-001-11	Acceptable Knowledge Accuracy Assessment for July 1, 2010 to June 30, 2011 (JHK-001-11)	Jason Kettel	09/13/2011
C1066S	N/A	Box 10130773 and NCR# 72914	Marty Woodbury	10/03/2012
C1067A	JHK-002-12	Acceptable Knowledge Accuracy Assessment for July 1, 2011 to June 30, 2012 (JHK-002-12)	Jason Kettel	10/11/2012

Implementing Document: MP-TRUW-8.13

TRACKING NUMBER	DOCUMENT NUMBER	DOCUMENT TITLE/DESCRIPTION	DOCUMENT AUTHOR	DOCUMENT DATE
C1068S	RCM-002-12	Basis for the Estimate that 50% of Debris Waste Feedstock Contains Greater Than 100 nCi/g TRU Alpha Activity and 50% Contains Less Than 100 nCi/g TRU Alpha Activity (RCM-002-12)	Randall C. Morris	10/16/2012
C1069A	N/A	Estimated Waste Stream Volumes for Pre-1980 INL-Exhumed SDA wastes, TV-002-12	AMWTP Tim Venneman, AKE	10/24/2012
C107A	MEMO/001/0696	Memorandum to file. "Filters and Insulation Waste Characterization." (MEMO/001/0696)	Jeff Harrison	6/21/1996
C1070A	TV-003-13	ANL-E defense determination evaluation for contact-handled (CH) waste Item Description Codes (IDCs): AE-100, AE-101, AE-102, AE-104, AE-105, AE-106, AE-110, AE-111, AE-120 and AE-121-TV-003-13 (TV-003-13)	Tim Venneman	02/06/2013
C1071S	N/A	AMWTP off-site Coordinator waste receipt information as of October 2012	AMWTP off-site coordinator, Rand Watson	10/22/2012
C1072S	N/A	CCP OSW from ANL-E	AMWTP	10/31/2012
C1073A		Defense related waste – ANL-E wastes ()	AMWTP, Tim Venneman	XXX
C1074A	CBFO:OQA:RU:CC:12-1575:UFC 2300.00	Interim Audit Report for Recertification Audit A-13-01 of the Advanced Mixed Waste Treatment Project (CBFO:OQA:RU:CC:12-1575:UFC 2300.00)	CBFO	11/15/2012
C1075A	N/A	Historic Operations in Building 212, D-Wing	Tom Krause	06/09/2000
C1076A	N/A	Record of Communication; Analytical Chemistry Laboratory Operations and Locations	Tom Krause	07/20/2000
C1077A	N/A	Discussion with Cindy Rock; Waste Management Operations	Tom Krause	07/20/2000
C1078A	N/A	Two D&D Projects in Building 212, D-wing	Tom Krause	07/24/2000
C108A	N/A	Letter to R. E. Yoder from E. Vejvoda. "Tritium Balance for Buildings 771 and 774 Processing"	E. Vejvoda	8/6/1976
C1080A	N/A	Discussion with Seth Snyder and Al Youngs; Chemistry Division operations in Building 200, M-wing and general description of Building 200	Tom Krause	07/27/2000
C1081S	N/A	Waste Stream Worksheets	Gary Lasswell	09/01/2001
C1082A	8407-AGH-001	IFR Fuels Development (8407-AGH-001)	A. G. Hins	07/06/1984
C1083A	AE-C-027	Operations Building 315 (AE-C-027)	Tom Krause	09/28/2001

Implementing Document: MP-TRUW-8.13

TRACKING NUMBER	DOCUMENT NUMBER	DOCUMENT TITLE/DESCRIPTION	DOCUMENT AUTHOR	DOCUMENT DATE
C1084S	2694	Letter to Mr. Hilary Rauch, Manager, U.S. Department of Energy re: "TREAT Experiment Program" (2694)	R. Avery	04/04/1985
C1085A	8711-AGH-03	IFR Fuel Interdiffusion Studies (Dayananda) Test Capsule Evaluation (8711-AGH-03)	Allan Hins	05/13/1988
C1086S	N/A	Intra-Laboratory Memo to C. E. Crouthamel, CMT, and M. J. Steindler, CMT re: LWR Hot-Cell Capability at ANL-E: The 0-200 M-Wing Situation	L. A. Neimark	05/03/1985
C1087S	AE-I-018	Bi-Monthly Report on Cermet Fuels - April/May 1987; Process Integration and Verification (AE-I-018)	H. R. Thresh	06/04/1987
C1088A		Memo from A.G. Hins to IFR Distribution "Diffusion Couple Studies - As Received Materials Structures" with internal report "Metallographic Examination of As-Received Clad and Fuel Materials for IFR Diffusion Studies," by J A Zic ()	A. G. Hins	04/22/1985
C1089A	AE-C-025	Conversation with Dan Hecker: Disposition of drums from Buildings other than 200, 205,212, and 350. (AE-C-025)	Tom Krause	09/18/2000
C109A	N/A	Letter to W. C. Bright, Rocky Flats, from B. L. Kelchner, DOW. "Emission of Carbon Tetrachloride Vapor from Building 774".	B. L. Kelchner	2/5/1971
C1090S	N/A	Correspondence to Mr. E. M. King, Oak Ridge National Laboratory re: Radiactive Waste, i.e., nonrecoverable material, being transferred from ANL to ORNL for storage and/or processing.	L. A. Neimark	04/10/1974
C1091S	AE-I-015	Sequence of Events for Camphor Coating Studies of UN Powder (AE-I-015)	Unknown	05/22/1987
C1093A	N/A	Fissile Scrap Passivation, Activity 41603	A. G. Hins	12/28/1977
C1094S	N/A	Memo to F. Pause he, AGHCF Records Chief re: Fuel Element Sectioning and metallography debris, accounting and criticality safety procedures for disposal.	W. D. Jackson, AGHCF Facility Supervisor,	04/17/1975
C1095S	Ext-3228	ANL Scrap Request 4-NU/EU-8-71-KZ 8-20/70 6-EBR I-Mark III fuel slugs. (1442g U235) (Ext-3228)	Wilton Jackson	06/06/1972
C1098S	RF-C100	Letter to Dr. A. Feldman, re: Disposal of Radioactive Contaminated Wastes from University of Colorado Medical Center (RF-C100)	Idaho National Lab (INL)	03/29/1962
C1099S	RF-C065	Memo to J. D. McKinney re: Non-Radiological Hazards Study (RF-C065)	Idaho National Lab (INL)	01/22/1980

Implementing Document: MP-TRUW-8.13

TRACKING NUMBER	DOCUMENT NUMBER	DOCUMENT TITLE/DESCRIPTION	DOCUMENT AUTHOR	DOCUMENT DATE
C110A	N/A	Personnel interview of Dick Del Pizzo by Herrick & Flack.	Herrick & Flack	1/21/1992
C1100S	ID-C101	Retrieval Area Chemical Evaluation and RCRA Hazards Analysis (ID-C101)	Idaho Cleanup Project	02/24/2011
C1101S	ID-C112	Results of AK Documentation Review and Response to the May 24, 2008 Observer Inquiry Related to Hazardous Waste Numbers Assigned to INL SDA Waste Streams (ID-C112)		07/16/2008
C1102S	RF-C028	Memo to Paul Sentierl re: pre-1970 RFP waste (RF-C028)	Idaho National Lab (INL)	11/07/2002
C1103S	MSL-2507	Letter to J. L. Long, Identification and Thermal Studies of the Residue from Nitric Acid Reaction with Leaded Neoprene Gloves (MSL-2507)		03/30/1973
C1104S	RF-C211	Reactive Chemicals, Building 771. To C. W. Barrick, List of chemicals used in Building 771 (RF-C211)	Idaho National Lab (INL)	09/01/1971
C1105S	RF-C416	Record of Communication, Interview with Ed Vejvoda. Waste Management Practices at Rocky Flats, (RF-C416)		09/27/2004
C1106S	RF-C420	Record of Communication, Interview with Ed Vejvoda, Re: Chemical Disposal in 742-Series Sludge (RF-C420)	CCP	06/09/2008
C1107S	RF-C045	Rod Thomas notes on telephone conversations with Ed Vejvoda, LATA (RF-C045)	CCP,Rod Thomas	6/20/2001
C1108S	RF-C416	Record of Communication, Interview with Ed Vejvoda. Waste Management Practices at Rocky Flats (RF-C416)	CCP	9/27/2004
C1109S	RF-C162	Letter to General Manager, Rocky Flats Plant, re: Rocky Flats Disposal of Colorado School of Mines Research Foundation Waste Materials (RF-C162)		03/27/1964
C111A	N/A	Letter from Lisa A. Leehy, Envirodyne, to Peg Beatty, Weston.	Lisa A Leehy, Envirodyne	1/3/1990

Implementing Document: MP-TRUW-8.13

TRACKING NUMBER	DOCUMENT NUMBER	DOCUMENT TITLE/DESCRIPTION	DOCUMENT AUTHOR	DOCUMENT DATE
C1110S	N/A	Completion of Waste Requisitions for Building 212 D-Wing D&D Waste Drums	Tom Krause	07/12/2000
C1111S	AE-C-043	Correspondence with Dan Hecker regarding TRU waste stream management (AE-C-043)	ANL-E	06/26/2003
C1113S	N/A	Puncturing of Heat-Sealed Bags in Building 212, D-Wing D&D Waste Drums	Tom Krause	07/21/2000
C1114S	N/A	CH TRU waste generation from the AGHCF	Tom Krause	07/26/2000
C1115A	N/A	Chemical Usage at NBL for plutonium and uranium analysis - Conversation with Alma Stitfin and Iris Frank	Tom Krause	09/13/2000
C1116S	ANL-CMTI-9123	Safety Review - Pu Extraction Experiments In G-118 (ANL-CMTI-9123)	ANL-E, Johnson, T. R., Fischer, D.F.,	04/02/1986
C1118S	N/A	Interview and Follow-up Correspondence with Robert Schulten: Packaging of Waste Streams AECHDM-PK and AECHHM-PK	Kevin Peters	05/25/2010
C1119S	ANL.CMTI.9191,	Safety Review of ICP/AEs for Analysis of Radioactive Samples (ANL.CMTI.9191,)	ANL-E, Bowers, D.,Huff, E.	09/08/1986
C112A	N/A	Letter from E.L. D'Amico, Rocky Flats, to Cal Ozaki.	E. L. D'Amico, Rocky Flats	5/6/1988
C1120S	ANI-CMTI-9947	Safety Review Alpha Particle Irradiation of Plastic Materials (ANI-CMTI-9947)	ANL-E, Reed, D. T.. Gerding, T. J.. Seils. C. A	11/02/1989
C1121S	ANL-CMTI-9988	Safety Review of Remote Preparation of Radioactive Glass Samples in the Senior Cave (ANL-CMTI-9988)	ANL-E, Hoh,J.,Gerding. T.	01/16/1990
C1122A	ANL-CMTI-10493	Safety Review for Furnace Demonstration Test in Building 205, G-109 (ANL-CMTI-10493)	ANL-E, M. C., Liebowta, L.. Blomquist, R. A.,	02/13/1992
C1123A	EWM/685	Bagout of Lead from Plutonium Gloveboxes; Building 212 (EWM/685)	ANL-E, L. Cheever,	09/15/1993
C1124S	EWM/673	Minutes of D Wing BUilding 212 Plutonium Gloveboxes D&D Project Team (EWM/673)	ANL-E, C. L. Cheever	09/09/1993
C1125S	CMT50-0118	Safety Review for Unsaturated Testing of Uranium Metal Spent Fuel in Building 205 Senior Cave and K-116 Facilities (CMT50-0118)	ANL-E, Fortner, J.	03/07/2000
C1126S	CMT50.0058.EP	Safety Review of Tests with Samples of Spent Fuel in Building 205, K.104 (Senior Cave) and. in K-116. Sampling of Leachate Solutions from the Tests (CMT50.0058.EP)	ANL-E, Finn, P. A.	03/13/2000

Implementing Document: MP-TRUW-8.13

TRACKING NUMBER	DOCUMENT NUMBER	DOCUMENT TITLE/DESCRIPTION	DOCUMENT AUTHOR	DOCUMENT DATE
C1127S	CMT50-0080-EP	Safety Review for Drip Tests on Radioactive Waste Glass Samples (CMT50-0080-EP)	Argonne National Lab - East (ANL-E), Cunnane, J. C.,	04/03/2000
C1128S	CMT50-0070-EP	PCT Testing of Pu-Containing Glass-Bonded Sodalite in Building 205, Labs G.109 and G.133 (CMT50-0070-EP)	ANL-E, Morss, L. R.	04/14/2000
C1129S	AE.I-096	Temporary Storage of 212 D&D Waste in Bldg 330 (AE.I-096)	ANL-E	1995
C113A	N/A	Interoffice Correspondence from M. T. Saba to S. A. Anderson. "Evaluation of Analytical Data for By-pass Sludge Sampled May 1990."	M. T. Saba	10/3/1990
C1130A	CBFO:NTP:JRS:GL:12-0640:UFC 5900.00	Tier I Request for Materials and Fuel Complex Generated Waste at the Advanced Mixed Waste Treatment Project (CBFO:NTP:JRS:GL:12-0640:UFC 5900.00)	CBFO- DOE	10/01/2012
C1131A	CBFO:NTP:JRS:GL:12-0689:UFC 5900.00CBFO:NTP:JRS:GL	CBFO Responses to the EPA Concerns Raised During the EPA Continued Compliance Inspection at the AMWTP (CBFO:NTP:JRS:GL:12-0689:UFC 5900.00CBFO:NTP:JRS:GL)	CBFO-DOE	12/05/2012
C1132S	AE-I-165	Transfer Request to Building 205 of Waste Pails. (AE-I-165)	ANL-E, D.B. Chamberlain,	03/18/1991
C1133S	IPS-247-00-01	Work Plan for the Preparation of Al-Clad Fuel Specimens for Pacific Northwest National Lab (PNNL) (IPS-247-00-01)	ANL-E, L.A Neimark	04/02/1997
C1134A	AE-I-197	Memo to File RE-Interpretation of P015 Hazardous Waste code Assignment (AE-I-197)	ANL-E, Tom Krause	06/12/2002
C1135S	AE-I-198	Re-Interpretation of Radionuclide Information for Selected Drums (AE-I-198)	ANL-E, Tom Krause	06/14/2002
C1136S	CAO:NTP:MRB 96-2236	Defense Waste Guidance (CAO:NTP:MRB 96-2236)	Don Watkins, Manager National TRU Program	10/09/1996
C1137S	C001	Fax to Larry Neimark re: Defense versus Non-Defense Waste (C001)	ANL-E, Gary Marshall	12/21/1997
C1138S	I PS-230-00-01	Work Plan for the Replacement of the Area III OM Manipulator Power Cord (I PS-230-00-01)	T. S. Bray	07/22/1999
C1139S		Intra-Laboratory Memo to Harvey Welsh re: Dimenions of Intermediate TRU Waste Containers ()	ANL-E, Dennis Donahue	09/14/1989
C114A	MEMO/001/0796	Memorandum to File from Jeff Harrison. Historical Use of IDC 807. July 18, 1996. (MEMO/001/0796)	Documentation produced for INEEL Acceptable Knowledge records.	7/18/1996

Implementing Document: MP-TRUW-8.13

TRACKING NUMBER	DOCUMENT NUMBER	DOCUMENT TITLE/DESCRIPTION	DOCUMENT AUTHOR	DOCUMENT DATE
C1140S	C004	Intra-Laboratory Memo to R. S. Wisner, HFEF re: Estimates of Total AGHCF Inventory for Future Shipments to ANL-W (C004)	A. B. Cohen, Manager, AGHCF	4/25/1994
C1141A	C006	Interview with Larry Neimark re: AGHCF samples, applicable programs, defense relationship to materials, and commingling of waste (C006)	ANL-E, Cheryl Schultz	07/17/2001
C1142S	C007	Correspondence to L. A. Neimark, Manager, IP Section re: Assessment of Nuclear Materials Inventory, Fissile Inventory Records and Handling Procedures in FF12 (C007)	ANL-E, A. G. Hins	03/13/1991
C1143S	C009	Intra-Laboratory Memo to W. D. Jackson, MCT/ANL-E, re: Fissile Scrap and Irradiated Structural Materials Waste Shipments from ANL-E to ANL-W for retrieval be Storage in the RSWF (C009)	ANL-E, L. C. Witbeck	11/17/1988
C1144S	C011	Intra-Laboratory Memo to D. A. Donahue, MCT, re: Work Plan for the Examination of L1LY.1 and LILY.1A Speciments (C011)		
C1145S	C012	Intra-Laboratory Memo to Operations Personnel re: Facility Nitrogen Purge Change and Storage of Flammable Liquids (C012)	ANL-E, D. A. Donahue	04/09/1990
C1146S	C014	Correspondence to A. Cohen re: Process and Procedure with all and WMO for Sampling 1st Stage HEPA Filters. Description-S'xS'x3' wl 5/S' Wood Frame Ultra Aire - MSA (C014)	ANL-E, F. Pausche	04/22/1995
C1147S	8407-AGH-014	Clad/Fuel Diffusion Studies - As Received U-Pu-Zr Materials (8407-AGH-014)	ANL-E, A. G. Hins	06/05/1985
C1148S	8512-AGH-03	SOI Cermet Fuel Fab - Glovebox Facility (8512-AGH-03)	ANL-E, A. G. Hins,	05/29/1986
C1149S	C020	Intra-Laboratory Memo to Environmental Compliance Representatives re: Photo Processing Solutions - Waste Characterization (C020)	ANL-E, R. G. Kolzow, ESH/QA Oversight; J. R. Thuot, PFS/WMO	12/19/1990
C115A	N/A	Telecon between Jeff Harrison and Bill Connor of Kaiser-Hill LATO. "Generation of Americium Process Residue (IDC 241)."	Jeff Harrison	7/29/1996
C1150S	C023	Intra-Laboratory Memo to M. J. Ryan, SEC re: Potentially Hazardous Materials in "Operational Clean Sweep" (C023)	ANL-E, L. MST, A. Neimark	03/21/1983
C1151S	C025	Correspondance to D. A. Donahue re: Transfer of Special Materials from G-118 Glovebox 3 to Building 212 Caves (C025)	ANL-E, M. A. Vest, CMT	09/16/1994

Implementing Document: MP-TRUW-8.13

TRACKING NUMBER	DOCUMENT NUMBER	DOCUMENT TITLE/DESCRIPTION	DOCUMENT AUTHOR	DOCUMENT DATE
C1152S	C026	Laboratory Memo to Melanie Tompkins re: Annual Forecast for Waste Management Operations-94 (C026)	ANL-E, Aubrey C. Smith, Manager, Bldg. 212	08/31/1993
C1153S	C029	Letter re: Survey of Waste Streams in Building 212 (C029)	ANL-E,Noreen Kevin, W. H. Livernash	No date
C1154S	C035	Intra-Laboratory Memo to Distribution re: Management of Broken Fluorescent Lamps (C035)	ANL-E, J. Herman, PFS-WMO	02/02/1999
C1155S	C036	Letter to Sheildon Meyers, Deputy Assistant Secretary for Nuclear Waste Management re: Disposition of TRU from LWR Program: Documentation of Agreements Reached in August 15,1980 Meeting (C036)	ANL-E, Robert H. Bauer, Manager/Regional Representative	09/09/1980
C1156S	C039	Intra-Laboratory Memo to L. A. Neimark re: Procedure for Disposal of "Clean Sweep" Pyrophoric Waste (C039)	ANL-E, W. D. Jackson	09/06/1983
C1157S	C046	Intra-Laboratory Memo to D. C. Parzyck re: DOE request for Information Regarding Materials Not Classified as Waste (C046)	ANL-E, AUBREY C. Smith	03/13/1991
C1158S	C066	Record of Communication with Bill Kettman and Dennis Donahue, AGHCF re: AGHCF Operations and Waste Packaging (C066)	ANL-E, J. Whitworth, M. Wyco	08/07/2001
C116A	N/A	Memorandum to file: "Resolution of Incinerator Waste Characterization Discrepancy."	Jeff Harrison	8/2/1996
C1160S	0	Letter to Mr. Mahlon Heileson, Lockheed Idaho Technologies Company re: Liquids absorbed on pelletized clay are non hazardous (0)	Daniel Pancake	10/16/1995
C1161S	C067	Record of Communication with Fred Pausche and Terry Bray, AGHCF (C067)	ANL-E, J. Whitworth, M. Wyco	08/08/2001
C1162S	C068	Correspondnece to Craig R. Tyler, Lockheed Martin Idaho Technologies Co. re: ANL Transuranic Waste. Definition as Defense Waste (C068)	ANL-E,	04/16/1997
C1163S	0	Intra-Laboratory Memo to Larry Neimark, ET re: Use of Carbon Tetrachloride in Alpha Gamma Hot Cell Facility (AGHCF) Experiments (0)	Judd Johnson	09/02/1994
C1164S	C073	Letter to Ms. Trisha Dedik, Director, International Policy and Analysis Division, NN-42, U.S. Department of Energy re: Transmittal of ANL Quarterly Reports (C073)	ANL-E, Armando Travelli, Manager, RERTR Program	01/15/2001

Implementing Document: MP-TRUW-8.13

TRACKING NUMBER	DOCUMENT NUMBER	DOCUMENT TITLE/DESCRIPTION	DOCUMENT AUTHOR	DOCUMENT DATE
C1165S	AE-I-017	Passivation Report (AE-I-017)	ANL-E, D. R. Schmitt	3/14/1980
C1166S	C082	Fax to Ray Lang, DOE-CH re: ANL-E fuel Pins (C082)	L. A. Neimark	05/20/1993
C1167S	AE-C-005	Discussion with Jim Wescott and Dan McNamee; ANL.E Waste Stream Designations (AE-C-005)	ANL-E, Tom Krause	07/20/2000
C1168S	AE-C-012	Transfer of RERTR Fuel Plates to ANL (AE-C-012)	ANL-E, L. A. Nelmark	03/21/1997
C1169S	AE-C-013	Discussion with Don Graczyk; ACL Facility Descriptions for Bldg 200 (AE-C-013)	ANL-E, Tom Krause	08/18/2000
C117A	N/A	Miscellaneous Correspondence and Draft Correspondence about Pyrochemical Salts.	N/A	1993-1995
C1170S	AE-C-014	WIPPWAC Hotline Response; Item 106: Waste Stream Delineation (AE-C-014)	WIPP, CBFO, DOE/CAO, Rick Chavez,	08/22/2000
C1171S	C088	Correspondance to Mr. W. M. Heileson, Waste Generator Interface, EG&G Idaho, Inc. re: Content of ANL-E RHTRU Drums Stored at INEL (C088)	L. A. Neimark	06/17/1994
C1172S	AE-C-016	Cave Area Description (for Building 200) (AE-C-016)	ANL-E, Tory Steed	08/25/2000
C1173S	AE-C-017	Communication with Terri Bray; Nonmixed RH TRU drums (AE-C-017)	ANL-E, Tom Krause,	09/13/2000
C1174S	C089	Intra-Laboratory Memo to Dennis Donahue, Supervisor/AGHCF re: Waste Management Quality Assurance Surveillance Report No. 93-MCT-03a (C089)	Georgia Anast	03/16/1993
C1175S	AE-C-020	Content of radionuclide solutions - Conversation with Alma Stiffen and Jan Muller (AE-C-020)	ANL-E, Tom Krause	09/15/2000
C1176S	AE-C-021	Asbestos in Drum #27214: Record of Communication, Interviewee is Bob Nelson (AE-C-021)	ANL-E, Tom Krause	08/11/2000
C1177S	C091	Memo documents surveillance of MCT/AGHCF compliance with their procedures for sorting RH-TRU waste and waste can preparation. (C091)	Judd F. Johnson, Mixed Waste Specialist	07/18/1994
C1178S	AE-C-022	Correspondence with Terri Bray re: Chemical Usage in the AGHCF (AE-C-022)		09/21/2000
C1179S	AE-C-023	Interview wl Fred Martino concerning chemicals listed in ACL procedures (AE-C-023)	ANL-E, T. Krause	09/19/2000
C118A	N/A	R&D Activities Generating Sand, Slag, and Crucible (SS&C) Wastes (IDCs 391 and 393)	Jeff Harrison	8/13/1996

Implementing Document: MP-TRUW-8.13

TRACKING NUMBER	DOCUMENT NUMBER	DOCUMENT TITLE/DESCRIPTION	DOCUMENT AUTHOR	DOCUMENT DATE
C1180S	AE-C-024	Miscellaneous Correspondence with Daniel Hecker (AE-C-024)	ANL-E, Gary Lasswell	09/15/2000
C1181S	AE-C-028	Operations that Generated TRU Waste in Building 223 (AE-C-028)	ANL-E, Tom Krause	9/28/2001
C1182S	C092	Intra-Laboratory Memo to J. L. Hooper, DOE (ARG) re: Experimental Fuel Segments in the AGHCF (C092)	L. A. Neimark	06/07/1996
C1183S	AE-C-029	Request for Revised Transuranic Package Transporter (TRUPACT-II) Content (TRUCON) codes from Argonne National Laboratory - East (with 3 attached pages of code descriptions) (AE-C-029)	ANL-E,, C. Rock	04/19/2002
C1184S	AE-C-030	NCR-ANLE-0023-02 (AE-C-030)		02/26/2002
C1185S	AE-C-032	NCR-ANLE-0019-02 (AE-C-032)	ANL-E, William Kimball/Jeanne Elkins	03/18/2002
C1186S	AE-C-035	NCR-ANLE-0074-02 (AE-C-035)	ANL-E. Forrest Martin/Jeanne Elkins	05/02/2002
C1187S		NCR-ANLE-0111-02 ()	ANL-E, Forrest Martin/ Jeanne Elkins	05/30/2002
C1188S	C094	Correspondance to L.Neimark, Materials & Components Technology re: Metallogrphic Samples (C094)	J. E. Battles, Chemical Technology Division and Z. Tomczuk	06/13/1990
C1189S	AE-C-037	NCR-ANLE-011 0-02 (AE-C-037)	ANL-E, Forrest Martin/Jeanne Elkins	05/29/2002
C119A	MEMO/001/0896	Discrepancy Report. "Evolution of the Characterization of Pyrochemical Salts and SS&C." August 14, 1996. (MEMO/001/0896)	Jeff Harrison	8/15/1996
C1190S	AE-C-038	E-mail from Jim Frego to Ben Gutierrez (AE-C-038)	ANL-E, Jim Frego	08/20/2002
C1191S	AE-C-039	E-mail from J. Frego on CH-TRU homogenous drums. (AE-C-039)	ANL-E, Jim Frego	08/07/2002
C1192S	AE-C-042	Interview with Amrit Boparai, Analytical Lab Manager (AE-C-042)	ANL-E, David B Becker	03/19/2003
C1193S	C097	Correspondance to AGHCF, Operational Personnel re: Work Station III Fissile Grinding Waste (C097)	Dennis Donahue, AGHCF Operations Chief	N/A
C1194S	C098	Interview with Cindy Rock (WMO) re: hazardous waste procedures, etc. (C098)	Cheryl Schulz	08/28/2001

Implementing Document: MP-TRUW-8.13

TRACKING NUMBER	DOCUMENT NUMBER	DOCUMENT TITLE/DESCRIPTION	DOCUMENT AUTHOR	DOCUMENT DATE
C1195S	C099	Correspondance to Mr. Dennis Wilkinson, RWMC/SWEP re: TRU Waste at Argonne National Laboratory-East (C099)	J. R. Thuot, Manager, Waste Management	05/17/1990
C1196S	C103	Intra-Laboratory Memo to C. A. DeLorenzo, OOS re: Safety Analysis for Handling Tritium containing Compounds in the AGHCF (C103)	L. A. Neimark	05/30/1984
C1197S	C130	Intra-Laboratory Memo to Waste Handling Procedures Manual Holders re: Packaging of Intermediate Level* Radioactive Waste for Disposal (Liquids) (C130)	ANL-E, C. L. Cheever	9/121979
C1198S	C131	Record of Communication with Larry Neimark, AGHCF re: Apparent discrepancies in the batch codes assigned to various elements as reported in different databases (C131)	ANL-E, M. Wyco	02/12/2002
C1199S	C133	Intra-Laboratory Memo to Division DirectorsIDepartment Heads re: Potentially Unstable Chemicals (C133)	ANL-E, R. A. Wynveen	43/15/1991
C120A	N/A	Telecon between Jeff Harrison and Bill Connor of Kaiser-Hill LATO. "Grit Blasting in Building 771."	Jeff Harrison	8/15/1996
C1200S	C136	Intra-Laboratory Memo to Distribution re: Responsibility for Waste Disposal (C136)	ANL-E, J. R. Blauser	09/18/1980
C1201S	C137	Email to Douglas W. Parker re: RH TRU Waste (C137)	ANL-E, Julia Whitworth	03/06/2002
C1202S	C138	Memo to distribution re: hot cell survey (C138)	ANL-E, L.A. Neimark	08/20/1973
C1203S	C143	FAX to Cheryl Schulz re: Information on AGHCF Mercury Vapor Lamps and Lighting Fixtures (C143)	ANL-E, Geneine Staymates	03/10/2003
C1204S	C144	Record of Communication with Curtis Merks re: Specifications for filter vents used on ANL-E drums and bags (C144)	ANL-E, Cheryl Schulz	03/10/2003
C1205S	C106	Email to Whitworth, Julia re: Exploding Drum at ANL (C106)	Terri S Bray	08/30/2001
C1206S	C147	Additional Information to Complete Actions Associated with Preexisting Condition (PEC) 316 - Argonne National Laboratory-East (C147)	ANL-E, Edward J. Ziemianski	04/09/2003
C1207S	C148	Interview of Terri Bray, ANL-E AGHCF Manager re: Lead Solder and First Stage HEPA Filters (C148)	ANL-E, Cheryl Schulz,	09/01/2001
C1208S	C152	Intra-Laboratory Memo to D.A. Donahue, MCTIIPS re: Work Plan for the Examination of LILAC Target No.19 for Battelle Pacific Northwest Laboratories (C152)	ANL-E,	05/03/1991

Implementing Document: MP-TRUW-8.13

TRACKING NUMBER	DOCUMENT NUMBER	DOCUMENT TITLE/DESCRIPTION	DOCUMENT AUTHOR	DOCUMENT DATE
C1209S		Correspondance to Mr. J. T. Case, U.S. Department of Energy, Idaho Field Office re: Strategy Plan for Long-term Management and Storage of Remote-handled (RH) Transuranic (TRU) Waste - TLC-224-92 ()	T. L. Clements,Jr., Manager Transuranic Waste Programs	11/30/1992
C121A	N/A	Telecon between Jeff Harrison and Carrie Wesley, RMRS. "Information on Building 374 Aqueous Waste Treatment."	Jeff Harrison	9/12/1996
C1210S	C155	Work Plan for the Preparation of Specimens for NPR Tests MA-2, -3, and -4 (C155)	ANL-E, L.A. Neimark	09/20/1990
C1211S	C157	Test Specification and Operating Procedure for NPR tests ALCL-1 and -2 (C157)	ANL-E, Terri Shearer	05/29/1991
C1212S	C158	ANL-E EPA Air Pollution control Permit application (C158)	EPA/ANL-E D.C. Parzyck	10/22/1990
C1213S		Intra-Laboratory Memo to W. H. Kline, Waste Management Coordinator re: Waste Packaging Criteria, Transuranic Waste, Idaho National Engineering Laboratory ()	W.D. Jackson, Alpha-Gamma Hot Cell Facility, Supervisor	11/01/1979
C1214S	C160	Fax Memo to Mahlon Heileson, LITCO/RWMC re: Underlying Hazardous Constituents Waste Stream ANL212951004T (C160)	ANL-E, Judd Johnson	11/20/1995
C1215S	C2002	Memo from Timothy S. Crawford to Dr. Frank Y. Fradin regarding the Safety Analysis Report (SAR) Revision 02 and Technical Safety Requirements (TSRs) Revision 01 for the Argonne National Laboratory - East (ANL-E) Building 205 G (C2002)		
C1216S	C2003	SAR for ANL-E Building 205 G-Wing and K-Wing Laboratories (C2003)	ANL-E, Robert C. Wunderlich	01/23/2003
C1217S	C2004	SAR for Uranium Metal Spent Fuel in Bldg. 205 Senior Cave and K-116 Facilities (C2004)	ANL-E, R. D. Wolson	03/07/2009
C1218S	C2005	SAR spent fuel in Bld 205, K-104 (senior cave) and K-116 (C2005)	ANL-E, P.A. FINN	03/13/2000
C1219S	C2006	Work Plan for the Preparation of Unirradiated Al-clad Specimens for CMT (C2006)	ANL-E, T. S. Bray	12/02/1999
C122A	N/A	Memorandum to A. M. Faucette, SafeSites, from Y. B. Mazza and D. L. Remmington, Safe Sites. "Analysis of Cemented Bypass Sludge Samples for TCLP Extract Elements by ICP AES and GC/MS."	Y. B. Mazza and D. L. Remmington	9/12/1995

Implementing Document: MP-TRUW-8.13

TRACKING NUMBER	DOCUMENT NUMBER	DOCUMENT TITLE/DESCRIPTION	DOCUMENT AUTHOR	DOCUMENT DATE
C1220S	C2008	Interview of D. Pancake, D. Hodge, J, Emery, L. Maggos, and J. Mackin regarding Waste Handling practices, use of chemicals, time periods of waste generation for K-Wing hot cells, Bldg.20S (C2008)	ANL-E, Kevin Peters,	09/18/2009
C1221S	C2009	Communication from Laura E. Maggos to Judith Stewart regarding 205 K-Wing • contactor cleaning solutions (C2009)	ANL-E, Laura E. Maggos	08/12/2009
C1222S	C3002	Evaluation of Waste Material Parameter Weights for Waste Streams AECHDM-PK and AECHHM-PK (C3002)	ANL-E, Kevin Peters	03/23/2011
C1223S	C301	Memo from T. Bray to Dcoument File: Shipment of EBR-II Fuel to ANL-W (C301)	ANL-E, T. S. Bray	9/15/2004
C1224S	C302	Memo from L. A. Neimark to Distrubution. Subject: Revision 1 to the Work Plan for the Preparation of Fuel Rods for Return Shipment to Idaho, HFS-015 -00-00, December 8, 2004 (C302)	ANL-E, L. A. Neimark	12/09/2004
C1225S	C303	ANL-E Change postings in to Areas I, III, IV to reconcile books to SPM - attached logbooks for Area J FGE, and Area III FGE (C303)	ANL-E	10/21/1994
C1226S	C304	Memo from T. S. Bray to 00 Holders. Subject: New Pu Equivalent Mass Limits for Area IV (C304)	ANL-E,T. S. Bray	02/22/2000
C1227S	C305	ANL-E Memo from R. J. Page and A. Miron to T. S. Bray. Subject: Inventory and Dose Estimates for Radionuclides Stored in the Alpha-Gamma Hot Cells Facility. (C305)	ANL-E	05/02/2003
C1228S	C314	ANL-E Memo from M. C. Billone to Irradiation Performance Section. Subject: Deletions for the AGHCF Operations Manual (EBI Documents) (C314)	ANL-E M. C. Billone	10/28/2003
C1229S	C315	ANL-E Memo from M. C. Billone to Irradiation Peñormance Section. Subject: Deletions for the AGHCF Operations Manual (PROG documents) (C315)	AN;-E, M. C. Billone	10/28/2003
C123A	N/A	Telecon between Jeff Harrison and Bud Nannie, Rocky Flats Plant-retired. "Use of Carbon Tetrachloride and 1,1,1-Trichloroethane in Pyrochemical Operations."	Jeff Harrison	9/19/1996
C1230S		Memo from Omesh Chopra to Distribution. Subject: Laboratory ALARA Committee Review of the Work Plan for Unloading and Transferring Irradiated Stainless Steel Mechanical Test Specimens. ()	Chopra, Omesh	05/15/2000

Implementing Document: MP-TRUW-8.13

TRACKING NUMBER	DOCUMENT NUMBER	DOCUMENT TITLE/DESCRIPTION	DOCUMENT AUTHOR	DOCUMENT DATE
C1231S		Memo from Carlos Martinez to Nick Harmon. Subject: Limerick Decay Heat and Activity Level ()	Martinez,Carlos	11/03/1998
C1232S		Memorandum to CCP Central Records: Evaluation of FFTF Fuel History and Defense Experiments ()	K. J. Peters	04/24/2004
C1233S		Memorandum to Ines Triay, Acting Manager, CBFO: Determination and Findings, Defense Origin of Nuclear Waste, Kerr-McGee Waste ()	F. Marcinowski	04/15/2005
C1234S		Memorandum to CCP Central Records: Evaluation of Kerr-McGee Fuel FFTF History Production and FFTF History ()	K. J. Peters	06/28/2004
C1235S		Memorandum to CCP Central Records: Assessment of Waste Material Parameters for Waste Stream ID-ANLE-S5000 ()	B. Becker	01/03/2006
C1236S	C353	Discussions with Seth Snyder and Al Youngs; Chemistry Division Operations in Building 200, M-Wing and General Description of Building 200 (C353)	ANL-E, Tom Krause,	07/27/2000
C1237S	C354	Miscellaneous Cave Area Description (for Building 200) from Tory Steed (C354)	ANL-E	08/25/2000
C1238S	C356	Letter to C.E. Johnson; Monthly Report on EXXONIEPRI Program RP 306 for November 1978 (C356)	ANL-E, L.A. Neimark,	12/12/1978
C1239S	C357	Letter to N.D. Dudey and C.E. Crouthamel (EXXON); Management Summary and Milestone Report for October 1978 (C357)	ANL-E, C.E. Johnson	11/01/1978
C124A	ALS-328-91	Interoffice Correspondence from A.L. Schubert to Distribution. "Management of Spent Fluorescent Light Tubes." (ALS-328-91)	A. L. Schubert	10/8/1994
C1240S	C375	Intra-Laboratory Memo; Minutes of September 9,1980 about Sb-125 Releases From Cell K-2, M-Wing, Building 200 (C375)	ANL-E, R.H. Cooke	09/12/1980
C1241S	C382	Email to K. Peters Regarding ANL Rigid Liner Thickness (C382)	ANL-E, F. W. Root	05/08/2008
C1242S		Memo to CCP Central Records: Assessmentof Waste material Parameters (WMPs) for Waste Stream AERHDM ()	D. B. Becker	01/01/2006
C1243S	C812	Memo from T. S. Bray & R. V. Strain to M. Goldberg re: Characterization of N -Reactor Fuel Samples (C812)	ANL-E, T.S. BRAY	10/04/2000
C1244S		CCP Review Comments and Resolutions for Draft A, Rev. 0, CCP-AK-ANLE-500 ()	K. Peters and S.Schafer	02/27/2006

Implementing Document: MP-TRUW-8.13

TRACKING NUMBER	DOCUMENT NUMBER	DOCUMENT TITLE/DESCRIPTION	DOCUMENT AUTHOR	DOCUMENT DATE
C1245S		Shaw Discrepancy Report R1 for IN EEL RH. TRU Waste from ANL-E-AGHCF Re: Defense Relationship ()	Julia Whitworth	08/13/2001
C1247S		Shaw Discrepancy Report R4 - RH TRU Waste from ANL-E- AGHCF Re: Possible Presence of Lead in Waste ()	Cheryl Shulz	07/15/2003
C1249S		Shaw Discrepancy Report R7 for RH TRU Waste from ANL-E- AGHCF Re: Waste Generated in K-Cells ()	Cheryl Shulz	07/15/2003
C125A	JAH-009-95	Interoffice Correspondence from John Hill, Kaiser Hill, LLC Rocky Flats to Distribution: "Environmental Compliance Directive No. 1: Spent Incandescent Bulbs to be Collected for Recycling." (JAH-009-95)	John Hill, Kaiser Hill	8/4/1995
C1251S		Radiological Evaluation for Waste Stream AERH ()	S. Schafer	08/03/2006
C1253S		Evaluation for Radiological Waste Stream Delineation for Waste Stream ID-ANLE-S5000 ()	K. Peters	09/01/2006
C1255S		Fax to M. Heileson re: Pelletized Clay ()	Judd Johnson	11/20/1995
C1256S		Intra-Laboratory Memo to A. C. Smith, PFS re: Chemical Forms in AGHCF Transuranic Wastes ()	L. A. Neimark	04/12/1989
C1257S		Fax to Mark Wyco and Larry Neimark, ANL-E re: Request for ANL-E to Identify Items of ANL- W Origin ()	Julia Whitworth	02/21/2002
C1258S		Intra-Laboratory Memo to Steve Gehl, MSD re: Burnup on LWR Samples ()	E. R. Ebersole	10/22/1975
C1259S		Fax to C. Schulz re: Radiological Health Handbook ()	Raj Bhatt	07/09/2003
C126A	N/A	Battery Characterization. Attachment 8 - Mercury Batteries.	Unknown	11/12/1996
C1260S		Intra.Laboratory Memo to Distribution re: Revised Procedure for Determining Specimen Density by Immersion, Operations Manual Section 7.21 ()	L. A. Neimark	03/13/2013
C1261S		Letter to W. E. Bergholz, DOE-Idaho Operations Office, Argonne National Laboratory-East(ANL-E) Remote Handled (RH) Transuranic Waste Stored at the Radioactive Waste Management Complex (RWMC) ()	R.C..Wumderlich,	03/20/2003
C1262S	IPS-417-00-00,	Memorandum From H. Drucker to H. Grunder, Director Management Plan for Irradiation Performance Section Facilities, Energy Technology Division. (IPS-417-00-00,)	ANL-E	10/14/2002

Implementing Document: MP-TRUW-8.13

TRACKING NUMBER	DOCUMENT NUMBER	DOCUMENT TITLE/DESCRIPTION	DOCUMENT AUTHOR	DOCUMENT DATE
C1263S	IPS-424-00-00	Memo to file: Functional Requirements for Hydrogen-Charged Materials to be Used as Standards for Hydrogen Content Determination (IPS-424-00-00)	ANL-E, Robert Daum	01/22/2003
C1264S	IPS-428-00-00 and IPS-42S-00-01	Memorandum: Work Plan for Determining the Effectiveness of Defueling a Short Cladding Segment from High Burnup In-cell LOCA Test Sample ICL#2 in Room-Temperature Nitric Acid Supplemental Instructions for Rod/Specimen A1G547C1A1D, 1"-long fuel (IPS-428-00-00 and IPS-42S-00-01)	ANL-E, Y. Yan	08/06/2003
C1265S	IPS-429-00-00 and IPS-429-00-01	Procedure for Thinning Gauge Sections of Tensile Specimens after Tensile Tests (IPS-429-00-00 and IPS-429-00-01)	ANL-E, Hanchung Tsai,	08/14/2003
C1266S	IPS-432-00-00	Feasibility Study for Defueling Irradiated Cladding Using Non-Volatile Methods (IPS-432-00-00)	ANL-E, Robert Daum	12/02/2003
C1267S	IPS-434-00-00	memo to distribution. Work Plan for Preparation of Samples for LECO Hydrogen or Oxygen Analysis (IPS-434-00-00)	ANL-E, T. Burtseva,	10/16/2003
C1268S	P366	Operations Order on the Collection of Cutting Swart (P366)	ANL-E, Adam Cohen	12/01/1994
C1269S	P503	Memo to IPS Document File-Work Plan for Microstructural Examination on V-4Cr-4Ti Rods (P503)	ANL-E, Yong Yan	11/4/1999
C127A	N/A	Telecon between Norm Cypher of RMRS-Rocky Flats and Ann Quinn. "Aggregate Feed Streams to Building 374 Treatment processes."	Norm Cypher	11/13/1996
C1270S	IPS-328·00·DD	Memo to NRC Program File-Work Plan for the LOCA Mock·up • Phase 1 (IPS-328·00·DD)	ANL-E, R. V. Strain	11/23/1999
C1271S	P515	Memo to IPS Document File-Work Plan for Determing Hydrogen Contents in TMI-1 Cladding (P515)	ANL-E, Hanchung, Tsai,	02/03/2000
C1272S	P516	Memo to IPS Document File-Replacement of the WPF Furnace (P516)	ANL-E, Hanchung Tsai	10/20/1999
C1273S	P518	Memo to NRC Program File- Work Plan for the Steam Oxidation Tests at 1200 degrees on Unirradiated Zry-4 and Irradiated TMI-1 Cladding (P518)	ANL-E, Y. Van	02/11/2000
C1274S	P519	Memo to IPS Document File-Work Plan for cutting Limerick Rod Sections and Loading into Shipping Tubes (P519)	ANL-E, Hanchung Tsai	01/24/2000

Implementing Document: MP-TRUW-8.13

TRACKING NUMBER	DOCUMENT NUMBER	DOCUMENT TITLE/DESCRIPTION	DOCUMENT AUTHOR	DOCUMENT DATE
C1275S	N/A	Document request- E-mail correspondence from D. Harr to T. Venneman	AMWTP	01/21/2013
C1276A	TV-002-13	Advanced Mixed Waste Treatment Project Defense Determination Evaluation for Materials and Fuels Complex Debris Wastes Proposed for Inclusion into the Supercompactor Feedstock (i.e., BN-508) (TV-002-13)	Tim Venneman	01/30/2013
C1277A	TV-003-13	Advanced Mixed Waste Treatment Project Defense Determination Evaluation for Argonne National Laboratory-East Debris Wastes Proposed for Inclusion into the Supercompactor Feedstock (i.e., BN-508) (TV-003-13)	AMWTP	02/06/2013
C1278A	TV-004-13	Memo to File WMP calculations BN510.1 (TV-004-13)	AMWTP	03/19/2013
C1279A	N/A	CBFO DRRs (comment resolution) for BN510.1 change notice #3	AMWTP	various
C128A	N/A	Telecon between Paul Pigion of RTG and Ann Quinn. "Permit Status and LDR Requirements for Building 374."	Paul Pigion	11/13/1996
C1280A	13-0438	BN510.1 Change Notice #3 approval letter and submitted change notice (13-0438)	CBFO Jose R. Franco	02/26/2013
C1281A	C-2013·0063	Conctract No. DE·EMOOO1467, Carlsbad Field Office responses to the EPA Concerns Raised During the EPA Continued Compliance Inspection at the AMWTP-DHH-04-13 (C-2013·0063)	ITG, Harr	02/21/2013
C1282S	N/A	AMWTP TSA-RE cell open and cell closure dates	AMWTP, Randy Morris	No date
C1283A	DWR-01-93	Evaluation of Records for Waste Generated at the Idaho Chemical Processing Plant (ICPP) and Disposed at the Radioactive Waste Management Complex (RWMC) during the Period of 1960-1983 (DWR-01-93)	D.W. Rhodes	01/08/1993
C1284A	EPA Docket No. A-98-49: II-A4-169	Waste Characterization Tier 1 Change Report, Addition Of Contact-Handled Transuranic Waste To The Advanced Mixed Waste Treatment Project Approved Program: S3000 And S5000 Waste From Argonne National Laboratory-East AND S5000 Waste From Idaho National Laboratory Materials And Fuels Complex (EPA Docket No. A-98-49: II-A4-169)	U.S. Environmental Protection Agency	01/20/2013

Implementing Document: MP-TRUW-8.13

TRACKING NUMBER	DOCUMENT NUMBER	DOCUMENT TITLE/DESCRIPTION	DOCUMENT AUTHOR	DOCUMENT DATE
C1285A	CBFO:NTP:JRS:PG:13-0458:UFC 5900.00	AMWTP Project Expansion to Recertification Audit A-12-03 to Include the EPA Tier 1 Approvals Adding ANL-E and MFC Waste and Surveillance S-13-21 AMWTP Compacted Waste Process for CH SCG S5000 Debris Waste (CBFO:NTP:JRS:PG:13-0458:UFC 5900.00)	CBFO, Jose R. Franco	04/12/2013
C1286S	NA	Interview of John Baker, RTC Radiological Laboratories, re: Alpha and Radiochemistry Laboratory Operations, with attachments. (NA)	Scott Smith and Mike Papp	05/31/2007
C1287S	NA	Email from John J. Miller to Brett Welty "TRA Hot Cell Questions" (NA)	John J. Miller	02/02/2005
C1288S	NA	Interview with Richard S. Cain (RTC Hot Cell Facility), Tony Jones (Hot Cell Operator), John C. Martin (DOE Idaho), Steven K. McClaskey (CWI WGS), and Todd Morris (Manipulator Operator), re: RTC Hot Cell Facility Operations, with attachments (NA)	Scott Smith and Mike Papp	07/26/2007
C129A	ER-95-195	Informal memorandum from Jack Templeton of SAIC to Briand WU and others. Evaluation of ITS Water and Recommended Discharge Options. (ER -95-195)	Jack Templeton, SAIC	10/6/1995
C1290S	N/A	Disposition of Non-Fuel Bearing Components from the Dry Rod Consolidation Technology (DRCT) Project	Norman D. Rohrig	06/01/1995
C1291S	TLB-29-92	Interoffice Correspondence to A. M. Sorce, re: Evaluation for Continued Iridium Processing in TRA Hot Cell #3 (TLB-29-92)	T.L. Bacchus	06/05/1992
C1292S	NA	Email from Dale Wells to Geneine Staymates and Karen Taylor, INEEL, "CF-690 vs. CF-646" (NA)	Dale Wells	04/20/2005
C1293S	NR: IBO-04/098	Letter to J. G. Snook, U.S. Department of Energy. Subject: Assessment of Six Waste Shipments from NRF to Pit #4 at the RWMC (NR: IBO-04/098)	W. R. Dixon, Naval Reactors Idaho Branch Office	07/08/2004
C1294S	NA	Interview of John D. Baker, Dave Meikrantz, and Wayne Olsen, re: INTEC Actinide Separation Process and Waste Management Information (NA)	Scott Smith and Carrie Johnson	04/17/2008
C1295S	NA	Interview of Mike Huyck re: Management of Sodium Bonding and Target Materials (NA)	Michael Papp	09/27/2007
C1296A	Multiple Correspondence Numbers	CPP Production Monthly Reports (December 27,1965 through December 30, 1966) (Multiple Correspondence Numbers)	A. L. Ayers	Multiple
C1297S	Zim-7-65A	InterOffice Correspondence to K. L. Rohde, re.: Decontamination of WAPD L-12/M-13 Loop (Zim-7-65A)	C.A. Zimmerman	04/07/1965

Implementing Document: MP-TRUW-8.13

TRACKING NUMBER	DOCUMENT NUMBER	DOCUMENT TITLE/DESCRIPTION	DOCUMENT AUTHOR	DOCUMENT DATE
C1298S	DOE-WD-2006-001	Section 3116 Determination for the Idaho Nuclear Technology and Engineering Center Tank Farm Facility at the Idaho National Laboratory (DOE-WD-2006-001)	Samuel W. Bodman	11/19/2006
C1299S	TV-XXXXXX	Defense/non-defense and WIPP Land Withdrawal Act Evaluation for Pre-1980 INL-Exhumed Subsurface Disposal Area Wastes (TV-XXXXXX)	AMWTP	XXX
C130A	RWMC-TWCP-1371	Fax to Jeff Paynter. Rocky Flats Plutonium Isotopic Levels. (RWMC-TWCP-1371)	Steve Cunningham, Rocky Flats	2/18/1992
C1300A	CBFO:NTP:MP:GL13-0453:UFC 5822.00	Desktop Surveillance of the AMWTP Compacted Waste at the INL (CBFO:NTP:MP:GL13-0453:UFC 5822.00)	J.R. Stroble	03/07/2013
C1301A	C-2013-0063	Contract No. DE-EM0001467, CBFO Responses to the EPA Concerns Raised During the EPA Continued Compliance Inspection at the AMWTP-DHH-04-13 (C-2013-0063)	AMWTP, Dave Haar	02/21/2013
C1302A	CBFO:NPT:JRS:PG:13-0580:UFC 5900.00	Tier I Request for Los Alamos National Laboratory Debris Waste at the Advanced Mixed Waste Treatment Project (CBFO:NPT:JRS:PG:13-0580:UFC 5900.00)	J.R. Stroble	05/30/2013
C1303S	N/A	MLLW e-mail: RCRA Waste Codes for NNSS HDPE Macroencapsulation Debris Profile-	AMWTP MLLW Program	06/07/2013
C1304A	CBFO:OQA:DSM:MAG:13-1431 :UFC 2300.00	Recent Changes to the WIPP HWFP and the Performance of Recertification Audits (CBFO:OQA:DSM:MAG:13-1431 :UFC 2300.00)	CBFO	05/30/2013
C1306A	A-98-49; II-A4-174	WASTE CHARACTERIZATION TIER 1 CHANGE REPORT:ADDITION OF CONTACT-HANDLED TRANSURANIC WASTE TO THE ADVANCED MIXED WASTE TREATMENT PROJECT APPROVED PROGRAM: PRE-1980 INL-EXHUMED SUBSURFACE DISPOSAL AREA SUMMARY CATEGORY GROUP S3000 AND S5000 WASTE (A-98-49; II-A4-174)	EPA	05/01/2013
C1307A	N/A	EPA Tier approval letter for RPT-TRUW-91 SDA.	US EPA Director, Tom Peake	07/09/2013
C1308A	SPC-013-13	Bettis Debris Waste as Mixed Low-Level Waste Feedstock to the Supercompactor – SPC-013-13 (SPC-013-13)	Steve Carpenter, Acceptable Knowledge/Site Project Manager	07/18/2013
C1309A	N/A	LANL TWSR generator packaging documentation	LANL	variable

Implementing Document: MP-TRUW-8.13

TRACKING NUMBER	DOCUMENT NUMBER	DOCUMENT TITLE/DESCRIPTION	DOCUMENT AUTHOR	DOCUMENT DATE
C131A	774-10	Telecon between Andy Ledford, RMRS-Rocky Flats and Ann Quinn, "WSRIC Building Book 774 Upcoming Changes, Microwave Process (774-10)." (774-10)	Andy Ledford	1/15/1997
C1310A	TV-006-13	Defense/Non-Defense and Waste Isolation Pilot Plant Land Withdrawal Act Evaluation for Pre-1980 Idaho National Land Exhumed Subsurface Disposal Area Wastes Memorandum Correction – TV-006-13 (TV-006-13)	AMWTP	07/31/2013
C1311A	EPA Docket No. A-98-49; II-A4-143	Waste Characterization Inspection Report for EPA Unannounced Continued Compliance Inspection No. EPA-AMWTP-CH-UA-10.10.24 of the Contact-Handled Waste Characterization Program at the Advanced Mixed Waste Treatment Project. November 17-18, 2010. (EPA Docket No. A-98-49; II-A4-143)	U.S. Environmental Protection Agency, Office of Radiation and Indoor Air Center for Waste Management and Regulations	03/01/2011
C1312A	CBFO:OQA:MPN:MAG:13-1427:UFC 2300.00	Transmittal of the Recertication Audit Report for the AMWTP, Audit A-13-01 (CBFO:OQA:MPN:MAG:13-1427:UFC 2300.00)	Jose R. Franco	07/31/2013
C1313A	TV-010-13	Defense/non-defense and WIPP Land Withdrawal Act Evaluation for Los Alamos National Laboratory (LANL) debris wastes. TV-010-13 (TV-010-13)	AMWTP	10/16/2013
C1314A	CBFO: NTP: JRS: PG: 13-0656: UFC 5900.00	AMWTP Project Expansion to Recertification Audit A-12-03 to Include the EPA Tier 1 Approvals for the addition of the Pre-1980 INL-Exhumed SDA CH Wastes from SCGs S3000 and S5000 to the BN-510 Waste Stream (Document includes Attachment 1). (CBFO: NTP: JRS: PG: 13-0656: UFC 5900.00)	CBFO	08/08/2013
C1316A	CBFO:OQA:MPN:MAG:13-1427:UFC 2300.00	Transmittal of the Recertification Audit Report for the AMWTP, Audit A-13-01 (CBFO:OQA:MPN:MAG:13-1427:UFC 2300.00)	Jose R. Franco	07/31/2013
C1317S	N/A	E-mail correspondence from LANL personnel to AMWTP, August 27, 2013.	LANL	08/27/2013
C1318A	N/A	E-mail from Mike Romero addressing Waste codes for CMBs with aerosol cans and D001/D003 HWN applicabity.	LANL	08/27/2013
C1319S	Form 1906	Form 1906, Non-AMWTP Waste Profile Environmental Checklist for Profile I.D. LA-MHD01.001. (Form 1906)	AMWTP ES&H	07/30/2013
C132A	N/A	Telecon between Karlan Richards, RMRS-Rocky Flats and Ann Quinn. "WSRIC Building Book 774 Upcoming Changes."`	Karlan Richards	1/13/1977
C1320S	Form 1906	Form 1906, Non-AMWTP Waste Profile Environmental Checklist for Profile I.D. LA-MHD09.001 (Form 1906)	AMWTP ES&H	07/30/2013

Implementing Document: MP-TRUW-8.13

TRACKING NUMBER	DOCUMENT NUMBER	DOCUMENT TITLE/DESCRIPTION	DOCUMENT AUTHOR	DOCUMENT DATE
C1321S	Form 1906	Form 1906, Non-AMWTP Waste Profile Environmental Checklist for Profile I.D. LA-MHD04.001 (Form 1906)	AMWTP ES&H	07/30/2013
C1322A	N/A	Bettis Waste	AMWTP	07/10/2013
C1323A	JAV-001-13	BN510.3 Waste Volume Estimates for Los Alamos National Laboratory Inclusion into the Supercompacted Debris Waste Stream – JAV-011-13 (JAV-001-13)	Joe Velasquez	12/02/2013
C1324A	CBFO:NTP:JRS:GL: 13-0724:UFC 5900.00	Review of Advanced Mixed Waste Treatment Project Waste Stream Profile Form Number BN510.2, Supercompacted Debris Waste (CBFO:NTP:JRS:GL: 13-0724:UFC 5900.00)	J.R. Stroble	09/09/2013
C1325A	TV-009-13	WMPs for BN510.3 (TV-009-13)	AMWTP	09/30/2011
C1326A	A-98-49; II-A4-178	WASTE CHARACTERIZATION TIER 1 CHANGE REPORT: Addition of Contact-Handled Transuranic Waste to the Advanced Mixed Waste Treatment Project Approved Program: Los Alamos National Laboratory Debris Waste. (A-98-49; II-A4-178)	EPA	09/01/2013
C1327A	N/A	EPA Tier 1 approval letter for LANL debris waste as supercompactor feedstock	EPA	09/16/2013
C1328S	N/A	E-mail correspondence from AMWTP Production Planning.	AMWTP Production Planning	09/19/2013
C1329S	TV-008-13	Waste Volume Estimates BN510.3 Supercompacted Debris Waste Stream (TV-008-13)	AMWTP	09/30/2013
C133A	N/A	Telecon between Jim Hahn of Rocky Flats and Jeff Harrison. "Mercury Contaminated Combustibles from Building 125."	Jim Hahn	1/28/1997
C1330A	N/A	Waste Packaging description of LANL CMBs	Mike Romero	09/25/2013
C1331S	TV-010-13	Defense/Non-Defense and Waste Isolation Pilot Plant Land Withdrawal Act Evaluation for Los Alamos National Laboratory Debris Waste (TV-010-13)	AMWTP	10/16/2013
C1332A	CBFO:NTP:JRS:GL:13-0789:UFC 5900.00	Review of Advanced Mixes Waste Treatment Project Waste Stream Profile Form Number BN510.3, Supercompacted Debris Waste (CBFO:NTP:JRS:GL:13-0789:UFC 5900.00)	J. R. Stroble, Director, Office of the National TRU Program	11/27/2013
C1334A	TV-012-13	Waste material parameter evaluation for inclusion of LANL debris into the BN510.3 Supercompacted Debris Waste Stream – TV-012-13 (TV-012-13)	Tim Venneman	12/02/2013

Implementing Document: MP-TRUW-8.13

TRACKING NUMBER	DOCUMENT NUMBER	DOCUMENT TITLE/DESCRIPTION	DOCUMENT AUTHOR	DOCUMENT DATE
C1335A	CBFO:OQA:MN:CC:13-2308:UFC 2300.00	Transmittal of the Final Audit Report for Recertification Audit A-14-01 of the Advanced Mixed Waste Treatment Project (CBFO:OQA:MN:CC:13-2308:UFC 2300.00)	Jose R. Franco	12/09/2013
C1337S	N/A	E-mail correspondence, Estimated BN-600 waste volume shipped off-site as of 12/16/13	AMWTP	12/16/2013
C1338S	SDCR 2938	Create new offsite waste profile and IDC (SDCR 2938)	TestTrack Pro SDCR Database (Sue Sampson)	10/23/2013
C1339S	N/A	E-mail Correspondece, AMWTP; Re: HWNs for CWI/MFC leaded gloves	AMWTP	12/19/2013
C134A	N/A	Interview Record and associated documentation of several former Rocky Flats employees. Not dated.	N/A	N/A
C1340A	A-13-01	New Mexico (NMED) APPROVAL OF THE ADVANCED MIXED WASTE TREATMENT PROJECT FINAL AUDIT REPORT AUDIT A-13-01; WASTE ISOLATION PILOT PLANT; EPA I.D. NUMBER NM4890139088 (A-13-01)	John E. Kieling	09/10/2013
C1341A	TV-002-14	Waste Volume Estimate Update for the Proposed BN600.1 WMF-676 Polychlorinated biphenyl Contaminated Debris Waste Stream Profile – TV-002-14 (TV-002-14)	AMWTP	01/23/2014
C1342A	RCM-002-14	Waste Material Parameter Weights per Unit of Waste Calculations for the BN600.1 WMF-676 PCB Contaminated Debris (RCM-002-14)	Randall C. Morris	01/23/2014
C1343A	RJG:ds 12/17/01	Interoffice Memo - History of Actinide Waste in 55 Gallon Drum (RJG:ds 12/17/01)	INEEL, Robert J. Gehrke	12/17/2001
C1344A	C-2014-0041	Contract No. DE-EM0001467, Acceptance Notification for Idaho Cleanup Project Waste Profile ID-ICP-MFC-Gloves - DHH-01014 (C-2014-0041)	Dave H. Harr	01/27/2014
C1345A	BJM -15-91	TRU DRUM AT MTR HP VAULT - BJM-15-91 (BJM -15-91)	B.J. Mincher	05/10/1991
C1346A	A-14-01	Advanced Mixed Waste Treatment Project Final Audit Report - Recertification Audit A-14-01 (A-14-01)	State of New Mexico	01/27/2014
C1347A	TGOPS0000826	Tailgate (tail gate) training for FOI-16 on treating liquids in box lines. (TGOPS0000826)	AMWTP	02/05/2014
C1348S	N/A	E-mail re: box line aerosol cans AK information	AMWTP	03/19/2014

Implementing Document: MP-TRUW-8.13

TRACKING NUMBER	DOCUMENT NUMBER	DOCUMENT TITLE/DESCRIPTION	DOCUMENT AUTHOR	DOCUMENT DATE
C1349A	N/A	E-mail correspondence drums of debris and drums of sludge for supercompaction	AMWTP	03/26/2014
C135A	N/A	Interview record of Mike Simmons by T. Widner and D. Herrick, ChemRisk.	T. Widner and D. Herrick	N/A
C1350S	N/A	EPA Tier 1 approval letter for disposal of INL debris and homogeneous solids at WIPP.	EPA	02/11/2014
C1351S	N/A	Repackaging of Suspect RH TRU Waste Containers	Thomas L. Clements, Jr.	06/20/2013
C1352S	NA	Email correspondence from AMWTP Production Planning: Waste Volumes for BN510.4. (NA)	Jason Lance, AMWTP Production Planning	05/08/2014
C1353S	RCM-003-14	Advanced Mixed Waste Treatment Project Defense Determination Evaluation for Idaho National Laboratory Debris Wastes Proposed for Inclusion Into the Supercompactor Feedstock (BN-508) (RCM-003-14)	Randall C. Morris	05/15/2014
C1354S	TV-003-14	Waste Volume Estimates for Los Alamos National Laboratory Item Description Codes Inclusion Into the Supercompacted Debris Waste Stream (TV-003-14)	Tim Venneman	05/20/2014
C1355S	RCM-004-14	Waste Volume Estimates for BN510.4 Supercompacted Debris Waste Stream (RCM-004-14)	Randall C Morris	05/21/2014
C1356A	RCM-005-14	Waste Material Parameter Weight Per Unit of Waste Calculations for the BN510.4 Supercompacted Debris (RCM-005-14)	Randall C. Morris	06/12/2014
C1357A	N/A	Documentation Request- AK record entry for independent source documents	Haar	01/21/2013
C1358S	N/A	Possible Salt Waste in the AK Queue	George Byram	07/29/2014
C136A	N/A	Interview Record of Joe Risinger by T. Widner and D. Herrick.	N/A	8/29/1991
C1361S	N/A	Email from Steve Tallman to Randall C. Morris re: Filters from Facility	Steve Tallman	09/02/2014
C1366S	N/A	Grit Drums	George Byram	09/16/2014
C1367S	N/A	SDOP/SMOP/EMOP in the AK queue	George Byram	09/17/2014
C1368S	RCM-006-14	Acceptable Knowledge Accuracy Assessment for July 1, 2013 to June 30, 2014 (RCM-006-14)	Randall C. Morris, PhD, AKE	09/18/2014
C137A	N/A	Interview Record of E. Putzier and E. Vejvoda by D. Herrick and J. Lamb.	D. Herrick and J. Lamb	9/5/1991

Implementing Document: MP-TRUW-8.13

TRACKING NUMBER	DOCUMENT NUMBER	DOCUMENT TITLE/DESCRIPTION	DOCUMENT AUTHOR	DOCUMENT DATE
C138A	N/A	Interview Record of Joe Aldrich by Flack and Herrick.	Flack and Herrick	8/22/1991
C139A	N/A	Interview Record of C. Barrick by D. Herrick.	D. Herrick.	12/14/1990
C140A	N/A	Interview Record of N. Clark by D. Herrick.	D. Herrick	12/13/1991
C141A	N/A	Interview Record of L. R. Crisler by T. Widner and D. Herrick.	T. Widner and D. Herrick	8/27/1991
C142A	N/A	Interview Record of N. Cypher by D. Herrick.	D. Herrick	8/13/1991
C143A	N/A	Interview Record of R. Greinetz by D. Herrick.	D. Herrick	1/17/1992
C144A	N/A	Interview record of M. Maas by D. Herrick and J. Lamb. ChemRisk.	D. Herrick and J. Lamb.	N/A
C145A	N/A	Interview Record D. Del Pizzo by D. Herrick and Flack.	D. Herrick and Flack	1/21/1992
C146A	N/A	Interview Record of S. DeWitt by Flack and Herrick.	Flack and Herrick	8/15/1991
C147A	N/A	Interview Record of V. Dingman by T. Widner and D. Herrick.	T. Widner and D. Herrick	8/14/1991
C148A	N/A	Interview Record of J. Dorr by D. Herrick.	D. Herrick	1/22/1992
C149A	N/A	Interview Record of M. W. Beranek by T. Widner and D. Herrick.	T. Widner and D. Herrick	8/7/1991
C150A	N/A	Interview Record of C. Forrey by D. Herrick and J. Lamb.	D. Herrick and J. Lamb	8/23/1991
C151A	N/A	Interview Record of J. Hebert by D. Herrick.	D. Herrick	8/6/1991
C152A	N/A	Interview Record of F. McMenus by T. Widner and D. Herrick.	T. Widner and D. Herrick	8/7/1991
C153A	N/A	Interview record of J. Morrison by D. Herrick and Flack. ChemRisk	D. Herrick and Flack	N/A
C154A	N/A	Interview Record of William V. Conner by T. Widner and J. Lamb.	T. Widner, J. Lamb	8/13/1991
C155A	N/A	Interview Record of J.D. Weaver by T. Widner and J. Lamb.	T Widner and D. Lamb	8/15/1991
C156A	N/A	Interview Record of Dr. Ross Jackson by T. Widner and Jennifer Lamb.	T. Widner, Jennifer Lamb	8/13/1991
C157A	N/A	Interview Record of R. Gisler by T. Widner and Flack.	T. Widner and Flack	8/20/1991
C158A	N/A	Interview Record of R. Simmons by S. Flack.	S. Flack	11/21/1991
C159A	N/A	Record of Conversation of Rod Hoffman, recorded by Doug Herrick and Jennifer Lamb.	Doug Herrick and Jennifer Lamb	9/4/1991
C160A	N/A	Interview Record of M. Delhierro	D. Herrick	8/13/1991
C161A	N/A	Interview Record of K. Freiberg by D. Herrick.	D. Herrick	5/9/1991

Implementing Document: MP-TRUW-8.13

TRACKING NUMBER	DOCUMENT NUMBER	DOCUMENT TITLE/DESCRIPTION	DOCUMENT AUTHOR	DOCUMENT DATE
C162A	N/A	Interview Record of R. Hilbig by D. Herrick.	D. Herrick	8/13/1991
C163A	N/A	Interview Record of G. Ideker by T. Widner and S. Flack.	T. Widner and S. Flack	08/14/1991
C164A	N/A	Interview Record of Burt Kelchner by Doug Herrick and Jennifer Lamb.	D. Herrick and J. Lamb	9/6/1991
C165A	N/A	Interview Record of L. Martella by T. Widner and D. Herrick. August 7, 1991.	T. Widner and D. Herrick	8/7/1991
C166A	N/A	Interview Record of L. Martella by D. Herrick.	D. Herrick.	8/7/1991
C167A	N/A	Interview of Record of J Merriman by D. Herrick and J. Lamb.	D. Herrick and J. Lamb	8/20/1991
C168A	N/A	Interview Record of J. D. Morrison by T. Widner and D. Herrick.	T. Widner and D. Herrick	8/29/1991
C169A	N/A	Telecon between Al Morgan of Rocky Flats (retired) and Jeff Harrison. "Information Regarding Drum Prefix Usage and Plutonium Isotopic Composition.	Jeff Harrison	1/9/1997
C170A	N/A	Telecon with Al Morgan of Rocky Flats (retired): Information Regarding Drum Prefix Usage	Jeff Harrison	2/17/1997
C171A	N/A	Telecon between Bill Connor of Kaiser-Hill LATO and Jeff Harrison. "Nonroutine Radionuclide Work."	Jeff Harrison	02/13/1997
C172A	N/A	Interoffice correspondence between L.C. Basso and J.R. Ryan of RFETS. "Characterization of Tar-Like Substance."	L. C. Basso	5/10/1994
C173A	N/A	Telecon between Rick Wagner of RFETS and Jeff Harrison. "Graphite from Prefix 0743."	Jeff Harrison	2/28/1997
C174A	N/A	Telecon between Bob Fiore of RFETS and Jeff Harrison.	Jeff Harrison	2/28/1997
C175A	N/A	Telecon between Al Morgan of Rocky Flats (retired) and Jeff Harrison. "Building 776 Size Reduction Area."	Jeff Harrison	2/27/1997
C176A	N/A	Telecon between Bill Connor of Kaiser-Hill LATO and Jeff Harrison. "Nonroutine and R&D Operations." .	Jeff Harrison	2/27/1997
C177A	N/A	Telecon between Al Morgan of Rocky Flats (retired) and Jeff Harrison. "Graphite Scarfing." February 26, 1997.	Jeff Harrison	2/26/1997
C178A	AMM-002-96	Interoffice Memorandum to A. J. Holifield of Safe Sites from A. M. Murray of Kaiser-Hill (AMM-002-96)	A. M. Murray	1/10/1996

Implementing Document: MP-TRUW-8.13

TRACKING NUMBER	DOCUMENT NUMBER	DOCUMENT TITLE/DESCRIPTION	DOCUMENT AUTHOR	DOCUMENT DATE
C179A	AMM-014-96	Interoffice Memorandum to R. E. Wilson from A. M. Murray of Kaiser-Hill. (AMM-014-96)	A. M. Murray	3/19/1996
C180A	WVC-96-6	Informal Memorandum to J.M. Ball of SSOC from W.V. Connor of Kaiser Hill, Moisture Content of Non-Salt Residue IDCs. (WVC-96-6)	W.V. Connor	3/20/1996
C181A	WVC-96-7	Informal Memorandum to J. M. Ball of SSOC from W. V. Conner of Kaiser-Hill. (WVC-96-7)	W. V. Conner	4/4/1996
C182A	AMM-019-96, KAP-006-96	Interoffice Correspondence to K.A. Phillips from A.M. Murray. Information Regarding Item Description Code 416 - AMM-019-96 (AMM-019-96, KAP-006 -96)	Alice M. Murray	4/16/1996
C183A	N/A	Telecon between Mike West of LATO, Lynn McCurry of WI (ORNL), and Kevin Peters.	Kevin Peters	3/11/1997
C184A	N/A	Interview Record of Al Morgan by Jeff Harrison.	Al Morgan	3/19/1997
C185A	N/A	Telecon between Bill Connor of LAPO and Jeff Harrison. "Special Isotopes used in R&D Operations." March 20, 1997.	Jeff Harrison	3/20/1997
C186A	KAP-017-96	Interoffice Correspondence from K. Phillips of SSOC to J. Ball, SSOC. (KAP-017-96)	Karen Phillips	12/31/1996
C187A	KAP-012-96	Interoffice Correspondence from K. Phillips of SSOC to J. Ball, SSOC, "Interim Residue Characterization Status Report". (KAP-012-96)	Karen Phillips	7/22/1996
C188A	N/A	Telecon between Bill Conner of LAPO and Jeff Harrison. "Defense Versus Non-Defense Related Projects."	Jeff Harrison	4/3/1997
C189A	N/A	Telecon between Al Morgan of Rocky Flats (retired) and Jeff Harrison. "Americium Recovery and Purification." April 3, 1997.	Jeff Harrison	4/3/1997
C190A	N/A	Telecon between Bill Conner of Rocky Flats and Jeff Harrison. "Defense Versus Non-Defense Related Projects."	Jeff Harrison	05/19/1997
C191A	N/A	Memorandum from DOE CAO to J. M. Roberson, RFFO and J. M. Wilcynski, INEEL. "Identification of Defense Waste Streams Generated at Rocky Flats Environmental Technology Site (RFETS)."	George E. Dials, DOE CBFO	05/20/1997
C192A	88-RF-0409	Letter to Albert E. Whiteman, Area Manager DOE, RFAO. "Classified Waste Characterization." (88-RF-0409)	E. R. Naimon, Rockwell International	2/10/1988

Implementing Document: MP-TRUW-8.13

TRACKING NUMBER	DOCUMENT NUMBER	DOCUMENT TITLE/DESCRIPTION	DOCUMENT AUTHOR	DOCUMENT DATE
C193A	N/A	FAX to Jeff Harrison,Wastren. "Info on 1518-4 Containers."	Jeff Paynter, M. H. Chew & Associates	7/10/1977
C194A	N/A	Telecon between Jeff Harrison and Jeff Paynter, M.H. Chew & Associates. "General Discussion of NTS Inventory of Rocky Flats Waste."	Jeff Paynter	7/10/1997
C195A	N/A	Telecon between Jeff Harrison and Jeff Paynter, M.H. Chew & Associates. "Relation of Processes Generating Classified IDCs."	Jeff Paynter	7/17/1997
C196A	N/A	Facsimile Transmission from Pat Arnold, RMRS, to Jeff Harrison, WASTREN. "Density of Sludge Drums." March 18, 1997.	Pat Arnold	3/18/1997
C197A	N/A	Memorandum from Jeff Harrison to File. "Drum Prefix Discrepancies." August 12, 1997.	Jeff Harrison	8/12/1997
C198A	N/A	E-mail note from William Becker to Rodney Arbon, "Light Ballasts."	William Becker	4/19/2000
C199A	KJP/003/0501	External letter from Kevin Peters, WASTREN, to Sheila Hailey. "Resolution of Magnesium Oxide Crucibles (IDC 368) Characterization Discrepancy." (KJP/003/0501)	Kevin Peters	5/15/2001
C200A	KJP/004/0501	External letter from Kevin Peters, WASTREN, to Sheila Hailey. "Cyanide Content of Solidified Aqueous Sludge – Bldg. 774." (KJP/004/0501)	Kevin J. Peters	5/22/2001
C201A	N/A	Interview of Gregg Park, BBWI by Sheila Hailey. "Free Liquids in First/Second Stage Sludge Samples."	Sheila Hailey	5/22/2001
C202A	N/A	Telecon/Interview between Carolyn Abbott and Rick Erdheim/Paul Krehl.	Rick Erdheim, Paul Krehl	5/23/2001
C203A	N/A	Telecon/Interview between Joan Connolly/Carolyn Abbott and Mason Harrup.	Carolyn K. Abbott	5/23/2001
C204A	KJP/006/0501	External letter from Kevin Peters, WASTREN, to Sheila Hailey. "Reclassification of Certain Homogeneous Waste to Debris Waste." (KJP/006/0501)	Kevin Peters	5/25/2001
C205A	KJP/009/0601	External letter from Kevin Peters, WASTREN, to Sheila Hailey. "Resolution of Grit (IDC 372) Characterization Discrepancy." (KJP/009/0601)	Kevin Peters	6/22/2001
C206A	N/A	Telecon between Betty Tolman and Kevin Peters/Jeff Paynter. "Beryllium Scrap in IDC 480 Waste Drum".	Kevin Peters, Jeff Paynter	10/2/2001
C207A	N/A	Summary of Review of PCB AK Sources (Reviewed 9/5/01)	Wastren	09/05/2001

Implementing Document: MP-TRUW-8.13

TRACKING NUMBER	DOCUMENT NUMBER	DOCUMENT TITLE/DESCRIPTION	DOCUMENT AUTHOR	DOCUMENT DATE
C208A	N/A	External letter and Paper from R. H. Guyman to Brian R. Monson, Idaho Department of Environmental Quality. "Response to New Mexico Environment Department Concern with IDC 002."	R. H. Guyman	9/27/2001
C209A	N/A	N/A	N/A	N/A
C210A	N/A	INEEL Internal memorandum from Yale D. Harker to Sheila Hailey. MDC for Item Description Code – 337.	Yale D. Harker	11/29/2001
C211A	N/A	External letter from Brian R. Monson, Idaho Department of Environmental Quality to Jack Depperschmidt, DOE-ID. "Regarding the April 24, 1997, Position Paper on the Addition of Absorption Activities Exempt from Permitting and Interim Status Requirements (OPE-EP097-143) for the Idaho National Engineering and Environmental Laboratory."	Brian R. Monson	6/25/1997
C212A	N/A	External letter from Robert Bullock, Idaho Department of Environmental Quality, to Dave Wessman, DOE-ID. "Receipt of INEEL Response to New Mexico Environment Department, Concerns with IDC 002 at the Radioactive Waste Management Complex on the Idaho national Engineering Laboratory."	Robert Bullock	10/29/2001
C213A	N/A	Internal memorandum from Julie Hand to Joan Connolly. "Dilutions of TWCP Semivolatile Organic Analysis Data."	Julie Hand	1/7/2002
C214A	N/A	External Letter from Kevin Peters, WASTREN, to Lisa Frost. "PCB Label Research for NCR Number 26503."	Kevin Peters	3/4/2002
C215A	N/A	External Memorandum from Kerry Watson, (DOE-CBFO). "Approval of Idaho National Engineering and Environmental Laboratory Waste Stream Profile INW243.001."	Kerry Watson	3/28/2001
C216A	N/A	External Memorandum from Kerry Watson, DOE-CBFO. "Approval of Idaho National Engineering and Environmental Laboratory Waste Stream Profile INW169.001." .	Kerry Watson	2/7/2002
C217A	N/A	External Memorandum from Kerry Watson, DOE-CBFO. "Approval of Idaho National Engineering and Environmental Laboratory Waste Stream Profile INW198.001."	Kerry Watson	2/7/2002
C218A	SMH-07-97	External letter and attachments from S. M. Hailey to C. C. Dwight, Argonne National Laboratory West. "Core Sample Plans for Miscellaneous Solidified Waste." (SMH-07-97)	S. M. Hailey	3/6/1997

Implementing Document: MP-TRUW-8.13

TRACKING NUMBER	DOCUMENT NUMBER	DOCUMENT TITLE/DESCRIPTION	DOCUMENT AUTHOR	DOCUMENT DATE
C219A	WSR-01-01	Internal memorandum to Chris Brooks from Scott Roesener. "Radioassay System Certification Capabilities Implementation Inforamtion For Organic Setups Item Description Code 003." (WSR-01-01)	Scott Roesener	10/23/2001
C220A	WSR-05-02	Internal Memorandum to David Morgan from Scott Roesener. "Radioassay System Certification Capabilities Implementation for Miscellaneous Cemented Waste Item Description Codes 292, 432, 806, 817, 818, 820, 822, and 823." (WSR-05-02)	Scott Roesener	1/29/2002
C221A	WSR-01-02	Internal Memorandum to David Morgan from Scott Roesener. "Radioassay System Certification Capabilities Implementation Information for Plastic Waste Description Code 337." (WSR-01-02)	Scott Roesener	1/29/2002
C222A	WSR-03-02	Internal Memorandum to David Morgan from Scott Roesener. "Radioassay System Certification Capabilities Implementation Information for Solidified Organics and Special Setups Waste Item Description Codes 004, 700, 801, 802." (WSR-03-02)	Scott Roesener	1/29/2002
C223A	N/A	Interview/conference between BBWI and Physics Group. "Roadmap to Physics Databases." Includes Spectra data on CD and a subsequent e-mail from Cecilia Hoffman updating access locations to databases.	Cecilia Hoffman	4/8/2002
C224A	N/A	Letter to File prepared by Joan Connolly, North Wind Environmental. "The D002 HWN is not Applicable to First and Second Stage Sludge (INW216.001) and Building 374 Sludge (INW218.001) Waste Drums that Contain Excess Free Liquid."	Joan Connolly	4/19/2002
C225A	N/A	External Memorandum from Kerry Watson, DOE-CAO. "Approval of INEEL Waste Stream Profile Form INW276.003."	Kerry Watson	7/20/2000
C226A	N/A	External Memorandum from Kerry Watson, DOE-CAO. "Approval of Idaho National Engineering and Environmental Laboratory (INEEL) Revised Waste Stream Profile Form INW276.004, Rev. 1."	Kerry Watson	9/27/2000
C227A	N/A	External Memorandum from Kerry Watson, DOE-CBFO. "Approval of Idaho National Engineering and Environmental Laboratory (INEEL) Waste Stream Profile Forms INW247.001R1 and INW296.001, Rev. 1."	Kerry Watson, DOE-CBFO	11/14/2000
C228A	N/A	External Memorandum from Kerry Watson, DOE-CBFO. "Approval of Idaho National Engineering and Environmental Laboratory (INEEL) Waste Stream Profile Form INW211.001."	Kerry Watson, DOE-CBFO	4/24/2001

Implementing Document: MP-TRUW-8.13

TRACKING NUMBER	DOCUMENT NUMBER	DOCUMENT TITLE/DESCRIPTION	DOCUMENT AUTHOR	DOCUMENT DATE
C229A	CBFO:NTP:KWW:VW:01-1007:UFC:5822	External Memorandum from Kerry Watson, DOE-CBFO. "Approval of Idaho National Engineering and Environmental Laboratory (INEEL) Waste Stream Profile Form INW211.001, Rev. 1." (CBFO:NTP:KWW:VW:01-1007:UFC:5822)	Kerry Watson, DOE-CBFO	5/3/2001
C230A	N/A	External Memorandum from Kerry Watson, DOE-CBFO. "Approval of Idaho National Engineering and Environmental Laboratory (INEEL) Waste Stream Profile Form INW216.001."	Kerry Watson, DOE-CBFO	5/24/2001
C231A	CBFO:NTP:KWW:VW:01-1065:UFC:5822	External Memorandum from Kerry Watson, DOE-CBFO. "Approval of Idaho National Engineering and Environmental Laboratory (INEEL) Waste Stream Profile Form INW218.001." (CBFO:NTP:KWW:VW:01-1065:UFC:5822)	Kerry Watson, DOE-CBFO	7/24/2001
C232A	N/A	External Memorandum from Kerry Watson, DOE-CBFO. "Approval of Idaho National Engineering and Environmental Laboratory (INEEL) Waste Stream Profile Form INW169.001."	Kerry Watson, DOE-CBFO	2/7/2002
C233A	N/A	External Memorandum from Kerry Watson, DOE-CBFO. "Approval of Idaho National Engineering and Environmental Laboratory (INEEL) Waste Stream Profile Form INW198.001."	Kerry Watson, DOE-CBFO	2/7/2002
C234A	N/A	External Memorandum from Kerry Watson, DOE-CBFO. "Approval of Idaho National Engineering and Environmental Laboratory (INEEL) Waste Stream Profile Form INW222.001."	Kerry Watson, DOE-CBFO	4/24/2002
C235A	N/A	Letter to File: Assignment of unique IDC (696) to IDC 807b waste containers.	Carolyn Abbott	7/12/2002
C236A	N/A	Letter to File prepared by Carolyn Abbott, North Wind. "Rocky Flats Waste Streams with 'split' IDCs."	Carolyn Abbott	6/11/2002
C237A	N/A	Fax of Telecon between Jeff Harrison, WASTREN, and Jan Fretthold, Rocky Mountain Remediation Services. "HEPA Filter Frame Material."	Jeff Harrison, WASTREN	4/8/1999
C238A	N/A	Letter to file prepared by Carolyn Abbott, North Wind. "Calculating and reporting the net waste weight in standard waste boxes to WIPP."	Carolyn Abbott	5/20/2002
C239A	N/A	Fax of Memorandum from Dr. Ines R. Triay, CBFO-DOE to Warren Bergholz, DOE-ID. "Annual Re-evaluation of INEEL TRU Waste Program Compliance."	Dr. Ines R. Triay	5/30/2002
C240A	N/A	Correspondence and other documentation related to the disposition of tantalum targets and subtargets at the Rocky Flats Plant. March 1974 – September 2001.	Multiple authors	N/A

Implementing Document: MP-TRUW-8.13

TRACKING NUMBER	DOCUMENT NUMBER	DOCUMENT TITLE/DESCRIPTION	DOCUMENT AUTHOR	DOCUMENT DATE
C241A	N/A	Telecon between Carolyn Abbott, North Wind, and Jeff Harrison, WASTREN. "Material in IDC 376 Drum."	Carolyn Abbott	7/18/2002
C242A	CCn 22123	Letter to L. S. Sygitowicz from T.H. Monk, BBWI. "Solidified Waste Residual Liquid De-watering Investigation at the Idaho National Engineering and Environmental Laboratory." CCN 22123. . (CCn 22123)	T.H. Monk	5/30/2001
C243A	JJE-10-2002	Letter to S. M. Edgett from J. J. Einerson, BBWI. "Update of RTR Miscertification Rate Due to Excess Free Liquids." JJE-10-2002. (JJE-10-2002)	J. J. Einerson	8/19/2002
C244A	TFF-005-02	Memorandum to T. H. Monk from T. F. Fallon. "CAR 02-078, Investigative Action 2." TFF-005-02. August 28, 2002. (TFF-005-02)	T. F. Fallon	8/28/2002
C245A	WCP02-31	Rocky Flats Internal Letter from J. K. Paynter to Distribution. "Hazardous Constituents of Rocky Flats Waste." WCP02-31. (WCP02-31)	J. K. Paynter	5/23/1989
C246A	N/A	Telecon between Rick Chavez, Westinghouse TRU Solutions, and Joan Connolly, North Wind, et.al. "Leaded Rubber Gloves and Aprons WSPF and New Target Analyte, Methyl Chloride."	Rick Chavez, Westinghouse TRU Solutions	8/26/2002
C247A	N/A	Telecon between Jeff Harrison, WASTREN, and Charles Marcinkiewicz, North Wind. "Leaded Rubber and Possible D006 and D007 HWNS."	Jeff Harrison	9/24/2002
C248A	N/A	N/A	N/A	N/A
C249A	CLW-180-93, CEX-061-96, WSS-C0-01-0786	Internal Correspondence from J. A. Nesheim to F. M. Durel. "Classification Review Exemption – CLW-180-93." November 18, 1993. External letter to J. M. Schoen, RMRS, from J. A. Nesheim, Worldwide Security Services. "Classification Review Exemption CEX-061-96 for WSRIC Data." November 21, 1996. External letter to J. M. Schoen, RMRS, from J. A. Nesheim, Worldwide Security Services. "Electronic WSRIC Classification and UCNI Review Exemption (JAN-108-01) WSS-C0-01-0786." December 4, 2001. W (CLW-180-93, CEX-061-96, WSS-C0-01-0786)	Multiple authors	N/A

TRACKING NUMBER	DOCUMENT NUMBER	DOCUMENT TITLE/DESCRIPTION	DOCUMENT AUTHOR	DOCUMENT DATE
C250A	N/A	Interoffice Memorandums from S. Hailey to T. H. Monk transmitting the Acceptable Knowledge Accuracy Assessments for First Quarter FY–2000, dated November 29, 2000 and Third Quarter FY–2001 dated July 19, 2001; and from L. Frost to T. H. Monk for FY–2002, Rev. 1, dated August 8, 2002, and to M. Sherick for Final FY–2002 assessment dated January 14, 2003. January 2003.	S. Hailey, L. Frost	N/A
C251A	N/A	Group Interview Record of Eugene Sands, Larry Stickel, Harley Toy, Max Berchtold, Mike Failey, and George Kirsch, BCL, conducted by Kevin Peters/Jeff Harrison, WASTREN, Inc.	Kevin Peters/Jeff Harrison, WASTREN, Inc.	5/13/1998
C252A	N/A	Interview Record of Harley Toy and George Kirsch, BCL, conducted by Kevin Peters, WASTREN, Inc.	Kevin Peters, WASTREN, Inc.	7/13/1998
C253A	168-WG-91	Internal correspondence to A. A. Church, EG&G Rocky Flats, Inc: Status of TCLP Analysis on Leaded Gloves and Leaded Glovebox Windows (168-WG-91)	D. L. Kidd, EG&G Rocky Flats, Inc.	3/13/1991
C254A	N/A	Monthly/Quarterly BCL Letter Reports to COO 1978 – 1982. September, 1982.	Battelle Columbus Laboratories	9/1/1982
C255A	C255A	Internal correspondence from Harley L. Toy to Steve Layendecker, BCL. May 22, 1998. (C255A)	Harley L. Toy	5/22/1998
C256A	N/A	Letter from Joseph Dettorre to James Fletcher, DOE Chicago Operations and Regional Office. August 25, 1981.	Joseph Dettorre of DOE Chicago Operations and Regional Office	8/25/1981
C257A	N/A	Interview Record of Larry Stickel and George Kirsch, BCL, conducted by Kevin Peters and Scott Smith, WASTREN, Inc. "Source and Components of Waste From Building JN-4."	Kevin Peters and Scott Smith of WASTREN	9/26/2000
C258A	N/A	Interview Record of J.B. Williamson, BCL, conducted by Kevin Peters and Scott Smith, WASTREN, Inc. "Historical Operations Conducted in JN-4." September 26, 2000.	Kevin Peters and Scott Smith, WASTREN, Inc.	09/26/2000
C259A	N/A	Interview Record of David Freas, BCL, conducted by Kevin Peters and Scott Smith, WASTREN, Inc. "Historical Operations in Building JN-4."	Kevin Peters and Scott Smith, WASTREN, Inc.	09/29/2000
C260A	N/A	Interview Record of William Pardue, BCL, conducted by Scott Smith, WASTREN, Inc. "Historical Operations in Building JN-4."	Scott Smith, WASTREN, Inc.	10/02/2000

Implementing Document: MP-TRUW-8.13

TRACKING NUMBER	DOCUMENT NUMBER	DOCUMENT TITLE/DESCRIPTION	DOCUMENT AUTHOR	DOCUMENT DATE
C261A	N/A	Letter to AK Record authored by Scott Smith, WASTREN, Inc. "TCLP Analysis of Incandescent, Fluorescent and Mercury Vapor Light Bulbs."	Scott Smith, WASTREN, Inc	7/6/2001
C262A	N/A	Letter to AK Record authored by Scott Smith, WASTREN, Inc. "RCRA Hazardous Constituents in Paint and Paint Related Products."	Scott Smith, WASTREN, Inc	12/7/2001
C263A	N/A	Letter to AK Record, "Clarification of Letter to AK Record dated December 7, 2001; Author: Scott M. Smith, Re: RCRA Hazardous Constituents in Paint Related Products," and responding concurrence from Scott Smith.	Carolyn Abbott, North Wind, Inc.	3/5/2003
C264A	AK-03-001	Acceptable Knowledge Resolution Checklist, AK-03-001. (AK-03-001)	Csrolyn Abbott	1/1/2003
C265A	TP:03:040010, AM-BN-L-5766, TP:03:04020	External letter from K. Jackson (TP:03:040010), Washington TRU Solutions, LLC, to Distribution. "Content Codes with Beryllium in Quantities Greater than 1 Percent." January 24, 2003. External letter from Eric Schweinsberg (AM-BN-L-5766), BNFL, to Kerry Watson. "Determination of Beryllium Contamination in Rocky Flats Plant Wastes Stored at the INEEL." April 3, 2003. External letter from M. L. Caviness (TP:03:04020), Washington TRU Solutions, to D. Pound, BNFL Inc. "Modification of ID 117/217 and ID 125/225 Chemical Lists for Beryllium." March 25, 2003. (TP:03:040010, AM-BN-L-5766, TP:03:04020)	K. Jackson; Eric Schweinsberg; M. L. Caviness	MULTIPLE
C266A	M4T00-PJC-02-076	Memorandum from R. Clinton, Fluor (Hanford) to P. J. Crane. "SR-90 to CS-137 Ratio for Appendix E of Hanford Site Transuranic Waste Certification Plan for NDA." M4T00-PJC-02-076. April 11, 2002. (M4T00-PJC-02-076)	Sheila Hailey.	4/11/2002
C267A	N/A	Letter to AK Record and supporting documentation prepared by Jeff Harrison, WASTREN. "Review of Historical Rocky Flats Waste Shipment Records." January 31, 2003.	Jeff Harrsion	01/31/2003
C268A	N/A	Interoffice Memorandum and supporting data from M. J. Sherick to J. H. Pletscher, INEEL. "BNFL-RFI 2003-13 Special Trips Query, April 14, 2003."	M. J. Sherick	4/28/2003
C269A	N/A	E-mail from Sheila Hailey to Julia Bagley, et al., "Mound Waste – Packaging Materials."	Created for the AMWTP Project.	8/11/2003

Implementing Document: MP-TRUW-8.13

TRACKING NUMBER	DOCUMENT NUMBER	DOCUMENT TITLE/DESCRIPTION	DOCUMENT AUTHOR	DOCUMENT DATE
C270A	N/A	Memorandum from Betty Tolman to AK Record, "Confirmatory Testing performed by Bechtel BWXT, Inc. on Containers remaining in AMWTP Inventory."	Betty Tolman	8/20/2003
C271A	BJT-01-2003	Memorandum from Betty Tolman to Gina Tedford, "Cs137 and Sr90 in Rocky Flats-generated Waste." (BJT-01-2003)	Betty Tolman	9/4/2003
C272A	N/A	Memorandum from Sheila Hailey to Eric Scwheinsberg, Acceptable Knowledge Documentation of Plastic Round Bottom Liner – C272A, Dated	Sheila Hailey	3/10/2004
C273A	N/A	Interview with Vince Medina conducted by Betty Tolman. Packaging/Waste Configuration for First Stage Sludge.	Betty Tolman	3/15/2004
C274A	N/A	Untitled letter defining TRU waste, from EPA office of Air and Radiation to DOE CBFO. From Frank Marcinowski, Director EPA Radiation Protection Division, to Ines Triay, Manager CBFO.	Frank Marcinowski	8/8/2003
C275A	A-03-05	Letter from New Mexico Environment Department, Hazardous Waste Bureau, RE: NMED Approval of the AMWTP Final Audit Report, Audit A-03-05. From Sandra Martin, Acting Chief, Hazardous Waste Bureau to Ines Triay, Manager CBFO and Steven Warren Pres. Washington TRU Solutions LLC. (A-03-05)	Sandra Y. Martin, New Mexico Environment Department, Hazardous Waste Bureau	12/23/2003
C276A	N/A	BNFL Inc. Memorandum. Vent Date/Pack Date. From Eric Schweinsberg to AMWTP Chemists.	Eric Schweinsberg	2/17/2004
C277A	N/A	DOE CBFO Memorandum. Authority Granted to INEEL AMWTP for Characterization and Certification of Contact Handled Homogenous Solids Transuranic Waste. R. Paul Detwiler, Acting Manager CBFO, To Elizabeth Sellers, DOE-ID Manager.	R. Paul Detwiler, Acting Manager CBFO	3/9/2004
C278A	SH-007-2004	AK Accuracy Assessment. SH-007-2004. (SH-007-2004)	Sheila Hailey	8/16/2004
C279A	N/A	Telecons and e-mails relating to Florco, Sorbal, and Auto Dri absorbents.	Generated for the AMWTP Project.	8/23/2004
C280A	TLC-7-86	EG&G Idaho Interoffice correspondence from T. L. Clements, Jr. to L. A. Cook. "Assessment of Weight of Lead in Drums Processed by SWEPP" (TLC -7-86)	T. L. Clements, Jr.	01/22/1986

Implementing Document: MP-TRUW-8.13

TRACKING NUMBER	DOCUMENT NUMBER	DOCUMENT TITLE/DESCRIPTION	DOCUMENT AUTHOR	DOCUMENT DATE
C281A	JAC-023-04	Letter from John A. Ciucci to Joseph A. Legare, "Revision 2 For Resolution of Cesium-137 (Cs-137) Acceptable Knowledge (AK) Discrepancy Between Rocky Flats Environmental Technology Site (Site) and Idaho National Engineering and Environmental Laboratory (INEEL)", JAC-023-04. December 27, 2004. (JAC-023-04)	John A. Ciucci	12/27/2004
C282A	SPC-001-2005	Memorandum from Steve Carpenter to Assay Independent Technical Reviewers, "Be Contaminated Waste." (SPC-001-2005)	Steve Carpenter	1/13/2005
C283A	DGP-002-2005	Correspondence between Don Pound and M. L. Caviness regarding Content Code Addition for Beryllium-contaminated Waste. (DGP-002-2005)	Don Pound	1/12/2005
C284A	DGP-009-2004	Correspondence between Don Pound and M. L. Caviness regarding Modification of Content Code 111/211. April 5, 2004 (DGP-009-2004)	Don Pound	4/5/2004
C285A	EPS-085-2004	Letter from Eric Schweinsberg to Kerry Watson, "Acceptable Knowledge Revision (AKR) for Cesium-137 and Strontium-90." (EPS-085-2004)	Eric Schweinsberg	12/21/2004
C286A	MC-001-2005	Memorandum from Martin Clapham to Eric Schweinsberg, "Acceptable Knowledge Revision of Cesium-137 and Strontium-90." (MC-001-2005)	Martin Clapham	2/9/2005
C287A	N/A	Correspondence from T. Venneman to V. Sendelweck regarding Nitrate Compounds and Organic Material Contact in Retrieved Waste.	Tim Venneman	2/28/2005
C288A	EPS-081-2004	Memorandum from Eric Schweinsberg to Elvin Dumas, "Sampling Plan for BNINW216 – Lot 3." (EPS-081-2004)	Eric Schweinsberg	11/17/2004
C289A	N/A	Memorandum to file from Vivian Sendelweck, "Boxes of Rocky Flats Waste to be included in the Supercompacted Debris Waste (BN510), revised April 13, 2005.	Vivian Sendelweck	04/13/2005
C290A	N/A	Memorandum to file, "Estimation of percentage of ferrous and non-ferrous metals and cellulosic, plastic, and rubber (CPR) waste materials in the supercompacted debris waste (BN510)"	Vivian Sendelweck	3/2/2005
C291A	CKA-019-06	Memorandum to file from Carolyn K. Abbott, "Development of Default Mass Fraction Values for Mound, Battelle, Bettis, and the AMWTP Wastes," , (CKA -019-06)	Carolyn K. Abbott	4/12/2006
C292A	MLJ-001-07	Memorandum to file, Estimation of Generation Rate and Quantity to be Included in the Supercompacted Debris Waste (BN510). (MLJ-001-07)	Micky L. Johnson	6/26/2007

Implementing Document: MP-TRUW-8.13

TRACKING NUMBER	DOCUMENT NUMBER	DOCUMENT TITLE/DESCRIPTION	DOCUMENT AUTHOR	DOCUMENT DATE
C293A	N/A	Memorandum to file from Vivian Sendelweck, "Two IDCs (460 and 463) of Rocky Flats waste are not included in RFP AK baseline document"	Vivian Sendelweck	3/17/2005
C294A	N/A	Interview record of Eric D'Amico conducted by Kathy Zbryk, BNFL, Inc. on March 15, 2005, titled "Interview Regarding Debris IDCs 488, 491, 831, 832, 833 Packaged into Metal Boxes at RFETS and Received at the INL October 1970 through 1988 and Debris IDCs 460 and 463 Packaged into Drums at RFETS and Received at the INL from October 1970 through 1988."	Kathy Zbryk, BNFL, Inc.	3/15/2009
C295A	N/A	Interview record of Pat Arnold conducted by Kathy Zbryk, BNFL, Inc. on March 17, 2005, titled "Interview Regarding Debris IDCs 488, 491, 831, 832, 833 Packaged into Metal Boxes at RFETS and Received at the INL October 1970 through 1988 and Debris IDCs 460 and 463 Packaged into Drums at RFETS and Received at the INL from October 1970 through 1988."	Kathy Zbryk, BNFL, Inc.	3/17/2005
C296A	N/A	Interview record of Carl Trump conducted by Kathy Zbryk, BNFL, Inc. on March 18, 2005, titled "Interview Regarding Debris IDCs 488, 491, 831, 832, 833 Packaged into Metal Boxes at RFETS and Received at the INL October 1970 through 1988 and Debris IDCs 460 and 463 Packaged into Drums at RFETS and Received at the INL from October 1970 through 1988," Clarification email dated April 13, 2005.	Kathy Zbryk, BNFL, Inc.	4/13/2005
C297A	N/A	Letter to Frank Marcinowski, Director, Radiation Protection, EPA, from R. Paul Detwiler, Acting Manager, DOE, CBFO, dated March 5, 2004. re: Disposition of supercompacted waste from the Idaho National Environmental and Engineering Laboratory's Advanced Mixed Waste Treatment Project (AMWTP).	R. Paul Detwiler, Acting Manager, DOE, CBFO	3/5/2004
C298A	N/A	Letter from Kerry Watson, Director, Office of Characterization and Transporation, Department of Energy, Carlsbad Field Office, to James Bearzi, New Mexico Environment Department, Hazardous Waste Bureau, dated March 30, 2005	Kerry Watson	3/30/2005
C299A	KJP/002/0399	Correspondence from Kevin J. Peters to Rajib Bhatt, "Assessment of TRU Waste Box Inventory," (KJP/002/0399)	Kevin J. Peters	3/16/1999
C300A	DOE/WIPP-95-2125 Draft	Waste Isolation Pilot Plant Contact Handled (CH) Technical Safety Requirements, Draft TBD 2005, prepared for United States Department of Energy, Washington Group International, Energy and Environment, Washington TRU Solutions LLC. (DOE/WIPP-95-2125 Draft)	Washington TRU Solutions LLC	4/18/2005

Implementing Document: MP-TRUW-8.13

TRACKING NUMBER	DOCUMENT NUMBER	DOCUMENT TITLE/DESCRIPTION	DOCUMENT AUTHOR	DOCUMENT DATE
C301A	N/A	Memorandum from Kerry W. Watson, Director, Office of Characterization and Transportation to distribution, entitled "Method for Reporting HSG in 100-Gallon Drums Containing Supercompacted 55-Gallon Drums with Rigid Liners"	Kerry W. Watson	5/31/2005
C302A	N/A	Letter to file regarding plywood spacers in Mound waste identified as waste versus packaging. K. Zbryk, M. Clapham, E. Dumas,	K. Zbryk, M. Clapham, E. Dumas	2/24/2005
C303A	N/A	Memo re: Review of MD-835 Containers with Plywood Spacers	Barry Howes	6/23/2005
C304A	N/A	Memo (email) to File, Don Pound to Eric Schweinsberg, MD-835 CPR Evaluation, June 23, 2005.	Don Pound	6/23/2005
C305A	N/A	Enclosure 3 with letter (C297A). Effect of Waste Porosity Modeling on AMW Performance Assessment.	Clifford W Hansen, Joshua S. Stein, and Bill Zelinski, Sandia National Laboratories, Carlsbad Programs	3/4/2004
C306A	N/A	Enclosure 6 with letter (C297A). Effect of Naturally Occurring Sulfate on the MgO Safety Factor in the Presence of Supercompacted Waste and Heterogeneous Waste Emplacement. Joseph F. Kanney, Anna C. Snider, T. William Thompson, and Laurence H. Brush, Sandia National Laboratories, Carlsbad Programs.	Joseph F. Kanney, Anna C. Snider, T. William Thompson, and Laurence H. Brush, Sandia National Laboratories, Carlsbad Programs	3/5/2004
C307A	N/A	Enclosure 4 with letter (C297A). memorandum to Records, Effect of Increased Gas Viscosity on repository Pressures in the ANW Performance Assessment.	Joseph F. Kanney, William P. Zelinski, and Clifford W. Hansen. Sandia National Laboratories	3/3/2004
C308A	N/A	Enclosure 5 with letter (C297A). Memorandum to Records, Effect of TDOP stacking assumptions in analysis of supercompacted waste (Revision 1). Clifford W. Hansen and Anna Snider. Sandia National Laboratories.	Clifford W. Hansen and Anna Snider. Sandia National Laboratories	3/2/2004
C309A	N/A	Enclosure 2 with letter (C297A). Effect of Increased Iron Surface area from Supercompacted AMWTP Waste on Long-Term Repository Conditions as Modeled in Performance Assessment if the WIPP. Joshua S. Stein and William P. Zelinski, Sandia National Laboratories, Carlsbad Programs Group.	Joshua S. Stein and William P. Zelinski, Sandia National Laboratories, Carlsbad Programs Group	3/1/2004

Implementing Document: MP-TRUW-8.13

TRACKING NUMBER	DOCUMENT NUMBER	DOCUMENT TITLE/DESCRIPTION	DOCUMENT AUTHOR	DOCUMENT DATE
C310A	N/A	Enclosure 1 with letter (C297A). Discussion of Material Properties for AMW Waste. Francis D. Hansen, Sandia National Laboratories, Carlsbad Programs Group.	Francis D. Hansen, Sandia National Laboratories, Carlsbad Programs Group	3/1/2004
C311A	SPC-026-2005	Memorandum from Steve Carpenter, TRU Programs SPM/AKE Designee to Eric Schweinsberg, Site Project Manager, "Detection of 1,1-dichloroethylene in BNINW216 Rev. 1 Reconciliation Lots." (SPC-026-2005)	Steve Carpenter	4/19/2005
C312A	SPC-018-2005	Memorandum from Steve Carpenter, TRU Programs SPM/AKE Designee to Eric Schweinsberg, TRU Programs Site Project Manager, "Discrepancy Report D031A – Beryllium Greater than 1% by Weight in RF-IDC 800 Waste", SPC-018-2005 (SPC-018-2005)	Steve Carpenter, TRU Programs SPM/AKE Designee	3/14/2005
C313A	EPS-086-2004	Memorandum from Eric Schweinsberg, TRU Programs Site Project Manager (SPM) to File, "Discussion with RFETS Regarding Resolution of Discrepancy Between RFETS and INEEL Acceptable Knowledge on Cesium-137", EPS-086-2004. (EPS-086-2004)	Eric Schweinsberg, TRU Programs Site Project Manager (SPM)	12/15/2004
C314A	N/A	E-Mail correspondence from Jeffrey D. Mousseau to Carolyn Abbott "Write-up needed", June 21, 2005; E-Mail correspondence from Carolyn Abbott to Jeffrey D. Mousseau "Write-up needed", June 21, 2005	Jeffrey D. Mousseau, Carolyn Abbott	6/21/2005
C315A	N/A	E-Mail correspondence from Vincent J. Medina to Carolyn Abbott, "Certified weights for the AK record"	Vincent J. Medina	6/1/2005
C316A	N/A	E-Mail correspondence from Vincent J. Medina to Eric P. Schweinsberg, "Certified weight items to look-up table"	Vincent J. Medina	5/19/2005
C317A	EPS-087-2004	Memorandum from Eric P. Schweinsberg to Kerry Watson "Waste Stream Profile BNINW835, " EPS-087-2004 (EPS-087-2004)	Eric P. Schweinsberg	12/20/2004
C318A	SPC-025-2005	Memorandum from Steve Carpenter to Eric Schweinsberg, "Submittal to File: Instructions for BN835 Plywood Spacers as Waste or Packaging," SPC-025-2005 (SPC-025-2005)	Steve Carpenter	4/19/2005
C319A	N/A	Memorandum to Brian Edgerton, DOE-ID from Kerry W. Watson, CBFO re: CBFO Approval of AMWTP Procedure INST-FOI-17 Revision 3D	Kerry W. Watson, CBFO	12/17/2004
C320A	N/A	E-mail correspondence from Mike Papp to Micheline Johnson, "Container M00821."	Mike Papp	7/27/2005

Implementing Document: MP-TRUW-8.13

TRACKING NUMBER	DOCUMENT NUMBER	DOCUMENT TITLE/DESCRIPTION	DOCUMENT AUTHOR	DOCUMENT DATE
C321A	CBFO:OOM:IRT:VW:05-0031:UFC:5822	Memorandum to Jeff Snook, DOE-ID from Kerry W. Watson, Director, CBFO. Subject: Clarify a Proposed Method of Random Selection of Waste Containers for Coring (CBFO:OOM:IRT:VW:05-0031:UFC:5822)	Kerry W. Watson, Director, CBFO	06/09/2005
C322A	N/A	Memo correspondence from Norman Cypher to Ty Vess "Building 374 Operations."	Norman Cypher	7/13/1998
C323A	CKA-011-2005	Memorandum from Carolyn Abbott to File, "Estimated Percentages of Ferrous and Non-Ferrous Metals and Cellulosics, Plastic, and Rubber (CPR) in Filter Debris Waste Stream BN211." CKA-011-2005. (CKA-011-2005)	Carolyn Abbott	8/16/2005
C324A	VSS-001-2005	Memorandum to file from Vivian Sendelweck "Estimation Of Percentages Of Ferrous And Non-Ferrous Metal And Cellulosic, Plastic, And Rubber (CPR) Waste Materials In BN835 Waste Stream" VSS-001-2005 (VSS-001-2005)	Vivian Sendelweck	8/16/2005
C325A	VSS-002-2005	Memorandum to file from Vivian Sendelweck "Estimation Of Percentages Of Ferrous And Non-Ferrous Metal And Cellulosics, Plastic, And Rubber (CPR) Waste Materials In BNINW216 Waste Stream" VSS-002-2005 (VSS-002-2005)	Vivian Sendelweck	8/16/2005
C326A	VSS-003-2005	Memorandum to file from Vivian Sendelweck "Estimation Of Percentages Of Ferrous And Non-Ferrous Metal And Cellulosics, Plastic, And Rubber (CPR) Waste Materials In BNINW218 Waste Stream" VSS-003-2005 (VSS-003-2005)	Vivian Sendelweck	8/16/2005
C327A	CBFO:OCT:KWW:VW:05-1121:UFC:5822	Memorandum from Ines Triay, Acting Manager, Carlsbad Field Office to Elizabeth Sellers, DOE-ID Manager, Certification Authority Grange to INL AMWTP for Characterization and Certification of Contact handled TRU Debris Waste and Super-compacted Debris (S5000) Waste (A-05-08). (CBFO:OCT:KWW:VW:05-1121:UFC:5822)	Ines Triay, Acting Manager, Carlsbad Field Office	5/12/2005
C328A	SPC-026-2005	Memorandum to Eric Schweinsberg, Site Project Manager from Steve Carpenter, TRU Programs SPM/AKE Designee; Submittal to File: Detection of 1,1-dichloroethylene in BNINW216 Rev 1. Reconciliation Lots, SPC-026-2005. (SPC-026-2005)	Steve Carpenter, TRU Programs SPM/AKE Designee	4/19/2005
C329A	N/A	Memorandum to EM-13 (Stan Wolf, 301-903-7962) from Frank Marcinowski, Deputy Assistant Secretary for Logistics and Waste Disposition Enhancements, US DOE, Re: Process for TRU Waste Defense Determination, February 24, 2005.	Deputy Assistant Secretary for Logistics and Waste Disposition Enhancements, US DOE	02/24/2005

Implementing Document: MP-TRUW-8.13

TRACKING NUMBER	DOCUMENT NUMBER	DOCUMENT TITLE/DESCRIPTION	DOCUMENT AUTHOR	DOCUMENT DATE
C330A	MLJ-002-2005	Memorandum from M. L. Johnson to File, "Estimated Percentages of Ferrous and Non-Ferrous Metals and Cellulosics, Plastic, and Rubber in Metal Debris Waste Stream BN296." MLJ-002-2005. September 14, 2005. (MLJ-002-2005)	M.L. Johnson	9/14/2005
C331A	MLJ-003-2005	Memorandum to file from M. L. Johnson "Estimated Percentage of Plutonium in Metal Debris Waste Stream BN296, MLJ-003-2005, September 22, 2005." (MLJ-003-2005)	M. L. Johnson	9/22/2005
C332A	VSS-004-2005	Memorandum from Vivian Sendelweck to File, "Estimated Percentages of Ferrous and Non-Ferrous Metals and Cellulosics, Plastic, and Rubber (CPR) in Glass Debris Waste Stream BN243." September 14, 2005. (VSS-004-2005)	Vivian Sendelweck	9/14/2005
C333A	TV-010-2006	Memorandum to file from Tim Venneman "Estimated Percentage of Ferrous and Non-Ferrous Metals and CPR in Resin Waste Stream BN432" TV-010-2006 (TV-010-2006)	Tim Venneman	3/8/2006
C334A	TV-009-2006	Memorandum to file: Estimated Perecentage of Plutonium in Resin Waste Stream BN432. (TV-009-2006)	Tim Venneman	03/08/2006
C335A	VSS-006-2005	Memorandum to file from Vivian Sendelweck, "Estimated Percentage of Plutonium in Glass Debris Waste Stream BN243)," September 16, 2005. (VSS-006-2005)	Vivian Sendelweck	9/16/2005
C336A	N/A	Correspondence from Carolyn Abbott, Vivian Sendelweck, Tim Venneman to Ron Reeves and Rick Chaves "Method to handle PCBs in TRU wastes, how to describe in Waste Stream Summaries (WSS), document, label, TRUCON, 10 day notice, etc." September 16, 2005	Carolyn Abbott, Vivian Sendelweck, Tim Venneman	9/16/2005
C337A	VSS-008-2005	Memorandum to File, Estimated Percentages of Ferrous and Non-Ferrous Metals and Cellulosics, Plastic, and Rubber (CPR) in Leaded Rubber Debris Waste Stream BN252. (VSS-008-2005)	Vivian Sendelweck	9/20/2005
C338A	VSS-007-2005	Memorandum to file: Estimated Percentage of Plutonium in Leaded Rubber Debris Waste Stream BN252 (VSS-007-2005)	Vivian Sendelweck	9/23/2005
C339A	N/A	Monthly Reports For the TRU Waste Systems Office for the Pelletized Waste Form Demonstration Program	Miscellaneous Mound records transmitted to the AMWTP.	N/A

Implementing Document: MP-TRUW-8.13

TRACKING NUMBER	DOCUMENT NUMBER	DOCUMENT TITLE/DESCRIPTION	DOCUMENT AUTHOR	DOCUMENT DATE
C340A	N/A	Internal Memo From A. B. Combs, "WIPP Criteria."	Miscellaneous Mound records transmitted to the AMWTP.	8/31/1981
C341A	N/A	Mound WIPP Certification Program Plan for Newly Generated Contact Handled TRU Waste, from D. L. Gillis, dated December 15, 1983	D. L. Gillis	12/15/1983
C342A	N/A	Internal Memo from Safety and Loss Prevention, titled "Polychlorinated Biphenyls Annual Report for 1978."	Miscellaneous Mound records transmitted to the AMWTP.	6/25/1979
C343A	N/A	Memo to Mr. L. Leventhal From R. K. Blauvelt requesting information on EP toxicity testing capabilities.	R. K. Blauvelt	3/14/1985
C344A	HWP 84/42	Department of Energy memo to H. L. Turner from R. M. Munson, dated August 23, 1984, titled "Hazardous Chemical Defense Waste Management Program Site Visit Report (HWP 84/42)." (HWP 84/42)	R. M. Munson	8/23/1984
C345A	N/A	Fax from J. W. Guerror to R. K. Blauvelt of Mound on April 11, 1984, titled, "Defense Transuranic Waste Materials Program or Funding Source Questionnaire."	J. W. Guerror	4/11/1984
C346A	N/A	Internal Memo, dated June 18, 1984 sent from R. K. Blauvelt to L. J., titled "Monthly Report for TRU Waste Systems Office."	R. K. Blauvelt	6/18/1984
C347A	N/A	External Memo from A. Olding of CINN-Quipp, Inc. to R. K. Blauvelt, dated July 13, 1984, titled, "Neyra Industries, Inc. Resinex 60 Analysis of Soil Samples".	A. Olding	7/13/1984
C348A	TLC-8-81	External Memo from R. L. Clements to R. K. Blauvelt, dated May 5, 1981, titled "Stored Transuranic Waste Characterization – TLC-8-81." (TLC-8-81)	R. L. Clements	05/05/1981
C349A	TLC-9-84	External Memo from T. L. Clements to R. K. Blauvelt, dated July 2, 1984, titled "WIPP Immobilization Criterion Study – TLC-9-84." (TLC-9-84)	T. L. Clements	07/02/1984
C350A	N/A	Internal Memo from the D&D project Leader to V. E. Castleberry, dated February 4, 1980; titled "Informal Investigation of Foaming Incident on October 17, 1979."	Mound D&D project Leader	2/4/1980

Implementing Document: MP-TRUW-8.13

TRACKING NUMBER	DOCUMENT NUMBER	DOCUMENT TITLE/DESCRIPTION	DOCUMENT AUTHOR	DOCUMENT DATE
C351A	N/A	Internal Memo to H. Kresney from R. K. Blauvelt, dated August 20, 1985; titled "TRU Transportation Plan.	R. K. Blauvelt	8/20/1985
C352A	N/A	Memo to D.G. Carfasno from A.R. Campbell, dated June 4, 1979, titled "Cs-137 Content in Soil Samples."	A.R. Campbell	6/4/1979
C353A	78-RF-2021	External Memo from R. L. Olsen of Rocky Flats to R. K. Blauvelt of Mound, dated October 20, 1978; titled "Guidelines for Off-Site Contaminated Soil." (78-RF-2021)	R. L. Olsen	10/20/1978
C354A	N/A	Memo from R. K. Blauvelt to A. Reiser, US-DOE, dated October 25, 1984; titled "Mound Waste Streams."	R. K. Blauvelt	10/25/1984
C355A	N/A	Internal Memo from Safety and Loss Prevention, dated June 25, 1980; titled "Disposition of Spent Photo Fixer Solution."	Safety and Loss Prevention	6/25/1980
C356A	N/A	Internal Memo from A. H. Vaughters to Distribution, dated March 17, 1982; titled: "Chemical Waste Disposal Guidelines."	A. H. Vaughters	3/17/1982
C357A	N/A	Memo from US Atomic Energy Commission, dated March 31, 1971; titled "Criteria for Plutonium Storage Facilities."	US Atomic Energy Commission	3/31/1971
C358A	N/A	Internal Memo from A. F. Schmidt to D. A. Edling, dated June 19, 1972; titled "Packaging and Storage of Pu-238 Heat Sources in T-257."	A. F. Schmidt	6/19/1972
C359A	N/A	Memo from R. T. Braun to E. A. Walker, dated January 28, 1976; titled "Radioactive Wastes Shipped to INEL."	R. T. Braun	01/28/1976
C360A	N/A	Internal Memo from W. R. Harris to R. K. Blauvelt dated March 4, 1976; titled "Acid/Caustic TRU Waste Drums – Pressure Check (Interim Report)".	W. R. Harris	3/4/1976
C361A	N/A	Internal Memo from W. R. Harris to W. T. Cave, dated July 8, 1976; titled "Process Review 76-7."	W. R. Harris	07/08/1976
C362A	N/A	Internal Memo from D. Elding to F. Traino, dated February 21, 1975; titled "Disposition of High Level Radioactive Caustic and Acid TRU Drums."	D. Elding	2/21/1975
C363A	N/A	Internal Memo from F. A. Traino to T. C. Elswick, dated November 28, 1977; titled "Repackaging of Acid/Caustic Drums."	F. A. Traino	11/28/1977
C364A	N/A	Internal Memo from W. R. Harris to D. A. Edling, dated September 10, 1975; titled "TRU Drums shipped to Idaho."	W. R. Harris	09/10/1975

Implementing Document: MP-TRUW-8.13

TRACKING NUMBER	DOCUMENT NUMBER	DOCUMENT TITLE/DESCRIPTION	DOCUMENT AUTHOR	DOCUMENT DATE
C365A	N/A	Internal Memo from R. K. Blauvelt to A. G. Barnett, dated November 15, 1978; titled "Repackaging of Acid/Caustic Waste."	R. K. Blauvelt	11/15/1978
C366A	N/A	External memo from D. A. Edling to H. N. Hill, dated July 5, 1979; titled "Packaging of TRU Wastes for Shipment to INEL."	D. A. Edling	07/05/1979
C367A	N/A	Internal Memo to F. A. Traino, titled Radioactive Waste From Redrumming Operations.	D. A. Edling	1/15/1979
C368A	N/A	Internal Memo from W. H. Smith to A. R. Campbell, et all, dated November 15, 1978; titled "Acid/Caustic Drum Assay."	W. H. Smith	11/15/1978
C369A	N/A	External Memo from W. T. Cave to R. L. Wainwright, dated October 14, 1974; titled "Packaging of High Risk TRU Waste."	W. T. Cave	10/14/1974
C370A	N/A	Internal Memo from R. K. Blauvelt to B. R. Kokenge dated March 23, 1977; no title.	R. K. Blauvelt	3/23/1977
C371A	N/A	External Memo from J. A. Chacon, United States Energy Research and Development Administration, to J. E. Bradley, Monsanto Research Corporation, dated November 16, 1976; no title.	J. A. Chacon	11/16/1976
C372A	N/A	Waste Management Quarterly and Monthly Reports, Richard Blauvelt, December 1979 to December 1985.	Richard Blauvelt	MULTIPLE
C373A	N/A	External Memo from T. C. Jones DOE-ABQ, to H. Hill, dated July 2, 1978; titled "D&D TRU Waste Shipments to ID."	T. C. Jones, DOE-ABQ	7/2/1978
C374A	N/A	Internal Memo from R. K. Blauvelt to B. R. Kokenge, dated June 30, 1978; titled "Trip Report #150, Visit to Savannah River Site, Aiken, South Carolin 6/23/78."	R. K. Blauvelt	6/30/1978
C375A	N/A	Memorandum to D.A. Edling from J. R. Geichman, "Special TRU Containers," April 5, 1978.	J. R. Geichman	4/5/1978
C376A		External Memo to M. L. Mullins, Packaging Criteria for Transuranic Waste Shipments to INEL	H. N. Hill	7/25/1978
C377A	N/A	Internal Memo from V. L. Avona to W. W. Rodenburg, et all, dated March 15, 1968; titled "Movement of Fissionable Material into Room R131-133."	V. L. Avona	3/15/1968

Implementing Document: MP-TRUW-8.13

TRACKING NUMBER	DOCUMENT NUMBER	DOCUMENT TITLE/DESCRIPTION	DOCUMENT AUTHOR	DOCUMENT DATE
C378A	N/A	Internal Memo from R. M Watrous to R. K. Blauvelt dated October 3, 1977; titled "Operating Procedures and Criticality Precautions for the SW Cave Area, SW-22."	R. M Watrous	10/3/1977
C379A	N/A	Internal Memo from J. D. Hastings to W. P Davis, dated July 19, 1977; titled "Procedure for Handling and Testing Aluminum Clad U235 Fuel Plates".	J.D. Hastings	7/19/1977
C380A	N/A	Internal Memo from W. P. Davis to W. Bigler, et. al, dated March 28, 1977; titled "New Isotopes."	W. P. Davis	3/28/1977
C381A	N/A	Internal Memo from R. K. Blauvelt to W. T. Cave, dated November 24, 1976; titled "Report on the Formal Nuclear Criticality Safety Review.	R. K. Blauvelt	11/24/1976
C382A	N/A	Internal Memo from R. M Watrous to R. K. Blauvelt, dated September 9, 1976; titled "Operations in SW-22 After Proposed Thorium-229 Facility is in Operation."	R. M Watrous	9/9/1976
C383A	N/A	Internal Memo from W. Stringham to R. K. Blauvelt, dated January 9, 1976; titled "Repackaging U-233 Oxide."	W. Stringham	1/9/1976
C384A	N/A	Internal Memo from H. R. Kreider to B. E. Baughn, dated July 29, 1975; titled "Verification Program Procedures, Rocky Flats Samples."	H. R. Kreider	7/29/1975
C385A	N/A	Internal Memo from W. W. Rodenburg to R. K. Blauvelt, et all, dated April 3, 1974; titled "Nuclear Criticality Procedures for Calorimetry of Plutonium Nitrate Solutions."	W. W. Rodenburg	4/3/1974
C386A	N/A	Internal Memo from H. B. Kreider to H. F. Anderson, dated January 8, 1980; titled "Storage of Loaded MHW Shipping Containers."	H. B. Kreider	1/8/1980
C387A	N/A	Internal Memo from R. A. Wolfe to G. R. Grove, dated April 30, 1969; titled "Audit of the Nuclear Criticality Safety Practices and Procedures in the SW Building."	R. A. Wolfe	4/30/1969
C388A	N/A	Internal Memo from R. A. Wolfe to G. R. Grove, dated March 13, 1968; titled "Audit of the Nuclear Criticality Safety Practices and Procedures in the SW and R Buildings."	R. A. Wolfe	3/13/1968
C389A	N/A	Internal Memo from R. A. Wolfe to G. R. Grove, dated January 15, 1968; titled "Audit of the Nuclear Criticality Control Safety Practices and Procedures in the SW-Addition."	R. A. Wolfe	1/15/1968

Implementing Document: MP-TRUW-8.13

TRACKING NUMBER	DOCUMENT NUMBER	DOCUMENT TITLE/DESCRIPTION	DOCUMENT AUTHOR	DOCUMENT DATE
C390A	N/A	Internal Memo from J. S. Wahle to G. R. Grove, dated March 3, 1967; titled "Audit of the Nuclear Safety Procedures and Practices of the SM Building."	J. S. Wahle	3/3/1967
C391A	N/A	Internal Memo from J. B. Kahle to E. A. Renbold dated February 10, 1967; titled Audit of the Nuclear Safety Procedures and Practices in T-3.	J. B. Kahle	2/10/1967
C392A	N/A	Internal Memo from J. B. Kahle to G. A. Essig, dated February 10, 1967; titled "Audit of the Nuclear Safety Practices and Procedures in T-1 and T-4."	J. B. Kahle	2/10/1967
C393A	N/A	Internal Memo from J. B. Kahle to G. R. Grove, dated January 31, 1967; titled "Audit of the Nuclear Safety Procedures and Practices in R-143 and R-149."	J. B. Kahle	1/31/1967
C394A	N/A	Internal Memo from J. B. Kahle to L. B. Gnagey, dated January 16, 1967; titled, "Audit of the Nuclear Safety Procedures and Practices – Neutron Source Facility in the SW-Building."	J. B. Kahle	1/16/1967
C395A	N/A	Internal Memo from J. B. Kahle to J. R. Bradley, dated April 18, 1966; titled "Audit of Nuclear Safety Procedures and Practices of the SM-Building –SM-28, SM-39, SM-57, SM-58, SM-59 and SM-60."	J. B. Kahle	4/18/1966
C396A	N/A	Internal Memo from J. B. Kahle to G. A. Essig, dated March 12, 1965; titled "Criticality Audit – Storage Vaults."	J. B. Kahle	3/12/1965
C397A	N/A	Internal Memo from L. F. Rodriguez to W. T. Cave, dated September 24, 1973; titled "Report on Formal Criticality Safety Review."	L. F. Rodriguez	09/24/1973
C398A	N/A	Internal Memo from J. W. Doty to L. F. Rodriguez, dated August 22, 1973; titled "Criticality Procedure – Maintenance Work on Criticality Alarm Systems."	J. W. Doty	8/22/1973
C399A	N/A	Internal Memo from L. F. Rodriguez to R. A. Neff, dated July 19, 1973; titled "Operating Procedures for Building 42."	L. F. Rodriguez	7/19/1973
C400A	N/A	Internal Memo from R. A. Neff to L. F. Rodriguez dated June 22, 1973; no title.	R. A. Neff	6/22/1973
C401A	N/A	Internal Memo from L. F. Rodriguez to J. W. Doty dated July 19, 1973; titled Operating Procedures for SM-PP Bunker."	L. F. Rodriguez	7/19/1973
C402A	N/A	Internal Memo from J. W. Doty to L. F. Rodriguez, dated July 13, 1973; titled "Residue Storage, SM-PP Bunker."	J. W. Doty	07/13/1973

Implementing Document: MP-TRUW-8.13

TRACKING NUMBER	DOCUMENT NUMBER	DOCUMENT TITLE/DESCRIPTION	DOCUMENT AUTHOR	DOCUMENT DATE
C403A	N/A	Internal Memo from L. F. Rodriguez to R. U. McMannon, dated July 19, 1973; titled "Operating Procedures for R-199 and T-16."	L. F. Rodriguez	7/19/1973
C404A	N/A	Internal Memo from L. F. Rodriguez to J. W. Doty, dated July 19, 1973; titled "Operating Procedures for T-245 Storage Area."	L. F. Rodriguez	7/19/1973
C405A	N/A	Internal Memo from L. F. Rodriguez to W. W. Rodenburg dated July 16, 1973; titled "Criticality Informal Review."	L. F. Rodriguez	7/16/1973
C406A	N/A	Operating Procedures for West Criticality Vault – T-2W, Revised July, 1973	N/A	7/1/1973
C407A	N/A	Internal Memo from L. F. Rodriguez to D. R. Spangler, dated June 15, 1973; titled "SW Criticality Informal Review."	L. F. Rodriguez	6/15/1973
C408A	N/A	Internal Memo from R. S. Grimm to L. F. Rodriguez, dated June 12, 1973; titles "Criticality Procedure Building 23 MRC Pu-238 Scrap Declaration # 4."	L. F. Rodriguez	6/12/1973
C409A	N/A	Internal Memo from T. C. Elswick to L. F. Rodriguez, dated May 23, 1973; titled "Operating Descriptions of the A-2 Sphere Production Facility (PP-Building)."	L. F. Rodriguez	5/23/1973
C410A		Internal Memo from W. A. Arnold to R. D. Madding, dated July 10, 1969; titled "Nuclear Criticality Safety and Packaging Survey of Mound Laboratory." ()	W. A. Arnold	07/10/1969
C411A	N/A	Internal Memo from J. W. Doty to W. T. Cave, dated July 27, 1977; titled "TR # 161 Visit SRL on July 19, 1977 and ORNL on July 20, 1977."	J. W. Doty	7/27/1977
C412A	N/A	Internal Memo from R. K. Blauvelt to J. W. Doty dated March 23, 1977; titled "Building 50 Room 116 Storage Area."	R. K. Blauvelt	3/23/1977
C413A	N/A	Operating Procedure for Building 50 – Cell III, September 1977 and October 1979.	N/A	MULTIPLE
C414A	N/A	Internal Memo from C. O. Brewer to R. K. Blauvelt dated November 17, 1976; titled "Criticality Procedures – Criticality Committee."	C. O. Brewer	11/17/1976
C415A	TR-186	Internal Memo from K. V. Gilbert to D. P. Kelly, dated August 5, 1974; titled "TR-186 – Transuranic Waste Discussions, Idaho Operations Office, July 31-August 1, 1974." (TR-186)	K. V. Gilbert	8/5/1974

Implementing Document: MP-TRUW-8.13

TRACKING NUMBER	DOCUMENT NUMBER	DOCUMENT TITLE/DESCRIPTION	DOCUMENT AUTHOR	DOCUMENT DATE
C416A	N/A	External Memo to R. K. Flitcraft, Monsanto Research Corp: Shipment of Transuranic Waste From Mound Laboratory to the NRTS	D. Davis, US Atomic Energy Commission	08/14/1974
C417A	N/A	Internal Memo from T. C. Elswick to L. F. Rodriguez dated July 12, 1974; titled "Operating Procedures for A-2 (PP-Building) PuO2 Fuel Production Facility."	T. C. Elswick	7/12/1974
C418A	N/A	Internal Memo from J. W. Doty to L. F. Rodriguez, dated July 16, 1973; titled "Storage Room 27, SM/PP Area."	J. W. Doty	7/16/1973
C419A	N/A	Internal Memo from T. C. Elswick to L. F. Rodriguez, dated May 23, 1973; titled "Operating Descriptions of the A-2 Sphere Production Facility (PP-Building)."	T. C. Elswick	05/23/1973
C420A	N/A	Internal Memo from J. W. Doty to L. F. Rodriguez dated July 11, 1973; titled "PP-100 Storage Area."	J. W. Doty	7/11/1973
C421A	N/A	Internal Memo from J. W. Doty to D. A. Edling, dated November 15, 1971; titled "PP-100 Storage."	J. W. Doty	11/15/1971
C422A	N/A	Internal Memo from D. A. Edling to J. W. Doty, dated July 15, 1971; titled "Criticality Committee Review."	D. A. Edling	7/15/1971
C423A	N/A	Internal Memo from W. R. Harris to R. A. Wolfe, dated June 5, 1969; titled "Deviation of Technical Manual MD-10075 Criticality Precautions in the PP Building Request."	W. R. Harris	6/5/1969
C424A	N/A	Internal Memo from W. R. Amos to R. A. Wolfe, dated January 13, 1969; titled "Criticality Limits – PP A-3."	W. R. Amos	1/13/1969
C425A	N/A	Internal Memo from F D. Lonadier to R. A. Wolfe, dated March 3, 1967; titled "Increase of Criticality Limits for SM-37 Vault."	F D. Lonadier	3/3/1967
C426A	N/A	External Memo from R. K. Blauvelt of Mound to M. M. Warrant of Sandia National Laboratories, dated August 26, 1983; no title.	R. K. Blauvelt	08/26/1983
C427A	N/A	Internal Memo from J. F. Lemming to R. Blauvelt, dated July 24, 1979; titled "Analytical Sample Selection for Pu Isotopic Analysis of PuO2 samples DZO-35-09-001 and YEC."	J. F. Lemming	7/24/1979
C428A	N/A	External Memo from D. A. Edling of Mound to H. N. Hill of US-DOE, dated February 26, 1979; titled "Fissile Material Loading of TRU Shipments."	D. A. Edling	02/26/1979

Implementing Document: MP-TRUW-8.13

TRACKING NUMBER	DOCUMENT NUMBER	DOCUMENT TITLE/DESCRIPTION	DOCUMENT AUTHOR	DOCUMENT DATE
C429A	N/A	Internal Memo from J. V. Dichiaro to R. Blauvelt, dated May 8, 1978; titled "Pu-239 Experiments in PP-113."	J. V. Dichiaro	5/8/1978
C430A	N/A	Internal Memo from R. K. Blauvelt to R. A. Neff, dated November 1, 1977; titled "Nuclear Criticality Procedures for T-Building Room 245."	R. K. Blauvelt	11/1/1977
C431A	N/A	Internal memo from J. W. Doty to R. A. Wolfe, dated September 24, 1969; no title.	J. W. Doty	9/24/1969
C432A	N/A	Internal Memo from A. F. Schmidt to D. A. Edling dated May 23, 1972; titled 239Pu-Be Destructive Program."	A. F. Schmidt	5/23/1972
C433A	N/A	Internal Memo from A. F. Schmidt to D. A. Edling, dated June 7, 1972; titled "239Pu-Be neutron Sources Handling and Storage in T-242 and T-277."	A. F. Schmidt	6/7/1972
C434A	N/A	Internal Memo from A. F. Schmidt to D. A. Edling, dated January 22, 1973; titled "239-Pu-Be Neutron Source Handling and Storage Procedure for T-242."	A. F. Schmidt	1/22/1973
C435A	N/A	Internal Memo from L. F. Rodriguez to L. G. Musen, dated October 30, 1973; titled "Operating Procedures for T-16."	L. F. Rodriguez	10/30/1973
C436A	N/A	Internal Memo from J. W. Doty to L. F. Rodriguez, dated July 19, 1974; titled "T-242 Storage Area."	J. W. Doty	7/19/1974
C437A	N/A	Internal Memo from A. F. Schmidt to R. K. Blauvelt, dated October 18, 1976; titled "Pu-238 Relocation (T-242)".	A. F. Schmidt	10/18/1976
C438A	N/A	Internal Memo from H. B. Kreider to R. K. Blauvelt, dated October 3, 1978; titled "MWG Heat Sources."	H. B. Kreider	10/3/1978
C439A	N/A	Internal Memo from J. F. Lemming to R. K. Blauvelt, dated June 28, 1978; no title.	J. F. Lemming	6/28/1978
C440A	N/A	Internal Memo from J. W. Doty to L. F. Rodriguez, dated July 11, 1973; titled "T-245 Storage Area".	J. W. Doty	7/11/1973
C441A	N/A	Internal Memo from T. B. Rhinehammer to D. H. Wolfe, dated January 27, 1967; titled "High Wattage Water Bath Calorimeter".	T. B. Rhinehammer	1/27/1967
C442A	N/A	Internal Memo from T. B. Rhinehammer to R. A. Wolfe, dated February 2, 1967; titled "Operating Procedures for High Wattage Water Bath Calorimetry in T-316".	T. B. Rhinehammer	2/2/1967

Implementing Document: MP-TRUW-8.13

TRACKING NUMBER	DOCUMENT NUMBER	DOCUMENT TITLE/DESCRIPTION	DOCUMENT AUTHOR	DOCUMENT DATE
C443A	N/A	Internal Memo from E. T. Kirk to D. A. Edling, dated September 22, 1971; titled "SW Criticality Review Reply."	E. T. Kirk	9/22/1971
C444A	N/A	Internal Memo from D. A. Edling to D. P. Kelly, dated April 23, 1971; titled "Criticality Review of Operating Procedures."	D. A. Edling	4/23/1971
C445A	N/A	Internal Memo from D. A. Edling to W. W. Rodenburg, dated August 19, 1971; titled "Criticality Committee Review."	D. A. Edling	8/19/1971
C446A	N/A	Internal Memo from W. W. Rodenburg to Criticality Committee, dated November 4, 1971; titled "Revised Criticality Procedures for R-111".	W. W. Rodenburg	11/4/1971
C447A	N/A	Internal Memo from D. A. Edling to J. E. Selle, dated June 2, 1971; titled "Criticality Committee Review."	D. A. Edling	6/2/1971
C448A	N/A	Internal Memo from D. A. Edling to R. R. Jaeger, dated December 6, 1972; titled "Criticality Committee Review."	D. A. Edling	12/6/1972
C449A	N/A	Internal Memo from D. R. Rogers to D. A. Edling, dated November 13, 1972; titled "Pu-239 Criticality Procedure R-129."	D. R. Rogers	11/13/1972
C450A	N/A	Internal Memo from C. T. Bishop to R. A. Wolfe, dated December 13, 1967; titled "Preparation of Mixed Oxides of Plutonium 239 and Uranium 238."	C. T. Bishop	12/13/1967
C451A	N/A	Internal Memo from D. R. Billing to D. R. Spangler, dated May 11, 1971; titled "Decontamination of W55 and W56 Parts."	D. R. Billing	5/11/1971
C452A	N/A	Internal Memo from R. M. Watrous to R. A. Wolfe, dated January 17, 1969; no title.	R. M. Watrous	1/17/1969
C453A	TV-002-205	Memorandum to file from Tim Venneman "Estimated Percentage of Plutonium in Firebrick Debris Waste Stream BN161, November 30, 2005." (TV-002-205)	Tim Venneman	11/30/2005
C454A	N/A	Memorandum to file from Tim Venneman "Estimated Percentage of Ferrous and Non-Ferrous Metals and CPR in Firebrick Debris Waste Stream BN161, November 30, 2005"	Tim Venneman	11/30/2005
C455A	N/A	Letter from L. B. Sonnenberg, Miller Wilson Laboratory for Chemical Research to Neil Watson "Hydrogen Diffusivity Test of Eight Drill Filter Vents"	L. B. Sonnenberg	1/25/2003
C456A	N/A	Letter to Dr. Rod Arbon, "Hydrogen Diffusion Rates of NucFil-020/EG&G Drum Vent Filters Lots A through P"	Terry Wickland	8/9/2003

Implementing Document: MP-TRUW-8.13

TRACKING NUMBER	DOCUMENT NUMBER	DOCUMENT TITLE/DESCRIPTION	DOCUMENT AUTHOR	DOCUMENT DATE
C457A	MLJ-006-2005	Memorandum from M. L. Johnson to File, "Estimation of Percentages of Ferrous And Non-Ferrous Metals And Cellulosics, Plastic, And Rubber (CPR) Waste Materials In The Mound Debris Waste (BN304)." MLJ-006-2005, November 27, 2005. Revised as MLJ-008-2005, December 28, 2005. (MLJ-006-2005)	M. L. Johnson	12/28/2005
C458A	N/A	Interview of Ron Sohn, Mound Employee, Re: TRU Waste Generation. J. L. McTaggart, B. Gutierrez, June 4, 2003, revised June 8, 2004.	J. L. McTaggart, B. Gutierrez	6/8/2004
C459A	VSS-012-2005	Memorandum to file from Vivian Sendelweck "Estimated Percentage of Plutonium in Special Setups BN004 Waste Stream BN004." (VSS-012-2005)	Vivian Sendelweck	11/12/2005
C460A	VSS-013-2005	Estimated Percentages of Ferrous and Non-Ferrous Metals and Cellulosics, plastic, and Rubber (CPR) in Special Setups Waste Stream BN004 (VSS-013 -2005)	Vivian Sendelweck	11/12/2005
C461A	N/A	Interview with Bill Franze conducted by Jerri McTaggert, Ben Gutierrez, and Dick Blauvelt, dated March 4, 2003.	Jerri McTaggert, Ben Gutierrez, and Dick Blauvelt	03/04/2003
C462A	N/A	Interview with Dan Hopkins conducted by Ben Guttierrez, dated April 21-24, 2003 regarding Site History at Mound	Ben Guttierrez	04/21/2002
C463A	N/A	Interview with Dick Blauvelt, performed by Ben Gutierrez, dated April 21-24, 2003.	Ben Gutierrez	04/21/2002
C464A	N/A	Interview with Dr. Bernie Kokenge	Performed by Ben Gutierrez, Dick Blauvelt, and Jerri McTaggert	04/24/2003
C465A	CCP #: C008	Interview with Toby Elswick Regarding TRU Waste Generation/Management in SM/PPBuildings (CCP #: C008)	Jerri McTaggert, Ben Gutierrez, Dick Blauvelt, and John Rovansic	05/13/2003

Implementing Document: MP-TRUW-8.13

TRACKING NUMBER	DOCUMENT NUMBER	DOCUMENT TITLE/DESCRIPTION	DOCUMENT AUTHOR	DOCUMENT DATE
C466A	CCP #: C009	Interview with Paul Figgins performed by Ben Gutierrez, Jerri McTaggert, and Dick Blauvelt, dated May 15, 2003 and e-mail from Paul Figgins correcting the interview record. Interview recorded on CCP Record of Communication numbered C009 for Mound waste that was stored at SRS. The interview record and e-mail were provided by CCP. (CCP #: C009)	Ben Gutierrez, Jerri McTaggert, and Dick Blauvelt	05/15/2003
C467A	CCP #: C010	Interview with Clyde J Chong, performed by Ben Gutierrez, Jerri McTaggert, and Dick Blauvelt, dated May 14, 2003. (CCP #: C010)	Ben Gutierrez, Jerri McTaggert, and Dick Blauvelt	05/14/2003
C468A	N/A	Interview with Ron Goss, performed by Jerri McTaggert, dated March 21, 2003 and April 22, 2003.	Jerri McTaggert	03/21/2009
C469A	N/A	Miscellaneous Correspondence Regarding Plutonium-238 Programs, Various Authors, dated 1981.	Various Authors	DATED 1981
C470A		Interview with Al Combs, performed by Jerri McTaggert ()	Jerri McTaggert	05/15/2003
C471A	MB-0348-01	Memo to EPA, T. Martig; Re: PCBs in Oil (MB-0348-01)	R. B. Provencher, DOE-Ohio Field Office	4/23/2001
C472A	CCP #: C019	Interview with Mike Deaton, performed by Ben Gutierrez, Jerri McTaggert and Dick Blauvelt. (CCP #: C019)	Ben Gutierrez, Jerri McTaggert and Dick Blauvelt	06/05/2003
C473A	CCP #: C020	Interview with Don Luthey, performed by Ben Gutierrez, Jerri McTaggert and Dick Blauvelt, dated June 10, 2003. (CCP #: C020)	Ben Gutierrez, Jerri McTaggert and Dick Blauvelt	06/10/2003
C474A	N/A	List of different types of containers.	Greg Van Soest	NONE
C476A	N/A	Two memos to T. L. Clements, from R. N. Rogers titled "Reactivity of Resins (nitrated)". Memo's dated May 18, 1983 and June 9, 1983	R. N. Rogers	5/18/1983
C477A	CCP #: M002	External Memo titled "Chemical Compatibility and Materials List Data Requirements for TRUPACT II Authorized Payload Compliance Plan", to D. Hopkins from P. E. Drez, dated March 25, 1988. (CCP #: M002)	P. E. Drez	3/25/1988
C478A		Memo to R. L. Wainwright: Program to Reduce the Generation of TRU Contaminated Solid Waste.	J. R. McClain	1/23/1975
C479A		Memo to W. W. Hickman: Shipment of Mound Laboratory's Transuranic Wastes to the NRTS for Retrievable Storage	R. A. Wolfe	10/22/1973

Implementing Document: MP-TRUW-8.13

TRACKING NUMBER	DOCUMENT NUMBER	DOCUMENT TITLE/DESCRIPTION	DOCUMENT AUTHOR	DOCUMENT DATE
C480A	VSS-014-2005	Memorandum to Eric Schweinsberg, Guidance on Mound Plywood Spacers (VSS-014-2005)	Vivian Sendelweck	11/17/2005
C481A	CCP #: C012	Interview of Bill Davis, Mound Employee, Re: TRU Waste Management at Mound. (CCP #: C012)	B. Gutierrez, J. Mc Taggart, D. Blauvelt	4/25/2003
C482A	NR: IBO-05/023	Evaluation of Naval Reactors Facility Radioactive Waste Disposed of at the Radioactive Waste Management Complex, Forwarding of; S. L. Dunn, Manager Naval Reactors Idaho Branch Office; NR: IBO-05/023; February 3, 2005 (NR: IBO-05/023)	S. L. Dunn	02/03/2005
C483A		Idaho TRU Waste Criteria	R. K. Blauvelt	9/19/1980
C484A	RMS-61-81	Change Notice of Off Site Packaging Criteria Report IDO-10074 (RMS-61-81)	R. M. Schletter	5/13/1981
C485A		Memo to B. G. Twining: Mound TRU Waste Shipments to INEL	J. A. Morley	10/21/1988
C486A		WTS Line Removal Problems/Suggestions	W. P. Davis	10/23/1981
C487A		E-Mail Correspondence to Jeff Harrison re: SR-MD-SOIL supplemental Information	Steve Rose	8/10/2005
C488A		Memo to L. R. Baird: Comprehensive Environmental Response, Compensation and Liability Information System	R. M. Munson	03/00/1986
C489A		Memo to P. Porter: Transmittal of Mound Waste Box Evaluation	J. Biedscheid	7/14/2000
C490A	TGR-46-94	Letter to M. Gilliat: Transmittal of Tabled Writeup-93, and Revised Building 38 FASR Chapter 5 (TGR-46-94)	T. G. Ryan	11/30/1993
C491A		Memo to to J. R. Craig: TRU Waste Box, Safety Assessment	R. B. Provencher	12/3/2002
C492A		Discrepancy Report – Soil with Smaller Amounts of Debris, DR006	Jeff Harrison	8/30/2005
C493A	DR001	Discrepancy Report –EPA Codes (DR001)	J. Harrison	8/24/2005
C494A	DR005	CCP Discrepancy Report for all waste streams in SRS-AK-8 (DR005)	J. Harrison	8/24/2005
C495A		Internal Memo to W. P Davis and T. C. Elswick re: SAND Boxes	R. K. Blauvelt	9/3/1982
C496A		Memo to R. M. Schletter: Request for Approval	R. K. Blauvelt	2/27/1981
C497A	RHB-263-81	Letter to R. K. Blauvel: Change Notice of Offsite Packaging Criteria (IDO-10074) for Revised Metal Container Painting Requirements – (RHB-263-81)	R. H. Beers	8/11/1981

Implementing Document: MP-TRUW-8.13

TRACKING NUMBER	DOCUMENT NUMBER	DOCUMENT TITLE/DESCRIPTION	DOCUMENT AUTHOR	DOCUMENT DATE
C498A		E-mail to HERTFR@doe-md.gov: Regarding Emailing: space-desc	Hertweck (hertweck@brecnet.com)	2/1/2002
C499A	MLJ-004-08	Memo to File: Waste Stream Volumes and Waste Material Parameter Densities for Annual Transuranic Waste Inventory Report Update (MLJ-004-08)	M. L. Johnson	10/22/2008
C502A	CKA-012-2005	Memorandum to Jeff Mousseau, Acceptable Knowledge Accuracy Assessment (CKA-012-2005)	Steve Carpenter, Carolyn Abbott, Vivian Sendelweck	8/25/2005
C503A	RCM-001-2006	Reason for observation of octamethylcyclotetrasiloxane as a TIC in BN510 drums; Randall C. Morris and Jessie Melton; 01/30/2006 (RCM-001-2006)	Randall C. Morris and Jessie Melton	1/30/2006
C504A	N/A	Look-Up Table Additions	Vincent J Medina	01/31/2006
C505A		Record of interview/telecon with Dick Blauvelt, Unknown objects identified in waste drums generated at Mound Plant	Carolyn Abbott	2/17/2006
C506A	SPC-017-2005	Interoffice Memorandum to AMWTP Site Project Managers, "Guidelines for AK Verification of Cs-137 and Sr-90 in RFETS Waste per AKR-05-208" (SPC -017-2005)	Steve Carpenter	03/01/2005
C507A	EPS-007-2006	Interoffice Memorandum, "AMWTP Containers with a WTS Pack Date of 1/1/50,". (EPS-007-2006)	Eric Schweinsberg	3/24/2006
C508A	WRT-MTS-96-3026	Letter from J W. Congdon, Westinghouse Savannah River Company to Dr. James Herzog, Lockheed Idaho Tech, Co. Physical Behavior of Pu-238 Oxide (U), WRT-MTS-96-3026, October 17, 1996. (WRT-MTS-96-3026)	J W. Congdon	10/17/1996
C509A	CKA-010-2005	Memorandum from Carolyn Abbott and Steve Carpenter to Vince Medina, Rocky Flats (RF) Boxed Filter Waste, IDC 490 and Clarification of the RF Boxed Filter Waste (IDC RF 490) Issue (CKA-006-2005) (CKA-010-2005)	Steve Carpenter and Carolyn Abbott	09/08/2005
C510A	N/A	Roaster Oxide Information, from Julie Collins to distribution	Julie Collins	12/31/2005
C511A	N/A	Record of interview/telecon with Vince Medina, "Permeability of FibrePaks"	Randall C. Morris	3/22/2006

Implementing Document: MP-TRUW-8.13

TRACKING NUMBER	DOCUMENT NUMBER	DOCUMENT TITLE/DESCRIPTION	DOCUMENT AUTHOR	DOCUMENT DATE
C512A	CKA-003-2005	Memorandum from Carolyn Abbott (AKE) to Eric Schweinsberg (SPM), Addition of Methyl Chloride (Chloromethane) as a targe Analyte in Headspace Gas Analyses of BNINW216 and BNINW218 Waste (CKA-003-2005)	Carolyn Abbott	7/13/2005
C513A	CKA-004-2005	Memorandum from Carolyn Abbott (AKE) to Eric Schweinsberg (SPM), Addition of Methyl Chloride (Chloromethane) as a target Analyte in Headspace Gas Analyses of BN835 Waste (CKA-004-2005)	Carolyn Abbott and Eric Schweinsberg	7/14/2005
C515A	CKA-015-2005	Interoffice Memorandum from Carolyn Abbott (Acceptable Knowledge Expert), Waste Matrix code and Waste Parameter Guidance (CKA-015-2005)	Carolyn Abbott	9/30/2005
C516A	CKA-017-2006	Interoffice Memorandum from Carolyn Abbott (Acceptable Knowledge Expert) to E. Ned Doan, "Evaluation of Acceptable Knowledge Regarding the Presence of Shock Sensitive Materials in AMWTP Managed Waste Containers - CKA-017-2006" (CKA-017-2006)	Carolyn Abbott	3/1/2006
C517A	CKA-018-2006	Interoffice Memorandum from Carolyn Abbott (Acceptable Knowledge Expert), Steve Carpenter (Acceptable Knowledge Expert), and Martin Clapham (Nondestructive Assay Acceptable Knowledge Expert)to Dan Croft (Treatment Facility Manager), Charles Posegate (Nuclear Facility Manager), and Doug Wale (Operations Manager), "Mound Laboratory Plutonium-238 Containing Waste - CKA-018-2006" (CKA-018-2006)	Carolyn Abbott (Acceptable Knowledge Expert), Steve Carpenter (Acceptable Knowledge Expert), and Martin Clapham (Nondestructive Assay Acceptable Knowledge Expert)	3/14/2006
C518A	MLJ-001-06	Memorandum from M.L. Johnson to File, "Estimation of Percentages fo Ferrous and Non-Ferrous Metals and Cellulosics, Plastic, and Rubber in the Mound Cemented Sludge Waste (BN836)." (MLJ-001-06)	M.L. Johnson	4/25/2006
C519A	MLJ-002-06	Memorandum from M. L. Johnson to File, "Estimated Percentage of Plutonium in Cemented Sludge Waste Stream BN836," MLJ-002-06. April 25, 2006. (MLJ-002-06)	M. L. Johnson	4/24/2006
C520A	N/A	Correspondance from John Smith Ph.D, EPA, to Ms. Lynne Smith, WIPP Office Director, Re: Legacy Solidified TRU/PCB waste.	John H. Smith PhD	2/28/2002
C521A	N/A	Email to Steve Carpenter and Carolyn K. Abbott regarding Nylon Slings; Vincent J. Medina; May 1, 2006	Vincent J. Medina	5/1/2006

Implementing Document: MP-TRUW-8.13

TRACKING NUMBER	DOCUMENT NUMBER	DOCUMENT TITLE/DESCRIPTION	DOCUMENT AUTHOR	DOCUMENT DATE
C522A	GKT-001-06	Container Identification Changes as a Result of Sampling, packaging, Overpacking, Repackaging, and Unknowns from Cell 5 of the Transuranic Storage Area-1 (GKT-001-06)	Gina Tedford	5/15/2006
C523A	MLJ-007-06	Estimated Percentage of Plutonium in Mound Debris Waste Stream BN304, M. L. Johnson, MLJ-00X-06, 6/14/2006 (MLJ-007-06)	M. L. Johnson	6/14/2006
C524A	N/A	Correspondance from Mound Environmental personnel in reference to questions pertaining to MD836 wastes.	Tim Venneman	2/15/2006
C525A	N/A	Correspondence from Mound Environmental personnel in reference to questions pertaining to MD836 wastes. 2/15/06	Mound Environmental personnel	2/15/2006
C526A	CCN 06-20243, JDM-032-06	Letter to Mr. Kerry Watson with the subject: Contract No. DE-AC07-99ID13727 – Mound Debris Waste, Jeffrey D. Mousseau, JDM-032-06, 5/31/2006 (CCN 06-20243, JDM-032-06)	Jeffrey D. Mousseau	5/31/2006
C527A	CBFO:OCT:KWW:KJB:06-0411:UFC:5822	Letter to Elizabeth Sellers, DOE-ID Manager, Recertification of INL AMWTP Authority for Homogeneous Solids (S3000) Waste – Audits A-05-17 and A-05 -21, David C. Moody, February 10, 2006 (CBFO:OCT:KWW:KJB:06-0411:UFC:5822)	David C. Moody	2/10/2006
C528A	CBFO:QA:MPN:LC:06-0282:UFC:2300	Letter to Mr. Steve Zappe, NMED, Transmittal of the Certification Audit Report for the AMWTP, Audit A-06-09, David C. Moody, April 20, 2006 (CBFO:QA:MPN:LC:06-0282:UFC:2300)	David C. Moody	4/20/2006
C529A	TV-013-06	Memorandum to file, Advanced Mixed Waste Treatment Project Acceptable Knowledge Accuracy Report 08/01/05 through 07/31/06 - TV-013-06, Tim Venneman, August 14, 2006 (TV-013-06)	Tim Venneman	8/14/2006
C530A	JWS-002-06	Memorandum to C. IK. Abbott, Visual Examination Confirmation of item description Code RF-339, J. W. Shainholtz, JWS-002-06, August 23, 2006 (JWS-002-06)	J. W. Shainholtz	8/23/2006
C531A	CKA-004-2006	Memorandum to File, Acceptable Knowledge Assessment of the Potential Presence of Prohibited Items in Waste Stream BN252 (Item Description Code DC 339 and Item Description Code 463) Leaded Rubber Debris, Carolyn Abbott (CKA-004-2006)	C.K.Abbott	9/12/2006
C532A	KL-001-2006	Memorandum to Certification Leads, et al., SPO Guidance – 30-gallon Drums in Mound Debris Containers Clarification (KL-001-2006)	Kathy Leonard	1/8/2006

Implementing Document: MP-TRUW-8.13

TRACKING NUMBER	DOCUMENT NUMBER	DOCUMENT TITLE/DESCRIPTION	DOCUMENT AUTHOR	DOCUMENT DATE
C533A	TV-014-06	Memorandum to File: Acceptable Knowledge Document for Potentially Asbestos-Contaminated Low-Level Waste (TV-014-06)	Tim Venneman	10/17/2005
C534A	TV-001-07	Memorandum to File: Waste Material Parameter (WMP)Weight Calculations and Supporting Data to Determine Waste Material Parameter Weight per Unit of Waste (TV-001-07)	T. Venneman	01/19/2007
C535A	MLJ-001-08	Memorandum from M L. Johnson to File, Estimated Number Of Drums For The Waste Isolation Pilot Plant Approved Direct Ship Waste Streams, MLJ-008-06, December 13, 2006 Revision to Estimated Number of Drums for Direct Ship Waste Streams, MLJ-001-08, April 24, 2008 Revision Two to Estimated Number of Drums for Direct Ship Waste Streams, MLJ-001-08, June 25, 2008 (MLJ-001-08)	M L. Johnson	6/25/2008
C536A	N/A	Telecon/Interview of Lisa Frost/Ed Vejvoda re: Use of nitrobenzene at Rocky Flats, 2/2/06	Lisa Frost/Ed Vejvoda	02/02/2006
C537A	CBFO:QA:MN:GS:04-0099:UFC 2300.00	Letter from Martin P. Navarrete to Brian Edgerton, DOE-ID, "Audit Report A-04-12, INEEL, Advanced Mixed Treatment Project Audit of Additional Characterization Activities and Transportation Re-certification," April 26, 2004 (CBFO:QA:MN:GS:04-0099:UFC 2300.00)	Martin P. Navarrete	4/26/2004
C538A	CBFO:OCT:KWW:KJB:05-1624:UFC 5822.00	Letter from Lloyd L. Piper to Elizabeth Sellers, DOE-ID, "Recertification of INL AMWTP Authority for Homogeneous Solids (S3000) Waste – Audit A-04-22," October 25, 2005 (CBFO:OCT:KWW:KJB:05-1624:UFC 5822.00)	Lloyd L. Piper	10/25/2005
C539A	N/A	Letter from James P. Bearzi, NMED to Dr. Moody and Mr. Raaz "NMED Approval of the Advanced Mixed Waste Treatment Project Final Audit Report, Audit A-06-09," June 16, 2006	James P. Bearzi	6/16/2006
C540S		Letter from James P. Bearzi, NMED to Dr. Moody and Mr. Raaz "NMED Approval of the Advanced Mixed Waste Treatment Project Final Audit Report, Audit A-06-24," January 23, 2007	James P. Bearzi	1/23/2007
C541S	CBFO:NTP:CF:GS:07-0679:UFC 5822.00	Memorandum from David C. Moody to Elizabeth Sellers, DOE-ID, "Recertification of INL AMWTP Authority for Solids (S3000) and Debris (S5000) Waste – Audits A-06-09, A-06-24, and A-06-25," February 26, 2007 (CBFO:NTP:CF:GS:07-0679:UFC 5822.00)	David C. Moody	2/26/2007

Implementing Document: MP-TRUW-8.13

TRACKING NUMBER	DOCUMENT NUMBER	DOCUMENT TITLE/DESCRIPTION	DOCUMENT AUTHOR	DOCUMENT DATE
C542S	N/A	Slide presentation regarding debris waste to be shipped to AMWTP from Hanford, 3/8/2007	Fluor Hanford	3/8/2007
C543S	CCN 07-30515, CKA-001-07	Memorandum to File: Estimate of compacted volume and number of product drums: Hanford debris waste waste and debris waste from Pits 11 and 12, and the volume of homogeneous solids waste retrieved from Pits 11 and 12. Carolyn K. Abbott, CCN 07-30515, CKA-001-07, August 13, 2007 (CCN 07-30515, CKA-001-07)	Carolyn Abbott	8/13/2007
C544A	N/A	Letter to file re: Contaminated Soil from Retrieval, dated 12/21/04.	B. Warner and Kevin Leavitt	12/21/2004
C545S	N/A	Memorandum from David C. Moody to Elizabeth Sellers, DOE-ID, "Expansion of Certification Authority to Include Manual Drum Coring System Operations" May 23, 2007	David C. Moody	5/23/2007
C546S	CCN 07-30516, TV-001-07	Memorandum to file (CCN 07-30516): Advanced Mixed Waste Treatment Project Acceptable Knowledge Accuracy Assessment August 1, 2006 through June 30, 2007- TV-001-07, Tim Venneman, August 14, 2007 (CCN 07-30516, TV-001-07)	Tim Venneman	8/14/2007
C547S	JHK-002-07, CCN 07-30519	Memorandum to Eric Schweinsberg, Co-Located Core Sample Control Charts, JHK-002-07, CCN 07-30519, August 16, 2007 AMWTP correspondence. (JHK-002-07, CCN 07-30519)	Jason Kettel	8/16/2007
C548S	JHK-002-07, CCN 07-30519	Memorandum to Eric Schweinsberg, Co-Located Core Sample Control Charts, JHK-002-07, CCN 07-30519, August 16, 2007 AMWTP Correspondence (JHK-002-07, CCN 07-30519)	Jason Kettel	8/16/2007
C549A	N/A	Correspondence from C.K. Gaddis to R. Falconer. Transuranic Waste Characterization Questionnaires	C. K. Gaddis, Manager, DOE, Pittsburgh Naval Reactors Office	5/17/1993
C550S	N/A	Interview Record of Vince Medina, :Alternate packaging configuration of IDC RF graphite waste includes Kraft Tubes," September 24, 2007		9/24/2007
C551A	N/A	Estimated Percent of Plutonium in Rocky Flats, AMWTP, and Mound wastes.	Martin Clapham	7/5/2008
C552S	CKA-001-08	Memorandum to file: Acceptable Knowledge Evaluation of Containers with Historical Data Issues (CKA-001-08)	Carolyn K. Abbott, PhD	2/13/2008

Implementing Document: MP-TRUW-8.13

TRACKING NUMBER	DOCUMENT NUMBER	DOCUMENT TITLE/DESCRIPTION	DOCUMENT AUTHOR	DOCUMENT DATE
C554S	N/A	Interview of Roger Haga, MFC Safeguards, Re: Traceability of Defense Materials to Casting Laboratory and Analytical Laboratory	Scott Smith and Dave Guerin	08/31/2005
C555S	N/A	Correspondence to Craig R. Tyler, Lockheed Martin Idaho Technologies Co. re: ANL Transuranic Waste - Definition as Defense Waste	D. S. Kirschner, Manager, Radiation, Fire and Safety	4/16/1997
C557A	N/A	Letter to Monte V. Davis, BBWI re: Evaluation of ANL-W Transuranic (TRU) Waste Stream, Identification Number ANL-WCA-553, Listed in the Site Treatment Plan.	R. P. Grant, NTD Environmental Programs, ANL -W	5/22/2001
C559S	N/A	Correspondence to Mark Matthews, Chairman, Transuranic Waste Steering Committee, Carlsbad Area Office, re: Designation of TRU Waste as Defense or Non-Defense.	Raymond E. Lang, Senior Program Manager Support, Technology Development, and Waste Operations Division.	10/11/1994
C560S	JHK-005-07	Memorandum to Eric Schweinsberg , Co-Located Core Sample Control Charts, JHK-005-07, November 1, 2007 AMWTP correspondence. (JHK-005-07)	Jason Kettel	11/1/2007
C561S	JHK-006-07	Memorandum to Eric Schweinsberg , Co-Located Core SampleF-Test Results , JHK-006-07, November 1, 2007 AMWTP correspondence. (JHK-006-07)	Jason Kettel	11/1/2007
C562S	JHK-007-07	Memorandum to Eric Schweinsberg , Co-Located Core Sample Control Charts, JHK-007-07, December 12, 2007 AMWTP correspondence. (JHK-007-07)	Jason Kettel	12/12/2007
C563S	JHK-008-07	Memorandum to Eric Schweinsberg , Co-Located Core Sample F-Test Results (JHK-008-07)	Jason Kettel	12/12/2007
C564S	JHK-002-08	Memorandum to Eric Schweinsberg , Co-Located Core Sample Control Charts, JHK-002-08, September 2, 2008 AMWTP correspondence. (JHK-002-08)	Jason Kettel	9/2/2008
C565S	JHK-001-08	Memorandum to Eric Schweinsberg , Co-Located Core Sample F-Test Results (JHK-001-08)	Jason Kettel	9/2/2008
C566S	JHK-003-08	Memorandum to Eric Schweinsberg, Acceptable Knowledge Accuracy Report for 7/1/07 to 6/30/08 (JHK-003-08)	Jason Kettel	9/4/2008

Implementing Document: MP-TRUW-8.13

TRACKING NUMBER	DOCUMENT NUMBER	DOCUMENT TITLE/DESCRIPTION	DOCUMENT AUTHOR	DOCUMENT DATE
C567S	CBFO:NTP:NC:GS:08-0883:UFC 5822.00	Memorandum from David C. Moody to Elizabeth Sellers, DOE-ID, "Expansion of AMWTP Recertification to include Container-in-Container Sampling Method – Audit A-08-09," Letter No. CBFO:NTP:NC:GS:08-0883:UFC 5822.00, September 24, 2008 (CBFO:NTP:NC:GS:08-0883:UFC 5822.00)	David C. Moody	9/24/2008
C568S	N/A	E-mail to Steve Carpenter (AMWTP AK TRU Programs): AMWTP Macro Rejects – PFNW	James B. Zovi (AMWTP Offsite LLW/MLLW Disposition Project)	10/2/2008
C574S	N/A	Correspondence to Mr. Dennis Wilkinson, RWMC/SWEP re: TRU Waste at Argonne National Laboratory-East	J. R. Thuot, Manager, Waste Management	05/17/1990
C576S	N/A	Email to Diane M. Hartley re: ANL-W containers with an IDC of 160.	Curtis M. Reece	8/16/2001
C579A	N/A	Email to Carolyn Abbott transmitting a Synopsis of 553.doc; CH_ANL_553.doc.	R. P. Grant	10/14/2008
C580A	N/A	Email to Carolyn Abbott transmitting background information on MLLW HFEF WCA Drums.	R. P. Grant	10/14/2008
C581A		Email to Kevin Streeper Requesting information re: the 21 "Resin Vaults" located in the TSA-RE, Pad-1, Cell 8 area.	Stephen Obert	4/16/2008
C586S	N/A	Email to Carolyn K. Abbott re: IDC 157	Christopher Major	7/10/2001
C587A	N/A	Email to Carolyn Abbott re: Flowchart	Roy P. Grant, MFC	7/25/2008
C592S	CBFO:NTP:KWW:JGW:04-1983:UFC:5822	Memorandum to Elizabeth Sellers, Amendment of Authority Granted to INEEL AMWTP for Characterization and Certification of Contact Handled Homogenous Solids Transuranic Waste (CBFO:NTP:KWW:JGW:04-1983:UFC:5822)	R. Paul Detwiler	9/17/2004
C593S	CBFO:QA:MPN:LC06-0280:UFC:2300	Memorandum to Guy Girard, QA and NDA Audit A-06-10 of the INL AMWTP Recertification Audit (CBFO:QA:MPN:LC06-0280:UFC:2300)	Martin P. Navarrete	4/12/2006
C594S	CBFO:QA:MPN:LC:06-1185:UFC:2300	Letter to Mr. Zappe, Transmittal of the Certification Audit Report for the AMWTP Audit A-06-24 (CBFO:QA:MPN:LC:06-1185:UFC:2300)	David C. Moody	10/12/2006
C595S	CBFO:QA:MPN:LC:06-1158:UFC:2300	Memorandum to Guy Girard, Audit Report for TRU Waste Characterization and Certification of the AMWTP at the INL (CBFO:QA:MPN:LC:06-1158:UFC:2300)	Martin P. Navarrete	9/14/2006

Implementing Document: MP-TRUW-8.13

TRACKING NUMBER	DOCUMENT NUMBER	DOCUMENT TITLE/DESCRIPTION	DOCUMENT AUTHOR	DOCUMENT DATE
C596S	CBFO:QA:MPN:LC:07-0284:UFC:2300	Memorandum to Bill Lattin, CBFO Surveillance Report S-07-21 of the AMWTP Manual Drum Coring Operations (CBFO:QA:MPN:LC:07-0284:UFC:2300)	Martin P. Navarrete	4/12/2007
C597S	CBFO:QA:DSM:LC:07-1627:UFC:2300	Memorandum to Bill Lattin, Audit Report A-07-15, TRU Waste Characterization and Certification of the AMWTP (CBFO:QA:DSM:LC:07-1627:UFC:2300)	Martin P. Navarrete	9/10/2007
C598S	CBFO:QA:MPN:LC:07-1647:UFC:2300	Letter to Mr. Zappe, Transmittal of the Certification Audit Report A-07-14 of the AMWTP (CBFO:QA:MPN:LC:07-1647:UFC:2300)	David C. Moody	9/27/2007
C599S		Letter to Dr. Moody and Mr. Sharif, NMED Approval of the Advanced Mixed Waste Treatment Project Final Audit Report, Audit A-07-14	James P. Bearzi	1/18/2008
C600S	CBFO:NTP:NC:GS:08-0611:UFC 2300.33	Memorandum from David C. Moody to Elizabeth Sellers, DOE-ID, "Recertification of INL AMWTP Audits A-07-14 and A-07-15," CBFO:NTP:NC:GS:08-0611:UFC 2300.33, February 20, 2008 (CBFO:NTP:NC:GS:08-0611:UFC 2300.33)	David C. Moody	2/20/2008
C601A		Letter to John Medema, DOE-ID, from William Franz, transmittal of maps of the Mound site, September 19, 2003	DOE-ID.	9/19/2003
C602A	JMB-16-87	Interoffice Correspondence to J. D. Wells, re: SWEPP Examination of B&W Greater than Class C. Waste. (JMB-16-87)	J. M. Bower	04/24/1987
C603A	N/A	Intra-Laboratory Memo to C. C. Dwight, ANL-W AK Preparation Project Manager from R. P. Grant and G. P. Hackett re: ANL-W Transuranic Waste Drums Sent to RWMC, January 18, 1999.	R. P. Grant and G. P. Hackett	1/18/1999
C604A	N/A	Intra-Laboratory Memo to W. P. Keeney re: Procurement of Uranium Feedstock for FMF Production	L. C. Walters and D. B. Tracy	9/15/1989
C605A	MLJ-002-2009	Memorandum to File, Waste Material Parameter Weight per Unit Waste Calculations for Proposed BN222 Waste Stream (MLJ-002-2009)	M.L. Johnson	09/15/2009
C606S	CBFO:QA:MPN:KBS:08-0376:UFC 2300.00	Memorandum to file, Letter from David C. Moody, CBFO to Mr. Steve Zappe, NMED, Transmittal of the Carlsbad Field Office Final Audit Report A-08-09 of the Advanced Mixed Waste Treatment Project, July 10, 2008. (CBFO:QA:MPN:KBS:08-0376:UFC 2300.00)	David C. Moody, CBFO	7/10/2008

Implementing Document: MP-TRUW-8.13

TRACKING NUMBER	DOCUMENT NUMBER	DOCUMENT TITLE/DESCRIPTION	DOCUMENT AUTHOR	DOCUMENT DATE
C607A	N/A	Letter from the Fredrick R. Dowsett, State of Colorado to Ms. Florence J. Phillips, Kiaser-Hill Company. Use of F039 Listed Hazardous Waste Designation. February 21, 1996	Fredrick R. Dowsett, State of Colorado	2/21/1996
C608S	CBFO:NTP:NC:GS:08-0883:UFC:5822.00	Memorandum to Elizabeth Sellers, Expansion of AMWTP Recertification to include Container –in-Container Sampling Method – Audit A-08-09 (CBFO:NTP:NC:GS:08-0883:UFC:5822.00)	David C. Moody	9/24/2008
C609S	CBFO:QA:MPN:KBS:08-1390:UFC:2300.00	Memorandum to Bill Lattin, Interim Audit Report for Recertification Audit A-08 -19, Advanced Mixed Waste Treatment Program (CBFO:QA:MPN:KBS:08-1390:UFC:2300.00)	Martin P. Navarrete	10/10/2008
C610S	CBFO:QA:MPN:KBS:08-1535:UFC:2300.00	Letter to Mr. Zappe, Transmittal of the Certification Audit report for the Advanced Mixed Waste Treatment Program, Audit A-08-19 (CBFO:QA:MPN:KBS:08-1535:UFC:2300.00)	David C. Moody	11/25/2008
C613S	N/A	Interview of Mike Beranek (former Rocky Flats employee)	N/A	1/14/2009
C614S	N/A	Interview of Rick Moore (former Rocky Flats employee)	N/A	1/14/2009
C615S	N/A	Interview of Mike Brugger (former Rocky Flats employee)	N/A	1/20/2009
C616S	N/A	E-mail concerning RTR examinations of waste in Vollrath cans.	Steve Tallman	1/20/2009
C617A	N/A	Telephone Conversation with Robert J. Hudson, retired RWMC RCT.	Carolyn K. Abbott	02/26/2009
C618A	CKA-001-09	Memorandum to File: Summary of Retrieval Acceptable Knowledge (AK) for Pad R, Cell 1 Waste. (CKA-001-09)	Carolyn K. Abbott	05/21/2009
C620A	MLJ-001-09	Memo to Gina K. Tedford: Waste Stream Volumes and Waste Material Parameter Densities for Annual Transuranic Waste Inventory Report Update (MLJ-001-09)	M. L. Johnson	8/13/2009
C629A	N/A	New IDCs for Squeezants	Neil Brill and Darren Aitken	3/19/2009
C630S	JHK-005-08	Memorandum to Eric Schweinsberg, Co-located Core Sample Control Charts (JHK-005-08)	Jason Kettel	12/15/2008
C631S	JHK-006-08	Memorandum to Eric Schweinsberg: Co-Located Solid Sampling F-Test Results (JHK-006-08)	Jason Kettel	12/15/2008

Implementing Document: MP-TRUW-8.13

TRACKING NUMBER	DOCUMENT NUMBER	DOCUMENT TITLE/DESCRIPTION	DOCUMENT AUTHOR	DOCUMENT DATE
C781A	092908-1	Correspondance from Kevin Lundquist to AK personnl. Ref: Closure of NCR 44395 (092908-1)	Kevin Lundquist, Validation S.S.	4/2/2009
C782A	121108-1	Correspondence from kevin Lundquist to AK personnel. Ref: NCR 44387 closure (121108-1)	Kevin Lundquist, Validation S.S.	4/2/2009
C783A	111208-1	Correspondence from Kevin Lundquist to AK personnel. Ref: closure of NCR 44386 (111208-1)	Kevin Lundquist, Validation S.S.	04/02/2009
C784A	092508-1	Correspondence from Kevin Lundquist to AK personnel. Ref: closure of NCR 44385 (092508-1)	Kevin Lundquist, Validation S.S.	04/02/2009
C785A	112008-1	Correspondence from Kevin Lundquist to AK personnel. Ref: closure of NCR 44384 (112008-1)	Kevin Lundquist, Validation S.S.	04/02/2009
C786A	NT070711R	Correspondence from Kevin Lundquist to AK personnel. Ref: Closure of NCR 44369 (NT070711R)	Kevin Lundquist, Validation S.S.	04/02/2009
C787A	110608-1	Correspondence from Kevin Lundquist to AK personnel. Ref: Closure of NCR 44420 (110608-1)	Kevin Lundquist, Validation S.S.	4/2/2009
C788S	CBFO:NTP:NC:GS:09-0835:UFC 2300.00	Memorandum to Richard Provencher, DOE-ID Assistant Manager, Recertification of INL AMWTP Audit A-08-19 (CBFO:NTP:NC:GS:09-0835:UFC 2300.00)	David C. Moody, CBFO	3/25/2009
C789S	C-2009-0101	Remote Handled Drum Evaluation--JHP-002-09 (C-2009-0101)	James H. Pletscher	3/5/2009
C790S	C-2009-0081	Remote Handled Drum Evaluation-JHP-001-09 (C-2009-0081)	James H. Pletscher	2/18/2009
C791A	111008-2	Correspondence from Kevin Lundquist to AK personnel. Ref: Closure of NCR 44419 (111008-2)	Kevin Lundquist, Valdiation S.S.	4/2/2009
C792A	103008-1	Corrspondence from Kevin Lundquist to AK personnel. Ref: closure of NCR 44400 (103008-1)	Kevin Lundquist, Validation S.S.	4/2/2009
C793A	111808-1(B)	Correspondence from Denny Gasper to AK personnel. Ref: closure of NCR 44418 (111808-1(B))	Denny Gasper, Acting Level I Validation Lead	4/3/2009
C794A	112108-1	Correspondence from Denny Gasper to AK personnel. Ref: closure of NCR 44421 (112108-1)	Denny Gasper, Acting Level I Validation Lead	4/3/2009
C795A	091808-1 CC	Correspondence from Denny Gasper to AK personnel. Ref: closure of NCR 44436 (091808-1 CC)	Denny Gasper, Acting Level I Validation Lead	4/3/2009

Implementing Document: MP-TRUW-8.13

TRACKING NUMBER	DOCUMENT NUMBER	DOCUMENT TITLE/DESCRIPTION	DOCUMENT AUTHOR	DOCUMENT DATE
C796A	092408-2	Correspondence from Denny Gasper to AK personnel. Ref: closure of NCR 44437 (092408-2)	Denny Gasper, Acting Level I Validation Lead	4/3/2009
C797A	111408-1(B)	Correspondence from Denny Gasper to AK personnel. Ref: closure of NCR 44416 (111408-1(B))	Denny Gasper, Acting Level I Validation Lead	4/3/2009
C798A	101008-1	Correspondence from Kevin Lundquist to AK personnel. Ref: closure of NCR 44423 (101008-1)	Kevin Lundquist, Validation S.S.	4/4/2009
C799A	100708-1	Correspondence from Kevin Lundquist to AK personnel. Ref: closure of NCR 44417 (100708-1)	Kevin Lundquist, Validation S.S.	4/4/2009
C800A	100708-1	Correspondence from Kevin Lundquist to AK personnel. Ref: closure of NCR 44415 (100708-1)	Kevin Lundquist, Validation S.S.	4/4/2009
C801A	102208-1	Correspondence from Kevin Lundquist to AK personnel. Ref: closure of NCR 44390 (102208-1)	Kevin Lundquist, Validation S.S.	4/4/2009
C802A	092008-1	Correspondence from Kevin Lundquist to AK personnel. Ref: closure of NCR 44439 (092008-1)	Kevin Lundquist, Validation S.S.	4/4/2009
C803A	102708-1	Correspondence from Kevin Lundquist to AK personnel. Ref: closure of NCR 44438 (102708-1)	Kevin Lundquist, Validation S.S.	4/4/2009
C804A	10106108-1	Correspondence from Kevin Lundquist to AK personnel. Ref: closure of NCR 44435 (10106108-1)	Kevin Lundquist, Validation S.S.	4/4/2009
C805A	111308-1	Correspondence from Kevin Lundquist to AK personnel. Ref: closure of NCR 44434 (111308-1)	Kevin Lundquist, Validation S.S.	4/4/2009
C806A	102008-1	Correspondence from Kevin Lundquist to AK personnel. Ref: closure of NCR 44433, 44432, and 44429 (102008-1)	Kevin Lundquist, Validation S.S.	4/7/2009
C807A	101408-1	Correspondence from Kevin Lundquist to AK personnel. Ref: closure of NCR 44431 (101408-1)	Kevin Lundquist, Validation S.S.	4/4/2009
C808A	111008-1	Correspondence from Kevin Lundquist to AK personnel. Ref: closure of NCR 44397 (111008-1)	Kevin Lundquist, Validation S.S.	4/4/2009
C809A	100708-1	Correspondence from Denny Gasper to AK personnel. Ref: closure of NCR-44440. (100708-1)	Denny Gasper, Validation S.S.	4/5/2009

Implementing Document: MP-TRUW-8.13

TRACKING NUMBER	DOCUMENT NUMBER	DOCUMENT TITLE/DESCRIPTION	DOCUMENT AUTHOR	DOCUMENT DATE
C810A	112208-1	Correspondence from Denny Gasper to AK personnel. Ref: closure of NCR-44462. (112208-1)	Denny Gasper, Validation S.S.	4/5/2009
C811A	110508-1	Correspondence from Denny Gasper to AK personnel. Ref: closure of NCR-44461 (110508-1)	Denny Gasper, Validation S.S.	4/5/2009
C812A	112208-1	Correspondence from Denny Gasper to AK personnel. Ref: closure of NCR-44460. (112208-1)	Denny Gasper, Validation S.S.	4/5/2009
C813A	120108-1	Correspondence from Denny Gasper to AK personnel. Ref: closure of NCR-44458 (120108-1)	Denny Gasper, Validation S.S.	4/5/2009
C814A	102208-1	Correspondence from Denny Gasper to AK personnel. Ref: closure of NCR-44457 (102208-1)	Denny Gasper, Validation S.S.	4/5/2009
C815A	110808-1	Correspondence from Denny Gasper to AK personnel. Ref: closure of NCR-44456 (110808-1)	Denny Gasper, Validation S.S.	4/5/2009
C816A	102208-1(B)	Correspondence from Denny Gasper to AK personnel. Ref: closure of NCR-44466 (102208-1(B))	Denny Gasper, Validation S.S.	4/5/2009
C817A	N/A	Correspondence from Kevin Leavitt to AK personnel. HWN assignment BN-633	Kevin Leavitt, AMWTP Waste Services	4/6/2009
C818A	110608-1	Correspondence from Kevin Lundquist to AK personnel. Ref: closure of NCRs-44401, 44402, 44403. (110608-1)	Kevin Lundquist, Validation S.S.	4/7/2009
C820A	N/A	Interview of Dave Preston concerning variation of NT-212 inner packaging.	M. L. Johnson	4/20/2009
C821A	N/A	IDCs	Kevin leavitt and Darren Aitken, AMWTP Waste Services	4/16/2009
C822S	N/A	Pits 11 & 12		3/4/2009
C823A		Correspondence from AMWTP RTR personnel to AK personnel. Ref: closure of NCRs.	AMWTP RTR validation	5/19/2009
C824A	N/A	Telephone conversation with Yale Harker, PhD regarding AeroJet Nuclear drum marked CM.	Carolyn Abbott	3/2/2009

Implementing Document: MP-TRUW-8.13

TRACKING NUMBER	DOCUMENT NUMBER	DOCUMENT TITLE/DESCRIPTION	DOCUMENT AUTHOR	DOCUMENT DATE
C825S	N/A	Cargo Container FGE	James Seamans	6/9/2009
C826A		Drums retrieved in 1978 from Trench 5 marked "Cluster Fragmentation Bomb."	Franci Andrus	6/11/2009
C827A		Drums retrieved in 1978 from Trench 5 marked "Cluster Fragmentation Bomb"	Franci Andrus	6/11/2009
C828A		Drums retrieved in 1978 from Trench 5 marked "Cluster Fragmentation Bomb"	Franci Andrus	6/11/2009
C829A		Drums retrieved in 1978 from Trench 5 marked "Cluster Fragmentation Bomb"	Franci Andrus	6/11/2009
C830A		Drums retrieved in 1978 from Trench 5 marked "Cluster Fragmentation Bomb"	Franci Andrus	6/11/2009
C832A		Drums retrieved in 1978 from Trench 5 marked "Cluster Fragmentation Bomb"	Franci Andrus	6/11/2009
C834A	N/A	E-mail to Micky Johnson:Pre filter split	Dave Preston	6/3/2009
C836A	CKA-002-09	Acceptable Knowledge Pertinent to M-III Bins Over-packed with Waste Retrieved During the Early Waste Retrieval Project (CKA-002-09)	Carolyn Abbott, PhD	6/17/2009
C840S	JHK-001-09	Acceptable Knowledge Accuracy Assessment for July 1, 2008 to June 30, 2009 (JHK-001-09)	Jason Kettel	7/29/2009
C841S	JHK-004-08	Revised AK Accuracy Assessment for 7/1/07 to 6/30/08 (JHK-004-08)	Jason Kettel	11/3/2008
C842S	N/A	Pits 11 & 12	Kirk Green	10/20/2009
C843A	CKA-002-07	Containers Retrieved From The Transuranic Storage Area-Retrieval Enclosure Without Previous Historical Data in the Waste Tracking System. (CKA-002-07)	Carolyn Abbott, PhD	11/1/2007
C848S	KBW-01-98	Storage of Drums Containing U-233 at RWMC (KBW-01-98)	K.B. Woods	03/10/1998
C849A	N/A	1/26/10 CBFO conversation relating to segregation practices for MFC/INTEC-RWMC new gen waste	Tim Venneman	01/26/2010
C850A	MLJ-004-10	Memo to File, Revised Estimated Number of Containers for the BN510.1 Supercompacted Debris Waste Stream (MLJ-004-10)	M. L. Johnson	09/01/2010

Implementing Document: MP-TRUW-8.13

TRACKING NUMBER	DOCUMENT NUMBER	DOCUMENT TITLE/DESCRIPTION	DOCUMENT AUTHOR	DOCUMENT DATE
C851A	MLJ-002-2010	Memo to File, Waste Material Parameter per Unit of Waste Cacluations for the BN510.1 Supercompacted Debris Waste Stream (MLJ-002-2010)	M. L. Johnson	03/10/2010
C852A	N/A	Email to Roy Grant in response to Email from Carolyn Abbott (abbock@amwtp.inl.gov) regarding HRA and WCA waste generation processes.	Scott D Lee, MFC	3/12/2010
C853S	CBFO:NTP:NC:GS:10-0748:UFC 2300.00	Memorandum to Richard Provencher, DOE-ID Assistant Manager, Recertification of INL AMWTP Audit A-09-19 (CBFO:NTP:NC:GS:10-0748:UFC 2300.00)	David C. Moody, CBFO	02/28/2010
C855A	CKA-001-10	Letter to File Re: Pad 1, Cells 1 and 2 Waste (CKA-001-10)	Carolyn K. Abbott, PhD	03/17/2010
C856A	MLJ-003-10	Memorandum to Gina Tedford, Waste Stream Volumes and Waste Material Parameter Densities for 2010 Annual Transuranic Waste Inventory Report Update (MLJ-003-10)	M. L. Johnson	3/31/2010
C858S	N/A	Email correspondence to Carolyn Abbott, AMWTP, regarding brine solution identified in the IWTS Material profile 3978P	Roy P. Grant, MFC,	5/6/2010
C859A	TLC-33-89	Letter to Mr. L. D. Witbeck, ANL-W RE: TRU Profile Statement Approval (TLC -33-89)	T. L. Clements, Jr., RWMC/SWEPP Technical Programs	3/21/1989
C860S	N/A	Application of P-listed EPA hazardous waste numbers to ARP wastes	David P. Hutchinson	9/15/2008
C861A	N/A	Email correspondence between Bruce R Adams, MFC and Carolyn Abbott, AMWTP Re: Waste shipped by CCP to MFC/ANL-W.	Bruce R. Adams	05/12/2010
C862A	N/A	Memorandum to W. E. Keheley, OAK re: Plan to Continue the Plutonium Inventory Reduction Effort at the Lawrence Livermore National Laboratory (LLNL)	Charles J. Beers, Jr., Rear Admiral, U.S. Navy	4/10/1994
C864S	N/A	Email correspondence between Roy P. Grant and Carolyn Abbott and Gina Tedford re: Interface agreement between ANL-W and RWMC	Roy P. Grant, MFC	5/4/2010
C865A	N/A	Email correspondence from Roy P Grant to Carolyn Abbott re: Three containers listed on IWTS material profile ANL505T	Roy P. Grant, MFC	11/10/2008
C866S	N/A	Correspondence to Dr. Moody concerning results of EPA's baseline inspection of TRU waste characterization program implemented by AMWTP	Juan Reyes, EPA Director Radiation Protection Division,Washinton D.C.	10/3/2006

Implementing Document: MP-TRUW-8.13

TRACKING NUMBER	DOCUMENT NUMBER	DOCUMENT TITLE/DESCRIPTION	DOCUMENT AUTHOR	DOCUMENT DATE
C867S	N/A	Email RE: request to evaluate scalling factors used by Hanford	James V. Seamans	6/3/2010
C869S	N/A	Correspondence from the EPA to Donald C. Cadbury, Manager, National TRU Program CBFO.	Tom Peake, Director Center for Waste Management and Regulations	06/10/2010
C870S	CBFO:NTP:DCG:MAG:10-0883:UFC 5900.00	Correspondence from David C. Moody to James R. Cooper, Acting Deputy Manager, Idaho Cleanup Project and includes Attachments 1-4. (CBFO:NTP:DCG:MAG:10-0883:UFC 5900.00)	David C. Moody	6/11/2010
C871A	n/a	Hanford Building 325 Interview with Wayne Larson (n/a)	B. Crawford	9/11/2003
C872A	n/a	Hanford Building 325 Radiochemistry Laboratory Interviews with Various Waste Management Personnel (n/a)	B. Crawford and D. Guerin	10/16/2003
C873A	n/a	Waste Material Parameter Analysis for Containers Generated from the Building 325 Radiochemistry Lab and HLW Annexes (n/a)	D. Guerin	12/18/2003
C874A	n/a	Isotopic Analysis for Containers Generated from the Building 325 Radiochemistry Lab and HLW Annexes Assays (n/a)	D. Guerin	10/27/2003
C875S	RCM-001-10	Earliest pack date for Rocky Flats waste retrieved from Pits 11 and 12 (RCM-001-10)	Randall C. Morris, Ph.D.	07/05/2010
C876A	NDK-001-10	Estimation of Number of Drums for BN004 Waste Stream (NDK-001-10)	Nancy D. Kirk	7/5/2010
C877A	CKA-002-10	Volume Estimate for BNINW216 First/Second Stage Sludge Waste Stream (CKA-002-10)	Carolyn K. Abbott, PhD	7/5/2010
C878A	97-EAP-589	Transmittal of Hanford Facility Resource Conservation and Recovery Act (RCRA) Permit Part A (97-EAP-589)	J. E. Rasmussen	7/18/1997
C879A	N/A	Record of Communication Interview with Gary Lanham and Stan Bos	M. Conilogue	8/10/2006
C880A	N/A	Record of Communication for Heat Sealed Bags	M. Conilogue	10/25/2006
C881S	FH-0602938	Request for Approval of Waste Incidental to Reprocessing Determination for Hanford Site Transuranic Waste Stream RLM325D (FH-0602938)	R. G. Gallagher	11/28/2006
C882S	0700042	Contract No. DE-A06-96RL13200 - Approval of Waste Incidental to Reprocessing Determination for Hanford Site Transuranic Waste Stream RLM325D (0700042)	K. A. Klein	12/29/2006

Implementing Document: MP-TRUW-8.13

TRACKING NUMBER	DOCUMENT NUMBER	DOCUMENT TITLE/DESCRIPTION	DOCUMENT AUTHOR	DOCUMENT DATE
C883A	N/A	231-Z Record of Communication - M. W. McCoy and V. C. Asmund Re: PCBs and Storage Boxes	R. Swan, M.E. Lakes, J.D. Anderson	12/18/2006
C884A	N/A	Interview of Michael Wesselman by Richard Clinton concerning Sr-90/Cs-137 Ratio Determination Wesselmen	R. Clinton	3/28/2002
C885A	N/A	Email from Scott Bisping to Magdalena I. Rollosson re: Heat-Sealed Bag Question and Clarification	S. W. Bisping	07/25/2007
C886A	N/A	Email From McCoy, M. W. To Waddoups, J. M. RE: 231-Z Facility	M. W. McCoy	2/16/2007
C887A	N/A	Email from Dan Moder To: M. I. Rollosson RE: Estimated # SWBs for 231-Z Waste	D. L. Moder	7/23/2007
C888A	N/A	Email Response from Elizabeth Curfman to Richard Clinton regarding Inquiry from Caroline Sutter concerning PFP Laboratory History	R. Clinton	1/12/2000
C889A	N/A	Record of Communication for Interview of Ted Venetz Regarding Plutonium Finishing Plant Wastes	P. H. Wicks, M. E. Lakes, R. J. Swan	4/26/2007
C890A	65452-82-159	Memo To: E. T. Abramowski From: S. G. Metcalf Re: Determination of PCB Concentration in Hydraulic Oils (65452-82-159)	S. G. Metcalf	8/25/1982
C891A	N/A	Record of Communication Interviewer: M. Lakes, P. Wicks Interviewee: J. Mejia Subject: PFP Soil (2736-ZB) Building.	M. E. Lakes and P. Wicks	12/19/2006
C892A	N/A	Record of Communication Interviewer: M. Lakes, P. Wicks Interviewee: J. Aranda Subject: PFP Soil (2736-ZB) Building	M. E. Lakes and P. H. Wicks	12/6/2006
C893A	N/A	Record of Communication Interviewer: M. Watson Interviewee: J. Aranda Subject: E-mail response from Jose Aranda about PFP waste	M. Watson	9/13/1999
C894A	N/A	Record of Communication Interviewer: M. Watson Interviewee: D. Fazzari Subject: E-mail Response from Dennis Fazzari on PFP Waste Question	M. Watson	9/13/1999
C895A	ARH-2440	Final Low-Pressure Reactor Fuel Processing Campaign - PUREX Plant Contract AT (45-)-1 20 (ARH-2440)	R. P. Corlew	4/7/1972
C896A	TB-T-XX-00X	Mixed PFP Comprehensive Debris RLMPFPCD (TB-T-XX-00X)	N/A	12/19/2007
C897A	M4T00-DCD-03-029	Memo - From: D. C. DeRosa To: R. P. Dunn Subject: NPFPD and MPFPD Waste Streams (M4T00-DCD-03-029)	D. C. DeRosa	2/7/2003

Implementing Document: MP-TRUW-8.13

TRACKING NUMBER	DOCUMENT NUMBER	DOCUMENT TITLE/DESCRIPTION	DOCUMENT AUTHOR	DOCUMENT DATE
C898A	N/A	Record of Communication Interviewer: R. E. Bolls Interviewee: T. Venetz Subject: Process description of past Sand, Slag, and Crucible waste generated at PFP.	R. E. Bolls	6/30/2005
C899A	3T000-PJC-01-043	Memorandum - From: R. Clinton To: P. J. Crane Subjects: Transmittal of AK Re-eval checklist for Waste Stream NPFPD (3T000-PJC-01-043)	R. Clinton	3/21/2001
C900A	N/A	Record of Communication: Interviewer: R. Clinton Interviewee: G. Krehel Subject: Stanley Works Torpedo Levels	R. Clinton	8/15/2001
C901A	N/A	Record of Communication Interviewer: R. Clinton Interviewee: Customer Service Representative Subject: Telephone Conversation with Consumer Representative of Shell Chemical Company	R. Clinton	8/15/2001
C902A	N/A	Record of Communication Interviewer: R. Clinton Interivewee: G. Krehel Subject: Email: "Inquiry" - Chemical Make-up of Fluid in Stanely Works Torpedo Levels	R. Clinton	7/18/2001
C903A	3T000-PJC-01-158	Memorandum From: R. Clinton To: P. J. Crane Subject: Disclosure of Information Concerning the Waste Designation of a Level Recorded in TRU-WRP-01NCR -100 for Drum RHZ-220-A21300 (3T000-PJC-01-158)	R. Clinton	10/9/2001
C904A	N/A	Record of Communication Interviewer: R. J. Swan Interviewee: D. A. Marsh Subject: Drums with soil from 216-Z-12 Crib	R. J. Swan	7/11/2005
C905A	N/A	Record of Communication Interviewer: R. Clinton Interviewee: L. Djang Subject: Emails: U-234 and Sr-90 Evaluation	L. Djang	4/4/2002
C906A	3T000-PJC-00-172	Memorandum From: P. J. Crane To: L. F. Perkins Subject: TRU Site Project Office Transmittal for Notification of Possible Target Analyte Additions (3T000 -PJC-00-172)	P. Crane	9/8/2000
C907A	n/a	Email From: K. Husted To: M.I. Rollosson Subject: RE: 231-Z Isotopic Data (n/a)	K. Husted, Fluor Hanford	7/16/2007
C908A	3T000-PJC-00-203	Memorandum From: P. J. Crane To: L. F. Perikins Subject: TRU Site Project Office Transmittal for Notification of Target Analyte Additions (3T000-PJC-00-203)	P. Crane	10/26/2000

Implementing Document: MP-TRUW-8.13

TRACKING NUMBER	DOCUMENT NUMBER	DOCUMENT TITLE/DESCRIPTION	DOCUMENT AUTHOR	DOCUMENT DATE
C909A	N/A	Record of Communication Interviewer: R. Clinton Interviewee: T. Cooper Subject: Process Chemistry	R. Clinton	8/28/1998
C910A	02-MNA-006	Memorandum From: N.M. Abdurrahman To: P.J. Crane Subject: Calculations of Hanford Sr-90 Isotopic Ratio Based on its Isotopic Ratio to Cs-137 (02-MNA-006)	N.M. Abdurrahman	8/14/2002
C911A	N/A	Record of Communication Interviewer: M. I. Rollosson Interviewee: K. Husted Subject: Detection of U-232 in trace amounts during NDA MPUREXD and MPFPD containers	M. I. Rollosson	10/12/2007
C912A	N/A	Letter To: G. A. Glover From: L. R. Strickling, R. J. Swan Subject: Review of Fiberglass Reinforced Plastic Plywood Box from the 231-Z Facility	L. R. Strickling and R. J. Swan	1/5/2007
C913A	n/a	Letter To: C. Girres From: J. Bolles - Waste Services Subject: PFP Debris Waste Designation (n/a)	J. Bolles	3/31/2004
C914A	N/A	Record of Communication Interviewer: R. J. Swan, M. S. Watson, and J. D. Anderson Interviewees: M. W. McCoy, L. K. Fetrow and V. C. Asmund	R. J. Swan, M. S. Watson, and J. D. Anderson	1/25/2005
C915A	231Z-DESDSI-02-01	Letter To: File From: M. Watson Subject: DSI for 231-Z TRU Debris waste Stream Designation FRPs (231Z-DESDSI-02-01)	M. Watson	5/17/2006
C916A	N/A	Email From: M. McCoy To: M. S. Watson Subject: Re: Questions about 213-Z Containers	M. McCoy	4/20/2004
C917A	231Z-DESDSI-03-00	231-Z TRU Debris waste Stream Designation for Cement Box Container (231Z-DESDSI-03-00)	J. Waddoups	3/14/2006
C918A	N/A	Waste Material Parameter Analysis for Waste Stream RLM325D, 325 Building Radiochemical Processing Laboratory Transuranic Debris	S. Schafer	09/24/2008
C919A	N/A	WWIS Report Radionuclides for Waste Stream RLM325D	S. Schafer	09/25/2008
C920A	FH-0003830	Letter To: G.H. Sanders From: E.S. Aromi, P.J. Crane, E.M. Greager Subject: Debris Classification for Sand, Slag, and Crucible Waste (FH-0003830)	E.S. Aromi, P.J. Crane, E.M. Greager	7/27/2000
C921A	3T000-PJC-00-045	Interoffice Correspondence To: A.G. Miskho From: R. Clinton Subject: Proposed Waste Designation of Carbon Tetrachloride Used at the Plutonium Finishing Plant (3T000-PJC-00-045)	R. Clinton	04/10/2000

Implementing Document: MP-TRUW-8.13

TRACKING NUMBER	DOCUMENT NUMBER	DOCUMENT TITLE/DESCRIPTION	DOCUMENT AUTHOR	DOCUMENT DATE
C922A	M4T00-PJC-02-077	Memorandum To: P.J. Crane From: R. Clinton Subject: U-234 to U-235 and U-238 Ratios for Appendix E of Hanford Site Transuranic Waste Certification Plan for NDA (M4T00-PJC-02-077)	R. Clinton	4/11/2002
C923A	M4T00-PJC-02-076	Memorandum To: P.J. Crane From: R. Clinton Subject: Sr-90 to Cs-137 Ratio For Appendix E of Hanford Site Transuranic Waste Certification Plan for NDA (M4T00-PJC-02-076)	R. Clinton	4/11/2002
C924A	n/a	Clarification on PFP Lead Lined Gloves (n/a)	C. Simiele	6/15/2000
C925A	7G330-MEJ-03-001	Interoffice Memo From: Closure Projects Engineering Support To: J.G. Kristofzki Subject: Summary of Bismuth Phosphate Process and Plutonium=Uranium Extraction Process Chemical Flowsheets (7G330-MEJ-03-001)	Closure Projects Engineering Support	12/11/2003
C926A	n/a	To: L.E. Stickling From: R.J. Swan. Subject: WRP Strategy For Managing Polychlorinated Biphenyl's Under the Toxic Substances Control Act (n/a)	R.J. Swan	01/30/2008
C927A	F9000-07-019	Memorandum: To: L.R. Stickling From: J.E. Hyatt Subject: Proposal to Delay Assignment of TSCA Status to Retrievably Stored Low-Level Waste (F9000-07-019)	J.E. Hyatt	06/25/2007
C928A	n/a	Email From: E.M. Greager To: sherinance@aol.com Subject: FW:PFP Building Numbers (n/a)	E.M. Greager	05/20/2009
C929A	n/a	Memorandum - TO: CCP Records From: S. Nance, CCP AKE RE: Waste Material Parameter Analysis for Waste Stream MPFPDD (n/a)	S. Nance	03/16/2010
C930S	N/A	Email to Micky Johnson re: Request for data	Jim Vernon, WIPP	5/24/2010
C931A	n/a	Containers Received from Waste Stream RLM231Z.001 (n/a)	n/a	N/A
C932A	M4T00-TRU-070-148, M4T00-TRU-148.1	Data Quality Objective Reconciliation, HSG Analysis Report, and AK Confirmation for 17 containers from Waste Stream 231ZD. (M4T00-TRU-070-148, M4T00-TRU-148.1)	R.P. Dunn	08/30/2007
C933S	n/a	Record of Communication - Subject: Electroplating in 231-Z (n/a)	M. Doherty	04/08/2010
C934A	n/a	Record of Communication - Interviewers: S. Schafer, S. Nance Interviewees: R.J. Swan, M.E. Lakes Subject: Feed to the Building 232-Z Incinerator (n/a)	S. Schafer, S. Nance	05/04/2010
C935S	n/a	Email - From: E. Grohs To: R. Swan Subject: RE 231Z (n/a)	E. Grohs	05/12/2010

Implementing Document: MP-TRUW-8.13

TRACKING NUMBER	DOCUMENT NUMBER	DOCUMENT TITLE/DESCRIPTION	DOCUMENT AUTHOR	DOCUMENT DATE
C936A	325-DES-01-00	325 Facility Debris Waste Stream Designation (325-DES-01-00)	R.J. Swan	07/27/2004
C937A	M4T00-TRU-06-639.1	Memorandum To: R.P. Dunn From: M.H. Conilogue Subj: Data Quality Objectives Reconciliation, Headspace Gas Analysis Report, Flammable VOC Report, and Acceptable Knowledge Confirmation Checklist for 24 Containers from Waste Stream R (M4T00-TRU-06-639.1)	M.H. Conilogue	07/09/2007
C938A	SE-PC-19	Memorandum Report: Purity of Product solutions from T-5-02 and T-5-03 Runs in the Isolation Building (231) (SE-PC-19)	P.W. Crane	04/23/1945
C939A	PFP-DES-02-00	Don't Say it - Write It! TO: File FROM: M. Lakes Subject: PFP PCB Debris Designation (PFP-DES-02-00) (PFP-DES-02-00)	M. Lakes	10/11/2006
C940A	n/a	Email - From: E.L. Grohs, To: S. Nance, J. Johannesen Subject: RE: Chemical Management System (n/a)	E. Grohs	07/17/2010
C941A	JHK-001-10	Memorandum to Eric Schweinsberg and Tom Fallon, Co-located Core Sample Control Charts (JHK-001-10)	Jason Kettel	7/6/2010
C942A	JHK-002-10	Memorandum to Eric Schweinsberg: Co-Located Solid Sampling F-Test Results (JHK-002-10)	Jason Kettel	7/6/2010
C944A	N/A	AMWTP Hazardous waste determination (HWD) for Organic Liquid from Maintenance Activities (BN-534)	AMWTP Waste Services	
C945A	SMS-018-2004	Determination of Beryllium Content of RFETS TRU Waste (SMS-018-2004)	Scott M. Smith	12/01/2004
C946S	ECT-001-10	Waste Container Inventories Not Included in Advanced Mixed Waste Treatment Project Transuranic Baseline Reports - ECT-001-10 (ECT-001-10)	Elizabeth C. Thiel	12/16/2010
C948S	KN-111-01	Response to Request for Additional Information on Environmental Protection Agency (EPA) Hazardous Waste "P" and "U" Codes relative to B374 Operations (KN-111-01)	Joseph A. Legare (DOE, RF)) and Karan North (Kaiser-Hill Company, LLC, RFETS)	08/29/2001
C949A	CBFO:ORC:CAZ:KJB 01-0793 UFC 5486	Legacy Solidified TRU/PCB Waste (CBFO:ORC:CAZ:KJB 01-0793 UFC 5486)	Cynthia Zvonar, Assistant Manager, office of Regulatory Compliance	06/21/2001
C950A	N/A	Letter from John H. Smith, Chemist, to Ms. Lynne Smith, WIPP Office Director. Response to the email message of August 16, 2001 from Ms. Cynthia Zvonar of the Carlsbad Field Office which describes certain DOE TRU wastes which contain non-liquid PCBs.	John H. Smith, Ph-D, Chemist, EPA	02/28/2002

Implementing Document: MP-TRUW-8.13

TRACKING NUMBER	DOCUMENT NUMBER	DOCUMENT TITLE/DESCRIPTION	DOCUMENT AUTHOR	DOCUMENT DATE
C951S	N/A	C. Maupin's notebook page outlining AMWTP communications with EPA Region X on use and approval of Micro Cell-E absorbent for PCB waste.	Christian Maupin, AMWTP subcontractor for RCRA permitting	01/04/2010
C952S	n/a	E-mail Correspondence from Murthy Devarakonda to Michael Rivera. Subject: IDC 003 Packaging (n/a)	Murthy Devarakonda	08/03/2005
C953A	HWD 061604-01	Letter to File RE: Absorbed Supercompactor Squeezants (IDCs BN-507 and BN-514). HWD 061604-01 (HWD 061604-01)	AMWTP	01/31/2011
C954S	CBFO:NTP:NC:GS:11-0167:UFC 2300.00	Memorandum to Mark Searle, Acting Deputy Manager Idaho Cleanup Project, Recertification INL AMWTP Audit A-10-24 (CBFO:NTP:NC:GS:11-0167:UFC 2300.00)	Edward Ziemianski, Acting Manger, CFO	03/03/2011
C955A	HWD 021411-01	HWD 021411-01: TRU Shredder Boxes from the Advanced Mixed Waste Treatment Facility (IDC BN-539) (HWD 021411-01)	Darren Aitken	02/14/2011
C956A	WMP-400	Record of Communication for Packaging Cans Used in Hot Cell Facilities (WMP-400)	M.H. Conilogue	10/25/2006
C957A	231-Z	231-Z Carbon Tetrachloride Waste Code Change from D019 to F001 (231-Z)	J.M.Waddoups	02/14/2007
C958A	N/A	Solidfied 231-Z Waste	R.J. Swan	12/18/2006
C959A	N/A	Interview with Jose Aranda	R. Clinton	08/28/1998
C960A	N/A	Interview with R. Gregory	R. Clinton	08/28/1998
C961A	N/A	Questionnaire	G. Backlund	06/04/1999
C962A	N/A	E-mail re: 224-T Wastes	J. Anderson	07/07/2007
C963A	N/A	Email from Aranda to Clinton re: Question About Heat Sealing	R. Clinton	12/02/1999
C964A	16300-AC90-041	Fax from Manthos to Hamilton re: Values used for WIPP Waste Calculations at PFP (16300-AC90-041)	E.J. Manthos	10/08/1990
C965A	N/A	Email from Fred Riedel	Fluor Federal Services	02/09/2000
C966A	N/A	Letter from P.J. Crane	R. Clinton	10/01/1998
C967A	N/A	Interview of J. Estey	M. Watson	10/03/2000
C968A	N/A	Interview of J.A. Mortenson re: Heat Sealed Packages	M. Watson	09/19/2000
C969A	N/A	Interview of R.D. William re: PFP Heat Sealed Packages	M. Watson	09/14/2000

TRACKING NUMBER	DOCUMENT NUMBER	DOCUMENT TITLE/DESCRIPTION	DOCUMENT AUTHOR	DOCUMENT DATE
C970A	N/A	Interview of R.E. Allenby re: PFP Heat Sealed Packages	M. Watson	09/14/2000
C971A	N/A	Interview of R. Lehrschall re: Heat Sealed Packages	M. Watson	09/27/2000
C972A	M4T00-PJC-02-076	Sr-90 To Cs-137 Ratio for Appendix E of Hanford Site Transuranlc Waste Certification Plan for NDA (M4T00-PJC-02-076)	R. Clinton	04/11/2002
C973A	3T000-PJC-01-156	Disclosure of Miscertification Information and Visual Examination Selection for Fiscal Year 2002 (3T000-PJC-01-156)	R. Clinton	10/09/2001
C974A	03-PTD-0010	Letter - Subject: Contract No. DE-AC06-96RL 13200 - DOE Approval for Termination of Safeguards on Specific Attractiveness D Mixed Oxide Scrap at the Plutonium Finishing Plant (03-PTD-0010)	M.H. Schlender	11/15/2002
C975A	03-PTD-0056	Letter- Subject: Contract No. DE-AC06-96RL 13200 - DOE Approval for Termination of Safeguards on Specific Attractiveness D Mixed Oxide Scrap at the Plutonium Finishing Plant (03-PTD-0056)	K.A. Klein	03/20/2003
C976A	N/A	Email From: M.M. Anderson To: M.I. Rollosson Subject: FW: Coffins from PFP – meeting notes	M.M. Anderson	08/02/2006
C977A	N/A	Email in Response to Questionnaire sent by M.S. Watson to Several Former Workers at PFP Regarding the Use of Sealer Bags Generating Heat Sealed Packages	R. R. Trainor	09/06/2000
C978A	65452-82-114	Internal Memo To: E. T. Abramowskl From: S.G. Metcalf Subject: PCB Determination Results in Contaminated Hydraulic Oils (65452-82-114)	S. G. Metcalf	05/19/1982
C979S	N/A	Email From: J. Anderson To: R.J. Swan Subject: RE: 231-Z Concrete Box Again	J. Anderson	03/14/2005
C980A	N/A	231-Z Record of Communication - Steve McGaughey	M. Watson	04/19/2006
C981A	M4T00-DCD-03-028	Memorandum - Subject: Acceptable Knowledge Documentation for the Determination of Beryllium Concentration in Waste Streams NPFPD and MPFPD (M4T00-DCD-03-028)	S. W. Bisping	02/06/2003
C982A	M2C00-02-026	Memo to C.S. Sutter re: PFP Residues Stabilization Activity Based Startup Plan for Group 2 Alloys (M2C00-02-026)	A. K. McDowell	02/25/2003
C983A	N/A	Designation of TRU Drums Containing Heat Sealed Inner Packages	L.J. Estey	05/07/1990
C984A	3T000-PJC-01-090	Transmittal of Acceptable Knowledge Confirmation Checklist for 19 Waste Containers from Waste Stream MPFPD (3T000-PJC-01-090)	R. Clinton	06/07/2001

Implementing Document: MP-TRUW-8.13

TRACKING NUMBER	DOCUMENT NUMBER	DOCUMENT TITLE/DESCRIPTION	DOCUMENT AUTHOR	DOCUMENT DATE
C985S	BWH-FF-IA-FP-200001834	FY2000 Fire Protection Assessment - Buildings 231-Z (BWH-FF-IA-FP-200001834)	J. R. Bell	06/20/2000
C986A	15F00-96-068	Internal Memo From: Plutonium Process Support Laboratories To: L. Dayley Subject: Results of Sand, Slag, and Crucible Testing for Cementation Process (15F00-96-068)	S. A. Jones, J. L. Winstead	08/07/1996
C987A	N/A	Record of Communication with D. Guerin re: Isotopic Analysis for RLM325D	M. H. Conilogue	09/27/2006
C988S	33220-99-GCT-067	Internal Memo - Subject: Disclosure of Reference Sources Used in Compiling Acceptable Knowledge Documentation (33220-99-GCT-067)	R. Clinton	08/12/1999
C989A	N/A	Communication to R. Clinton re: Occurrence of Cs-137 and K-40 in Transuranic Waste	M. Cantaloub	02/20/2001
C990A	80132-89-069	Internal memo to R.L. Granberg re: Solvent Waste Designations (80132-89-069)	R. J. Landon	05/15/1989
C991A	HW-29200	Plutonium Purification and Fabrication Technical Manual (HW-29200)	T. Miskho	04/01/1954
C992A	N/A	Slurping Vacuum System and Analytical Laboratory Room 146 Repackaging Process	N. Seguin	09/22/1999
C993A	15540-094-EJM-029	Disposal Request for Downloaded CCL4 - TBP Waste - PFP-94-000189 (15540-094-EJM-029)	E.J. Manthos	02/23/1994
C994A	8F000-SLF-00-23	Memorandum To: P. J. Crane Subject: Analysis of TICs with Respect to Possible Addition to Target Analyte List (8F000-SLF-00-23)	S.L. Fitzgerald	09/13/2000
C995A	231Z-DESDSI-01-01	231-Z TRU Debris Waste Stream Designation Revision 1 for Drums (231Z-DESDSI-01-01)	M. S. Watson	05/17/2006
C996A	15F0096-062	Internal Memo To: E. G. Backlund Subject: Corrosivity Test on Cemented Sand, Slag, and Crucible Items (15F0096-062)	M. L. Winstead	07/10/1996
C997A	N/A	Addendum to TSD Record	Joelle Stamm	12/13/2004
C998A	01-RCA-345	Submittal of Corrective Measures Report for Notice of Correction, Dated March 1, 2001, From the State of Washington Department of Ecology (01-RCA-345)	J. Hebdon	07/02/2001
C999A	N/A	Email from Ted Venetz re: Fab Oil Clarification	T. Venetz	04/10/2009

Implementing Document: MP-TRUW-8.13

TRACKING NUMBER	DOCUMENT NUMBER	DOCUMENT TITLE/DESCRIPTION	DOCUMENT AUTHOR	DOCUMENT DATE
D001A	SH-05-2002	Assignment of Hazardous Waste Numbers D006 and D008 to RF IDC-802 (SH-05-2002)	Sheila Hailey	11/18/2002
D002A	SH-02-2002	Assignment of Hazardous Waste Number F003 to RF IDC-421 (SH-02-2002)	Sheila Hailey	11/18/2008
D003A	SH-03-2002	Removal of Hazardous Waste Numbers from RF IDC-409 and RF IDC-414 (SH-03-2002)	Sheila Hailey	11/18/2002
D004A	SH-04-2002	Assignment of Hazardous Waste Number D022 to RF IDC-978 (SH-04-2002)	Sheila Hailey	11/18/2002
D005A	SH-01-2002	Removal of Hazardous Waste Number D001 from RF IDC-33A, RF IDC-33B and RF IDC-339 (SH-01-2002)	Sheila Hailey	11/18/2002
D006A	SH-06-2002	Removal of Hazardous Waste Number D002 from RF IDC-001, RF IDC-002, RF IDC-800, RF IDC-007, RF IDC-803, and RF IDC-807a (SH-06-2002)	Sheila Hailey	12/11/2002
D007A	SH-09-2002	Correct RF IDC Assignment for Building 374 Wet Sludge-Cemented (SH-09-2002)	Sheila Hailey	12/11/2002
D008A	SH-08-2002	Addition of Hazardous Waste Numbers to RF IDC-339 (SH-08-2002)	Sheila Hailey	12/11/2002
D009A	SH-07-2002	Addition of Hazardous Waste Numbers F006, F007, and F009 to RF IDC-371 and RF IDC-377 (SH-07-2002)	Sheila Hailey	12/11/2002
D010A	SH-19-2002	Application of D002 to RF IDC-292 Containers Containing Excess Free Liquids (SH-19-2002)	Sheila Hailey	12/18/2002
D011A	SH-11-2002	Assignment of HWN D011 to RF IDC-004 (SH-11-2002)	Sheila Hailey	12/18/2002
D012A	SH-12-2002	Assignment of HWN D029 to RF IDC-420 and RF IDC-421 (SH-12-2002)	Sheila Hailey	12/18/2002
D013A	SH-13-2002	Application of D001 to RF IDC-480 Containers Containing Excess Free Liquids or Compressed Gases (SH-13-2002)	Sheila Hailey	12/18/2002
D014A	SH-14-2002	Application of D002 to RF IDC-440 Containers Containing Excess Free Liquids (SH-14-2002)	Sheila Hailey	12/18/2002
D015A	SH-15-2002	Application of D002 to RF IDC-441 Containers Containing Excess Free Liquids (SH-15-2002)	Sheila Hailey	12/18/2002
D016A	SH-16-2002	Application of D002 to RF IDC-336 Containers Containing Excess Free Liquids (SH-16-2002)	Sheila Hailey	12/18/2002
D017A	SH-17-2002	Removal of Hazardous Waste Number (HWN) D002 from RF IDC-33A and HWNs D001 and D002 from RF IDC-44A (SH-17-2002)	Sheila Hailey	12/18/2002

Implementing Document: MP-TRUW-8.13

TRACKING NUMBER	DOCUMENT NUMBER	DOCUMENT TITLE/DESCRIPTION	DOCUMENT AUTHOR	DOCUMENT DATE
D018A	SH-18-2002	Removal of Hazardous Waste Number D001 from RF IDC-48A (SH-18-2002)	Sheila Hailey	12/18/2002
D019A	SH-10-2002	Removal of Hazardous Waste Numbers from RF-432(Nonhazardous) (SH-10 -2002)	Sheila Hailey	12/18/2002
D020A	SH-20-2002	Assignment of HWNs to BC IDC-201, BC IDC-202, BC IDC-203, and BC IDC -204 (SH-20-2002)	Sheila Hailey	12/23/2002
D021A	SH-001-2003	Characterization of RF IDC-311 as a Nonhazardous Waste (SH-001-2003)	Sheila Hailey	1/18/2003
D022A	D022A	Telephone Interview Record of Scott Kitts and George Kirsch, BCL, conducted by Kevin Peters, WASTREN, Inc. "Discussions about JN-4 Waste Stored in JN-3." (D022A)	conducted by Kevin Peters, WASTREN, Inc	7/22/1998
D023A	D023A	Letter to AK Record authored by Scott Smith, WASTREN, Inc. "Discrepancy Report Relating to Building JN-4 Waste Inventory." (D023A)	Scott Smith, WASTREN, Inc.	2/18/2002
D024A	N/A	Correction of Invalid EPA HWN assigned in the Acceptable Knowledge Document for the Battelle Columbus Laboratories Building JN-4 Plutonium Laboratory (BNFL-5232-RPT-TRUW-04)	Sheila Hailey	5/12/2003
D025A	N/A	Characterization of RF IDC 310 as a Nonhazardous Waste	Sheila Hailey	09/16/2003
D026A	N/A	Inclusion of Hazardous Waste Number F003 to RF IDCs 001, 002, and 800	Sheila Hailey	09/16/2003
D027A	N/A	Inclusion of Hazardous Waste Number F004 to RF IDC-374	William J. Erhardt	9/17/2003
D028A	N/A	Document Error for Box Dimensions Reported in P364A	Sheila Hailey	2/12/2004
D029A	BJT-001-2004	Generation Location for Prefix 0089 Wastes (BJT-001-2004)	Betty Tolman	7/22/2004
D030A	BJT-002-2004	Generation Location for Prefix 0090 Wastes (BJT-002-2004)	Betty Tolman	8/17/2004
D031A	SPC-018-2005	Beryllium Greater than 1% by Weight in RF-IDC 800 Waste (SPC-018-2005)	Steve Carpenter	3/14/2005
D032A	N/A	Generation dates for BN004	Vivian Sendelweck	7/31/2005
D033A	CKA-002-2005	Removal of Hazardous Waste Number (HWN) D029 from Rocky Flats (RF) Wastes IDC 420, IDC 421, and IDC 422 (CKA-002-2005)	Carolyn Abbott	07/20/2005
D034A	CKA-005-2005	Discrepancy Report D034A - New Packaging Configuration for Rocky Flats (RF) IDC 001 (First Stage Sludge) (CKA-005-2005)	Carolyn Abbott	8/3/2005
D035A	CKA-007-2005	Discrepancy Report D035A - Assessment of HWN D001 Assigned to Rocky Flats (RF) Filter Waste (IDCs 335, 338, 490) (CKA-007-2005)	Carolyn Abbott	08/09/2005

Implementing Document: MP-TRUW-8.13

TRACKING NUMBER	DOCUMENT NUMBER	DOCUMENT TITLE/DESCRIPTION	DOCUMENT AUTHOR	DOCUMENT DATE
D036A	CKA-008-2005	Assessment of HWNs Assigned to Rocky Flats (RF) Filter Waste (IDCs 328) (CKA-008-2005)	Carolyn Abbott	8/9/2005
D037A	CKA-009-2005	Assessment of F-Listed EPA HWNs Associated with 1,1,2-Trichloro-1,2,2-trifluoroethane in the Rocky Flats (RF) Filter Waste (CKA-009-2005)	Carolyn Abbott	8/15/2005
D039A	CKA-013-2005	Discrepancy Report D039A - Difference in the assignment of HWNs to Mound Acidic/Caustic Waste, IDCs MD 834 and MD 835 between AMWTP-RPT-TRUW-13 and AMWTP-RPT-TRUW-23 (CKA-013-2005)	Carolyn Abbott	9/1/2005
D040A	CKA-014-2005	Discrepancy in dates of waste generation reported for Mound Laboratory wastes in AMWTP-RPT-TRUW-13 (CKA-014-2005)	Carolyn Abbott	9/1/2005
D041A	MLJ-001-2005	Assessment of HWNs Assigned to Rocky Flats Metal Waste (MLJ-001-2005)	Micky L. Johnson	3/10/2005
D042A	MLJ-004-2005	Discrepancy Report D042A -Assessment of Acceptable Knowledge information in AMWTP-RPT-TRUW-05 for Rocky Flats metal waste (MLJ-004 -2005)	M.L. Johnson	9/15/2005
D043A	D043A	Assessment of Hazardous Waste Numbers Assigned to Rocky Flats Description Code (IDCs): RF-292, RF-371 and RF-377 (D043A)	Tim Venneman	01/29/2009
D044A	TV-006-2006	Assessment of buildings that generated resin waste item description codes (IDCs): RF430, RF431, RF432 and RF822 (TV-006-2006)	Tim Venneman	2/1/2006
D045A	TV-003-2006	Assessment of hazardous waste numbers (HWNs) assigned to BN161 Waste Stream Profile [i.e., Item Description Codes (IDCs): RF371 and RF377] (TV-003-2006)	Tim Venneman	01/18/2006
D046A	TV-004-2006	Assessment of Hazardous Waste Numbers Assigned to Rocky Flats Description Codes (IDCs): RF 432 and RF822 wastes (TV-004-2006)	Tim Venneman	01/18/2006
D047A	MLJ-005-2005	Assessment of Hazardous Waste Numbers Assigned to BN304 Waste stream profile, Mound Debris Stream (MLJ-005-2005)	Micky Johnson	11/30/2005
D048A	TV-001-2006	Assessment of buildings that generated firebrick debris waste item description codes (IDCs): ARF371 and RF377 (TV-001-2006)	Tim Venneman	1/18/2006
D049A	MLJ-007-2005	Discrepancy Report D049A - Assessment of Acceptable Knowledge information in AMWTP-RPT-TRUW-05 for Mound metal waste (MLJ-007-2005)	Micky L.Johnson	12/28/2005
D050A	MLJ-003-06	Estimate of Volumes for Cemented Sludge Waste (BN836) (MLJ-003-06)	M. L. Johnson	4/27/2006

Implementing Document: MP-TRUW-8.13

TRACKING NUMBER	DOCUMENT NUMBER	DOCUMENT TITLE/DESCRIPTION	DOCUMENT AUTHOR	DOCUMENT DATE
D051A	CKA-020-2006	Assessment of the presence of 137Cs in Rocky Flats Plant Waste (CKA-020 -2006)	Carolyn Abbott	4/10/2006
D052A	N/A	CCP Acceptable Knowledge Source Document Discrepancy Resolution; Historical Assignment of EPA Hazardous Waste Numbers to Graphite Waste	Kevin Peters, Rick Chavez	5/5/2005
D053A	N/A	CCP Acceptable Knowledge Source Document Discrepancy Resolution; Waste Stream Number ID-RF-S5300-A; Historical Assignment of EPA Hazardous Waste Numbers to Combustibles and Plastic debris.	Jeff Harrison, Barbara Bloomfield	9/21/2005
D054A	N/A	CCP Acceptable Knowledge Source Document Discrepancy Resolution; Waste Stream Numbers ID-RF-S3114 and ID-RF-S3150-A; Historical Assignment of EPA Hazardous Waste Numbers to Organic Setups and Solidified Organics.	Jeff Harrison, Barbara Bloomfield	12/21/2005
D055A	N/A	CCP Acceptable Knowledge Source Document Discrepancy Resolution; Waste Stream Numbers ID-RF-S5100-A; Historical Assignment of EPA Hazardous Waste Numbers to Raschig Rings.	Jeff Harrison, Barbara Bloomfield	8/9/2005
D056A	MLJ-006-06	Assessment Of Hazardous Waste Numbers Assigned to Cemented Sludge (BN836) (MLJ-006-06)	M.L. Johnson	5/10/2006
D058A	TV-011-06	Assessment of the hazardous waste number F003 identified for Rocky Flats IDCs: RF420, RF421, RF422, and RF425 (TV-011-06)	Tim Venneman	6/13/2006
D059A	CKA-002-06	Assessment of the hazardous waste number F003 identified for Rocky Flats IDC 339 (CKA-002-06)	Carolyn Abbott	08/02/2006
D060A	CKA-001-06	Discrepancy in the Acceptable Knowledge Information for Item Description Codes 806 and 823 Wastes Reported in the INEL-96.0280 Report, "Acceptable Knowledge Document for INEEL Stored Transuranic Waste – Rocky Flats Plant Waste," Revision 03, Dated February 28, 2003, Section 17 and Acceptable Knowledge Documents in the Acceptable Knowledge Record (CKA-001-06)	Carolyn Abbott	8/2/2006
D061A	D061A	Prefix use, building numbers and process changes that occurred during the operational history at the Rocky Flats (RF) facility (D061A)	Randall C. Morris	07/14/2009
D062A	D062A	Volume Estimate for Waste Stream BN222, Solidified Plutonium Recovery Incinerator Waste. (D062A)	M. L. Johnson	06/28/2010

Implementing Document: MP-TRUW-8.13

TRACKING NUMBER	DOCUMENT NUMBER	DOCUMENT TITLE/DESCRIPTION	DOCUMENT AUTHOR	DOCUMENT DATE
D063A	D063A	Advanced Mixed Waste Treatment Project (AMWTP), Rocky Flats Environmental Technology Site (RFETS) and Idaho National Laboratory's (INL) Accelerated Retrieval Project (ARP) Subsurface Disposal Area (SDA) hazardous waste determinations (HWDs)/Hazardous waste numbers (HWNs) for roaster oxide. (D063A)	Tim Venneman	08/27/2008
D064A	D061A	Discrepancy report to resolving the assignment of F039 to IDC RF-374. (D061A)	T. Venneman	8/26/2008
D070A	N/A	Advanced Mixed Waste Treatment Project (AMWTP) TRU and AMWTP mixed low-level waste (MLLW) program's hazardous waste determinations (HWDs)	Tim Venneman	06/11/2009
D073A	N/A	Assessment of Hazardous Waste Numbers Assigned to Rocky Flats Description Code (IDCs): RF-292 and 807b.	Tim Venneman	01/29/2009
D074A	N/A	Discrepancy resolution to resolve the F003 HWN assignment on IDCs: RF-292 and RF-807b/696	Tim Venneman	2/12/2009
D075A	D075A	Identification of containers of roaster oxide (roasted depleted uranium)sent from Rocky Flats Plant to Idaho. (D075A)	Carolyn K. Abbott	10/20/2009
D076A	D076A	Discrepancy Report D076A, Resolution of the F003 HWN assignment between AK source documents and WIPP-approved WSPFs (D076A)	Bill Erhardt	09/19/2009
D077A	N/A	Discrepancy in assignment of HWNs D036/F004 to RF waste	Carolyn Abbott	07/14/2010
D078A	D078A	Assignment of EPA code P015 to IDC's RF-001, RF-002, RF-003, RF-007, and RF-372 (D078A)	Gina Tedford	03/16/2010
D079A	n/a	Email From: D. Guerin To: M.H. Conilogue Subject: AK Source Doc. C004 for Bldg. 325 (n/a)	D. Guerin	9/27/2006
D080A	n/a	Acceptable Source Document Deficiency - Interview: Mike Conilogue, Molly Anderson, Gary Lanham, and Sam Bos August 3, 2006 (n/a)	B. Crawford, R.J. Swan, R.E. Bolls, M.H. Conilogue, M.M. Anderson	8/3/2006
D081A	n/a	Acceptable Knowledge Source Document Discrepancy Resolution (n/a)	L. Porter, D.I. Rollosson, M. Rollosson	04/07/2010
D082A	n/a	Acceptable Knowledge Source Document Discrepancy Resolution (n/a)	N. McCants	04/22/2010

Implementing Document: MP-TRUW-8.13

TRACKING NUMBER	DOCUMENT NUMBER	DOCUMENT TITLE/DESCRIPTION	DOCUMENT AUTHOR	DOCUMENT DATE
D083A	N/A	Acceptable Knowledge Source Document Discrepancy Resolution - RLM231ZD.001	N/A	04/13/2010
D084A	n/a	Acceptable Source Document Discrepancy Resolution (MPFPDD) (n/a)	S. Schafer, V. Waldram	05/10/2010
D085A	N/A	Acceptable Knowledge Source Document Discrepancy Resolution - RLM325D.001	S. Nance, V. Waldram	06/14/2010
D086A	N/A	Discrepancy Report D086A -Assignment of HWNs to Rocky Flats Organic Setup Wastes	AMWTP	???????
D087S	N/A	Discrepancy report addressing P and U-listed HWNs associated with INL SDA ARP activities.	AMWTP	08/20/2012
D088A	D088A	Estimate of Volume and Revision of Generation Start Date for Plutonium Recovery Ash Waste Stream (BN421) (D088A)	M. L. Johnson	05/06/2011
D089A	n/a	Discrepancy Resolution. Incorrect EPA Hazardous Waste Number. (n/a)	Scott Smith	03/11/2008
D090A	N/A	Discrepancy Form with Resolution that 231-Z Carbon Tetrachloride Designation Code should be F001 not D019, and related E-mail	M. I. Rollosson	07/11/2007
D091A	N/A	AK Source Document Discrepancy	R. Clinton	05/20/1999
D092A	N/A	NaI Discrepancy	R. Clinton	07/15/1999
D093A	N/A	CCP NCR and CAR Logs for 2003 and 2004	M. M. Anderson	07/19/2009
D094A	D094A	Discrepancy Report relating to ANL-E, INL and AMWTP historical waste identification using content code Vs IDC over time. (D094A)	Tim Venneman	11/15/2012
D095A	N/A	Discrepancy Report for Graphite Waste	AMWTP	10/20/2011
D096A	D096A	Discrepancy Report resolving the HWNs for AMWTP ANL-E legacy wastes. (D096A)	Tim Venneman	01/30/2012
D098A	N/A	Discrepancy Report (D098A) for legacy waste associated with INL generators	AMWTP	09/01/2012
D099S	AE-D-012	Discrepancy Report- HWNs variation between CCP-AK-INL-025, CCP-AK-ANLE-001 and AMWTP ANL-E baseline document RPT-TRUW-89. (AE-D-012)	AMWTP	12/20/2012
D100A	AE-D-001	Discrepancy; Bldg of Origin (212 versus 330) (AE-D-001)	ANL-E, Tom Krause	07/26/2000
D101S	AE-D-002	Discrepancy; Radionuclides (AE-D-002)	ANL-E, Tom Krause	07/06/2000

Implementing Document: MP-TRUW-8.13

TRACKING NUMBER	DOCUMENT NUMBER	DOCUMENT TITLE/DESCRIPTION	DOCUMENT AUTHOR	DOCUMENT DATE
D102S	AE-D-003	Discrepancy; Time Period of Generation (AE-D-003)	ANL-E, Tom Krause	07/26/2000
D103S	AE-D-004	Discrepancy; Hazardous Constituents (AE-D-004)	ANL-E, Tom Krause,	
D104S	AE-D-005	Resolution of NBL chemical usage and chemicals present in AE-CH-H-M waste stream (AE-D-005)	ANL-E, Tom Krause	09/18/2000
D105S	AE-D-007	Discrepancy: Physical Form/Waste Matrix Codes (AE-D-007)	ANL-E, D. Becker	12/04/2002
D106S	AE-D-009	Discrepancy: Physical Form/Waste Matrix Code (AE-D-009)	ANL-E, D. Becker	01/22/2003
D107A	AE-D-011	Discrepancy Report- HWNs variation between CCP source documents: AE-D -011, CCP-AK-INL-025, CCP-AK-ANLE-001 and AMWTP ANL-E baseline document RPT-TRUW-89. (AE-D-011)	AMWTP	12/20/2012
D108S	DR10	Discrepancy Regarding the Volume of 7-Gallon Waste Cans (DR10)	ANL-E/CCP- K. Peters	08/07/2006
D109A	N/A	Discrepancy resolution for EDF-0783 and EDF-0768	AMWTP	02/28/2013
D110S	N/A	Discrepancy resolution (D110A) for the AMWTP BN601 (i.e., BN-601) waste stream (i.e., AMWTP Homogeneous Solids Legacy Wastes) HWN assignment.	AMWTP	XXXX
D111A	N/A	Discrepancy resolution (D111A) addressing differences between AMWTP MLLW and TRU Program characterization and waste processing.	AMWTP	06/17/2013
D113S	N/A	E-mail correspondence from Mike Papp to Steve Carpenter - Re: Waste Stream LA-MHD03.001 2-nitropropane	Central Characterization Project (CCP)	07/09/2013
D114A	D114A	Discrepancies between HWNs and constituents cited in MFC source documents. (D114A)	Randall C. Morris	07/31/2013
D115S	N/A	Discrepancy Resolution: Historical Assignment of the F002 HWN to Carbon Tetrachloride.	AMWTP	12/11/2013
D116A	N/A	Discrepancies between HWNs and constituents cited in multiple documents related to MFC debris waste.	AMWTP	01/09/2014
D117A	D117A	Discrepancy Resolution: Removal of EPA HWN D042 from INL waste (D117A)	Randall C. Morris, PhD	04/30/2014
P001A	WO-4500-H	TRU Waste Compliance Program for WIPP-WAC (U). (WO-4500-H)	Rockwell International	1/16/1989

Implementing Document: MP-TRUW-8.13

TRACKING NUMBER	DOCUMENT NUMBER	DOCUMENT TITLE/DESCRIPTION	DOCUMENT AUTHOR	DOCUMENT DATE
P002A	RFP-4095	Organic and Sludge Immobilization System. RFP-4095, Petersen, R.D. (RFP -4095)	Petersen, R.D.	N/A
P003A	WC-4500-D	Quality Assurance Program for TRU Waste Certification. WC-4500-D, Rockwell International (WC-4500-D)	Published by Rockwell Waste Certification. Obtained from EG&G Rocky Flats Transuranic Waste Program Files (J. O'Leary)	10/28/1988
P004A	N/A	Rocky Flats Plant Waste Management Site Plan	Rockwell Waste Operations	12/1/1987
P005A	Traffic 300-1	Procedure for Labeling and Marking Unclassified TRU Waste Containers for Shipment to INEL. Traffic 300-1, Rockwell International (Traffic 300-1)	Published by Rockwell Traffic. Obtained from Transuranic Waste Programs.	07/01/1988
P006A	RFP-3739	Gas Generation Results and Venting Study for Transuranic Waste Drums RFP-3739 (RFP-3739)	A. R. Kazanjian, P. M. Arnold, W. C. Simmons, and E. L. D'Amico	9/23/1985
P007A	WO-4000-A	Waste Operations Internal Document Control for Documents Pertaining to the WIPP-WAC. (WO-4000-A)	Rockwell Waste Operations	1/9/1989
P008A	I-1002-C/0	Packaging and Handling Line- and Nonline-Generated Materials (U) (I-1002-C/0)	Rockwell International	4/26/1988
P009A	CSE 80-0017	Characterization and Categorization Study of TRU Waste for EG&G. CSE 80 -0017, Luckett, L.L. and P.T. Faccini (CSE 80-0017)	Luckett, L.L. and P.T. Faccini	N/A
P010A	WC-4003-I	Solid Waste Inspection. WC-4003-I. Revisions A-I incorporated into document., Rockwell International (WC-4003-I)	Rockwell International, Copy obtained from Transuranic Waste Programs at RFP.	02/07/1990
P011A	N/A	FY-1987 Waste Operations Operating Plan, Rockwell International	Rockwell International	1987
P012A	DOE/WIPP 01-3194	TRUPACT-II Content Codes (TRUCON). 89-004, Rev. 6 (DOE/WIPP 01-3194)	DOE/WIPP	06/01/2005
P013A	PSD87-059	EG&G Sampling Program Results FY 1987. PSD87-059, Watson, L.E. (PSD87-059)	Rockwell International	12/1/1987
P014A	CO-4500-A	TRU Waste Certification Program for WIPP-WAC (U). (CO-4500-A)	Rockwell International	5/24/1983

Implementing Document: MP-TRUW-8.13

TRACKING NUMBER	DOCUMENT NUMBER	DOCUMENT TITLE/DESCRIPTION	DOCUMENT AUTHOR	DOCUMENT DATE
P015A	EGG-WM-6503	TRU Waste Sampling Program: Volume I - Waste Characterization (EGG-WM-6503)	Clements, Thomas L. Jr., and Donald E Kudera	09/00/1985
P016A	INEL-95/0281	Idaho National Engineering Laboratory Code Assessment of the Rocky Flats Transuranic Waste (INEL-95/0281)	Wastren, Inc.	07/00/1995
P017A	RFP-4604	Preliminary Assessment of Real-Time Radiography and Visual Characterization for Selected Waste Categories. (RFP-4604)	Ziegler, D. L., and R. V. Harder.	10/22/1993
P018A	RFP-4311	Waste Drum Gas Generation Sampling Program at Rocky Flats During FY1988 (RFP-4311)	D.K. Roggenthen, T.L. McFeeters, R.G. Nieweg	2/11/1991
P019A	RFP-4171	HEPA Filter Optimization/Implementation (RFP-4171)	Nenni, J. A.	2/10/1998
P020A	RFP-3357	Characteristics of Transuranic Waste at Department of Energy Sites. (RFP-3357)	Jensen, R. T., and F. J. Wilkinson III.	05/00/1983
P021A	PSD86-061	EG&G Drum Sampling Program Results FY 1986 (PSD86-061)	P. M. Arnold	10/00/1986
P022A	PSD089-011	EG&G Sampling Program Results FY 1989. Watson. L. E. PSD89-011, (PSD089-011)	Watson. L. E.	2/1/1989
P023A	N/A	(Task 5 Draft Report) Estimating Historical Emissions from Rocky Flats	Prepared by ChemRisk for the Colorado Department of Health.	11/1/1992
P024A	WM-F1-82-021	Content Code Assessments for INEL Contact-Handled Stored Transuranic Wastes (WM-F1-82-021)	T. L. Clements, Jr.	10/00/1982
P025A	N/A	Standard for DOT-17C 55 Gallon Drum. Rocky Flats Plant STD No. SX-200 (formerly P.E. No. P12413). Revisions A (original) through G incorporated into document. Original Issue: August 9, 1977. Revision G: June 30, 1986.	Rockwell International.	6/30/1986
P026A	WC-4003-A	Transuranic Solid Waste Inspection (U) (WC-4003-A)	Rockwell International	11/11/1985
P027A	WIPP/DOE - 069	TRU Waste Acceptance Criteria for the waste Isolation Pilot Plant. WIPP/DOE. WIPP/DOE-069. Rev. 3. Document's Forward describes Revisions 1, 2, and 3. (WIPP/DOE - 069)	Published by Westinghouse Electric Corporation. Obtained from WASTREN office library.	1/1/1989
P028A	WIPP-DOE-144	TRU Waste Certification Compliance Requirements for Acceptance of Newly Generated Contact-Handled Wastes to be Shipped to the Waste Isolation Pilot Plant. (WIPP-DOE-144)	Published by Westinghouse Electric Corporation	01/01/1989

Implementing Document: MP-TRUW-8.13

TRACKING NUMBER	DOCUMENT NUMBER	DOCUMENT TITLE/DESCRIPTION	DOCUMENT AUTHOR	DOCUMENT DATE
P029A	RFP-3345.	Safety Analysis Report for Packaging – Corrugated Steel Container (SAND Box) for DOE Specification 7A Packaging. (RFP-3345.)	Ronald P. Brugger	5/16/1983
P030A	WPS 89-001	Drop Test of DOT Specification 7A Type A Metal Corrugated Box (SANDbox) with a ¾" Plywood Liner. (WPS 89-001)	L. A. Bearly and J. K. Paynter	6/7/1989
P031A	WPS 88-001	Full-Scale Drop-Impact Tests with DOT Specification 7A Waste Containers. (WPS 88-001)	L. A. Bearly, J. K. Paynter, and E. F. Lombardi.	12/9/1988
P032A	WC-4004-A	Waste Item Description Code Manual (WC-4004-A)	Published by Rockwell International Waste Certification.	04/01/1987
P033A	INEL-95/0397	Summary of Transuranic Waste Characterization Programs at the INEL (1979 -Present) (INEL-95/0397)	Sheila Hailey.	9/1/1995
P034A	HSE 21.01	Health, Safety & Environment Manual. Disposal of Excess Chemicals, Waste Oils, and Organic Solvents (HSE 21.01)	Published by Rockwell Energy Systems Group.	7/23/1982
P035A	N/A	Backlog Residues at the DOE Rocky Flats Plant: Residue IDC Descriptions.	DOE Rocky Flats Plant	9/1/1993
P036A	IAEA-SR-10/26	Radioactive Waste Package Development at the Rocky Flats Plant. (IAEA-SR-10/26)	Richard J. Melini, David L. Cash, and Kazuji Terada.	N/A
P037A	N/A	Rocky Flats Environmental Technology Site 1995 Annual Land Disposal Restriction Progress Report.	Published by US DOE Rocky Flats Field Office.	3/31/1995
P038A	CE-010-001	Residue Elimination Project Residue Analysis Study. (CE-010-001)	EG&G Rocky Flats	10/22/1992
P039A	1-M12-WO-4034	Rocky Flats Plant Radioactive Waste Packaging Requirements. (1-M12-WO-4034)	Published by EG&G Rocky Flats Radioactive Waste Programs	9/1/1994
P040A	CO-4017-F	Operating the Building 771 Waste Collection System (Decontamination Shower and Process Sinks)(U). (CO-4017-F)	Rockwell Waste Operations.	9/24/1984
P041A	WO4026-A/O	Waste Receiving and Transferring, Second Stage Tanks (U) (WO4026-A/O)	Rockwell Waste Operations.	11/9/1987
P042A	WO-4004-A	Liquid Waste Processing (Second Stage) (U). (WO-4004-A)	Rockwell Waste Operations.	1/1/1987
P043A	WO-4500-F	TRU Waste Compliance Program for WIPP-WAC (U). (WO-4500-F)	Rockwell Waste Programs	1/19/1987
P044A	94-RF-06806	Evaluation of RFP TRU/TRU-Mixed Inventory for Compliance with Selected WIPP and TRAMPAC Requirements. (94-RF-06806)	Published by EG&G Rocky Flats.	6/22/1994

Implementing Document: MP-TRUW-8.13

TRACKING NUMBER	DOCUMENT NUMBER	DOCUMENT TITLE/DESCRIPTION	DOCUMENT AUTHOR	DOCUMENT DATE
P045A	SX-231	Standard for Corrugated Metal Waste Container (Steel Box). (SX-231)	Published by Rockwell International.	8/28/1983
P046A	RFP-2444 (Draft).	ATMX-600 Rail Car Safety Analysis Report. (RFP-2444 (Draft).)	Published by Rockwell International Product Engineering and Nuclear Safety. Copy obtained from J. K. Paynter's files	10/1/1985
P047A	WO-5014	Filtering, Drying, Conveying, Cementing, and Packaging Sludge (U). (WO-5014)	Rockwell Waste Operations	1987.
P048A	WO-4040	Waste Operations Supplies (WO-4040)	Rockwell Waste Operations	10/22/1989
P049A	N/A	Annual Land Disposal Restriction Progress Report. Rocky Flats Plant. 1994.	Published by US Department of Energy Rocky Flat Office at Golden, CO.	3/31/1994
P050A	WIPP-DOE-069	Waste Acceptance Criteria for the Waste Isolation Pilot Plant. (WIPP-DOE-069)	Published by DOE/WIPP. Copy obtained from WASTREN office library	12/1/1991
P051A	N/A	Rocky Flats Environmental Technology Site Proposed Site Treatment Plan. Background Volume and Compliance Plan Volume.	Published by U.S. DOE Rocky Flats Field Office at Golden, CO	3/30/1995
P052A	NA	Rocky Flats Environmental Technology Site (RFETS) Backlog Waste Reassessment Baseline Book (BWRBB) (NA)	Rocky Mountain Remediation Services, LLC	5/5/1994-3
P053A	N/A	(Tasks 3 & 4 Final Draft Report) Reconstruction of Historical Rocky Flats Operations and Identification of Release Points.	ChemRisk	8/1/1992
P054A	WO-4016-E	Handling Miscellaneous Wastes in Size Reduction Building 776. (WO-4016-E)	Published by Rockwell Waste Operations	8/15/1988
P055A	CO-3002	Inspection of Raschig Rings in Contaminated Tanks (CO-3002)	Rocky Flats Plant, Rockwell Operational Compliance and Controol.	11/3/1988
P056A	CO-3001	Removal and Replacement of Raschig Rings (CO-3001)	Rocky Flats Plant, Rockwell Operational Compliance and Control	10/9/1989

Implementing Document: MP-TRUW-8.13

TRACKING NUMBER	DOCUMENT NUMBER	DOCUMENT TITLE/DESCRIPTION	DOCUMENT AUTHOR	DOCUMENT DATE
P057A	771.037	Operational safety analysis for Raschig ring inspection, removal, and replacement (771.037)	Rockwell Plutonium Operations	7/31/1989
P058A	N/A	Rocky Flats Plant Hazardous Waste Determination Status Report No. 2	Wastren, Inc.	9/16/1991
P059A	FO-0015	Graphite Process Operations in Building 707 (FO-0015)	Rocky Flats Technical Operations Control	1991
P060A	707-V3.2	Waste Stream and Residue Identification and Characterization Building 707 (707-V3.2)	Wastren, Inc.	1992
P061A	771-V3.2.	Waste Stream and Residue Identification and Characterization Building 771. 771-V3.2. 1992. (771-V3.2.)	WASTREN, Inc.	1992
P062A	779-V3.2	Waste Stream and Residue Identification and Characterization Building 779. 779-V3.2. (779-V3.2)	WASTREN, Inc.	1991.
P063A	WO-4034-C	Packaging Wastes for Shipment Offsite (U). (WO-4034-C)	Rockwell Waste Operations	10/13/1986
P064A	WO-4034	Rocky Flats Plant Radioactive Waste Packaging Requirements (WO-4034)	Rocky Flats	7/8/1988
P065A	000195	Material Safety Data Sheet for Purifloc (R) A23 Flocculant. (000195)	Dow Chemical U.S.A. , Copy obtained from MSDS Book in Building 774.	3/1/1985
P066A	N/A	Material Safety Data Sheet for ENVIROSTONE (and related data).	United States Gypsum Company. Copy obtained from MSDS Book in Building 774.	5/12/1986
P067A	N/A	Waste Stream Identification and Characterization, Area 4, Volume 1.	U.S. D.O.E. -- Rocky Flats Plant	4/6/1987
P068A	N/A	Chemical Safety Bulletins Building 81 – 83. The Dow Chemical Company. Rev. 7-18-62.	The Dow Chemical Company	7/18/1962
P069A	6016-01	Nuclear Materials Control Elements printout. SAN Database. (6016-01)	Copy obtained from Al Morgan, Safe Sites of Colorado.	6/1/1984
P070A	774.001	Operational Safety Analysis (OSA). Waste Receipt and Processing No. 774.001. (774.001)	Copy obtained from Building 774 Operations.	4/19/1995

Implementing Document: MP-TRUW-8.13

TRACKING NUMBER	DOCUMENT NUMBER	DOCUMENT TITLE/DESCRIPTION	DOCUMENT AUTHOR	DOCUMENT DATE
P071A	WO-2026	Waste Receiving and Transferring (Second Stage) Bldg. 774. (WO-2026)	RF Waste Operational control Systems	4/20/1990
P072A	WO-2010	EG&G Rocky Flats Plant Waste Operations Procedures Nuclear Safety Related Category 3. TRU Organic Sampling and Transferring, Buildings 707 and 777. (WO-2010)	EG&G RF	4/23/1991
P073A	A-008-LWTO	Process Qualifications Report for Miscellaneous Waste Handling and Solidification (Bottlebox) Building 774. (A-008-LWTO)	Copy obtained from Document Control.	9/15/1993
P074A	WO-4007-B	Plutonium Recovery Waste Collection System, Building 771. (WO-4007-B)	RF Liquid Waste Treatment Operations	10/12/1988
P075A	WO-4001-A	Liquid Waste Processing (First Stage). (WO-4001-A)	Waste Operations	10/12/1988
P076A	N/A	Waste Stream Residue Identification and Characterization Building 559. 559-V3.2.	WASTREN, Inc	1991.
P077A	774-V3.2	Waste Stream Residue Identification and Characterization Building 774. 774-V3.2. 1992. (774-V3.2)	Prepared by WASTREN, Inc., for EG&G Rocky Flats, Inc. Copy obtained from RMRS microfilm records.	1992
P078A	776-V3.2	Waste Stream Residue Identification and Characterization Building 776. 776-V3.2 1992. (776-V3.2)	Prepared by WASTREN, Inc., for EG&G Rocky Flats, Inc. Copy obtained from RMRS microfilm records.	1992
P079A	777-V3.2	Waste Stream Residue Identification and Characterization Building 777. 777-V3.2. 1992. (777-V3.2)	N/A	1992
P080A	ISSN 0738-0232	RCRA Land Disposal Restrictions: A Guide to Compliance. 1995 Edition. The Hazardous Waste Consultant. Vol. 12, Issue 6. ISSN 0738-0232. October /November 1994. (ISSN 0738-0232)	Wastren, Inc.	OCT/NOV94
P081A	371-V3.2	Waste Stream Residue Identification and Characterization Building 371. 371-V3.2. 1992. (371-V3.2)	Prepared by WASTREN, Inc., for EG&G Rocky Flats, Inc. Copy obtained from RMRS microfilm records.	1992

Implementing Document: MP-TRUW-8.13

TRACKING NUMBER	DOCUMENT NUMBER	DOCUMENT TITLE/DESCRIPTION	DOCUMENT AUTHOR	DOCUMENT DATE
P082A	374-V3.2	Waste Stream Residue Identification and Characterization Building 374. 374-V3.2. 1992. (374-V3.2)	Prepared by WASTREN, Inc., for EG&G Rocky Flats, Inc. Copy obtained from RMRS microfilm records.	1992
P083A	N/A	Waste Stream and Residue Identification and Characterization Database.	Rocky Mountain Remediation Services	1996
P084A	N/A	Material Safety Data Sheet for Varsol 1. Exxon Company, U.S.A. August 25 1986.	Exxon Chemical Company; Copy obtained from the WASTREN, Inc., library.	8/25/1986
P085A	RFP-3682	Waste Systems Progress Report March 1983 through February 1984. Gordon L. Hickle. RFP-3682. (RFP-3682)	Gordon L. Hickle	10/1/1984
P086A	RFP-2899	Neptunium Processing at the Rocky Flats Plant RFP-2899 (RFP-2899)	W. V. Conner, D. L. Baaso	9/20/1981
P087A	RFP-3256.	Nondestructive Radioassay for Waste Management – An Assessment. (RFP-3256.)	Rockwell International	6/1/1981
P088A	RFP-1424	Glovebox Window Materials. Charles W. Jacoby. RFP-1424. 1970. (RFP-1424)	Charles W. Jacoby; Prepared by Rockwell International. Copy obtained from RFP library, Building 706.	3/13/1970
P089A	RFP-3871	Waste Stystems Progress Report March 1984 through February 1985. Gordon L. Hickle. RFP-3871. 1986. (RFP-3871)	Gordon L. Hickle; Prepared by Rockwell International. Copy obtained from RFP library, Building 706.	4/11/1986
P090A	RFP-3186	History of Rocky Flats Waste Streams (RFP-3186)	Lori L. Luckett, Alice A. Dickman, Charlene R. Wells, and Donald J. Vickery	3/10/1982
P091A	N/A	Materials Hazards Manual. Rocky Flats Hazardous Materials Committee. 1976.	Copy obtained from J. K. Paynter's files.	8/1/1976
P092A	CO-1026-T/0	Residue Dissolution (Lines 23 and 25) (CO-1026-T/0)	Rocky Flats Plant	10/1/1988

Implementing Document: MP-TRUW-8.13

TRACKING NUMBER	DOCUMENT NUMBER	DOCUMENT TITLE/DESCRIPTION	DOCUMENT AUTHOR	DOCUMENT DATE
P093A	CO-1130-B/0	Residue Dissolution, Gloveboxes 1500 A, 1500 B, and 1515, Building 371 (U).CO-1130-B/0, Rev. 0. Version B of procedure. 1988. (CO-1130-B/0)	Produced by Operational Compliance and Control. Copy obtained from Source One Document Control, Building T130G.	10/1/1988
P094A	CO-2018-E/0	Special Recovery Operation, General Procedures (CO-2018-E/0)	Rocky Flats Plant	10/1/1988
P095A	CO-2017-B/0	Plutonium-Neptunium Separation (CO-2017-B/0)	Rocky Flats Plant	5/5/1987
P096A	CO-2010	Operating the Ion Columns (Special Recovery, Line MT-4) (CO-2010)	Operational Compliance and Control.	9/20/1989
P097A	CO-6017-C	HSA Incineration System, Scarfing and Grinding (CO-6017-C)	Rocky Flats Plant Recycle Operations	6/5/1984
P098A	CO-1027	Resin Cementing, Line 2 (CO-1027)	Rocky Flats Plant, Operational Compliance and Control	11/3/1988
P099A	CO-1012-G	Molten Salt (8%) Residue Process (line 30) (U). (CO-1012-G)	RF Operational Compliance and Control	12/22/1978
P100A	CO-1019-K/0	Leaching Tantalum Fixtures and Inserts (Line 5) (CO-1019-K/0)	Rocky Flats Plant	9/24/1988
P1000A	CPS-Z-165-80716	Glovebox MT 6: Solution Clarification (CPS-Z-165-80716)	Plutonium Finishing Plant	NONE
P1001A	CPS-165-80701	Process Cell (CPS-165-80701)	Plutonium Finishing Plant	01/12/1995
P1002A	CPS-Z-165-80731	Slag and Crucible Processing Gloveboxes (CPS-Z-165-80731)	Plutonium Finishing Plant	09/19/1989
P1003A	ZO-160-040	Operate Glovebox 60 (ZO-160-040)	C.M. Kronvall	1981, 1987
P1004A	ZO-170-005	Handling of Plutonium Contaminated Acid and Water Soaked Rags (ZO-170-005)	Plutonium Finishing Plant	NONE
P1005A	n/a	Investigation of Chemical Explosion of an Ion Exchange Resin Column and Resulting Americium Contamination of Personnel inthe 242-Z Building (n/a)	n/a	N/A
P1006A	ZO-300-110	Sample Plutonium Bearing Powders for the International Atomic Energy Agency (IAEA) (ZO-300-110)	Plutonium Finishing Plant	08/21/1995
P1007A	ZO-200-505	Recan Plutonium-Bearing Recoverable Material (ZO-200-505)	EP Bonadie	09/11/1996
P1008A	ZO-170-014	Handle PFP Reactive Material (ZO-170-014)	C Barr, GB Chronister	Multiple

Implementing Document: MP-TRUW-8.13

TRACKING NUMBER	DOCUMENT NUMBER	DOCUMENT TITLE/DESCRIPTION	DOCUMENT AUTHOR	DOCUMENT DATE
P1009A	ZO-170-015	Handle and Package TRU Solid Waste in 55 Gallon Drums (ZO-170-015)	Plutonium Finishing Plant Operations	N/A
P101A	CO-2005-K/0	Modified Purex Solvent Extraction Process (Special Recovery; Lines MT-3, MT-7) (CO-2005-K/0)	Rocky Flats Plant, Operational Compliance and Control.	10/1/1988
P1010A	ZL-100-323	Solid Waste Repackaging and Disposal (ZL-100-323)	PFP Analytical Laboratory	09/18/1998
P1011A	PNL-MA-860	Methods and models of the Hanford Internal Dosimetry Program (PNL-MA-860)	E.H. Carbaugh	01/31/2003
P1012A	n/a	Plutonium Process Support Laboratories (n/a)	D. Lini	06/21/2004
P1013A	HNF-30862	Engineering Evaluation/Cost Analysis for the Plutonium Finishing Plant Sub-Grade Structures and Installations (HNF-30862)	L. Oates, J.A. Teal, A.M. Hopkins, A.R. Sherwood, D.D. Lini	08/01/2006
P1014A	DOE/RL-93-104	D&D Assessment for the Waste Incineration Facility (Building 232-Z) Hanford Site, Washington (DOE/RL-93-104)	L.N. Dean	02/01/1994
P1015A	HNF-4371	241-Z-361 Sludge Characterization Sampling and Analysis Plan (HNF-4371)	F. R. Crawford	07/29/1999
P1016A	n/a	Clarification on PFP Lead Lined Gloves (n/a)	C. Simiele	06/15/2000
P1017A	Z0-160-080	Plutonium Finishing Plant Stabilization Operations Technical Procedure - Pipe-N-Go Operations (Z0-160-080)	n/a	05/03/2006
P1018A	FSP-PFP-5-8	Nuclear Material Transfer and Control (FSP-PFP-5-8)	Plutonium Finishing Plant Administration	06/08/1998
P1019A	FSP-PFP-5-8	Nuclear Control General Requirements (FSP-PFP-5-8)	Plutonium Finishing Plant Administration	NONE
P102A	CO-1033-AA/0	Anion Exchange (Lines 42 and 43D) (CO-1033-AA/0)	Rocky Flats Plant	9/16/1988
P1020A	HNF-32534-FP	Contaminated Process Equipment Removal for the D&D of 232-Z Contaminated Waste Recovery Process Facility at the Plutonium Finishing Plant (HNF-32534-FP)	M.J. Minette	01/01/2007
P1021A	ERDA-1538	Final Environmental Statement, Waste Management Operations, Hanford Reservation, Richland, Washington (ERDA-1538)	J.L. Liverman	NONE
P1022A	BHI-00175	Z Plant Aggregate Area Management Study Technical Baseline Report (BHI-00175)	D.H. DeFord	NONE

Implementing Document: MP-TRUW-8.13

TRACKING NUMBER	DOCUMENT NUMBER	DOCUMENT TITLE/DESCRIPTION	DOCUMENT AUTHOR	DOCUMENT DATE
P1023A	HNF-36515	Acceptable Knowledge Document for Richland Mixed Plutonium Finishing Plant Comprehensive Debris Waste Stream RLMPFPCD (HNF-36515)	D. Rollosson	06/05/2009
P1024A	HNF-6489	Acceptable Knowledge Document for Plutonium Finishing Plant Mixed Debris Waste Stream MPFPD (HNF-6489)	M. I. Rollosson	09/21/2006
P1025A	HNF-30810	Acceptable Knowledge Document for the 325 Building Radiochemistry Laboratory Mixed Debris Waste Stream RLM325D (HNF-30810)	M. Conilogue	07/17/2007
P1026A	HNF-32128	Acceptable Knowledge Document for Richland 231-Z Mixed Debris Waste Stream RLM231ZD (HNF-32128)	M. I. Rollosson	05/20/2008
P1027A	RHO-ST-44	216-Z-12 Transuranic Crib Characterization: Operational History and Distribution of Plutonium and Americium (RHO-ST-44)	R.B. Kasper	NONE
P1028A	WHC·WM·EV·023	Waste Minimization Plan PFP (WHC·WM·EV·023)	E. G. Backlund,	NONE
P1029A	PFD-Z-180-00001	PRF Solvent Extraction Depletion Flowsheet-High Uranium/High Fluoride Feed (PFD-Z-180-00001)	PFP Process Engineering Group	06/20/1988
P103A	CO-1005-J/O	Sand, Slag, and Crucible Size Reduction, Lines 43A and C (U). (CO-1005-J/O)	RF Operational Compliance and Control	10/28/1988
P1030A	N/A	BN510.1 Supercompacted Debris Waste Stream Profile Package	AMWTP	09/10/2010
P1031A	RPT-TRUW-86	Identification of Pack Dates for Waste Potentially Included in the AMWTP Inventory (RPT-TRUW-86)	AMWTP	CURR DATE
P1033A	WHC-EP-0659	Characterization of Past and Present Solid Waste Streams from 231-Z (WHC -EP-0659)	D.R. Duncan, J.A. Pottmeyer	06/01/1993
P1034A	BNWL-CC-1924	Safety Analysis Report (BNWL-CC-1924)	C.S. Powers	03/01/1969
P1035A	BNWL-B-479, UC-70	Detailed Plan for the Decontamination and Restoration of the 231-Z Facility (BNWL-B-479, UC-70)	R.R. King	03/01/1976
P1036A	WHC-SD-W026-ES-013	Wrap Module 1 Sampling Strategy and Waste Characterization Alternatives Study (WHC-SD-W026-ES-013)	C.L. Bergeson, R.A. Hyre	09/01/1994
P1037A	WHC-MR-0425	Manhattan Project Building and Facilities at the Hanford Site, A Construction History (WHC-MR-0425)	M. S. Gerber	09/01/1993
P1038A	n/a	Hanford Facility Beryllium Fact Sheet (n/a)	K.H. Jaten	02/01/2004
P1039A	n/a	TRU Waste Decontamination: A Progress Update (1978 - 1980) (n/a)	R.P. Allen, H.W. Arrowsmith	01/01/1981

Implementing Document: MP-TRUW-8.13

TRACKING NUMBER	DOCUMENT NUMBER	DOCUMENT TITLE/DESCRIPTION	DOCUMENT AUTHOR	DOCUMENT DATE
P104A	CO-1076-D	Scarfing Graphite (Line 43A) (CO-1076-D)	Rocky Flats Plant	9/29/1988
P1040A	WMP-370, Section 1.1.5	Review and Update of Isotope Data for Retrieval of Transuranic Waste (WMP -370, Section 1.1.5)	Fluor Hanford WSD Procedures/Waste Services	01/24/2005
P1041A	SAND2005-4331	An Analysis of Uranium Dispersal and Health Effects Using a Gulf War Case Study (SAND2005-4331)	Albert C. Marshall	07/01/2005
P1042A	n/a	Closing the Circle on the Splitting of the Atom: The Environmental Legacy of Nuclear Weapons Production in the United States and What the Department of Energy is Doing About it (n/a)	U.S. Department of Energy	01/01/1995
P1043A	n/a	231-Z TRU Debris Waste Stream Designation (n/a)	M.S. Watson	03/01/2005
P1044A	ARH-3032	Specifications and Standards for the Packaging, Storage and Disposal of Richland Operations Solid Wastes (ARH-3032)	J.D. Anderson	04/29/1974
P1045A	n/a	325 Radiochemical Processing Laboratory website (n/a)	G. Patello	12/18/2006
P1046A	DUN-7243 RD	Experimental Isotopic Analysis of Point Exposure Data in Hanford Production Reactor (DUN-7243 RD)	H. Toffer, A.F. Kupinski	09/08/1970
P1047A	WHC-MR-0437	A Brief History of the PUREX and UO3 Facilities (WHC-MR-0437)	M.S. Gerber	11/01/1993
P1048A	ORAUT-TKBS-006-2	ORAU Team, NIOSH Dose Reconstruction Project, Technical Basis Document for the Hanford Site - Site Description. (ORAUT-TKBS-006-2)	J. Selby	12/29/2004
P1049A	DOE/RL-96-29	Historic American Engineering Record Reduction-Oxidation Complex Plutonium Concentration Facility (Building 233-S) (DOE/RL-96-29)	M.S. Gerber, D.W. Harvey	N/A
P105A	771.047	Operational Safety Analysis (OSA). Special Recovery Ion Exchange. No. 771.047. (771.047)	Rocky Flats Operational Compliance and Control	9/6/1989
P1050A	WHC-EP-0646	Characterization of Past and Present Solid Waste Streams from th Plutonium -Uranium Extraction Plant (WHC-EP-0646)	J.A. Pottmeyer, D.R. Duncan	N/A
P1051A	WHC-EP-0621	Characterization of Past and Present Solid Waste Streams from the Plutonium Finishing Plant (PFP) (WHC-EP-0621)	D.R. Duncan, B.A. Mayancsik	N/A
P1052A	HNF-10919	Plutonium Finishing Plant Plutonium-Uranium Oxide: Characterization of Items with <30 Weight Percent Plutonium (HNF-10919)	D.C. Lini and L.H. Rodgers	03/01/2002

TRACKING NUMBER	DOCUMENT NUMBER	DOCUMENT TITLE/DESCRIPTION	DOCUMENT AUTHOR	DOCUMENT DATE
P1053A	9650398	Tritium Production at the Fast Flux Test Facility (9650398)	D.B. Klos	02/01/1996
P1054A	M4T00-TRU-06-640	White Paper: Calculation of Isotopic Weight Percentages Using Tank Waste Information Network System (TWINS) Data for the PUREX facility (M4T00-TRU-06-640)	M.H. Conilogue	10/11/2006
P1055A	WRP1-OP-0908	Waste Receiving and Processing (WRAP) Facility Operating Procedure for Operation of the Drum Nondestructive Examination System (WRP1-OP-0908)	n/a	09/09/2008
P1056A	HNF-5597	Retrieval Process Description (HNF-5597)	n/a	03/31/2004
P1057A	HNF-4781	Transuranic (TRU) Waste Phase I Retrieval Plan (HNF-4781)	Kent McDonald	09/26/2000
P1058A	HNF-SD-W026-SAR-002	WRAP Final Safety Analysis Report (HNF-SD-W026-SAR-002)	T.A. Tomaszewski	07/01/2001
P106A	374-V5.0	Waste Stream Residue Identification and Characterization Building 374. 374-V5.0. (374-V5.0)	WASTREN,Inc.	
P1061A	PFD-Z-190-00002	Process Flowsheet Document, Remote mechanical C (RMC) Line, PFP (PFD -Z-190-00002)	A. M. Stubbs, J.F. Durnil	06/18/1991
P1062A	BNWL-CC-1336	Preliminary FFTF Fuel Raw Materials Survey and Analysis (BNWL-CC-1336)	R.E. Beardsly	04/10/1976
P1063A	HW-10733	REDOX Process Waste Streams Approximate Quanitities and Compounds (HW-10733)	n/a	08/12/1948
P1064A	WHC-EP-0172	Westinghouse Hanford Company Inventory of Chemicals Used at Hanford Site Production Plants and Support Operations (1944-1980) (WHC-EP-0172)	J.T. Quigley	04/01/1990
P1065S	ZO-170-061	Package TRU/TRU Mixed Waste (ZO-170-061)	Plutonium Finishing Plant	04/28/2008
P1066A	HNF-SD-CP-TI-219	Plutonium Finishing Plant Chemical Hazard Assessment (HNF-SD-CP-TI-219)	G.R. Witman, E.V. Weiss	September
P1067A	CCP-AK-RL-003	Central Characterization Project Acceptable Knowledge Summary Report for Hanford Site 325 Radiochemistry Building Transuranic Debris (CCP-AK-RL-003)	D.H. Haar	11/26/2003
P1068A	n/a	Hanford Facility Beryllium Fact Sheet (n/a)	S.A. Seydel	06/30/2004
P1069A	03-ABD-0071	Safety Evaluation Report for the Stabilization Processing of High Chloride Bearing Plutonium Materials at the Plutonium Finishing Plant (03-ABD-0071)	K.A. Klein	04/17/2003

Implementing Document: MP-TRUW-8.13

TRACKING NUMBER	DOCUMENT NUMBER	DOCUMENT TITLE/DESCRIPTION	DOCUMENT AUTHOR	DOCUMENT DATE
P107A	559-V5.0	Waste Stream Residue Identification and Characterization Building 559. 559-V5.0 (559-V5.0)	WASTREN, Inc.	11/18/1993
P1070A	WHC-SC-CP-TI-204	Stabilization of Polycubes Engineering Study Historical Use and Fabrication and Treatment Schemes (WHC-SC-CP-TI-204)	W.S. Lewis	07/08/1996
P1071S	SW-100-096	(TRU) Overpack Containers (SW-100-096)	n/a	11/12/2009
P1072A	HW-22604	RECUPLEX Process Chemical Flowsheets, RECUPLEX HW#1 and HW#2 (HW-22604)	C. Groot, R.E. Tomlinson, D.P. Granquist	11/01/1951
P1073A	RHO-CD-454	Safety Assessment Document-Z Plant RMA Oxide Line (RHO-CD-454)	D.L. Cahow, K.O. Fein, G.L. Hanson	September
P1074A	RHO-CD-644	Z Plant RMA Oxide Line Campaign Process Control Plan (RHO-CD-644)	R.L. Walser,R.E. Van der	01/01/1979
P1075A	RHO-CD-616	Z Plant RMA Oxide Line Flowsheet Addendum-Filtrate Concentration (RHO-CD-616)	R.L. Walser, R.E. Van der Cook	02/01/1979
P1076A	ZO-200-504	Plutonium Finish Plant Environmental Operations, Recan Plutonium Metal (ZO-200-504)	N/A	06/27/1994
P1077A	CPS-Z-165-80625	Criticality Prevention Specification, Incinerator Burning Hood Characterization and Disassembly Activities (CPS-Z-165-80625)	Westinghouse Hanford Company	05/08/1995
P1078A	CPS-Z-165-80012	Criticality Prevention Specification, Glovebox Clean-up Operations (CPS-Z-165-80012)	Westinghouse Hanford Company	05/08/1995
P1079A	M4TOO-TRU-04-472	Transmittal of the Waste Stream-Specific Document SS&C01 Rev. 5, for the Acceptable Knowledge Documentation Management Program for PFP Sand, Slag, and Crucible Waste. (M4TOO-TRU-04-472)	S.W. Bisping	06/17/2004
P108A	707-V5.0	Waste Stream and Residue Identification and Characterization Building 707. 707-V5.0. (707-V5.0)	Rocky Flats	1995
P1080A	N/A	Deactivation and Cleanout of the 308 Fuels Laboratory and the 232-Z Incinerator at the Hanford Site	Westinghouse Hanford Company	10/22/1999
P1081A	ARH-3079	Work Plan For Removal of Division of Military Application Equipment 234-5Z Building (ARH-3079)	H.E. Johnson	04/26/1974
P1082A	WHC-EP-0912	The History of the 200 Area Burial Ground Facilities (WHC-EP-0912)	J.D. Anderson	09/01/1996

Implementing Document: MP-TRUW-8.13

TRACKING NUMBER	DOCUMENT NUMBER	DOCUMENT TITLE/DESCRIPTION	DOCUMENT AUTHOR	DOCUMENT DATE
P1083A	N/A	Nuclear Weapons Frequently Asked Questions, Chapter 8.0 The First Nuclear Weapons	C. Sublette	04/18/2007
P1084A	CPS-Z-165-80727	Room 27: Maintenance Glovebox (CPS-Z-165-80727)	Westinghouse Hanford Company	09/18/1989
P1085S	9528.1989(13)	Interim Status Requirements For NRC Licensees Managing Radioactive Mixed Waste, Clarification (9528.1989(13))	EPA, Office of Solid Waste and Emergency Response (OSWER)	10/15/2019
P1086S	N/A	10 CFR Part 962 BYPRODUCT MATERIAL	NRC	05/01/1987
P1087A	SD-CP-SAR-021	PFP Final Safety Analysis Report (SD-CP-SAR-021)	J. E. Shapely	01/06/1995
P1088S	N/A	Joint NRC-EPA Draft Storage Guidance for Low-Level Mixed Waste	EPA/NRC	08/01/1995
P1089A	EPA-600/2-80-076 (NTIS / PB80-221005)	A Method for Determining the Compatibility of Hazardous Wastes (EPA-600/2-80-076 (NTIS / PB80-221005))	H. K. Hatayama, J. J. Chen, E. R. de Vera	04/01/1980
P109A	774-V5.0	Waste Stream Residue Identification and Characterization Building 774 (774-V5.0)	WASTREN, Inc.	1/19/1995
P1090A	RFP-1723	Evaluation of Methods to Recover Plutonium from Incinerator Ash (RFP-1723)	Donald L. Ziegler, John W. Lindsay, John K. Fraser	08/16/1971
P1091A	RFP-396	Recovery of Plutonium from Incinerator Ash (RFP-396)	F.E. Butler, J.D. Moseley, G.F. Molen	07/31/1964
P1092S	INST-OI-11	Waste Container Handling (INST-OI-11)	AMWTP	Cur Date
P1093S	INST-EC&P-7.28.1	AMWTP TSA-RE Soil Sampling Procedure (INST-EC&P-7.28.1)	AMWTP	Cur Date
P1094S	INST-OI-09	Retrieval Inspection Station Operations (INST-OI-09)	AMWTP	Cure Date
P1095S	INST-OI-84	Waste Container Repair and Overpack (INST-OI-84)	AMWTP	Cur Date
P1096S	INST-OI-88	Spill / Leak Response and Cleanup (INST-OI-88)	AMWTP	Cur Date
P1097S	INST-OI-93	Inverting Boxes (INST-OI-93)	AMWTP	Cur Date
P1098S	N/A	Idaho National Laboratory Site Treatment Plan	Published by U.S. DOE Idaho Operations Office at Idaho Falls, ID	Current

Implementing Document: MP-TRUW-8.13

TRACKING NUMBER	DOCUMENT NUMBER	DOCUMENT TITLE/DESCRIPTION	DOCUMENT AUTHOR	DOCUMENT DATE
P1099S	INST-FOI-32	Size Reduction of Large Items (INST-FOI-32)	AMWTP	02/20/2014
P110A	776-V5.0	Waste Stream Residue Identification and Characterization Building 776. 776-V5.0 (776-V5.0)	WASTREN, Inc.	11/18/1993
P1100A	RF135.01	RFETS WSP RF135.01, TRM Solidified Organic Waste (D022, D027, D029, D030, D032, D034, D036, D037, F001, F002) (RF135.01)	RFETS	03/23/2005
P1101A	RPT-TRUW-78	AMWTP Challenging Waste Forms and Disposition (RPT-TRUW-78)	AMWTP	11/28/2008
P1103S	INST-OI-43	HGAS Sampling and Analysis Operations (INST-OI-43)	AMWTP	Current
P1104S	INST-OI-45	Drum Filter Installation (INST-OI-45)	AMWTP	Current
P1105S	INST-OI-50	WMF-615 Filter Insertion Operations (INST-OI-50)	AMWTP	Current
P1106S	INST-OI-92	Drum Filter Removal and Replacement Operations (INST-OI-92)	AMWTP	Current
P1107S	INST-FOI-34	Shredder Pre-Filter Replacement (AFU-750-200 or AFU-750-201 ONLY) (INST-FOI-34)	AMWTP	Current
P1108A	RPT-TRUW-74	Decanted Liquid Chemical Compatibility and Hazard Evaluation (RPT-TRUW-74)	AMWTP	08/28/2007
P1109A	DOE/TRU-10-3425	Annual Transuranic Waste Inventory Report - 2010 (Data Cutoff Date 12/31/2009) (DOE/TRU-10-3425)	U. S. Department of Energy, Carlsbad Field Office Prepared by the Los Alamos National Laboratory – Carlsbad Operations (LANL-CO) TRU Waste Inventory Team	11/00/2010
P111A	777-V5.0	Waste Stream Residue Identification and Characterization Building 777. 777-V5.0. (777-V5.0)	WASTREN, Inc.	1992
P1110A	INST-FOI-25	Special-Case Waste Packet Monitor Operations (INST-FOI-25)	AMWTP; Owner J. Peter Hingston	Current
P1111S	PLN-015	Plan of Action for WMF-628 Drum Treatment Facility (Multi Function Enclosure) Readiness Assessment (PLN-015)	AMWTP (Douglas A. Wale owner)	05/31/2007
P1112A	FAC-SD-23	Special Case Waste (FAC-SD-23)	AMWTP	03/15/2007
P1113S	FAC-SD-25	Facility Packet Assay Monitors (FAC-SD-25)	AMWTP	06/12/2007

Implementing Document: MP-TRUW-8.13

TRACKING NUMBER	DOCUMENT NUMBER	DOCUMENT TITLE/DESCRIPTION	DOCUMENT AUTHOR	DOCUMENT DATE
P1114S	INST-FOI-15	Waste Box Shredding and Export Operations (INST-FOI-15)	AMWTP	04/17/2014
P1115A	RPT-006	Using Mechanical Vibration to Enhance Liquid Availability and Treatment in Drums Containing Sludge (RPT-006)	Rod E. Arbon	11/15/2007
P1116S	INST-OI-80	Unpacking Overpack Containers (INST-OI-80)	AMWTP	Cur date
P1117A	INST-OI-91	Drum Re-Overpacking Facility Operations (INST-OI-91)	AMWTP	03/03/2011
P1118A	MP-TRUW-8.2	Quality Assurance Project Plan (MP-TRUW-8.2)	AMWTP (owner: T.G. Fallon)	Current
P1119S	MP-EC&P-7.4	HEPA Filter Management Procedure (MP-EC&P-7.4)	AMWTP	Current
P112A	779-V5.0	Waste Stream Residue Identification and Characterization Building 779. 779-V5.0. (779-V5.0)	WASTREN, Inc.	1991
P1120S	INST-MI-1070	System 234 Pre-Filter Replacement (INST-MI-1070)	AMWTP Maintenance	12/22/2009
P1121A	INST-MI-1051	HVAC Pre-Filter Replacement (INST-MI-1051)	AMWTP	01/19/2008
P1122A	INST-MI-1001	Ventilation HEPA Filter Replacement (INST-MI-1001)	AMWTP	02/13/2007
P1123A	INST-MI-1082	System 235 Air Filter Replacement (INST-MI-1082)	AMWTP Maintenance	10/08/2010
P1124S	INST-OI-81	Real-Time Radiography Operations (for WIPP Certification of Boxes) (INST-OI-81)	AMWTP	12/29/2010
P1125S	INST-FOI-01	In-Plant Drum Assay Operations (INST-FOI-01)	AMWTP	12/02/2009
P1126A	INST-OI-73	Manual Drum Coring Operations (INST-OI-73)	AMWTP	Current
P1127A	INST-OI-75	Container-In-Container Sampling (INST-OI-75)	AMWTP	Current
P1128S	INST-MS-0111	Supercompactor Hydraulic Oil Change (INST-MS-0111)	AMWTP	05/21/2008
P1129S	INST-MS-0097	Removal of Maintenance Debris from the Supercompactor Glovebox Suite (INST-MS-0097)	AMWTP Maintenance	09/22/2009
P113A	N/A	Actinide Processing at Rocky Flats.	Rockwell North American Space Operations	1991
P1130S	N/A	Quintolubric 702-46, Quaker Chemical Corporation	Quaker Chemical Corporation	05/23/2002
P1131S	INST-OI-14	Drum Assay Operations (INST-OI-14)	AMWTP	Current
P1132S	INST-OI-15	Box Assay Operations (INST-OI-15)	AMWTP	Current

Implementing Document: MP-TRUW-8.13

TRACKING NUMBER	DOCUMENT NUMBER	DOCUMENT TITLE/DESCRIPTION	DOCUMENT AUTHOR	DOCUMENT DATE
P1133S	6105 TSCA C-I-2 OS-ETSD-1O-005	Notification About a Change in the Type of Absorbent Used Under the Advanced Mixed Waste Treatment Project Risk-Based Disposal Approval (OS-ETSD-IO -005.) (6105 TSCA C-I-2 OS-ETSD-1O-005)	David L. Wessman, DOE TSCA Compliance Manager	01/07/2010
P1134S	SR-W026-221F-HOM	AMWTP Form-1900, DOE CH-TRU Waste Profile for Savannah River Site, Building 221F, Absorbed Waste (SR-W026-221F-HOM)	Mark Doherty, AKE	09/05/2010
P1135A	CCP-AK-SRS-3	Central Characterization Project Acceptable Knowledge Summary Report for Savannah River Site Waste Streams: SR-W026-221F-HET, SR-W026-221F-HOM, SR-W026-221F-HEPA, SR-W026-221F-HET-A (CCP-AK-SRS-3)	Larry Porter	04/26/2010
P1136A	N/A	Approval of the Toxic Substance Control Act (TSCA) Risk-based Disposal Approval (RBDA) Application for management of transurancic Polychlorinated biphenyl (PCB) Remediation Waste at the Advanced mixed Waste Treatment Project (AMWTP) Facility		06/12/2007
P1137A	W0-4034-B	Packaging Waste for Shipment Offsite (W0-4034-B)	Rocky Flats Plant	01/31/1986
P1138A	RF107.0	Rocky Flats Environmental Technology Site WIPP Waste Stream Profile Form, TRU Solidified Organic Waste (RF107.0)	N/A	01/11/2005
P1139S	MP-RS&C-6.17	Use of Vacuum Cleaners and Portable Air Handling Equipment in Radiological Areas (MP-RS&C-6.17)	Radiological Control	Current
P114A	N/A	Federal Facilities Compliance Agreement Compliant Order Storage Report. 1990.	EG&G Rocky Flats Waste Programs.	5/1/1990
P1140S	INST-MS-0049	Replace Hydraulic Fluid in BROKK Manipulators (INST-MS-0049)	AMWTP Engineering & Maintenance	03/22/2005
P1141S	CCP-CM-013	CCP Transportation HSG Only - Flamable Gas Analysis (FGA) (CCP-CM-013)	Mark Pearcy, CCP	05/25/2007
P1142S	CCP-TP-082	CCP Waste Container Filter Vent Operations (CCP-TP-082)	Larry Porter, CCP	02/22/2011
P1143A	ID-ICP-MFC-Gloves	AMWTP Form-1900, AMWTP Offsite Waste Stream Profile for ID-ICP-MFC-Gloves, EFL Lead Gloves (AW-225) (ID-ICP-MFC-Gloves)	R. Rod Kimmit, Senior Advisory Engr.	03/14/2011
P1145A	LANL-CIN01.001	AMWTP Form-1900, DOE CH-TRU Waste Profile for LANL-CIN01.001, Los Alamos National Laboratory Solidified Inorganics (LA-006) (LANL-CIN01.001)	Mark Doherty, CCP AKE	12/03/2009

Implementing Document: MP-TRUW-8.13

TRACKING NUMBER	DOCUMENT NUMBER	DOCUMENT TITLE/DESCRIPTION	DOCUMENT AUTHOR	DOCUMENT DATE
P1146A	SNL-SA-T001-S5400	AMWTP Form-1900, AMWTP Offsite Waste Stream Profile for SNL-SA-T001-S5400, Lovelace Respiratory Research Institute Heterogeneous Debris Stored at Sandia National Laboratories (SL-223) (SNL-SA-T001-S5400)	Mark Doherty, CCP AKE	12/06/2010
P1147A	CCP-PK-SNL-001	Central Characterization Project Process Knowledge Summary Report for Lovelace Respiratory Research Institute Contact-Handled Transuranic Waste Stored at Sandia National Laboratories/New Mexico, Waste Stream: SA-T001 (CCP-PK-SNL-001)	Larry Porter	07/22/2010
P1148A	SNL-HFC-S5400	AMWTP Form-1900, AMWTP Offsite Waste Stream Profile for SNL-HFC-S5400, Sandia National Laboratories Hot Cell Facility Heterogeneous Debris (SL-224) (SNL-HFC-S5400)	Mark Doherty, CCP AKE	12/06/2010
P1149A	CCP-PK-SNL-002	Central Characterization Project Process Knowledge Summary Report for Sandia National Laboratories/New Mexico Hot Cell Facility Contact Handled Transuranic Waste (Debris), Waste Streams: SNL-HCF-S5400 (CCP-PK-SNL-002)	Larry Porter	06/03/2010
P115A	N/A	Solid Waste Information Management System Database.	Rocky Flats.	
P1150A	SNL-SOURCES-S5400	AMWTP Form-1900, AMWTP Offsite Waste Stream Profile for SNL-SOURCES-S5400, Radioactive Sources from Sandia National Laboratory (SL-227) (SNL-SOURCES-S5400)	Mark Dohery, CCP AKE	03/16/2011
P1151A	CCP-PK-SNL-003	Central Characterization Project Process Knowledge Summary Report for Sandia National Laboratories/New Mexico TRU Radioactive Sources (Debris), Waste Streams: SNL-SOURCES-S5400 (CCP-PK-SNL-003)	Larry Porter	03/14/2011
P1152A	SR-AGNS-HOM	AMWTP Form-1900, DOE CH-TRU Waste Profile for SR-AGNS-HOM, Barnwell Solidified Inorganic Waste stored at Savannah River Site (IDC SR-251) (SR-AGNS-HOM)	Craig Simmons, CCP SPM	08/09/2010
P1153A	SR-MD-HOM-C	AMWTP Form-1900, AMWTP Offsite Waste Stream Profile for SR-MD-HOM-C, Mound Site Inorganic Particulates Stored at Savannah River Site (SR-253) (SR-MD-HOM-C)	Mark Doherty, CCP AKE	07/26/2011

Implementing Document: MP-TRUW-8.13

TRACKING NUMBER	DOCUMENT NUMBER	DOCUMENT TITLE/DESCRIPTION	DOCUMENT AUTHOR	DOCUMENT DATE
P1154A	AECHHM-PK	AMWTP Form-1900, AMWTP Offsite Waste Stream Profile for AECHHM-PK, Argonne CH Homogeneous Solids (AE-254); AMWTP Form-1906, Non - AMWTP Waste Profile Environmental Checklist for Profile ID AECHHM-PK; AMWTP Form-1907 Non AMWTP Waste Profile Radiological Controls Checklist for Profile ID AECHHM-PK; AMWTP Form-1908, Non-AMWTP Waste Profile Acceptable Knowledge Checklist for Profile ID AECHHM-PK; AMWTP Form-1910, Non AMWTP Waste Profile Industrial Safety/ Industrial Hygiene (IS/IH) Checklist for Profile ID AECHHM-PK; AMWTP Form-2005, Offsite Waste Profile nuclear Safety Checklist for Profile ID AECHHM-PK. (AECHHM-PK)	Mark Doherty, CCP	05/11/2011
P1155A	CCP-PK-ANLE-001	Central Characterization Project Process Knowledge Summary Report for Argonne Contact-Handled TRU Waste From Facility Maintenance and Laboratory Operations, Waste Streams: AECHDM-PK and AECHHM-PK (CCP-PK-ANLE-001)	Larry Porter	08/10/2010
P1156A	ID-SDA-NO3	AMWTP Form-1687, Non-AMWTP Generator Waste Profile for ID-SDA-NO3, SDA Waste Containing Nitrate Salts (IDC SD-703) (ID-SDA-NO3)	L. Davis, CWI	06/09/2009
P1157A	CCP-SO-INL-08-001	CCP Standing Order for ARP VE - Guidance for Roaster Oxides (CCP-SO-INL-08-001)	D Ploetz	05/08/2008
P1158A	ID-SDA-Sludge	AMWTP Form-1900, AMWTP Offsite Waste Stream Profile for ID-SDA-Sludge, Inorganic and Organic Homogeneous Solids from the Subsurface Disposal Area (SD-704) (ID-SDA-Sludge)	Thomas H. Johnson, CH TRU STR, CWI	07/18/2011
P1159A	ID-SDA-Debris	AMWTP Form-1900, AMWTP Offsite Waste Stream Profile for ID-SDA-Debris, Heterogeneous Debris from the Subsurface Disposal Area (SD-705) (ID-SDA-Debris)	Thomas H. Johnson, CWI CH TRU STR	07/18/2011
P116A	N/A	Federal Facilities Compliance Agreement/Compliance Order Inventory Report. 1989.	from WASTREN library (Rockwell International)	11/1/1989
P1160A	ID-SDA-SOIL	AMWTP Form-1900, AMWTP Offsite Waste Stream Profile for ID-SDA-SOIL, SDA Soil from the Subsurface Disposal Area (SD-706) (ID-SDA-SOIL)	Thomas H Johnson, SWI CH TRU STR	07/18/2011
P1161A	IW-LAB-S5490-221F	AMWTP Form-1900, AMWTP Offsite Waste Stream Profile for IW-LAB-S5490-221F, RWMC Laboratory U151 Heterogeneous Debris (IW-525) (IW-LAB-S5490-221F)	Sylvia Sing, WTS	01/12/2011

Implementing Document: MP-TRUW-8.13

TRACKING NUMBER	DOCUMENT NUMBER	DOCUMENT TITLE/DESCRIPTION	DOCUMENT AUTHOR	DOCUMENT DATE
P1162A	IW-LAB-PCB-S5490	AMWTP Form-1687, Non-AMWTP Generator Waste Profile for IW-LAB-PCB-S5490, Laboratory PCB Debris (IW-526) (IW-LAB-PCB-S5490)	Sylvia Sing, WTS	02/08/2010
P1163A	IW-LAB-S5490	AMWTP Form-1687, Non-AMWTP Generator Waste Profile for IW-LAB-S5490, Laboratory Non-PCB Debris (IW-527) (IW-LAB-S5490)	Sylvia Sing, WTS	02/08/2010
P1164A	IW-LAB-S3900-221F	AMWTP Form-1900, AMWTP Offsite Waste Stream Profile for IW-LAB-S3900-221F, RWMC Laboratory U151 Homogeneous Solids (IW-602) (IW-LAB-S3900-221F)	Sylvia Sing, WTS	01/13/2011
P1165A	IW-LAB-S3900	AMWTP Form-1687, Non-AMWTP Generator Waste Profile for IW-LAB-S3900, Laboratory Homogeneous Solids (IW-603) (IW-LAB-S3900)	Sylvia Sing, WTS	02/08/2010
P1166A	CCP-AK-INL-018	Central Characterization Project Acceptable Knowledge Summary Report for Idaho National Laboratory, Lawrence Livermore National Laboratory Waste Streams: LL0-M001-S5400, LL-W019-S3900, LL-T004-S3141 (CCP-AK-INL-018)	Larry Porter	05/26/2011
P1167A	CCP-AK-INL-019	Central Characterization Project Acceptable Knowledge Summary Report for Idaho National Laboratory, General Electric Vallecitos Nuclear Center Hot Cell Debris Waste, Waste Stream: ID-GEVNC-02 (CCP-AK-INL-019)	Larry Porter	07/15/2010
P1168A	CCP-AK-INL-020	Central Characterization Project Acceptable Knowledge Summary Report for Lovelace Respiratory Research Institute Contact-Handled Transuranic Waste Stored at Sandia National Laboratories/New Mexico Shipped to Advanced Mixed Waste Treatment Project, Waste Stream: ID-SDA-T001 (CCP-AK-INL-020)	Larry Porter	05/16/2011
P1169A	CCP-AK-INL-021	Central Characterization Project Acceptable Knowledge Summary Report for Idaho National Laboratory, Sandia National Laboratories/New Mexico Hot Cell Facility Contact Handled Transuranic Waste (Debris), Waste Stream: ID-SNL-HCF-S5400 (CCP-AK-INL-021)	Larry Porter	05/12/2011
P117A	CO-1039-D	Sorting and Scarfing Firebrick (Line 48) (CO-1039-D)	Rocky Flats Plant	9/24/1988
P1170S		Material Safety Data Sheets for various Texaco oils and Shell Vitrea M oil ()	Texaco and Shell oil companies	
P1171A	PNNL-220-0001-00, -01, -02, -03	Waste Profiles for 300 Area PNNL Facilities (PNNL-220-0001-00, -01, -02, -03)	Hanford Waste Services Organization	Multiple
P1172A	PNNL-230-0002-03	Waste Profile for 300 Area PNNL Facilities (PNNL-230-0002-03)	Waste Services Organization	07/12/2006

Implementing Document: MP-TRUW-8.13

TRACKING NUMBER	DOCUMENT NUMBER	DOCUMENT TITLE/DESCRIPTION	DOCUMENT AUTHOR	DOCUMENT DATE
P1173A	PNNL-240-0001-03	Waste Profile Sheet (PNNL-240-0001-03)	K. McDowell	06/28/2006
P1174A	RLM325D	Acceptable Knowledge Reevaluation Checklist RLM325D (RLM325D)	M. Conilogue	11/01/2006
P1175A	N/A	Backlog Waste Reassessment Baseline Books for Waste Forms 19 and 47	EG&G Rocky Flats, Inc.	01/04/1995
P1176A	RPL-OP-001	Routine Research Operations (RPL-OP-001)	G. J. Lumetta	03/01/2000
P1177A	APEL-PIP-5	Polishing of Ceramic Pellets and Glasses Using the MINIMET Polisher/Grinder (APEL-PIP-5)	R. D. Scheele	01/19/2000
P1178A	APEL-PIP-6	Profiling Ovens and Furnaces (APEL-PIP-6)	W. C. Buchmiller	06/01/2000
P1179A	PNL-10743 AD-940	1995 Baseline Solid Waste Management System Description (PNL-10743 AD -940)	G. S. Anderson, et.al	09/01/1995
P118A	N/A	Material Safety Data Sheet for Supertemp 1900/Ramcote 1200.	Ramco Insulation, Inc., Richard A. Moss / Copy obtained from Chris Peppler, RMRS, Building T130C.	1/1/1991
P1180A	CSS 325-1	Temporary Variance 00-1 (CSS 325-1)	M. W. Urie	01/05/2000
P1181A	HNF-2599	Hanford Site Transuranic Waste Quality Assurance Project Plan (HNF-2599)	Fluor Hanford	09/22/2005
P1182A	DOE/CAO-95-1121	Transuranic Waste Baseline Inventory Report (DOE/CAO-95-1121)	N/A	12/01/1995
P1183A	DOE M 435.1-1; DOE O 435.1	DOE M 435.1 and DOE O 435.1, Radioactive Waste Management Document (DOE M 435.1-1; DOE O 435.1)	Office of Environmental Management	07/09/1999
P1184S	N/A	Nuclear Waste Policy Act	U. S. Department of Energy	01/01/2002
P1185A	DOE/WIPP-DRAFT-3004	Transuranic Waste Baseline Inventory Report-2004 (DOE/WIPP-DRAFT-3004)	N/A	N/A
P1186A	RHO-MA-222	Hanford Radioactive Solid Waste Packaging, Storage, and Disposal Requirements, Appendix D (RHO-MA-222)	D. P. Belgrair	06/01/1985
P1187A	PNL-MA-8	Waste Management & Environmental Compliance (PNL-MA-8)	J. M. Hobbs	08/01/1988
P1188A	WH-3-2583	The Elimination of Hydrogen Peroxide from Solutions Remaining After Isolation of Plutonium as Plutonium IV Peroxide (WH-3-2583)	W. O. Simon, et al.	06/04/1945

Implementing Document: MP-TRUW-8.13

TRACKING NUMBER	DOCUMENT NUMBER	DOCUMENT TITLE/DESCRIPTION	DOCUMENT AUTHOR	DOCUMENT DATE
P1189A	Conf-791234	New Decontamination Technologies for Environmental Applications (Conf-791234)	M. W. McCoy, H. W. Arrowsmith, and R. P. Allen	02/01/1981
P119A	N/A	Material Safety Data Sheet for Metex Chemicals. McDermid Incorporated. 1985-1986.	MacDermid Incorporated - Prepared by Cherrie Gillis; Copies obtained from Rocky Flats MSDS binders in Building T130C.	1985 / 198
P1190A	www.wise-uranium.org/rup.html	Uranium Radiation Properties (www.wise-uranium.org/rup.html)	World Information Service on Energy	04/08/2005
P1191S	DOE/LLW-217	DOE Waste Treatability Group Guidance (DOE/LLW-217)	T. D. Kirkpatrick	01/01/1995
P1192A	BHI-01750	Data Quality Objectives Summary Report for D&D Waste Characterization of the 300 Area Building (BHI-01750)	R. A. Thoren	11/24/2004
P1193S	N/A	Hanford Engineer Works Laboratory Manual 231 Methods Section	N/A	12/01/1945
P1194S	RHO-CD-278	The Alleged 231-Z Discharge of Plutonium to the 216-Z-19 Ditch February 1977 (RHO-CD-278)	R. E. Wheeler	03/15/1978
P1195S	HNF-SD-CP-PECR-001	231-Z Building Pre-Existing Conditions Report (HNF-SD-CP-PECR-001)	D. L. Wiegand	03/27/1997
P1196A	HNF-9767	231-Z Non-Destructive Assay Plan (HNF-9767)	J. E. Ham	02/19/2002
P1197A	PROC-0601980	Guidelines for Decontamination of Facilities and Equipment Prior to Release for Unrestricted Use or Termination of Licenses for Byproduct, Source, or Special Nuclear Material (PROC-0601980)	N/A	06/01/1980
P1198A	WHC-SA-2772-FP	A History of Solid Waste Packaging at the Hanford Site (WHC-SA-2772-FP)	D. R. Duncan, et. al.	02/01/1995
P1199A	N/A	Data Quality Objectives for the Disposition of Sand, Slag and Crucible Materials Stored at the Plutonium Finishing Plant	N/A	04/24/2003
P120A	RFP-1354	Flammability of Leaded Dry-Box Gloves. The Down Chemical Company document RFP-1354 (RFP-1354)	The Dow Chemical Company	6/9/1969
P1200A	HNF-SD-CP-OCD-042	Basis Document Special Nuclear Material Storage (HNF-SD-CP-OCD-042)	E. P. Bonadie, et.al.	05/10/1999
P1201A	HNF-13971	Plutonium Finishing Plant Residual Chemical Hazards Assessment Data (HNF-13971)	A. M. Hopkins	12/01/2002

Implementing Document: MP-TRUW-8.13

TRACKING NUMBER	DOCUMENT NUMBER	DOCUMENT TITLE/DESCRIPTION	DOCUMENT AUTHOR	DOCUMENT DATE
P1202A	PFO-Z-200-001	Plutonium Finish Plant Process Flow Document k- Sand, Slag, and Crucible Cementation Process Flow Document (PFO-Z-200-001)	A. M. Stubbs	N/A
P1203A	CPS-Z-165-80350	Criticality Prevention Specification: Plutonium Finishing Plant/Plutonium Metal Production (CPS-Z-165-80350)	N/A	01/09/1990
P1204A	DOE-0254	Plutonium Finishing Plant Historical Facts (DOE-0254)	U. S. DOE	04/01/1996
P1205A	N/A	216-Z-9 Crib At The Plutonium Finishing Plant	D. Lini, J. Teal	02/27/2004
P1206A	ARH-R-215	Decommissioning of Division of Military Application Equipment at Richland Operations Office: Quarterly Report (ARH-R-215)	Atlantic Richfield Hanford	09/03/1975
P1207A	ARH-R-215	Decommissioning of Division of Military Application Equipment at Richland Operations Office: Quarterly Report (ARH-R-215)	Atlantic Richfield Hanford	01/19/1976
P1208A	ARH-R-215	Decommissioning of Division of Military Application Equipment at Richland Operations Office: Quarterly Report (ARH-R-215)	Atlantic Richfield Hanford	04/22/1976
P1209A	CPS-Z-165-80717	MT Transfer Glovebox (CPS-Z-165-80717)	PFP	09/24/1990
P121A	N/A	Waste Characterization Report Heavy Metals. Item Description Code 320. WASTREN, Inc. April 30, 1993	WASTREN	8/31/1993
P1210A	CPS-Z-165-83060	Alkaline Hydrolysis in Glovebox 60 (CPS-Z-165-83060)	PFP	07/31/1991
P1211A	CPS-Z-165-80709	Access Glovebox: 2nd Floor East (CPS-Z-165-80709)	Plutonium Finishing Plant	08/08/1989
P1212A	CPS-Z-165-80708	Access Glovebox: 1st Floor West (CPS-Z-165-80708)	Plutonium Finishing Plant	03/30/1994
P1213A	CPS-Z-165-80707	Access Glovebox: 1st Floor East (CPS-Z-165-80707)	Plutonium Finishing Plant	09/25/1989
P1214A	CPS-Z-165-80290	Sorting Glove box (CPS-Z-165-80290)	Plutonium Finishing Plant	09/12/1983
P1215A	ZO-170-823	Dismantle HEPA Filters (ZO-170-823)	Plutonium Finishing Plant	07/07/1994
P1216A	ZO-170-040	Repackage 55-Gallon Waste Drums (ZO-170-040)	Plutonium FInishing Plant	04/03/1989
P1217A	ZO-170-0299	Seal Out (ZO-170-0299)	G. Barr, et.al	08/20/1998
P1218A	ZL-100-326	PFP Analytical Laboratory Organic Waste Loadout (ZL-100-326)	N/A	01/14/1998
P1219A	HW-23487	The Isotopic Content and Specific Activity of Pile Produced Plutonium (HW-23487)	G. J. Alkire, H. R. Schmidt, E. M. Kinderman	02/25/1952

Implementing Document: MP-TRUW-8.13

TRACKING NUMBER	DOCUMENT NUMBER	DOCUMENT TITLE/DESCRIPTION	DOCUMENT AUTHOR	DOCUMENT DATE
P122A	RFP-4148	Document title unknown. Exhibit 1 excerpt from RFP-4148. (RFP-4148)	Obtained from WASTREN files.	
P1220A	UNI-1983	Spent Fuel Isotopic Inventory counted by Fuel Elements (UNI-1983)	W. D. Wittekind, R. L. Richardson	02/22/1982
P1221A	ARH-1164 RD	26% Pu-240 Production Data (ARH-1164 RD)	F. C. Black, et.al.	02/27/1969
P1222A	SD-HS-SAR-011	Plutonium Finishing Plant Laboratory Safety Analysis Report (SD-HS-SAR-011)	G. L. Jones	03/01/1984
P1223A	CCP-TP-083	CCP Gas Generation Testing (CCP-TP-083)	D. K. Ploetz	03/27/2009
P1224A	LA-MIN04-S.001	AMWTP Form-1900, AMWTP Offsite Waste Stream Profile for LA-MIN04-S.001, Los Alamos Salt Waste from TA-55 (LA-005) (LA-MIN04-S.001)	Mark Doherty, CCP AKE	05/02/2011
P1225A	HNF-22064	Plutonium Finishing Plant Operations Overview (1949-2004): Contamination Events and Plutonium Isotope Distributions of Legacy Holdup Material in Process Systems (HNF-22064)	R.C. Hoyt and J.A. Teal	8/0/2004
P1226A	FSP-PFP-IP-003	Radiological History of the Plutonium Finishing Plant (1954-1997) (FSP-PFP-IP-003)	A. L. Ehlert	04/01/1999
P1227A	WHC-88-245	FY 1988 Remote Mechanical C Line Campaign Blend Plan (WHC-88-245)	J.F. Durnil, E.V. Weiss	06/24/1988
P1228A	DO-100-039	T-Plant Operating Procedure Package Transuranic Waste (DO-100-039)	C. Martin	07/05/2005
P1229A	RHO-SS-SR-183-85-1	Remote Mechanical C (RMC) Line Material Balance and Laid Summary - June 27,1985 to December 11, 1985 (RHO-SS-SR-183-85-1)		01/30/1986
P123A	N/A	Packaging Rocky Flats Waste. Radioactive Waste. Article excerpted from Nuclear Technology, Volume 32. Charles E. Wickland. May 17, 1976.	from WASTREN files; Charles E. Wickland	5/17/1976
P1230A	ZL-100-326	Organic Waste Loadout (ZL-100-326)	J. M. Hieb	04/12/1996
P1231A	FDH-9855079R1	Tank 241-Z-361 Waste Characterization Data Quality Objective: Headspace and Tank Structure (FDH-9855079R1)	L. J. Olguin, A. M. Hopkins, D. L. Banning	N/A
P1232A	N/A	Recent Site-Wide Transport Modeling Related to the Carbon Tetrachloride Plume at the Hanford Site	M. P. Bergeron, C. R. Cole	09/01/2004
P1233A	ZL-191-322	Chemical and Radioactive Material Spill Clean Up (ZL-191-322)	Plutonium Finishing Plant	05/04/1998

Implementing Document: MP-TRUW-8.13

TRACKING NUMBER	DOCUMENT NUMBER	DOCUMENT TITLE/DESCRIPTION	DOCUMENT AUTHOR	DOCUMENT DATE
P1234A	ZP-100-001	Seal Out-PPSL Glove boxes (ZP-100-001)	WS Lewis	01/18/2000
P1235A	N/A	RCRA/SUPERFUND/OUST Hotline Monthly Report Question October 1992	N/A	10/01/1992
P1236A	N/A	RCRA/SUPERFUND Hotline Question and Answers	N/A	05/01/1991
P1237A	FSP-PFP-5-8	Nuclear Material Control-Physical Inventory (FSP-PFP-5-8)	N/A	05/19/1988
P1238A	ZL-090-304	Receiving, Handling, and Disposal of Routine Laboratory Samples (ZL-090-304)	N/A	02/20/1998
P1239A	HNF-1692	Tank 241-Z-361, Cores 263 and 264 Analytical Results for the Final Report (HNF-1692)	R. A. Esch	05/01/2000
P124A	CRDL-950351-009.	A Survey of the Rocky Flats Division Waste Streams (CRDL-950351-009.)	C. E. Plock	6/30/1972
P1240A	ZL-161-302	Seal in and Seal Out of Material from Glove box by Plastic bag or Sphincter (ZL-161-302)	N/A	12/11/1998
P1241A	n/a	Final Report for the Hydraulic Oil Samples Received from PFP, 234.5Z HA-23S, October 2007 (n/a)	G. P. Ritenour	11/29/2007
P1242A	WHC-EP-0845	Solid Waste Management History of the Hanford Site (WHC-EP-0845)	D. R. Duncan	03/01/95
P1243A	PNL-10507	Interim Plutonium Stabilization Engineering Study (PNL-10507)	PJ Sevigny,et.al.	08/01/1995
P1244A	DOE/WIPP-069	Waste Acceptance Criteria for the Waste Isolation Pilot Plant (DOE/WIPP-069)	N/A	04/01/1996
P1245A	WHC-SD-CP-TI-190	Technical Basis for Characterization of Plutonium for PFP (WHC-SD-CP-TI-190)	R.D. Crowe, R.W. Szempruch	02/01/1994
P1246A	N/A	Listing Background Document	Environmental Protection Agency	N/A
P1247A	DOE/WIPP-02-3122	Contact-Handled Transuranic Waste Acceptance Criteria For The Waste Isolation Pilot Plant (DOE/WIPP-02-3122)	N/A	03/01/2004
P1248A	LA-UR-96-3860	Hanford Tank Chemical and Radionuclide Inventories: HDW Model (LA-UR-96-3860)	S. Agnew	01/01/1997
P1249A	N/A	Dangerous Waste Regulations, Chapter 173-303 Washington Administrative Code (WAC)	Washington State Department of Ecology	11/01/1995

Implementing Document: MP-TRUW-8.13

TRACKING NUMBER	DOCUMENT NUMBER	DOCUMENT TITLE/DESCRIPTION	DOCUMENT AUTHOR	DOCUMENT DATE
P125A	N/A	Waste Stream Residue Identification and Characterization Sampling and Analysis Database.	from WASTREN files	10/1/1994
P1250A	M4T00-DCD-02-159	Transmittal of the Waste Stream-Specific Documents (HNF-5482, Draft Rev 8, HNF-5481,Draft Rev 15 and HNF-6489, Draft Rev 12) for the Acceptable Knowledge Documentation Management Program for PFP Non-Mixed and Mixed Debris Waste (M4T00-DCD-02-159)	S.W. Bisping	06/17/2004
P1251A	HW-53433	Isotopic Composition and Specific Activity of Chalk River Plutonium (HW-53433)	F. P. Brauer	10/23/1957
P1252A	WHC-SD-WM-RPT-056	Solid Waste Stream Hazardous and Dangerous Components Study (WHC-SD-WM-RPT-056)	W. W. Olson	08/01/1992
P1253A	N/A	Medical Effects of Internal Contamination with Uranium	A. Durakovae	03/01/1999
P1254A	HNF-3273	Hanford Defined Waste Model Limitations & Improvements (HNF-3273)	R. W. Harmsen, R. A. Watrous, J. W. Cammann, M. J. Kupfer, S. L. Lambert	12/01/1998
P1255A	N/A	Criticality Safety	N/A	04/03/1998
P1256A	PFD-Z-190-00002	Process Flowsheet Document, Remote Mechanical C (RMC) Line, Plutonium Finishing Plant (PFD-Z-190-00002)	G.T. Tassotti	11/16/1987
P1257A	RHO-MA-246	Plutonium Reclamation Facility Engineering Training Manual (RHO-MA-246)	J. D. Ludowise	09/01/1980
P1258A	PFD-Z-180-00003	Hydrolysis and Dissolution Flowsheet (PFD-Z-180-00003)	M. A. McNamar	12/16/1991
P126A	N/A	Waste Stream and Residue Identification and Characterization Building Valve Vaults. Version 3.2.	WASTREN files	9/1/1993
P1260A	INTC-S5-001	AMWTP Form-1687, Non-AMWTP Generator Waste Profile for INTC-S5-001, INTEC Waste Drum INTC050203 (BN-526) (INTC-S5-001)	Elizabeth C. Thiel	01/09/2008
P1261A	INTC-S3-001	AMWTP Form-1687, Non-AMWTP Generator Waste Profile for INTC-S3-001, INTEC Waste Drum INTC0500032 (BN-603) (INTC-S3-001)	Elizabeth C. Thiel	01/21/2008
P1262A	HAN-73214-BK12	Memoranda for the File: S Department, Hanford Engineer Works (Book 12) (HAN-73214-BK12)	E. I. DuPont De Nemours & Co., Inc.	1944-1946
P1263A	N/A	Plan for Handling Newly Generated Contact-Handled Transuranic Solid Waste at Pacific Northwest Laboratory (PNL)	D. J. Sommer	05/01/1986

Implementing Document: MP-TRUW-8.13

TRACKING NUMBER	DOCUMENT NUMBER	DOCUMENT TITLE/DESCRIPTION	DOCUMENT AUTHOR	DOCUMENT DATE
P1264A	DOE/WIPP-02-3122	Contact-Handled Transuranic Waste Acceptance Criteria for the Waste Isolation Pilot Plant (DOE/WIPP-02-3122)	Carlsbad Field Office Manager	11/15/2004
P1265A	WHC-EP-0225	Contact Handled Transuranic Waste Characterization Based on Existing Records (WHC-EP-0225)	B. C. Anderson, et. al.	02/01/1990
P1266A	ZO-170-301	Plutonium Finishing Plant Standard Practices, Seal In (ZO-170-301)	N/A	06/21/1994
P1267A	OSD-Z-184-00020	Contact Handled TRU Solid Waste Disposal (OSD-Z-184-00020)	Plutonium Finishing Plant Administration	05/10/1995
P1268A	N/A	Hawley's Condensed Chemicals	R. Lewis	1993
P1269A	SD-WM-TI-202	Waste Isolation Pilot Plant (WIPP) Certification Information Manual (SD-WM-TI-202)	L.D. Schwartz	01/28/1988
P127A		INEL SWEPP Track Accessible Database. 1996	Obtained from Don Kudera at INEL.	1996
P1270A	HNF-SD-CP-HA-001	Plutonium Finishing Plant Chemical Hazard Assessment (HNF-SD-CP-HA-001)	G. R. Wittman, et. al.	08/01/1997
P1271A	DOE/RL-2005-14	Removal Action Work Plan for PFP Above-Grade Structures: Facility Deactivation (DOE/RL-2005-14)	S. E. Killoy	04/01/2005
P1272A	M2E00-03-027	Percentage of Mixed Plutonium-Uranium Oxide (MOX) Containing >10 and <30 Weight Percent Plutonium (M2E00-03-027)	D. Lini	07/11/1993
P1273A	ZA-211-331	Determination of Nitric Acid with Hydroxide using Colorimetric Endpoint (ZA-211-331)	S.T. Hurlbut	12/05/1995
P1274A	ZA-211-305	Caustic Demand of PFP Waste Solutions by Titration to Indicator Endpoint (ZA-211-305)	W. H. Sant	12/05/1995
P1275A	HNF-1989	Tank 241-Z-361 Process and Characterization History (HNF-1989)	S. A. Jones	07/30/1998
P1276A	N/A	Waste Information Data System General Summary Report (For Site Code: (216-Z-12 Crib))	N/A	07/21/2005
P1277A	WMP-34483	Acceptable Knowledge Evaluation and Summary Report for Mixed Transuranic Waste 218-W-4B, Trench 7, Module 2 (WMP-34483)	P. H. Wicks	08/01/2007
P1278A	WHC-IP-0791	Historical Report on the Retrievably Stored Division of Military Application Equipment at the Hanford Site (WHC-IP-0791)	J. A. Demiter, et.al.	12/11/1991

Implementing Document: MP-TRUW-8.13

TRACKING NUMBER	DOCUMENT NUMBER	DOCUMENT TITLE/DESCRIPTION	DOCUMENT AUTHOR	DOCUMENT DATE
P1279S	HNF-40187	Hazard Evaluation for Use of Aspigel 100TM at PFP (HNF-40187)	D. M. Carson	01/01/2009
P128A	N/A	Material Safety Data Sheet for Mariko. Huntington Laboratories, Inc. September 11, 1986.	Obtained from WASTREN files.	9/11/1996
P1280A	PNNL-15410	Thermal Stability Studies of Candidate Decontamination Agents for Hanford's PFP Plutonium Contaminated Gloveboxes (PNNL-15410)	R. D. Scheele	09/01/2005
P1281A	RHO-CD-982	A-Button Line Terminal Process Clean Out (RHO-CD-982)	J. F. Durnil, J. D. Ludowise	unk
P1282A	N/A	Demonstration of RADPRO Decontamination Process	Environmental Alternatives, Inc.	08/01/2003
P1283A	AR-779	Plutonium Processing Manual (AR-779)	D. L. Uebelacker	12/01/1975
P1284A	DOE/RL-2003-43	Radioactive Air Emissions Notice of Construction for Deactivation for PFP, 200 West Area, Hanford Site, Richland, Washington (DOE/RL-2003-43)	N/A	02/01/2004
P1285A	ZDD-1-002	RADPRO Chemical Decontamination of Equipment/Gloveboxes Containing Plutonium (ZDD-1-002)	M.D. Talbot	N/A
P1286A	HNF-29564	Plutonium Finishing Plant 2006 Layup Plan (HNF-29564)	S. A. Chistensen	04/01/2006
P1287A	MSDS #061847	MSDS - Sellars Bonded Rolls and Pads (MSDS #061847)	Sellars Wipers & Sorbents	03/15/1996
P1288A	MSDS # 057454	MSDS - UPR (MSDS # 057454)	Sorbent Products Company	02/23/2007
P1289A	CCP-PK-NRD-001	Central Characterization Project Process Knowledge Summary Report For NRD Mixed Heterogeneous Debris Waste Stream: NRD.1 (CCP-PK-NRD-001)	Larry Porter, CCP	02/08/2011
P129A		Material Safety Data Sheet for OX-Out 536. ChemClean Corporation. May 5, 1986.	Obtained from WASTREN files; Obtained from Rocky Flats(R1)	5/5/1986
P1290A	CCP-PK-LBNL-001	Central Characterization Project Process Knowledge Summary Report For ERNEST ORLANDO LAWRENCE BERKELEY NATIONAL LABORATORY CONTACT-HANDLED TRU WASTE Waste Stream: LBNL-S5400 (CCP-PK-LBNL-001)	Larry Porter, CCP	03/30/2011
P1291S	MSDS-016	MSDS Allstar Crystal Glass Cleaner (U14825) (MSDS-016)	Unisource Worldwide, Inc.	01/17/2002
P1292S	MSDS-157	MSDS Orange Glo - Multi Purpose Cleaner (MSDS-157)	MF Distributions, Inc.	07/30/2004
P1293S	MSDS-020	MSDS: WD-40 Aerosol (MSDS-020)	WD-40 Company	08/05/2009

Implementing Document: MP-TRUW-8.13

TRACKING NUMBER	DOCUMENT NUMBER	DOCUMENT TITLE/DESCRIPTION	DOCUMENT AUTHOR	DOCUMENT DATE
P1294S	MSDS-432	MSDS Acetone (MSDS-432)	Science Lab.com, Inc.	11/06/2008
P1295S	MSDS-228	MSDS: ReACT General Decontamination Agent: Low Foam Formula Low Foam Formula Concentrate (MSDS-228)	Uni-Chem Chemicals, Inc.	
P1296S	MSDS-209	MSDS 3M Hi-Strength Spray Adhesive 90 (aerosol) (MSDS-209)	3M Company	04/07/2009
P1297S	MSDS-023	MSDS: Alconox (MSDS-023)	Alconox, Inc.	04/20/2009
P1298S	MSDS-004	MSDS Simple Green All-Purpose Clean and Simple Green Scrubbing Pad (MSDS-004)	Sunshine Makers, Inc.	05/01/2009
P1299S	MSDS-988	MSDS: "Soil Sement" (MSDS-988)	Midwest Industrial Supply	06/30/2006
P130A	N/A	TRIM SOL Material Safety Data Sheet.	Master Chemical Corporation.	2/27/1992
P1300S	MSDS-971	MSDS: DECON Gel 1101 (MSDS-971)	Cellular Bioengineering, Ind.	04/09/2007
P1301S	MSDS-281	MSDS: Stripcoat TLCL Free (MSDS-281)	Sanchem, Inc.	10/01/2003
P1302S	MSDS-779	MSDS: Clorox Disinfecting Wipes (MSDS-779)	The Clorox Company	09/01/1999
P1303S	MSDS-730	MSDS: Orange Hand Cleaner Pumice Lotion (MSDS-730)	Henkel Loctite Corporation	01/07/2003
P1304S	N/A	MSDS: ABC Asbestos Binding Compound	Fiberlock Technologies, Inc.	03/10/2009
P1305S	N/A	MSDS: Faultless Professional Spray Starch	Faultless Starch / Bon Ami Co.	02/15/2007
P1306S	N/A	MSDS: Faultless White Boxed Starch	Faultless Starch / Bon Ami Co.	10/19/2004
P1307S	N/A	MSDS: Magic Spray Starch	Faultless Starch / Bon Ami Co.	02/15/2007
P1308S	N/A	MSDS: Faultless Industrial Laundry Starch	Faultless Starch / Bon Ami Co.	10/13/2004
P1309S	MSDS-464	MSDS - Hexane (MSDS-464)	Fisher Scientific	10/26/2009
P131A	PB94-963603. OSWER 9938.4-03.	Waste Analysis at Facilities that Generate, Treat, Store, and Dispose of Hazardous Wastes. A Guidance Manual. (PB94-963603. OSWER 9938.4-03.)	U.S. EPA	4/1/1994
P1310S	MSDS-861	MSDS - Exeter (MSDS-861)	Sunrise Environmental Scientific	03/15/2001

Implementing Document: MP-TRUW-8.13

TRACKING NUMBER	DOCUMENT NUMBER	DOCUMENT TITLE/DESCRIPTION	DOCUMENT AUTHOR	DOCUMENT DATE
P1312A	NRD.1	AMWTP Form-1900, AMWTP Offsite Waste Stream Profile for NRD.1, Nuclear Radiation Development Mixed Heterogeneous Debris (ND-228) (NRD.1)	Mark Doherty, CCP AKE	05/31/2011
P1313A	LBNL-S5400	AMWTP Form-1900, AMWTP Offsite Waste Stream Profile for LBNL-S5400, Lawrence Berkeley Mixed Heterogeneous Debris (LB-229) (LBNL-S5400)	Mark Doherty, CCP AKE	05/19/2011
P1314A	SR-MD-SOIL	AMWTP Form-1900, AMWTP Offsite Waste Stream Profile for SR-MD-SOIL, Mound Site Soil/Debris Stored at SRS (SR-842) (SR-MD-SOIL)	Craig Simmons	05/19/2011
P1315A	EDF-8723	Allowable Nitrate Salt Concentration in ARP Waste (EDF-8723)	R.R. Kimmett	06/30/2010
P1316S	MSDS-067	MSDS: Quaker Chemical Quintolubric 822-300 (MSDS-067)	Quaker Chemical Corp.	N/A
P1317S		Material Safety Data Sheets: Aldrich Chemical Co. benzene; Marmon brass; Eutecrod 157B; Castle Metals bronze; Cadmium compounds; Silver Solder, Brazing filler metal; Dynaloy silver filled epoxy resin; Metpolish; Micropolishi; Tin Lead Solder Solution; Turco Brass Dip; Turco Decon 4502; Turco-Solv; Skyblue SB-B, SB-G, SB-D; Kodak Photo-Glo 200 Solution; Crystalbond Mounting Wax; Krylon Spray; REACT #172; Dash Pot Oil; Koroseal; Octoil; Hyprez Os Lubricant; Permatex; Zeolite; Phenolic Powder; Bajekute Preforms;Diallyl Phthalate Powder ()	Multiple Manufacturers	1985-2001
P1318S	N/A	Argonne National Laboratory Liquid Waste Dispoal Record: 1 pint poly bottle of Pu contaminated hydrofluoric acid.	R. H. Bradley	11/01/1976
P1319A	IPS-2-00-00	AGHCF Operations Manual Section 11.0 Waste Management (IPS-2-00-00)	ANL-East	09/16/1996
P132A	R-6078.	Predecisional Draft Transuranic Waste Characterization Acceptable Knowledge Guidance Document (R-6078.)	U.S. DOE	8/1/1995
P1320A	M4000-00250-SA-01	Safety Analysis Report for the Alpha-Gamma Hot Cell Facility (Bldg. 212) Materials Science and Technology Division Argonne National Laboratory (M4000-00250-SA-01)	W. D. Jackson	12/13/2019
P1321A	N/A	Safety Analysis for Twenty Year Retrievable Storage of Intermediate Gamma Level Transuranic Waste	W. D. Jackson	06/01/1976
P1322A	J0306-0033-SA	TRU-RH Waste Certification Plan for Waste Management Operations (J0306-0033-SA)	Ralph W. Ditch	06/09/1988
P1323A	N/A	Presentation to DOE Office of Nuclear Safety re AGHCF	N/A	07/19/1993

Implementing Document: MP-TRUW-8.13

TRACKING NUMBER	DOCUMENT NUMBER	DOCUMENT TITLE/DESCRIPTION	DOCUMENT AUTHOR	DOCUMENT DATE
P1324A	M4000-004-SA-01	Engineering Test Plan for the Irradiation Testing of U3Si Dispersion Fuels. (M4000-004-SA-01)	R. F. Mattas	06/01/1980
P1325A	AGHCF-SORT	Procedure for Sorting Remote-Handled TRU Waste (30-Gallon Intermediate-Level Waste) (AGHCF-SORT)	Irradiation Performance Section	01/07/1987
P1326S	N/A	Waste Handling Procedures	C. L. Cheever	09/18/1986
P1327S	ANL-ms-912A	Examination Techniques for High Burnup U-Pu Fuel Elements for Fast Breeder Reactors (ANL-ms-912A)	B. J. Koprowski and F. L. Brown	06/30/1967
P1328S	RHO-RE-ST--31P	Review of Zirconium-Zircaloy Pyrophoricity (RHO-RE-ST--31P)	Thurman D. Cooper	11/01/2011
P1329A	IPS-2-00-01	AGHCF Operations Manual, Section 7.15 Preparation of Metallographic Specimens. (IPS-2-00-01)	ANL-East	03/29/1990
P133A	CAO-94-1012	Quality Assurance Program Description (CAO-94-1012)	US Department of Energy INEL Files – Glen R. Hayes	6/1/1994
P1330A	N/A	RCRA Part A Application for ANL-E	David T. Goldman and E. Gale Pewitt	12/16/1985
P1331A	ANL-87-2	Final Report for the Light Water Breeder Reactor Proof-of-Breeding Analytical Support Project (ANL-87-2)	D. G. Graczyk, J. C. Hoh, F. J. Martino, R. E. Nelson, John Osudar, and N. M. Levitz	05/01/1987
P1332S	N/A	New Brunswick Laboratory Safety Analysis Report	NBL	10/01/1990
P1333S	ANL-84-26	Chemical Technology Division Annual Technical Report 1983 (ANL-84-26)	L. Burris, P. A. Nelson, D. L. Barney, and M. J. Steindler	04/01/1984
P1334S	ANL-85-9	Chemical Technology Division Annual Technical Report 1984 (ANL-85-9)	M. J. Steindler, P. A. Nelson, and L. Burris	02/01/1985
P1335S	ANL-88-19	Chemical Technology Division Annual Technical Report 1987 (ANL-88-19)	ANL-E	05/01/1988
P1336S	NBL-SP-Pu-1	Dissolution of Plutonium-Containing Materials Using Acid Digestion (NBL-SP-Pu-1)	NBL	Unk
P1338S	ANL-87-19	Chemical Technology Division Annual Technical Report 1986 (ANL-87-19)	Chemical Technology Division	06/01/1987
P1339A	DOE/CAO-95-1121	Transuranic Waste Baseline Inventory Report (DOE/CAO-95-1121)	N/A	12/01/1995

TRACKING NUMBER	DOCUMENT NUMBER	DOCUMENT TITLE/DESCRIPTION	DOCUMENT AUTHOR	DOCUMENT DATE
P134A	DOE/WIPP 91-005.	Waste Isolation Pilot Plant RCRA Part B Permit Application. Appendix C9, TRU Waste Characterization Using Acceptable Knowledge (DOE/WIPP 91-005.)	U. S. DOE/WIPP	1/15/1996
P1340S		Frontiers Research Highlights 1946-1996 ()	Office of Public Affairs, Argonne National Laboratory	1996
P1341S	N/A	The Liquid Metal Fast Breeder Reactor: Promises and Uncertainties	Comptroller General of the United States	07/31/1975
P1342S		Light Metal Fast Breeder; Right Answer, Wrong Question ()	Adams Atomic Engines/Atomic Insights	10/01/1995
P1343S	N/A	Materials Science and Technology Division Annual Review - 1983	MST	08/01/0198
P1344S	n/a	Materials Science and Technology Division Annual Review - 1982 (n/a)	ANL-E	11/01/1982
P1345A	SOP: ACL-032	Determination of Uranium in Solids, Sediments, and Sludges (SOP: ACL-032)	Alice M. Essling, Donald G. Graczyk	01/30/1987
P1346A	SOP: ACL-031	Sample Preparation and Separation of Pu, Th, and Am from Solid (Soils, Sediments, Sweepings) and Liquid (Waters, Milk) Environmental Samples for Analysis by Alpha-Spectrometry (SOP: ACL-031)	L. B. Gillis, F. Markin, L. L. Wetter	03/25/1993
P1347A	SOP: ACL-130	Standard Operating Procedure: Sample Preparation by Total Dissolution and Separation of Thorium, Plutonium, and Americium from Solid Environmental Samples for Analysis by A1pha-Spectrometry (SOP: ACL-130)	Lesa L. Wetter	04/08/1988
P1348A	SOP: ACL-132	Standard Operating Procedure: Sample Preparation and Separation of Plutonium, Americium, Uranium, and Strontium from Air Filters (SOP: ACL-132)	Tony TenKate, Lesa L. Wetter	04/05/1988
P1349A	SOP: ACL-113	Standard Operating Procedure: Determination of Strontium in Environmental Water Samples (SOP: ACL-113)	Lesa L. Wetter	07/31/1987
P135A	R-6157 Draft	Guidance for Preparing Transuranic Waste Sampling Plans (Draft). (R-6157 Draft)	US Department of Energy	11/95
P1350A	SOP: ACL-117	Standard Operating Procedure: Determination of Strontium in Environmental Soils and Vegetations (SOP: ACL-117)	Lesa L. Wetter	07/31/1987
P1351A	WM-PD-90-003	Inventory Analysis of Stored Transuranic (TRU) Waste at the Radioactive Waste Management Complex (RWMC) (WM-PD-90-003)	K. P. Guay, INEL, EG&G	04/30/1990

Implementing Document: MP-TRUW-8.13

TRACKING NUMBER	DOCUMENT NUMBER	DOCUMENT TITLE/DESCRIPTION	DOCUMENT AUTHOR	DOCUMENT DATE
P1352A	SOP: ACL-124,	Standard Operating Procedure: Determination of Technetium-99 In Environmental Samples (SOP: ACL-124,)	Francis Markun,Lesa L. Wetter	10/23/1987
P1353A	M0001-0006-SP-01	Criticality Hazards Control Building 212, Wing D, Special Facility FD12, Materials Science Division (M0001-0006-SP-01)	A.G. Hins	02/22/1979
P1354A	CCP-AK-INL-022	Central Characterization Project Acceptable Knowledge Summary Report For Idaho National Laboratory, SANDIA NATIONAL LABORATORIES/NEW MEXICO TRU Radioactive Sources (Debris)Waste Streams:ID-SNL-SOURCES-S5400 (CCP-AK-INL-022)	Larry Porter	05/04/2011
P1355A	CCP-AK-INL-023	Central Characterization Project Acceptable Knowledge Summary Report For Idaho National Laboratory, NRD Mixed Heterogeneous Debris Waste Stream: ID-NRD.1 (CCP-AK-INL-023)	Larry Porter	07/18/2011
P1356A	CCP-AK-INL-024	Central Characterization Project Acceptable Knowledge Summary Report For Idaho National Laboratory, Ernest Orlando Lawrence Berkeley National Laboratory Contact-Handled TRU Waste Waste Stream: ID-LBNL-S5400 (CCP-AK-INL-024)	Larry Porter, CCP	06/27/2011
P1357A	AECHDM-PK	AMWTP Form-1900, AMWTP Offsite Waste Stream Profile for AECHDM-PK, Argonne CH Debris (AE-230); AMWTP Form-1906, Non -AMWTP Waste Profile Environmental Checklist for Profile ID AECHDM-PK; Email from Jeff Helms to Rand S. Watson, Re: form-1906 AECHDM-PK 7-07-2011.doc; AMWTP Form-1907 Non AMWTP Waste Profile Radiological Controls Checklist for Profile ID AECHDM-PK; Email from Roy K. Hansen to Rand S. Watson, Re: Form-1907 AECHDM PK.doc; AMWTP Form-1908, Non-AMWTP Waste Profile Acceptable Knowledge Checklist for Profile ID AECHDM-PK; AMWTP Form-1910, Non AMWTP Waste Profile Industrial Safety/ Industrial Hygiene (IS/IH) Checklist for Profile ID AECHDM-PK; Email from Robert B. Nash to Rand S. Watson, Re: Form-1910, AECHDM-PK.docx; AMWTP Form-2005, Offsite Waste Profile nuclear Safety Checklist for Profile ID AECHDM-PK; Email from Rod E. Arbon to Morris A. Hall, Rachelle Hubler, and Rand S. Watson, Re; Offsite waste approval (AECHDM-PK)	Mark Doherty	07/19/2011
P1358A	N/A	BN600 Waste Stream Profile package, AMWTP WMF-676 PCB contaminated Debris (BN600)	AMWTP	07/28/2011
P1359A	DOE/RL-2002-15	Removal Action Work Plan for the PFP Above-Grade Structures: Ancillary Facility Demolition (DOE/RL-2002-15)	none identified	none ident

Implementing Document: MP-TRUW-8.13

TRACKING NUMBER	DOCUMENT NUMBER	DOCUMENT TITLE/DESCRIPTION	DOCUMENT AUTHOR	DOCUMENT DATE
P136A	R-6157	Guidance for Preparing Transuranic Waste Sampling Plans. (R-6157)	US Department of Energy	2/1/1996
P1360A	HNF-13940	Plutonium Finishing Plant Residual Chemical Hazards Assessment Data (HNF-13940)	A.M. Hopkins	12/01/2002
P1361A	DOE/TRU-2006-3344	Transuranic Waste Baseline Inventory Report-2004 (DOE/TRU-2006-3344)	U.S. Department of Energy Carlsbad Field Office	2004
P1362S	WMP-400-7.1.9	Acceptable Knowledge Documentation Management (WMP-400-7.1.9)	N/A	04/13/2007
P1363A	Site Code: 216-Z-1&2	Waste Information Data System General Summary Report for 216-Z-1 and 216-Z-2 (Site Code: 216-Z-1&2)	Hanford	03/14/2007
P1364A	OS-ETSD-IO-005	Notification About a Change in the Type of Absorbent Used Under the Advanced Mixed Waste Treatment Project Risk-Based Disposal Approval (OS-ETSD-IO -005) (OS-ETSD-IO-005)	AMWTP	01/07/2010
P1365A	N/A	Risk-Based Disposal Approval request for PCBs contaminated with Radioisotopes at the AMWTP Facility	AMWTP	03/01/2007
P1366A	N/A	Contract No. DE-AC07-99ID13727, Request for Modification of the "Toxic Substance Control Act (TSCA) Risk-Based Disposal Approval (RBDA) Application for Management of Transuranic Polychlorinated Biphenyl (PCB) Remediation Waste at the Advanced Mixed Waste Treatment Project (AMWTP) Facility"-LSS-16-11	AMWTP	08/03/2011
P1367A	INEEL/EXT-98-01213	A Regulatory Analysis and Reassessment of U.S. Environmental Protection Agency Listed Hazardous Waste Numbers for Applicability to the INTEC Liquid Waste System (INEEL/EXT-98-01213)	kenneth L. Gilbert and Timothy E. Venneman	02/01/2011
P1368A	CCP-AK-SRS-6	CCP-AK-SRS-6,Central Characterization Project Acceptable Knowledge Summary Report For Savannah River Site Waste Streams: SR-W027-235F-HET, SR-W027-235F-HOM, and SR-W027-235F-HEPA (CCP-AK-SRS-6)	Larry Porter	09/16/2010
P1369S	RPT-TRUW-21	Evaluation of Characterization Data Associated with 74 AMWTP Containers of Rocky Flats First/Second Stage Sludge Waste (RPT-TRUW-21)	BNFL	08/01/2004
P137A	CAO-94-1010	Transuranic Waste Characterization Quality Assurance Program Plan. (CAO-94-1010)	US DOE, CAO	11/15/1996

Implementing Document: MP-TRUW-8.13

TRACKING NUMBER	DOCUMENT NUMBER	DOCUMENT TITLE/DESCRIPTION	DOCUMENT AUTHOR	DOCUMENT DATE
P1370S	RPT-TRUW-22	Evaluation of Characterization Data Associated with 29 AMWTP Containers of Rocky Flats Building 374 Sludge Waste (RPT-TRUW-22)	BNFL	08/01/2004
P1371S	RPT-TRUW-19	Population Determination for Waste Stream Profiles BNINW216 and BNINW218 (RPT-TRUW-19)	BNFL	07/30/2004
P1374A	DOE/TRU-11-3425	Annual Transuranic Waste Inventory Report - 2011 (Data Cutoff Date 12/31/10) (DOE/TRU-11-3425)	U.S. Department of Energy - Los Alamos National Laboratory - Carlsbad Field Office (LANL-CO) Waste Inventory Team	11/02/2011
P1376S	MSD-014	Material Safety Data Sheets for Universal PIG® Absorbents (MSD-014) New Pig Corp. (MSD-014)	PIG corporation.	10/10/2011
P1377S	MSD-016	Material Safety Data Sheets for Oil-Only PIG® Absorbents (MSD-016) New Pig Corp., (MSD-016)	PIG corporation	08/03/2011
P1378S	MSD-029	Material Safety Data Sheets for BLUE PIG® Sock Absorbents (MSD-029) New Pig Corp., (MSD-029)	PIG corporation	02/09/2011
P1379A	CCP-AK-INL-025	Central Characterization Project Acceptable Knowledge Summary Report For Idaho National Laboratory, Argonne Contact-Handled Transuranic Waste from Facility Maintenance and Laboratory Operations, Waste Streams: ID-AECHDM, ID-AECHHM (CCP-AK-INL-025)	Mike Ramirez	12/16/2011
P138A	DOE/WIPP-069, Revision 5, Draft D	Waste Acceptance Criteria for the Waste Isolation Pilot Plant. DOE/WIPP-069, Revision 5, Draft D (DOE/WIPP-069, Revision 5, Draft D)	US Dept. of Energy INEL files.	1/1/1996
P1380A	CCP-AK-ANLE-001	Central Characterization Project acceptable Knowledge Summary Report for Argonne National Laboratory – East Contact-Handled TRU Waste, Facility Maintenance and Laboratory Operations (CCP-AK-ANLE-001)	David H. Haar	12/31/2003
P1381A	CCP-AK-ANLE-500	CCP-AK-ANLE-500 Central Characterization Project Acceptable Knowledge Summary Report For Argonne Remote-Handled Debris Waste, Waste Stream: AERHDM (CCP-AK-ANLE-500)	CCP, Irene Quintana	12/21/2011
P1382A	ANL/D&D/TM-96/3	Decontamination and Decommissioning of 61 Plutonium Gloveboxes in D-Wing, Building 212, Argonne National Laboratory-East: Final Project Report (ANL/D&D/TM-96/3)	ANL-E (C.L. Cheever, R.W. Rose)	1996

Implementing Document: MP-TRUW-8.13

TRACKING NUMBER	DOCUMENT NUMBER	DOCUMENT TITLE/DESCRIPTION	DOCUMENT AUTHOR	DOCUMENT DATE
P1383S	ID-AECHHM	Waste Stream Profile Form, ID-AECHHM, Central Characterization Project, December 1, 2011. (ID-AECHHM)	CCP	12/01/2011
P1384S	AE-P-068	Various Material Safety Data Sheets (MSDS) for ANL-E (AE-P-068)	CCP	1980-1990
P1385S	Federal Register / Vol. 54, No. 223	ENVIRONMENTAL PROTECTION AGENCY, 40 CFR Part 300, [FRL 3681-4], National Priorities List for Uncontrolled Hazardous Waste Sites, Federal Register / Vol. 54, No. 223. (Federal Register / Vol. 54, No. 223)	Environmental Protection Agency	1989
P1386S	Administrative Docket Number:1088-06-120	Idaho National Engineering Laboratory ("INEL") Federal Facility Agreement and Consent Order (FFA/CO) (Administrative Docket Number:1088-06-120)	U.S. EPA	12/09/1991
P1387S	DOE/ID-11359	CERCLA Record of Decision for Radioactive Waste Management Complex Operable Unit 7-13/14 (DOE/ID-11359)	DOE,EPA and IDEQ	09/01/2008
P1388A	EDF-5307	EDF-5307, Chemical Compatibility and Inventory Evaluation for the Accelerated Retrieval Project and the Accelerated Retrieval Project II (EDF-5307)	ICP	08/09/2006
P1389A	INEL-95/0310 (Formerly EGG-WM-10903)	A Comprehensive Inventory of Radiological and Nonradiological Contaminants in Waste Buried in the Subsurface Disposal Area of the INEL RWMC During the Years 1952-1983, Volume 1, INEL (CERCLA) (INEL-95/0310 (Formerly EGG-WM-10903))	INEL, Lockheed Idaho Technologies Company	08/01/1995
P139A	14-RF-04701	Reactivity of Pyrochemical Salts at Rocky Flats Plant. 14-RF-04701. EG&G Rocky Flats, Inc. (14-RF-04701)	EG&G Rocky Flats, Inc.,Obtained from WASTREN files.	4/1/1994
P1390A	INEL-95/0310 (Formerly EGG-WM-10903)	A Comprehensive Inventory of Radiological and Nonradiological Contaminants in Waste Buried in the Subsurface Disposal Area of the INEL RWMC During the Years 1952-1983, Volume 2, INEL (CERCLA) (INEL-95/0310 (Formerly EGG-WM-10903))	INEL, Idaho Lockheed Idaho Technologies Company	08/01/1995
P1391A	INEL-95/0310 (Formerly EGG-WM-10903)	CERCLA - A Comprehensive Inventory of Radiological and Nonradiological Contaminants in Waste Buried in the Subsurface Disposal Area of the INEL RWMC During the Years 1952-1983, Volume 3, INEL (INEL-95/0310 (Formerly EGG-WM-10903))	INEL, Lockheed Idaho Technologies Company	08/01/1995

Implementing Document: MP-TRUW-8.13

TRACKING NUMBER	DOCUMENT NUMBER	DOCUMENT TITLE/DESCRIPTION	DOCUMENT AUTHOR	DOCUMENT DATE
P1392A	INEL-95/0310 (Formerly EGG-WM-10903)	CERCLA - A Comprehensive Inventory of Radiological and Nonradiological Contaminants in Waste Buried in the Subsurface Disposal Area of the INEL RWMC During the Years 1952-1983, Volume 4, INEL (INEL-95/0310 (Formerly EGG-WM-10903))	INEL, Lockheed Idaho Technologies Company	08/01/1995
P1393A	INEL-95/0310 (Formerly EGG-WM-10903)	CERCLA - A Comprehensive Inventory of Radiological and Nonradiological Contaminants in Waste Buried in the Subsurface Disposal Area of the INEL RWMC During the Years 1952-1983, Volume 5, INEL (INEL-95/0310 (Formerly EGG-WM-10903))	INEL, Lockheed Idaho Technologies Company	08/01/1995
P1394A	N/A	ENVIRONMENTAL STATEMENT; WASTE MANAGEMENT OPERATIONS; NATIONAL REACTOR TESTING STATION, IDAHO	United States Atomic Energy Commission	01/01/1974
P1395A	N/A	Facility Waste Descriptions; Argonne-West	N/A	12/14/1973
P1396S	N/A	RADIOACTIVE WASTE MANAGEMENT at the EBR-II SITE	Donald C. Hampson	04/17/1969
P1397S	ANL-7471	Final Safety Analysis Report On The Zero Power Plutonium Reactor (ZPPR) Facility (ANL-7471)	H. Lawroski, R. G. Palmer, F. W. Thalgott, R. N. Curran, and R. G. Matlock	06/01/1972
P1398S	560	MSDS, Hg Absorb ® (560)	Lab Safety Supply, Inc.	05/18/2020
P1399S	N/A	MSDS A660 (N)absorbent	NOCHAR, INC	none
P140A	TDR-94-011	Analytical Methods for Determining the Reactivity of Pyrochemical Salts. TDR -94-011. (TDR-94-011)	A. G. Phillips and J. L. Stakebake; Obtained from WASTREN files.	4/18/1994
P1400S	N/A	MSDS Spill X-A	ANSUL, Inc.	09/01/2009
P1401S	N/A	MSDS Spill X-C	ANSUL Inc.	09/01/2009
P1402S	N/A	MSDS Spill X-5 absorbent	ANSUL Inc.	09/01/2009
P1403S	EGG-WTD-9438	A BRIEF ANALYSIS AND DESCRIPTION OF TRANSURANIC WASTES IN THE SUBSURFACE DISPOSAL AREA OF THE RADIOACTIVE WASTE MANAGEMENT COMPLEX AT INEL (EGG-WTD-9438)	D. A. Arrenholz J. L. Knight	11/22/1991
P1404A	DOE 5820.1	Management of Transuranic Contaminated Material - DOE Order 5820.1 (DOE 5820.1)	Department of Energy	09/30/1982

Implementing Document: MP-TRUW-8.13

TRACKING NUMBER	DOCUMENT NUMBER	DOCUMENT TITLE/DESCRIPTION	DOCUMENT AUTHOR	DOCUMENT DATE
P1405A	INEL-95/0343	Work Plan for Operable Unit (OU) 7-13 & 7-14 Waste Area Group (WAG-7) Comprehensive Remedial Investigation Feasibility Study (RI/FS) - w/addendums (INEL-95/0343)	Bensen, T. A.	05/01/1996
P1406A	N/A	Guidance for the Movement of MIII Bin that May Contain Explosive Ordnance	Joseph C. Cook	06/25/2009
P1407S		PUBLIC LAW 102-386 "Federal Facility Compliance Act of 1992" ()	U.S. Congress	10/06/1992
P1409S	SR-W027-773A-HOM	AMWTP Form-1900, AMWTP Offsite Waste Stream Profile for SR-W027-773A-HOM, SRS Solidified Inorganics from 773A (SR-257) (SR-W027-773A-HOM)	Jim Vernon, CCP AKE	04/17/2012
P141A	RWMC-EDF-805; INEL-95/029	Matrix Parameter Category Groups (MPCG). RWMC-EDF-805; INEL-95/029. LMITCO. Rev. 0, December 13, 1995. Rev. 1, October 27, 1997. Rev. 2, April 12, 2001. Rev. 3, July 9, 2002. Rev. 4, September 13, 2002 (RWMC-EDF-805; INEL-95/029)	BBWI Document Control	9/13/2002
P1411S	INEEL/CON-02-00704	Overview of an Integrated Comprehensive Environmental Response, Compensation and Liability Act Evaluation of the Subsurface Disposal Area at the Idaho National Engineering and Environmental Laboratory. (INEEL/CON-02-00704)	K. J. Holdren	08/04/2002
P1412S	EGG-WM-9707	Radioactive Waste Management Complex Investigations Report, Volumes 1 through 4 (EGG-WM-9707)	M.L. Paarmann	1991
P1413S	SR-SDD-HOM-B	AMWTP Form-1900, AMWTP Offsite Waste Stream Profile for SR-SDD-HOM-B, SRS Solidified Inorganics from 211-F (SR-259) (SR-SDD-HOM-B)	Jim Vernon, CCP AKE	04/17/2012
P1414S	SR-SDD-HOM-A	AMWTP Form-1900, AMWTP Offsite Waste Stream Profile for SR-SDD-HOM-A, SRS Solidified Organics from 211-F (SR-258) (SR-SDD-HOM-A)	Jim Vernon, CCP AKE	04/17/2012
P1415A	CCP-AK-SRS-7	Central Characterization Project Acceptable Knowledge Summary Report For Savannah River Site Waste Streams: SR-W027-773A-HET, SR-W027-773A-HOM (CCP-AK-SRS-7)	Mark Pearcy	08/12/2011

Implementing Document: MP-TRUW-8.13

TRACKING NUMBER	DOCUMENT NUMBER	DOCUMENT TITLE/DESCRIPTION	DOCUMENT AUTHOR	DOCUMENT DATE
P1416A	CCP-AK-SRS-13	Central Characterization Project Acceptable Knowledge Summary Report For Savannah River Site Site Deactivation and Decommissioning Waste Waste Streams: SR-SDD-HOM-A, SR-SDD-HOM-B, SR-SDD-HET-A (CCP-AK-SRS -13)	Mike Ramirez	02/23/2012
P1417A	N/A	Pollution Prevention/Waste Minimization Plan	A. M. Collins	01/01/2004
P1418A	W0660-0055-KH	Analytical Laboratory Safety Analysis Report (W0660-0055-KH)	MFC	04/06/2006
P1419A	W0660-0035-0P	Waste Preparation Procedure for Analytical Laboratory Waste Disposal (W0660-0035-0P)	J.R.Krsul	08/14/1991
P142A	N/A	Material Safety Data Sheet for ZL-30A Zyglo Penetrant. Magnaflux Corporation	Magnaflux Corporation; Obtained from WASTREN files.	4/4/1996
P1420S	PLN-2084	Project Execution Plan for the INTEC Area Cleanup Project (PLN-2084)	CH2M-WG Idaho	06/02/2008
P1422S	PLN-2085	Project Execution Plan for the ICP Radioactive Waste Management Complex Project. Project Nos. 28338 and 23957 (PLN-2085)	CH2M-WG Idaho	07/30/2009
P1424S	N/A	INL Integrated Waste Tracking System (IWTS) Container Profiles	INL	Variable
P1425A	LA-5645	Guidelines for the Interim Storage of AEC-Generated Solid Transuranic Wastes (LA-5645)	LANL	06/01/1974
P1426A	ORAUT-TKBS-0007-2	Idaho National Laboratory and Argonne National Laboratory-West – Site Description (ORAUT-TKBS-0007-2)	Oak Ridge Associated Universities, Dade Moeller, MJW Technical Services	08/02/2010
P1427S	DOE/EIS-0203-F-8A-03 - DOE/EIS-0290-8A-01	Remote-Handled Transuranic Waste Final Environmental Impact Statement for INTEC/CPP and the AMWTP (DOE/EIS-0203-F-8A-03 - DOE/EIS-0290-8A-01)	DOE	01/01/2006
P1428S	HWB 04-07	Termination of Settlement Agreement, No. HWB 04-07 (CO) (HWB 04-07)	State of New Mexico, General counsel, Ryan Flynn	08/16/2012
P1429S	WSRC-RP-89-575-VOL-6	Safety Analysis - 200F - Area; Savannah River Site; Building 235-F; Final Safety Analysis Reports (U); Volume 6 (WSRC-RP-89-575-VOL-6)	Westinghouse Savannah River Co.	11/01/1992
P143A	N/A	Material Safety Data Sheet for Developer Fluid Contained in Film Pod. Polaroid Corporation.	Polaroid Corporation; Obtained from WASTREN files.	2/10/1986

Implementing Document: MP-TRUW-8.13

TRACKING NUMBER	DOCUMENT NUMBER	DOCUMENT TITLE/DESCRIPTION	DOCUMENT AUTHOR	DOCUMENT DATE
P1430S	IAG-592	Roles and Responsibilities for Sludge Repackage Project Waste Transfers Between ITG and CWI (IAG-592)	Idaho Cleanup Project, INL	12/04/2013
P1431S	DPSTSA-200-10-1	Safety Analysis - 200 Area; Savannah River Plant; Separations Area Operations; 238PuO2 Fuel Form Facility (Sup. 1) (DPSTSA-200-10-1)	H.R. Haynes	06/01/1983
P1432S	SP-400	Material Safety Data Sheets (MSDS) WaterWorks SP-400 (SP-400)	WaterWorks America Inc	none
P1433S	DPSTSA-200-10; Sup. 15	Safety Analysis - 200 Area; Savannah River Plant; Building 235-F (DPSTSA-200-10; Sup. 15)	SAIC	08/01/1986
P1434S	SOP 235-F-3351J	Packaging and Sealing TRU Waste in 55-Gallon Drums (SOP 235-F-3351J)	Leroy Odum	06/12/2001
P1435S	IDO-17021-V1; TID-4500	Safety Analysis Report Advanced Test Reactor Vol. 1 of 2 (IDO-17021-V1; TID-4500)	D. R. deBoisblanc, S. Cohen	04/01/1965
P1436S	INEL-94/0113	Hazard Assessments for Facilities Located at the Test Reactor Area (TRA) (INEL-94/0113)	Don R. Chick, Mike O. Fryer, Doug J. Taylor, Luther D. Watson	07/01/1995
P1437S	INEL/EXT-99-00902	Characterization and Decision Analysis Report for Test Reactor Area 654 and 641 (INEL/EXT-99-00902)	J.D. Long	10/01/1999
P1438S	IN-1046	ETR Operations Branch Progress Report for Cycle No. 84, Sep 25, 1966 - Nov 6, 1966. (IN-1046)	E.H. Smith, et al.	12/16/1966
P1439S	IDO-17144	ETR operations Branch Progress Report for Cycle No.76, October 24, 1965 - December 5, 1965. (IDO-17144)	E.H. Smith, et al.	01/21/1966
P144A	N/A	Material Safety Data Sheet for KODAK Developer D019. CAT 146 4593, CAT 194 6045. Eastman Kodak Company	Eastman Kodak Company; Obtained from WASTREN files.	03/14/1984
P1440S	IDO-17184	ETR Operations Branch Progress Report for Cycle No. 79, 02/27/66 - 04/07/66 (IDO-17184)	E.H. Smith, et al.	06/15/1966
P1441S	IN-1037	ETR Operations Branch Progress Report for Cycle No. 83, 08/14/66 - 09/25/66 (IN-1037)	E.H. Smith, et al.	11/01/1966
P1442S	IN-1071	ETR Operations Branch Progress Report for Cycle No. 86, 12/15/66 - 01/30/67 (IN-1071)	E.H. Smith, et al.	03/09/1967
P1443S	IN-1059	ETR Operations Branch Progress Report for Cycle No. 85, 11/06/66 - 12/15/66 (IN-1059)	E.H. Smith, et al.	01/31/1967

Implementing Document: MP-TRUW-8.13

TRACKING NUMBER	DOCUMENT NUMBER	DOCUMENT TITLE/DESCRIPTION	DOCUMENT AUTHOR	DOCUMENT DATE
P1444S	DPSTSA-300-3A	Safety Analysis - 300 Area, Savannah River Plant, Raw Materials Area Operations, Fuel Fabrication Facility, Building 321-M (DPSTSA-300-3A)	A.J. Renwick, J.M. Low	06/01/1987
P1445S	DPSTSA-200-10-SUP-4	Safety Analysis - 200 Area, Savannah River Plant, F-Canyon Operations (U) (DPSTSA-200-10-SUP-4)	SAIC	02/01/1986
P1446S	DPSTSY-200-1F Vol. 1	Safety Analysis - 200 Area, Savannah River Plant, F-canyon Operations (DPSTSY-200-1F Vol. 1)	W.S. Durant, W.C. Perkins, T. F. Severynse	12/01/1983
P1447S	WSRC-RP-89-575-VOL-6	Safety Analysis - 200-F Area, Savannah River Site, Building 235-F, Final Safety Analysis Report (U) (WSRC-RP-89-575-VOL-6)	Westinghouse Savannah River Company	11/01/1992
P1448S	WSRC-SA-96-26	Central Laboratory Facility - Buildings 772-F, 772-1F, and 772-4F, Safety Analysis Report (WSRC-SA-96-26)	Savannah River Site	03/01/2008
P1449S	DPSTSY-200-11	Systems Analysis - 200 Area, Savannah River Plant, HB-Line Operations (DPSTSY-200-11)	H.M. Kelley, R.V. Slates, E.W. Holtzscheiter	05/01/1978
P145A	N/A	Material Safety Data Sheet for KODAK INDUSTREX Developer Replenisher, Part A. CAT 139 7215. Eastman Kodak Company	Eastman Kodak Company; Obtained from WASTREN files.	1/3/1985
P1450S	SRL-MRG-90-9018	Calculation Note: Risk Assessment for Recovery of Pu 242 from Mark 42 Assemblies (U) (SRL-MRG-90-9018)	Thomas P. Henry	06/05/1990
P1451S	300-TOP-6	Temporary Operating Procedure, Sampling TCE Solutions (300-TOP-6)	F.C. Rhode	09/18/1986
P1452S	300-TOP-8	Temporary operating Procedure: Transferring 1,1,1-Trichloroethane (1,1,1-TCE) to DOT-17C drums (300-TOP-8)	C.P. Breidenbach	09/21/1987
P1453S	321-STP-180	Special Test Procedure, Mark 41 Outer Target Development, Pilot Run (321-STP-180)	J.R. Hester	01/24/1975
P1454S	DPSOL 321-1345	Storing Tubes in Honeycomb Rack (DPSOL 321-1345)	Savannah River Site	06/07/1977
P1455S	DPSOL 321-1040; DPSOL 321-1055	Drawbench Tooling; Cleaning Tubes After Drawing or Straighting (DPSOL 321-1040; DPSOL 321-1055)	Savannah River Plant	04/28/1977
P1456S	N/A	Material safety data sheets (MSDS) for IMBIBER BEADS®	IMBIBITIVE TECHNOLOGIES AMERICA	06/01/2012
P1457A	IW-LAB-S5490-221F	Form-1900 INTEC lab IW-LAB-S5490-221F, IDC: IW-525 (IW-LAB-S5490-221F)	AMWTP	01/12/2010

Implementing Document: MP-TRUW-8.13

TRACKING NUMBER	DOCUMENT NUMBER	DOCUMENT TITLE/DESCRIPTION	DOCUMENT AUTHOR	DOCUMENT DATE
P1458A	IW-LAB-S3900-221F	Form 1900 IW-LAB-S3900-221F, IDC: IW-602 (IW-LAB-S3900-221F)	AMWTP	No date
P1459S	N/A	Upcoming Lot 3 RH-TRU radioanalytical work	Jeffery S. Laug	09/06/0112
P146A	N/A	Material Safety Data Sheet for KODAK INDUSTREX Developer. CAT 162 8528. Eastman Kodak Company.	Eastman Kodak Company; Obtained from WASTREN files.	8/27/1984
P1460S	N/A	Upcoming Lot 3 RH-TRU radioanalytical work	Jeffery S. Laug	09/06/0112
P1461S	N/A	Material Data Safety Sheet Drierite®, indicating 8 mesh (adsorbent)	Sciencelab.com, Inc.	06/09/2012
P1462S	CCP-AK-INL-605	Central Characterization Project Sampling and Analysis Plan for the REMOTE-HANDLED TRANSURANIC (RH-TRU) DEBRIS WASTE from the EBR-I REACTOR AT THE IDAHO NATIONAL LABORATORY (INL) WASTE STREAM: ID-EBR-S5000 (CCP-AK-INL-605)	CCP, Larry Porter	08/09/2012
P1463S	RFP-1032	Production of Neptunium Metal on a 100-400 Gram Scale (RFP-1032)	D.L. Baaso, W.V. Conner, and D.A. Burton	12/05/1967
P1464A	SR-BCLDP.003.001	Form-1900 offsite waste profile SR-BCLDP.003.001. IDC: SR-261 (SR-BCLDP.003.001)	AMWTP	08/22/2012
P1465A		Form 1900-Offsite waste stream profile Savannah River Site. IDC SR-260 ()	AMWTP	05/09/2012
P1466S	ID-AECHDM	Waste Stream Profile Form, ID-AECHDM, Central Characterization Project, November 11, 2011. (ID-AECHDM)	Central Characterization Project, CCP	11/11/2011
P1467A	CCP-AK-SRS-530	Central Characterization Project; Acceptable Knowledge Summary Report for Battelle Columbus Laboratories Decommissioning Project (BCLDP); Homogeneous Transuranic Waste from the Building JN-1 Hydraulic Room; Waste Stream: SR-BCLDP.003 – Hydraulic Sludge and Debris; SR-BCLDP.003.001 - CH Hydraulic Sludge and Debris (CCP-AK-SRS-530)	Irene Quintana, CCP	02/01/2012
P1468A	CCP-AK-SRS-14	Central Characterization Project; Acceptable Knowledge Summary Report for Savannah River Site; Fuel Fabrication Facility Transuranic Waste; Waste Streams: SR-W027-321-322M-HET; SR-W027-321M-HOM (CCP-AK-SRS-14)	Mike Ramirez, CCP	02/13/2012
P1469A	SR-W027-221H-HOM	AMWTP Form-1900, DOE CH-TRU Waste Profile for SR-W027-221H-HOM, SRS Solidified Inorganics from 221H (SR-256) (SR-W027-221H-HOM)	AMWTP	11/07/2011

Implementing Document: MP-TRUW-8.13

TRACKING NUMBER	DOCUMENT NUMBER	DOCUMENT TITLE/DESCRIPTION	DOCUMENT AUTHOR	DOCUMENT DATE
P147A	N/A	Material Safety Data Sheet for KODAK HRP Developer. CAT 140 1306. Eastman Kodak Company.	Eastman Kodak Company; Obtained from WASTREN files.	6/25/1984
P1470A	SR-W027-321M-HOM	AMWTP Form-1900, DOE CH-TRU Waste Profile for, SRS SR-W027-321M-HOM Solidified Organics from 321M (SR-260) (SR-W027-321M-HOM)	AMWTP	05/14/2012
P1471A	SR-W027-235F-HOM	AMWTP Form-1900, DOE CH-TRU Waste Profile for, SRS SR-W027-235F-HOM Inorganic homogeneous solids (SR-255). (SR-W027-235F-HOM)	AMWTP	10/20/2011
P1472S	ANL/D&D/TM-96/3	Decontamination and Decommissioning of 61 Plutonium Gloveboxes in D-Wing, Building 212, Argonne National Laboratory-East: Final Project Report (ANL/D&D/TM-96/3)	C.L. Cheever, R.W. Rose	unknown
P1473A	DDP 5.11	Completed Checklists for DDP 5.11, "Bagout and Packaging of Lead from Gloveboxes" (DDP 5.11)	ANL-East	12/01/1993
P1474S	DOE/NE-ID-11223	Engineering Evaluation/Cost Analysis for the Accelerated Retrieval Project II (DOE/NE-ID-11223)	Department of Energy	03/01/2005
P1475A	WTD-91-027	Historical Report of the Transuranic Waste Pits and Trenches at the Subsurface Disposal Area of the Radioactive Waste Management Complex at the INEL (WTD-91-027)	Idaho National Lab (INL)	08/01/1991
P1476S	RF-U421	Solid Radioactive Waste Disposal Order and Shipment Data, for shipments to Pit 4 and Pit 6, Area 1 Phase II (RF-U421)	Idaho National Lab (INL)	04/23/1968
P1478S	TWTF-46	TWTF Buried Waste Characterization; Rocky Flats Trip Report from 1973 (TWTF-46)	Allied Chemical Corp.,	03/03/1981
P1479S	EDF-8180	Engineering Design File, Assessment of Residual Liquid Formation in Waste Soil Drums from the Subsurface Disposal Area (EDF-8180)	Idaho National Lab (INL)	06/21/2007
P148A	N/A	Material Safety Data Sheet for KODAK RP X-OMAT Developer Replenisher. Eastman Kodak Company.	Eastman Kodak Company; Obtained from WASTREN files.	12/31/1985
P1480S	EMRTC Report FR 10-13,	Results of Oxidizing Solids Testing (EMRTC Report FR 10-13,)	Idaho National Lab (INL)	04/12/2010

Implementing Document: MP-TRUW-8.13

TRACKING NUMBER	DOCUMENT NUMBER	DOCUMENT TITLE/DESCRIPTION	DOCUMENT AUTHOR	DOCUMENT DATE
P1481S	RPT-190	Independent Investigation report of the November 2005 Drum Fire at the Idaho National Laboratory Site (RPT-190)	Idaho National Lab (INL)	03/07/2006
P1483A	ID-MFC-S5490	Form 1900, Materials Fuel Complex (MFC)off-site waste profile form (ID-MFC -S5490)	Jack Weisgerber	12/06/2012
P1485S	RFP-1347	RF-P114 Disposal of Contaminated Lithium-Metal Scrap-Report (RFP-1347)	Rocky Flats Plant (RF)	9/19/1969
P1487S	AE-C-008	Certification package for NFT filters used for waste drums. (AE-C-008)	NFT Incorporated	11/12/1993
P1488S	NBL-PC-IE-2	Separation of Plutonium by Mini Anion-Exchange (NBL-PC-IE-2)	New Brunswick Laloratory, Jon R. Weiss	03/10/1978
P1489S	P3001	Packaging CH-TRU Waste for Shipment to Idaho National Laboratory (INL) and Final Disposition at the Waste Isolation Pilot Plant (WIPP). (P3001)	WMO	12/09/2009
P149A		Material Safety Data Sheet for AZ-3 Zyglo Emulsifier. Magnaflux Corporation	Magnaflux Corporation; Obtained from WASTREN files.	5/1/1986
P1490S	NBL-SA-Pu(I)-1	Determination of the Isotopic Composition of Plutonium By Thermal Ionization Mass Spectrometry (NBL-SA-Pu(I)-1)	New Brunswick Laboratory (NBL)	No Date
P1491S	NBL-SP-Pu-2	Dissolution of Plutonium Containing Materials Using Sealed Reflux (NBL-SP-Pu-2)	New Brunswick Laboratory (NBL)	No Date
P1492S	Work Plan 09-WM-093 (CCP P3002)	Solidification and Packaging CH-TRU Liquid Waste for Shipment to Idaho National Laboratory (INL) and Final Disposition at the Waste Isolation Pilot Plant (WIPP); Bulking Tub Neutralization and Solidification (Work Plan 09-WM-093 (CCP P3002))	WMO	N/A
P1493S	NBL-SA-PP-I	Determination Of Weight Loss of Plutonium Oxide on Heating (NBL-SA-PP-I)	New Brunswick Laboratory (NBL)	No Date
P1494S	NBL-SA-PP-2,	Determination of Specific Gravity and Density of Plutonium Solutions (NBL-SA-PP-2,)	New Brunswick Laboratory (NBL)	No Date
P1495S	NBL-SA-Pu(E)-1.1	Determination of Plutonium Using Automated Controlled-Potential Coulometry (NBL-SA-Pu(E)-1.1)	New Brunswick laboratory (NBL)	No Date

Implementing Document: MP-TRUW-8.13

TRACKING NUMBER	DOCUMENT NUMBER	DOCUMENT TITLE/DESCRIPTION	DOCUMENT AUTHOR	DOCUMENT DATE
P1496S	NBL-SP-Pu-1,	Dissolution. of Pu-Containing Materials Using Acid Digestion (NBL-SP-Pu-1,)	New Brunswick Laboratory (NBL)	No Date
P1497S	ANL-CMTI -8502	Liquid-Liquid, Packed Column Countercurrent Extractor for Pu Extraction from U-Pu-Fe (ANL-CMTI -8502)	ANL-E, W. Miller	09/19/1983
P1498S	MIL -CMT I -8883	Safety Review - Plutonium Experiment in G.118 (MIL -CMT I -8883)	ANL-E. T. Tomczuk, W. Miller	02/20/1985
P1499S	ANL -CMTI -8884	Trip Report Visit to LANL and Rocky Flats Analytical Laboratory (ANL -CMTI -8884)	ANL-E, Bowers, D. L., Heinrich, R. R., Huff, E. A.,	02/26/1985
P150A	N/A	Material Safety Data Sheet for ZP-Zyglo Aqueous Developer. Magnaflux Corporation.	Magnaflux Corporation; Obtained from WASTREN files.	11/13/1985
P1500S	AE.I.030	Alpha Radiolysis of TRUEX-CCl4 with 241Am (AE.I.030)	ANL-E, Kalina, D.,	05/23/1985
P1501S	AE-I-031	Safety Review-PFP Waste Demonstration Run in G-117 (AE-I-031)	ANL-E, R. Leonard	06/17/1985
P1502S	ANL.CMTI-9012,	Safety Review of Facilities for the Determination of Hydrogen, Oxygen, and Nitrogen in Plutonium-Bearing Metals, Alloys, Oxides, Carbides, and Some Metal Compounds; Building 205, Room G-102 (ANL.CMTI-9012,)	ANL-E, H. Goodspeed, R. Heinrich, and D. Gracyk,	09/16/1985
P1503S	ANL-CMTI-9073	Conceptual Process for Reduction of Uranium Oxides to the Metal (ANL-CMTI-9073)	ANL-E, R. Steunenberg, Z. Tomczuk,	12/17/1985
P1504S	NBL-SA-U(E)-1	Determination of Uranium by Ferrous Reduction in Phosphoric Acid and Titration with Dichromate (NBL Titrimetric Method (NBL-SA-U(E)-1)	ANL-E, I. Frank	11/24/1999
P1505S	NBL-SA-U(E)-3.1,	Determination of Uranium by Automated Constant Current Coulometry (NBL-SA-U(E)-3.1,)	New Brunswick Laboratory (NBL)Paul V. Croaatto,	11/24/1999
P1506S	NBL-SA-U(E)-6	Determination of Uranium by Ferrous Reduction in Phosphoric Acid and Titration with Cerium (IV). (NBL-SA-U(E)-6)	New Brunswick Laboratory (NBL), Jeffrey P. Zebrowski,	11/24/1999
P1507S	NBL-CAL-Pu(E)-1	Preparation of Plutonium Blind Standard Solution and A1iquants (NBL-CAL-Pu(E)-1)	New Brunswick Laboratory (NBL), M. I. Spaletto,	12/03/1999
P1508S	Work Plan 09-WM-094	Solidification and Packaging CH-TRU Liquid Waste for Shipment to Idaho National Laboratory and Final Disposition at the Waste Isolation Pilot Plant; Bench Scale Neutralization and Solidification (Work Plan 09-WM-094)	WMO	N/A

Implementing Document: MP-TRUW-8.13

TRACKING NUMBER	DOCUMENT NUMBER	DOCUMENT TITLE/DESCRIPTION	DOCUMENT AUTHOR	DOCUMENT DATE
P1509S	CHTRU-001	Project-Specific Sampling and Analysis Plan (PSAP) Containerized Waste Material DQO and SAP Instructions; CH TRU Liquids Bulking/Neutralization/Solidification Project (CHTRU-001)	WMO	12/03/2009
P151A	N/A	Safety Analysis Report for the TRUPACT-II Shipping Package. Volume 4, Appendix 3.6.8. Revision 14	Obtained from WASTREN files.	10/1/1994
P1510A	PRD KLN-2	Basic and Applied Studies in Liquid-Liquid Extraction, Ion Exchange, and Extraction Chromatography (PRD KLN-2)	Kenneth L.Nash, Seth Snyder	06/02/2000
P1511S	NBL-SP-Pu-1	Dissolution of Plutonium-Containing Materials Using Acid Digestion (NBL-SP-Pu-1)	New Brunswick Laboratory (NBL), Alma V. Stiffin,	02/13/1999
P1512S	NBL-SP-Pu-3	Dissolution of Plutonium-Containing Materials Using Sodium Bisulfate Fusion (NBL-SP-Pu-3)	New Brunswick Laboratory (NBL), Alma V. Stiffin,	12/13/1999
P1513S	ANL-CMTI-10118	Safety Review for Processing NBL Waste Solutions in G-134 and G-117 (ANL-CMTI-10118)	New Brunswick Laboratory (NBL), Chamberlain, D.B.,	09/14/1989
P1514S	WMHPM-0012	Radioactive Wastes, Radioactive Solid and Liquid Waste Containment, Special Treatment, and Segregation Requirements (WMHPM-0012)	Waste Management Operations	02/01/1992
P1515S	NBL-SP-Pu-3.1	Dissolution of Plutonium-Containing Materials Using Sodium Carbonate Fusion (NBL-SP-Pu-3.1)	New Brunswick Laboratory (NBL), Alma V. Stiffin,	12113/1999
P1516S	ANL.CMT/.101151	Safety Review for the Gas Generation Studies in Support of the WIPP (ANL.CMT/.101151)	ANL-E, Reed, D., Okajima, S.	1011/1990
P1517S	ANL-CMTI-10155	Safety Review Stripping Salt Previously Used in the Box 1 Electrorefiner in G-118 (ANL-CMTI-10155)	ANL-E, Fischer. D. F., Johnson, T. R.,	10/04/1990
P1518A	ANL-CMTI-10S08	CMT Division Separation Science and Technology Section - January 1992 (ANL-CMTI-10S08)	ANL-E, Vandergrift. G.F.	03/31/1992
P1519A	ANL-CMTI-9256	Revised Criticality Hazards Control Statement for IFR Fuels Reprocessing Laboratory G-118 Located in Building 205 (ANL-CMTI-9256)	ANL-E, Wolson, R.,	02/01/1993
P152A	N/A	"Plutonium Metal Feed Specification for Use in the Weapons Program." Volume I.	Rocky Flats	3/22/1985
P1520S	WMHPM-APOA	Waste Management Handling Procedures Manual; Appendix A, Radioactive Waste Disposal Requisitions (WMHPM-APOA)	Waste Management Operations Department	07/01/1991

Implementing Document: MP-TRUW-8.13

TRACKING NUMBER	DOCUMENT NUMBER	DOCUMENT TITLE/DESCRIPTION	DOCUMENT AUTHOR	DOCUMENT DATE
P1521S	ACL-124	Determination of Technetium-99 In Environmental Samples (ACL-124)	ANL-E, Francis Markun, Lesa L. Wetter,	10/23/1987
P1523S	ACL-181	Standard Operating Procedure: Operation of Kicksort Alpha Spectrometers with Associated Ortec ADCAM and AST Personal Computer with Ortec Software for Isotopic Analysis of Environmental Samples by Alpha Spectrometry Using Isotope Dilution (ACL-181)	ANL-E, Lesa L. Smith	03/06/1993
P1524S	WMHPM-0001, WMHPM-0011, WMHPM-0012, WMHPM-0014, WM	Waste Management Handling Procedures Manual, Sections 11, 12, 14, 15, and Appendix A (WMHPM-0001, WMHPM-0011, WMHPM-0012, WMHPM-0014, WM)	Waste Handling Operations Department	Various
P1525S	PRD KLN-1	Novel Liquid-liquid Extraction and Extraction Chromatographic Systems for the Separation and Preconcentration of Radionuclides (PRD KLN-1)	Mark L, Dietz and Fred A. Cafasso	11/01/1996
P1526S	WMHPM-0004, WMHPM-0011, WMHPM-0012, WMHPM-0013, WM	Waste Management Handling Procedures Manual, Sections 4,11-15, Appendices A, C-D (WMHPM-0004, WMHPM-0011, WMHPM-0012, WMHPM-0013, WM)	Plant Facilities and Services, Waste Management	Various
P1527S	PRD KLN-2	Basic and Applied Studies in Liquid-Liquid Extraction and Ion Exchange (PRD KLN-2)	Kenneth L. Nash and Fred J. Schmitz	11/05/1996
P1528S	NBL-SP-Pu-5	Preparation of Weight Aliquants of Plutonium Solutions (NBL-SP-Pu-5)	New Brunswick Laboratory (NBL), M. Spaletto	12/13/1999
P1529S	NBL-SP-Pu-6	Electrolytic Cleaning and Dissolution of Plutonium Metal (NBL-SP-Pu-6)	New Brunswick Laboratory (NBL), M. Spaletto	12/13/1999
P153A	N/A	Analytical Requirement Review of Saltcrete. Item Description Code 804. 96-RMRS-SSOC-0004.	Michael Connell and Steven Hughes; Ernie Garcia of RFETS.	2/20/1996
P1530S	NBLSP-PU-7	Cleaning by Filing and Dissolution of Plutonium Metal (NBLSP-PU-7)	New Brunswick Laboratory (NBL), A. Stiffin	12/13/1999
P1531S	NBL-SP-8	Electrodeposition of Plutonium and other Alpha-Active Actinides (NBL-SP-8)	New Brunswick Laboratory (NBL), A. Stiffin	12/13/1999
P1532S	Various	Waste Management Handling Procedures Manual, Radioactive Wastes sections 11, 13, 14, 15, Appendices A, C, 0 (Various)	Waste Management Operations Department	Various
P1533S	NBL-SP-U-2	Dissolution of Uranium Metal Samples (NBL-SP-U-2)	New Brunswick Laboratory (NBL), A. Stiffin	12/13/1999

Implementing Document: MP-TRUW-8.13

TRACKING NUMBER	DOCUMENT NUMBER	DOCUMENT TITLE/DESCRIPTION	DOCUMENT AUTHOR	DOCUMENT DATE
P1534S	NBL-SP-U-3	Dissolution of Uranium Oxides in Powder or Pellet Form (NBL-SP-U-3)	New Brunswick Laboratory (NBL), I. Frank	12/13/1999
P1535S	NBL-SP-U-3.1	Microwave Dissolution of U02 and U308 (NBL-SP-U-3.1)	New Brunswick Laboratory (NBL), Iris W. Frank	12/13/1999
P1536S	NBL-SP-U-3.2	Microwave Dissolution of Uranium-Contaminated Alumina Trap Material (NBL -SP-U-3.2)	New Brunswick Laboratory (NBL), Iris W. Frank	12/13/1999
P1537A	PRD KLN-3	Characterization of New Chelating Agents (PRD KLN-3)	Chemistry Division; Heavy Elements Coordination Chemistry; Argonne National Laboratory	11/02/1996
P1538S	NBL-5P-U-4	Dissolution of Uranium-Aluminum and Uranium-Aluminum-Silicon Alloys (NBL-5P-U-4)	New Brunswick Laboratory (NBL), Iris W. Frank	12/13/1999
P1539S	Various	Waste Management Handling Procedures Manual, Appendix V, Waste Analysis Plan (Various)	Waste Management Operations Department	Various
P154A	INEL-95/0475	Uncertainty Analysis of the SWEPP Drum Assay System for Graphite. Content Code 300. INEL-95/0475. (INEL-95/0475)	Yale D. Harker, Larry G. Blackwood, and Teresa R. Meachum; LMITCO.	9/1/1995
P1540S	N/A	Safety Analysis Report - New Brunswick Laboratory	Mason, Robert A.	10/01/1990
P1541S	N/A	Draft Safety Analysis Report - New Brunswick Laboratory (Draft)	Dallmann, D. Eric	01/01/2000
P1542S	NBL-SP-U-S.1	Dissolution of Uranium-Containing Scrap and Ash Samples Using Acid Leaching (NBL-SP-U-S.1)	New Brunswick Laboratory (NBL), Alma V. Stiffin	12/13/1999
P1543S	Report DL5.1	Building 212 D Wing Glovebox D&D Project Documentation Listing (Report DL5.1)	B. M. Pitman and P. S. Carlson	01/21/1994
P1544S	NBL-SP-U-S.2	Dissolution of Uranium-Containing Materials Using Sodium Carbonate (NBL-SP-U-S.2)	New Brunswick Laboratory (NBL), Alma V. Stiffin	12/14/1999
P1545S	NBL-SP-U-7	Dissolution of Pre-Product and Product Materials (NBL-SP-U-7)	New Brunswick Laboratory (NBL), Alma V. Stiffin	12/14/1999
P1546S	NBL-SP-U, PU(1)-1	Purification of Uranium and Plutonium by Anion Exchange for Mass or Alpha Spectrometric Analysis (NBL-SP-U, PU(1)-1)	New Brunswick Laboratory (NBL), B. Srinivasan	12/14/1999

Implementing Document: MP-TRUW-8.13

TRACKING NUMBER	DOCUMENT NUMBER	DOCUMENT TITLE/DESCRIPTION	DOCUMENT AUTHOR	DOCUMENT DATE
P1547S	CMT-30-0470	Safety Analysis Report Building 205 G-Wing and K-Wing Laboratories (CMT-30-0470)	Kot, C. A, Srlnvasan, M. G.	12/01/1997
P1548A	PRD KLN-5	Two-Stage Molecular Agents (PRD KLN-5)	Chemistry Division; Chemical Separations; Argonne National Laboratory	11/21/1996
P1549A	PRD MLD-1	Synthesis of Compounds for Chemical Separations (PRD MLD-1)	Chemistry Division; Chemical Separations Science; Argonne National Laboratory,	04/07/1998
P155A	INEL-96/0343	Uncertainty Analysis of the SWEPP PAN Assay System for Glass Waste. Content Codes 440, 441, and 442. (INEL-96/0343)	Larry G. Blackwood, Yale D. Harker, Teresa R. Meachum, and Woo Y. Yoon; LMITCO	10/1/1996
P1550S	WIPP-DOE-069	Waste Acceptance Criteria for the Waste Isolation Pilot Plant (WIPP-DOE-069)	DOE/WIPP	12/01/1991
P1551S	NBL-SA-PP-1	Determination of the Weight Loss of Plutonium Oxide on Heating (NBL-SA-PP-1)	New Brunswick Laboratory (NBL), M. Irene Spaletto	12/03/1999
P1552S	NBL-SA-PP-2	Manual Determination of the Density and Specific Gravity of Uranium- and Plutonium- Containing Solutions (NBL-SA-PP-2)	New Brunswick Laboratory (NBL)	11/24/1999
P1553S	NBL-SA-U(E)-2.2	Determination of Uranium by the New Brunswick Laboratory High Precision Titrimetric Method-Gravimetric Version (NBL-SA-U(E)-2.2)	New Brunswick Laboratory (NBL), Anna M. Voeks,	12/02/1999
P1554S	DL 5.1	Building 212 0 Wing Glovebox D&D Project, Documentation Listing (DL 5.1)	ANL-E, B. Pitman, P. Carlson	02/10/1994
P1555S	DPP 5.8	Vacuum Pump D&D-Volume Reduction (DPP 5.8)	ANL-E, 8.M.Pitman, P.S.Carlson,	11/16/1993
P1556S	DPP-5.9	Diffusion Pump D&D (DPP-5.9)	ANL-E, S. Carlson	01/25/1994
P1557S	DPP 5.10	Contaminated Cooling Water System D&D (DPP 5.10)	ANL-E, B. M. Pitman, P. S. Carlson,	01/25/1994
P1558S	DPP 5.11	Bagout and Packaging of Lead from Glove boxes (DPP 5.11)	ANL-E, B. M. Pitman, P. S. Carlson,	01/13/1994
P1559S	DPP 5.12	Acid/Caustic Neutralization and Solidification (DPP 5.12)	ANL-E, B. M. Pitman, P. S. Carlson	02/21/1993

TRACKING NUMBER	DOCUMENT NUMBER	DOCUMENT TITLE/DESCRIPTION	DOCUMENT AUTHOR	DOCUMENT DATE
P156A	INEL 96/0257	Uncertainty Analysis of the SWEPP PAN Assay System for Combustible Waste. Content Codes 330 and 336. INEL 96/0257. (INEL 96/0257)	Yale D. Harker, Larry G. Blackwood, Teresa R. Meachum, and Woo Y. Yoon; LMITCO.	8/1/1996
P1560S	DPP 5.13	Inert Particulate Solidification (DPP 5.13)	ANL-E, B. M. Pitman, P. S. Carlson,	01/12/1994
P1561S	DPP 5.14	Oil and Organic Liquid Solidification (DPP 5.14)	ANL-E, B. Pitman, P. Carlson,	01/19/1994
P1562S	N/A	Waste Operations Operating Manual	ANL-Waste Management Operations	06/28/2000
P1563S	78016-4A-01	Building 212 D-Wing Glove Box D&D Project Plan (78016-4A-01)	P. S. Carlson, B. M. Pitman	11/06/1993
P1565S	N/A	Determination of waste generated in Buildings 108, 202, 203, 206, 223, 306, 315 and 331	Tom Krause	09/15/2000
P1566S	NBL-SA-Pu(E)-1	Determination of Plutonium by Controlled -Potential Coulometry (NBL-SA-Pu (E)-1)	New Brunswick Laboratory (NBL),	No Date
P1567S	IPS-230-00-01	Work Plan for the Replacement of the Area III GM Manipulator Power Cord (IPS-230-00-01)	T. S. Bray	07/22/1999
P1568S	28T-94 -086	NFS Glovebox 0&0 Procedures (28T-94 -086)	Nuclear Fuel Services, Inc	1995
P1569S	NBL-SA-U(E)-3	Determination of Uranium by Manual Constant Current Coulometry (NBL-SA-U(E)-3)	New Brunswick Laboratory (NBL)	11/24/1999
P157A	N/A	Proceeding of the Non-Destructive Assay and Non-Destructive Examination Waste Characterization Conference. CONF-940216	Don Kudera, LMITCO. L.V. East and G.K. Becker	2/16/1994
P1570S	NBL-SA-U(E)-S	Determination of Uranium by the Ignition (Gravimetric) Method (NBL-SA-U(E) -S)	New Brunswick Laboratory (NBL)	11/24/2999
P1571S	NBL-SA-U(E)-8	Determination of Micro- to Sub-microgram Quantities of Uranium Using Laser -Induced Kinetic Phosphorimetry (NBL-SA-U(E)-8)	New Brunswick Laboratory (NBL)	11/24/1999
P1572S	NBL-SA-U(E)-9	Determination of Uranium Blank Concentrations by Isotope Dilution and Thermal Ionization Mass Spectrometry (NBL-SA-U(E)-9)	New Brunswick Laboratory (NBL)	12/02/1999
P1573S	NBL-SA-U(I)-4	Determination of Isotopic Composition of Uranium by Thermal Mass Spectrometry (NBL-SA-U(I)-4)	New Brunswick Laboratory (NBL)	11/24/1999

Implementing Document: MP-TRUW-8.13

TRACKING NUMBER	DOCUMENT NUMBER	DOCUMENT TITLE/DESCRIPTION	DOCUMENT AUTHOR	DOCUMENT DATE
P1574S	NBL-SA-U(I)-4.1	Determination of Isotopic Composition of Uranium Total Evaporation Mass Spectrometry (Finnigan Mat 261) (NBL-SA-U(I)-4.1)	New Brunswick Laboratory (NBL)	12/02/1999
P1575S	NBL-SA-U, Pu(E)-1	Determination of Uranium and Plutonium Using Dilution Mass Spectrometry (NBL-SA-U, Pu(E)-1)	New Brunswick Laboratory (NBL)	12/03/1999
P1576S	NBL-SA-U, PU(I)-2	Determination of Isotopic Composition of Plutonium or Uranium by Thermal Ionization Mass Spectrometry (Finnigan MAT261) (NBL-SA-U, PU(I)-2)	New Brunswick Laboratory (NBL)	112/12/199
P1577S	NBL-SA-U, Pu(I)-3	Alpha Spectrometric Measurements for Alpha-emitting Nuclides (NBL-SA-U, Pu(I)-3)	New Brunswick Laboratory (NBL)	12/03/1999
P1578S	NBL-CAL-U(E)-1	Preparation of Standard Potassium Dichromate Titrant (NBL-CAL-U(E)-1)	New Brunswick Laboratory (NBL)	12/03/1999
P1579S	NBL-CAL-U(E)-2	Preparation of Uranium Standard Solutions (NBL-CAL-U(E)-2)	New Brunswick Laboratory (NBL)	12/03/1999
P158A	EGG-PHY-9204	Matrix Effects in TRU Assays using the SWEPP PAN Assay System. EGG-PHY-9204. (EGG-PHY-9204)	J. R. Smith INEL.	8/1/1990
P1580S	ACL.173	Contamination Control and Handling of Laboratory Waste (ACL.173)	Argonne National Lab - East (ANL-E)	10/26/1992
P1581S	ACL-178	Standard Operating Procedure: Cleaning of Mixed Waste Glassware (ACL-178)	Argonne National Lab - East (ANL-E)	10/26/1992
P1582S	ACL-176	Standard Operating Procedure: Volatile Organic Analysis for Mixed Waste (ACL-176)	Argonne National Lab - East (ANL-E)	10/26/1992
P1583S	ACL-201	Standard Operating Procedure: Gross Alpha/Beta Analysis of Soil and Sediment Samples by High-Pressure Microwave Digestion (ACL-201)	Argonne National Lab - East (ANL-E)	05/08/1995
P1584S	ACL-118	Standard Operating Procedure Operation of the Tennelec LB 5110 Series II Automatic Alpha-Beta Proportional Counter (ACL-118)	Argonne National Lab - East (ANL-E)	06/25/1996
P1585S	ACL-165	Separation of Plutonium, Thorium, Americium, and Uranium from Environmental Samples Utilizing Extraction Chromatography and Anion Exchange Chromatography (ACL-165)	Argonne National Lab - East (ANL-E)	06/25/1996
P1586S	ACL-204	Preconcentration and Determination of Actinides in Soil Samples Using Diphonlx TM Resin and a NaOH Total Dissolution (ACL-204)	Argonne National Lab - East (ANL-E)	11/19/1998

Implementing Document: MP-TRUW-8.13

TRACKING NUMBER	DOCUMENT NUMBER	DOCUMENT TITLE/DESCRIPTION	DOCUMENT AUTHOR	DOCUMENT DATE
P1587S	ACL-217	Using Ion Chromatography for the Determination of Anions in Radioactive and/or Low Volume Samples (ACL-217)	Argonne National Lab - East (ANL-E)	04/02/1999
P1588S	ACL-202	X-Ray Diffraction (XRD) of Plutonium Samples In Building 205, Rooms B-125 and B-130 (ACL-202)	Argonne National Lab - East (ANL-E)	09/12/1996
P1589S	ACL-247	Operation of the United Technologies Packard 2550 TRIAS Tri-Carb Liquid Scintillation Analyzer and Interlaced Compaq 4/25S System (ACL-247)	Argonne National Lab - East (ANL-E)	03/28/2000
P159A	RWMC-657	SWEPP Non-Destructive Assay (NDA) Methodology for Waste Entrained Uranium. RWMC-657 (RWMC-657)	G. K. Becker; LMITCO.	9/1/1993
P1590S	ACL-132	Sample Preparation and Separation of Plutonium, Americium, Uranium, and Strontium from Air Filters (ACL-132)	Argonne National Lab - East (ANL-E)	04/05/1988
P1591S	ACL-143	Determination of Uranium in Soils. Sediments. and Sludges by Kinetic Phosphorimetry (ACL-143)	Argonne National Lab - East (ANL-E)	05/16/2000
P1592S	ACL-144	Determination of Uranium in Waters by Kinetic Phosphorimetry (ACL-144)	Argonne National Lab - East (ANL-E)	5/24/19990
P1593S	ACL-148	Determination of Uranium in Rocky Flats Soils, Sediments, and Sludges by Kinetic Phosphorimetry (ACL-148)	Argonne National Lab - East (ANL-E)	02/11/1991
P1594S	ACL-164	Separation of Uranium from Rocky Flats Soils, Sediments, and Sludges for Isotopic Abundance Determinations (ACL-164)	Argonne National Lab - East (ANL-E)	09/09/1991
P1595S	ACL-072	Preparation of Environmental Samples for Gamma Spectroscopy Analysis (ACL-072)	Argonne National Lab - East (ANL-E)	01/03/1987
P1596S	ACL-108	Radium-226 and Radium-228 Determination in Water and Soil Samples Using NaI Detector and Least Squares Processing of Data (ACL-108)	Argonne National Lab - East (ANL-E)	11/17/1998
P160A	RWMC-EDF-658	Relative Isotopic Mass Ratio Gamma Measurements. RWMC-EDF-658 (RWMC-EDF-658)	W. Serrano; INEL.	6/28/1994
P161A	N/A	Dose Reconstruction Project Task 5. Estimating Historical Emissions from Rocky Flats. ChemRisk.	Colorado Department of Public Health and Environment (Prepared by ChemRisk)	11/1/1992
P1618S	WMD-QA-01	Quality Assurance Plan for ANL-E Waste Management Department (WMD-QA-01)	WMO	4/96

Implementing Document: MP-TRUW-8.13

TRACKING NUMBER	DOCUMENT NUMBER	DOCUMENT TITLE/DESCRIPTION	DOCUMENT AUTHOR	DOCUMENT DATE
P1619S	J0306-0007-SA-05	Quality Assurance Plan for ANL Waste Management Department (J0306-0007-SA-05)	WM Dept.	1/91
P162A	N/A	Dose Reconstruction Project Task 1. Identification of Chemicals and Radionuclides Used at Rocky Flats, Draft Report. ChemRisk.	ChemRisk for Colorado Department of Public Health and Environment.	1/1/1991
P1620S	Waste Management Operations	Container Management Practices (Chapter 2.12 of Waste Management Operating Procedures Manual) (Waste Management Operations)	ANL-Waste Management Operations	7/98-5/5/0
P1621S	Waste Management Operating Procedures Manual	Waste Management Operating Procedures Manual; Historic Chapter 4.5 (Waste Management Operating Procedures Manual)	Waste Management Operations Department	1/91-1/00
P1622S	0	Waste Management Operating Procedures Manual; Historic Chapter 4.8 (0)	Waste Management Operations Department	1/94 to 9/
P1623S	Waste Management Operating Procedures Manual	Waste Management Operating Procedures Manuel: historic Addendum 4 B (Waste Management Operating Procedures Manual)	ANL.E Environment Management Operations	07/23/1996
P1624S	NBL-SOP-ESH-4	Waste Disposal Requisition Process (NBL-SOP-ESH-4)	New Brunswick Laboratory	12/01/1994
P1627S	0	Waste Management Operating Procedures Manual. Historic Attachment 9.1A (0)	Waste Management Operations Dept.	2/5/97 to1
P1628S	0	Waste Management Operating Procedures Manual; Historic Chapter 9.15 (0)	Waste Management Operations Department	5/99 to 8/
P1629S	0	Waste Management Operating Procedures Manual; Historic Chapter 12.1 (0)	Waste Management Operations Department,	12/95 to 5
P163A	RT92-002	Rocky Flats Plant Plutonium Recovery Reference Process. (Including Historical References 1952 to 1991). RT92-002. (RT92-002)	Rocky Flats Plant	02/03/1992
P1630S	0	New Brunswick Laboratory ESH Manual, Chapter V, Section I, "Waste Management" (0)	Mansfield, C. L.	06/01/2000
P1631S	CCP-TP-005	Attachment 12 - Acceptable Knowledge Re-evaluation Checklist (CCP-TP-005)	ANL-E, Ben Gutierrez/Tom Krause	09/04/2002
P1632S		Surveys of Research in the Chemistry Division - 1988 ()	Leon M. Stock,Fred A. Cafasso	1988

Implementing Document: MP-TRUW-8.13

TRACKING NUMBER	DOCUMENT NUMBER	DOCUMENT TITLE/DESCRIPTION	DOCUMENT AUTHOR	DOCUMENT DATE
P1634S	Bldg. 212 DDD	Building 212 Glove Box Decontamination & Decommissioning Project. Glove Box Detailed Description Document (Bldg. 212 DDD)	ANL-E, R. E. Nietert	08/31/1992
P1635S	78016-4A-02	Building 212 0 Wing Glove Box Project, Project Management Plan, Quality Assurance Plan (78016-4A-02)	ANL-E, P. S. Carlson, W. E. Stacy	07/14/1993
P1636S	D303-101-W-T011	Revision II (Final) to the Argonne National Laboratory. East RCRA Part B Permit Application (D303-101-W-T011)	ANL-E Env Mgt Ops/ DOE/Argonne Group	08/20/1996
P1637S	0	Surveys of Research In the Chemistry Division -1992 (0)	L. Stock, F.Cafasso	1992
P1638S	0	Surveys of Research In the Chemistry Division - 1994 (0)	Leon M. Stock,Fred A. Cafasso	1994
P1639S	0	Chemical Sciences KC-03 Program Budget - Fiscal Years 1997,1988, and 1999 (0)	ANLE-Chemlstry Division	4/97
P164A	RT92-003	A Comprehensive History of the Rocky Flats Plutonium/Actinide Recovery Operations 1952 to 1991. (RT92-003)	L. R. Crisler	2/3/1992
P1640S	0	Environmental Management (Defense Funds) Field Work Proposals - Fiscal Years 2000, 2001, and 2 (0)	ANL-E	4/00
P1641S	D303-101-W-T011-A1	Addendum to the Revision II to the Argonne National Laboratory. East RCRA Part B Permit Application IL3 890 008 946 (Addendum 1) (D303-101-W-T011 -A1)	ANL-E Env Mgt Ops/DOE/Argonne Group	12/05/1995
P1642S	NBL-CAL-U(E).3	Preparation and Standardization of Potassium Dichromate Titrant (NBL-CAL-U(E).3)	Iris W. Frank	12/03/1999
P1643S	D303-101-W-T011	Update and Modification of the Argonne National Laboratory - East (ANL-E) Resource Conservation and Recovery Act Part B Permit Application (D303-101-W-T011)	AN;-E, G. Kulma, DOE/Argonne Group	08/14/1998
P1644S	NBL-CAL-U(EI)-1	Preparation of Uranium Spike Solution for Isotope Dilution Mass Spectrometry Analysis (NBL-CAL-U(EI)-1)	Anthony J. Traina	12/03/1999
P1645S	IL3890008946	RCRA Part B Permit Issued to Department of Energy Argonne National Laboratory - East Facility (IL3890008946)	Illinois EPA	09/30/1997
P1646S	AE-P-022	Basic Research in the Mission Agencies (AE-P-022)	National Science Board	1978
P1647S	NBL-S-U-1.1	Subsampling Liquid UF6 from Bulk Containers (NBL-S-U-1.1)	Usha I. Narayanan	12/02/1999

Implementing Document: MP-TRUW-8.13

TRACKING NUMBER	DOCUMENT NUMBER	DOCUMENT TITLE/DESCRIPTION	DOCUMENT AUTHOR	DOCUMENT DATE
P1648S	Q94AC193	Atomic Energy Defense Activities (Q94AC193)	Federation of American Scientists	05/03/1994
P1649S	SOP ACL-167	Standard Operating Procedure: Determination of Strontium in Environmental Samples Utilizing Extraction Chromatography (SOP ACL-167)	Judith S.Yaeger and Lesa L. Smith	01/26/1996
P165A	N/A	A Comprehensive History of the Rocky Flats Plutonium/Actinide Recovery Operations. 1952 – 1991.	Rocky Flats Plant, from BBWI Document Control	NOT DATED
P1650S		Naval Reactors, Arms Control Office of Intelligence, Questions and Answers ()	Federation of American Scientists	03/11/1992
P1651S		U.S. Nuclear Weapons Research, Development, Testing, and Production, and Naval Nuclear Propulsion Facilities ()	The Brookings Institution, Stephen I. Schwartz,	10/12/1999
P1652S	TZRP41	Department of Energy FY'99 Congressional Budget Table (TZRP41)	DOE	03/06/1998
P1653S	N/A	A Brief History of Materials R&D at Argonne National Laboratory from the Met Lab to Circa" 1995	ANL-E, Brian R.T. Frost	09/03/1996
P1654S	N/A	Materials and components Technology Division Research Summary.	ANL-E, R.W. Weeks	11/01/1987
P1655S	BL-S-U-3	The Removal and Cleaning of the UF6 Mass Spectrometer Inlet System Cold Traps (BL-S-U-3)	Paul V. Croatto	12/02/1999
P1656S	NBL-SP-Gen-2	Sieving, Grinding and Blending Operations (NBL-SP-Gen-2)	Patricia M. Santoliquido	05/14/1999
P1657S	NBL-SP-GEN-8	Operation of the NBL-Modified Cozzoli Ampulator (NBL-SP-GEN-8)	Paul V. Croatto	12/02/1999
P1658S	NBL-SP-U-9	Operation of the Buehler Abrasive Cutter for Cutting Uranium Metals of Less Than 3% U-235 Enrichment (NBL-SP-U-9)	Glennda J. Oriowicz	12/14/1999
P1659A	CBFO:NTP:JRS:GL:12-0700:UFC 2300.00	Termination of BNINW216 and BNINW218 Activities Pursuant to Settlement Agreement and Stipulated Final Order HWB 04-07 (CO) (CBFO:NTP:JRS:GL:12-0700:UFC 2300.00)	U. S. Department of Energy (DOE) Carlsbad Field Office (CBFO)	12/18/2012
P166A	RF/03/00/85/0/5	Rocky Flats Risk Assessment Guide. RF/03/00/85/0/5. Safety Analysis Engineering. (RF/03/00/85/0/5)	Bob Meyer, Radiological Assessments Corporation, Ft. Collins, CO.	3/1/1995
P1660S	0	About Yucca Mountain (0)	EPA	8/00
P1661S	0	Bettis Atomic Power Laboratory (0)	BAPL	7/00

TRACKING NUMBER	DOCUMENT NUMBER	DOCUMENT TITLE/DESCRIPTION	DOCUMENT AUTHOR	DOCUMENT DATE
P1662S	0	INEEL (0)	INEEL	8/00
P1663S	0	SRS Mission and Vision (0)	SRS	8/00
P1664S	0	About Sandia (0)	SNL	8/00
P1665S	0	Los Alamos National Laboratory Mission (0)	LANL	8/00
P1666S	SOP: ACL-113	Determination of Strontium In Environmental Water Samples (SOP: ACL-113)	Lesa L Wetter	07/31/1987
P1667S	0	Oak Ridge National Laboratory; About ORNL (0)	ORNL	8/00
P1668S	0	Creating the Laboratory's Future (LLNL) (0)	LLNL	8/00
P1669S	0	Hanford; Welcome to Hanford (0)	Hanford Site	8/00
P167A	RFP-2899	eptunium Processing at the Rocky Flats Plant. RFP-2899. William V. Conner and Donald L. Baaso (RFP-2899)	William V. Conner and Donald L. Baaso; Source:Bob Meyer, Radiological Assessments Corporation, Ft. Collins, CO.	9/20/1981
P1670S	SOP: ACL-117	Determination of Strontium in Environmental Soils and Vegetations (SOP: ACL-117)	Lesa L. Wetter	07/31/1987
P1671S	0	Chemical Technology Division; Vision, Mission, and Management Philosophy of CMT (0)	CMT	09/18/2000
P1672S	0	Chemistry Division; Strategic Research at the Frontiers of Chemistry (0)	ANL.E/CHM	08/24/2000
P1673S	SOP: ACL-124,	Determination of Technetium-99 In Environmental Samples (SOP: ACL-124,)	Francis Markun Lesa L. Wetter	10/23/1987
P1674A	Public Law 102.579	The Waste Isolation Pilot Plant Land Withdrawal Act (Public Law 102.579)	US Congress	10/92
P1675S	ANL-91/18	Chemical Technology Division Annual Technical Report 1990 (ANL-91/18)	Chemical Technology Division	05/01/1991
P1676S	SOP: ACL-226	Preparation of WIPP Solidified Waste (Simulated Type I Sludge CC 1111211) Performance Demonstration Sludge Blank for Metal Analysis (SOP: ACL-226)	K. J. Parish	04/17/1997
P1677S	ANL.92115	Chemical Technology Division Annual Technical Report 1991 (ANL.92115)	Chemical Technology Division	03/01/1992
P1678S	ANL-93117,	Chemical Technology Division Annual Technical Report 1992 (ANL-93117,)		06/01/1993
P1679S	ANL-7155	Annual Progress Report for 1965 Metallurgy Division (ANL-7155)	ANL-E, Frank G. Foote	1965

Implementing Document: MP-TRUW-8.13

TRACKING NUMBER	DOCUMENT NUMBER	DOCUMENT TITLE/DESCRIPTION	DOCUMENT AUTHOR	DOCUMENT DATE
P168A	RFP-3061	Status of Americium-241 Recovery at Rocky Flats Plant. RFP-3061. (RFP-3061)	From Bob Meyer, Radiological Assessments Corporation, Ft. Collins, CO.; J. B. Knighton, P. G. Hagan, J. D. Navratil, and G. H. Thompson	3/18/1981
P1680S	ANL-7000	Annual Progress Report for 1964 Metallurgy Division (ANL-7000)	ANL-E, Frank G. Foote	1964
P1681S	ANL-6868	Annual Report for 1963 Metallurgy Division (ANL-6868)	ANL-E, Frank G. Foote	1963
P1682S	ANL-667	Annual Report for 1962 Metallurgy division (ANL-667)	ANL-E, Frank G. Foote	1962
P1683S	ANL-94/15	Chemical Technology Division Annual Technical Report 1993 (ANL-94/15)	Chemical Technology Division	04/01/1994
P1684S	ANL-6516	Annual Report for 1961 Metallurgy Division (ANL-6516)	ANL-E, Frank G. Foote	1961
P1685S	ANL-5975	Annual Report for 1958 for 1958 Metallurgy Division (ANL-5975)		1958
P1686S	ANL-96/10	Chemical Technology Division (ANL-96/10)	ANL-E	06/01/1996
P1687S	ANL.90/11	Chemical Technology Division Annual Technical Report 1989 (ANL.90/11)	Chemical Technology Division	03/01/1990
P1688S	AE-P-039	Experiment Breeder Reactor-II (EBR-II) (AE-P-039)	INL	6/8/2000
P1689S	AE-P-040	Metal Cooled Reactors (AE-P-040)	Joseph Gonyeau	06/28/0199
P169A	N/A	Plutonium Isotopic Ratios at Rocky Flats. .	P. W. Krey and B. T. Krajewski; from Bob Meyer, Radiological Assessments Corporation, Ft. Collins, CO.	NOT DATED
P1690S	ANL-98/13	Chemical Technology Division Annual Technical Report 1997 (ANL-98/13)	Chemical Technology Division	06/01/1998
P1691S	SOP: ACL-181	Operation of Kicksort Alpha Spectrometers with Associated Ortec ADCAM and AST Personal Computer with Ortec Software for Isotopic Analysis of Environmental Samples by Alpha Spectrometry Using Isotope Dilution (SOP: ACL-181)	Lesa L Smith	03/06/1993
P1692S	AE-P-042	Application of Advanced Liquid Metal Reactors to the Destruction of Radioactive Wastes (AE-P-042)	Westinghouse Hanford Company, R. A. Karnesky	08/01/1991

Implementing Document: MP-TRUW-8.13

TRACKING NUMBER	DOCUMENT NUMBER	DOCUMENT TITLE/DESCRIPTION	DOCUMENT AUTHOR	DOCUMENT DATE
P1693S	AE-P-043	The Liquid metal Fast Breeder Reactor: Promises and Uncertainties (AE-P-043)	ANL-E, Energy Research and Development Administration,Comptroller General of the United States	07/31/1975
P1694S	AE-P-047	The Integral Fast Reactor - A Practical Approach to Waste Management (AE-P-047)	ANL-E, James J. Laidler	09/28/1993
P1695S	AE-P-048	Management of Transuranics Using the Integral Fast Reactor (IFR) Fuel Cycle (AE-P-048)	ANL-E, David C. Wade	01/23/1994
P1696S	AE-P-049	Safeguards Operations in the Integral Fast Reactor Fuel Cycle (AE-P-049)	ANL-E, ANL-W, Penn State University, K. Michael Goff	08/01/1994
P1697S	AE-P-050	Integral Fast Reactor (AE-P-050)	UC-Berkeley	06/07/2000
P1698S	Form TT-QP-013	ANL Environmental Management Operations (Form TT-QP-013)	Tom Krause	2/95-02/5/
P1699S	AE-P-051	Proliferation Resistance of the Fuel Cycle for the Integral Fast Reactor (AE-P-051)	ANL-E, Leslie Burns	09/12/1993
P170A	HS371	The Past 30 Years at Rocly Flats Plant. HS371. (HS371)		11/1/1982
P1700S	AE-P-052	Spacelift 2025 (AE-P-052)	ANL-E, Federation of American Scientists, Henry D. Baird	08/01/1996
P1701S	AE-P-053	Nuclear Thermal Propulsion (AE-P-053)	ANL-E, Federation of American Scientists	06/08/2000
P1702S	0	Chemical Technology Division Annual Technical Report 1998 (0)	Chemical Technology Division	07/01/1999
P1703S	0	Chemical Technology Division Annual Technical Report 1982 (0)	Chemical Technology Division	07/01/1983
P1704S	NBL-SP-U-12	Purification ot Uranium by Anion Exchange Separation (Mini Column) (NBL-SP-U-12)	Usha I. Narayanan	12/14/1999
P1705S	NBL-SP-U-(1)-1	Purification of Uranium for Mass Spectrometric Analysis (NBL-SP-U-(1)-1)	Alma V. Stiffin	12/14/1999
P1706S	NBL-SP-U(I)-4.	Purification of Uranium for Mass Spectrometric Analysis Using UITEVA-SPEC Columns (NBL-SP-U(I)-4.)	Iris W. Frank	12/14/1999
P1708S	NBL-SP-U,	Filament Degassing Procedure (Finnigan MAT 261) (NBL-SP-U,)	Anthony J. Traina	12/14/1999

Implementing Document: MP-TRUW-8.13

TRACKING NUMBER	DOCUMENT NUMBER	DOCUMENT TITLE/DESCRIPTION	DOCUMENT AUTHOR	DOCUMENT DATE
P1709S	NBL-SA-PP-2.1	Determination of Density with the Mettler/Paar DMA 46 Density Meter (NBL-SA-PP-2.1)	Khalida S.Scheideiman,	11/24/1999
P171A	RFP-4826, UC-721, DOE/OSTI-4500	Evaluation of Residue Drum Storage Safety Risks. RFP-4826, UC-721, DOE/OSTI-4500. (RFP-4826, UC-721, DOE/OSTI-4500)	William V. Conner. From Bill Conner, Los Alamos Programs Office.	6/17/1994
P1710S	CCP: AE-I-121, ACL-032	Determination of Uranium in Solids, Sediments, and Sludges (CCP: AE-I-121, ACL-032)	Alice M. Essling, Donald G. Graczyk	01/30/1987
P1711S	CCP: AE-I-122, SOP: ACL-030	Determining Isotopic Composition of Uranium or Plutonium by Thermal Ionization Mass Spectrometry (CCP: AE-I-122, SOP: ACL-030)	Florence P. Smith	12/12/1996
P1712S	CCP: AE-I-123, SOP: ACL-029	Determination of Uranium in Waters (CCP: AE-I-123, SOP: ACL-029)	Alice M. Essling	01/30/1987
P1713S	CCP: AE-I-124, SOP: ACL-031	Sample Preparation and Separation of Pu, Th, and Am from Solid (Soils, Sediments, Sweepings) and Liquid (Waters, Milk) Environmental Samples for Analysis by Alpha-Spectrometry (CCP: AE-I-124, SOP: ACL-031)	L. B. Gillis, F. Markin, L. L. Wetter	03/25/1993
P1714S	CCP: AE-I-125, SOP: ACL-090	Cleaning of Laboratory Glassware for Use in Sample Preparation for Environmental Radionuclides (CCP: AE-I-125, SOP: ACL-090)	Lynn B. Gillis	01/30/1987
P1715S	CCP: AE-I-126, SOP: ACL-130	Sample Preparation by Total Dissolution and Separation of Thorium, Plutonium, and Americium from Solid Environmental Samples for Analysis by Alpha-Spectrometry (CCP: AE-I-126, SOP: ACL-130)	Lesa L. Wetter	04/081988
P1716S	CCP: AE-I-127, SOP: ACL-146	Sample Preparation of Solid Environmental Samples for Analysis of Radionuclides (CCP: AE-I-127, SOP: ACL-146)	Lesa L. Wetter	07/05/1990
P1717S	CCP: AE-I-128, SOP: ACL-095	Standard Operating Procedure Gross Alpha and Beta Radioactivity (CCP: AE -I-128, SOP: ACL-095)	Richard B. Holtzman, W. Elane Streets	01/10/1992
P1718S	CCP: AE-I-194, Course JP99006	Venting Sealed Pouches and Other Primary Packages that Contain TRU Waste from Gloveboxes (e.g. Opening Closed Containers and Venting Sealed Pouches) (CCP: AE-I-194, Course JP99006)	ANL-E WMO	01/02/2001
P1719S	N/A	Waste Handling Procedures Manual	WMO Department	05/26/2000
P172A	SMU-404	Standard for Cylindrical HEPA Filters. SMU-404 Original Issue: February 1, 1974. (SMU-404)	Document Control, Rocky Flats.	9/24/1991
P1720S	CCP: AE-P-012	Waste Handling Procedures Manual (Chapter 1-4 and Section II) (CCP: AE-P -012)	WMO	07/01/1998

Implementing Document: MP-TRUW-8.13

TRACKING NUMBER	DOCUMENT NUMBER	DOCUMENT TITLE/DESCRIPTION	DOCUMENT AUTHOR	DOCUMENT DATE
P1721S	CCP: AE-P-013	Waste Management Handling Procedures Manual; Sections 11-13, Radioactive Wastes (CCP: AE-P-013)	Waste Management Operations Department	02/01/1994
P1722S	CCP: AE-P-014	Waste Management Handling Procedures Manual; Section 4, Waste Acceptance Quality Assurance Criteria (CCP: AE-P-014)	Waste Management Operations Department	08/01/1993
P1723S	CCP: AE-P-106, SAR: IPS-221-00-0	Alpha-Gamma Hot Cell Facility (AGHCF) Safety Analysis Report (CCP: AE-P-106, SAR: IPS-221-00-0)	ANL-E/Energy Technology Division	01/30/1998
P1724S	CCP: AE-I-076, DDP 5.9	Completed Checklists for DPP 5.9, "Contaminated Cooling Water System D&D" (CCP: AE-I-076, DDP 5.9)	Pitman, Carlson	10/25/1993
P1725S	CCP: AE-I-080, DPP 5.13	Completed Checklist for DPP 5.13, "Inert Particulate Solidification" (CCP: AE-I-080, DPP 5.13)	Earl Armand	04/07/1994
P1726S	CCP: AE-I-082. Checklists for DPP 5.15	Completed Checklists for DPP 5.15, "Silicon Oil and Grease Solidification" (CCP: AE-I-082. Checklists for DPP 5.15)	Armand, Wood	1994
P1727S	CCP: AE-I-083	Removal of Magnesium-Oxide from Building 212 Gloveboxes (CCP: AE-I-083)	Mitchell	02/24/1994
P1728S	NBL-SA-PP-2.1.	Determination of Density with the Mettler/Paar DMA 46 Density Meter (NBL-SA-PP-2.1.)	Khalida S. Scheideiman, New Brunswick Laboratory	11/24/1999
P1729S	IPS-2-00-00	AGHCF Operations Manual (IPS-2-00-00)	ANL-E	09/10/1990
P173A	SMU-401	Standard for HEPA Filters, General Purpose. SMU-401 (SMU-401)	Document Control, Rocky Flats.	10/1/1974
P1730S	P004	Safety Analysis Report for the Alpha-Gamma Hot Cell Facility (BLDG. 212) (P004)	ANL-E, W. D. Jackson	12/06/1982
P1731S	P006	Safety Analysis for Twenty Year Retrievalbe Storage of Intermediate Gamma Level Transuranic Waste (P006)	ANL-E, W. D. Jackson	06/01/1976
P1732A	P008	ANL-W History. Reactors (IFR) (P008)	ANL-E	07/23/2001
P1733S	P009	TRU-RH Waste Certification Plan for Waste Management Operations (P009)	ANL-E, Ralph W. Ditch and Gary E. Griffin	04/16/1991
P1734S	P010	Argonne News-About the People and Programs of Argonne National Laboratory (P010)	ANL-E	11/01/1985

Implementing Document: MP-TRUW-8.13

TRACKING NUMBER	DOCUMENT NUMBER	DOCUMENT TITLE/DESCRIPTION	DOCUMENT AUTHOR	DOCUMENT DATE
P1735S	P012	The Status of Uranium-Silicon Alloy Fuel Development for the RERTR Program (P012)	ANL-E, R. F. Domagala, T. C. Wiencek, H. R. Thresh and D. Stahl;	11/01/1980
P1736S	P013	Research Highlights 1946-1996 (P013)	ANL-E	01/01/1996
P1737S	P016	Liquid Metal Fast Breeder: Right Answer, Wrong Question (P016)	ANL-E/ Atomic Energy Insight, http://www.atomicinsights.com	10/1/1995
P1738S	ANL/CMT/CP-93028	Retention of Neptunium in Uranyl Alteration Phases Formed During Spent Fuel Corrosion (ANL/CMT/CP-93028)	E.C. Beck, R.J. Finch, P.A. Finn, J.K.Bates	09/22/1997
P1739S	P017	Congressional Hearings Intelligence and Security: Naval Reactors, Arms Control, Office of Inteligence, Question and Answer (P017)	ANL-E/ Reactors, Arms Control, Office of Inteligence	03/11/1992
P174A	N/A	Building 374 Evaporator Feed Streams. WASTREN, Inc.	WASTREN, Inc.	4/1/1992
P1740S	P023	Argonne National Laboratory-East Remote Handled Waste (P023)	ANL-E, W. Mahlon Heilseson	08/29/1994
P1741S	P025	Argonne National Laboratory-East, Transuranic Waste Acceptable Knowledge Report (P025)	ANL-E	09/29/2000
P1742S	P027	Preliminary Engineering Proposal on Alpha-Gamma Hot Laboratory for Fuels Technology Center, Argonne' Naltional Laboratory (P027)	ANL-E/The University of Chicago	06/01/1958
P1743S	P028	Presentaion to DOE Office of Nuclear Safety re: Alpha-Gamma Hot Cell Facility (AGHCF) (P028)	ANL-E	07/19/1993
P1744S	ANLICMP/CP·93030	Corrosion Mechanisms of Spent Fuel Under Oxidizing Conditions (ANLICMP/CP·93030)	P, A. Finn, R. Finch, E. Buck, and J. Bates	10/2411997
P1745S	P029	Engineering Test Plan for the Irradiation Testing of U3S1 Dispersion Fuels: Reduced Enrichment Research and Test Reactor Program (P029)	ANL-E, R. F. Mattas	06/01/1980
P1746S	ANL/CMT/CP·79779	Elements Present in Leach Solutions from Unsaturated Spent Fuel Tests (ANL/CMT/CP·79779)	P. A Finn, J. K. Bates, J. C. Hoh, J. W. Emery, L. D. Hafenrichter, E. C. Buck, and M. Gong	11/29/1993
P1747S	ANL/CMT/CP·96766	Oxidative Corrosion of Spent U02 Fuel in Vapor and Dripping Groundwater at 90C (ANL/CMT/CP·96766)	Robert J. Finch, Edgar C. Buck, Patricia A. Finn, and John K. Bates	09/28/1999
P1748S	P031	Alpha-Gamma Hot Cell Facility (AGHCF) Safety Analysis Report (P031)	ANL-E, A. B. Cohen	01/01/1998

Implementing Document: MP-TRUW-8.13

TRACKING NUMBER	DOCUMENT NUMBER	DOCUMENT TITLE/DESCRIPTION	DOCUMENT AUTHOR	DOCUMENT DATE
P1749S	ANL/CMT/CP-89579	Corroded Spent Nuclear Fuel Examined with EELS (ANL/CMT/CP-89579)	Edgar C. Buck, Nancy L. Dietz, and John K. Bates	07/18/1996
P175A	87-RF-1817	Conceptual Design Report – Plutonium Recovery Project. Volume II Part 3 – Technical Appendix: Specifications and Drawings. 87-RF-1817 (87-RF-1817)	Source: Vivian Sandalweek, RFETS, x8278	3/16/1987
P1750S	P032	Procedure for Sorting Remote-Handled TRU Waste (30-Gallon Intermediate-Level Waste (P032)	ANL-E	1/7/1987
P1751S	P034	AGHCF Operations Manual: 15.6 Procedure for Acid Cleaning a Zinc-Bromide Shielding Window (P034)	ANL-E, W. C. Kettman	04/16/1996
P1752S	P035	AGHCF Operations Manual: 15.9 Procedure for Installing Vents in Pre-packaged 30-gal. TRU Waste Drums (P035)	ANL-E	07/24/1990
P1753S	N/A	Corrosion Tests of LWR Fuels - Nuclide Release	P.A. Finn, Y. Tsai, and J. C. Cunnane,	11/26/2001
P1754S	P038	AGHCF Operations Manual: 15.13 Procedure for Installing a Modified 0-301 Window Tank in a Type A Window Cavity (P038)	ANL-EDennis A. Donahue	12/07/1990
P1755S	P039	Operations Manual: 15.15 Procedure for Installing Lead Shielding Around a Tank Insert in an AGHCF Window Cavity (P039)	ANL-E	02/01/1991
P1756S	P040	Final Safety Analysis Report for Building 332, increment III. (P040)	Odellk, B. N and A. J. Troy	08/31/1977
P1757S	ANL/CMT/CP·102400	Corrosion Testing of Spent Nuclear Fuel Performed at Argonne National laboratory for Repository Acceptance (ANL/CMT/CP·102400)	Margaret M. Goldberg	08/04/2000
P1758S	ANL/CMT/CP-103284,	1-129 Release Fractions in Unsaturated Tests with Fast-Flux MOX Fuels (ANL/CMT/CP-103284,)	P.A. Finn, Y. Tsai, M. M. Goldberg, and R. V. Strain	12/08/2000
P1759A	P051	AGHCF Operations Manual: 11.0 Waste Management (P051)	ANL-E	10/23/1996
P176A	SRM-012-022	Project Plan for Inspection, Sampling, and Characterization of Solid Residues. SRM-012-022 (SRM-012-022)	Karen Phillips, SSOC.	12/13/1995
P1760S	P052	Test and Evaluation Document for the US DOT Specification 7A Type A Packaging (P052)	ANL-E	No Date
P1761S	P055	Waste Handling Procedures (P055)	ANL-E, C. L. Cheever	09/18/1986
P1762S	P059	AGHCF Operations Manual: Section VII- Examination Procedures (P059)	ANL-E	02/20/1973

Implementing Document: MP-TRUW-8.13

TRACKING NUMBER	DOCUMENT NUMBER	DOCUMENT TITLE/DESCRIPTION	DOCUMENT AUTHOR	DOCUMENT DATE
P1763S	P060	AGHCF Operations Manual: 7.0 Standard Examination Procedures (P060)	ANL-E	06/20/1989
P1765S	P062	AGHCF Operations Manual: 7.15 Preparation of Metallographic Specimens (P062)	ANL-E	06/20/1989
P1766S	P068	AGHCF Operations Manual: 7.14 Mounting Metallographic Specimens (P068)	ANL-E	03/29/1990
P1767S	P069	AGHCF Operations Manual: 7.13 Fuel Element Sectioning (P069)	ANL-E	03/29/1990
P1768S	P070	AGHCF Operations Manual: 7.21 Specimen Density by Immersion (P070)	ANL-E	06/20/1989
P1769S	ANL/CMT/CP-98274,	Measurement Techniques in Dry-Powdered Processing of Spent Nuclear Fuels (ANL/CMT/CP-98274,)	Stephen F. Wolf, Delbert L. Bowers, and Paul J. Persiani	10/13/1999
P177A	Task 2 Final Report	(Task 2 Final Report) Selection of the Chemicals and Radionuclides of Concern. ChemRisk. (Task 2 Final Report)	ChemRisk. Copy obtained from CDPHE.	
P1770A	ANL-00/16, ISBN 0-967168-1-X,	From Test Tube to Pilot Plant; A 50 Year History of the Chemical Technology Division at Argonne National Laboratory (ANL-00/16, ISBN 0-967168-1-X,)		08/01/2000
P1771S	NOD-181-00-00	Nuclear Operations Deactivation, Decommissioning, and Demolition Program: Activity-Specific Safety Analysis for Building 205 K-Wing Hot Cell Liquid Processing (NOD-181-00-00)	B. Voelz	06/26/2009
P1772S	1001558	Design, Operation, and performance Data for high Burnup PWR fuel from the H.B. Robinson Plant for use in the NRC Experimental Progarm at Argonne National Laboroatory (1001558)	ANL-E	05/01/2001
P1773S	P2029	AQUEOUS DISSOLUTION OF URANIA-THORIA NUCLEAR FUEL (P2029)	ANL-E, PAUL A. DEMKOWICZ, JAMES L. JERDEN, Jr., and JAMES C. CUNNANE, NORIKO SHIBUYA and RONALD BANEY, JAMES TULENKO,	07/01/2004
P1774S	INEEL/EXT-02-01411	Advanced Proliferation Resistant, Lower Cost, Uranium-Thorium Dioxide Fuels for Light Water Reactors Nuclear Energy Research Initiative Project 99-0153 Progress Report for Work through September, 2002, 12th Quarterly Report and 3rd Annual Report 6/6/10 (INEEL/EXT-02-01411)	Idaho National Engineering and Environmental Laboratory (INEEL), Philip E. MacDonald	9/1/2002 a

Implementing Document: MP-TRUW-8.13

TRACKING NUMBER	DOCUMENT NUMBER	DOCUMENT TITLE/DESCRIPTION	DOCUMENT AUTHOR	DOCUMENT DATE
P1775S	NOD-162-00-01	Nuclear Operations Deactivation, Decommissioning, and Demolition Program: Appendix B: Building 205 K-Wing Hot Cell Deactivation Project Plan (NOD-162-00-01)	D. Hodge	03/05/2009
P1776S	NOD-205K-OPS-300	K-Wing Senior Cave Operations (NOD-205K-OPS-300)	ANL-E, V. Sullivan	03/10/2008
P1777S	NOD-190-00-00, 191-00-00, 192-00-00, and 194-00-00	Building 212 Alpha Gamma Hot Cell Facility Deactivation Project Plan with Appendix 1, 2,and 3 (NOD-190-00-00, 191-00-00, 192-00-00, and 194-00-00)	ANL-E, D. Pancake, M. Sodaro, D. Hodge	Various da
P1778S	NOD-155-00-00	Revised Estimate of the Radioactive Inventory in the AGHCF (NOD-155-00-00)	ANL-E, R.J. Page	01/07/2009
P1779S	NOD-184-00-00	Nuclear Operations Deactivation, Decommissioning, and Demolition Program: Activity- Specific Safety Analysis for Building 205 K-Wing Cell A & B Material Sorting, Size Reduction, and Transfer (NOD-184-00-00)	B. Voelz	07/09/2009
P178A	RFP-1311-A	Research and Development Quarterly Progress Report. October, November, and December 1968. RFP-1311-A (RFP-1311-A)	BBWI Document Control	1/31/1969
P1780S	P2034	Fuels for Sodium-Cooled Fast Reactors: US Perspective; article in Journal of Nuclear Materials (P2034)	ANL-E, D.C. Crawford, D.L. Porter, S.L. Hayes	05/10/2007
P1781S	WCP-09•205K-005	NUCLEAR OPERATIONS DIVISION WORK CLEARANCE PERMIT: 205 K-Wing Hot Cell Liquids Processing (WCP-09•205K-005)	D. Hodge	06/25/2009
P1782S	MSDS No. 228	Material Safety Data Sheet (MSDS) for Radiak decontamination solution. (MSDS No. 228)	Uni-Chem Chemicals Inc.	05/01/2003
P1783S	WCP-09•205K•009	NUCLEAR OPERATIONS DIVISION WORK CLEARANCE PERMIT: 205 K Wing Cell A & 8 Material Sorting, Size Reduction & Transfer (WCP-09•205K•009)	D. Hodge	07/13//200
P1784S	IPS-362-00-00	Work Plan for Oxidizing Zircaloy Cladding Samples for the Zn-Zircaloy Interaction Study Memo to IPS Document File (IPS-362-00-00)	ANL-E, Hanchung Tsai	09/25/2000
P1785S	P344	Analysis of Spent Nuclear Fuel Sample AJG 57482 (Limerick Reactor) to Determine Selected Isotopes and Estimate Fuel 8urnup (P344)	ANL-E, D. G. Graczyk	04/01/2003
P1787S	P358	Procedure for Changing the Glove Rings in the Glove Niche: 00 No. 42 (P358)	ANL-E, A. B. Cohen	03/15/1995

Implementing Document: MP-TRUW-8.13

TRACKING NUMBER	DOCUMENT NUMBER	DOCUMENT TITLE/DESCRIPTION	DOCUMENT AUTHOR	DOCUMENT DATE
P1788S	RHO-RE-ST--31P	Review of Zirconium-Zircaloy Pyrophoricity (RHO-RE-ST--31P)	ANL-E, Thurman D. Cooper,	11/01/1984
P1789S	ANL/NT/CP-103306	Metallographic Analysis of irradiated RERTR.3 Fuel Test Specimens (ANL/NT/CP-103306)	ANL-E, Meyer, Hofman, Strain, Clark, and Stuart	10/06/2001
P179A	RFP-1406-A	Research and Development Quarterly Progress Report. April, May, and June 1969. RFP-1406-A (RFP-1406-A)	Rocky Flats Library (BBWI Document Control)	1989
P1790S	ANL/TD/CP.97495	The RERTR Program: A Status Report (ANL/TD/CP.97495)	ANL-E, A. Travelli	09/28/1999
P1791S	N/A	Waste Handling Procedures Manual	N/A	08/29/2009
P1792S	ANL/TD/CP-100128	Progress of the RERTR Program in 1999 (ANL/TD/CP-100128)	ANL-E, A. Travelli	01/18/2000
P1793S	HFS-003	Argonne National Laboratory-East Building 212 Energy Technology Division Alpha-Gamma Hot Cell Facility Preliminary Decontamination and Decommissioning Plan (HFS-003)	ANL-E, T. S. Bray	10/08/2003
P1794A	P379	Design Basis Threat Impact Assessment and Implementation Plan for the Argonne Ilinoiis Site (P379)	ANL-E	12/19/2003
P1795S	NOD-205K-NSB-201	Basis of Interim Operations for Building 205 K-Wing Deactivation (NOD-205K -NSB-201)	C. A. Sprain	08/29/2008
P1796S	IPS-6-01-10,	AGHCF Criticality Hazards Control Statement, Use of a Safe Vac Vacuum Cleaner in Alpha-Gamma Hot Cell Facility Areas 1 and 3, (IPS-6-01-10,)	Richard Lell	10/23/2002
P1797S	IPS.311.00.00, Supplemental Instruction SI 197, Su	CRIEPI Post tensile SEM Fractography, Supplemental Instruction SI 197 for Rod/Specimen 583D1 (S1T4), 583E1 (S1T5) in accordance with IPS-311-00-00. (IPS.311.00.00, Supplemental Instruction SI 197, Su)	H. Tsai	07/13/2001
P1798S	IPS-295-00-00,	AGHCF Supplemental Instructions for IRIS-II, A/G 558 in accordance with IPS-295-00-00 (IPS-295-00-00,)	L. A. Neimark	12/01/1998
P1799S	IPS.2.04-00 and IPS-2.04-01.	Procedures for Conducting Tests in the Whole-Pin furnace System (IPS.2.04-00 and IPS-2.04-01.)	L. A. Neimark	1990
P180A	RFP-1436-A	Research and Development Quarterly Progress Report. July, August, and September 1969. RFP-1436-A. (RFP-1436-A)	Rocky Flats Library.	10/31/1969
P1800S	HFS-015-00-00,	Work Plan for the Preparation of Fuel Rods for Return Shipment to Idaho (HFS-015-00-00,)	L. A. Neimark	12/08/2004

Implementing Document: MP-TRUW-8.13

TRACKING NUMBER	DOCUMENT NUMBER	DOCUMENT TITLE/DESCRIPTION	DOCUMENT AUTHOR	DOCUMENT DATE
P1801S	HFS-014-00-00,	Work Plan for the Replacement of the Area 3 GM Manipulator Power Cord (HFS-014-00-00,)	K. Stoll, Asst. Manager, HFS	10/12/2004
P1802S	HFS-011-00-00	AGHCF Special Nuclear material Inventory Management Plan (HFS-011-00-00)	ANL-E	02106/2004
P1803S	HFS-O12-00-01	ET-PFS Facility Support Agreement (HFS-O12-00-01)	ANL-E	03/01/2004
P1804S		Revised Work Plan for the Examination of Fuel Plates from the RERTR-5 Experiment in ATR ()	R. V. Strain	04/12/2001
P1805S	ANL ID 29331	Recent Observations at the Postirradiation Examination of Low-Enriched U-Mo Miniplates Irradiated to High Burnup (ANL ID 29331)	G. L. Hofman; Y. S. Kim; M. R. Finaly; J. L. Snelgrove; S. L. Hayes; M. K. Meyer; and C. R. Clark	10/05/2003
P1806S		Revised Work Plan for th Examination of Fuel Plates from the RERTR-4 Experiment in ATR ()	R. V. Strain	N/A
P1807S	AGHCFOPS-303	30 gallon Remotely Handled Transuranic Waste Drum Assembly (AGHCFOPS-303)	ANL	01/19/2001
P1808S	AGHCFOPS-304	Estimation of Activity in Waste Containers (AGHCFOPS-304)	ANL	04/20/2001
P1809S	AGHCFOPS-305	RH-TRU 30-gal Waste Drum Outloading (AGHCFOPS-305)	ANL	06/07/2002
P181A	RFP-1519-A	Research and Development Quarterly Progress Report. January, February, and March 1970. RFP-1519-A (RFP-1519-A)	Rocky Flats Library	4/30/1970
P1810S		Chemical and Other Regulated Waste Management ()	ANL	10/31/2001
P1811S		Electron Beam laboratory User's Guide ()	ANL	06/11/2001
P1812S		Changing an In-line Filter in a Radioactive Gas Collective System ()	ANL	01/31/2001
P1813S	AGHCF-MAINT-200	Alpha-Gamma Hot Cell Facility Operations Manual. ANL-E Energy Technology, Irradiation Performance Section. Removing Master Manipulator at Work Station 5. (AGHCF-MAINT-200)	N/A	01/31/2001
P1814S	AGHCF-MAINT-201	Removal and Installation of Model A Slave Manipulators (AGHCF-MAINT-201)	ANL	01/19/2001
P1815S	AGHCF-MAINT-300	Changing Glove Rings in AGHCF Glove Niche (AGHCF-MAINT-300)	ANL	01/31/2001
P1816S		Remote Handled Transuranic Waste Sorting and Packaging ()	ANL	07/09/2001

Implementing Document: MP-TRUW-8.13

TRACKING NUMBER	DOCUMENT NUMBER	DOCUMENT TITLE/DESCRIPTION	DOCUMENT AUTHOR	DOCUMENT DATE
P1817S	IPS-316-00-00	Specification for Plastic Tunnel Suit, Alpha-Gamma Hot Cell Facility (IPS-316 -00-00)	ANL-E, Terri Bray	08/12/1999
P1818S	P520	Work Plan for the Examination of Fuel Nano-plates from the RERTR-3 Experiment in ATR (P520)	ANL-E, R. V. Strain	01/20/2000
P1819A	DOE/TRU-12-3425	ANNUAL TRANSURANIC WASTE INVENTORY REPORT – 2012 (DOE/TRU-12-3425)	U.S. Department of Energy, Carlsbad Field Office	10/01/2012
P182A	RFP-1569-A	Research and Development Quarterly Progress Report. April, May, and June 1970. RFP-1569-A. (RFP-1569-A)	Held at BBWI Document Control	9/16/1970
P1820S	EDF-0295	AJR WMF-635 Drum Re-overpacking Facility Operations (EDF-0295)	Tom Bingham, Radiological Engineer	01/16/2013
P1821A	LA-MIN02-V.001	Form-1900, AMWTP Offsite Waste Stream Profile for Profile ID. No. LA-MIN02-V.001 (LA-MIN02-V.001)	Jim Vernon	01/14/2013
P1823A	Form-1900	AMWTP Offsite Waste Stream Profile, Form-1900 (Form-1900)	AMWTP, Off-site Waste Program	12/13/2012
P1824S	DOE/ID-10780	Idaho Nuclear Technology and Engineering Center, Sodium-Bearing Waste – Waste-Incidental-to-Reprocessing Determination Report (DOE/ID-10780)	BBWI	08/01/2002
P1825A	RPT-TRUW-89	Acceptable Knowledge Baseline Document for Argonne National Laboratory-East Waste, RPT-TRUW-89 (RPT-TRUW-89)	AMWTP	05/08/2012
P1826A	RPT-TRUW-91	Acceptable Knowledge Document for Pre-1980 INL-Exhumed SDA Waste, RPT-TRUW-91 (RPT-TRUW-91)	AMWTP	02/14/2013
P1827A	RPT-ESH-079	Advanced Mixed Waste Treatment Facility Box Line PCB Management Plan (RPT-ESH-079)	AMWTP	10/31/2012
P1828A	EDF-0768	Engineering Design File 0768 (EDF-0768) Analysis of Using Supercompaction as Treatment for the Building/System No.: Removal of Liquids and Rupture of Aerosol Cans (EDF-0768)	AMWTP, John Godak	01/06/2013
P1829A	EDF-0783	Engineering Design File 0783 (EDF-0783) Deflagration Analysis of Aerosol Can Propellant in the Supercompactor Glovebox (EDF-0783)	AMWTP, David K. Young	11/14/2012
P183A	RFP-1602-A	Research and Development Quarterly Progress Report. July, August, and September 1970 (RFP-1602-A)	M. A. Thompson, et al.	10/30/1970

Implementing Document: MP-TRUW-8.13

TRACKING NUMBER	DOCUMENT NUMBER	DOCUMENT TITLE/DESCRIPTION	DOCUMENT AUTHOR	DOCUMENT DATE
P1830A	EDF-0775	Engineering and Design File 0775 (EDF-0775) Mixed Low Level Waste Debris Characterization (EDF-0775)	AMWTP, Julie Collins	06/27/2012
P1831S	MSDS-779	Material Safety Data Sheet for Clorox® Disinfecting Wipes (MSDS-779) (MSDS-779)	Lab Safety Supply, Inc.,	05/18/2001
P1832S	MSDS-988	Material Safety Data Sheet for Soil-Sement® (MSDS-988) (MSDS-988)	The Clorox Company	09/01/1999
P1833A	RPT-028	Engineering Study for the Treatment of Offsite Waste at the AMWTP (RPT-028)	AMWTP	09/30/2009
P1834A	RPT-PEP-01	RPT-Project Execution Plan (PEP)-01 (RPT-PEP-01)	AMWTP	09/13/2012
P1835S	NST-OI-80	INST-OI-80, Unpacking Overpack Containers (NST-OI-80)	AMWTP	06/15/2009
P1836S	INST-FOI-22	INST-FOI-22, Visual Examination of S3000 Waste in the Facility (INST-FOI-22)	AMWTP	08/11/2011
P1837S	INST-FOI-39	INST-FOI-39, Processing Sludge Drums in the South Box Line (INST-FOI-39)	AMWTP	08/16/2011
P1838S	INST-OI-41	INST-OI-41, Real-Time Radiography Operations (Box) (INST-OI-41)	AMWTP	12/12/2012
P1839A	CCP-AK-LANL-006	CCP-AK-LANL-006, Central Characterization Program Acceptable Knowledge Summary Report For LOS ALAMOS NATIONAL LABORATORY, TA-55 MIXED TRANSURANIC WASTE, WASTE STREAMS: LA-MHD01.001, LA-CIN01.001, LA-MIN02-V.001, LA-MIN04-S.001 (CCP-AK-LANL-006)	CCP	11/10/2014
P184A	RFP-1638-A	Research and Development Quarterly Progress Report. October, November, and December 1970 (RFP-1638-A)	Rocky flats	1/31/1971
P1840A	CCP-AK-LANL-009	CCP-AK-LANL-009, Central Characterization Project Acceptable Knowledge Summary Report For LOS ALAMOS NATIONAL LABORATORY CHEMISTRY AND METALLURGY RESEARCH (CMR) FACILITY WASTE STREAMS: LA-MHD03.001, LA-CIN03.001 (CCP-AK-LANL-009)	CCP	02/07/2012
P1841A	CCP-AK-LANL-010	CCP-AK-LANL-010, Central Characterization Program Acceptable Knowledge Summary Report For LOS ALAMOS NATIONAL LABORATORY TA-21 DP WEST FACILITY WASTE STREAMS: LA-MHD04.001, LA-MSG04.001 (CCP-AK-LANL-010)	CCP	02/14/2013

Implementing Document: MP-TRUW-8.13

TRACKING NUMBER	DOCUMENT NUMBER	DOCUMENT TITLE/DESCRIPTION	DOCUMENT AUTHOR	DOCUMENT DATE
P1842A	CCP-AK-LANL-004	Central Characterization Program Acceptable Knowledge Summary Report For LOS ALAMOS NATIONAL LABORATORY TA-50 MIXED TRANSURANIC WASTE WASTE STREAMS: LA-MIN03-NC.001, LA-CIN02.001, LA-MHD09.001 (CCP-AK-LANL-004)	CCP	04/08/2002
P1843A	CCP-AK-LANL-004	Central Characterization Program Acceptable Knowledge Summary Report For LOS ALAMOS NATIONAL LABORATORY TA-50 MIXED TRANSURANIC WASTE WASTE STREAMS: LA-MIN03-NC.001, LA-CIN02.001, LA-MHD09.001 (CCP-AK-LANL-004)	CCP	11/28/2011
P1844S	N/A	IDAHO NATIONAL LABORATORY: Auxiliary (originally Army) Reactor Area	http://www.globalsecurity.org/wmd/facility/idaho_inel-facility-ara.htm	07/24/2011
P1845S	DOE/ID-10381	INEL Reusable Property, Recyclable Materials, and Waste Acceptance Criteria: RRWAC (DOE/ID-10381)	Idaho National Engineering Laboratory	10/10/1995
P1846S	INST	INST-OI-114, Liquid Remediation For Inorganic Sludges (INST)	AMWTP	01/31/2013
P1847S	ICP-1042-II	A Survey of NRTS Waste Management Practices: Volume II (ICP-1042-II)	G.W. Hogg, W.F. Holcomb, L.T. Lakey, L.H. Jones, D.D. Coward	09/01/1971
P1848S	NA	Waste Reduction Operations Complex (NA)	http://www.globalsecurity.org/wmd/facility/idaho_inel-facility-wroc.htm	07/24/2011
P1849S	INST-TOI-15	INST-TOI-15, Large Item Disposal into BR-90 Box (INST-TOI-15)	AMWTP	TBD
P185A		Research and Development Quarterly Progress Report. January, February, and March 1971. RFP-1691-A.	From Rocky Flats Library	4/30/1971
P1850S	INST-OI-65	INST-OI-65, Standard Waste Box Direct Loading (INST-OI-65)	AMWTP	05/15/2013
P1851A	RPT-TRUW-93	RPT-TRUW-93, Acceptable Knowledge Document for Los Alamos National Laboratory Debris Waste (RPT-TRUW-93)	AMWTP	05/09/2013
P1852A	LA-MHD01.001	Central Characterization Project (CCP) Waste Stream Profile Form for LA-MHD01.001 (LA-MHD01.001)	Central Characterization Project (CCP)	05/22/2013
P1853A	LA-MHD03.001	Central Characterization Project (CCP)LANL WSPF LA-MHD03.001 with applicable change notices (LA-MHD03.001)	CCP	various

Implementing Document: MP-TRUW-8.13

TRACKING NUMBER	DOCUMENT NUMBER	DOCUMENT TITLE/DESCRIPTION	DOCUMENT AUTHOR	DOCUMENT DATE
P1854A	LA-MHD04.001	Central Characterization Project(CCP)LANL WSPF LA-MHD04.001 (LA-MHD04.001)	CCP	05/13/2008
P1855A	LA-MHD09.001	Central Characterization Project (CCP)LANL WSPF LA-MHD09.001 (LA-MHD09.001)	CCP	08/01/2011
P1856A	LANL WSPF LA-MHD03.002	LANL WSPF LA-MHD03.002 for RH-wastes (LANL WSPF LA-MHD03.002)	CCP	05/20/2020
P1857S	INST-OI-15	Box Assay Operations (INST-OI-15)	AMWTP	04/05/2013
P1858S	EGG-WM-9507	Sampling and Analysis Results for the Auxiliary Reactor Area-III Facility (EGG-WM-9507)	C.K. Hardy and S.L. Pickett	02/08/1991
P1859A	IDO-17190	Final Disassembly and Examination of the ML-1 Reactor Core (IDO-17190)	T.L. Murphy, D.R. Schuyler, and W.L. Clarke, Jr.	06/01/1966
P186A	RFP-1748-A	Research and Development Quarterly Progress Report. April, May, and June 1971 (RFP-1748-A)	Milton A. Thompson	7/30/1971
P1860S	EGG-WM-6875	Installation Assessment Report for EG&G Idaho, Inc., Operations at the Idaho National Laboratory (EGG-WM-6875)	EG&G Idaho, Inc.	01/01/1986
P1861S	IDO-10805	Idaho National Engineering and Environmental Laboratory Hazardous Waste Determination Record for the ARA-I Building ARA-626 Hot Cells 1 and 2 Concrete Floor and Soils Beneath the Floors (IDO-10805)	INEEL	04/22/1999
P1862S	INEL/INT-97-00438	Limited Scope and Hazard Characterization Plan for Decontamination and Dismantlement of the ARA-I Facility (INEL/INT-97-00438)	L.A. Wilson	05/01/1997
P1863S	https://idahocleanupproject.com/Progress/PBF/tabid	Power Burst Facility (PBF) (https://idahocleanupproject.com/Progress/PBF/tabid)	Idaho Cleanup Project	01/01/2012
P1864A	ERDA-1536	Final Environmental Impact Statement; Waste Management Operations; Idaho National Engineering Laboratory, Idaho (ERDA-1536)	Energy Research and Development Administration	09/01/1977
P1865S	ICP/EXT-04-00729	Defense-Related Waste Determination for Legacy Transuranic Waste at the Idaho National Laboratory Test Reactor Area Warm and Hot Waste Systems (ICP/EXT-04-00729)	Idaho Completion Project	04/01/2005
P1866S	INL/EXT-06-01185; HAER No. ID-33-G	Historical American Engineering Record; Idaho National Engineering Laboratory Test Reactor Area: Materials Testing and Engineering Test Reactors (INL/EXT-06-01185; HAER No. ID-33-G)	Hollie K. Gilbert and Susan M. Stacy	03/01/2006
P1867S	OMM-7.11	TRA Outer Area Operating and Maintenance Manual (OMM-7.11)	EG&G	03/29/1982

Implementing Document: MP-TRUW-8.13

TRACKING NUMBER	DOCUMENT NUMBER	DOCUMENT TITLE/DESCRIPTION	DOCUMENT AUTHOR	DOCUMENT DATE
P1868S	INEEL/EXT-04-02536; HAER No. ID -33-E	Historical American Engineering Record – Idaho National Engineering and Environmental Laboratory – Test Area North, HAER No. ID-33-E (INEEL/EXT -04-02536; HAER No. ID-33-E)	Susan M. Stacy	02/01/2005
P1869S	https://idahocleanupproject.com/Progress/TAN/tabid	Test Area North (TAN) (https://idahocleanupproject.com/Progress/TAN/tabid)	Idaho Cleanup Project	01/01/2012
P187A	RFP-1790-A	Research and Development Quarterly Progress Report. July, August, and September 1971. (RFP-1790-A)	Milton A. Thompson	10/29/1971
P1870S	NA	Materials Testing Reactor operated by Idaho Nuclear Corporation for Idaho Operations Office USAEC (NA)	U.S. Atomic Energy Commission	Not dated
P1871S	INEL-069-18	National Reactor Testing Station (INEL-069-18)	U.S. Atomic Energy Commission	07/01/1967
P1872S	INEL-95/0225	Actinide Partitioning from Actual ICPP Dissolved Zirconium Calcine Using the TRUEX Solvent (INEL-95/0225)	K.N. Brewer, R.S. Herbst, T.J. Tranter, J.D. Law, T.G. Garn, and T.A. Todd	05/01/1995
P1873S	UC-70; ICP-1094; TID-4500; R-64	Isotope Dilution Analysis of Picogram Quantities of Pu, Am, and Cm in Nuclear Fuel Processing Plant Waste Streams (UC-70; ICP-1094; TID-4500; R-64)	J.D. Baker and L.D. McIsaac	06/01/1976
P1874S	INL/EXT-06-11969; HAER No. ID-33 -H	Historic American Engineering Record, Idaho National Laboratory, Idaho Chemical Processing Plant, Fuel Reprocessing Complex (INL/EXT-06-11969; HAER No. ID-33-H)	Susan Stacy and Julie Braun	12/01/2006
P1875S	DOE/ID-10823	HWMA/RCRA Tank System Closure Plan for the Test Reactor Area Catch Tank System (TRA-630); Voluntary Consent Order Action Plan VCO-5.8.d (DOE/ID-10823)	Idaho National Engineering and Environmental Laboratory, Voluntary Consent Order Program	03/01/2005
P1876S	CI #1064	Materials Testing Reactor Operating Manual, Volume III, Contaminated Air Effluent and Water Disposal Systems (CI #1064)	R.G. Ambrosek and A.L. Kologi	10/01/1967
P1877S	INEEL/EXT-2000-0801	System Identification for the Test Reactor Area Catch Tank System (TRA-630), Voluntary Consent Order Action Plan VCO-5.8.d (INEEL/EXT-2000-0801)	Idaho National Engineering and Environmental Laboratory; Voluntary Consent Order Program	03/01/2005

Implementing Document: MP-TRUW-8.13

TRACKING NUMBER	DOCUMENT NUMBER	DOCUMENT TITLE/DESCRIPTION	DOCUMENT AUTHOR	DOCUMENT DATE
P1878S	INEEL/EXT-2000-00037	Voluntary Consent Order, SITE-TANK-005 System Identification, TRA/MTR Warm Waste System (TRA-007), Book 3-TRA, Volume I (INEEL/EXT-2000-00037)	Idaho National Engineering and Environemntal Laboratory, Voluntary Consent Order Program	09/01/2001
P1879A	EDF-6329	Source Term Determination for the TRA-635 and RTC Laboratories Drain Lines (EDF-6329)	D.L. Georgeson	12/19/2005
P188A	RFP-1837-A	Research and Ecology Annual Report, Chemistry Research and Development. (RFP-1837-A)	M. A. Thompson	4/14/1972
P1880S	ICP/EXT-04-00320	Amended System Identification for the Test Reactor Area Catch Tank System (TRA-630) Voluntary Consent Order Action Plan VCO-5.8.d (ICP/EXT-04-00320)	Idaho Completion Project	11/01/2004
P1881S	EDF-6244	Materials Test Reactor Complex Chemical Constituent Source Team (EDF-6244)	Walker F. Howell	07/11/2007
P1882S	DOE/ID-10832	Waste-Incidental-to-Reprocessing (WIR) Citation Determination Report for Contaminated Job Waste at the Idaho Nuclear Technology and Engineering Center (INTEC) (DOE/ID-10832)	N/A	10/01/2001
P1883S	WVDP-RFI-016	Material Safety Data Sheet for Turco Decon 4324 (WVDP-RFI-016)	TURCO PRODUCTS, INC.	07/13/1992
P1884S	AEDL-619	Engineering Design File, TRA Rad Waste System Modifications, TRA Hot Cell and Alpha Lab Effluent (AEDL-619)	Vondell Balls, Ed Anderson, Jr., Thomas Hipp	05/15/1997
P1885S	WVDP-RFI-016	Material Safety Data Sheet for Turco Decon 4502 (WVDP-RFI-016)	TURCO PRODUCTS, INC.	07/13/1992
P1886S	DOE/ID-11397	Engineering Evaluation/Cost Analysis for Decommissioning of the TRA-632 Hot Cells (DOE/ID-11397)	U.S. Department of Energy, DOE-ID Operations Office	09/01/2009
P1887S	WVDP-RFI-016	Material Safety Data Sheet for Turco Decon 4521 (WVDP-RFI-016)	TURCO PRODUCTS, INC.	03/31/1994
P1888S	N/A	Material Safety Data Sheet for Tap Magic Original Cutting Fluid	The Steco Corporation	08/09/2006
P1889S	DOE/NE-ID-11226	Basis for Section 3116 Determination for the Idaho Nuclear Technology and Engineering Center Tank Farm Facility (DOE/NE-ID-11226)	INTEC	11/01/2006
P189A	RFP-1921-A	Research and Ecology Semi-Annual Progress Report. January-July 1972 (RFP-1921-A)	M. A. Thompson	8/30/1972

Implementing Document: MP-TRUW-8.13

TRACKING NUMBER	DOCUMENT NUMBER	DOCUMENT TITLE/DESCRIPTION	DOCUMENT AUTHOR	DOCUMENT DATE
P1891S	ICP-1180	Study of Bidentate Compounds for Separation of Actinides from Commercial LWR Reprocessing Waste (ICP-1180)	L.D. McIsaac, J.D. Baker, J.F.Krupa, R.E. LaPointe, D.H. Meikrantz, and N.C. Schroeder	02/01/1979
P1892S	N/A	National Spent Nuclear Fuel Fact Sheets - Storage of DOE Spent Nuclear Fuel at the Idaho National Laboratory	Idaho National Laboratory	N/A
P1893S	N/A	Material Safety Data Sheet for Tap Magic Aluminum Cutting Fluid	The Steco Corporation	08/09/2006
P1894S	PTR-293	Operating Manual - MTR Hot Cell (PTR-293)	H.T. Watanabe	04/10/1958
P1895S	NA	TRA-730 Catch Tanks and Hot Cell Effluent Collection Project Plan (NA)	Lockheed Martin Idaho Technologies Company	12/01/1997
P1896S	NA	NMEO South Operating and Maintenance Manual General Facility , 1.1.1 - TRA Hot Cell Facility (NA)	Idaho National Engineering Laboratory	07/14/1986
P1897S	N/A	Dry Rod Consolidation Technology (DRCT) Project Results	Carlan K. Mullen, Edgar M. Feldman, Krishna Vinjamuri, Bret Griebenow, R. Jon Lynch, Alvin E. Arave, R. C. Hill	N/A
P1898S	OMM 2100	Operation and Maintenance Manual, TRA Hot Cell Facility Description (OMM 2100)	NA	02/02/1981
P1899S	IDO-16958	Results of ATR Sample Fuel Plate Irradiation Experiment (IDO-16958)	M.J.Graber, G.W. Gibson, V.A. Walker, and W.C. Francis	03/23/1964
P190A	RFP-1837-A	Research and Ecology Semi-Annual Report. Chemistry Research and Development. July through December 1972. RFP-1837-A. (RFP-1837-A)	Rocky Flats Library	5/16/1973
P1900S	N/A	TRA Hot Cell Facility Business Plan - Strategy for Continued Operations	INEEL	2001
P1901S	RPT-351	Evaluation of Closure Options for the Transuranic-Contaminated Components Associated with the TRA-630 Catch Tank System, Voluntary Consent Order Action Plan VCO-5.8.d (RPT-351)	Idaho Cleanup Project	03/01/2007
P1902S	7.16.11	Hot Cells Operating and Maintenance Manual (7.16.11)	NA	05/07/1992

Implementing Document: MP-TRUW-8.13

TRACKING NUMBER	DOCUMENT NUMBER	DOCUMENT TITLE/DESCRIPTION	DOCUMENT AUTHOR	DOCUMENT DATE
P1903S	INEEL/EXT-98-00004	Demonstration of an Optimized TRUEX Flowsheet for Partitioning of Actinides from Actual ICPP Sodium-Bearing Waste Using Centrifugal Contactors in a Shielded Cell Facility (INEEL/EXT-98-00004)	J.D. Law, K.N. Brewer, R.S. Herbst, T.A. Todd, L.G. Olson	01/01/1998
P1904S	HAD-166	Hazard Assessment Document, Reactor Technology Complex Material Test Reactor laboratory Facilities (HAD-166)	Idaho National Laboratory	11/16/2006
P1905S	HAD-140	Fire Safety Assessment TRA-604 Wing A (HAD-140)	INEEL	03/10/2005
P1906S	EDF TRA-HC-692	Safety Analysis for Irradiated Iridium Processing (EDF TRA-HC-692)	T. A. Tomberlin	07/24/1992
P1907S	http://www.inl.gov/resl	Radiological and Environmental Sciences Laboratory (RESL) Overview (http://www.inl.gov/resl)	Idaho National Laboratory	03/01/2012
P1908S	IDO-17201	ETR Operations Branch Progress Report for Cycle No. 81, May 22, 1966 to July 4, 1966 (IDO-17201)	E. H. Smith, et al	08/05/1966
P1909S	CCP-AK-INL-560	Central Characterization Project Acceptable Knowledge Summary Report For Idaho National Laboratory Remote-Handled Transuranic Debris Waste from the Naval Reactors Facility Waste Stream Waste Stream IN-ID-NRF-153 (CCP-AK-INL-560)	Larry Porter	09/30/2009
P191A	RFP-2102-A	Research and Ecology Semi-Annual Report. Chemistry Research and Development. January-June 1973. RFP-2102-A. (RFP-2102-A)	Rocky Flats Library	8/13/1973
P1910S	CCP-AK-INL-570	Central Characterization Project Acceptable Knowledge Summary Report For Idaho National Laboratory Remote-Handled Transuranic Debris Waste from the Naval Reactors Facility Waste Stream IN-ID-NRF-SPC (CCP-AK-INL-570)	Central Characterization Project	12/05/2011
P1911S	IN-1029	ETR Operations Branch Progress Report for Cycle No. 82, July 4, 1966 - August 14, 1966 (IN-1029)	E. H. Smith, et al	09/16/1966
P1912S	DOE/ID-11362	Final Removal Action Report for Test Area North 607A and 607 (DOE/ID-11362)	U.S. Department of Energy, DOE Idaho Operations Office	09/01/2008
P1913S	IDO-17032	TAN Hot Shop and Satellite Facilities (IDO-17032)	R.A. Freeman	11/01/1964
P1914S	IDO-17197	ETR Operations Branch Progress Report for Cycle No. 80, April 7, 1966 - May 22, 1966 (IDO-17197)	E. H. Smith, et al	07/28/1966

Implementing Document: MP-TRUW-8.13

TRACKING NUMBER	DOCUMENT NUMBER	DOCUMENT TITLE/DESCRIPTION	DOCUMENT AUTHOR	DOCUMENT DATE
P1915S	DOE/ID-11328	Engineering Evaluation/Cost Analysis for the Materials Test Reactor Facility End-State and Vessel Disposal (DOE/ID-11328)	Idaho Cleanup Project	06/01/2007
P1916S	DRR-NMEO 2885	NMEO South Operating and Maintenance Manual Standard Operating Procedure Subject: 3.1.1.1 Decontamination Procedures (DRR-NMEO 2885)	N/A	10/22/1987
P1917S	DOE/ID-11272	Engineering Evaluation/Cost Analysis for Decommissioning of the Engineering Test Reactor Complex (DOE/ID-11272)	Idaho Cleanup Project	10/01/2006
P1918S	Abstract #8297	The Decontamination, Decommissioning, and Demolition of the Engineering Test Reactor at the Idaho Cleanup Project (Abstract #8297)	Daniel W. Coyne and Kelly Rhodes	02/28/2008
P1919S	IDO-16191	MTR Technical Quarterly Report, Second Quarter - 1954 (IDO-16191)	J. R. Huffman	09/03/1954
P192A	RFP-2200-A	Research and Ecology Semi-Annual Progress Report, July-December 1973 (RFP-2200-A)	R. D. Forest, et al.	3/18/1974
P1920S	DOE/ID-11309	Engineering Evaluation/Cost Analysis for Power Burst Facility (PER-620), Final End State and PBF Vessel Disposal (DOE/ID-11309)	Idaho Cleanup Project	05/01/2007
P1921S	PTR-613	SPERT Program Review (PTR-613)	Frank Schroeder	01/21/1963
P1922S	IDO-16888	SPERT II Reactor Facility (IDO-16888)	C.R. Montgomery	08/23/1963
P1923S	IDO-16905	Nuclear Start-up of the SPERT IV Reactor (IDO-16905)	J.G. Crocker, J.E. Koch, Z.R. Martinson, A.M. McGlinsky, and L.A. Stephan	07/24/1963
P1924S	IDO-16745	SPERT IV Facility (IDO-16745)	R.E. Heffner, et al.	02/22/1962
P1925S	http://www.globalsecurity.org/wmd/facility/idaho_i	Waste Reduction Operations Complex (http://www.globalsecurity.org/wmd/facility/idaho_i)	globalsecurity.org	07/24/2011
P1926S	ICP-1029	Analytical Method Manual Part I , Methods used by the Remote and Service Analysis Laboratory (ICP-1029)	Allied Chemical Corporation	10/01/1973
P1927S	ICP-1031	Analytical Method Manual Part III, Methods used by the Mass Spectrometry Laboratory (ICP-1031)	Allied Chemical Corporation	04/01/1976
P1928S	CCP-AK-INL-550	Central Characterization Project Acceptable Knowledge Summary Report for Stored Remote-Handled Transuranic Debris from the Idaho Nuclear Technology and Engineering Center at the Idaho National Laboratory, Waste Stream ID-INTEC-RH (CCP-AK-INL-550)	Central Characterization Project	03/22/2010

Implementing Document: MP-TRUW-8.13

TRACKING NUMBER	DOCUMENT NUMBER	DOCUMENT TITLE/DESCRIPTION	DOCUMENT AUTHOR	DOCUMENT DATE
P1929S	INEL/CON-97-00705	Actinide Partitioning from Actual Idaho Chemical Processing Plant Acidic Tank Waste using Centrifugal Contactors (INEL/CON-97-00705)	Jack D. Law, Ken N. Brewer, and Terry A. Todd	Not dated
P193A	RFP-2360-A	Research and Development Semi-Annual Progress Report for July through December 1974. RFP-2360-A. (RFP-2360-A)	Rocky Flats Library	2/24/1975
P1930S	ICP-1181	Actinide Partitioning from ICPP Waste: An Investigation of Methods to Eliminate Mercury Interference (ICP-1181)	J.F. Krupa, L.D. McIsaac, J.D. Baker, D.H. Meikrantz, and N.C. Schroeder	03/01/1979
P1931S	NA	Experimental Studies at the Idaho Chemical Processing Plant on Actinide Partitioning from Acidic Nuclear Wastes (NA)	L.D. McIsaac, J.D. Baker, D.H. Meikrantz, and N.C. Schroeder	03/01/1981
P1932S	DOE/NE-ID-11157	Engineering Evaluation/Cost Analysis for the Decontamination and Decommissioning of Building CPP-627, the Remote Analytical Facility (DOE/NE-ID-11157)	U.S. Department of Energy, DOE Idaho Operations Office	04/01/2004
P1933S	http://www.globalsecurity.org/intell/library/imint	Idaho Nuclear Technology and Engineering Center Summary (http://www.globalsecurity.org/intell/library/imint)	globalsecurity.org	07/07/2011
P1934S	LA-UR-96-4872	Isotopic Compositions of Inventory Designations, 'Mixed Fission Product' and 'Mixed Activation Product' (LA-UR-96-4872)	Erik L. Vold	02/14/1997
P1935S	PG-T-93-020	TRA Hot Cell Historical Dose Assessment for Years Prior to 1992 (PG-T-93-020)	W.D. Wagner and T.S. Bohn	07/01/1993
P1936S	BNWL-1756	The MTR-Phoenix Fuel Experiment, Burnup Analysis and Correlations (BNWL-1756)	R.I. Smith, D.A. Kottwitz, D.R. Oden, and U.P. Jenquin; Battelle Northwest Laboratories	06/01/1973
P1937S	DOE/ID-11319	HWMA/RCRA Closure Plan for the Fluorinel Dissolution Process Makeup and Cooling and Heating Systems, Voluntary Consent Order SITE-TANK-005 Action Plan Tank Systems INTEC-066, INTEC-067, INTEC-068, and INTEC-072 (DOE/ID-11319)	Idaho Cleanup Project	05/01/2007
P1938S	NA	Safety assessment document for the TRA Hot Cells (NA)		04/01/1984

Implementing Document: MP-TRUW-8.13

TRACKING NUMBER	DOCUMENT NUMBER	DOCUMENT TITLE/DESCRIPTION	DOCUMENT AUTHOR	DOCUMENT DATE
P1939S	IDO-16623	Hazards Evaluation of Proposed Site for ETR II (IDO-16623)	D. R. deBoisblanc, R. J. Nertney, L. H. Jones	08/18/1960
P194A	RFP-2417-A	Research and Development Semi-Annual Progress Report for January through June 1975 (RFP-2417-A)	R. H. Karlsson, et al.	8/29/1975
P1940S	ACI-216-4.10	Idaho Chemical Processing Plant, Safety review document, Section 4.10, Laboratory Facilities, Volume II (ACI-216-4.10)	M.K. Valetine	04/01/1977
P1941S	PTR-729	Remote and Service Analysis Group Operating Manual (PTR-729)	B.R. Hunter and G.A. Huff	11/01/1964
P1942S	EGG-NPR-6688	INEL Environmental Characterization Report , Volumes 1: Summary (EGG-NPR-6688)	A. L. Bowman, W. F. Downs, K. S. Moor, and B. F. Russell, EG&G, Inc.	09/01/1984
P1943S	N/A	Technical Safety Requirements for the Test Reactor Area Hot Cell Facility	Lockheed Martin Idaho Technologies Co.	05/12/1999
P1944S	IN-1437	Metallurgy and Materials Science Branch Annual Report Fiscal Year 1970 (IN-1437)	R. M. Brugger	11/01/1970
P1945S	NA	Engineering Test Reactor operated by Phillips Petroleum Company for Idaho Operations Office USAEC (NA)	Phillips Petroleum Company	Not dated
P1946S	IDO-17154	Annual Progress Report on Reactor Fuels and Materials Development for FY 1965 (IDO-17154)	W. C. Francis	02/01/1966
P1947S	DOE/NE-ID-11196	Engineering Evaluation/Cost Analysis for Phase 1 of the Decommissioning for the Power Burst Facility Reactor Building (PER-620) (DOE/NE-ID-11196)	INEEL	12/01/2004
P1948S	DOE/ID-11453	Final Removal Action Report for CPP -601, CPP-602, CPP-627, CPP-630, and CPP-640 (DOE/ID-11453)	U.S. DOE, Idaho Operations Office	02/01/2012
P1949S	NA	Safety Analysis Report for the TRA Hot Cells (NA)	W. S. Blair	08/01/1995
P195A	RFP-2680-A	Research and Developement Semiannual Progress Report for January through June, 1977 (RFP-2680-A)	F. J. Miner, et al.	10/21/1977
P1950S	IDO-16503	ETR Hazards Survey for WAPD M-13 Experiment (IDO-16503)	R. L. Gump	N/A
P1951S	IN-1092	ETR Operations Branch Progress Report for Cycle No. 88, March 13, 1967-April 24, 1967 (IN-1092)	E. H. Smith, et al	06/12/1967

Implementing Document: MP-TRUW-8.13

TRACKING NUMBER	DOCUMENT NUMBER	DOCUMENT TITLE/DESCRIPTION	DOCUMENT AUTHOR	DOCUMENT DATE
P1952S	IDO-16879	Power Burst Facility (PBF) Conceptual Design, Phillips Petroleum Company (IDO-16879)	A. A. Wasserman, S. O. Johnson, R. E. Heffner, R. S. Kern, A. H. Spano	06/01/1963
P1953S	N/A	Material Safety Data Sheet for MET-L-X	Ansul Incorporated	Sept. 2003
P1954S	N/A	Material Safety Data Sheet for Radiacwash	Atomic Products Corp	02/22/1988
P1955S	INEEL/EXT-04-02348	Critical Infrastructure Test Range User's Manual (INEEL/EXT-04-02348)	Idaho National Laboratory	01/01/2006
P1956S	idaho_inel-facility-citr.htm	Idaho National Laboratory, Critical Infrastructure Test Range Complex Summary (idaho_inel-facility-citr.htm)	globalsecurity.org	07/24/2011
P1957S	INEEL/EXT-99-000954	Demonstration of the UNEX Process for the Simultaneous Separation of Cesium, Strontium, and the Actinides from Actual INEEL Tank Waste (INEEL/EXT-99-000954)	J. D. Law, R. S. Herbst, T. A. Todd	10/19/2013
P1958A	INEL-95/0224	TRUEX Partitioning from Radioactive ICPP Sodium Bearing Waste (INEL-95/0224)	R. S. Herbst, K. N. Brewer, T. J. Tranter, T. A. Todd	03/01/1995
P1959S	CCP-AK-INL-520	Acceptable Knowledge Summary Report for Stored Remote-Handled Transuranic Sludge Waste From Reactor Technology Complex at the Idaho National Laboratory - Waste Stream ID-RTC-S3000 (CCP-AK-INL-520)	Central Characterization Project	04/08/2002
P196A	RFP-3180	Chemistry Research and Development Annual Progress Report, November 1, 1979 to October 31, 1980 (RFP-3180)	F. J. Miner, et al.	8/4/1981
P1960S	IDO-16229	MTR Technical Branch Quarterly Report, First Quarter - 1955 (IDO-16229)	J. R. Huffman	06/20/1955
P1961S	TOC-80	Manual 17-Waste Management, Table of Contents (TOC-80)	Idaho Cleanup Project	01/04/2012
P1962S	INL/EXT-06-11564	Prevention of Accidental Releases - General Duty Clause Compliance Report for INL Facilities (INL/EXT-06-11564)	Marianne Little	07/01/2006
P1963S	INEEL/EXT-03-00997	Estimated Radiological Inventory Sent from Test Area North to the Subsurface Disposal Area from 1960 through 1993 (INEEL/EXT-03-00997)	Greg W. Studley, Peter A. Pryfogle, Donald E. Sebo, Steve L. Lopez. Pui Kuan	09/01/2005
P1964S	20-8138-032 (20-8128, 20-8129)	Material Safety Data Sheet for Buehler EPO-KWIK Hardener, Buehler Ltd., Product: 20-8138-032 (21-8138, 20-8139, 8175s005) (20-8138-032 (20-8128, 20-8129))	N/A	12/21/2004

Implementing Document: MP-TRUW-8.13

TRACKING NUMBER	DOCUMENT NUMBER	DOCUMENT TITLE/DESCRIPTION	DOCUMENT AUTHOR	DOCUMENT DATE
P1965S	20-8136-128 (20-8128, 20-8129)	Material Safety Data Sheet for Buehler EPO-KWICK Resin, Buehler Ltd., Product: 20-8136-032 (21-8128, 20-8129, 8175s005) (20-8136-128 (20-8128, 20-8129))	Buehler Ltd.,	12/21/2004
P1967S	INEEL/EXT-2000-01610	Application for a Title V Operating Permit for the Idaho National Engineering and Environmental Laboratory, Volume VIII, Test Reactor Area (INEEL/EXT-2000-01610)	Idaho National Enginnering and Environmental Laboratory	03/01/2001
P1968A	IDO-17153	ETR Operations Branch Progress Report for Cycle No. 77, December 5, 1965 - January 16, 1966 (IDO-17153)	E. H. Smith	03/04/1966
P1969S	EE-84-023	An Environmental Evaluation for the Test Reactor Area Laboratory Addition (EE-84-023)	Vern Briscoe	06/01/1987
P197A	RFP-3324	Chemistry Research and Development Annual Progress Report November 1, 1980 to September 30, 1981. RFP-3324. (RFP-3324)	Rocky Flats Library	8/11/1982
P1970A	RPT-TRUW-92	RPT-TRUW-92: Acceptable Knowledge Document for Select Idaho National Laboratory (INL) Facilities, current revision. (RPT-TRUW-92)	AMWTP	07/18/2013
P1971A	RPT-ESH-062	Category I Exemption for a 30% Increase in the Transuranic Storage Area–Retrieval Enclosure Retrieval Rate (RPT-ESH-062)	AMWTP	10/08/2012
P198A	RFP-3511	Chemistry Research and Development Annual Progress Report November 1, 1981 to September 30, 1982. (RFP-3511)	N/A	9/16/1983
P1983A	DOE/WIPP 06-3345	Waste Isolation Pilot Plant Flammable Gas Analysis (DOE/WIPP 06-3345)	US Department of Energy	07/15/2013
P1984S	INST-OI-100	INST-OI-100, Retrieval Enclosure Waste Drum Extraction (INST-OI-100)	AMWTP	07/18/2002
P1985S	INST-OI-101	INST-OI-101, Retrieval Enclosure Waste Box Extraction (INST-OI-101)	AMWTP	06/19/2002
P1986A	INST-FOI-38	Drum Import/Export Glovebox Operations (INST-FOI-38)	AMWTP	12/16/2013
P1987A	N/A	Unclassified Controlled Nuclear Information (UCNI) and Official Use Only (OUO) records from Los Alamos National Laboratory included in RPT-TRUW-93.	Joe Velasquez	08/07/2013
P1988A	N/A	Non-UCNI/OUO source document records from Los Alamos National Laboratory included in RPT-TRUW-93.	Joe Velasquez	08/19/2013

Implementing Document: MP-TRUW-8.13

TRACKING NUMBER	DOCUMENT NUMBER	DOCUMENT TITLE/DESCRIPTION	DOCUMENT AUTHOR	DOCUMENT DATE
P1989S	INST-MS-0097	INST-MS-0097, Removal of Maintenance Debris from the Supercompactor Glovebox Suite (INST-MS-0097)	AMWTP	09/23/2009
P199A	RFP-3654	Chemistry Research and Development Annual Progress Report, October 1, 1982 to September 30, 1983 (RFP-3654)	F. J. Miner, et al.	9/24/1984
P1990S	INST-MS-0111	INST-MS-0111, Supercompactor Hydraulic Oil Change (INST-MS-0111)	AMWTP	05/21/2008
P1991S	INST-MI-1082	INST-MI-1082, System 235 Air Filter Replacement (INST-MI-1082)	AMWTP	07/31/2013
P1992S	INST-MI-1001	INST-MI-1001, Ventilation HEPA Filter Replacement (INST-MI-1001)	AMWTP	02/21/2013
P1993S	INST-MI-1051	INST-MI-1051, HVAC Pre-Filter Replacement (INST-MI-1051)	AMWTP	09/07/2012
P1994S	INST-MI-1070	Advanced Mixed Waste Treatment Project System 234 Pre-filter Replacement (INST-MI-1070)	AMWTP	12/21/2009
P1995A	N/A	RPT-TRUW-83, Acceptable Knowledge Summary for Supercompactor Debris Waste (BN510.2) WSPF package	AMWTP	08/26/2013
P1996A	RPT-TRUW-83	RPT-TRUW-83. Rev 6, Acceptable Knowledge for Supercompacted Debris Waste (RPT-TRUW-83)	AMWTP	09/09/2013
P1997A	ID-INL-S3900	Form 1900 for Materials and Fuels Complex trans-shipped Advanced Test Reactor Complex waste (ID-INL-S3900)	MFC	09/19/2013
P1998A	Form 1900 - LA-MHD01.001	Form 1900, AMWTP Offsite Waste Stream Profile Form for LANL LA-MHD01.001. (Form 1900 - LA-MHD01.001)	AMWTP	09/12/2013
P1999A	Form 1900 - LA-MHD04.001	Form-1900, AMWTP Offsite Waste Stream Profile Form for LANL LA-MHD04.001 (Form 1900 - LA-MHD04.001)	AMWTP	09/12/2013
P200A	RFP-3825	Chemistry Research and Development Annual Progress Report, October 1, 1983 to September 30, 1984 (RFP-3825)	K. V. Gilbert, et al	6/13/1986
P2000A	RPT-TRUW-06	AMWTP Baseline AK for Newly Generated Waste (RPT-TRUW-06)	AMWTP	07/13/2009
P2001A	Form 1900 - LA-MHD09.001	Form-1900, AMWTP Offsite Waste Stream Profile Form for LANL LA-MHD09.001. (Form 1900 - LA-MHD09.001)	AMWTP	03/13/2014
P2002A	BN510.3	BN510.3 Waste Stream Profile Package for Supercompactor Debris Waste (BN510.3)	AMWTP	02/05/2014
P2003A	DOE/WIPP-02-3122	Transuranic Waste Acceptance Criteria for the Waste Isolation Pilot Plant (DOE/WIPP-02-3122)	U.S. Department of Energy, Carlsbad Field Office	04/22/2013

Implementing Document: MP-TRUW-8.13

TRACKING NUMBER	DOCUMENT NUMBER	DOCUMENT TITLE/DESCRIPTION	DOCUMENT AUTHOR	DOCUMENT DATE
P2004S	MP-TRUW-8.13	MP-TRUW-8.13, Collection, Review, and Management of Acceptable Knowledge Documentation (MP-TRUW-8.13)	AMWTP	08/09/2013
P2005A	INL/EXT-13-29879	Process Knowledge Summary Report for Advanced Test Reactor Complex Contact-Handled Transuranic Waste Drum TRA010029 (INL/EXT-13-29879)	B. R. Adams R. P. Grant P. R. Smith J. L. Weisgerber	09/01/2013
P2006A	ECAR No.: 2329	Radiological Source Term Determination for Waste Container Having Unique ID TRA010029 (ECAR No.: 2329)	James T. Schrader	08/09/2013
P2007A	Form-1727, Generator Shipment No. 13MFCTRU-01	Non-AMWTP Generator Shipment Request: Profile Identification Numbers ID -MFC-S5490 (Heterogeneous Debris) and ID-INL-S3900 (Homogenous Solids). (Form-1727, Generator Shipment No. 13MFCTRU-01)	Charlyss Lee, WGS MFC Facility Representative	08/28/2013
P2008A	RPT-TRUW-83	RPT-TRUW-83, Revision 7; Acceptable Knowledge Summary for Supercompactor Debris Waste (BN510.3)(SDA debris) (RPT-TRUW-83)	AMWTP	11/27/2013
P2009A	MP-TRUW-8.40	INL Waste Acceptance (MP-TRUW-8.40)	John Nicklas	01/20/2011
P201A	RFP-3931	Chemistry Research and Development Annual Progress Report, October 1, 1984 through September 30, 1985 (RFP-3931)	K. V. Gilbert, et al.	8/18/1986
P2010A	RPT-TRUW-83	RPT-TRUW-83, Acceptable Knowledge Summary for Supercompacted Debris Waste (BN510.1), Rev. 0 and Rev. 3 (RPT-TRUW-83)	AMWTP	MULT
P2014S	FRM-229	CCP-AK-INL-520 Rev 2 (FRM-229)	Joel Hitz, Tom Clements	11/12/2010
P2017A	IWTS 5388N	Integrated Waste Tracking System Material Profile 5388N (Inactive) for INL ATR Complex Instrument containing characteristic liquid. (IWTS 5388N)	Sylvia Sing	08/16/2007
P2018A	ID-INL-S3900	Form 1735 AMWTP Safety Basis Hazardous Material Waste Acceptance Criteria Calculator for Waste Stream ATR CH-TRU Absorbed Liquid, Container #TRA010029 (ID-INL-S3900)	Rand Watson, Rachelle Hubler	09/10/2013
P2019A	ID-INL-S3900	Form 1736 AMWTP Safety Basis Radioactive Material Waste Acceptance Criteria Calculator for Waste Stream ATR CH-TRU Absorbed Liquid, Container #TRA010029 (ID-INL-S3900)	Rand Watson, Rachelle Hubler	08/15/2013
P202A	R&D 86-012	Chemistry R&D Monthly Progress Report. R&D 86-012. (R&D 86-012)	Rocky Flats Library.	1/1/1986
P2021S	LWP-8300	Transuranic Waste Handling (LWP-8300)	INL - Battelle Energy Alliance	08/10/2010

Implementing Document: MP-TRUW-8.13

TRACKING NUMBER	DOCUMENT NUMBER	DOCUMENT TITLE/DESCRIPTION	DOCUMENT AUTHOR	DOCUMENT DATE
P2022A	PLN-522	Quality Assurance Program Plan for the Waste Management/Waste Certification Program (PLN-522)	INL, Leonard C. Stenzel	04/29/2011
P2023A	DOE/TRU-13-3425	Annual Transuranic Waste Inventory Report - 2013 (Data Cutoff Date 12/31/2012) (DOE/TRU-13-3425)	Los Alamos National Laboratory - Carlsbad Operations (LANL-CO)	10/13/2013
P2024A	RPT-TRUW-88	ACCEPTABLE KNOWLEDGE SUMMARY FOR AMWTP WMF-676 PCB CONTAMINATED DEBRIS (BN600) (RPT-TRUW-88)	AMWTP	08/12/2012
P2025A	Form-1900	Off-site waste profile Form 1900 ID-ICP-MFC-Gloves (AW-167) (Form-1900)	AMWTP	01/14/2014
P2026A	N/A	Waste Profile Sheet for transuranic and transuranic mixed waste streams [ATR (IR-603) absorbed liquids]	EG&G, Bruce Mincher	05/29/1991
P2027A	IWTS 5649N	Integrated Waste Tracking System Material Profile 5649N (Inactive) for INL ATR Complex Contact Handled TRU Waste, Absorbed Liquids. (IWTS 5649N)	Paul A. Velasquez	10/01/2009
P2028A	LWP-15026	Radioactive Material Characterization Methodologies for BEA Facilities - Laboratory-wide Procedure (LWP-15026)	INL	08/17/2012
P2029A	IWTS 4246N	Integrated Waste Tracking System Material Profile 4246N (Inactive) for INL ATR Complex Contact Handled Transuranic (TRU) Waste - Cleanup/Stabilization. (IWTS 4246N)	Paul A. Velasquez	08/20/2009
P203A	N/A	Interim Guidance on Ensuring that Waste Qualifies for Disposal at the Waste Isolation Pilot Plant.	Carlsbad Area Office	02/13/1997
P2030A	IWTS Material Profile 2913Q	Integrated Waste Tracking System Material Profile 2913Q (Inactive) for TRA Radioactive Legacy Source Drum. (IWTS Material Profile 2913Q)	Leslie E. Soderquist	05/15/2001
P2031S	INST-FOI-39	Processing Sludge Drums in the South Box Line (suspended) (INST-FOI-39)	AMWTP	09/14/2011
P2032S	969 F.2d 1122	Nuclear Reg. Rep. P 20,555, 35 ERC 1228, 297 U.S.App.D.C. 122, 22 Envtl. L. Rep. 21,262 (969 F.2d 1122)	United States Court of Appeals, District of Columbia Circuit	07/10/1992
P2033A	RWMC13006	Waste Determination & Disposition FORM (WDDF) for Rocky Flasts Inorganic Sludge (BNINW216 and BNINW218) (RWMC13006)	Sheila Haily, WGS Facility Representative	10/14/2013

Implementing Document: MP-TRUW-8.13

TRACKING NUMBER	DOCUMENT NUMBER	DOCUMENT TITLE/DESCRIPTION	DOCUMENT AUTHOR	DOCUMENT DATE
P2034A	CCP-AK-INL-026	Central Characterization Program Acceptable Knowledge Summary Report For Idaho National Laboratory Sludge Repackage Project Combined Sludge Waste Waste Stream: ID-SRP-S3000 (CCP-AK-INL-026)	Mike Ramirez, Central Characterization Project	11/18/2013
P2035S	EDF CFA-2001-013	Characterization for Disposal of a Drum of MTR Legacy Actinide Sources at TRA (EDF CFA-2001-013)	T.S. Bohn	04/11/2001
P2036S	EDF CFA-2001-013 R1	Characterization for Disposal of a Drum of MTR Legacy Actinide Sources at TRA (EDF CFA-2001-013 R1)	T.S. Bohn	05/14/2001
P2037S	N/A	INEEL Waste Determination & Disposition Form (WDDF), TRA Radioactive Legacy Source Drum, MP 4246N	Leslie E. Soderquist	02/25/2002
P2039A	RPT-TRUW-88	Acceptable Knowledge Summary for AMWTP WMF-676 PCB Contaminated Debris (RPT-TRUW-88)	AMWTP	TBD
P204A	DOE/EM-0319	Linking Legacies. Connecting the Code War Nuclear Weapons Production Processes to Their Environmental Consequences. DOE/EM-0319. (DOE/EM-0319)	US DOE Office of Environmental Management.	1/1/1997
P2040S	WDDF TRA-05-009	INEEL Waste Determination & Disposition Form (WDDF), TRA Legacy Transuranic Source Drum, MP 4246N (WDDF TRA-05-009)	Rhonda Rohe	02/15/2005
P2041S	WDDF ATRX-13-006	INL Waste Determination & Disposition Form (WDDF), ATR Complex Absorbed TRU Liquids, IWTS Material Profile 5649N (WDDF ATRX-13-006)	Paul Smith	08/15/2013
P2042S	WDDF ATRX-13-006	INL Waste Determination & Disposition Form (WDDF), ATR Complex Absorbed TRU Liquids, IWTS Material Profile 5649N (WDDF ATRX-13-006)	Paul Smith	None*
P2043S	INST-FOI-28	INST-FOI-28, Cleaning and Packaging of Dust/Debris/Material from 1st Floor Cells in WMF-676 (INST-FOI-28)	AMWTP	01/31/2013
P2044S	INST-FOI-37	INST-FOI-37, Box Line Quarterly Clean Out (INST-FOI-37)	AMWTP	11/20/2013
P2045S	MP-TRUW-8.45	MP-TRUW-8.45, Virtual Overpack Process and Planning (MP-TRUW-8.45)	AMWTP	10/03/2013
P2046S	INST-TRUW-8.13.1	INST-TRUW-8.13.1, TRU Programs Site Project Office Process (INST-TRUW -8.13.1)	AMWTP	09/09/2013

Implementing Document: MP-TRUW-8.13

TRACKING NUMBER	DOCUMENT NUMBER	DOCUMENT TITLE/DESCRIPTION	DOCUMENT AUTHOR	DOCUMENT DATE
P2047S	LST-EC&P-11	LST-EC&P-11, AMWTP HWMA/RCRA Permit WMF-676 Waste Management Criteria (LST-EC&P-11)	AMWTP	04/16/2013
P2048S	INST-OI-115	INST-OI-115, Real-Time Radiography Unit Operation (WMF-634) (INST-OI-115)	AMWTP	12/16/2013
P2049S	INST-OI-60	INST-OI-60, Real-Time Radiography Examinations (Non-Certified Scan) (INST-OI-60)	AMWTP	08/19/2013
P205A	INEEL/EXT-98-01137	Nonmixed Waste Determination for IDC 300 Waste (Graphite Molds) (INEEL/EXT-98-01137)	R. E. Arbon	2/1/1999
P2050S	MP-TRUW-8.41	MP-TRUW-8.41, Offsite Waste Acceptance (MP-TRUW-8.41)	AMWTP	11/05/2013
P2051S	MP-TRNS-20.2	MP-TRNS-20.2, Shipment and Receipt of Hazardous Materials (MP-TRNS-20.2)	AMWTP	03/05/2014
P2052S	INST-OI-62	INST-OI-62, Mixed/Radioactive Waste Receipt and Transfer (INST-OI-62)	AMWTP	12/17/2013
P2053A	CCP-TP-146	CCP-TP-146, CCP SuperHENC Operating procedure (CCP-TP-146)	CCP	07/22/2013
P2054S	MP-PRPL-22.1	MP-PRPL-22.1, Production Planning (MP-PRPL-22.1)	AMWTP	12/17/2013
P2055A	Form 1900 -	Form-1900, AMWTP Offsite Waste Stream Profile Form for LANL LA-MHD03.001 (Form 1900 -)	AMWTP	
P2056A	CCP-AK-LANL-013	CCP-AK-LANL-013, Central Characterization Program Acceptable Knowledge Summary Report For LOS ALAMOS NATIONAL LABORATORY LOVELACE RESPIRATORY RESEARCH INSTITUTE WASTE WASTE STREAM: LA-MHD05-ITRI.001 (CCP-AK-LANL-013)	CCP	04/18/2013
P2057A	CCP-AK-LANL-012	CCP-AK-LANL-012 Central Characterization Program Acceptable Knowledge Summary Report For LOS ALAMOS NATIONAL LABORATORY TA-48 ALPHA FACILITY WASTE STREAM: LA-MHD08.001 (CCP-AK-LANL-012)	CCP	04/09/2013
P2058A	LA-MHD05-ITRI.001	LA-MHD05-ITRI.001 LANL WSPF (LA-MHD05-ITRI.001)	URS Washington TRU solutions	05/03/2011
P2059A	LA-MHD08.001	LA-MHD08.001 LANL WSPF (LA-MHD08.001)	URS Washington TRU solutions	02/29/2010

Implementing Document: MP-TRUW-8.13

TRACKING NUMBER	DOCUMENT NUMBER	DOCUMENT TITLE/DESCRIPTION	DOCUMENT AUTHOR	DOCUMENT DATE
P206A	INEEL/INT-98-01268, EDF-RWMC-1045	234U Activity with Respect to Total Alpha Activity (INEEL/INT-98-01268, EDF -RWMC-1045)	INEEL	2/2/1999
P2060A	DOE/WIPP 02-3196	DOE/WIPP 02-3196, Waste Isolation Pilot Plant Initial Report for PCB Disposal Authorization (40 CFR § 761.75[c]) (DOE/WIPP 02-3196)	EPA	03/19/2002
P2061S	N/A	Material Safety Data sheets Petroleum Ether (and applicable e-mail correspondence and photos of reagent bottle)	Mallinckrodt	04/06/1989
P2062S	CCP-AK-INL-605	Central Characterization Project Sampling and Analysis Plan for the REMOTE-HANDLED TRANSURANIC (RH-TRU) DEBRIS WASTE from the EBR-I REACTOR AT THE IDAHO NATIONAL LABORATORY (INL) WASTE STREAM: ID-EBR-S5000 (CCP-AK-INL-605)	CCP	09/09/2011
P2063S	ID-SRP-S3000	Central Characterization Program Acceptable Knowledge Summary Report for Idaho National Laboratory Sludge Repackage Project Combined Sludge Waste Waste Stream: ID-SRP-S3000 (ID-SRP-S3000)	CCP	11/18/2013
P2064S	A-98-49; II-A4-180	Waste Characterization Tier 1 Change Report, Addition Of Contact-Handled Transuranic Waste To The Advanced Mixed Waste Treatment Project Approved Program: S3000 And S5000 Waste From Idaho National Laboratory (A-98-49; II-A4-180)	EPA	02/11/2014
P2065S	IAG-600	Interface Agreement: Roles and Responsibilities for AMWTP Contact Handled Return Project Waste Transfers from CH2M-WG Idaho, LLC to the Advanced Mixed Waste Treatment Project (IAG-600)	Tammy Hobbes, CWI Vice President Waste Management, and David Haar, AMWTP Waste Programs Manager	04/24/2014
P2066S	INST-FOI-40	INST-FOI-40, large Item Disposal into System 352 Export Box (INST-FOI-40)	AMWTP	09/11/2013
P2067S	MP-TRUW-8.5	TRU Waste Certification, MP-TRUW-8.5 (MP-TRUW-8.5)	AMWTP	05/02/2013
P2068S	RPT-NFCS-20	RPT-NFCS-20, Criticality Safety Evaluation for Sludge Drum Processing in South Box Line, (RPT-NFCS-20)	AMWTP - C.T. Scott	11/06/2012
P2069S	RPT-NFCS-11	RPT-NFCS-11, Criticality Safety Evaluation for Container Conveyors within AMWTF (RPT-NFCS-11)	C.T. Scott	10/15/2012

Implementing Document: MP-TRUW-8.13

TRACKING NUMBER	DOCUMENT NUMBER	DOCUMENT TITLE/DESCRIPTION	DOCUMENT AUTHOR	DOCUMENT DATE
P207A	EDF-RWMC-803	RWMC HWMA/RCRA Permit. Permit Condition II.K.4 Semi-Annual Verification / Characterization Progress Report. This report includes EDF-RWMC-803, Rev. 3 (EDF-95/022, Rev. 3) in an appendix. (EDF-RWMC-803)	INEEL	02/01/2000
P2070S	RPT-NFCS-02	RPT-NFCS-02, Criticality Safety Evaluation for AMWTF Box Lines (RPT-NFCS-02)	D.M. Vaughn	11/15/2012
P2071A	TPR-7298	DECONTAMINATION CELL OPERATIONS IN CPP-659 (TPR-7298)	Idaho Cleanup Project	06/25/2013
P2072A	TPR-7301	STEAM SPRAY BOOTH OPERATION (TPR-7301)	Idaho Cleanup Project	06/27/2012
P2075S	RPT-NFCS-09	Criticality Safety Analysis Involving the Use of Liquid Sorbents and Immobilizing Agents (RPT-NFCS-09)	C. T. Scott	03/01/2012
P208A	N/A	Hydrogen permeability Through Taped and Untapped "Clam Shell" Containers Used at Rocky Flats Environmental Technology Site.	RFETS	11/11/1998
P209A	Drawing No.175603	Radioactive Waste Management Complex Area Map Drawing No.175603, Rev 7, February 24, 2000. Rev. 8, September 18, 2002. (Drawing No.175603)	RWMC Document Control.	9/18/2002
P210A	EDF-1242	Default Plutonium Mass Fractions for Rocky Flats Plant Waste. EDF-1242. (EDF-1242)	Historical Shipping Records	9/1/1999
P211A	CCN 00-011499; WSPF INW276.003	Waste Stream Profile form INW276.003 Graphite, transmittal letter (CCN 00-011499) from Thomas Monk to Jerry Wells, US DOE, dated July 25, 2000, and WSPF Update for WIPP Operating Record dated February 19, 2003. (CCN 00-011499; WSPF INW276.003)	TWCP Document Control, RWMC	2/19/2003
P212A	INW276.004; CNN 00-113770	Waste Stream Profile Form INW276.004 – Graphite, transmittal letter (CNN 00-113770) From Thomas Monk to Jerry Wells, US DOE, dated September 26, 2000, and WSPF Update for WIPP Operating Record, dated February 19, 2003. (INW276.004; CNN 00-113770)	TWCP Document Control RWMC.	2/19/2003
P213A	INW296.001 ; CNN 00-014770	Waste Stream Profile Form INW296.001 – Non-special Source Metals, transmittal letter (CNN 00-014770) from Thomas Monk to Jerry Wells, US DOE, dated October 23, 2000, and WSPF Update for WIPP Operating Record, not dated. (INW296.001 ; CNN 00-014770)	TWCP Document Control RWMC	10/23/2000
P214A	INW247.001	WIPP Waste Stream Profile Form INW247.001-Raschig Rings and Transmittal Letter (CCN 15439) to Jerry Wells, U.S. DOE (INW247.001)	Thomas Monk and Rodney Arbon	11/13/2000

Implementing Document: MP-TRUW-8.13

TRACKING NUMBER	DOCUMENT NUMBER	DOCUMENT TITLE/DESCRIPTION	DOCUMENT AUTHOR	DOCUMENT DATE
P215A	CNN 19871	Waste Stream Profile Form INW 243.001 – Glass (except Raschig Rings), Transmittal letter (CNN 19871) from Thomas Monk to Jerry Wells, US DOE, dated March 26, 2001, and WSPF Update for WIPP Operating Record, dated February 19, 2003. (CNN 19871)	Thomas Monk	3/26/2001
P216A	INW211.001 ; CNN 21154	Waste Stream Profile Form INW 211.001 - Filters and Insulation, transmittal letter (CNN 21154) from Thomas Monk to Jerry Wells, US DOE, dated April 26, 2001, and WSPF Update for WIPP Operating Record, not dated. (INW211.001 ; CNN 21154)	TWCP Document Control RWMC.	4/26/2001
P217A	INW 216.001 ; CNN 21151	Waste Stream Profile Form INW 216.001 - First/Second Stage Sludge, transmittal letter (CNN 21151) from Thomas Monk to Jerry Wells, US DOE, dated May 24, 2001, and WSPF Update for WIPP Operating Record, dated February 19, 2003. (INW 216.001 ; CNN 21151)	TWCP Document Control	2/19/2003
P218A	INW 218.001 ; CNN 23889	Waste Stream Profile Form INW 218.001 - Building 374 Sludge, transmittal letter (CNN 23889) from Thomas Monk to Jerry Wells, US DOE, dated July 19, 2001, and WSPF Update for WIPP Operating Record, dated February 19, 2003. (INW 218.001 ; CNN 23889)	TWCP Document Control RWMC.	2/19/2003
P219A	INEEL /EXT-01-00015	Hazardous Waste Code Determination for First / Second Stage Sludge Waste Stream (IDCs 001, 002, 800). INEEL /EXT-01-00015. Arbon, R. E., Bechtel BWXT Idaho, LLC, May 2001. (INEEL /EXT-01-00015)	R.E. Arbon, TWCP Document Control RWMC	5/1/2001
P220A	INEEL /EXT-01-00517	Hazardous Waste Code Determination for Rocky Flats Plant Building 374 Sludge Waste Stream (IDCs 007, 803, 807a). INEEL /EXT-01-00517. Rodney Arbon, Sheila Hailey, Joan Connolly, Carolyn Abbott. (INEEL /EXT-01-00517)	Rodney Arbon, Sheila Hailey, Joan Connolly, Carolyn Abbott. TWCP Document Control RWMC.	7/1/2001
P221A	EDF-1175	INEEL Acceptable Knowledge Waste Stream Summary Sheet – Graphite. Bechtel BWT Idaho, LLC. EDF-1175, Rev. 0, July 19, 1999. Rev. 1, April 18, 2000. Rev. 2, June 26, 2000. Rev. 3, July 20, 2000. Rev. 4, September 6, 2000. Rev. 5, May 8, 2002. Rev. 6, August 6, 2002. Rev. 7, January 6, 2003. (EDF-1175)	TWCP Document Control, RWMC; Rev. 0-4 S.M. Hailey, Rev 5-6 B. Tolman, and Rev. 7 C. Marcinkiewicz.	1/6/2008
P222A	EDF-1686	INEEL Acceptable Knowledge Waste Stream Summary Sheet – Light Metals. Rev. 0, October 24, 2000. Rev. 1, May 8, 2002. Rev. 2, August 6, 2002. Rev. 3, January 6, 2003. (EDF-1686)	TWCP Document Control, RWMC; Rev 3 - C. Marcinkiewicz,Rev 1,2 - B. Tolman, Rev 0 S.M. Haeley & B.J. Tolman.	1/6/2003

Implementing Document: MP-TRUW-8.13

TRACKING NUMBER	DOCUMENT NUMBER	DOCUMENT TITLE/DESCRIPTION	DOCUMENT AUTHOR	DOCUMENT DATE
P223A	EDF 1594	INEEL Acceptable Knowledge Waste Stream Summary Sheet – Raschig Rings. Bechtel BWT Idaho, LLC. EDF 1594, Rev. 0. November 7, 2000. EDF 1594, Rev. 1 May 8, 2002. Rev. 2, August 6, 2002. Rev. 3, January 6, 2003. (EDF 1594)	TWCP Document Control, RWMC; Rev. 3 - C. Marcinkiewicz, Rev.1,2 B. Tolman, Rev. 0 - S.M. Hailey & B.J. Tolman	1/6/2008
P224A	EDF- 1926	INEEL Acceptable Knowledge Waste Stream Summary Sheet – Glass (Except Raschig Rings) Rev. 0 March 26, 2001. EDF-1926, Rev. 1 May 8, 2002. Rev. 2, August 6, 2002. Rev. 3, January 6, 2003. (EDF- 1926)	TWCP Document Control, RWMC; Rev. 0 - S.M. Hailey, B.J. Tolman, Rev.1-2 B.J. Tolman, Rev. 3 - C. Marcinkiewicz.	1/6/2003
P225A	EDF 1927	INEEL Acceptable Knowledge Waste Stream Summary Sheet – Filters and Insulation Rev. 0, May 3, 2001. Rev. 1, May 10, 2001. Rev. 2, June 13, 2001. Rev. 3, May 8, 2002. Rev. 4, August 6, 2002. Rev. 5, January 6, 2003. (EDF 1927)	TWCP Document Control, RWMC; Rev. 0,1,2 - B.J. Tolman & S.M. Hailey, Rev. 3,4 - B.J. Tolman, Rev. 5 - C. Marcinkiewicz	1/6/2003
P226A	EDF- 1809	INEEL Acceptable Knowledge Waste Stream Summary Sheet – First/Second Stage Sludge. Rev. 0, January 17, 2001. Rev. 1, May 24, 2001. Rev. 2, May 8, 2002. Rev. 3, August 6, 2002. Rev. 4, August 29, 2002. Rev. 5, January 6, 2003. (EDF-1809)	TWCP Document Control, RWMC; Rev. 0,1 - S.M. Hailey,B.J. Tolman, Rev. 2,3,4 - B.J. Tolman, Rev. 5 - C. Marcinkiewicz.	1/6/2003
P227A	EDF-1609	Plutonium Mass Fractions derived from SGRS Data. Bechtel BWXT Idaho, LLC. EDF-1609. (EDF-1609)	TWCP Document Control RWMC; Yale D. Harker	6/29/2000
P228A	INEEL/EXT-2001-00324	SWEPP PAN Assay System Uncertainty Analysis: Active Mode Measurements of Organic Setups Sludge Waste. Blackwood, Larry G., Yale D. Harker, Teresa R. Meachum. INEEL/EXT-2001-00324, Rev. 0. May 2001. (INEEL/EXT-2001-00324)	Blackwood, Larry G., Yale D. Harker, Teresa R. Meachum; Source: Scott Roesener	5/1/2001
P229A	INEEL/EXT-97-01273	SWEPP PAN Assay System Uncertainty Analysis: Active Mode Measurements of Solidified Aqueous Sludge Waste. Blackwood, Larry G., Yale D. Harker, Teresa R. Meachum. INEEL/EXT-97-01273. April 2000. (INEEL/EXT-97-01273)	Blackwood, Larry G., Yale D. Harker, Teresa R. Meachum. Source: : INEEL Electronic Document Management System	4/1/2000

Implementing Document: MP-TRUW-8.13

TRACKING NUMBER	DOCUMENT NUMBER	DOCUMENT TITLE/DESCRIPTION	DOCUMENT AUTHOR	DOCUMENT DATE
P230A	INEEL/EXT-97-00812	SWEPP PAN Assay System Uncertainty Analysis: Passive Mode Measurements of Graphite Waste. Blackwood, Larry T., Yale D. Harker, Teresa R. Meachum, Woo Y. Yoon.INEEL/EXT-97-00812. (INEEL/EXT-97-00812)	Teresa Meachum, INEEL TRU Waste Program.(Larry G. Blackwood, Yale D. Harker, Teresa R.Meachum, Woo Y. Yoon)	7/1/1997
P231A	INEEL/EXT-98-01215	SWEPP PAN Assay System Uncertainty Analysis: Active Mode Measurements of Graphite Waste. Blackwood, Larry G., Yale D. Harker. INEEL/EXT-98-01215. (INEEL/EXT-98-01215)	Teresa Meachum, INEEL TRU Waste Program. (Blackwood, Larry G., Yale D. Harker)	12/1/1998
P232A	INEEL/EXT-2000-01006	SWEPP PAN Assay System Uncertainty Analysis: Passive and Active Mode Measurements of Combustible Waste. Blackwood, Larry G., Yale D. Harker, Teresa R Meachum, Woo Y Yoon. INEEL/EXT-2000-01006, Rev 0, November 2000. INEEL/EXT-2000-01006, Rev 1. October 2001. (INEEL/EXT-2000-01006)	Electronic Document Management System. Blackwood, Larry G., Yale D. Harker, Teresa R Meachum, Woo Y Yoon	10/20/2008
P233A	INEEL/EXT-2001-01001	SWEPP PAN Assay System Uncertainty Analysis: Passive and Active Mode Measurements of Filter Waste. Blackwood, Larry G., Yale D. Harker, Teresa R. Meachum, Woo Y Yoon. INEEL/EXT-2001-01001. January 2001. (INEEL/EXT-2001-01001)	INEEL Electronic Document Management System: Blackwood, Larry G., Yale D. Harker, Teresa R. Meachum, Woo Y Yoon	1/1/2001
P234A	INEEL/EXT-2000-00969	SWEPP PAN Assay System Uncertainty Analysis: Passive and Active Mode Measurements of Glass Waste. Blackwood, Larry G., Yale D. Harker, Teresa R Meachum, Woo Y Yoon. INEEL/EXT-2000-00969. July 2000. (INEEL/EXT-2000-00969)	Teresa Meachum, TRU Waste Program; Blackwood, Larry G., Yale D. Harker, Teresa R Meachum, Woo Y Yoon.	7/1/2000
P235A	INEEL/EXT-2000-01000	SWEPP PAN Assay System Uncertainty Analysis: Passive and Active Mode Measurements of Raschig Rings Waste. Blackwood, Larry G., Yale D. Harker, Teresa R Meachum, Woo Y Yoon. INEEL/EXT-2000-01000. (INEEL/EXT-2000-01000)	Blackwood, Larry G., Yale D. Harker, Teresa R Meachum, Woo Y Yoon. Source: Teresa Meachum, TRU Waste Program	7/1/2000
P236A	INEEL/EXT-99-00939INEEL/EXT-99-00939	SWEPP PAN Assay System Uncertainty Analysis: Passive and Active Mode Measurements of Mixed Metal Waste. Blackwood, Larry G., Yale D. Harker, Teresa R. Meachum, Woo Y Yoon. INEEL/EXT-99-00939. (INEEL/EXT-99-00939INEEL/EXT-99-00939)	Blackwood, Larry G., Yale D. Harker, Teresa R. Meachum, Woo Y Yoon. source: Teresa Meachum, TRU Waste Program.	10/1/2000

Implementing Document: MP-TRUW-8.13

TRACKING NUMBER	DOCUMENT NUMBER	DOCUMENT TITLE/DESCRIPTION	DOCUMENT AUTHOR	DOCUMENT DATE
P237A	INEEL/INT-98-01210; EDF-RWMC-1043	Characterization of Wastes Used in the 1991 through 1993 SWEPP Certified Waste Sampling Program. Lockheed Idaho Technologies Company. (INEEL/INT-98-01210; EDF-RWMC-1043)	C. B. Ransom	4/7/1999
P238A	EDF-2657	INEEL Acceptable Knowledge Waste Stream Summary Sheet – Building 374 Sludge. (EDF-2657)	C. Marcinkiewicz	1/6/2003
P239A	RWMC-EDF-942, INEL/INT-97-00214	Disagreement with the Assignment of EPA Hazardous Waste Numbers by the Acceptable Knowledge Document, INEL 96/0280 (RWMC-EDF-942, INEL/INT-97-00214)	D.E. Kudera, M.S. DeHaan	08/12/1997
P240A	EDF-RWMC-840	Document SWEPP NDA Compliance Development. Bechtel BWXT Idaho, LLC. EDF-RWMC-840, Rev. 2, March 6, 2000. Rev. 3, May 10, 2001. Rev. 4, August 6, 2002. (EDF-RWMC-840)	Ed Gulbransen (Rev. 4)BBWI Document Control.	8/6/2002
P241A	EDF-RWMC-843	TWCP WIPP WAC Nondestructive Assay Requirements and QAO Compliance Demonstration. EDF-RWMC-843, Rev. 0, June 25, 1997. Rev. 3, April 20, 2000. Rev. 4, November 29, 2001. (EDF-RWMC-843)	G.K. Becker, H.J. Dahlke, Gary W.Twedell - BBWI Document Control.	11/29/2001
P242A	EDF-RWMC-919	RTR Review Process to Support the Total Uncertainty Evaluation (EDF-RWMC-919)	P. J. Taylor, Y. D. Harker	9/22/1997
P243A	EDF-924	INEEL CH TRU Waste Certification Capabilities Implementation. EDF-924, Rev. 8, November 26, 2001. Rev. 9, April 8, 2002. Rev. 10, June 20, 2002. Rev. 11, July 18, 2002. Rev. 12, September 25. 2002. Rev. 13, March 3, 2003. (EDF-924)	BBWI Document Control. Rev. 10-12 by C.W. Brooks.	3/3/2003
P244A	EDF-973	Zero Matrix Calibration of the SWEPP PAN System. EDF-973, Rev. 3, November 29, 2001. Rev. 4, April 4, 2002. (EDF-973)	Y.D. Harker, G.W. Tweddell. BBWI Document Control.	4/4/2002
P245A	EDF-RWMC-1009	SWEPP Assay System Minimum Detectable Concentration for Solidified Aqueous Sludge Waste Forms. EDF-RWMC-1009. (EDF-RWMC-1009)	Y.D. Harker, G.W. Twedell, L.G.Blackwood, BBWI Document Control	2/2/1998
P246A	EDF 1402	Available Inventory for SWEPP Processing for the 3,100 m3 Project. EDF 1402, Rev. 3, March 7, 2002. Rev. 4, April 19, 2002. Rev. 5, March 14, 2003 (EDF 1402)	D.H. Van Haaften	3/14/2003
P247A	EDF-1769	MDC for Glass, Filters, Mixed Metals, Combustibles. EDF-1769 Rev. 0, December 20, 2000. Rev. 1, April 19, 2002. (EDF-1769)	Yale D. Harker	4/19/2002

Implementing Document: MP-TRUW-8.13

TRACKING NUMBER	DOCUMENT NUMBER	DOCUMENT TITLE/DESCRIPTION	DOCUMENT AUTHOR	DOCUMENT DATE
P248A	EDF 2670	Extension of the Stored Waste Examination Pilot Plant Passive-Active Neutron Drum Assay System Active-Mode Qualification Range to 47 Grams Plutonium Fissile Gram Equivalent for Solidified Inorganic Sludge Wastes. [Document name changed from Rev. 1, "SWEPP Assay Systems."] RWMC EDF 2670, Rev. 1, August 16, 2001. Rev. 2, June 27, 2002. (EDF 2670)	C.W. Brooks, L.G. Blackwood - BBWI Document Control.	6/27/2002
P249A	EDF-2721	WAGS Absolute Calibration, QAO, TMU, and MDC.EDF-2721, Rev. 0, March 15, 2002. Rev. 1, August 1, 2002. Rev. 2, September 3, 2002. (EDF-2721)	J.G. Fleissner, BBWI Document Control.	9/3/2002
P250A	EDF-2986	Generalized MDL-MDC for SWEPP PAN Active Mode. EDF-2986. (EDF-2986)	Y.D. Harker - BBWI Document Control.	2/11/2002
P251A	EDF-3068	Minimum Detectable Concentrations for IDC 004, IDC 700, IDC 801, and IDC 802. EDF-3068. (EDF-3068)	Y.D. Harker - BBWI Document Control.	2/12/2002
P252A	EDF 3107	Minimum Detectable Concentrations for Miscellaneous Cemented Sludges. EDF 3107, Rev. 0, March 13, 2002. Rev. 1, April 11, 2002. (EDF 3107)	Y.D. Harker - BBWI Document Control.	4/11/2002
P253A	EDF-3146	Minimum Detectable Concentrations for IDCs 320, 321, and 339. EDF-3146. (EDF-3146)	Y.D. Harker - BBWI Document Control.	2/19/2002
P254A	EDF-RWMC-1035	SAS Minimum Detectable Concentration for Inorganic Sludge Waste Forms. EDF-RWMC-1035. (EDF-RWMC-1035)	Y.D. Harker, L.G. Blackwood - BBWI Document Control.	7/27/1998
P255A	EDF-1104	Uncertainty Analysis for Non-300 Graphite Codes. EDF-1104. (EDF-1104)	Y.D. Harker, L.G. Blackwood, C.R. Hoffman - BBWI Document Control.	5/5/1999
P256A	EDF-1255	SAS Minimum Detectable Concentration for Mixed Metals Waste Forms. EDF-1255. (EDF-1255)	Yale D. Harker	10/19/1999
P257A	EDF-3147	SWEPP PAN Assay System Uncertainty Analysis: Passive and Active Mode Measurements of Lead-Containing Waste. EDF-3147. (EDF-3147)	Larry G. balckwood - BBWI Document Control.	2/19/2002
P258A	EDF-RWMC-1092	Bias Correction Parameters with Increased Significant Digits for PAN Active Mode Measurements for Graphite Waste. EDF-RWMC-1092. (EDF-RWMC-1092)	Larry G. Blackwood - BBWI Document Control.	4/22/1999

Implementing Document: MP-TRUW-8.13

TRACKING NUMBER	DOCUMENT NUMBER	DOCUMENT TITLE/DESCRIPTION	DOCUMENT AUTHOR	DOCUMENT DATE
P259A	INEEL/EXT-01-01204	Uncertainty Analysis of SWEPP Gamma-Ray Spectrometer System Absolute Plutonium Mass Measurements. Larry G. Blackwood, Yale D. Harker, Teresa R. Meachum, and E. Wayne Killian. INEEL/EXT-01-01204. (INEEL/EXT-01-01204)	Larry G. Blackwood, Yale D. Harker, Teresa R. Meachum, E. Wayne Killian	11/1/2001
P260A	INEEL/EXT-01-01392	SWEPP PAN Assay System Uncertainty Analysis: Active Mode Measurements of Plastic Waste. INEEL/EXT-01-01392. Larry G. Blackwood, Yale D. Harker, and Teresa R. Meachum. (INEEL/EXT-01-01392)	Larry G. Blackwood, Yale D. Harker, and Teresa R. Meachum - BBWI Document Control.	11/1/2001
P261A	INEEL/EXT-01-01590	SWEPP PAN Assay System Uncertainty Analysis: Active Mode Measurements of Solidified Organics and Special Setups Waste. INEEL/EXT-01-01590. Larry G. Blackwood, Yale D. Harker, and Teresa R. Meachum. (INEEL/EXT-01-01590)	Larry G. Blackwood, Yale D. Harker, and Teresa R. Meachum - BBWI Document Control.	12/1/2001
P262A	INEEL/EXT-01-01614	SWEPP PAN Assay System Uncertainty Analysis: Active Mode Measurements of Miscellaneous Cemented Waste. INEEL/EXT-01-01614. Larry G. Blackwood, Yale D. Harker, and Teresa R. Meachum. December 2001. (INEEL/EXT-01-01614)	Larry G. Blackwood, Yale D. Harker, and Teresa R. Meachum - BBWI Document Control.	
P263A		Radioassay Total Uncertainty Process using Modified Statistical Sampling Approach. MCP-2990, Rev. 2, February 29, 2000. Rev. 3, March 22, 2001. Rev. 4, November 20, 2002.	BBWI Document Control.	11/2/2009
P264A	MCP-2991	Radioassay Total Uncertainty Process using Statistical Sampling Approach. MCP-2991, Rev. 2, February 29, 2000. Rev. 3, March 22, 2001. Rev. 4, November 8, 2001. Rev. 5, June 5, 2002. Rev. 6, TBD. (MCP-2991)	BBWI Document Control.	6/5/2020
P265A	PLN-579	Certification of INEEL Contact-Handled Stored Transuranic Waste. PLN-579, Rev. 2, April 26, 2001. Rev. 3, April 4, 2002. Rev. 4, May 17, 2002. Rev. 5, July 15, 2002. (PLN-579)	M. Sherick - BBWI Document Control.	7/15/2002
P266A	INEEL/EXT-01-01365	SWEPP Absolute Gamma Analysis Package (SAP) Software Requirements Specification. E. W. Killian. INEEL/EXT-01-01365, Rev. 1. (INEEL/EXT-01-01365)	E.W. Killian - BBWI Document Control.	2/1/2002

Implementing Document: MP-TRUW-8.13

TRACKING NUMBER	DOCUMENT NUMBER	DOCUMENT TITLE/DESCRIPTION	DOCUMENT AUTHOR	DOCUMENT DATE
P267A	INEEL/EXT-01-01366	SWEPP Absolute Analysis Package (SAP) Software Design Description. E. W. Killian. INEEL/EXT-01-01366, Rev. 1. (INEEL/EXT-01-01366)	E.W. Killian - BBWI Document Control.	2/1/2002
P268A	INEEL/EXT-01-01367	SWEPP Absolute SWEPP Absolute Analysis Package (SAP) Calculation Methods. E. W. Killian, C. V. McIsaac. INEEL/EXT-01-01367, Rev. 0. (INEEL/EXT-01-01367)	E. W. Killian, C. V. McIsaac - BBWI Document Control.	2/1/2002
P269A		SWEPP Absolute Analysis Package (SAP) Software Test Plan and Report. C. R. Hoffman. INEEL/INT-01-01368, Rev. 2, February 2002. Rev. 3, April 02, 2002.	C. R. Hoffman - BBWI Document Control.	4/2/2002
P270A	INEEL/INT-01-01369	SWEPP Absolute Analysis Package (SAP) Users Guide. E. W. Killian. INEEL/INT-01-01369, Rev. 0. (INEEL/INT-01-01369)	E. W. Killian - BBWI Document Control.	2/1/2002
P271A	INEEL/INT-01-01537	User Guide for the Stand-Alone Version of SRAC. E. W. Killian. INEEL/INT-01-01537, Rev. 0. (INEEL/INT-01-01537)	E. W. Killian - BBWI Document Control.	1/1/2002
P272A	INEEL/EXT-98-00957	SWEPP Assay System Version 3.2 Software Requirements Specification. Larry V. East. INEEL/EXT-98-00957. Rev. 0, March 2000. Rev. 1, (INEEL/EXT-98-00957)	Larry V. East - BBWI Document Control.	5/18/2020
P273A	INEEL/EXT-98-00958	SWEPP Assay System Version 3.2 Design Description. Larry V. East. INEEL/EXT-98-00958. (INEEL/EXT-98-00958)	Larry V. East - BBWI Document Control.	3/1/2000
P274A	INEEL/INT-2000-00289	SWEPP Gamma Analysis Package (SGAP) Software Requirements Specification. L. Van Ausdeln, E. W. Killian, and L. O. Johnson. INEEL/INT-2000-00289, Rev. 0. (INEEL/INT-2000-00289)	L. Van Ausdeln, E. W. Killian, and L. O. Johnson - BBWI Document Control.	9/1/2000
P275A	TPR-1719	Calibration of SWEPP Radioassay Systems. TPR-1719, Rev. 16, November 30, 2001; Rev. 17, May 20, 2002; Rev. 18, May 20, 2002; Rev. 19, November 15, 2002. (TPR-1719)	BBWI Document Control.	11/1/2009
P276A	EDF-2019	IDC 339 Mass Attenuation Coefficient Table for SGAP. EDF-2019. (EDF-2019)	G.L. Jones - BBWI Document Control.	4/2/2002
P277A	EDF-3154	Generalized MDL/MDC for SWEPP Absolute Analysis Package (SAP) when Analyzing Spectra from the SWEPP Gamma-Ray Spectrometer (SGRS). EDF-3154, Rev. 0, April 2, 2002. Rev. 1, August 2, 2002. (EDF-3154)	Yale D. Harker - BBWI Document Control.	8/2/2009
P278A	EDF-3156	TWCP WIPP WAC Nondestructive Assay QAO Compliance Testing of the SWEPP Absolute Analysis Package. EDF-3156, Rev. 0, March 11, 2002. Rev. 1, April 2, 2002. (EDF-3156)	G.W. Twedell - BBWI Document Control.	4/2/2002

Implementing Document: MP-TRUW-8.13

TRACKING NUMBER	DOCUMENT NUMBER	DOCUMENT TITLE/DESCRIPTION	DOCUMENT AUTHOR	DOCUMENT DATE
P279A	EDF-1994	Uncertainty Analysis Gamma-Ray Spectrometer System Absolute Plutonium Mass Measurements. EDF-1994. April 2, 2002 (EDF-1994)	BBWI Document Control.	4/2/2002
P280A	EDF-3017	WAGS Absolute Technical Review Process. EDF-3017, Rev. 0, April 2, 2002. Rev. 1, July 18, 2002. Rev. 2, August 5, 2002. (EDF-3017)	BBWI Document Control.	8/5/2002
P281A	CI-IDA-NDA-013	WAGS Absolute System Acceptance Test Report. CI-IDA-NDA-013. (CI-IDA-NDA-013)	BBWI Document Control.	12/10/2001
P282A	EDF-2891	INEEL Acceptable Knowledge Waste Stream Summary Sheet–Combustibles. Bechtel BWXT Idaho, LLC. (EDF-2891)	C. Marcinkiewicz	1/6/2003
P283A	EDF-2944	INEEL Acceptable Knowledge Waste Stream Summary Sheet–Plastics. Bechtel BWXT Idaho, LLC (EDF-2944)	C. Marcinkiewicz	01/06/2003
P284A	CCN 29583/INW169.001	Waste Stream Profile Form INW169.001-Combustibles and Transmittal Letter (CCN 29583) from Thomas Monk to Jeff Cotton, Westinghouse TRU Solutions LLC. (CCN 29583/INW169.001)	For CCN 29583 - Thomas Monk;BBWI Document Control.	2/1/2002
P285A	INW198.001	Waste Stream Profile Form INW198.001-Plastics and Transmittal Letter (CCN 29583 from Thomas Monk to Jeff Cotton, Westinghouse TRU Solutions LLC. (INW198.001)	CNN 29583 - Thomas Monk; BBWI Document Control	2/1/2002
P286A	EDF-2722	INEEL Acceptable Knowledge Waste Stream Summary Sheet-Miscellaneous Cemented Sludges. Bechtel BWXT Idaho, LLC. EDF-2722, Rev. 1, April 11, 2002. Rev. 2, August 6, 2002. Rev. 3, August 29, 2002. Rev. 4, January 6, 2003. (EDF-2722)	Bechtel BWXT Idaho, LLC	1/6/2003
P287A	INEEL/EXT-02-00112	Characterization of Rocky Flats Plant Building Miscellaneous Cemented Sludge Waste Stream (IDCs 292 and 807b) (INEEL/EXT-02-00112)	Sheila Hailey, Joan Connolly, Carolyn Abbott, Christine Gomez, and Paul Gomez	3/1/2002
P288A	INW222.001	Waste Stream Profile Form INW222.001-Miscellaneous Cemented Sludges, Transmittal Letter (CCN 31196) to Jerry L. Wells, U.S. DOE, and WSPF Update for WIPP Operating Record (2/19/03) (INW222.001)	Thomas Monk	4/10/2002
P289A	EDF 1180	Waste Stream Profile Form and Associated Evaluations for IDC 300. EDF 1180. (EDF 1180)	S.M. Hailey - BBWI Document Control.	4/18/2000

Implementing Document: MP-TRUW-8.13

TRACKING NUMBER	DOCUMENT NUMBER	DOCUMENT TITLE/DESCRIPTION	DOCUMENT AUTHOR	DOCUMENT DATE
P290A	N/A	Disposition of Ash Residue Material from the 1969 Building 776 Fire at the Rocky Flats Environmental Technology Site. Prepared by IT Corporation for Safe Sites of Colorado. Cameron J. Freiboth and Frank E. Gibbs, PhD.	Cameron J. Freiboth and Frank E. Gibbs, PhD.	2/10/2000
P291A	EDF-RWMC-1045	234U Activity with Respect to Total Alpha Activity. EDF-RWMC-1045, Rev. 1. (EDF-RWMC-1045)	Cecilia R. Hoffman	3/17/1999
P292A	MCP-1815	RWMC Data Generation Level Data Validation. MCP-1815, Rev. 19, May 20, 2002. Rev. 20, August 7, 2002. Rev. 21, November 20, 2002. (MCP-1815)	BBWI Document Control.	11/20/2002
P293A	INEEL/INT-2000-00288	Description of SWEPP Gamma Analysis Package (SGAP) Software Calculation Methods. INEEL/INT-2000-00288, Rev. 0. (INEEL/INT-2000-00288)	C.V. McIsaac, E.W. Killian, L.O. Johnson - BBWI Document Control.	9/1/2000
P294A	INEEL/EXT-02-00287	SWEPP PAN Assay System Uncertainty Analysis: Passive and Active Mode Measurements of Firebrick Waste. INEEL/EXT-02-00287, Rev. 0. (INEEL/EXT-02-00287)	Larry G. Blackwood, Yale D. Harker, Teresa R. Meachum	3/1/2002
P295A	EDF-2059	SWEPP PAN Assay System Uncertainty Analysis: Passive and Active Mode Measurements of Firebrick Waste. EDF-2059, Rev. 0. (EDF-2059)	Larry G. Blackwood - BBWI Document Control.	5/1/2002
P296A	EDF-1553	SWEPP PAN Assay System Uncertainty Analysis: Active Mode Measurements Of Lead-Miscellaneous Cemented Waste. EDF-1553, Rev. 0. (EDF-1553)	Larry G. Blackwood - BBWI Document Control.	6/28/2002
P297A	EDF-2957	Surrogate Matrix Response Evaluation For The SWEPP PAN System. EDF-2957, Rev. 1. (EDF-2957)	C.V. McIsaac, G.W. Twedell - BBWI Document Control.	4/19/2002
P298A	SDD-105	Waste Assay Gamma-Ray Spectrometer (WAGS) Absolute System Description. SDD-105, Rev. 0. (SDD-105)	BBWI Document Control.	4/5/2002
P299A	EDF-2775	Overview of SAS V3.3 Software Changes. EDF-2775, Rev. 0. (EDF-2775)	G.L. Jones, J.E. Brasler - BBWI Document Control.	2/7/2002
P300A	INEEL/INT-2000-00290	SWEPP Gamma Analysis Package (SGAP) Software Test Plan and Report. INEEL/INT-2000-00290, Rev. 1. (INEEL/INT-2000-00290)	L.A. Van Ausdeln, E.W. Killian, L.O. Johnson - BBWI Document Control.	1/1/2001
P301A	INEEL/EXT-2000-00287	SWEPP Gamma Analysis Package (SGAP) Software Design Description. INEEL/EXT-2000-00287, Rev. 0. September 2000 (INEEL/EXT-2000-00287)	E.W. Killian, C. V. McIsaac	9/1/2000
P302A	EDF-2018	Effect of Background on SGRS Assay Results and the Determination of Default Isotopic LLDs for the SGRS. EDF-2018, Rev. 0. (EDF-2018)	Y.D. Harker - BBWI Document Control.	8/2/2002

Implementing Document: MP-TRUW-8.13

TRACKING NUMBER	DOCUMENT NUMBER	DOCUMENT TITLE/DESCRIPTION	DOCUMENT AUTHOR	DOCUMENT DATE
P303A	RWMC-EDF-363	Description of the SWEPP Certified Waste Sampling Program. RWMC-EDF-363, Rev. 0, May 19, 1989. Rev. 7, April 16, 1997. Rev. 8, Not Dated. Rev. 9, Not Dated. Rev. 11, July 28, 1998. Rev. 12, April 20, 1999. Rev. 13, Not Dated. Rev. 14, March 28, 2000. Rev. 15, June 28, 2000. Rev. 16, December 5, 2000. Rev. 17, August 2, 2001. Rev. 18, August 2, 2002. Rev. 19, August 29, 2002. Rev. 20, October 22, 2002. Rev. 21, November 20, 2002. (RWMC-EDF-363)	J.J. Einerson (Rev 21) - BBWI Document Control and EDMS.	11/20/2002
P304A		Transuranic Waste Sampling Plan for the Idaho National Engineering and Environmental Laboratory. EDF-909. Rev. 0, November 18, 1996. Rev. 1, January 12, 1998. Rev. 2, September 3, 1998. Rev. 3, November 9, 2000.	J.J. Einerson, R.E. Arbon - BBWI Document Control.	11/9/2000
P305A	EDF-2981	Waste Stream Profile Form INW252.001-Leaded Rubber Gloves and Aprons; EDF-2981, Rev. 0, Waste Stream Summary Sheet–Leaded Rubber Gloves and Aprons (10/02/02); and Transmittal Letter (CCN 36785) from Thomas Monk to Jerry Wells. October 15, 2002. EDF-2981, Rev. 1, January 6, 2003. (EDF-2981)	Thomas Monk	10/15/2002
P306A	EDF-3019	Waste Stream Profile Form INW161.001-Fire Brick/Coarse Fire Brick; EDF-3019, Waste Stream Summary Sheet–Fire Brick/Coarse Fire Brick; and Transmittal Letter (CCN 35971) to Jerry Wells. (EDF-3019)	Thomas Monk and C. J. Marcinkiewicz	1/6/2003
P307A	EDF-RWMC-369	Hazardous Waste Constituents of INEL Contact-Handled Stored Transuranic Waste (EDF-RWMC-369)	D. E. Kudera	05/19/1989
P308A	RF124.01	RFETS Waste Stream Profile Form for Leaded Drybox Gloves, RF124.01, and associated Characterization Information Summaries and Waste Stream Summaries. (RF124.01)	BBWI Document Control.	8/14/2002
P309A	EDF-RWMC-759	Argonne National Laboratory-East Remote Handled Waste (EDF-RWMC-759)	W. Mahlon Heileson	08/29/1994
P310A	EDF-RWMC-421	EPA Hazardous Waste Codes Found in INEL Stored TRU Waste Content Codes (EDF-RWMC-421)	EG&G Idaho, Inc.	04/01/1994

Implementing Document: MP-TRUW-8.13

TRACKING NUMBER	DOCUMENT NUMBER	DOCUMENT TITLE/DESCRIPTION	DOCUMENT AUTHOR	DOCUMENT DATE
P311A	EDF-RWMC-1051	Statistical Sampling Plan for Verifying Characterization of Drums with "Unknown" Contents. EDF-RWMC-1051, Rev. 0. (EDF-RWMC-1051)	C.L. Atwood - BBWI Document Control.	4/8/1999
P312A	INEEL/INT-99-00081, LMITCO.	Characterization of Wastes Generated at Argonne National Laboratory-West with IDCs of 161, 162, and 163 (INEEL/INT-99-00081, LMITCO.)	C. B. Ransom	04/07/1999
P313A	INEEL/INT-99-00226, LMITCO, EDF -RWMC-1062,	Characterization of Wastes Generated at Mound Laboratory with IDCs of 825, 847, and 848. (INEEL/INT-99-00226, LMITCO, EDF-RWMC-1062,)	C. B. Ransom	4/7/1999
P314A	EDF-RWMC-452	Retrieval and Disposition of United States Americium from Mexico. (EDF-RWMC-452)	RWMC	03/19/1991
P315A	EDF-RWMC-332	TRU Waste Assessment (for the J.C. Haynes TRU Waste Classification). (EDF-RWMC-332)	BBWI	8/10/1088
P316A	EDF-RWMC-1776	Characterization of Containers with Unknowns-Remnant Containers (EDF-RWMC-1776)	C. A. Major	2/12/2001
P317A	EDF-RWMC-1615	Characterization of Containers with Unknowns-Phase IV (EDF-RWMC-1615)	C. A. Major and J. Medeiros	10/2/2000
P318A	EDF-RWMC-1579	Characterization of Containers with Unknowns through Expert Committee Consensus (EDF-RWMC-1579)	C. A. Major, J. Medeiros, R. A. Nesmith, D. M. Hartley	10/02/2000
P319A	WM-F1-81-015	Idaho National Engineering Laboratory Stored Transuranic Waste Characterization: Nonradiological Hazards Identification. (WM-F1-81-015)	T.L. Clements, Jr.	09/00/1981
P320A	INEEL/EXT-99-00575	Characterization Plan for Existing Contact-Handled Waste Containers of Unknowns in RWMC HWMA/RCRA Permitted Storage Inventory. (INEEL/EXT-99-00575)	BBWI Document Control.	8/1/2000
P321A	EDF-2710	Comparison of Real Time Radiography (RTR) and Visual Examination Results of the Stored Waste Examination Pilot Plant Certified Waste Sampling Program, EDF-2710; and the associated RTR-VE Database CD dated 12/11/02. December 2002. (EDF-2710)		12/00/2002
P322A	EDF-3374	Radioassay Data Collected During 3100 Cubic Meter Project. EDF-3374, Rev. 0. January 2003. (EDF-3374)	N/A	1/1/2003
P323A	Course 7,Lesson 10	Course 7: Metals for Nuclear Power. Lesson Ten: Structural Materials. D. W. Lillie, BA, General Electric Research Laboratory (Course 7,Lesson 10)	D. W. Lillie, BA, General Electric Research Laboratory	1958

TRACKING NUMBER	DOCUMENT NUMBER	DOCUMENT TITLE/DESCRIPTION	DOCUMENT AUTHOR	DOCUMENT DATE
P324A	N/A	Marine Strip Material Safety Data Sheet (MSDS). November 26, 1991.	Battelle Columbus West Jefferson files.	11/26/1991
P325A	N/A	The U.S. Government and Battelle, Partners in Nuclear Research, 1943 – Present	Battelle Columbus Laboratories.	1985.
P326A	100-00,101-00	West Jefferson Category 1 and 3 Low-Level Waste Summary. Battelle Columbus Laboratory Decommissioning Project. (100-00,101-00)	Battelle Columbus Laboratory Decommissioning Project	7/25/1997
P327A	N/A	Hot-Laboratory Facility and Summary of Capabilities	Battelle Columbus West	UNKNOWN
P328A	N/A	Decontamination of Battelle Columbus' Plutonium Facility. Final Report to U.S. DOE Chicago.	Ann Rudolph, George Kirsch, and Harley L. Toy.	11/12/1984
P329A	N/A	Finding of No Significant Impact and Environmental Assessment. Battelle Columbus Laboratories Decommissioning Project.	U.S. DOE Chicago Operations Office	06/01/1990
P330A	Microfiche 83-01-0029	Battelle-Columbus 40 Years of Energy Research for the U.S. Government. (Microfiche 83-01-0029)	Battelle Memorial Institute.	1985
P331A	N/A	Battelle Columbus Laboratory Decommissioning Project Baseline.	Battelle Columbus Laboratory - DOE Ohio Field Office, Columbus Environmental Management Project Library.	11/1/1992
P332A	N/A	Interim Guidance on Ensuring that Waste Qualifies for Disposal at the Waste Isolation Pilot Plant. February 13, 1997.	Battelle Columbus West Jefferson files.	02/13/1997
P333A	N/A	Plan for Fully Decontaminating The Battelle Plutonium Laboratory	UNKNOWN	5/1/1978
P334A		Topical Report on Decontamination of Plutonium-Contaminated Glove Boxes	D. E. Stellrecht, D. G. Freas, and J. F. Dettorre	6/1/1979
P335A	N/A	Topical Report on Volume Reduction Experiment (I) At Battelle's Plutonium Facility	J. F. Dettorre, D. G. Freas, and D. E. Stellrecht	2/23/1979
P336A	N/A	Fiscal Year 1978 Summary Report on Decontamination of Battelle-Columbus' Plutonium Facility.	W. J. Madia, J. F. Dettorre, D. G. Freas, and D. E. Stellrecht.	9/28/1979
P337A	Pu-DP-1.4	Stripping Paint From the Interior of Gloveboxes. Quality Assurance Document. Pu-DP-1.4 (Rev. 0). (Pu-DP-1.4)	D. E. Stellrecht	5/22/1978
P338A	Pu-DP-2.4	Loading of TRU-Contaminated Waste In DOT 7A Steel Boxes (ANL-M-III). Quality Assurance Document. Pu-DP-2.4 (Rev. 1) (Pu-DP-2.4)	D. E. Stellrecht.	03/09/1979

Implementing Document: MP-TRUW-8.13

TRACKING NUMBER	DOCUMENT NUMBER	DOCUMENT TITLE/DESCRIPTION	DOCUMENT AUTHOR	DOCUMENT DATE
P339A	Pu-DP-1.6	Retrievable TRU-Contaminated Waste Packaging In Molded Polyethylene-Lined DOT 17C Steel Drums. Quality Assurance Document. Pu-DP-1.6 (Rev. 1) (Pu-DP-1.6)	D. E. Stellrecht.	12/6/1978
P340A	Pu-DP-1.8	Detergent Cleaning and Rinsing of The Interior of Gloveboxes. Quality Assurance Document. Pu-DP-1.8 (Rev. 0) (Pu-DP-1.8)	D. E. Stellrecht.	10/10/1978
P341A	Pu-DP-1.9	Fixation of Residual Radioactive Contamination On Glovebox Interior Surfaces. Quality Assurance Document. (Rev. 0) (Pu-DP-1.9)	J. S. Furr.	10/19/1978
P342A	Pu-DP-4.7, Pu-DP-4.3	Glovebox Volume Reduction Sectioning Procedures. Disconnection of Gloveboxes From Stands. Quality Assurance Documents . Pu-DP-4.7 (Rev. 0) and Pu-DP-4.3 (Rev. 0). (Pu-DP-4.7, Pu-DP-4.3)	D. E. Stellrecht.	11/9/1978
P343A	Pu-DP-4.8	Handling and Packaging of Glovebox Sections for Disposal. Quality Assurance Document. Pu-DP-4.8 (Rev. 0) (Pu-DP-4.8)	D. E. Stellrecht	11/9/1978
P344A	Pu-DP-4.2	Removal and Packaging of Glovebox Exhaust Filters. Quality Assurance Document. Pu-DP-4.2 (Rev. 0 (Pu-DP-4.2)	D. E. Stellrecht.	10/30/1978
P345A	Pu-DP-4.1, Pu-DP-4.9	Construction of Glovebox Volume Reduction Tents. Dismantling of Glovebox Volume Reduction Tent. Quality Assurance Documents. Pu-DP-4.1(Rev. 0, November 9, 1978; Rev. 1 March 7, 1979) and Pu-DP-4.9 (Rev. 0, November 10, 1978). J. Wissinger and D. E. Stellrecht. November 10, 1978. (Pu-DP-4.1, Pu-DP-4.9)	J. Wissinger and D. E. Stellrecht	3/7/2001
P346A	Pu-DP-4.4, Pu-DP-4.5	Health Physics Procedures for Entering Tent Area III for Volume Reduction of Gloveboxes. Procedures for Exiting Glovebox Volume Reduction Tent Areas III, II, and I. Quality Assurance Documents (Pu-DP-4.4, Pu-DP-4.5)	J. Wissinger - Microfiche 83-01-0029 attached to Decontamination of Battelle-Columbus' Plutonium Facility, source document P033.	11/16/1978
P347A	Pu-DP-7, Pu-DP-8, Pu-DP-9	Ceiling Tile and Supporting Framework Removal and Packaging As Low Level Radioactive Waste. Glovebox Exhaust Systems Removal and Packaging as Low Level Radioactive Waste. Gas and Liquid Supply and Electrical Systems Removal and Packaging as Low Level Radioactive Waste. Quality Assurance Documents. (Pu-DP-7, Pu-DP-8, Pu-DP-9)	C. G. Postle and B. E. White - Microfiche 83-01-0029 attached to Decontamination of Battelle-Columbus' Plutonium Facility, source document P033.	2/19/1980

Implementing Document: MP-TRUW-8.13

TRACKING NUMBER	DOCUMENT NUMBER	DOCUMENT TITLE/DESCRIPTION	DOCUMENT AUTHOR	DOCUMENT DATE
P348A	Pu-DP-1.5 and Pu-DP-7.0	Preparation of Items To Be Assayed Using The Random Source Interrogation System. Operation of The Random Source Interrogation System. Quality Assurance Documents. (Pu-DP-1.5 and Pu-DP-7.0)	William R. Mouser.	3/13/1979
P349A	Pu-DP-3.2	Operation of the Davidson 1056 Multichannel Analyzer for Assaying Contaminated Gloveboxes. Quality Assurance Documents. (Pu-DP-3.2)	William R. Mouser and D. E. Stellrecht	5/2/1979
P350A	DOE/EA-0092	Environmental Assessment, Decommissioning and Decontamination Program, Battelle Plutonium Facility (DOE/EA-0092)	U.S. Department of Energy, Battelle Memorial Institute Columbus Division	9/1/1979
P351A	N/A	Renewal Application for Combined Special Nuclear Material and Byproduct License. Section 2, Plutonium Laboratory	Battelle Columbus Laboratories.	9/1/1977
P352A	N/A	Plutonium Procedures Manual	Battelle Memorial Institute. Edited by Harley L. Toy	7/1/1969
P353A	ANL-OHS/HP-85-103	Post-Remedial-Action Radiological Survey Report for The Plutonium Facility of The Battelle Memorial Institute, Columbus Division, West Jefferson Complex, West Jefferson, Ohio. (ANL-OHS/HP-85-103)	Occupational Health and Safety Division. health Physics Section. Argonne National Laboratory, Argonne, Illinois	6/1/1982
P354A	WM-F1-82-021	Content Code Assessments for INEL Contact-Handled Stored Transuranic Wastes. (WM-F1-82-021)	Thomas L. Clements, Jr. for Nuclear Fuel Cycle & Waste Management Division. DOE Idaho Operations Office	10/01/1982
P355A	NS-MS-1	Standards Preparation for Random Driver Plutonium Monitor Calibration (Standards Pu-RDS-1, -2, -3, -4). Quality Assurance Document. NS-MS-5.1 (NS-MS-1)	D. E. Stellrecht.	12/5/1978
P356A	WM-F1-81-015	Idaho National Engineering Laboratory Stored Transuranic Waste Characterization. WM-F1-81-015. T. L. Clements. EG&G Idaho, Inc (WM-F1-81-015)	Idaho National Engineering Laboratory Stored Transuranic Waste Characterization. WM-F1-81-015. T. L. Clements. EG&G Idaho, Inc	09/01/1981
P357A	TCP-98-04	Building JN-4 Plutonium Laboratory Acceptable Knowledge Document. TCP-98-04, Rev. 0. (TCP-98-04)	Prepared by K. Peters, Wastren, Inc.	11/1/1998

Implementing Document: MP-TRUW-8.13

TRACKING NUMBER	DOCUMENT NUMBER	DOCUMENT TITLE/DESCRIPTION	DOCUMENT AUTHOR	DOCUMENT DATE
P358A	EDF-3395	Summary RTR Data Collected During 3,100 m3 Project (EDF-3395)		2/3/2003
P359A	EDF-3396	Summary HSG Data Collected During 3,100 m3 Project. EDF-3396, Rev. 0. (EDF-3396)	C. Marcinkiewicz	2/3/2003
P360A	EDF-922	Identification of Transuranic Waste Streams. EDF-922. Rev. 1, July 9, 2002. Rev. 2, (EDF-922)	C.K. Abbott	12/18/2002
P361A	EDF-803	Chemical Constituents in Transuranic Storage Area (TSA) Waste. EDF-803, Rev. 0. June 12, 1995. Rev. 1, July 10, 1996. Rev. 2. August 12, 1997. Rev. 3. April 4, 1998. Rev. 4. October 30, 2000. Rev. 5. September 17, 2001. Rev. 6. August 1, 2002. Rev. 7. December 18, 2002. (EDF-803)	INEEL	12/18/2002
P362A	DOE/WIPP-02-3122	Contact-Handled Transuranic Waste Acceptance Criteria for The Waste Isolation Pilot Plant, Revision 0.1, DOE/WIPP-02-3122, July 25, 2002. Revision 2, November 15, 2004. (DOE/WIPP-02-3122)		11/15/2004
P363A	INEEL/INT-97-00919	EDF-980, Radiography and Visual Examination Results of the Stored Waste Examination Pilot Plant Certified Waste Sampling Program for Fiscal Years 1995 and 1996. (INEEL/INT-97-00919). (INEEL/INT-97-00919)	C. Loehr	
P364A	INEL-95/194 (RWMC EDF# 837)	Estimated Earthen and Geofabric Covered TRU Waste Inventory in the TSA at Radioactive Waste Management Complex (RWMC) (INEL-95/194 (RWMC EDF# 837))	J. R. Wixson	08/24/1995
P365A	INEL-95/0412	Waste Description Information for Transuranically-Contaminated Wastes Stored at the Idaho National Engineering Laboratory (includes Appendices A and B documents and a letter from John H. Kolts, DOE-ID to Frank Yaklich, BNFL Inc). (INEL-95/0412)	B. D. Raivo, G. K. Becker, T. H. Smith, and G. L. Anderson	12/01/1995
P366A	INEEL/EXT-99-00575	Characterization Plan for Existing Contact-Handled Waste Containers of Unknowns in RWMC HWMA/RCRA Permitted Storage Inventory. INEEL/EXT-99-00575. (INEEL/EXT-99-00575)	W. Mahlon Heileson	8/1/2000
P367A	9257	Procedure for Packaging and Handling Pu Waste and Residue Drums. (9257)	Dow Chemical USA	3/29/1974
P368A	INEL-96/0280	Acceptable Knowledge Document for INEEL Stored Transuranic Waste - Rocky Flats Plant Waste (INEL-96/0280)	INEEL Bechtel BWXT Idaho, LLC	02/28/2003
P369A	CHOP – 9248-80-03.	Pu Recovery Processing System. CHOP – 9248-80-03. (CHOP – 9248-80-03.)	W. H. James - Rockwell International, Energy Systems Group.	5/1/1980

Implementing Document: MP-TRUW-8.13

TRACKING NUMBER	DOCUMENT NUMBER	DOCUMENT TITLE/DESCRIPTION	DOCUMENT AUTHOR	DOCUMENT DATE
P370A	CO-1073-A	Packaging and Handling Plutonium Waste and Residues (U) (CO-1073-A)	Rocky Flats	8/8/1977
P371A	CO-4034-A	Packaging Wastes for Shipment Off-Site (U). (CO-4034-A)	RF	9/2/1977
P372A	WO-4034-A	Packaging Wastes for Shipment Off-Site (U) (WO-4034-A)	Rocky Flats	8/16/1985
P373A	N/A	Historical Release Report (HRR) for Buildings 371, 444, 447, 460, 707, 771, 776/777, 881, 883, and 991. EG&G Rocky Flats, Inc. November 1994.	Environmental Restoration Facilities Operations Management, EG&G Rocky Flats, Inc.	11/1/1994
P374A	n/a	RWMC/AMWTP site map (n/a)	AMWTP	
P375A	BNFL-5232-RPT-TRUW-01	Subpopulation Container Selection for RCRA Analyses. R. E. Arbon, J. J. Einerson, P. Carson, and T. R. Gatliffe. BNFL-5232-RPT-TRUW-01, Rev.0. (BNFL-5232-RPT-TRUW-01)	R.E. Arbon, J.J. Einerson, P. Carson, T.R. Gatliffe	8/26/2002
P376A	MD-21824	Technical Manual MD-21824, Issue 2 – Assay of Pu-238 Contaminated Waste In Boxes. (MD-21824)	Authorization: Richard K. Blauvelt, Tech. Resp. A.R. Campbell	8/28/1984
P377A	MD-21912	Technical Manual MD-21912, Issue 1 – Measurement Control Procedures: Segmented Drum Assay System. (MD-21912)	Tech. Resp. Allen R. Campbell - Source obtained from Bill Franz, LATA.	9/30/1986
P378A	MD-21825	Technical Manual MD-21825, Issue 1 – Assay of Pu-238 Contaminated Waste In Drums. (MD-21825)	Tech. Resp. Allen Campbell	11/28/1984
P379A	MD-70180	Technical Manual – Mound Facility Radioactivity Liquid Waste Disposal, dated 1/1/1981 through October 24, 1984 (MD-70180)		10/24/1984
P380A	N/A	Operable Unit 9 Site Scoping Report: Volume 7 – Waste Management.	Department of Energy, Albuquerque Office	2/1/1993
P381A	MD-70205	Technical Manual TRU Waste Management, dated January 1, 1976 to December 19, 1988. (MD-70205)		12/19/1988
P382A	PD-80026	Determination of Plutonium in WD Sludge/Sand. PD-80026. (PD-80026)	Submitted by: C.T. Bishop, V.M. McAtee	12/3/1990
P383A	MD-70205	Removing Inline Process Waste From PP Building. Manual Number: 70205. Not dated. (MD-70205)		NOT DATED
P384A	MD-20734	Technical Manual – Plutonium Processing-Material Control. (MD-20734)		9/15/1973

Implementing Document: MP-TRUW-8.13

TRACKING NUMBER	DOCUMENT NUMBER	DOCUMENT TITLE/DESCRIPTION	DOCUMENT AUTHOR	DOCUMENT DATE
P385A	MD-10203	Technical Manual - Mound WIPP Certification Program For Newly Generated Contact Handled (CH) Waste (MD-10203)	J. A. Moreley, DOE/DAO (for R.J. Grandfield, DOE/DAO)	04/14/1989
P386A	RPT-PMP-01	Project Management Plan, AMWTP (RPT-PMP-01)	AMWTP	11/01/2009
P387A	INST-OI-34	Non-Facility Visual Examination Operations (INST-OI-34)	AMWTP	Cur date
P388A	INST-OI-24	Packaging Radioactive Waste (INST-OI-24)	AMWTP	Cur Date
P389A	INST-OI-23	Soil Removal Operations (INST-OI-23)	AMWTP	Cur Date
P390A	MP-WM&M-13.2	Satellite Accumulation Areas, Rev. 5, BNFL Inc., MP-WM&M-13.2, 03/31/03. Rev. 6, 02/18/04. Rev. 7, 03/25/04 (MP-WM&M-13.2)	BNFL	3/25/2004
P391A	MP-WM&M-13.3	90-Day Temporary Accumulation Areas, Rev. 5, BNFL Inc., MP-WM&M-13.3 (MP-WM&M-13.3)	AMWTP	Current
P392A	MP-WM&M-13.9	Waste Characterization and Waste Services Management (MP-WM&M-13.9)	AMWTP	Current
P393A	RPT-TRUW-12	Advanced Mixed Waste Treatment Project Waste Stream Designations (RPT-TRUW-12)	AMWTP	CUR DATE
P394A	BNFL-5232-EDF-166	Container Flowsheet (BNFL-5232-EDF-166)	B. Holmes	11/14/2000
P395A	BNFL-5232-1-05-55-001	Process Flow Sheet (Volume Balance (BNFL-5232-1-05-55-001)	A. Hall	8/16/2000
P396A	MP-TRUW-8.1	Certification Plan for INEEL Contact-Handled Transuranic Waste (MP-TRUW -8.1)	AMWTP	12/02/2004
P397A	PRO-1582-PQP/PQR	Aqueous and Oil/Organic Liquid TRU Waste Solidification Method Test Plan and Report. PRO-1582-PQP/PQR, Rev. 0. September 12, 2002 (PRO-1582-PQP/PQR)	Rocky Flats Environmental Technology Site Information Source: Dave Preston	9/12/2002
P398A	RPT-TRUW-07	Determination of Radioisotopic Content in TRU Waste Based on Acceptable Knowledge (RPT-TRUW-07)	AMWTP	Cur date
P399A	RPT-TRUW-05	AMWTP Waste Matrix Code Reference Manual (RPT-TRUW-05)	Generated for the AMWTP Project.	CUR DATE
P400A	RPT-TRUW-06	AMWTP Baseline AK for Newly Generated Waste (RPT-TRUW-06)	AMWTP	CUR DATE

Implementing Document: MP-TRUW-8.13

TRACKING NUMBER	DOCUMENT NUMBER	DOCUMENT TITLE/DESCRIPTION	DOCUMENT AUTHOR	DOCUMENT DATE
P401A	N/A	Material Safety Data Sheet for Aquaset. Fluid Tech, Inc. August 1, 2001	Fluid Tech, Inc. Information Source: Dave Marquardt, AMWTP TRU Program.	8/1/2001
P402A	N/A	BNINW216 First/Second Stage Sludge Waste Stream Profile Package, Rev. 1, September 17, 2004, Change Notice #1, February 2, 2005, Change Notice #2, January 24, 2007, Change Notice #3, April 2, 2008 and Change Notice #4, August 6, 2010	AMWTP and CBFO	03/08/2004
P403A	INST-FOI-23	Special Case Waste Glovebox Operations (INST-FOI-23)	AMWTP	Current
P404A	MP-EC&P-7.10	Spill Response Procedure (MP-EC&P-7.10)	AMWTP	variable
P405A	INST-FOI-21	Drummed Waste Handling Operations (INST-FOI-21)	AMWTP	Current
P406A	RPT-ESH-014	Chemical Compatibility Evaluation of Wastes for the Advanced Mixed Waste Treatment Project (RPT-ESH-014)	AMWTP (N. Brill approval)	02/17/2009
P407A	INST-OI-12	Real-Time Radiography Operations (Drum) (INST-OI-12)	AMWTP (C. Sisson approval)	01/28/2009
P408A	INST-OI-41	Real-Time Radiography Operations (Box) (INST-OI-41)	AMWTP (C. Sisson approval)	CUR DATE
P409A	MP-TRUW-8.25	Random Selection of Containers for Headspace Gas and Solids Sampling and Analysis. (MP-TRUW-8.25)	AMWTP	3/12/2008
P410A	BNFL-5232-MP-WM&M-13.10	General Sampling, Rev. 4, BNFL-5232-MP-WM&M-13.10, 09/13/04 (BNFL-5232-MP-WM&M-13.10)	BNFL, Inc. Information Source: Penny Pink	9/13/2004
P412A	BNFL-5232-INST-FOI-26	AMWTF Waste Receipt and Storage, Rev. 10, BNFL-5232-INST-FOI-26, 12/21/04 (BNFL-5232-INST-FOI-26)	BNFL, Inc. Information Source: Martin Wheeler	12/21/2004
P413A	INST-OI-16	Drum Coring Operations (INST-OI-16)	AMWTP (C. Sisson approval)	CUR DATE
P414A	INST-FOI-20	Supercompactor and Post-Compaction Operations (INST-FOI-20)	AMWTP	CUR DATE
P415A	INST-FOI-16	Box Line Operations (INST-FOI-16)	AMWTP (G. McCain approval)	CUR DATE
P416A	BNFL-5232-INST-OI-40	Liquid Absorption Operations (BNFL-5232-INST-OI-40)	BNFL, Inc. Information Source: Martin Wheeler	8/11/2004

Implementing Document: MP-TRUW-8.13

TRACKING NUMBER	DOCUMENT NUMBER	DOCUMENT TITLE/DESCRIPTION	DOCUMENT AUTHOR	DOCUMENT DATE
P417A	RPT-TRUW-04	Acceptable Knowledge Document for the Battelle Columbus Laboratories, Building JN-4 Plutonium Laboratory (RPT-TRUW-04)	AMWTP	N/A
P418A	AMWTP-RPT-TRUW-13	Acceptable Knowledge Document for INEEL Stored Transuranic Waste – Mound Plant Waste (AMWTP-RPT-TRUW-13)	AMWTP	CURR. DATE
P419A	EDF-2138	Engineering Design File for 83-Gal Recovery-Retrieval List. (EDF-2138)	INEEL, RWMC	7/18/2002
P420A	BNINW218	BNINW218 Building 374 Sludge Waste Stream Profile Package, Rev. 1 September 17, 2004, Change Notice #1, February 2, 2005, Change Notice # 2, June 14, 2007 and Change Notice # 3, April 2, 2008 (BNINW218)	AMWTP	04/02/2008
P421A	BNFL-5232-RPT-TRUW-21	Evaluation of Characterization Data Associated with 74 AMWTP Containers of Rocky Flats First/Second Stage Sludge Waste (BNFL-5232-RPT-TRUW-21)	INEEL, BNFL Inc. AMWTP, hard copy report	8/9/2004
P422A	BNFL-5232-RPT-TRUW-22	Evaluation of Characterization Data Associated with 29 AMWTP Containers of Rocky Flats Building 374 Sludge Waste (BNFL-5232-RPT-TRUW-22)	INEEL, BNFL Inc. AMWTP, hard copy report	8/9/2004
P423A	MD-22153	Mound Site Radionuclides By Location, Technical Manual, Issue 3. (MD-22153)	N/A	03/22/2001
P424A	BNFL-5232-RPT-TRUW-19	Lot Population Determination for Waste Stream Profiles BNINW216 and BNINW218 (BNFL-5232-RPT-TRUW-19)	Original lot lists obtained from DOE-ID from BBWI.	7/20/2004
P425A		Material Safety Data Sheets for Oakite 360 L, (May 18, 1992); Oakite Aluminum Cleaner 164, (January 4, 1990); Oakite Dynadet, (March 27, 1992); Oakite Super Rustripper (October 1, 1999).	Oakite Products	N/A
P426S	N/A	Material Safety Data Sheet for Oil-Dri Floor Absorbent.	Oil Dri Corporation of America	07/21/1988
P427A	N/A	Material Safety Data Sheets for Oil Dri. Portage, Broom, & Brush Co,Inc. Date Unknown	N/A	N/A
P428A		Material Safety Data Sheets for Polymer 1192.	Betz Laboratories, Inc.	8/1/1985
P429S	N/A	Material Safety Data Sheet(MSDS) for Portland Cement.	Lone Star Industries, Inc.	08/10/1994
P430A	N/A	Material Safety Data Sheet for Purifloc® A23 Flocculant.	Van Waters & Rogers Inc. National MSDS Repository (Internet)	08/01/1989
P431A	RF107.01	Waste Stream Profile Form RF107.01. TRM Solidified Inorganic Waste. (RF107.01)	RFETS	6/8/2004

Implementing Document: MP-TRUW-8.13

TRACKING NUMBER	DOCUMENT NUMBER	DOCUMENT TITLE/DESCRIPTION	DOCUMENT AUTHOR	DOCUMENT DATE
P432A	RF139.01	Waste Stream Profile Form RF139.01. Solid cemented sludge. (RF139.01)	RFETS	9/20/2004
P433A	INST-FOI-17	Facility Visual Examination Operations (INST-FOI-17)	AMWTP (J. P. Hingston owner)	Current
P435S	RMRS-WIPP-98-100	RFETS Acceptable Knowledge TRU/TRM Waste Stream Summaries (RMRS-WIPP-98-100)	Rocky Flats Environmental Technology Site.	04/21/2005
P436A	RF/RMRS-97-018	RFETS TRU Waste Acceptable Knowledge Supplemental Information (RF/RMRS-97-018)	Rocky Flats Environmental Technology Site	4/21/2005
P437A	N/A	BN835 Solidified Acid/Caustic Waste Stream Profile Package, Change Notice #1, and Change Notice #2	AMWTP, CBFO	04/07/2005
P439A	N/A	BN510 Supercompacted Debris Waste Stream Profile Package, May 26, 2005 Change Notice #1, January 24, 2007, Change Notice #2, July 5, 2007, Change Notice #3, April 2, 2008	AMWTP, CBFO	05/26/2005
P440A		Memorandum from Eric Schweinsberg, TRU Program Manager, AMWTP to Kerry Watson Carlsbad Field Office, "Transmittal of Addendum to Waste Stream Profile BNINW216-EPS-069-2004", August 31, 2004	AMWTP, Eric Schweinsberg	8/31/2004
P441A	DWG-5232-53-9840	Joseph Laurman, BNFL DWG-5232-53-9840, Rev 5 "General Arragnement & Details 110 Gallon Puck Drum" (DWG-5232-53-9840)	Joseph Laurman	6/5/2003
P442A	ICP/EXT-04-00632	Historical Background Report for Lead-Lined Rocky Flats Plant Waste Shipped to the Idaho National Laboratory from 1971 to 1988, compliled by Carolyn Abbott, Ph.D, ICP/EXT-04-00632, Rev. 0, February 2005. (ICP/EXT-04-00632)	Carolyn Abbott	2/1/2005
P443A	ICP/EXT-04-00248	Historical Background Report for Rocky Flats Plant Waste Shipped to the INEEL and Buried in the SDA from 1954 to 1971 (ICP/EXT-04-00248)	North Wind, Inc.	03/00/2005
P444A	Waste Form 54	Rocky Flats Environmental Technology Site Backlog Waste Reassessment Baseline Book, Waste Form 54, Filters and Filter Waste. (Waste Form 54)	Prepared by Rocky Mountain Remediation Services, L.L.C Copy of Controlled Copy provided by RFETS to BBWI.	1/4/1995
P445A	LA-13616-MS	Determination of H2 Diffusion Rates through Various Closures on TRU Waste Bag-Out Bags (LA-13616-MS)	Phillip D. Noll, Jr., E. Larry Callis, and Kirsten M. Norman	06/00/1999

Implementing Document: MP-TRUW-8.13

TRACKING NUMBER	DOCUMENT NUMBER	DOCUMENT TITLE/DESCRIPTION	DOCUMENT AUTHOR	DOCUMENT DATE
P446A	N/A	MSDSs for materials used in the washing of the 100-gallon drums: Multi-Terj 2111, Johnson Diversey, Inc., 2/2/2004; Dubois 737 Rust Inhibitor, Dubois Chemicals, 10/16/1998; No. 2672-5 Contact Cement, Dural Company, Inc., 1/3/1998.	Skolnik Industries, Inc.	MULTIPLE D
P447A	SDS code: 013725-08	Material Safety Data Sheet (MSDS); Quintolubric 888-68 (SDS code: 013725 -08)	Quaker Chemical Corp.	3/26/2004
P448A	RMRS-WIPP-98-100	RFETS Acceptable Knowledge TRU/TRM Waste Stream Summaries. RMRS -WIPP-98-100, Section 7.23, TRM Filter Debris Wastes (D004 – D011, D022, D029, F001, F002, F005, F006, F007, F009, P030, P098, P099, P106, U003, U103, U108), Profile No. RF110.01. (RMRS-WIPP-98-100)	Rocky Flats Environmental Technology Site	5/25/2004
P449A	RMRS-WIPP-98-100	RFETS Acceptable Knowledge TRU/TRM Waste Stream Summaries. RMRS -WIPP-98-100, Section 7.10, TRM Filter Debris Wastes (D022, F001, F002), Profile No. RF110.05. (RMRS-WIPP-98-100)	Rocky Flats Environmental Technology Site	8/8/2003
P450A	N/A	Rocky Flats Environmental Technology Site Backlog Waste Reassessment Baseline Book, Waste Form 24, Metal, April 13, 2005.	Prepared by Rocky Mountain Remediation Services, L.L.C Copy of Controlled Copy provided by RFETS to BBWI.	4/13/2005
P451A	N/A	Rocky Flats Environmental Technology Site Backlog Waste Reassessment Baseline Book, Waste Form 25, Heavy Metals, September 27, 2004.	Prepared by Rocky Mountain Remediation Services, L.L.C Copy of Controlled Copy provided by RFETS to BBWI.	9/27/2004
P452A	RMRS-WIPP-98-100	RFETS Acceptable Knowledge TRU/TRM Waste Stream Summaries. RMRS -WIPP-98-100, Section 7.15, TRM Metal Debris Wastes (D004 – D011, D022, D028, D029, F001, F002, F005, F006, F007, F009, P030, P098, P099, P106, U003, U103, U108), Profile No. RF102.01, Rev. 3, March 21, 2005 (RMRS-WIPP-98-100)	Rocky Flats Environmental Technology Site.	3/21/2005
P453A	RMRS-WIPP-98-100	RFETS Acceptable Knowledge TRU/TRM Waste Stream Summaries. RMRS -WIPP-98-100, Section 7.9, TRM Metal Debris with Lead Shielding (D008), Profile No. RF102.31, Rev. 0, February 13, 2003 (RMRS-WIPP-98-100)	Rocky Flats Environmental Technology Site.	2/13/2003

Implementing Document: MP-TRUW-8.13

TRACKING NUMBER	DOCUMENT NUMBER	DOCUMENT TITLE/DESCRIPTION	DOCUMENT AUTHOR	DOCUMENT DATE
P454A	RMRS-WIPP-98-100	RFETS Acceptable Knowledge TRU/TRM Waste Stream Summaries. RMRS -WIPP-98-100, Section 7.18, TRM Glass Debris Wastes (D005, D008, D009, D022, F001, F002, F005)), Profile No. RF104.01, Rev. 1, April 27, 2004 (RMRS-WIPP-98-100)	RFETS TRU Programs	4/27/2004
P455A	RMRS-WIPP-98-100	RFETS Acceptable Knowledge TRU/TRM Waste Stream Summaries. RMRS -WIPP-98-100, Section 7.1, TRM Leaded Drybox Gloves (D008), Profile No. RF124.01, Rev. 15, July 10, 2002 (RMRS-WIPP-98-100)	RFETS TRU Programs	7/10/2002
P456A	RMRS-WIPP-98-100	RFETS Acceptable Knowledge TRU/TRM Waste Stream Summaries. RMRS -WIPP-98-100, Section 7.22, TRM Leaded Drybox Gloves (D008, D022, D028, F001, F002), Profile No. RF124.02, Rev. 2, May 11, 2004 (RMRS-WIPP-98-100)	RFETS TRU Programs	5/11/2004
P457A	P457A	Material Safety Data Sheets (MSDSs) for all Attapulgite Products, Calcined including FLORCO X. Email from Engelhard National Accounts Representative, Connie Genna, regarding Florco and Auto Dri constituents, 11/15/04. (P457A)	Engelhard Corporation	2/19/2004
P458A	P458A	Material Safety Data Sheet (MSDS) for Insta Gel Plus (P458A)	Packard BioScience B.V., Groningen, The Netherlands.	3/24/2004
P460A	RMRS-WIPP-98-100	RFETS Acceptable Knowledge TRU/TRM Waste Stream Summaries. RMRS -WIPP-98-100, Section 6.15, TRU Resin Wastes (No HWNs), Profile No. RF031.01 (RMRS-WIPP-98-100)	Rocky Flats Environmental Technology Site.	06/14/2004
P461A	BN211	BN211 Filter Debris Waste Stream Profile Package (BN211)	AMWTP and CBFO	9/2/2005
P462A	BN296	BN296 Non-Special Source Metal Waste Stream Profile Package (BN296)	AMWTP and CBFO	9/21/2005
P463A	N/A	Mound Facility Waste Management Site Plan, June 19, 1975, August 15, 1978, November 1, 1981.	Miscellaneous Mound records transmitted to the AMWTP	11/01/1981
P464A		Chemical Engineering, "Isotope-Extraction Process Copes with Radioactive Waste."	Robert F. Althoff	3/11/1968

Implementing Document: MP-TRUW-8.13

TRACKING NUMBER	DOCUMENT NUMBER	DOCUMENT TITLE/DESCRIPTION	DOCUMENT AUTHOR	DOCUMENT DATE
P465A	IDO-10074	Criteria for Packaging Transuranic Waste for Receipt at the Idaho National Engineering Laboratory Radioactive Waste Management Complex Offsite Generated Waste (IDO-10074)	Robert Y. Lowrey	06/00/1980
P466A	N/A	DOE Order 5480.2, dated December 13, 1982; title "Chapter II – Guidance for Managing radioactive Mixed Waste."	Miscellaneous Mound records transmitted to the AMWTP	12/13/1982
P467A	N/A	Status Report on the Cleanup of the SW Building Cave Area	B. R. Kokenge	07/29/1982
P468A	P84-05-494	Soils Agglomeration (P84-05-494)	Miscellaneous Mound records transmitted to the AMWTP	6/8/1984
P469A		Mound Implementation Plan for DOE Order 5820.2, Radioactive Waste Management, Revision 1, dated April 1985. ()	Mound	04/01/1985
P470A	77-04-148	TRU Waste Cyclone Drum Incinerator and Treatment System, Schedule 189c (77-04-148)	Miscellaneous Mound records transmitted to the AMWTP	4/11/1977
P471A	N/A	Radioactive Waste – Radiolytic and Chemically Induced Gas Generation in Radioactive Waste	Miscellaneous Mound records transmitted to the AMWTP	2/6/1976
P472A	MLM-1691	Plutonium-238 Isotopic Fuel Form Data Sheets (MLM-1691)	Miscellaneous Mound records transmitted to the AMWTP	10/31/1969
P473A	N/A	MD Soil Removal Project	Miscellaneous Mound records transmitted to the AMWTP	11/01/1974
P474A		Mound WIPP Certification Program for Newly Generated Contact Handled (CH) Transuranic Waste	Mound	8/1/1983
P475A	N/A	Criticality Procedures PP Analytical Group	Miscellaneous Mound records transmitted to the AMWTP	8/4/1978
P476A	DOE/HWP-12	Hazardous Chemical Waste Defense Management Program, Annual Report FY1985 (DOE/HWP-12)	Miscellaneous Mound records transmitted to the AMWTP	9/26/1985
P477A	N/A	Room Layout Nuclear Non-Destructive Test Facility	Miscellaneous Mound records transmitted to the AMWTP	4/26/1971

Implementing Document: MP-TRUW-8.13

TRACKING NUMBER	DOCUMENT NUMBER	DOCUMENT TITLE/DESCRIPTION	DOCUMENT AUTHOR	DOCUMENT DATE
P478A	N/A	Operating Procedures for the T Building, East Criticality Vault (T-4E), Revised November 1976, August 1978, October 1979, December 1979, and October 1980.	Miscellaneous Mound records transmitted to the AMWTP	10/30/1980
P479A	N/A	Operating Procedures for the T Building, West Criticality Vault-T-2W, August 18, 1978, November 1976	Miscellaneous Mound records transmitted to the AMWTP	08/18/1978
P480A	N/A	Nuclear Criticality Procedures for T-311	Miscellaneous Mound records transmitted to the AMWTP	N/A
P481A	N/A	Nuclear Criticality Procedures for T-310	Miscellaneous Mound records transmitted to the AMWTP	N/A
P482A	N/A	Procedures for Preparing and Handling PuO2 material For Automated Plutonium Assay Samples	Miscellaneous Mound records transmitted to the AMWTP	6/1/1977
P483A	N/A	Criticality Control Procedures for R-127 and R-145	Miscellaneous Mound records transmitted to the AMWTP	11/22/1971
P484A	N/A	Nuclear Safety Procedures for Reactor Fuels Laboratory	Miscellaneous Mound records transmitted to the AMWTP	10/29/1965
P485A	N/A	Criticality Precautions for Processing Uranium-233 in the SW Hot Cell Area	Ralph M. Watrous	8/28/1973
P486A	BN243	BN243 Glass Debris Waste Stream Profile Package (BN243)	AMWTP and CBFO	9/28/2005
P487A	BN252	BN252 Leaded Rubber Debris Waste Stream Profile Package (BN252)	AMWTP and CBFO	10/17/2005
P488A	RMRS-WIPP-98-100	RFETS Acceptable Knowledge TRU/TRM Waste Stream Summaries. RMRS -WIPP-98-100, Section 6.6, TRU LECO Crucible and Crucible Inserts, Profile No. RF006.01 (RMRS-WIPP-98-100)	Rocky Flats Environmental Technology Site	6/24/2002
P489A	RMRS-WIPP-98-100	RFETS Acceptable Knowledge TRU/TRM Waste Stream Summaries. RMRS -WIPP-98-100, Section 6.8, TRU Ceramic Crucible, Profile No. RF008.01 (RMRS-WIPP-98-100)	Rocky Flats Environmental Technology Site	1/24/2005
P490A	RMRS-WIPP-98-100	RFETS Acceptable Knowledge TRU/TRM Waste Stream Summaries. RMRS -WIPP-98-100, Section 7.5, TRM Firebrick debris (D004-D011, F001, F002, F005), Profile No. RF115.01, Rev. 16, September 11, 2000 (RMRS-WIPP-98 -100)	RFETS	09/11/2000

Implementing Document: MP-TRUW-8.13

TRACKING NUMBER	DOCUMENT NUMBER	DOCUMENT TITLE/DESCRIPTION	DOCUMENT AUTHOR	DOCUMENT DATE
P491A	RMRS-WIPP-98-100	RFETS Acceptable Knowledge TRU/TRM Waste Stream Summaries. RMRS -WIPP-98-100, Section 7.44, TRM Grit (D007), Profile No. RF117.01 (RMRS-WIPP-98-100)	Rocky Flats Environmental Technology Site	1/19/2005
P492A	CCP-AK-SRS-008	Central Characterization Project Acceptable Knowledge Summary Report For Mound Site Transuranic Waste Stored at Savannah River Site. Waste Streams: SR-MD-HET; SR-MD-SOIL; SR-MD-HOM-A, SR-MD-HOM-B. (CCP-AK-SRS-008)	David H. Haar	09/23/2005
P493A	MLM-ML-90-48-001	Characterization of Mound's Hazardous, Radioactive, and Mixed Wastes, MLM-ML-90-48-001. August 15, 1990 (MLM-ML-90-48-001)	From Centralized Characterization Project Acceptable Knowledge record for Mound waste	8/15/1990
P494A	RMRS-WIPP-98-100	RFETS Acceptable Knowledge TRU/TRM Waste Stream Summaries. RMRS -WIPP-98-100, Section 7.29, TRM Solidified Inorganic Waste (F001, F002, F005, F006, F007, F009, P030, P098, P16, U003, U103, U108). Profile No. RF107.07 (RMRS-WIPP-98-100)	Rocky Flats Environmental Technology Site	8/23/2004
P495A	Waste Form 60, Solidified Lab Waste	Rocky Flats Environmental Technology Site Backlog Waste Reassessment Baseline Book, Waste Form 60, Solidified Lab Waste. (Waste Form 60, Solidified Lab Waste)	Prepared by Rocky Mountain Remediation Services, L.L.C Copy of Controlled Copy provided by RFETS to BBWI.	5/16/2000
P496A	WO-4021-C	Miscellaneous Aqueous Waste Handling and Solidification (WO-4021-C)	Waste Operations	10/12/1988
P497A	N/A	1996 and 1998 Chemical Inventory and 1991 Carcinogen list	Centralized Characterization Project (CCP), AK Record P096 for SRS Mound waste.	5/25/2005
P498A	N/A	Tools for Decontamination and Decommissioning of Nuclear Facilities	R. E. Hermatz, From Centralized Characterization Project (CCP), AK Record P015 for SRS Mound waste	11/16/1986
P499A	N/A	Mounds Decommissioning Experience, Tooling and Techniques	A B Combs, W P Davis, T C Elswick, JB Garner and J Gaichmon	10/14/1982

Implementing Document: MP-TRUW-8.13

TRACKING NUMBER	DOCUMENT NUMBER	DOCUMENT TITLE/DESCRIPTION	DOCUMENT AUTHOR	DOCUMENT DATE
P500A	MLM-3517	The Mound Site Survey Project for the Characterization of Radioactive Materials in the Site Soils. (MLM-3517)	R. L. Stought, D. A. Edling, D. G. Draper,	5/16/1988
P501A		Reinvestigation of the January 1969 Pu-238 Waste Transfer Line Break.	Monsanto Research Corporation - Mound Laboratory	9/16/1974
P502A	INEL-95/0519	Addendum to MLM-ML-95-41-0001, Mound Building 38 FSAR: Pu-239 Repackaging, Phase 1, by INEL-95/0519, Rev. 3. (INEL-95/0519)	S. T. Khericha, S. Eide, L. N. Haney, T. K. Overlin, T. G. Ryan	6/1/1996
P503A		EG&G Mound Building 38 Accident Analysis of Internal (Operational) Events (Results and Findings)	J. L. Jones and T. G. Ryan	6/1/1994
P504A	MD-10537	Building 50 Radioisotopic Thermoelectric Generator Assembly and Testing Facility Final Safety Analysis Report (OUO). MD-10537, Issue 1, (MD-10537)	T. A. Frazier, R. E. Berry, and G. D. Miller.	7/25/2002
P505A	MD-10480	SW/R Complex Basis for Interim Operations. (MD-10480)	J. L. Allison and P. A. Craycraft.	9/30/2001
P506A	MLM-MU-75-63-0004	Estimated Discard Limits for Plutonium-238 recovery Processing in the PP Building, Document Number MLM-MU-75-63-0004, (MLM-MU-75-63-0004)	D. F. Luthy and W. H. Bond.	03/26/1975
P507A	MLM-MU-76-66-0001	Hazard Evaluation of the Special Metallurgical (SM) Building at Mound Laboratory (MLM-MU-76-66-0001)	T. M. Flanagan	08/06/1976
P508A	MLM-3848	Building WDA, Room 10 Glove Box Removal, Wall Removal, Characterization, and Cleanup Safety Assessment, MLM-3848, Issue 1, (MLM-3848)	C. White, R. Church, S. D. Rohrig	6/21/2001
P509A	N/A	Executive Summary of TRU Waste at Mound, Author not identified.	Author not identified. Mound Laboratory	09/15/1993
P510A	MD-70205	Technical Manual – TRU Waste Management dated 1/1/1976 to 12/19/1988 (MD-70205)		12/19/1988
P511A	MLM-ML-95-0001	Final Safety Analysis Report for Building 38, Document number MLM-ML-95-0001, Revision 11 (MLM-ML-95-0001)	F. Mintz, M. D. Gilliat	11/09/1995

Implementing Document: MP-TRUW-8.13

TRACKING NUMBER	DOCUMENT NUMBER	DOCUMENT TITLE/DESCRIPTION	DOCUMENT AUTHOR	DOCUMENT DATE
P512A	MD-10481	Waste Disposal Facility Auditable Safety Analysis, MD-10481, Revision 4, (MD-10481)	F. Schmaltz, D. Punch, C. White - From Centralized Characterization Project (CCP), AK Record P045 for Mound waste at SRS.	01/21/2003
P513A	WM-IWCP-00-007	Vent TRU Drums In CWPF, by W. Franz, Document Number WM-IWCP-00-007, Revision 1, no date of publication. (WM-IWCP-00-007)	W. Franz From Centralized Characterization Project (CCP), AK Record P048 for Mound waste at SRS.	
P514A	WSRC-PH-95-11	TRU Drum Venting Fact Sheet, TRU Drum Venting Procedure and TRU Drum Venting System Pre-Operational Process Hazards Review. WSRC-PH-95-11, Revision 2, (WSRC-PH-95-11)	From Centralized Characterization Project (CCP), AK Record P049 for Mound waste at SRS.	2/20/1996
P515A	NFT-SR-0001	TRU Waste Drum Venting and Purging System, Author is NFT Inc, Document Number NFT-SR-0001, Revision 14, (NFT-SR-0001)	From Centralized Characterization Project (CCP), AK Record P050 for Mound waste at SRS.	1/13/2000
P516A	MLM-2976	The Use of Urethane Foam in the Decontamination and Decommissioning of Nuclear Facilities, Document Number MLM-2976, by R. Hermetz; dated October 14, 1982. (MLM-2976)	Rudy E. Hermetz Mound Facility	10/14/1982
P517A	MLM-MU-77-66-0001	Ten Year Plan for Decontamination and Decommissioning for Mound, S. S. Freeman, MLM-MU-77-66-0001. (MLM-MU-77-66-0001)	Sam S. Freeman - Mound Laboratory	6/30/1977
P518A	MD-22153	Mound Site Radionuclides by Location. (MD-22153)	Wayne C King (Tech. Responsible)	6/22/1995
P519A	N/A	A Summary Review of Mound Laboratory's Experience in D&D of Radioactive Facilities, 1949-1973; by JM Garner and WP Davis.	J.M. Garner and W.P. Davis From Centralized Characterization Project (CCP), AK Record P055 for Mound waste at SRS.	1975

Implementing Document: MP-TRUW-8.13

TRACKING NUMBER	DOCUMENT NUMBER	DOCUMENT TITLE/DESCRIPTION	DOCUMENT AUTHOR	DOCUMENT DATE
P520A	DOE/EA-0683	Decontamination and Decommissioning Projects Findings of No Significant Impact, DOE/EA-0683, By DOE, (DOE/EA-0683)	US Department of Energy - From Centralized Characterization Project (CCP), AK Record P056 for Mound waste at SRS.	5/1/1995
P521A	MD-10167	Technical Manual, MD-10167, titled "D&D Operations Procedures". Revision 9. (MD-10167)	Mound Laboratory	4/18/1995
P522A		Mound Site Waste Management Reports and Site Plans 1977-1980. Authored by Monsanto Research Corp ()	Monsanto Research Corp. From Centralized Characterization Project (CCP), AK Record P058 for Mound waste at SRS.	10/01/1980
P523A	P523A	Mound Site Waste Management Reports and Site Plans 1972 to 1976 (P523A)	From Centralized Characterization Project (CCP), AK Record P063 for Mound waste at SRS.	06/01/1976
P524A	N/A	Mound Site Waste Management Reports and Site Plans 1981 to 1989, Monsanto Research Corp.	Monsanto Research Corp From Centralized Characterization Project (CCP), AK Record P064 for Mound waste at SRS	12/20/1989
P525A	MD-10203	Technical Manual, MD-10203, Issue 1, June 1, 1985; Mound WIPP Certification Program for Newly Generated Contact Handled Transuranic Waste. Also includes Issue 2 dated June 10, 1986; Issue 5 dated September 1, 1988; Issue 6 dated April 14, 1989. (MD-10203)	Mound Laboratory From Centralized Characterization Project (CCP), AK Record P065 for Mound waste at SRS.	4/14/1989
P526A	SE/USQ-1995-0004	Revised U-233 Repack Project, R. L. Higgins, SE/USQ-1995-0004, Revision 2, (SE/USQ-1995-0004)	R.L. Higgins	1/17/1995

Implementing Document: MP-TRUW-8.13

TRACKING NUMBER	DOCUMENT NUMBER	DOCUMENT TITLE/DESCRIPTION	DOCUMENT AUTHOR	DOCUMENT DATE
P527A		Final Safety Analysis Report for the SW/R Tritium Complex, T. L. Buxton,	T.L. Buxton - From Centralized Characterization Project Acceptable Knowledge record for Mound waste	2/4/1992
P528A	MD-10246	Technical Manual, MD-10246, Issue 4, On-Site Transportation and Handling of Radioactive and Hazardous Materials. W. R. Henderson, (MD-10246)	W.R. Henderson	12/4/2000
P529A	MD-10173	USERS Handbook: Waste Accountability Shipping and Packaging Handbook, Issue 13, August 4, 1998, W. E. Stalder. (MD-10173)	W.E. Stalder	8/4/1998
P530A	MD-81070	Technical Manual, MD-81070, Issue 1: Mound Plant Waste Acceptance Criteria, R. S. Tunning, 10-13-92. (MD-81070)	R.S. Tunning	10/13/1992
P531A	MD-70523	Management of hazardous waste, radioactive mixed waste, trash and recyclable metals. P E. Figgins, MD-70523, (MD-70523)	P.E. Figgins Mound Laboratory	3/28/1995
P532A	n/a	Fiscal Year 1997 Update to the Approved Site Treatment Plan – Background Volume for the Mixed Wastes at Mound Facility, Revision 10, December 18, 1997 (n/a)	Mound Laboratory, From Centralized Characterization Project (CCP), AK Record P081 for SRS Mound waste	12/18/1997
P533A	MLM-2249	Mound Laboratory Environmental Plutonium Study – 1974, MLM-2249. (MLM-2249)	D. R. Rogers From Centralized Characterization Project (CCP), AK Record P086 for Mound waste at SRS.	9/15/1975
P534A	N/A	List and directory of chemical Material Safety Data Sheets, 1996	Mound Laboratory	MULITPLE D
P535A	N/A	WD Soil Removal Project, H. A. Black,	H.A. Black	11/1/1974
P536A	N/A	Mound Quality Control Plan for the Control Of Radioactive Waste, Monsanto Research Corporation	Monsanto Research Corporation, Mound	10/1/1982
P537A	N/A	N/A	N/A	N/A

Implementing Document: MP-TRUW-8.13

TRACKING NUMBER	DOCUMENT NUMBER	DOCUMENT TITLE/DESCRIPTION	DOCUMENT AUTHOR	DOCUMENT DATE
P538A	DOE-E-5948	DOE-E-5948, Railcar Exemption, June 26, 2000 and December 13, 2001 (DOE-E-5948)	US Dept of Transportation - From Centralized Characterization Project (CCP), AK Record P109 for Mound waste at SRS.	MULTIPLE D
P539A	N/A	Site Treatment Plan for the Mixed Wastes at the Mound Facility	US Department of Energy	9/15/1995
P540A	N/A	Mound Site – United States Nuclear Forces Web Site, www.globalsecurity.org/wmd/facility/mound.htm August 22, 2002	John Pike	8/22/2002
P541A	ES-50421A	Drum Specification, 30 Gallon Drum, DOT-17H, WMP-572005 (ES-50421A)	Prepared by: B.B. Kaiser; orginiated by: E.W. Kendell	7/22/1981
P542A	ES-50393 A	Drum Specification, DOT 7A Steel Box for Idaho (ES-50393 A)	R. H. Schletter ; Prepared by B.B. Kaiser, Originated by E.W. Kendall	7/22/1981
P543A	N/A	Waste Characterization Services Report, Canberra Industries, Rev. 1, 2/1998.	Canberra Industries Special Services Group	2/1/1998
P544A	ERA-NRE-94-?	Criticality Safety Evaluation for Mound RTG Storage – DRAFT. (ERA-NRE-94-?)	J. L. Judd	3/1/1994
P545A	N/A	Predecisional DRAFT, SW/R Tritium Complex.	David R. Billings and Thomas M. Flanagan	11/4/1993
P546A	DOE/EH-0415,Volume 2, Appendix B, Part 7	DOE/EH-0415,Volume 2, Appendix B, Part 7: Mount Site Assessment Team Report on ES&H Vulnerabilities Associated with the Department's Plutonium Storage, authored by US-DOE. (DOE/EH-0415,Volume 2, Appendix B, Part 7)	US Department of Energy	9/1/1994
P547A	Report No. 74-13	Investigation Report No. 74-13, Plutonium Off-Site, Monsanto Research Corporation, not dated. (Report No. 74-13)	Monsanto Research Corporation.	NOT DATED
P548A	MLM-ML-76-49-0002	Mound Laboratory Fact Book, MLM-ML-76-49-0002 (MLM-ML-76-49-0002)	Monsanto Research Corporation	9/23/1976

Implementing Document: MP-TRUW-8.13

TRACKING NUMBER	DOCUMENT NUMBER	DOCUMENT TITLE/DESCRIPTION	DOCUMENT AUTHOR	DOCUMENT DATE
P549A		Radioisotopic Fuel Data, date and author unknown.	Author Unknown; From Centralized Characterization Project (CCP), AK Record I044 for Mound waste at SRS.	
P550A		DRAFT – On-Site Handling, Repackaging, and Transportation of Nuclear Materials Located in SW-19 and R-127: Preliminary Hazards and Accident Analysis.	T. Solack, D. Ullman, and C. Cox	9/1/1996
P551A	N/A	UGL Action Memo, Removal Action of Soil and Underground Waste Transfer Lines Leading to WD Building, CH2MHill.	Department of Energy Miamisburg Closure Project	9/1/2003
P552A	N/A	1996 and 1998 Chemical Inventory and 1991 Carcinogen list.	Mound Laboratory	1998
P553A	N/A	"Milliwatt Surveillance Program Ensures RTG Safety and Reliability," The Actinide Research Quarterly, Los Alamos National Laboratory, Winter 1994.	From Centralized Characterization Project (CCP), AK Record I003 for SRS Mound waste. Trent Latimer is Project Leader of the Milliwatt Surveillance Program.	1994
P554A	MLM-MU-76-63-0001	1975 Mound Laboratory Annual Report, "Pu-238 Heat Sources," Mound Laboratory, MLM-MU-76-63-0001, 1975. (MLM-MU-76-63-0001)	Mound Laboratory - From Centralized Characterization Project (CCP), AK Record I030 for Mound waste at SRS.	1975
P555A	N/A	Excerpts from the 1976 and 1977 Mound Laboratory Annual Reports, "Mound 76" and "Mound 77, Mound Facility Annual Report 30 Years of Growth," Mound Laboratory, 1976 and 1977.	From Centralized Characterization Project (CCP), AK Record I032 for Mound waste at SRS.	1975, 1976
P556A	MD-70205	Excerpts from MD-70205, "Material Type Codes," Mound Laboratory, Issue 3, not dated. (MD-70205)	Mound Laboratory - From Centralized Characterization Project (CCP), AK Record I081 for Mound waste at SRS.	NOT DATED

Implementing Document: MP-TRUW-8.13

TRACKING NUMBER	DOCUMENT NUMBER	DOCUMENT TITLE/DESCRIPTION	DOCUMENT AUTHOR	DOCUMENT DATE
P557A	ES-50365 B	Specification Drum 55 GAL DOT-17C, Thomas Edward Curry, ES-50365 B, EG&G Idaho, Inc., (ES-50365 B)	Thomas Edward Curry, Source: From Centralized Characterization Project (CCP), AK Record M036 for Mound waste at SRS.	7/22/1978
P558A	MLM-MU-75-70-0001	Mound Laboratory Annual Report CY 1974, R.K. Flitcraft, MLM-MU-75-70-0001, October 1975. (MLM-MU-75-70-0001)	From Centralized Characterization Project (CCP), AK Record P070 for Mound waste at SRS.	10/1/1975
P559A	P559A	"An Early History of U.S. Radioisotope Thermoelectric Generators," Nuclear News, (P559A)	Derived from excerpts adapted and edited - from a Dept. of Energy publication, "Atomic Power in Space: A History" prepared by Richard E. Engler	5/1/2003
P560S	DOE/OPA-0038	Nuclear Power in Space (DOE/OPA-0038)	U.S. DOE Office of Public Affairs	8/1/1978
P561A	WAPD-TM-588	Fabrication of Fuel Rods Containing U-233 Pelletized Oxide Fuels; W.L. Frankhouser, et. al.; Bettis Atomic Power Laboratory; (WAPD-TM-588)	W.L. Frankhouser, H.H. Crain, R.L. Fischer, J.H. Suldan, J.H. Eyler, E.L. Speer Documentation collected for Bettis AK record.	2/1/1967
P562A	WAPD-TM-1244 (L)	ThO2 and ThO2-233UO2 High Density Fuel Pellet Manufacture for the Light Water Breeder Reactor (LWBR Development Program (WAPD-TM-1244 (L))	J. Belle, et. al.	1/1/1976
P563A	WAPD-FE-1105	The Fabrication of Zircaloy-2 Clad U-Mo and U-Nb Rods For Irradiation In the Materials Testing Reactor; Bettis Atomic Power Laboratory, Westinghouse Electric Corporation; W. B. Haynes; (WAPD-FE-1105)	W. B. Haynes	10/31/1955
P564A	WAPD-RC/E(EE)-2838	Effluent and Environmental Monitoring Report for the Calendar Year 1992; Westinghouse Electric Corporation Bettis Atomic Power Laboratory; WAPD-RC/E(EE)-2838, not dated. (WAPD-RC/E(EE)-2838)	Westinghouse Electric Company - Documentation collected for Bettis AK record.	NOT DATED

Implementing Document: MP-TRUW-8.13

TRACKING NUMBER	DOCUMENT NUMBER	DOCUMENT TITLE/DESCRIPTION	DOCUMENT AUTHOR	DOCUMENT DATE
P565A	WAPD-T-3007	The Shippingport Pressurized Water Reactor and Light Waster Breeder Reactor; J.C. Clayton; Westinghouse Electric Corporation Bettis Atomic Power Laboratory, For Presentation at the 25th Central Regional Meeting, American Chemical Society, Pittsburgh, Pennsylvania; (WAPD-T-3007)	J.C. Clayton	OCTOBER 4-
P566A	EDF-RWMC-344	Identification of Bettis 6M Containers (EDF-RWMC-344)	R. L. Devries	9/30/1988
P567A	EDF-2550	INEEL Stored Contact-Handled Transuranic Waste Volumes; Idaho National Engineering and Environmental Laboratory; EDF-2550, Rev 0; September 30, 2002 (EDF-2550)	C.J. Barnard	09/30/2002
P568A	EDF-5159	TRU Waste Determination for Waste Containing U-233 Stored at the RWMC; Idaho National Engineering and Environmental Laboratory (EDF-5159)	Pui Kuan; Documentation collected for Bettis AK record.	9/15/2004
P569A	B-RC/E(EE)EMR-0500	Bettis - Pittsburgh Site Environmental Summary Report; Bechtel Bettis, Inc., Bettis Atomic Power Laboratory; (B-RC/E(EE)EMR-0500)	Bechtel Bettis Bettis Atomic Power Laboratory	8/1/1999
P570A	N/A	Region 3 GPRA Baseline RCRA Corrective Action Facility Bettis Atomic Power Laboratory; U.S. Environmental Protection Agency;	U.S. Environmental Protection Agency Region III, Contact Mr. Darius Ostrauskas	6/27/2005
P571A	N/A	The United States Navel Nuclear Propulsion Program Over 132 Million Miles Safely Steamed on Nuclear Power; Department of Energy and Department of Navy	US Department of Energy, US Department of the Navy, Documentation collected by CCP as part of Remote Handled program.	3/1/2005
P572A		Advanced Mixed Waste Treatment Project Bettis Atomic Power Laboratory Waste White Paper; R. A. Rickman; Waste Operations Technical Support;	R. A. Rickman Documentation collected for Bettis AK record.	6/9/2005
P573A	N/A	Excerpts from Bettis Employee Handbook; Bechtel Bettis, Inc.; W. C. Rogers	Bechtel Bettis, Inc., Documentation collected by CCP as part of remote-handled program.	08/01/2004
P574A	N/A	Material Safety Data Sheets (MSDSs) Associated with the Materials Examination Facility, various authors and dates.	Multiple Manufacturers MSDSs - Documentation collected by CCP as part of remote-handled program.	MULITPLE D

Implementing Document: MP-TRUW-8.13

TRACKING NUMBER	DOCUMENT NUMBER	DOCUMENT TITLE/DESCRIPTION	DOCUMENT AUTHOR	DOCUMENT DATE
P575A	INEEL/EXT-98-00336	INEEL Initial Site Assessment Report The Storage of U-233, Lewis, L. C. and Wilkinson, D. R., Lockheed Martin Idaho Technologies Company, INEEL/EXT -98-00336 (INEEL/EXT-98-00336)	Leroy C. Lewis, Dennis R. Wilkinson	3/1/1998
P576A	WAPD-TM-576	Fabrication of High and Low Density ThO2 Fuel Pellets; by CR Hutchinson and RGR Johnson; WAPD-TM-576, December 1966. (WAPD-TM-576)	C.R. Hutchison, R.G.R. Johnson	12/1/1966
P577A	WAPD-TM-577	Fabrication of Fuel Pellets from Pot Process Denitrated ThO2 Powder, by RGR Johnson, WAPD-TM-577, July 1966. (WAPD-TM-577)	R.G.R. Johnson	7/1/1966
P578A	WAPD-TM-578	Fabrication of Solid, Annular, and Dished-End Ceramic Fuel Pellets, by RGR. Johnson and HH Crain; WAPD-TM-578, May 1967 (WAPD-TM-578)	R.G.R. Johnson H.H. Crain	5/1/1967
P579A	WAPD-TM-581	Fabrication of Fuel Pellets from Sol-Gel Powders, by HH Crain and CR Hutchison, WAPD-TM-581, November 1966. (WAPD-TM-581)	H.H. Crain, C.R. Hutchison	11/1/1966
P580A	WAPD-TM-582	Removal of Iron and Boron During Fabrication of Ceramic Fuel Pellets; by H. H. Crain, Jr.; WAPD-TM-582, (WAPD-TM-582)	H.H. Crain, Jr.	6/1/1966
P581A	WAPD-TM-589	Fractional Factorial Experiment In Fabricating Thoria Fuel Pellets, W. L. Frankhouser; WAPD-TM-589, (WAPD-TM-589)	W. L. Frankhouser	2/1/1967
P582A	WAPD-TM-607	Single-Sinter Process for Manufacturing UO2-ZrO2 and UO2-ThO2 Fuel Pellets – A Feasibility Study, RT Davis and CR Hutchison, WAPD-TM-607, (WAPD-TM-607)	RT Davis and CR Hutchison	12/1/1966
P583A	WAPD-TM-721	Fabrication of Low Density Urania-Thoria Fuel Pellets (LWBR Development Program), GH Williams, MK Rodriguez, and RGR Johnson; WAPD-TM-721, (WAPD-TM-721)	G.H. Williams, M.K. Rodriguez, R.G.R. Johnson	6/1/1968
P584A	WAPD-TM-751	The Hot-Pressing Behavior of Sintered Low-Density Pellets of UO2, ZrUO2, ThO2, and ThO2-UO2 (LWBR Development Program), SF Kaufman; WAPD-TM-751, May 1969 (WAPD-TM-751)	S. F. Kaufman	5/1/1969
P585A	WAPD-TM-789	Planetary Ball Milling as a Method of Comminuting Presintered Thoria-Urania Granules (LWBR Development Program) (WAPD-TM-789)	T.J. Burke	4/1/1969
P586A	WAPD-TM-880	Effect of Carbowax Binder and Dextrose Additive on the Microstructure, Density, and Open Porosity of Thoria-Urania Fuel Pellets (LWBR Development Program); TJ Burke; WAPD-TM-880, (WAPD-TM-880)	T.J. Burke	11/1/1969

Implementing Document: MP-TRUW-8.13

TRACKING NUMBER	DOCUMENT NUMBER	DOCUMENT TITLE/DESCRIPTION	DOCUMENT AUTHOR	DOCUMENT DATE
P587A	WAPD-TM-909	Corrosion of Oxide Nuclear Fuels in High Temperature Water (LWBR Development Program), JM Markowitz and JC Clayton; WAPD-TM-909, (WAPD-TM-909)	JM Markowitz and JC Clayton	2/1/1970
P588A	WAPD-TM-908	The Thermal Conductivity of Polycrystalline Thoria and Thoria-Urania Solid Solutions (LWBR Development Program); RM Berman, TS Tully, J Belle, and I Goldberg; WAPD-TM-908, (WAPD-TM-908)	R.M. Berman, T.S. Tully, J. Belle, I. Goldberg	12/1/1972
P589A	WAPD-TM-1051	The Homogenization of ThO2-UO2 (LWBR Development Program), RM Berman; (WAPD-TM-1051)	R.M. Berman	12/1/1972
P590A	WAPD-TM-1600	Water Cooled Breeder Program Summary Report (LWBR Development Program), R. Atherton; (WAPD-TM-1600)	R. Atherton,Coordinator	10/1/1987
P591A	N/A	Material Safety Data Sheets (MSDS) for Micro® Detergents, International Products Corporation, March 30, 1990 and April 1, 1993.	Internet, International Products Corporation	4/1/1993
P592A	N/A	Material Safety Data Sheets (MSDS) for Paint Removers	W. M. Barr & Company	11/14/1993
P593A	RMRS-WIPP-98-100, Section 7.29	RFETS Acceptable Knowledge TRU/TRM Waste Stream Summaries. RMRS -WIPP-98-100, Section 7.29, TRM Solidified Inorganic Waste, Profile No. RF107.07, Rev. 1, (RMRS-WIPP-98-100, Section 7.29)	Rocky Flats Environmental Technology Site.	8/23/2004
P594A	RMRS-WIPP-98-100, Section 6.17	RFETS Acceptable Knowledge TRU/TRM Waste Stream Summaries, TRU Firebrick Debris Waste (RMRS-WIPP-98-100, Section 6.17)	Rocky Flats Environmental Technology Site.	11/4/2004
P595A	M4T00-DCD-03-062, RFETS01	Hanford Site Transuranic Waste Management Waste Specific Acceptable Knowledge Documentation for TRM Incinerator Ash from Rocky Flats Environmental Technology Site, Waste Stream RFETS01, M4T00-DCD-03-062, RFETS01, Revision 2. No date given. (M4T00-DCD-03-062, RFETS01)	Site AK files	N/A
P596A	EDF-4139	EDF-4139, Rev. 0; Hanford Ash Contribution to the RAL Radionuclide Inventory, September 10, 2003. (EDF-4139)		9/10/2003
P597A	M4T00-TRU-03-550, M4T00-TRU-03-488.1	WIPP Waste Stream Profile, RLMHASH.001, R. P. Dunn, TRU Program Director. (M4T00-TRU-03-550, M4T00-TRU-03-488.1)	R. P. Dunn, TRU Program Director.R. P. Dunn, TRU Program Director.	3/30/2004
P598A	RLRFETS.001	WIPP Waste Stream Profile Form (RLRFETS.001)		7/12/2004

Implementing Document: MP-TRUW-8.13

TRACKING NUMBER	DOCUMENT NUMBER	DOCUMENT TITLE/DESCRIPTION	DOCUMENT AUTHOR	DOCUMENT DATE
P599A	N/A	Rocky Flats Environmental Technology Site Backlog Waste Reassessment Baseline Book, Waste Form 46, Particulate Sludge	Rocky Mountain Remediation Services, L.L.C.	7/12/2004
P600A	N/A	Integrated Waste Tracking System Container Profile, INTC040571, INTC040572, INTC040573. MTRU Laboratory Analytical Waste-WIR by Citation. July 14, 2004		7/14/2004
P601A	2461	Waste Material Characterization Profile; MTRU Laboratory Analytical Waste-WIR by Citation (2461)	Sylvia Sing, IWTS	06/09/2009
P602A	ICP/EXT-05-00833	Supplement to Evaluation of Naval Reactors Facility Radioactive Waste Disposed of at the Radioactive Waste Management Complex from 1953 to 1999 (Draft) (ICP/EXT-05-00833)	John Giles, Jean Holdren and Arpad Lengyel	04/01/2005
P603A	N/A	Bettis Atomic Power Laboratory Hazardous Waste and Materials Preparedness, Preventionn, and Contingency Plan (PCCP)	N/A	8/1/2004
P604A	N/A	BN304 Mound Waste Stream Profile Package	AMWTP, CBFO	12/13/2005
P605A	INEEL/EXT-99-00400	Material Safety Data Sheet for Turco (INEEL/EXT-99-00400)	John F. Grainger	02/25/2005
P606A	N/A	Material Safety Data Sheet for Versene	N/A	12/4/1992
P607A	N/A	Information on Kepro Developer	N/A	N/A
P608A	RFP-1985 UC-4 CHEMISTRY TID-4500 - 56 Ed.	THE HEATS OF SOLUTION OF BERYLLIUM IN CHEMICAL MILLING SOLUTIONS (RFP-1985 UC-4 CHEMISTRY TID-4500 - 56 Ed.)	JAMES D. NAVRATIL FRANKLIN L. OETTING	1/24/1973
P609A	N/A	BN004 Special Setups Waste Stream Profile Package, December 28, 2005; Change Notice #1, February 15, 2007; Change Notice #2, April 2, 2008; and Change Notice #3, August 5, 2010.	AMWTP CBFO	12/28/2005
P610A	BN161 WSP	BN161 Firebrick Debris Waste Stream Profile Package (BN161 WSP)	AMWTP CBFO	12/20/2005
P611A	AMWTP-RPT-TRUW-03	Drum Assay Technical Review Report (AMWTP-RPT-TRUW-03)	AMWTP	CUR DATE
P612A	ACMM-9500	Sample Preparation for Semivolatile Organic Compounds and Polychlorinated Biphenyls, Idaho National Engineering and Environmental Laboratory (ACMM-9500)	INEEL	12/15/2004
P613A	ACMM-2810	Determination of Mercury by CVAA for TRU Waste Characterization (ACMM-2810)	Idaho National Engineering and Environmental Laboratory	1/27/2005

Implementing Document: MP-TRUW-8.13

TRACKING NUMBER	DOCUMENT NUMBER	DOCUMENT TITLE/DESCRIPTION	DOCUMENT AUTHOR	DOCUMENT DATE
P614A	ACMM-2901	Determination of Metals by ICP-AES for TRU Waste Characterization (ACMM -2901)	Idaho National Engineering and Environmental Laboratory	1/27/2005
P615A	ACMM-8909	Microwave Assisted Digestion of Homogeneous Solids and Soil/Gravel (ACMM-8909)	Idaho National Engineering and Environmental Laboratory	1/17/2006
P616A	ACMM-9260	Volatile Organic Compounds by Gas Chromatography Mass Spectrometry (ACMM-9260)	Idaho National Engineering and Environmental Laboratory	12/1/2005
P617A	ACMM-9270	Semivolatile Organic Compounds by Gas Chromatography/Mass Spectrometry (ACMM-9270)	Idaho National Engineering and Environmental Laboratory	1/20/2005
P618A	ACMM-9441	Determination of Nonhalogenated Volatile Organics by Gas Chromatography (ACMM-9441)	Idaho National Engineering and Environmental Laboratory	12/22/2004
P619A	PLN-600	Analytical Laboratories Quality Assurance Plan for the TWCP (PLN-600)	Idaho National Engineering and Environmental Laboratory	4/18/2005
P620A	PLN-1258	Quality Program Plan for the TWCP, , PLN-1258, Revision 2, 4/3/05 (PLN-1258)	Idaho National Engineering and Environmental Laboratory	4/3/2005
P621A	LA-UR-05-3247*	A Technically Useful History of the Critical Mass Laboratory at Rocky Flats (LA-UR-05-3247*)	Robert E. Rothe	5/1/2005
P622A	N/A	Work Plan for Environmental Restoration of the DOE Mound Site, Mound 2000 Approach	Babcock and Wilcox of Ohio	2/1/1999
P623A	AMDM-000000002	Nevada Test Site Waste Profile Waste Stream (AMDM-000000002)	J.C. Miles, Babcock & Wilcox of Ohio	6/11/1998
P624A	AMDM-000000002	Nevada Test Site Waste Profile Waste Stream (AMDM-000000002)	J.C. Miles, Babcock & Wilcox of Ohio	6/11/1998
P625A	AMDM-000000002	Nevada Test Site Waste Profile Waste Stream AMDM-000000002 (AMDM-000000002)	James Fontaine	6/6/2002
P626A	WAPD-TM-1208	Design of the Shippingport Light Water Breeder Reactor (LWBR Development Program), (WAPD-TM-1208)	D.R. Conners S. Milani J.A. Fest R Atherton	1/1/1979
P627A	WAPD-TM-850	Gas Release from Thoria-Base Oxide Fuel Pellets (LWBR Development Program) (WAPD-TM-850)	R.J. Smid	4/1/1971

Implementing Document: MP-TRUW-8.13

TRACKING NUMBER	DOCUMENT NUMBER	DOCUMENT TITLE/DESCRIPTION	DOCUMENT AUTHOR	DOCUMENT DATE
P628A	BMI-X-10210	Fabrication, Characterization, and Thermal-Property Measurements of ThO2-UO2 Fuel Materials (LWBR Development Program) (BMI-X-10210)	J.R. Springer E.A. Eldridge M.U. Goodyear T.R. Wright J.F. Lagedrost	10/1/1967
P629A	ORNL-4755	Conversion of Uranium Nitrate to Ceramic-Grade Oxide for the Light Water Breeder Reactor: Process Development (ORNL-4755)	JM Leitnaker M.L. Smith C.M. Fitzpatrick	4/1/1972
P630A	NLCO-970	Summary Technical Report for the Period October 1, 1965 to December 31, 1965 (NLCO-970)	S. Marshall R Burgett	2/1/1966
P631A	ORNL-4731	Laboratory Development of a Pressurized Cation Exchange Process for Removing the Daughters of U-232 from U-233 (ORNL-4731)	R.H. Rainey	12/1/1972
P632A	CCP-AK-INL-002	Central Characterization Project Acceptable Knowledge Summary Report for the Idaho National Laboratory Rocky Flats Transuranic Graphite Debris Waste Stream: ID-RF-S5126 (CCP-AK-INL-002)	David H. Haar	10/20/2005
P633A	CCP-AK-INL-004	Central Characterization Project Acceptable Knowledge Summary Report for Rocky Flats Combustibles and Plastic Stored at the Idaho National Laboratory: Waste Stream ID-RF-S5300-A (CCP-AK-INL-004)	David H. Haar	10/06/2005
P634A	CCP-AK-INL-005	Central Characterization Project Acceptable Knowledge Summary Report For Rocky Flats Immobilized Organic Liquids Stored at the Idaho National Laboratory: Waste Streams ID-RF-S3114 and ID-RF-S3150-A (CCP-AK-INL-005)	Larry Porter	10/20/2009
P635A	CCP-AK-INL-006	Central Characterization Project Acceptable Knowledge Summary Report for Rocky Flats Raschig Rings Stored at the Idaho National Laboratory: Waste Stream ID-RF-S5100-A; (CCP-AK-INL-006)	David H. Haar	10/20/2005
P636A	N/A	Central Characterization Project Waste Stream Profile Form; Waste Stream profile Number ID-RF-S5126	Barbara Broomfield	11/15/2005
P637A	N/A	Central Characterization Project Waste Stream Profile Form; Waste Stream profile Number ID-RF-S5300-A	Barbara Broomfield	11/15/2005

Implementing Document: MP-TRUW-8.13

TRACKING NUMBER	DOCUMENT NUMBER	DOCUMENT TITLE/DESCRIPTION	DOCUMENT AUTHOR	DOCUMENT DATE
P638A	N/A	Central Characterization Project Waste Stream Profile Form; Waste Stream profile Number ID-RF-S5100-A	Barbara Broomfield	11/15/2005
P640A	WM-PD-88-008	Waste Characterization Study on Greater Than Class "C" Radioactive Waste from the Monsanto-Dayton Laboratory. (WM-PD-88-008)	Dennis A. Peterson, EG&G Idaho, Inc.	1/1/1989
P641A	HNF-25697	Risk-Based Disposal Approval for North Loadout sludge Pit (HNF-25697)	Keith A. Kline	5/19/2005
P642A	N/A	Help from the Department of Defense.	N/A	4/27/2006
P643A	N/A	Health Risks of Fabric Softeners	website:http://www/littleplace.com/fabric.html	4/28/2006
P644A	N/A	Material Safety Data Sheet (MSDS), Proctor & Gamble	Proctor & Gamble	12/4/2002
P645A	N/A	Material Safety Data Sheet(MSDS)for fabric softner	U. S. Chemical Corporation	12/20/1999
P646A	BN836	BN836 Cemented Sludge Waste Stream Profile Package, April 28, 2006 Change Notice #1, January 24, 2007 Change Notice #2, April 2, 2008 (BN836)	AMWTP	04/02/2008
P647A	CCP-AK-INL-001	Central Characterization Project Acceptable Knowledge Summary Report for Waste Retrieved from Designated Areas within the Subsurface Disposal Area at the Idaho National laboratory (CCP-AK-INL-001)		12/02/2011
P648A	N/A	A nuclear jump-start for space power	Ben Iannotta	8/1/2002
P649A	RPT-TRUW-56	Acceptable Knowledge Document for INL Stored Transuranic Waste-Rocky Flats Plant (RPT-TRUW-56)	Advanced Mixed Waste Treatment Project	CUR DATE
P650A	RPT-TRUW-60	Acceptable Knowledge Document for INL Stored Transuranic Waste-Bettis Atomic Power Laboratory (RPT-TRUW-60)	AMWTP	CUR DATE
P651A	EPA-AMWTP-03.06-8	Waste Characterization Inspection Report, EPA Proposed Baseline Inspection No. EPA-AMWTP-03.06-8 of the Advanced Mixed Waste Treatment Project Facility at the Idaho National Laboratory, Docket No. A-98-49, II-A4-66 (EPA-AMWTP-03.06-8)	Unknown	7/1/2006
P652S	TREE-1286	Initial Drum Retrieval Final Report (TREE-1286)	Kirk B. McKinley Joseph D. McKinney	08/00/1978
P653S	TREE-1079	Initial Drum Retrieval Interim Report (July 1974 to September 1976) (TREE-1079)	D. H. Card D. K. Wang	05/00/1977

Implementing Document: MP-TRUW-8.13

TRACKING NUMBER	DOCUMENT NUMBER	DOCUMENT TITLE/DESCRIPTION	DOCUMENT AUTHOR	DOCUMENT DATE
P654S	TREE-1321	Early Waste Retrieval Final Report (TREE-1321)	James R. Bishoff Robert J. Hudson	08/00/1979
P655S	TREE-1061	Containment of Transuranic Contamination at the Early Waste Retrieval Project (TREE-1061)	Joseph L. Harness Joseph D. McKinney	01/01/1977
P656A	EDF-0135	Estimate of Number of SWBs to Ship Damaged Product Drums (EDF-0135)	Tamara Shokes	10/23/2006
P657S	N/A	Material Safety Data Sheets for Petroset II and Petroset IIG	Fluid Tech, Inc.	VARIOUS
P658A	HNF-28620	Acceptable Knowledge Document for Consolidated Babcock and Wilcox Parks Township Site Plutonium Facility Debris Waste Stream, RLCBWD (HNF-28620)	M.M. Anderson	9/28/2006
P659A	RLMPURX.001	RLMPURX.001 Transuranic Mixed Heterogeneous Debris Hanford Waste Stream Profile Package (RLMPURX.001)	M.M. Anderson	2/6/2004
P660A	RLMPDT.001	RLMPDT.001 Mixed Plutonium Finishing Plant Debris Hanford Waste Stream Profile Package (RLMPDT.001)		various
P661A	ID-SDA-DEBRIS	Central Characterization Project Waste Stream Profile Form; WSPF# ID-SDA -DEBRIS; (ID-SDA-DEBRIS)	Barbara Broomfield	2/21/2007
P662A	HNF-28514	Acceptable Knowledge Document for Hanford Site Solid Waste Operations Complex Debris Waste Stream, RLSWOCD.001, October 5, 2006 (HNF-28514)		10/5/2006
P663A	N/A	Fluid Tech, Inc., HAZCO Division, Product descriptions of AQUASET®, AQUASET II®, AQUASET II-H, PETROSET®, PETROSET-H®, PETROSET II®	N/A	N/A
P664A	TREE-1047	Early Waste Retrieval Interim Report (TREE-1047)	D. H. Card, Manager, Retrieval Operations	02/01/1977
P665A	N/A	Central Characterization Project Waste Stream Profile Form; Waste Stream profile Number ID-RF-S3150-A	Barbara Broomfield	11/15/2006
P666A	ID-RF-S3114	ID-RF-S3114, Central Characterization Project Waste Stream Profile Form; Waste Stream Profile Number ID-RF-S3114; Barbara Broomfield; November 15th, 2006 (ID-RF-S3114)	Barbara Broomfield	11/01/2009
P667A	N/A	AMWTP RCRA Part B Permits and interim status documents.	N/A	N/A

Implementing Document: MP-TRUW-8.13

TRACKING NUMBER	DOCUMENT NUMBER	DOCUMENT TITLE/DESCRIPTION	DOCUMENT AUTHOR	DOCUMENT DATE
P668S	INEEL/EXT-01-01587	Evaluation of Chemical Compatibilities of the OU7-10 Glovebox Excavator Method Project (INEEL/EXT-01-01587)	John R. Dick and Brent N. Burton	6/1/2002
P669S	INEEL/EXT-03-00471	Nitrate Reaction Report for the OU7-10 Glovebox Excavator Method Project (INEEL/EXT-03-00471)	John R. Dick	6/1/2003
P670A	DOE/LLW-217	DOE Waste Treatability Group Guidance (DOE/LLW-217)	T. D. Kirkpatrick	01/01/1995
P671S	RS-090-065	Historical Material Balance Area (MBA) Designator Usage, and Isotope Inventory Review for: • Uranium 235 (235U) and 238 (238U) • Plutonium 238 (238Pu) • Neptunium 237 (237Np) • Californium 252 (252Cf) • Curium 244 (244Cm) • Thorium (Th) (RS-090-065)	R.S. Moment, F.E. Gibbs, C.J. Freiboth, IT Corporation, Los Alamos, NM	8/31/1999
P672A	CCP-PO-003	CCP Authorized Methods for Payload Control (CCP-CH-TRAMPAC) (CCP-PO-003)	Central Characterization Project.	11/16/2006
P673A	HNF-33244	Acceptable Knowledge Document for 300 Area Mixed Debris Waste Stream, RLM300D, HNF-3324 (HNF-33244)	Vivian Sendelwick, AK, Fluor Hanford, Inc	12/18/2007
P674S	W0660-0012-QP	Quality Assurance Plan, Analytical Laboratory Procedure (W0660-0012-QP)	D. D. Standfield	8/19/2003
P675A	PLN-8300	MFC CH-TRU Waste Certification Program Plan (PLN-8300)	Battelle Energy Alliance	10/27/2008
P677A	PADC-1995-01046	Excerpts from Rocky Flats Backlog Waste Reassessment Baseline Book (BWRBB) – Waste Form 2 and Waste Form 44. (cka) (PADC-1995-01046)	RFETS	5/16/2000
P678S	N/A	Advanced Fuel Cycle Initiative (AFCI) Program Plan	DOE Office of Nuclear Energy, Science and Technology	5/1/2005
P679A	ANL-NT-192	The Defense Programs Origin of Transuranic Waste at Argonne National Laboratory-West. (ANL-NT-192)	H. F. McFarlane	11/01/2001
P680A	CCP-AK-INL-008	Central Characterization Project Acceptable Knowledge Summary Report for Idaho National Laboratory Materials and Fuels Complex Contact-Handled TRU Debris, Waste Stream ID-MFC-S5400 (CCP-AK-INL-008)	Mike Ramirez, CCP	12/03/2012
P682S	LWP-8300	Transuranic Waste Handling (LWP-8300)	INL - Battelle Energy Alliance	DRAFT
P683S	W0630-0026-KP	Dissolution of Pu Metal (W0630-0026-KP)		5/22/2001
P684S	W0630-0041-KP	Determination of Isotopic Composition of Uranium and Plutonium Using Finnigan Mat 262 Thermal Ionization Mass Spectrometer (W0630-0041-KP)	M. Michlik and D. Standfield	5/7/2001

Implementing Document: MP-TRUW-8.13

TRACKING NUMBER	DOCUMENT NUMBER	DOCUMENT TITLE/DESCRIPTION	DOCUMENT AUTHOR	DOCUMENT DATE
P685S	W0630-0057-KP	Uranium and Plutonium Separation From Electrorefiner Salt for Mass Spectrometer Analysis (W0630-0057-KP)	J. Berg and D. Standfield	6/18/1996
P686S	W0630-0059-OP	Standard Test Methods for Determining Chemical Durability of Nuclear Waste Glasses and Ceramics - Product Consistency Test (W0630-0059-OP)	S. Johnson and D. Standfield	12/16/2003
P687S	W0630-0128-KP	Sample Preparation for Analysis of Boron and Gallium in Plutonium Oxide (W0630-0128-KP)		3/27/2003
P688S	W0630-0102-KP	Dissolution of SRM-B Eutectic Salt Reference Material (W0630-0102-KP)	J. Berg and D. Standfield	5/7/2001
P689A	W0650-0008-OP	Glovebox Bagout Bag Replacement and Waste/Material Bagout (W0650-0008-OP)	MFC	7/19/2005
P690S	W0650-0016-OP	Waste Form Testing Glovebox (W0650-0016-OP)	MFC	8/12/2005
P691S	W0650-0019-OP	Rusnok Milling Machine for Waste Form Testing Glovebox. (W0650-0019-OP)	MFC	9/1/2005
P692S	W0650-0025-OP	Special Projects Glovebox Operation (W0650-0025-OP)	MFC	7/11/2005
P693S	W0650-0058OP	Casting Laboratory Glovebox Thermolyne-21135 Model Furnace (W0650-0058OP)	MFC	10/1/2002
P694S	W0650-0059-OP	Casting Laboratory AAA Cladding Tube Loading/Welding (W0650-0059-OP)	R. Fielding and D. D. Standfield	4/23/1993
P695A	W0650-0062-KP	Dissolution of Plutonium Metal Samples for Silicon Analysis (W0650-0062-KP)	MFC	11/5/2002
P696S	W0650-0063KP	Dissolution of Plutonium Oxide Samples for Trace Metal Analysis (W0650-0063KP)	J. Berg and D.D. Peay	3/31/2004
P697S	W0650-0064-KP	Determination of Gallium in Plutonium Oxide by Inductively-Coupled-Plasma Mass Spectrometer (W0650-0064-KP)	MFC	3/26/2003
P698S	W0650-0065-KP	Determination of Boron in Plutonium Oxide by Inductively-Coupled-Plasma Atomic Emission Spectrometry (W0650-0065-KP)	D. Cummings and D. D. Standfield	3/26/2003
P699A	W0650-0070-OP	Fabrication and Characterization of Pu, Np, and Am-Bearing Metallic Alloy Specimens (W0650-0070-OP)	MFC	8/2/2005
P700S	W0660-0035-AP	General Laboratory Waste (W0660-0035-AP)	MFC	6/30/2005
P701S	W0660-0036-AP	Notebooks and Logkeeping (W0660-0036-AP)	J. Berg and D. D. Standfield	8/19/2003

Implementing Document: MP-TRUW-8.13

TRACKING NUMBER	DOCUMENT NUMBER	DOCUMENT TITLE/DESCRIPTION	DOCUMENT AUTHOR	DOCUMENT DATE
P702S	W0660-0072-AP	Safety and Hazards Analysis, Chemical Hygiene, and Waste Minimization Plan for Preparation of Accelerator Transmutation of Waste Test Specimens (W0660-0072-AP)	K. Weatherston, J. Stuart, and D. D. Standfield	10/2/2002
P703A	W0660-0078-AP	Accelerator Transmutation of Waste Project Thermal Analysis Studies on ATW-1 Samples in Analytical Laboratory (W0660-0078-AP)	J. R. Kennedy and D. D. Standfield	7/31/2002
P704S	BXQRN	MSDS Blue Windex (BXQRN)	S. C. Johnson Wax	05/17/1995
P705S	BPBPK	MSDS National Brands Inc. - - Fantastik All Purpose Cleaner (BPBPK)	National Brands Inc.	7/27/1992
P706S	CLJRB	MSDS Atomic Products Corp - - Radiacwash I (CLJRB)	Atomic Products Corp	2/22/1988
P707S	CJSPN	MSDS Atomic Products Corp - - Radiacwash II (CJSPN)	Atomic Products Corp	11/10/1999
P708A	IWTS 3527	IWTS Material Profile No. 3527, Analytical Lab TRU Waste, generated from ANL Bldg 752 Analytical Laboratory. Inactive (IWTS 3527)	IWTS	5/19/2008
P709A	3526	IWTS Material Profile No. 3526, Casting Lab TRU Waste, ANL Bldg. 752, Analytical Laboratory, 4-1-99 (3526)	Fedder, Jennifer	3/31/2010
P710A	3657P	IWTS Material Profile No. 3657P: Glovebox Debris from: Testing, Alpha, & Special Projects, Casting Labs, etc. (3657P)	R. Allen	10/27/08
P711A	IWTS 2815A	IWTS Material Profle No. 2815A, CH-MLLW Generated at HFEF-WCA (IWTS 2815A)	IWTS	5/12/1998
P712A	IWTS 3978P	IWTS Material and Waste Characterization Profile: HFEF CH-MTRU (GGE & Ash Stabilization Experiments clean-up). INACTIVE as of 4/2/07 (IWTS 3978P)	IWTS	9/9/2003
P713A	EDF-RWMC-746	Identification of ILTSF Waste Stored on Pad 2 (EDF-RWMC-746)	RWMC	8/10/1994
P714S		Non-AMWTP generator waste profile, AMWTP Form 1687 - ID-SDA-Sludge	Central Characterization Project	5/22/2008
P715A	5419N	IWTS Material Profile No. 5419N, LL TRU, >100 nCi/g generated from ANL-704: ANL Bldg 704, Fuel Manufacturing Facility. INACTIVATED 9/29/09 and Replaced by 5419N.R1 created for WGS transition to BEA (5419N)	IWTS	5/19/2008
P716A	5274N	IWTS Material Profile No. 5274N, Misc. Waste from Waste Form Testing, Alpha, & Special Projects Glovebox, etc., 3-9-07 INACTIVE (5274N)	R. Allen	3/31/2010

Implementing Document: MP-TRUW-8.13

TRACKING NUMBER	DOCUMENT NUMBER	DOCUMENT TITLE/DESCRIPTION	DOCUMENT AUTHOR	DOCUMENT DATE
P717A		Rocky Flats Environmental Technology Site (RFETS) Backlog Waste Reassessment Baselne Book (BWRBB) ()	Rocky Mountain Remediation Services, L.L.C.	3/31/95 TH
P718A	5185N	IWTS Material Profile No. 5185N, Casting Lab Pb Lined Gloves, Generated From Bldg. 752, Analytical Laboratory, 1/10/2007 (5185N)	Jonathan Jacobson	3/31/2010
P719S	W0650-0049-EP	Accelerator Transmutation of Waste Project Arc-Melting Activities (W0650-0049-EP)	R. J. Kennedy and D. D. Standfield	06/08/2001
P720S	W0650-0051-OP	Arc Melting Furnace (W0650-0051-OP)	J. Stuart and D. D. Standfield	5/2/2002
P721S	W0650-0054-OP	Fabrication and Characterization of Futurix Pu, Np and Am-Bearing Metallic Alloy Fuel Slugs (W0650-0054-OP)	D. Porter and D. D. Peay	8/9/2005
P722A	W0650-0043-OP	Operating Procedure for Decontaminating Glovebox (W0650-0043-OP)	P. Hansen and D. D. Standfield	6/24/2003
P723S	W0650-0030-OP	Glovebox Glove, Bagout Sleeve and Gloveport Blank Replacement (W0650-0030-OP)	J. Stuart and D. Peay	5/5/2005
P724A	W0660-0076-AP	Accelerator Transmutation of Waste Project Diffusion Couple FCCI Studies on ATW. (W0660-0076-AP)	J. R. Kennedy and D. D. Standfield	7/18/2002
P725A	W0650-0032-OP	Glovebox Operation (W0650-0032-OP)	J. Stuart and D. Peay	5/5/2005
P726S	N/A	Material Safety Data Sheets; Petroset II and Aquaset II-H	Fluid Tech, Inc.	1/1/2005
P727A	WHM-96-01	ANL-W Waste Handling Manual Update; Chapter 7.8 "Hazardous Waste Accumulation Areas" (WHM-96-01)	ANL-W	12/10/1996
P728A	IWTS 2815	IWTS Material and Waste Chaaracterization Profile: MLLW Generated at HFEF-WCA. INACTIVE as of 10/18/00 (IWTS 2815)	IWTS	12/1/1997
P729A	IWTS 3583T	Material and Waste Characterization Profile. WETP Process Waste IDC-164 INACTIVE as of 4/2/2007 (IWTS 3583T)	IWTS	7/24/2002
P730A	RFETS WSPF RF118.01	TRM Incinerator Ash (RFETS WSPF RF118.01)	RFETS, Kaiser-Hill	10/19/2001
P731A	RF119.01	WIPP Waste Stream Profile Form RF119.01 and RFETS Acceptable Knowledge TRU/TRM Waste Stream Summaries RMRS-WIPP-98-100, Section 7.37, TRM Incinerator Sludge (RF119.01)	RFETS	01/25/2005

Implementing Document: MP-TRUW-8.13

TRACKING NUMBER	DOCUMENT NUMBER	DOCUMENT TITLE/DESCRIPTION	DOCUMENT AUTHOR	DOCUMENT DATE
P733S	CO-04-06-23-01	Rocky Flats Environmental Technology Site (RFETS) RCRA permit. July 23, 2004 Electronic version of this revision of the RCRA permit was obtained from the State of Colorado personnel. (CO-04-06-23-01)	State of Colorado	7/23/2004
P734A	ANL503T	IWTS Material and Waste Characterization Profile No. ANL503T, HEPA Filters Contaminated with Characteristic Waste and TRU, Bldg 752 (ANL503T)	Nancy Stewart, MFC	2/18/1998
P735S	AL-5000-LI-003	Contact-Handled Transuranic Waste Handling (AL-5000-LI-003)	MFC Laboratory Instruction	8/19/2008
P736A	NWE-ID-2000-002	Characterization of Existing Contact-Handled Waste Containers of Unknowns at RWMC (NWE-ID-2000-002)	C. A. Major, North Wind Environmental	9/1/2001
P740S	EDF-RWMC-625	TSA-1 and TSA-2 Waste Stack Corrosion Rate Validation Plan. (EDF-RWMC -625)	Kevin J. Liekhus	3/18/1993
P741A	GDE-318	SDA Targeted and Non-Targeted Waste Identification Operator Guide. (GDE-318)	Idaho Cleanup Project (ICP), CH2M-WG Idaho, LLC	10/09/2008
P742S	DOE/ID-10202	Investigative Report of the Breached Transuranic Waste Box and Subsequent Spread of Contamination Discovered April 21, 1988, at the Radioactive Waste Management Complex. (DOE/ID-10202)	C. R. Enos, W. G. Hathaway, J. S. Klossner, T. D. Merkling	6/1/1988
P743A	CAO-94-1005	Waste Isolation Pilot Plant Transuranic Waste Baseline Inventory Report (CAO-94-1005)	WIPP Technical Assistance Contractor for U.S. Department of Energy	02/01/1995
P744A	DOE/CAO-95-1121	Transuranic Waste Baseline Inventory Report (DOE/CAO-95-1121)	DOE/Carlsbad Area Office	12/00/1995
P745A	DOE/CAO-95-1121	Transuranic Waste Baseline Inventory Report (DOE/CAO-95-1121)	DOE/CAO	06/01/1996
P746A	DOE/TRU-2006-3344	Transuranic Waste Baseline Inventory Report - 2004 (DOE/TRU-2006-3344)	U.S. Department of Energy, Carlsbad Field Office	NONE
P748A	CCP-PK-NTS-001	Central Characterization Project Process Knowledge Summary Report For Nevada Test Site Lawrence Livermore National Laboratory Waste, Waste Streams: NTLLNL-S5400 and NTLLNL-S3900 (CCP-PK-NTS-001)	D.K. Ploetz	11/21/2008

Implementing Document: MP-TRUW-8.13

TRACKING NUMBER	DOCUMENT NUMBER	DOCUMENT TITLE/DESCRIPTION	DOCUMENT AUTHOR	DOCUMENT DATE
P749A	CCP-PK-NTS-003	Central Characterization Project Process Knowledge Summary Report For Nevada Test Site Lawrence Berkeley National Laboratory Waste, Waste Streams: NTLBL-S5400 and NTLBL-S3900 (CCP-PK-NTS-003)	D. K. Ploetz	11/06/2008
P750A	ANL142T	IWTS Material Profile No. ANL142T, Lead Contaminated Articles and Debris - TRU Contaminated, 2-13-98, Inactive as of 4-9-98 (ANL142T)	Nancy Stewart	3/31/2010
P751A	ANL505T.R1	IWTS #ANL505T.R1: Debris Contaminated with Characteristic Waste and MTRU, 3/11/2010 (ANL505T.R1)	Jonathan Jacobson, WGS	4/5/2010
P752A	HAER # CO-83-L	Historic American Engineering Record Rocky Flats Plant, Non-Nuclear Production Facility (Rocky Flats Plant, Building 444) (Rocky Flats Plant, Plant A) (Rocky Flats Plant, Building 44) (HAER # CO-83-L)	D. Jayne Aaron, Judith Berryman, Ph.D.	N/A
P753A	TREE-1265	Early Waste Retrieval Interim Report (TREE-1265)	Kirk B. McKinley and Joseph D. McKinney	05/01/1978
P754A	WMP 77-3	History of Buried Transuranic Waste at INEL (WMP 77-3)	D. H. Card, Manager, Retrieval Projects	03/01/1977
P755A	INEEL/EXT-02-01125	Ancillary Basis for Risk Analysis of the Subsurface Disposal Area (INEEL/EXT-02-01125)	K. Jean Holdren, Bruce H. Becker, Nancy L. Hampton, L. Don Koeppen, Swen O. Magnuson, T. J. Meyer, Gail L. Olson, A. Jeffrey Sondrup	09/27/2002
P757A	N/A	Nuclear Waste Policy Act of 1982	U.S. Congress	1982
P758A	ACI-120	Solid Radioactive Waste Retrieval Test (ACI-120)	R. J. Thompson	05/01/1972
P759S	ICP/EXT-04-00717	Summary of Rocky Flats Plant Waste Buried in the Subsurface Disposal Area (ICP/EXT-04-00717)	Edward Vejvoda	04/01/2005
P761S	IDO-12040	Radioactive Waste Disposal Data for the National Reactor Testing Station. (IDO-12040)	Osloond, Joe H.	4/7/1965
P763S	RWMC-EDF-321	Volume of Transuranic (TRU) Waste and TRU contaminated Soil Subject to BWP Retrieval Operations. (RWMC-EDF-321)	Plessinger, M. P.	4/11/1988

Implementing Document: MP-TRUW-8.13

TRACKING NUMBER	DOCUMENT NUMBER	DOCUMENT TITLE/DESCRIPTION	DOCUMENT AUTHOR	DOCUMENT DATE
P766A	CCP-AK-LANL-004	Central Characterization Project for Los Alamos National Laboratory, TA-50 Radioactive Liquid Waste Treatment, and LA-CIN02.001 and LA-MHD09.001 (CCP-AK-LANL-004)	Larry Porter, Central Characterization Project	08/26/2009
P767S	IDO-12040 Supplement No. 1	Radioactive Waste Disposal Data for the National Reactor Testing Station Idaho (IDO-12040 Supplement No. 1)	Osloond, Joe H. and Bruce L. Schmalz	8/1/1966
P768A	WM-F1-81-003	A History of the Radioactive Waste Management Complex at the Idaho National Engineering Laboratory (WM-F1-81-003)	Laura S. Pendlebury	08/30/1985
P769A	LA-CIN02.001	AMWTP Form-1687, Non-AMWTP Generator Waste Profile for Los Alamos National Laboratory TA-50 Radioactive Liquid Waste Treatment Facility Homogeneous Inorganic Solid (LA-002) (LA-CIN02.001)	Candice Weston, Site Project Manager, LANL	08/06/2007
P770A	LA-MIN03-NC.001	AMWTP Form-1687, Non-AMWTP Generator Waste Profile for Los Alamos National Laboratory TA-50 Radioactive Liquid Waste Treatment Facility Homogeneous Inorganic Solids (LA-003) (LA-MIN03-NC.001)	Sue Peterman, Site Project Manager, LANL	01/04/2007
P771A	CCP-AK-ORNL-001	Central Characterization Project for Nuclear Fuel Services Contact-Handled Transuranic Waste Stored at Oak Ridge National Laboratory, Waste Streams: OR-NFS-CH-HET and OR-NFS-CH-SOIL (CCP-AK-ORNL-001)	D. K. Ploetz, Central Characterization Project	8/11/2008
P772A	OR-NFS-CH-Soil Lot 1	AMWTP Form-1900, DOE CH-TRU Waste Profile for Nuclear Fuel Services Contact-Handled Transuranic Waste Soil Stored at Oak Ridge National Laboratory (OR-250) (OR-NFS-CH-Soil Lot 1)	Candice Weston, Site Project Manager for Central Characterization Project	12/07/2008
P773A	TB-T-07-004	WMP Training Bulletin, Acceptable Knowledge Documentation Management, Plutonium Finishing Plant (PFP) Absorbed Plutonium Nitrate Solutions Waste Stream RLPUNIT (TB-T-07-004)	J. A. Stewart, Hanford Acceptable Knowledge R. P. Dunn, Site Project Manager	4/9/2008
P774A	RLPUNIT	AMWTP Form-1687, Non-AMWTP Generator Waste Profile for Hanford PFP Absorbed Plutonium Nitrate Solutions RLPUNIT (RL-715) (RLPUNIT)	R. P Dunn, Hanford SPM	06/10/2008
P775A	TB-T-05-005	WMP Training Bulletin, Acceptable Knowledge Documentation Management, KE Basin Sludge Waste Stream (TB-T-05-005)	Dan Arrenholz, Hanford Acceptable Knowledge R. P. Dunn, Site Project Manager	1/19/2006
P776A	KEBASIN01	AMWTP Form-1687, Non-AMWTP Generator Waste Profile for Hanford Grouted KE Basin North Loadout Pit Sludge (RL-720) (KEBASIN01)	Rick P Dunn, Hanford SPM	08/16/2007

Implementing Document: MP-TRUW-8.13

TRACKING NUMBER	DOCUMENT NUMBER	DOCUMENT TITLE/DESCRIPTION	DOCUMENT AUTHOR	DOCUMENT DATE
P777A	CCP-AK-SRS-8	Central Characterization Project for Mound Site Transuranic Waste Stored at Savannah River Site, Waste Streams: SR-MD-HET, SR-MD-SOIL, SR-MD-HOM-A, SR-MD-HOM-B, and SR-MD-HOM-C (CCP-AK-SRS-8)	Larry Porter	10/18/2010
P778A	SR-MD-HOM-A	AMWTP Form-1900, DOE CH-TRU Waste Profile for Mound Plant Solidified Acid/Caustic Waste Stored at the Savannah River Site (SR-835) (SR-MD-HOM-A)	John Rovansek, Site Project Manager for Central Characterization Project	03/04/2009
P780S	EDF RWMC-349	TSA-R Recovery Plan (EDF RWMC-349)	T. H. Johnsen	12/23/1988
P784A	CCP-PK-NTS-005	Central Characterization Project Process Knowledge Summary Report for Nevada Test Site Lynchburg Research Center Debris Waste, Waste Stream: NTLRC S5400 (CCP-PK-NTS-005)	D. K. Ploetz	12/11/2008
P785A	CCP-AK-INL-009	Central Characterization Project Acceptable Knowledge Summary Report for Idaho National Laboratory, Nevada Test Site Lawrence Livermore National Laboratory Waste, Waste Streams: ID-NTLLNL-S5400, ID-NTLLNL-S3900 (CCP-AK-INL-009)	D. K. Ploetz	05/19/2009
P786A	ID-SDA-NO3	AMWTP Form-1687, Non-AMWTP Generator Waste Profile for SDA Waste Containing Nitrate Salts (ID-SDA-NO3)	L. Davis, CWI	6/9/2009
P788S	N/A	Proving the Principle	Susan M. Stacy	2000
P790A	CCP-PK-NTS-006	Central Characterization Project Process Knowledge Summary Report for Stored Contact-Handled Transuranic Debris Waste Generated by EG&G Energy Measurements, Inc. at the North Las Vegas Facility, Waste Stream NTS-EG&G-HET (CCP-PK-NTS-006)	D. K. Ploetz	04/09/2009
P791A	CCP-PK-NTS-007	Central Characterization Project Process Knowledge Summary Report for Tonopah Test Range/Roller Coaster Project Contact-Handled Transuranic Waste, Waste Stream: NTS-TTR-HET (CCP-PK-NTS-007)	D. K. Ploetz	04/09/2009
P792A	CCP-PK-NTS-4	Central Characterization Project Process Knowledge Summary Report for Contact-Handled Transuranic Waste from Decontaminating Rocky Flats Classified Waste at the Nevada Test Site, Waste Stream: NT-RF-DECON (CCP-PK-NTS-4)	D. K. Ploetz	04/15/2009
P793A	CCP-PK-NTS-008	Central Characterization Project Process Knowledge Summary Report for Nevada Test Site Lawrence Livermore and Lawrence Berkeley National Laboratory Waste, Waste Stream: NTLLLBL-S5400 (CCP-PK-NTS-008)	D. K. Ploetz	04/15/2009

Implementing Document: MP-TRUW-8.13

TRACKING NUMBER	DOCUMENT NUMBER	DOCUMENT TITLE/DESCRIPTION	DOCUMENT AUTHOR	DOCUMENT DATE
P794A	CCP-PK-NTS-009	Central Characterization Project Process Knowledge Summary Report for Nevada Test Site Inhalation Toxicology Research Institute Waste, Waste Stream NTS-ITRI-S5310 (CCP-PK-NTS-009)	D. K. Ploetz	04/17/2009
P795A	CCP-PK-NTS-010	Central Characterization Project Process Knowledge Summary Report for Nevada Test Site Visual Examination and Repackaging Building Decon and Maintenance Waste, Waste Stream: NTVERB-S5400 (CCP-PK-NTS-010)	D. K. Ploetz	04/17/2009
P796A	AMWTP NTLBL-S5400	AMWTP Form-1900, DOE CH-TRU Waste Profile for NTLBL-S5400, Lawrence Berkeley Heterogeneous Debris (NT-211) (AMWTP NTLBL-S5400)	Mark Doherty	11/25/2008
P797A	NTLLNL-S3900	AMWTP Form-1900, DOE CH-TRU Waste Profile for NTLLNL-S3900, LLNL Solidified Sludge and Liquids (NT-212) (NTLLNL-S3900)	Mark Doherty	11/25/2008
P798A	NTLLNL-S5400	AMWTP Form-1900, DOE CH-TRU Waste Profile for NTLLNL-S5400, LLNL Heterogeneous Debris (NT-213) (NTLLNL-S5400)	Mark Doherty	11/25/2008
P799A	AMWTP NTRLC-S5400	Form-1900, DOE CH-TRU Waste Profile for NTRLC-S5400, NTS Lynchburg Heterogeneous Debris (NT-214) (AMWTP NTRLC-S5400)	Mark Doherty	01/13/2009
P800A	AMWTP NTLBL-S3900	AMWTP Form-1900, DOE CH-TRU Waste Profile for NTLBL-S3900, NTS Berkeley Solidified Liquids (NT-210) (AMWTP NTLBL-S3900)	Mark Doherty	4/22/2009
P801A	AMWTP NTS-EG&G-HET	AMWTP Form-1900, DOE CH-TRU Waste Profile for NTS-EG&G-HET, NTS EG&G Heterogeneous Debris (NT-215) (AMWTP NTS-EG&G-HET)	Mark Doherty	4/22/2009
P802A	AMWTP NTS-TTR-HET	AMWTP Form-1900, DOE CH-TRU Waste Profile for NTS-TRR-HET, NTS Roller Coaster Debris (NT-216) (AMWTP NTS-TTR-HET)	Mark Doherty	4/22/2009
P803A	AMWTP NT-RF-DECON	AMWTP Form-1900, DOE CH-TRU Waste Profile for NT-RF-DECON, NTS RF Decon Debris (NT-217) (AMWTP NT-RF-DECON)	Mark Doherty	4/22/2009
P804A	AMWTP NTLLLBL-S5400	AMWTP Form-1900, DOE CH-TRU Waste Profile for NTLLLBL-S5400, NTS Livermore and Berkeley Combined Debris (NT-218) (AMWTP NTLLLBL-S5400)	Mark Doherty	4/22/2009
P805A	AMWTP NTS-ITRI	AMWTP Form-1900, DOE CH-TRU Waste Profile for NTS-ITRI-S5310, NTS ITRI Debris (NT-219) (AMWTP NTS-ITRI)	Mark Doherty	4/22/2009
P806A	AMWTP NTVERB-S5400	AMWTP Form-1900, DOE CH-TRU Waste Profile for NTVERB-S5400, NTS Decon and Maintenance Debris (NT-220) (AMWTP NTVERB-S5400)	Mark Doherty	4/22/2009
P807A	INST-OI-68	Drum Treatment Facility Operations (INST-OI-68)	AMWTP (D. Wirkus approval)	CUR DATE

Implementing Document: MP-TRUW-8.13

TRACKING NUMBER	DOCUMENT NUMBER	DOCUMENT TITLE/DESCRIPTION	DOCUMENT AUTHOR	DOCUMENT DATE
P808S	N/A	Material Safety Data Sheet, MICRO CEL-E	Celite Corporation	01/17/2009
P809A	CCP-AK-INL-013	Central Characterization Project Acceptable Knowledge Summary Report for Idaho National Laboratory, Nevada Test Site EG&G Energy Measurements, Inc. (North Las Vegas Facility) Debris Waste, Waste Stream: ID-NTS-EG&G-HET (CCP-AK-INL-013)	Larry Porter	05/19/2009
P810A	CCP-AK-INL-010	Central Characterization Project Acceptable Knowledge Summary Report for Idaho National Laboratory, Nevada Test Site Lawrence Berkeley National Laboratory Waste, Waste Streams: ID-NTLBL-S5400, ID-NTLBL-S3900 (CCP-AK-INL-010)	D.K. Ploetz,Central Chararacerization Project, NTS	06/18/2009
P811A	CCP-AK-INL-007	Central Characterization Project Acceptable Knowledge Summary Report for Rocky Flats Ash Treated at the Brookhaven National Laboratory, Waste Stream ID-RF-BNL-ASH (CCP-AK-INL-007)	Mark Pearcy	4/18/2007
P812S	RFP-4873; CONF-9409181--9	The ignitability potential of uranium "Roaster Oxide." (RFP-4873; CONF-9409181--9)	Jerry L. Stakebake	11/01/1994
P813A	EDF-RWMC-746	Identification of ILTSF Waste Stored on Pad 2 (EDF-RWMC-746)	N/A	8/10/1994
P814A	EDF-RWMC-422	Development of Non-RFP Certification Plan (EDF-RWMC-422)	K.P. Guay	9/27/1990
P816A	ANL/CP- - 74106; DE92 007399	Characterization of Mixed CH-TRU Waste for the WIPP Experimental Test Program Conducted at ANL-W (ANL/CP- - 74106; DE92 007399)	C. C. Dwight, G. C. McClellan, K. P. Guay, J. C. Courtney, and M. J. Duff	1992
P817A	CCP-AK-LANL-006	Central Characterization Project Acceptable Knowledge Summary Report for Los Alamos National Laboratory TA-55 Mixed Transuranic Waste, Waste Streams: LA-MHD01.001, LA-CIN01.001, LA-MIN02-V.001 and LA-MIN04-S.001 (CCP-AK-LANL-006)	Larry Porter	05/04/2010
P818A	CCP-AK-INL-011	Central Characterization Project Acceptable Knowledge Summary Report for Idaho National Laboratory, Nevada Test Site Lynchburg Research Center Debris Waste, Waste Stream: ID-NTLRC-S5400 (CCP-AK-INL-011)	Larry Porter	08/13/2009
P819A	CCP-AK-INL-012	Central Characterization Project Acceptable Knowledge Summary Report for Idaho National Laboratory, Contact-Handled Transuranic Debris Waste from Decontaminating Rocky Flats Classified Waste at the Nevada Test Site, Waste Stream: ID-NT-RF-DECON (CCP-AK-INL-012)	Larry Porter	08/04/2009

Implementing Document: MP-TRUW-8.13

TRACKING NUMBER	DOCUMENT NUMBER	DOCUMENT TITLE/DESCRIPTION	DOCUMENT AUTHOR	DOCUMENT DATE
P820A	CCP-AK-INL-014	Central Characterization Project Acceptable Knowledge Summary Report for Idaho National Laboratory, Tonopah Test Range/Roller Coaster Project Contact-Handled Transuranic Waste, Waste Stream: ID-NTS-TTR-HET. (CCP-AK-INL-014)	D.K. Ploetz	07/15/2009
P821A	CCP-AK-INL-015	Central Characterization Project Acceptable Knowledge Summary Report For Idaho National Laboratory Nevada Test Site Lawrence Livermore and Lawrence Berkeley National Laboratory Waste, Waste Stream: ID-NTLLLBL-S5400 (CCP-AK-INL-015)	Larry Porter	08/06/2009
P822A	CCP-AK-INL-016	Central Characterization Project Acceptable Knowledge Summary Report for Idaho National Laboratory Nevada Test Site Inhalation Toxiology Research Institute Waste, Waste Stream: ID-NTS-ITRI-S5310 (CCP-AK-INL-016)	Larry Porter	07/27/2009
P823A	CCP-AK-INL-017	Central Characterization Project Acceptable Knowledge Summary Report for Idaho National Laboratory Nevada Test Site Visual Examination and Repackaging Building Decon and Maintenance Waste, Waste Stream: ID-NTVERB-S5400 (CCP-AK-INL-017)	Larry Porter	08/06/2009
P824A	EDF-RWMC-635	Overburden Excavation Plan (EDF-RWMC-635)	G.R. Berglund	6/9/1993
P825A	EDF-RWMC-745	Waste Box Liners at the INEL (EDF-RWMC-745)	M. M. Patterson	7/21/1994
P826A	EDF-370	TRU Waste Quantities and Composition (EDF-TWTF 21) (EDF-370)	R. L. Devries	6/12/1989
P827A	EDF-RWMC-690	Alpha Activity Distribution Due To Selected TRU and nonTRU Source Materials at 15 Years Post Purification Date (RWMC EDF 629 - Rev. 1) (EDF -RWMC-690)	G. K. Becker	12/3/1993
P828A	EDF-334	TSA-R Pad Stack Cover Safety Evaluation (EDF-334)	C. L. Miller	8/25/1988
P829A	EDF-154	<100 nCi/gm Waste in Retrievable Storage at the RWMC (EDF-154)	H. M. Batchelder and R. M. Brown	07/19/1983
P830A	N/A	Condition of TRU-Waste Containers at AMWTP	Rick Denning	N/A
P831A	N/A	Contact-Handled Transuranic Waste Packaging Instructions	DOE Office of Environmental Management's Office of Regulatory Compliance	10/08/2008
P832A	RF-P178 (RFP-446)	Evaluation and Treatment of an Acute Internal Exposure to Plutonium (RF-P178 (RFP-446))	The Dow Chemical Company	N/A

Implementing Document: MP-TRUW-8.13

TRACKING NUMBER	DOCUMENT NUMBER	DOCUMENT TITLE/DESCRIPTION	DOCUMENT AUTHOR	DOCUMENT DATE
P834A	INEEL/EXT-02-00527	Radiological Acceptable Knowledge Report for Drums 728 through 737 (INEEL/EXT-02-00527)	Shaw Environmental	07/01/2002
P835A	N/A	RIBRA	N/A	2006
P836A	CCP-PK-GEV-400	Central Characterization Project Process Knowledge Summary Report For General Electric Vallecitos Nuclear Center Waste Stream: GEVNC.02 – Contact-Handled Hot Cell Debris Waste (CCP-PK-GEV-400)	Larry Porter	11/19/2009
P837A	N/A	Material Safety Data Sheet for Carbowax	MetLab Corporation	1/1/2008
P838A	DOE/TRU-09-3425	Annual Transuranic Waste Inventory Report - 2009 (DOE/TRU-09-3425)	Los Alamos National Laboratory - Carlsbad Operations (LANL-CO)	NOT DATED
P839A	CCP-PK-LLNL-001	Central Characterization Project Process Knowledge Summary Report for Lawrence Livermore National Laboratory, Waste Streams: LL-MM001-S5400, LL-W019-S3900, LL-T004-S3141 (CCP-PK-LLNL-001)	Larry Porter, Central Characterization Project (CCP)	3/22/2010
P840A	N/A	MFC/ANL-W IWTS container Profiles; Filed by Corresponding IWTS Tracking Material and Characterization Profile Numbers.	MFC	MULTIPLE
P841A	N/A	Waste Stream Profile Package for Solidified Plutonium Recovery Incinerator Waste (BN222)	AMWTP	01/29/2010
P842A	INL-EXT-10-17600	Process Knowledge Summary Report for Materials and Fuels Complex Contact-Handled Transuranic Debris Waste. (INL-EXT-10-17600)	R. P. Grant, T.C. Couch, S. Butler-Materials and Fuels Complex (MFC)	02/01/2013
P843A	FMF-OI-015	MFC FMF Operation Instructions (OI), General Facility Waste (FMF-OI-015)	MFC	11/3/2008
P845A	5399N	IWTS Material and Waste Characterization Profile: Transuranic samples from the AL. (5399N)	Charlyss D. Lee	8/28/2007
P846A	RF-P222	Colormetric Determination of Iron in Plutonium Metal using a Nitrobenzene Extraction Technique. (RF-P222)	C.E. Plock and C.E. Caldwell	12/20/1967
P847S	EGG-WM-8727	Subsurface Disposal Area (SDA) Waste Identification (1952-1970 Emphasis) (EGG-WM-8727)	M. J. Vigil, Environmental Restoration Program, EG&G Idaho, Inc.	01/24/1990

Implementing Document: MP-TRUW-8.13

TRACKING NUMBER	DOCUMENT NUMBER	DOCUMENT TITLE/DESCRIPTION	DOCUMENT AUTHOR	DOCUMENT DATE
P849A	5419N.R1	IWTS Material Profile No. 5419N.R1, TRU, >100 nCi/g, from FMF, Building 704, 9-29-09 (5419N.R1)	Jonathan Jacobsen, WGS	3/31/2010
P850A	5274N.R1	IWTS Material Profile No. 5274N.R1: Misc. Waste from Waste Form Testing, Alpha, & Special Projects Glovebox, etc., 9/29/09 (5274N.R1)	Matthew Allen	3/31/2010
P853A	CCP-PK-RL-101	Central Characterization Project Process Knowledge Summary Report For Hanford Plutonium Finishing Plant Contact-Handled Transuranic Debris Waste, 85-Gallon Overpacked Drums, Waste Stream: MPFPDD (CCP-PK-RL-101)	Larry Porter, Central Characterization Project (CCP)	06/04/2010
P854A	CCP-PK-RL-102	Central Characterization Project Process Knowledge Summary Report For The Hanford 325 Building Radiochemical Processing Laboratory Contact-Handled Transuranic Debris Waste, 85 Gallon Overpacked Drums, Waste Stream: RLM325D.001 (CCP-PK-RL-102)	Larry Porter, Central Characterization Project (CCP)	06/04/2010
P855A	CCP-PK-RL-103	Central Characterization Project Process Knowledge Summary Report For Hanford 231-Z Building Contact-Handled Transuranic Debris Waste, 85-Gallon Overpacked Drums, Waste Stream: RLM231ZD.001 (CCP-PK-RL-103)	Larry Porter, Central Characterization Project (CCP)	06/04/2010
P856A	RPT-TRUW-03	Drum Assay Technical Review Report (RPT-TRUW-03)	AMWTP	06/27/2012
P857A	RPT-TRUW-82	Acceptable Knowledge Document for Hanford Debris Waste Shipped to AMWTP (RPT-TRUW-82)	AMWTP	05/04/2010
P858A	N/A	ANL-W Radiological Control Manual	Argonne National Laboratory - West	12/01/1994
P859S	RPT-82	Supercompactor Liquid Treatment Capabilities, Evaluation and Conclusion (RPT-82)	AMWTP	6/2/2009
P860S	N/A	Settlement Agreement: Public Service Company of Colorado v. Batt	State of Idaho	10/16/1995
P861A	ID-MFC-S5490	AMWTP Form-1900, AMWTP Offsite Waste Stream Profile for ID-MFC-S5490, MFC CH-TRU Heterogeneous Debris Waste (IDC AW-167) (ID-MFC-S5490)	Jack Weisgerber	12/06/2010
P862S	www.globalsecurity.org/wmd/facility/idaho_inel-fac	Web site: Idaho National Laboratory, Materials & Fuels Complex (www.globalsecurity.org/wmd/facility/idaho_inel-fac)		4/19/2010
P863S	MCP-557	Idaho Cleanup Project Records Management (MCP-557)		9/30/2009

Implementing Document: MP-TRUW-8.13

TRACKING NUMBER	DOCUMENT NUMBER	DOCUMENT TITLE/DESCRIPTION	DOCUMENT AUTHOR	DOCUMENT DATE
P864S	PLN-3318	Records Management Plan for Waste Generator Services (PLN-3318)	INL, BEA	10/15/2009
P865S	W0102-0164-AP	NT-AP-05 TWCP Training Plan (W0102-0164-AP)	Argonne National Laboratory - West, TRU Programs	11/1/2001
P866S	MSDS 1003 and MSDS 1002	Material Safety Data Sheet, PIG Acid Encapsulating/neutralizing, absorbents, February 5, 2007; Material Safety Data Sheet, PIG Packing Material, absorbents, February 1, 2007 (MSDS 1003 and MSDS 1002)	New Pig Corp.	02/01/2007
P867S	MSDS-088, MSDS-092, MSDS-089	SPILL-X-S Agent; SPILL-X-A Agent; SPILL-X-C Agent; (MSDS-088, MSDS-092, MSDS-089)	ANSUL Inc.	9/1/2009
P868A	N/A	AMWTP Mission Statement for October 2009 through Jan 2010	AMWTP	NOT DATED
P869A	AMWTP GEVNC.02	AMWTP Form-1900, DOE CH-TRU Waste Profile for GEVNC.02, GEVNC Hot Cell 4 Debris (IDC GV-222) (AMWTP GEVNC.02)	Mark Doherty, Central Characterization Project (CCP)	04/19/2010
P870A	AMWTP LL-W019-S3900	AMWTP Form-1900, DOE CH-TRU Waste Profile for LL-W019-S3900, Lawrence Livermore National Laboratory Solidified Inorganics and Solidified Organics (LL-212) (AMWTP LL-W019-S3900)	Mark Doherty, Central Characterization Project (CCP)	05/04/2010
P871A	AMWTP LL-M001-S5400	Form-1900, DOE CH-TRU Waste Profile for LL-M001-S5400, Lawrence Livermore National Laboratory Heterogeneous Debris (LL-213) (AMWTP LL-M001-S5400)	Mark Doherty, Central Characterization Project (CCP)	05/04/2010
P872A	AMWTP LL-T004-S3141	AMWTP Form-1900, DOE CH-TRU Waste Profile for LL-T004-S3141, Lawrence Livermore National Laboratory Salts (LL-221) (AMWTP LL-T004-S3141)	Mark Doherty, Central Characterization Project (CCP)	05/04/2010
P875S	W0102-0165-AP	Collection, Review, and Management of Acceptable Knowledge (AK) for ANL -W TRU Waste (W0102-0165-AP)	ANL-W	6/12/1998
P877S	W0102-0168-AP	NT-AP-09, TWCP Visual Exam Expert (VEE) Functions and Process (W0102 -0168-AP)	ANL-W	11/1/2001
P878S	N/A	MSDS Floor Absorbent (100300.0)(AKA Fullers Earth, Oil Dri)	Oil Dri Corporation of America	3/19/1999
P879S	0	Material Safety Data Sheet for Vermiculite absorbent. (0)	Therm-O-Rock West, Inc.	10/23/2001
P880S	N/A	MSDS -- Petroset II/Petroset IIG	Fluid Tech, Inc.	8/1/2006
P881S	N/A	MSDS -- Fluid Tech, Aquaset (sodium montmorillonite) and Aquaset II-G (sepiolite)	Fluid Tech, Inc.	01/01/2005

Implementing Document: MP-TRUW-8.13

TRACKING NUMBER	DOCUMENT NUMBER	DOCUMENT TITLE/DESCRIPTION	DOCUMENT AUTHOR	DOCUMENT DATE
P882S	N/A	MSDS -- Ultrasorb, Optisorb, 244, 248 and Diatomaceous Earth-RP	Moltan Company	8/22/1997
P883A	MPFPDD	AMWTP Form-1900, DOE CH-TRU Waste Profile for MPFPDD, Hanford Plutonium Finishing Plant (PFP) Heterogeneous Debris (RL-712) (MPFPDD)	Mark Doherty, Central Characterization Project (CCP)	06/08/2010
P884A	RLM325D.001	AMWTP Form-1900, DOE CH-TRU Waste Profile for RLM325D.001, 325 Building Heterogeneous Debris (RL-714) (RLM325D.001)	Mark Doherty, Central Characterization Project (CCP)	06/08/2010
P885A	RLM231ZD.001	AMWTP Form-1900, DOE CH-TRU Waste Profile for RLM231ZD.001, Hanford 231-Z Building Heterogeneous Debris (RL-716) (RLM231ZD.001)	Mark Doherty, Central Characterization Project (CCP)	06/08/2010
P887S	MCP-17000	Waste Generator Services Waste Management (MCP-17000)	INL BEA	10/20/2009
P888A	WM-PD-85-014	Waste Characterization for INEL Remote-Handled/Special-Case Stored Transuranic Wastes (WM-PD-85-014)	Dennis A. Peterson	11/01/1985
P889S	Docket No: A-98-49, II-A4-66	FINAL REPORT WASTE CHARACTERIZATION INSPECTION REPORT EPA BASELINE INSPECTION NO. EPA-AMWTP-03.06-8 OF THE ADVANCED MIXED WASTE TREATMENT PROJECT FACILITY AT THE IDAHO NATIONAL LABORATORY March 28–30, 2006 (Docket No: A-98-49, II-A4-66)	EPA	09/00/2006
P890A	RPT-TRUW-79	Acceptable Knowledge Document for Materials and Fuels Complex (MFC) Waste (RPT-TRUW-79)	AMWTP	07/22/2010
P891A	RPT-670	RPT-670, CH2M-WG Idaho Process Knowledge Summary Report for CH TRU Waste and Mixed Low-Level Waste Generated at INTEC and RWMC Analytical Laboratories in Support of AMWTP Sampling Activities, Waste Matrix Codes: S5490 and S3900 (RPT-670)	Idaho Cleanup Project	11/00/2010
P892A	CCP-AK-RL-101	Central Characterization Project AK Summary Report for Hanford Plutonium Finishing Plant (PFP) Contact-Handled Debris Waste From Decontamination and Decommission; Waste Stream MPFPDD (CCP-AK-RL-101)	Larry Porter, CCP	01/15/2010
P893A	RLM325D.001	WSPF for Hanford mixed waste from Building 325 (RLM325D.001)	R. P. Dunn	05/16/2007
P894A	RLM231ZD.001	WSPF for Hanford mixed waste from Building 231-Z (RLM231ZD.001)	R. P. Dunn	08/30/2007

Implementing Document: MP-TRUW-8.13

TRACKING NUMBER	DOCUMENT NUMBER	DOCUMENT TITLE/DESCRIPTION	DOCUMENT AUTHOR	DOCUMENT DATE
P895A	ID-GEVNC-02	GENERAL ELECTRIC VALLECITOS NUCLEAR CENTER HOT CELL DEBRIS WASTE Waste Stream: ID-GEVNC-02 (ID-GEVNC-02)		2010
P896A	HW 73112	325 Building Standard Operating Procedure (HW 73112)	E.A. Berreth	09/15/1962
P897A	325-HDLLW-1	Removal of High Dose Low Level Waste (Replaces PNL-ALO-701) (325-HDLLW-1)	R.T. Steele	09/30/1994
P898A	SAL-84-5	Disposal of Contaminated and Radioactive Wastes from the SAL (SAL-84-5)	R.T. Steele	04/13/1994
P899A	SAL-84-7	Handling and Opening Radioactive Material Shipments (SAL-84-7)	R.T. Steele	04/13/1994
P900A	136445	LAZAR Research Laboratories, Inc. - Instructions for PHR-146 Micro Combination pH Electrode (136445)	LAZAR Research Laboratories, Inc.	NONE
P901S	227296-001	Ross pH Electrodes Instruction Manual (227296-001)	Orion Research Inc.	1999
P902A	502700-031	Model 94-09, 96-09 Fluoride/Combination Fluoride Electrodes Instruction Manual (502700-031)	Orion Research Inc	1991
P903A	502700-078	Chloride/Chloride Combination Electrode Instruction Manual (502700-078)	Orion Research Inc	1999
P904A	325-PU-Purify-1	Purification of Plutonium using Lewatit UMP-950 Ion Exchange Resin (325-PU-Purify-1)	J. L. Ryan	06/12/1998
P905A	MCC-TP-19	Leaching Tests using the PCT Method (MCC-TP-19)	K. H. Olson	04/01/1993
P906A	RPL-PIP-Ceramic Test-1	Evaluation of Monolithic Radioactive Material Immobilization Form Behavior in Fume Hoods (RPL-PIP-Ceramic Test-1)	R.D. Scheele	05/01/2001
P907S	RPL-EMSP-1	Preparation and Viewing of Samples by Microscopy (RPL-EMSP-1)	R.D. Scheele	11/28/2000
P908A	D 1179-99	Standard Test Method for Fluoride in Water (D 1179-99)	N/A	02/01/1999
P909S	PNNL-RPG-268	Solids Analysis X-Ray Diffraction (Replaces PNL-ALO-268) (PNNL-RPG-268)	E.D. Jenson	02/01/2000
P910S	ASTM C1220-98	Plutonium Immobilization Project Exceptions to ASTM C1220-98 as Pertaining to Static Leach Testing of Monolithic Ceramic Specimens (ASTM C1220-98)	D. Strachan	11/01/2000
P911A	ICN-PNL-ALO-508R0.2	Laboratory Procedure for Operation of the Differential Scanning, Calorimeter (DSC), Thermo gravimetric Analyzer (TG), and High Temperature Differential Thermal Analyzer (DTA) and DSC (ICN-PNL-ALO-508R0.2)	R.D. Scheele	01/01/1998

Implementing Document: MP-TRUW-8.13

TRACKING NUMBER	DOCUMENT NUMBER	DOCUMENT TITLE/DESCRIPTION	DOCUMENT AUTHOR	DOCUMENT DATE
P912S	RPL-PIP-1	Preparation, Processing and Testing of Radioactive Glass and Ceramics (RPL-PIP-1)	R.D. Scheele	07/01/2001
P913A	RPL-PIP-2	Fabrication of Ceramic Samples (RPL-PIP-2)	W.C. Buchmiller	04/01/1998
P914A	RPL-PIP-3	Flouride, Chloride, and pH Measurements with Specific Ion Electrode (RPL-PIP-3)	R.D. Scheele	06/01/2001
P915A	RPL-PIP-4	Mounting Radioactive Samples in PIP XRD sample holder base (RPL-PIP-4)	R.D. Scheele	08/01/2002
P916A	RPL-PIP-5	Measurement of Releases to a Static Aqueous System (3-Day MCC Static Leach Test) (RPL-PIP-5)	W.D. Buchmiller	06/01/2001
P917A	APEL-PIP-1	Evacuated Impregnation Method for Apparent Specific Gravity, Bulk Density, and Apparent Porosity Determinations of Consolidated Solids (APEL-PIP-1)	W.C. Buchmiller	01/01/1999
P918A	APEL-PIP-2	Geometric Density Determination of Consolidated Solids (APEL-PIP-2)	R.D. Scheele	05/01/2001
P919A	RPL-PIP-SPFT-1	Transfer of SPFT and PUF Vessels Containing Crushed Pu- or Pu-238 Containing Materials (RPL-PIP-SPFT-1)	V.L. LeGore	05/01/2000
P920A	RPL-MAS-NMR	Preparation of Nondispersible Solid Samples Containing Radioisotopes for Magic-Angle Spinning Nuclear Magnetic Resonance Spectroscopy Measurements (RPL-MAS-NMR)	H.M. Cho	08/01/2003
P921A	RPL-XRD-PIP	Operation of Scintag Pad-V X-Ray Diffractometer (RGD#62) (RPL-XRD-PIP)	H.T. Schaef	02/01/2003
P922A	GDSP-01-BET	Procedure for Surface Area Measurement using BET with the Quantachrome Gas Analyzer in the SAL (GDSP-01-BET)	E. Buck	01/01/2003
P924A	n/a	MSDSs for Phosphoric acid, Sodium hydroxide and Quick-Zorb (n/a)	n/a	01/03/2006
P925A	MSDS # 0151938	MSDS for Dry Chemical Fire Extinguisher Powder (Ammonium Phosphate Monobasic) (MSDS # 0151938)	Fisher Scientific	08/31/2000
P926A	MSDS # 7653	MSDS Number 7653-2, SHELLSOL D60 (MSDS # 7653)	Shell Chemical Company	08/15/2001
P927S	SAL-84-8	Bag/In and Out Operations Shielded Analytical Laboratory Glove Box (SAL-84-8)	R.T. Steele	04/13/1994
P928A	511-4	Operation of Gamma Spectroscopy Equipment (511-4)	G.J. Lumetta	01/01/1996
P929A	RPL-PIP-SPFT	Operation of Single Pass Flow Through Experiment (RPL-PIP-SPFT)	D.M. Wellman	05/01/2003

Implementing Document: MP-TRUW-8.13

TRACKING NUMBER	DOCUMENT NUMBER	DOCUMENT TITLE/DESCRIPTION	DOCUMENT AUTHOR	DOCUMENT DATE
P930A	APEL-PIP-3	Archimedes (Buoyancy) Method for Apparent Specific Gravity Determinations of Consolidated Solids (APEL-PIP-3)	W.C. Buchmiller	01/01/1999
P931A	APEL-PIP-4	Gas Pycnometry Method for Apparent Specific Gravity Determinations of Consolidated Solids (APEL-PIP-4)	R.D. Scheele	08/01/2001
P932A	RPG-94-1	Response to Vacuum Alarms in RPL Glove boxes and Use of RPL Glove box Airlock (RPG-94-1)	R.D. Scheele	07/16/1999
P933S	325-A-20	Dry Waste Removal from the Cells Using the Drum Load Out Assembly (325-A-20)	G.H. Bryan	11/01/1995
P934A	RPL-PIP-SPFT-3	Installation of In-Line Back Flow Preventors and/or In-Line Isolation Valves on Single Pass Flow Through Systems (RPL-PIP-SPFT-3)	H.T. Schaef	
P935A	GEN-325-WM1	Routine Management, Storage and Disposal of Hazardous, Low-Level Radioactive or Mixed Waste (GEN-325-WM1)	W.B. Larson	03/27/1996
P936A	RAD-00006	Transmittal of Variance RAD-00006 (RAD-00006)	R.D. Scheele	02/01/2001
P937A	WHC-MR-0388	Past Practices Technical Characterization Study-300 Area-Hanford Site (WHC-MR-0388)	M.S. Gerber	12/01/1992
P938A	WHC-SA-2772-FP	A History of Solid Waste Packaging at the Hanford Site (WHC-SA-2772-FP)	D.R. Duncan, D.I. Weyns-Rollosson, J.A. Pottmeyer, T.J. Stratton	02/01/1995
P939A	PNL-7748	Safety Analysis Report for 325 Building (PNL-7748)	Pacific Northwest Laboratory	01/01/1992
P940A	WHC-EP-0696	Characterization of Past and Present Waste Streams from the 325 Radiochemistry Building (WHC-EP-0696)	D.R. Duncan, J.A. Pottmeyer, M.I. Weyns-Rolloson, K.D. Dicenso, and D.S. DeLorenzo	12/01/1993
P941A	PNL-MA-661	Facility Effluent Monitoring Plan for the 325 Facility (PNL-MA-661)	M.Y. Ballinger and T.D. Chikalla	11/01/1994
P942A	DOE/RL-92-35	Hanford Facility Dangerous Waste Permit Application, 325 Hazardous Waste treatment Units (DOE/RL-92-35)	Pacific Northwest National Laboratory	07/01/1997
P943A	HNF-EP-0649	Characterization of the 618-11 Solid Waste Burial Ground, Disposed Waste, and Description of the Waste-Generating Facilities (HNF-EP-0649)	J.A. Demiter and W.O. Greenhalgh	10/01/1997
P944A	MG-28	Analytical Chemistry Laboratory Manual, Volume 2, Analytical Chemistry Methods for Mixed Uranium-Plutonium Oxide Fuel (MG-28)	W.L. Delvin	10/01/1978

Implementing Document: MP-TRUW-8.13

TRACKING NUMBER	DOCUMENT NUMBER	DOCUMENT TITLE/DESCRIPTION	DOCUMENT AUTHOR	DOCUMENT DATE
P945A	HNF-EP-0063	Hanford Site Solid Waste Acceptance Criteria (HNF-EP-0063)	J.B. Bolles	05/01/2003
P946A	HNF-3461	Hanford Site Transuranic Waste Management Program Acceptable Knowledge Documentation for Retrievably Stored Contact-Handled Waste (HNF-3461)	R. Clinton	10/01/2006
P947A	PNNL-13341	Testing and Analysis of Consolidated Sludge Samples from the 105 K East Basin Floor (PNNL-13341)	P.R. Bredt, C.H. Delegard, A.J. Schmidt, K.L. Silvers	12/01/1999
P948A	PNNL-11738	Organic Analysis Progress Report FY 1997 (PNNL-11738)	S. A. Claus, K.E. Grant, V. Hoopes, G.M. Mong, R. Steele, D. Bellofatto, and A. Sharma	04/01/1998
P949A	n/a	Inorganic and Radiochemical Analysis of 241-C-104 Tank Waste (n/a)	S.K. Fisdum, C.J. Aringa, J.P. Bramson, K.J. Carson, J.R. DesChane, O.T. Farmer, L.R. Greenwood, F.V. Hoopes, R.T. Ratner, D.R. Sanders, M.J. Steele, R.T. St	NONE
P950A	PNNL-12157	Facility Effluent Monitoring Plan for the 325 Radiochemical Processing Laboratory (PNNL-12157)	PNNL	03/01/1999
P951A	n/a	MSDS for commercial products (n/a)	Various	Various
P952A	HNF-2600	Hanford Site Transuranic Waste Certification Plan (HNF-2600)	Hanford	12/29/2005
P953A	RPT-DSA-02	Documented Safety Analysis (RPT-DSA-02)	AMWTP	Current Da
P954A	HNF-EP-0924	History and Stabilization of the Plutonium Finishing Plant (PFP) Complex, Hanford Site (HNF-EP-0924)	M.S. Gerber	03/01/1997
P955A	Vol. 35, No. 222	35 FR 17530-17533, 52 FR 5992-6001, 53 FR 17709, 58 FR 12342-12347, 58 FR 64783, 59 FR 10439 (Vol. 35, No. 222)	United States Government	1970
P956A	99-WPD-219	Low Level or Transuranic Waste Classification of Hanford Tank Waste Sample Test Residues (99-WPD-219)	T.L. Moore	03/01/1999
P957A	WA7890008967	Hanford Site Operating Permit, Operable Unit 5 - 325 Hazardous Waste Treatment Units (WA7890008967)	Fluor Hanford	01/01/2007

Implementing Document: MP-TRUW-8.13

TRACKING NUMBER	DOCUMENT NUMBER	DOCUMENT TITLE/DESCRIPTION	DOCUMENT AUTHOR	DOCUMENT DATE
P958A	HNF-SD-WM-PLN-119	Tank Farms Solid Waste Characterization Guide with Sampling and Analysis Plan Attachment (HNF-SD-WM-PLN-119)	J.T. Quigley	03/01/1997
P959A	BNWL-460	Radioiodine Control During Reprocessing of Short-Cooled Irradiated Neptunium-237 Aluminum Alloy Target Elements (BNWL-460)	W.O. Greenhalgh	04/01/1967
P960A	WHC-MR-0435	The Hanford Site: An Anthology of Early Histories (WHC-MR-0435)	M.S. Gerber	10/00/1993
P961A	CP-14640	231-Z Building Documented Safety Analysis (CP-14640)	E.N. Dodd, III	10/00/2005
P963A	PNL-3336/UC-70	Vibratory Finishing as a Decontamination Process (PNL-3336/UC-70)	M.W. McCoy	10/01/1980
P964A	n/a	TRU Waste Packaging Requirements and Certification (n/a)	M.W. McCoy	07/01/1988
P965A	HNF-4022	231-Z Safety Analysis and Documentation for Characterization (HNF-4022)	R.W. Bailey	04/26/1999
P966A	HNF-SD-CP-BIO-001	231-Z Basis for Interim Operation (HNF-SD-CP-BIO-001)	R.W. Bailey	10/03/1997
P967A	N/A	Determining Whether Transuranic Waste is Defense Waste	R.P. Detwiler	04/00/2001
P968A	N/A	Finding a Balance at the Department of Energy, Proceedings of a Workshop held November 29, 1999	J. Weeks, ed.,	09/00/2000
P969A	WHC88-00032 ADD1	Addendum to Isotopics per Can for Mark IA and Mark IV Fuel (WHC88-00032 ADD1)	P. Dessaules	07/19/1988
P970A	PNL-10113/UC-802	Radiochemical Analyses of Several Spent Fuel Approved Testing Materials (PNL-10113/UC-802)	R.J. Guenther, D.E. Blahnik, N.J. Wildung	09/00/1994
P971A	WSRC-TR-2004-00016	Characterization of Uranium in Archived 2H Evaporator Scale (WSRC-TR-2004-00016)	M.C. Duff	02/24/2004
P972A	WHC-SD-CP-SAR-021	PFP Final Safety Analysis Report (WHC-SD-CP-SAR-021)	J.E. Shapley	N/A
P973A	PDF-Z190-00004	Thermal Stabilization Process Flowsheet Room 230A, 234-5 Building (PDF-Z190-00004)	G.R. Whittman	10/01/1994
P974A	ZO-160-033	Plant Operating Procedure, Oxidize Plutonium Metal in Glovebox HC-21-C and HA-21-I (ZO-160-033)	Rockwell Hanford Operations	11/28/1987
P975A	ZO-160-032	Stabilize Reacitve Scrap (ZO-160-032)	n/a	08/26/1982
P976A	DOE/RL-2004-05	Engineering Evaluation/Cost Analysis for the Plutonium Finishing Plant Above-Grade Structures (DOE/RL-2004-05)	n/a	09/01/2004
P977A	DRAFT	242-Z Waste Treatment Facility - Draft (DRAFT)	D.C. Lini	12/23/2003

Implementing Document: MP-TRUW-8.13

TRACKING NUMBER	DOCUMENT NUMBER	DOCUMENT TITLE/DESCRIPTION	DOCUMENT AUTHOR	DOCUMENT DATE
P978A	ARH-CD-239	Fabrication Oil Disposal (ARH-CD-239)	D.A. Dodd	02/17/1975
P979A	HNF-26402	Historical Information - PFP Liquid Organic Disposal as 20 Year Retrievable TRU Waste (HNF-26402)	M.W. Gibson	06/01/2005
P980A	HNF-10638	PFP Impure Plutonium Oxide: Characterization of Items with greater than 30 & less than 85 Weight Percent Plutonium (HNF-10638)	D.C. Lini and L.H. Rodgers	03/01/2002
P981A	RHO-LD-114	Existing Data on the 216-Z Liquid Waste Sites (RHO-LD-114)	K.W. Owens	05/01/1981
P982A	HNF-9734	Data Quality Objectives Process for Disposition of Sand, Slag, and Crucible Materials Stored at the Plutonium Finishing Plant (HNF-9734)	A.M. Hopkins	12/01/2003
P983A	DRAFT	242-Z Waste Treatment Facility (DRAFT)	D.C. Lini	12/29/2003
P984A	ZO-169-031	Handling of Pu Contaminated, Acid Soaked Rags in Hood 5 (ZO-169-031)	Plutonium Finishing Plant	01/01/1981
P985A	ARH-ST-141	Decommissioning of Division of Military Application (DMA) Equipment at Hanford - Summary Report: June 1977 (ARH-ST-141)	M.N. Raile	06/01/1977
P986A	ZO-160-030	Handling of Pu Contaminated, Acid Soaked Rags (ZO-160-030)	Plutonium Finishing Plant	Multiple
P987A	HW-82632	Critical Mass Specification, Waste Treatment Facility, Buildings 241-Z and 242-Z (HW-82632)	R.J. Sloat	06/04/1964
P988A	HW-76399	Process Design Basis for Fabrication Oil Storage and Sampling Facility, 234-5 Building (HW-76399)	D.D. Wodrich	02/13/1963
P989A	HW-74350	Recovery of Plutonium from Fabrication Oil (HW-74350)	R.S. Kingsley	08/01/1962
P990A	WHC-MR-0521	The Plutonium Production Story at the Hanford Site: Processes and Facilities History (WHC-MR-0521)	M.S. Gerber	06/01/1996
P991A	WHC-IP-0791	Historical Report on the Retrievably Stored Division of Military Application Equipment at the Hanford Site (WHC-IP-0791)	J.A. Demiter, D.R. Duncan, W.E. Meeuwsen, R.W. Reddinger, M.S. Zvonar	12/11/1991
P992A	DOE/RL-97-1047	WST History of the Plutonium Production Facilities at the Hanford site Historic District 1943-1990 (DOE/RL-97-1047)	T.E. Marceau, D.W. Harvey	06/01/2002
P993A	ZO-160-034	Screen Dry Glovebox Scrap (1995) Stabilize Material Handling (1996) (ZO-160-034)	n/a	Multiple
P994A	OSD-Z-184-00006	Operating Specifications for Plutonium Finishing Plant: Thermal Stabilization Glovebox HC-21C (OSD-Z-184-00006)	M.W. Gibson	07/14/1994

Implementing Document: MP-TRUW-8.13

TRACKING NUMBER	DOCUMENT NUMBER	DOCUMENT TITLE/DESCRIPTION	DOCUMENT AUTHOR	DOCUMENT DATE
P995A	PFD-Z-190-00001	Z-Plant RMA Oxide Line Flowsheet (PFD-Z-190-00001)	S.L. Yarbo	NONE
P996A	PFD-Z-190-0004	PFP Process Control Engineering (PFD-Z-190-0004)	M. Gibson	1998
P997A	WHC-EP-0829	Estimation and Characterization of D&D Solid Waste Expected from PFP (WHC-EP-0829)	J.S. Miller, J.A. Pottmeyer, T.J. Stratton, D.R. Duncan	01/01/1995
P998A	CPS-Z-165-82090	Scrap Stabilization and Calcination Glovebox 4, Room 41, 236-Z Building (CPS-Z-165-82090)	Plutonium Finishing Plant	05/04/1987
P999A	CPS-Z-80715	Glovebox MT-5: Dissolving and Leaching (CPS-Z-80715)	Plutonium Finishing Plant	NONE
U001A	N/A	The Rocky Flats Historical Public Exposure Studies Phase II: Toxicity Assessment and Risk Characterization (Draft). Technical Memorandum. Task 2. An analysis of Historical Source Term Estimates for Carbon Tetrachloride at the Rocky Flats Plant.	P. D. McGavran, K. R. Meyer, P. G. Voilleque, and M. Dreicer.	2/1/1996
U002A	RAC Report #2-CDPHE-RFP-1996-Draft	Rocky Flats Dose Reconstruction Project Phase II Toxicity Assessment and Risk Characterization (Draft). Task 2: The Rocky Flats Plant 903 Area Plutonium Source Term Development (RAC Report #2-CDPHE-RFP-1996-Draft)	H. R. Meyer, S. K. Rope, Terrol F. Winsor, P. G. Voilleque, K. R. Meyer, L. A. Stetar, J. E. Till, and J. M. Weber.	2/1/1996
U003A	N/A	Rocky Flats Plant TRU Mixed Waste Plan (Draft)	WASTREN, Inc	1/31/1990
U004A	RO 93-002	Evaluation of Residue Drum Storage Safety Risks (RO 93-002)	W. V. Conner.	9/27/1993
U005A	EDF-RWMC-563	Results of the SWEPP Certified Waste Sampling Program for FY-1991 (EDF-RWMC-563)	EG&G Idaho, Inc	08/01/1992
U006A	N/A	Memorandum to W. D. Reinhart. "Waste Shipment Summary for April Cost Month 1987."	F. G. Trevino	4/27/1987
U007A	N/A	VOC Gas Chromatography/Mass Spectrometry Results. WIPP Experimental Waste Characterization Program data printout.	EG&G Rocky Flats, Inc.	6/3/1994
U008A	CRDL-950703-001	Improvements to a 55-Gallon DOT 17C Shipping Container for Alpha-Emitting Transuranium Waste. (CRDL-950703-001)	P. A. Patton and J. W. Lindsay.	12/29/1972
U009A	PSD 86-056	Characterization of Spent HEPA Filters from Rocky Flats Plant (PSD 86-056)	P. M. Arnold	9/1/1986
U010A	PSD88-038	OASIS Solidification and OFF Gas Analysis (PSD88-038)	R. V. Harder and A. J. Johnson.	9/1/1988

Implementing Document: MP-TRUW-8.13

TRACKING NUMBER	DOCUMENT NUMBER	DOCUMENT TITLE/DESCRIPTION	DOCUMENT AUTHOR	DOCUMENT DATE
U011A	EDF RWMC-844	Results of the SWEPP Certified Waste Sampling Program for FY-94 (Draft). (EDF RWMC-844)	D.W. Parker	1996
U012A	N/A	Waste Processing Requests	N/A	1983-1984
U013A	UNC-AL-TR-24-01.	Rocky Flats Plant Computer Simulation. User Requirements for Aqueous Recovery Operations Building 771. (UNC-AL-TR-24-01.)	UNC Analytical Services Albuquerque Operations	1989
U014A	N/A	Information and Brief History of Waste Content Codes Associated with the Rocky Flats Plant (with supporting documentation).	Don Kudera	03/01/1995
U015A	RWMC-675	Results of the SWEPP Certified Waste Sampling Program for FY 1992 and FY 1993 (RWMC-675)	S.M. Hailey	1993
U016A	WIPP-0217-RPTS-0192	Quantification of Radionuclides. (WIPP-0217-RPTS-0192)	N/A	1988
U017A	N/A	J.K. Paynter personal log book excerpt	J.K. Paynter	7/7/1987
U018A	N/A	J.K. Paynter personal log book excerpt	J.K. Paynter	2/8/1989
U019A	N/A	J.K. Paynter personal log book excerpt	J.K. Paynter	8/28/1987
U020A	Lab Report No. AL586.0679.	Analytical Report for Filter Plenum Samples. (Lab Report No. AL586.0679.)	N/A	9/9/1986
U021A	N/A	History of RFP IDC Certification	EG&G Rocky Flats, Inc.	NOT DATED
U022A	89-RF-0713	Analytical reports, waste profile statements and external letter to Dale Wells (EG&G Idaho, Inc.): Additions to Rocky Flats Transuranic Waste Profiles (89-RF-0713)	J.K. Paynter	2/27/1989
U023A	89-RF-1245	Waste profile statement sheets and external letter to Dale Wells, EG&G Idaho, Inc. "Additions to Rocky Flats Transuranic Waste Profiles." (89-RF-1245)	J.K. Paynter, Fax # WIPP-0129-RPTS-0192	4/6/1989
U024A	WIPP-0177-RPTS-0192	RTR Weight Estimations data and internal correspondence from K.S. Kosco to Jerry O'Leary. "Waste Calculations for Bin-Scale Test." (WIPP-0177-RPTS-0192)	K.S. Kosco	5/10/1991
U025A	4-A73-POPM-774-WO-2005.	Rocky Flats Environmental Technology Site Miscellaneous Aqueous Waste Handling and Solidification (Draft). (4-A73-POPM-774-WO-2005.)	Rocky Flats Remediation Services.	2/20/1996

Implementing Document: MP-TRUW-8.13

TRACKING NUMBER	DOCUMENT NUMBER	DOCUMENT TITLE/DESCRIPTION	DOCUMENT AUTHOR	DOCUMENT DATE
U026A	N/A	"Rocky Flats Plant TRU Waste Thermal Power Characterization Incremented in 0.05 Watt Segments from 0.05 Watts through > 0.60 Watts." September 1985 through February 1990. Data table produced from SWIMS Database.	N/A	NOT DATED
U027A	WIPP-0132-RPTS-0192	"Rocky Flats Plant TRU Certified Containers." September,1985-August,1989. Data table from the SWIMS Database. (WIPP-0132-RPTS-0192)	N/A	7/20/1994
U028A	N/A	"X-Ray Radiography Station Data" and "WIPP Container Certification Document." Raw data. April 13 and 14,1993	N/A	4/13/1993
U029A	N/A	Volatiles Report 374 and 774 sludge	N/A	10/23/1988
U030A	N/A	VOC Gas Chromatography/Mass Spectrometry Results. WIPP Experimental Waste Characterization Program data printout. Data query March 27, 1996	N/A	3/27/1996
U031A	N/A	Rocky Flats Radioactive Waste Flow Diagram	N/A	10/00/1985
U032A	Report RWS09	WSRIC Waste Streams sorted by IDC. (Report RWS09)	N/A	9/1/1992
U033A	N/A	Building 774 First Stage Treatment Log Book.	N/A	1969
U034A	N/A	Building 774 First Stage Treatment Log Book.	N/A	1989
U035A	N/A	Building 774 First Stage Treatment Log Book.	N/A	1982
U036A	N/A	Building 774 Water Results Log Book.	N/A	1980-1983
U037A	N/A	Building 774 Second Stage Treatment Log Book.	N/A	1981
U038A	N/A	Building 774 First Stage Treatment Log Book.	N/A	1984
U039A	N/A	Building 774 First Stage Flocculator Samples Log Book.	N/A	1968-1970
U040A	N/A	Building 774 Low Level Organic and TRU-Waste Organic Waste Log Book.	N/A	1976-1990

Implementing Document: MP-TRUW-8.13

TRACKING NUMBER	DOCUMENT NUMBER	DOCUMENT TITLE/DESCRIPTION	DOCUMENT AUTHOR	DOCUMENT DATE
U041A	N/A	Building 774 Car Log Book.	N/A	1982
U042A	N/A	Building 774 Record Book.	N/A	1985
U043A	N/A	Building 774 Setup Logbook.	N/A	1973-1990
U044A	N/A	Building 774 Water Results Log Book.	N/A	1984-1995
U045A	N/A	Monthly Report – Liquid Waste Operations	N/A	1981–1991
U046A	N/A	Evaluation of the EPA Code D001, Ignitability; D002, Corrosivity; and D003, Reactivity; Designations for RFP IDCs that are Stored at the INEL.	D. Kudera.	2/29/1996
U047A	N/A	A History of the Rocky Flats Plutonium/Actinide Recovery Plant 1952 to 1991 (Draft 10/30/91).	L.R. Crisler	1991
U048A	N/A	Building 374 Log Book for Time Period 12/24/86 to 12/29/88.	N/A	1988
U049A	N/A	Building 374 Log Book for Time Period 12/26/82 to 12/24/85	N/A	1985
U050A	N/A	Building 374 Log Book for Time Period 04/12/91 to 09/27/93.	N/A	1993
U051A	N/A	Building 371 Log Book for Time Period 04/07/82 to 12/29/85.	N/A	1985
U052A	N/A	Graphite Waste – Rocky Flats Environmental Technology Site	N/A	NOT DATED
U053A	N/A	Building 374 Solidified Sludge, Rocky Flats Environmental Technology Site	N/A	NOT DATED
U054A	TD94-018	Toxicity Characteristic Leaching Procedure Test Results of Cemented Surrogate Analytical Laboratory Solution Waste – Part 2 (TD94-018)	J. A. Phillips, G. B. Semones, T. R. Hergert, D. M. Saiki, and T. J. Satkowski	8/4/1994
U055A	N/A	Sorting of Radioactive Waste at Rocky Flats.	N/A	2/11/1970
U056A	N/A	Rocky Flats History of Filter Changes and Plenum Modifications	N/A	9/1/1975
U057A	N/A	Building 881, Presentation by Ernie English.	N/A	7/3/1996
U059A	N/A	Drum Prefix Numbers and Corresponding Material Balance Areas	N/A	1991, 1994

Implementing Document: MP-TRUW-8.13

TRACKING NUMBER	DOCUMENT NUMBER	DOCUMENT TITLE/DESCRIPTION	DOCUMENT AUTHOR	DOCUMENT DATE
U060A	EDF-RWMC-803	Chemical Constituents in Transuranic Storage Area (TSA) Waste. This document has been changed to Source Document Tracking Number P756A. (EDF-RWMC-803)	C. K. Abbott	2002
U061A	1-100000-EQA	Sampling and Analysis Plan for Pyrochemical Salts (1-100000-EQA)	N/A	09/31/92
U062A	N/A	Presence of Chromium Pyrochemical Salt Residues at Rocky Flats Plant	Jack L Long (KMI Services) and Mike A. Rivera (LAMB Associates)	1993
U063A	N/A	Laboratory Analysis Results for Electrorefining Salt	J. K. Fraser	12/17/1987
U064A	N/A	Radioactive materials associated with Rocky Flats	N/A	4/4/1977
U065A	N/A	Radioactive materials associated with Rocky Flats.	N/A	3/1/1983
U066A	J003499	Radionuclide Quantities Received and Dispatched from RFP from 1941 to Present. (J003499)	N/A	NOT DATED
U067A	N/A	881-CSL Physical Inventory of Radionuclides	N/A	N/A
U068A	N/A	Analytical data from the Liquid Stabilization Database at Rocky Flats.	N/A	3/3/1997
U069A	N/A	Drum Prefix Issue Dates Log Book.	N/A	1987-1997
U070A	N/A	Handbook of the Rocky Flats Plan Production Non-Destructive Assay Systems	N/A	6/1/1984
U071A	N/A	Material Balance for Size Reduction Vault	N/A	1984-1985
U072A	N/A	Waste Stream and Residue Identification and Characterization of Building 371.	N/A	9/1/1990
U073A	N/A	Waste Stream and Residue Identification and Characterization Building 559. Volume 1.	N/A	9/1/1990
U074A	N/A	Waste Stream and Residue Identification and Characterization Building 707 Volume 1	N/A	9/1/1990
U075A	N/A	Waste Stream and Residue Identification and Characterization Building 771, Volume 1	N/A	8/1/1990
U076A	N/A	Waste Stream and Residue Identification and Characterization Building 774	N/A	8/1/1990
U077A	N/A	Waste Stream and Residue Identification and Characterization Building 776	N/A	8/1/1990

Implementing Document: MP-TRUW-8.13

TRACKING NUMBER	DOCUMENT NUMBER	DOCUMENT TITLE/DESCRIPTION	DOCUMENT AUTHOR	DOCUMENT DATE
U078A	N/A	Waste Stream and Residue Identification and Characterization Building 777	N/A	8/1/1990
U079A	N/A	Waste Stream and Residue Identification and Characterization Building 779	N/A	8/1/1990
U080A	N/A	Waste Stream and Residue Identification and Characterization Building 886	N/A	8/1/1990
U081A	N/A	Nuclear Material Transaction Report. Transfer Series: ARF-VAB-000197	N/A	1985-1988
U082A	1-10000-RQ	EG&G Rocky Flats Plant Radionuclide and Hazardous Consistuent Reportable Quantity Determination Guide (1-10000-RQ)	N/A	12/15/1992
U083A	N/A	Internal Memorandum from J.T. Gilmartin to J.K. Wrapp, Kaiser-Hill, "Redesignation of Item Description Code (IDC 393)" with unpublished document "Analysis of IDC 393 for the RCRA Designation D007 Based on Process and Storage Conditions Necessary for Formation and Continued Existence of Hexavalent Chromium (CR)".	J.T. Gilmartin	8/6/1997
U084A	N/A	Waste Stream and Residue Identification and Characterization Building 778.	N/A	1/1/1991
U085A	N/A	Analytical Data and Summary of Samples from IDC 310 and 312.	N/A	1/22/1998
U086A	KJP/108/0198	Analytical Data for IDC 411. Includes external correspondence "Assessment of RCRA Metal Contaminating Plutonium" from Kevin Peters to Pan Edrich, RMRS Waste Systems. (KJP/108/0198)	Kevin Peters	1/29/1998
U087A	KJP/003/0298	Discrepancy Report from Kevin J. Peters to Shiela Hailey, LMITCO "Graphite Waste". (KJP/003/0298)	Kevin J. Peters	2/3/1998
U088A	KJP/114/0298	Discrepancy Report: Evaluation of Potential Sources of RCRA Compounds Found in Graphite Waste Headspace (KJP/114/0298)	Kevin Peters	2/25/1998
U089A	KPJ/004/0398	Discrepancy Report from Kevin J. Peters to Sheila Hailey, LMITCO,"Assessment of Graphite Waste Matrix and Solvent Usage". (KPJ/004/0398)	Kevin J. Peters	3/4/1998
U090A	ADR-081-98	Letter from Alan D. Rodgers to Tom Clements, "Characterization of Graphite Waste." (ADR-081-98)	Alan D. Rodgers	7/6/1998
U091A	N/A	Process Flow Diagrams for IDC 480, Rocky Flats Plant - Waste Stream and Residue Identification and Characterization	N/A	N/A
U092A	N/A	Inventory values as generated by TRIPS Change Request (TCR) 1821.	N/A	5/22/2001
U093A	N/A	Backlog Waste Rationale for Description Codes 001 and 800.	NA	NOT DATED

Implementing Document: MP-TRUW-8.13

TRACKING NUMBER	DOCUMENT NUMBER	DOCUMENT TITLE/DESCRIPTION	DOCUMENT AUTHOR	DOCUMENT DATE
U094A	N/A	Ledger of Acceptable Knowledge (AK) Source Documents.	N/A	03/24/2003
U095A	N/A	Radiochemistry Data Packages by Waste Form and Site Project Office (SPO) File Location	N/A	4/8/2002
U096A	N/A	EDF 1242 Supporting Documentation. Compiled by Cecilia Hoffman. Held at DOE-ID as "Possibly UCNI."	Cecilia R. Hoffman	10/11/2001
U097A	N/A	White Paper Response to Inquiry Relating Directly to EDF-RWMC-942 Information and Additional Questions Associated with the EDF.	Kenneth L. Gilbert, Ph.D Timothy E. Venneman, M.S.	11/1/2001
U098A	N/A	Preliminary data for the IDC 003 waste stream.	N/A	10/1/2001
U099A	INW164.001	Draft Waste Stream Profile Form INW164.001-Solidified Organics and Supporting Documentation (INW164.001)	N/A	4/10/2002
U100A	EDF-2710	Radiography and Visual Examination Results of the Stored Waste Examination Pilot Plant (SWEPP) Certified Waste Sampling Program for Fiscal Years 1997, 1998, 1999, and 2000. (EDF-2710)	N/A	06/21/2001
U101A	N/A	Visual Data Packages for Miscertifications Due to Excess Liquids	N/A	10/21/1996
U102A	N/A	Acceptable Knowledge (AK) Final Evaluation Checklist INW161.001-Fire Brick/Coarse Fire Brick.	N/A	9/18/2002
U103A	N/A	Acceptable Knowledge (AK) Final Evaluation Checklist INW252.001-Leaded Rubber Gloves and Aprons.	N/A	10/25/2002
U104A	N/A	Acceptable Knowledge (AK) Final Evaluation Checklist IN216.002-First and Second Stage Sludge Subpopulation.	N/A	10/25/2002
U105A	N/A	Apparent Cause Report for CAR-02-078: Solidified Waste Residual Liquid De -watering Investigation Not Referenced in Acceptable Knowledge Document.	N/A	9/3/2002
U106A	CNN 35661	Delegation of Site Project Manager Responsibility for Assessment of Flammability for Containers-3100 m3 Project. (CNN 35661)	Tom Monk	9/11/2002
U107A	N/A	Characterization of Rocky Flats Plant Special Setups Sludge Waste (IDCs 004, 802)	N/A	2002
U108A	N/A	RTR/VE Comparison Database for 1983 to 1994.	N/A	N/A
U109A	N/A	Buildings JN-1, JN-2, and JN-3 Summaries.	Unknown	UNKNOWN

Implementing Document: MP-TRUW-8.13

TRACKING NUMBER	DOCUMENT NUMBER	DOCUMENT TITLE/DESCRIPTION	DOCUMENT AUTHOR	DOCUMENT DATE
U110A	N/A	Miscellaneous Documentation describing Radioanalytical Laboratory Operations.	N/A	1997-1998
U111A	N/A	TCLP metals data for leaded glass.	Rocky Flats Environmental Technology Site.	7/1/1998
U112A	N/A	Removal of Special Nuclear Materials From The Plutonium Laboratory.	R. E. Snider.	12/6/1978
U113A	N/A	Real-Time Radiography Data for 11 containers of Battelle-Columbus Waste	V.J. Technologies and Battelle Columbus Laboratories.	11/3/2000
U114A	N/A	Battelle-Columbus AK Source Document Reference Number Log.	N/A	4/1/2003
U115A	N/A	SDVO RCRA Tracking Database (CD-R)	N/A	2/1/2003
U116A	N/A	MTD-Drum Experiment System (CD-R)	N/A	2/1/2003
U117A	N/A	Crosswalk - AMWTP and BC assigned AK Source Document Numbers for Battelle Columbus Source Documents in AMWTP AK Inventory	N/A	4/1/2003
U118A	N/A	Fissile Distribution by Content Code - Query data November 8, 1995.	N/A	N/A
U119A	RWMC-EDF-761	(Draft) Rocky Flats Plant Characterization (1954-1980) (RWMC-EDF-761)	T. L. Clements, Jr. and G. Ross Darnell	7/18/1994
U120A	INEL-96/0308	Inventory Analysis of Stored Transuranic (TRU) Waste at the Radioactive Waste Management Complex (RWMC). (INEL-96/0308)	K. M. Croft and V. S. Scown.	11/00/1996
U121A	N/A	Cross-walk- AMWTP and INEEL assigned AK Source Document Numbers for INEEL 3,100m3 Project Documents in AMWTP AK Inventory.	N/A	5/1/2003
U122A	N/A	Container Inventory Report for WMF-629 through WMF-633 (TRIPS report)	Richard NeSmith	12/24/2002
U123A	N/A	AK Document Reference Inventory. AMWTP Form-1084.	N/A	10/16/2012
U124A	N/A	Argonne-West Visual Examination Records for the Seven Experimental Test Bins.	N/A	VARIOUS
U125A	N/A	Waste Retrieval Project Databases. Two electronic files reportedly created circa 10/1994	N/A	10/11/1994
U126A	N/A	U. S. Department of Energy Mound Laboratory, Acceptable Knowledge for Transuranic Waste Shipped to Idaho National Engineering and Environmental Laboratory.	Bill Franz, Mound	NOT DATED

Implementing Document: MP-TRUW-8.13

TRACKING NUMBER	DOCUMENT NUMBER	DOCUMENT TITLE/DESCRIPTION	DOCUMENT AUTHOR	DOCUMENT DATE
U127A	N/A	Data from the Transuranic Waste Management Information System (TWMIS).	N/A	UNKNOWN
U128A	N/A	Prefix Timeline for Rocky Flats Processes	WASTREN	2003
U129A	N/A	Defense Determination for AMWTP Waste	Ron Reeves	5/25/2005
U130A	N/A	Defense Waste Cyclone Incinerator Demonstration Program Summary.	N/A	NOT DATED
U131A	N/A	Pelletized Waste Form Demonstration Program Summary	N/A	NOT DATED
U132A	N/A	Mound Laboratory Radioactive Waste Process Flow Sheets	N/A	05/31/1977
U133A	N/A	Mound Map – Waste Management Facilities	N/A	2/26/1966
U134A	U134A	US DOE Hazardous Chemical Defense Waste Management Program Albuquerque Operations Mound Facility, Preliminary Data Base (U134A)	N/A	1/1/1983
U135A	N/A	Applicability of the Term "Byproduct Material" for Purposes of RCRA, to Waste Produced by Department of Energy Facilities	N/A	NOT DATED
U136A	N/A	Estimate of the Effect of Capture Gamma Rays on Glove Box Surface Doses for HEDL LGRA Study, , February 25, 1983	A. Shapiro	2/25/1983
U137A	N/A	Criticality Evaluation of Low Gamma Receiving Area	A. Shapiro	NOT DATED
U138A	N/A	Shielding Study for LGRA and Calorimetry Laboratory	R.E. Wiencke	10/12/1982
U139A	N/A	Radioactive Waste Shipment	P.E. Figgins	8/10/1983
U140A	N/A	Resinex 60 Dust Control Agent	N/A	NOT DATED
U141A	N/A	Type I, Type II, Type III, and Type V TRU Waste Packages	N/A	N/A
U142A	N/A	Mixed Hazardous Waste Streams Generated at AL - Mound	N/A	11/1/2001
U143A	N/A	Authorization to Ship SS or Non-SS Material	D,A. Wiederecht	7/2/1979
U144A	N/A	Analysis of Hydraulic Oil for PCBs and other Major Chromatographable Species	Signature Illegible	12/11/1981
U145A	N/A	Nuclear Waste Program, Mound Laboratory	Monsanto Research Corporation	NOT DATED

Implementing Document: MP-TRUW-8.13

TRACKING NUMBER	DOCUMENT NUMBER	DOCUMENT TITLE/DESCRIPTION	DOCUMENT AUTHOR	DOCUMENT DATE
U146A	N/A	Radioactive Waste Shipped from May,1980 - December 1986	N/A	12/1/1986
U147A	N/A	Storage Criteria for Unirradiated Enriched Uranium	N/A	6/9/1972
U148A	N/A	Year-End Status Report on Shipments of Radioactive Material	Multiple Authors	1/9/1973
U149A	N/A	WD Monthly Reports for December 1978 thru November 1981	N/A	11/1/1981
U150A	N/A	Acid and Caustic Inventory	N/A	1979
U151A	N/A	Mound Facility's Decontamination and Decommissioning Experience. April 15 -16, 1980	N/A	4/16/1980
U152A	N/A	TRU Package Thermal Evaluations	J. F. Griffin	3/7/1979
U153A	N/A	Nuclear Criticality Procedures for T Building Room 245	N/A	9/26/1977
U154A	N/A	Procedures for preparation of mixed oxide materials for the confirmatory assessment experiments.	N/A	9/13/1977
U155A	N/A	Summary of Informal Criticality Audit	R. K. Blauvelt	5/25/1977
U156A	N/A	Criticality Control Procedures for R-143	N/A	05/17/1971
U157A	N/A	Criticality Procedures for the PP Analytical Group	N/A	NOT DATED
U158A	NA	Summary of Informal Criticality Audit (NA)	Richard K. Blauvelt	6/28/1976
U159A	N/A	TRU Solid Waste Questionnaire	D. A. Edling	7/23/1978
U160A	N/A	Criticality Committee Minutes	N/A	4/11/1980
U161A	N/A	Operating Procedures for T-1W Vault	N/A	3/12/1980
U162A	N/A	Criticality Committee Meeting Minutes	N/A	11/9/1973
U163A	N/A	Guidelines for Operating Procedures for Cage 8	N/A	N/A
U164A	N/A	Product Bulletins for Nutek Cleaning Products	N/A	N/A
U165A	N/A	Box Core Sample Results of Contaminated Soil from WD Hillside	N/A	N/A
U166A	N/A	Container Shipment Reports	N/A	N/A
U167A	N/A	TRU Waste Certification Task - Inline Liquid Waste Description	N/A	N/A
U168A	N/A	F-Line Refractory Encapsulation	Louis Rodriguez	7/10/1973

Implementing Document: MP-TRUW-8.13

TRACKING NUMBER	DOCUMENT NUMBER	DOCUMENT TITLE/DESCRIPTION	DOCUMENT AUTHOR	DOCUMENT DATE
U169A	N/A	Operating Procedures for SM-37 Vault	N/A	10/01/1980
U170A	N/A	Criticality Safety Committe Report	R. R. Walston	10/01/1978
U171A	N/A	Criticality Evaluation of Radioactive Waste Incinerator Operation	N/A	3/3/1978
U172A	N/A	Appendix I - Criticality and Storage Procedures for Fissionable Material in T Building Calorimeters	N/A	N/A
U173A	N/A	Memo to R. A. Wolfe, No title	Paul E. Figgins	1/14/1969
U174A	N/A	INEL Transuranic Storage Cell Retrieval	Unknown	UNKNOWN
U175A	N/A	Visual Batch Summary Report for Drum #022580 (IDRF002301478), Batch WCV-022580 Revision 1.	N/A	3/13/2002
U176A	N/A	Visual Batch Summary Report for Drum #011625 (IDRF002301478), Batch WCV-011625, Revision 0	N/A	9/30/2002
U177A	N/A	Hydrogen diffusivity test data for the BNFLSS filters tested between October 7, 2003 and August 11, 2005	N/A	N/A
U178A	N/A	Hydrogen diffusivity test data for the BNFLLS filters tested between January 29, 2004 and June 25, 2004.	N/A	N/A
U179A	N/A	Hydrogen diffusivity test data for the BNFLSM filters tested between January 29, 2004 and August 24, 2004.	N/A	N/A
U180A	N/A	Hydrogen diffusivity test data for the BNFLLM filters tested between January 29, 2004 and February 16, 2005.	N/A	N/A
U181A	N/A	Hydrogen diffusivity test data for the BNFLSP filters tested between December 19, 2003 and September 10, 2004.	N/A	N/A
U182A	N/A	Hydrogen diffusivity test data for the BNFLLP filters tested between January 29, 2004 and September 22, 2004.	N/A	N/A
U183A	n/a	E-Mail from J. Biedscheid to Cathy, titled "TRUPACT-II Shipment of Mound Pu-239 Material" (n/a)	J. Biedscheid	7/26/2000
U184A	N/A	Summary Report on Mound Boxes, e-mail to Clint Kelly from Murthy Devarakonda, dated March 31, 2000.	Murthy Devarakonda	3/31/2000
U185A	N/A	Fax to G. Siry from W. Franz regarding Mound Facility Background Volume STP FY-00	N/A	2/28/2001

Implementing Document: MP-TRUW-8.13

TRACKING NUMBER	DOCUMENT NUMBER	DOCUMENT TITLE/DESCRIPTION	DOCUMENT AUTHOR	DOCUMENT DATE
U186A	N/A	Mound Laboratory - Classified Document Summary, ADC Unclassified, 4/1/03. Defense Processes at Mound	J. Rovansek	4/1/2003
U187A	N/A	List of Sources of TRU Waste from Mail Hill Tritium Project	Unknown	UNKNOWN
U188A	N/A	Process Knowledge for Old SD Project	D. Adkins	11/20/1997
U189A	N/A	E-mail to COLVRL from E. Howell, titled "Contaminated Precious Metals"	E. Howell	11/6/1997
U190A	DOE/CAO-95-1121	Portion of the Waste Baseline Inventory Report for 1995 (DOE/CAO-95-1121)	N/A	12/1/1995
U191A	N/A	Waste Examination Log for RTR Tapes, not dated, author unknown	N/A	N/A
U192A	N/A	Drum Container Tables, 3/30/2000	N/A	3/30/2000
U193A	N/A	TRAMPAC Requirements Matrix by Drum	N/A	N/A
U194A	N/A	Mound Compliance with TRUPACT-II Authorized Contents	N/A	4/1/2000
U195A	N/A	Spreadsheets of Waste	N/A	N/A
U196A	N/A	TRU Waste Certification Task: Sludge From the Waste Disposal Plant	Unknown	UNKNOWN
U197A	N/A	Regulatory Requirements Associated with Transfer of Mound's Transuranic Waste To Another DOE Site	Unknown	UNKNOWN
U198A	N/A	Mound Transuranic Waste Feasibility Study	L. Lyons	7/8/1998
U199A	N/A	Verification Methods Matrix, 3/6/95.	Central Characterization Project	03/06/1995
U200A	N/A	Mound Site TRU Waste Data: Preliminary TRUPACT-II Transportation Compliance Evaluation	N/A	N/A
U201A	N/A	Container Approval Requests and Deviations for Shipment	G. Siry	11/12/2002
U202A	N/A	Tables of TRU Waste Packages	Unknown	UNKNOWN
U203A	N/A	Summary of Characterization Data	Benchmark Environmental Corp.	9/1/1999
U204A	N/A	Waste Category - TRU Boxes	N/A	N/A
U205A	N/A	Trash Categories, Content Codes, and Waste Categories	Unknown	UNKNOWN
U206A	N/A	List of Chemicals and Materials in TRU Waste Content Codes, Revision 2, 6/89.	Author Unknown	06/01/1989

Implementing Document: MP-TRUW-8.13

TRACKING NUMBER	DOCUMENT NUMBER	DOCUMENT TITLE/DESCRIPTION	DOCUMENT AUTHOR	DOCUMENT DATE
U207A	N/A	List of Drums	N/A	5/24/1981
U208A	N/A	Excerpt from Draft Report Describing Waste Streams Generated at Mound	N/A	N/A
U209A	N/A	Notes from Interviews and Document Reviews. Interviews include Rob Robinson, Gary Morris, and Ron Sohn, February 19, 2003. Documents Identified Included Miscellaneous Correspondence, September, 1964, and Draft Report, WCB 2.	N/A	2/19/2003
U210A	Form-1066	TRU Waste Management AK Checklist, Advanced Mixed Waste Treatment Faciltiy, Rev. 0, May 10, 2005, Rev. 1, August 10, 2006, Rev. 2, August 13, 2007, and Rev. 3, August 11, 2010. (Form-1066)	AMWTP	10/04/2011
U211A	Form-1066	TRU Waste Management AK Checklist, Battelle Columbus Laboratories (Form-1066)	M. L. Johnson	8/10/2006
U212A	Form-1066	Form-1066, TRU Waste Management AK Checklist, Bettis Atomic Power Laboratory, Rev. 0, August 10, 2006 (Form-1066)	M. L. Johnson	8/10/2006
U213A	Form-1066	Form-1066, TRU Waste Management Ak Checklist, Mound Laboratory (Form -1066)	M. L. Johnson	08/21/2008
U214A	Form-1066	Form 1066, TRUW Waste Management AK Checklist, Rocky Flats Plant, Rev. 0, August 11, 2003; Rev. 1a, March 1, 2004; Rev. 1b, March 9, 2004; Rev. 2, October 9, 2005; Rev. 3 October 13, 2005; Rev. 4 (with BN243) March 13, 2006; Rev. 5 (with BN252) March 13, 2006; Rev. 6 (with BN161) March 13, 2006; Rev. 7 (with BN004) March 30, 2006; Rev. 8 July 25, 2006; Rev. 9 August 13, 2007; Rev. 10, September 2, 2008; Rev. 11, August 11, 2010. (Form-1066)	AMWTP	10/04/2011
U215A	N/A	Excel Spreadsheets of Container Information from 1970, 1971 and 1972 RF Load Lists	Randall C. Morris	3/24/2009
U216S	N/A	Briefing Booklet for the National TRU Executive Committee, The Definition of Defense TRU Wastes Policy Recommendations.	N/A	1995
U217S	N/A	Casting Lab Sodium Loading Benchtop Procedure - Excerpt only	MFC	UNK
U218A	89-RF-1625	Waste statement sheets and external letter to Dale Wells, EG&G Idaho, Inc. Revisions to Rocky flats Transuranic Waste Profiles. (89-RF-1625)	J. K. Paynter, Fax WIPP-0129 -RPTS-0192	5/5/1989

Implementing Document: MP-TRUW-8.13

TRACKING NUMBER	DOCUMENT NUMBER	DOCUMENT TITLE/DESCRIPTION	DOCUMENT AUTHOR	DOCUMENT DATE
U219S	N/A	Dimensions and volumes for Vollrath cans (e.g., 8801 and 8802) used to package RF waste.	N/A	N/A
U220S	N/A	Packaging Material Weights (Table 1.1, Waste Packaging Components and Weights)	R. E. Giebel, R.G. Leebl, J.A. Battaglino	11/12/1971
U223A	N/A	Rocky Flats Plant Load Lists to INEEL CY 1970	N/A	N/A
U224A	N/A	Rocky Flats Plant Load Lists to INEEL CY 1971	N/A	1971
U225A	n/a	Rocky Flats Plant Load Lists to INEEL CY 1972 (n/a)	n/a	1972
U226A	N/A	RWMIS Data for 1973 - 74	Received from Kirk Green	03/11/2009
U227S	3522T	IWTS Material and Waste Characterization Profile 3522T: AW162CH: ANL-W FMF EFL ZR-U-PU Fuel Casting Alloys Residues, STP: ID-ANL-162T (3522T)	IWTS	2/1/1989
U228S	3523T	IWTS Material and Waste Characterization Profile #3523t: AW163CH: ANL-W ACL cold Line Absorbed Liquid, Misc., Hardware and Poly, STP: ID-ANL-163T (3523T)	IWTS	9/14/1988
U229S	3581T	IWTS Material and Waste Characterization Profile #3581T: ANL-W ALC Glassware, Paper, Poly , and Miscellaneous Hardware IDC-161, STP: ID-ANL-161. (3581T)	IWTS	5/13/1991
U230A	N/A	Rocky Flats Plant Item Description Codes List	n/a	9/1/1977
U231A	RF-U065	Versatile Search Report - INEEL (RF-U065)	N/A	2/21/2001
U232A	N/A	RWMIS Waste Disposal Report	Received from Kirk Green	01/05/2010
U235S	N/A	RWMIS Waste Disposal Report 1970 through 1971	INL	03/11/2009
U236S	3521T	IWTS Material Profile: Laboratory Waste, IDC-150, 3-19-81. INACTIVE (3521T)	MFC	4/14/2010
U237S	3531T	IWTS Material Profile 3531T: Laboratory Mixed Lead Waste IDC 150, 11/22/02 (3531T)	MFC	4/14/2010
U238S	n/a	Revised Crosswalk of CCP versus AMWTP AK information "Element" Assignments (n/a)	M. L. Johnson	01/20/2010

Implementing Document: MP-TRUW-8.13

TRACKING NUMBER	DOCUMENT NUMBER	DOCUMENT TITLE/DESCRIPTION	DOCUMENT AUTHOR	DOCUMENT DATE
U239S	N/A	Weapons of Mass Destruction (WMD) Web site: Idaho National Laboratory, Materials & Fuels Complex. www.globalsecurity.org/wmd/facility/idaho_inel-facility-mfc.htm	DOE/ID	5/6/20010
U242A	N/A	Containers Certified by 3100 cubic meter Project and Shipped by BNFL	AMWTP	N/A
U243A	n/a	Excerpt from Tank Waste Information Network System Best Basis Inventory (n/a)	M.H. Conilogue	10/04/2006
U244A	PNNL-230-0001-01, PNNL-230-0001-02	Profile Checklist: Profile Number: PNNL-230-0001-01 (PNNL-230-0001-01, PNNL-230-0001-02)	Waste Services Organization	02/02/2004
U245A	RMIS Sccession # N1D0029918	Email From: R.J. Swan To: M.I. Rollosson Subject: This is it I think. 231-Z FACILITY EXTERIOR (RMIS Sccession # N1D0029918)	n/a	01/09/2007
U246A	ARH-1405 RD	D5 Plutonium and Neptunium Accountability Data (ARH-1405 RD)	J.D. Anderson	10/07/1969
U247A	n/a	231-Z Solid Waste Burial Records (n/a)	PNL/RHO	1972-1978
U248A	n/a	Shipping Records from Rockwell Hanford Operations, D&D - Addendum for 218-W-3A (n/a)	Rockwell Hanford	07/23/1980
U249A	14-1D-8LM-0401	Radioative Waste Storage/Disposal Analysis Record (14-1D-8LM-0401)	M.F. Pascual	09/16/1995
U250A	n/a	Addendum to TSD Record (SS&C) (n/a)	Joell Stamm	VARIOUS
U251A	n/a	Review of PFP Complex Effluents AK/Designation and Applicability of WAC 173-303-090(7) and 40 CFR 261.23 (n/a)	J.P. Evans	04/03/2008
U252A	n/a	Shipping Records: Solid Waste Burial Records for 231-Z to 218-W-4C (n/a)	Pacific Northwest Laboratory (PNL)/Rockwell Hanford Operations (RHO)	1978-1983
U253A	n/a	Shell Chemical Company-Solvents Technical Support-American Region-Fax On Demand System (n/a)	Shell Chemical Company	09/22/2000
U254A	PNL 186035	Transuranic Waste Storage Record for PIN # PNL 186035 (PNL 186035)	R.L. McDowell	VARIOUS
U255A	231Z-DES-05-01	231-Z TRU Debris Waste Stream Designation for 231-Z-DES-05-01 (231Z-DES-05-01)	M. Lakes	04/04/2007
U256A	Site Code: 231-Z	Waste Information Data System General Summary Report for 232-Z Waste Incineration Facility (Site Code: 231-Z)	N/A	03/14/2007
U257A	n/a	NDA Data for Containers from Hanford Waste Stream RLMPDT.001 (n/a)	WWIS	N/A

Implementing Document: MP-TRUW-8.13

TRACKING NUMBER	DOCUMENT NUMBER	DOCUMENT TITLE/DESCRIPTION	DOCUMENT AUTHOR	DOCUMENT DATE
U258A	n/a	Current Volume Inventory for Hanford Waste Streams (n/a)	n/a	N/A
U259A	n/a	NDE BDR Data (n/a)	n/a	2008
U260A	n/a	NDA BDR Data (n/a)	n/a	N/A
U261A	n/a	Waste Container Projected Procurements for the Lifecycle of the PFP D&D Project (n/a)	n/a	2009
U262A	n/a	231Z INL Over-Pack Drum Data Sheets - PK shipment (n/a)	n/a	07/26/1977
U263A	n/a	RMIS Retrievals-Solid Waste Disposal Requests and Associated Waste Information (n/a)	Various PNNL personnel	NONE
U264A	n/a	Solid Waste Information Tracking System (SWITS)- Container Assay Data Dump for the Building 325 Radiochemistry Laboratory (n/a)	n/a	1986-2003
U265A	PNNL-325	Plutonium Oxide Characterization for MOX (PNNL-325)	C. Delegard	N/A
U266A	REPORT-111111	Waste Certification Summary (REPORT-111111)	n/a	N/A
U267A	n/a	Historic Property Inventory Form (n/a)	P.K. Houf, M.S. Gerber	05/01/1998
U272A	n/a	PFP INL Over Pack drum data sheets - PK shipment (n/a)	n/a	n/a
U273A	n/a	325 INL Over pack drum data sheets - PK shipment (n/a)	n/a	n/a
U274A	RPT-TRUW-49	Acceptable Knowledge Summary for Resin Debris Waste (BN317) (RPT-TRUW-49)	AMWTP	11/23/2005
U275A	0	RLM231ZD Container List (0)	M. I. Rollosson	12/01/2006
U276A	RLM231ZD	231-Z Excel Spreadsheet and Radcalc 1 Isotopic Calculations, RLM231ZD (RLM231ZD)	J. D. Anderson	07/07/2007
U277A	N/A	Hanford Site Battery Book - "HEHF MSDS's from Soft Reporting which Pertain to Alkaline Batteries"	T. C. Hughes	N/A
U278A	PFP-DES-07-00	Waste Designation Worksheet for PFP-DES-07-00 (PFP-DES-07-00)	P. Wicks	06/21/2007
U279A	PFP-DES-08-00	Waste Designation Worksheet for PFP-DES-08-00 (PFP-DES-08-00)	P. Wicks	06/21/2007
U280A	216Z12DES01 to 04, 241Z8DES-01-00	PFP Complex Effluent TRU Waste Designation (216Z12DES01 to 04, 241Z8DES-01-00)	M. Watson	04/01/2007

Implementing Document: MP-TRUW-8.13

TRACKING NUMBER	DOCUMENT NUMBER	DOCUMENT TITLE/DESCRIPTION	DOCUMENT AUTHOR	DOCUMENT DATE
U281A	PFP-DES-03-00	Waste Designation Worksheet for Designation # PFP-DES-03-00 (PFP-DES-03-00)	P. Wicks	02/02/2007
U282A	N/A	Solid Waste Storage/Disposal Records	Plutonium Finishing Plant	N/A
U283A	PFP-DES-04-00	Waste Designation Worksheet for Designation # PFP-DES-04-00 (PFP-DES-04-00)	M. Lakes	02/05/2007
U284A	WMP-32150	Waste Designation Worksheet for Designation # PFP-DES-05-00 (WMP-32150)	P. H. Wicks	02/05/2007
U285A	N/A	Burial Records for PFP	N/A	03/14/1975
U286A	N/A	RMIS Solid Waste Record List for NPFPD and MPFPD	N/A	05/30/2001
U287A	RLMPFPCD	Burial Records for RLMPFPCD (RLMPFPCD)	M. Rollosson	06/18/2008
U288A	N/A	Low Level/TRU Waste Located at CWC	Serena Galstad	1984-1998
U289A	N/A	Addendum to TSD Record	N/A	12/13/2004
U290A	RLMPDT.001	Reevaluation of RLMPDT.001 Change Notice #3 (RLMPDT.001)	M. I. Rollosson	03/12/2007
U291A	N/A	Reevaluation MPFPD Organic matrix to Other Organic Matrix Material	M. I. Rollosson	2006-2007
U292A	N/A	Acceptable Knowledge Reevaluation Checklist	M. I. Rollosson	02/22/2007
U293A	# 014029	MSDS for Fryquel 220 Hydraulic Fluid (# 014029)	Supresta	04/24/2007
U294A	RLMPFPCD	Estimated Waste Material Parameters for the RLMPFPCD Waste Stream (RLMPFPCD)	N/A	09/16/2009
U295A	N/A	Barium Transport in Fluorescent Lamps	R. C. Garner	2000
U296S	MSDS 061824A,	MSDS for RadPro 0200 (MSDS 061824A,)	Environmental Alternatives, Inc.	02/10/2004
U297A	MSDS 27785	MSDSs - Talc and Mistron 500 (MSDS 27785)	Luzenac America, Inc.	10/07/1993
U298S	MSDS 065584	MSDS for Aspigel 100 (MSDS 065584)	N/A	04/04/2005
U299S	MSDS #061825	MSDS for RADPRO 0300 (MSDS #061825)	Environmental Alternatives, Inc.	02/10/2004
U300S	MSDS #061823A	MSDS for RADPRO 0100 (MSDS #061823A)	Environmental Alternatives, Inc.	03/20/2006

Implementing Document: MP-TRUW-8.13

TRACKING NUMBER	DOCUMENT NUMBER	DOCUMENT TITLE/DESCRIPTION	DOCUMENT AUTHOR	DOCUMENT DATE
U301A	HNF-EP-0918	Solid Waste Integrated Forecast Technical (SWIFT) Report, FY2008 - FY2035 (HNF-EP-0918)	R.A. Barcot	01/01/2008
U302A	N/A	MPFPD Isotopes Data From SWITS	R. Clinton	06/07/2001
U303A	N/A	Addendum to TSD Record (canned ash)	J. Stamm	N/A
U304A	N/A	Hanford Site Plutonium Finishing Plant Residues/Legacy Holdup	N/A	N/A
U305A	n/a	INL Analytical Waste with RFETS P and U-Listed Waste (n/a)	M. L. Johnson	02/20/2008
U306S	N/A	RWMIS Waste Disposal Report pages	RWMC	05/04/2011
U307S	N/A	WILD database download of non-RFO Disposals in Pit 1, Pit 2, Trench 1, Trench 5, Trench 7, Trench 9 and Trench 10.	WILD	04/07/2002
U308S	N/A	Hydrogenous Liquid in Cell Areas I, II and III	N/A	1987-2001
U309S	N/a	Cell Areas I and III Hydrogeneous Liquid Inventory (N/a)	N/A	1987-2004
U310A	NBL-SA-Pu(I)-1	Determination of the Isotopic Composition of Plutonium by Thermal Ionization Mass Spectometry (NBL-SA-Pu(I)-1)	New Brunswick Laboratory	NA
U311S	N/A	Excerpt from a report (Robinson Report) regarding the Isotopic Analysis of High Burnup Spent Nuclear Fuel.	ANL-E	unkown
U312S	N/A	Combustible Waste Contents	N/A	N/A
U313S	N/A	Decon & Repair Area Procedures for cleaning and repairing a manipulator (Waste operations work order dated Nov 15, 1984. AGHCF Decon Manipulator)	N/A	03/24/1987
U314S	N/A	Draft Proposal for: Alpha-Gamma Hot Cell Facility Waste Management Plan	ANL-E	unknown
U315S	N/A	Basis for Assessment of the Environmental Impact of the Expanded Program at Argonne-East	N/A	FY 1974
U317A	NBL-SA-PP-1	Determination Of Weight Loss of Plutonium Oxide on Heating (NBL-SA-PP-1)	New Brunswick Laboratory	N/A
U318A	NBL-SA-PP-2	Determination of Specific Gravity and Density of Plutonium Solutions (NBL-SA-PP-2)	New Brunswick Laboratory	N/A
U319A	NBL-SA-Pu(E)-1	Determination of plutonium by controlled-potential coulometry (NBL-SA-Pu(E)-1)	New Brunswick Laboratory	N/A

Implementing Document: MP-TRUW-8.13

TRACKING NUMBER	DOCUMENT NUMBER	DOCUMENT TITLE/DESCRIPTION	DOCUMENT AUTHOR	DOCUMENT DATE
U320S	WMHPM-0011	Radioactive Waste Management Manual (WMHPM-0011)	Waste Management Operations	unknown
U321A	n/a	WTS queries of prohibited items identified by RTR and VE examinations (n/a)	AMWTP WTS	06/30/2011
U322A		Burial of Radioactive Contaminated Waste on the Rocky Flats Plant Site ()	W. H. Lee	
U323S	BNFL-5232-RPT-TRUW-29	RPT-TRUW-29 Historical Fissle Gram Equivalent (FGE) Comparison Between The TRIPS Database and the AMWTP Waste Tracking System (WTS) (BNFL-5232-RPT-TRUW-29)	BNFL	11/04/2004
U325S	N/A	ANL-E TWMIS	AMWTP	12/07/2011
U326S	Pu-Fe(OH)3-LaF3-a	Separation of Plutonium by Ferric Hydroxide - Lanthanum Fluoride Precipitation (Pu-Fe(OH)3-LaF3-a)	MFC	01/01/1958
U327S	Pu-A	Plutonium by Lanthanum Fluoride (Pu-A)	MFC	N/A
U328S	ANL-CEN, U-Sum	A Summary of Uranium Analyses (ANL-CEN, U-Sum)	MFC	03/01/1963
U329S	N/A	AMWTP Waste Tracking System (WTS) Database information for INL Generators	Randall C. Morris	02/07/2012
U330S	ANL1505A	Integrated Waste Tracking System Container Profiles for ANL1505A, ANL1505B, and ANL1505C (ANL1505A)	N/A	07/22/2010
U331S	N/A	MD Assay Results 08-07-12	AMWTP	08/07/2012
U332S	N/A	Alloy Facility Removal and Burial	Frank Loudermilk, Jr.	07/01/1981
U333A	CCP-AK-INL-008	Central Characterization Project Acceptable Knowledge Summary Report for Idaho National Laboratory Materials and Fuels Complex Contact-Handled TRU Debris, Waste Stream ID-MFC-S5400, DRAFT E (CCP-AK-INL-008)	Scott Smith	
U334S	n	Form 1066 - BN (n)	AMWTP	10/10/2012
U335S	N/A	Form 1066 for the Mound facility	AMWTP	10/10/2012
U336S	U3002	WDS Query and Compilation of Radiological Data for Waste Streams AECHDM and AECHHM (U3002)	CCP	06/23/2010
U337A	N/A	MFC Rad Measurements	Randall C. Morris	11/20/2012

Implementing Document: MP-TRUW-8.13

TRACKING NUMBER	DOCUMENT NUMBER	DOCUMENT TITLE/DESCRIPTION	DOCUMENT AUTHOR	DOCUMENT DATE
U338S	N/A	Radiological properties worksheets	Tom Krause	09/29/2003
U339S	N/A	WDS Query and Compilation of Radiological Data for Waste Streams AECHDM and AECHHM	Chris Chancellor	05/05/2010
U340A	U340	Draft of an Environmental Assessment for Increased Post Irradiation Examination Capabilites at ANL-E (U340)	Unknown	1974
U342S	U3006	Radionuclide Data for Waste Streams ID-AECHDM and ID-AECHHM (U3006)	CCP	09/26/2011
U343S	U3001	CH TRU Project Inventory to be Repackaged (U3001)	Argonne/CCP	01/18/2010
U344S	U3003	Historic WMO-195 Waste Requisitions for containers repackaged into Waste Streams AECHDM-PK and AECHHM-PK (U3003)	ANL-E WMO/CCP	Various
U345S	U3004	Waste Streams AECHDM-PK and AECHHM-PK Waste Container Packaging Forms and Supporting Documentation (U3004)	ANL-E WMO/CCP	Various
U346S	U3005	WMS Query for Repackaged CH Waste Streams AECHDM-PK and AECHHM-PK (U3005)	ANL-E WMO/CCP	09/29/2011
U347S	N/A	Pad R Rad Measurements	Randall C. Morris	12/05/2012
U348S		Rocky Flats to INEEL Shipping and Loading Record Search for the 1960's and Early 1970's ()		12/11/1998
U349S	TAN-U002	(TAN-U002)		
U350S	RF-U125	Description and recommendation of unwanted chemical disposal (RF-U125)	Idaho National Lab (INL)	No date
U351S	AE-I-157	Queries from WMS Database for Physical Form, Radionuclides, and Waste Containers (AE-I-157)	Central Characterization Project (CCP)	07/19/2000
U352S	ANL-CMTI-10999	CMT Division Separation Science and Technology Section (ANL-CMTI-10999)	ANL-E, George Vandegrift	01/05/1994
U353S	N/A	ANL-E Waste Management System Database	Waste Management Operations Department	N/A
U354S		()		
U355S	AE-I-191	Evaluation of Chemicals Used by New Brunswick Laboratory (AE-I-191)	New Brunswick Laboratory (NBL)	09/15/2000

Implementing Document: MP-TRUW-8.13

TRACKING NUMBER	DOCUMENT NUMBER	DOCUMENT TITLE/DESCRIPTION	DOCUMENT AUTHOR	DOCUMENT DATE
U356S	AE-I-192	Evaluation of Chemicals used by the Analytical Chemical Laboratory (AE-I-192)	ANL-E, Krause, Tom	09/15/2000
U357S	AE-I-193	Evaluation of Chemicals used by the Chemistry Division (AE-I-193)	ANL-E, Krause, Tom	09/15/2000
U358S	AE-I-200	Physical form worksheet for the AECHDM and AECHHM waste streams (AE-I-200)	ANL-E. Gary Lasswell	09/30/2003
U359S	AE-I-202	ANL-E DR/CT Data for the AECHDM waste stream (AE-I-202)	ANL-E, Steven Rose	11/18/2002
U360S	AE-I-203	ANL-E VE Data for the AECHDM waste stream (AE-I-203)	ANL-E, David B Becker	01/03/2003
U361S	AE-P-001	Database Documentation of 0-2120&0 Gloveboxes (AE-P-001)	ANL-E, R.E. Nietert	09/02/1992
U362S	AE-U-2	Hazardous Waste Permit Application Part A (for ANL-E) (AE-U-2)	ANL-E, DOE,Argonne,	12/19/1990
U364S	N2-AE-U-3-001	Reference Drawing, Building 212 Second Floor, Wing "D0", Site "D" (N2-AE-U-3-001)	ANL-E	07/23/1969
U365S	AE-U-4	IPASS Summary Report for ANL-E TRU Waste Streams (AE-U-4)	ANL-E, DOE	08/17/2000
U366S	AE-U-5	General Description of Building 200 (AE-U-5)	ANL-E, A. Youngs,	08/14/2000
U367S	AE-U-6	Excel Spreadsheet -- Additional 29 containers added 7/03 (AE-U-6)	ANL-E, David B Becker	07/01/2003
U368S	AE-U-7	Waste stream inventory worksheets (AE-U-7)	ANL-E, David B Becker	10/02/2003
U369S	ANL 014 02 88	Field Work Proposal - Multi-megawatt Nuclear Space Power Systems; Reactor Fuels -Cermet Development (ANL 014 02 88)	ANL-E, L. A. Nelmark	04/15/1987
U370S	CCP: U304	Robinson Report (CCP: U304)	N/A	N/A
U371S	CCP: AE-I-196	TRU Waste Packaging Venting Data Sheets (CCP: AE-I-196)	ANL-E	2000, 2001
U372S	CCP: U307	Report 105. Custodian Batch Balance (Pure) (CCP: U307)	N/A	12/01/2004
U373S	CCP: U309	Limerick Power. Fuel Rods Retrieved from Assembly YJ1433 (CCP: U309)	N/A	N/A
U374S	CCP: U321	Area 1 Hydrogenous Liquid Inventory (Limit 3L plus fluids sealed in equipment) (CCP: U321)	N/A	N/A
U375S	CCP: U322	Hydrogenous Liquid in Cell Area I (CCP: U322)	N/A	N/A
U376S	CCP: U330	West Valley Demonstration Project Transuranic Waste Defense Waste Determination (CCP: U330)	K. J. Peters	09/20/2004

Implementing Document: MP-TRUW-8.13

TRACKING NUMBER	DOCUMENT NUMBER	DOCUMENT TITLE/DESCRIPTION	DOCUMENT AUTHOR	DOCUMENT DATE
U377S	CCP: U338, 6F-00069	Appendix "B", Statement of Work, Characterization of ANL RH-TRU Waste (CCP: U338, 6F-00069)	N/A	02/17/2006
U378S	CCP: U339, CH Ref. AE-U-5	General Description of Building 200 Provided by Al Young (CCP: U339, CH Ref. AE-U-5)	Al Young	08/14/2000
U379S	CCP: U380, ANL ID 6808	RERTR-3 Postirradiation Examination Plan at the Alpha-Gamma Hot Cell Facility; transmitted by memo from S. L. Hayes to R. V. Strain (CCP: U380, ANL ID 6808)	S. L. Hayes and M. K. Meyer	01/13/2000
U380S	CCP: U2001	Chemical Technology Building K-Wing Hot Cell Pictures (CCP: U2001)	Laura E. Maggos	07/21/2009
U381S	CCP: U2002	CMT Nuclear Materials Inventory Database - detail report with ratios and FGEs (CCP: U2002)	N/A	07/21/2009
U382S	CCP: U2003	Argonne National Laboratory A SQS Presentation (CCP: U2003)	Devin S. Hodge	06/09/2009
U383S	CCP: U2004	Material in K-Wing 07-29-09 Spreadsheet (CCP: U2004)	Laura E. Maggos	02/11/2009
U384S	CCP: U2006	Alpha Gamma Hot Cell Facility (AGHCF) Hot Cell Pictures (CCP: U2006)	Daniel C. Pancake, Jr.	07/22/2009
U385S	CCP: U2007	RW85461 WMO-195 Radioactive and Mixed Waste Disposal Requisition (CCP: U2007)	Devin S. Hodge	08/20/2003
U386S	CCP: U2008	RW85462 WMO-195 Radioactive and Mixed Waste Disposal Requisition (CCP: U2008)	Devin S. Hodge	08/20/2003
U387S	N/A	Videotape Logs	Cheryl L. Schultz	09/15/2001
U388S	285J1??, CCP: U045	Material Receipt and SPM Data for A/G # 285J1 (285J1??, CCP: U045)	W. P. Kenney, D. Garcia	01/04/1985
U389S	CCP: U065	Hand written Notes: One titled "Decon & Repair Procedures for Cleaning and Repairing a Manipulator" (CCP: U065)	N/A	03/24/1987
U390S	CCP: U066	Addendum Criticality Safety Training Quiz 7/17 or 7/21/75 (CCP: U066)	N/A	07/21/1975
U391S	RW85463, CCP: U2009	RW85463 WM0-195 Radioactive and Mixed Waste Disposal Requisition (RW85463, CCP: U2009)	Devin S. Hodge	08/20/2003
U392S	CCP: U2010	Contactor Cleaning Procedure (CCP: U2010)	Scott Aase and Ralph Leonard	08/19/2003
U393S	NOD-205K-OPS-302, CCP: U2011	Gated Drum Shield Operations and Movements in 205 K-wing (NOD-205K-OPS-302, CCP: U2011)	ANL	08/14/2009

Implementing Document: MP-TRUW-8.13

TRACKING NUMBER	DOCUMENT NUMBER	DOCUMENT TITLE/DESCRIPTION	DOCUMENT AUTHOR	DOCUMENT DATE
U394S	NOD-OPS-301, CCP: U2012	Preparation of Container/Shielding Configurations for Material Transfers from C-cell (NOD-OPS-301, CCP: U2012)	ANL	06/26/2009
U395S	CCP: U2013	30 Gallon Drum (Spec 7A) RH-TRU Debris + FEW Configuration (CCP: U2013)	N/A	N/A
U396S	Several. One is IPS-26-00-00, CCP: U067	Information on Fuel Elements T678 and T680 (Several. One is IPS-26-00-00, CCP: U067)	N/A	05/24/2001
U397S	CCP: U068	Information on Fuel Elements DP-15, DP-17, DP-27, DP-32, DP-21, DP-24, DP-29, DP-45, and DP-61 (CCP: U068)	N/A	N/A
U398S	CCP: U069	Information on Fuel Elements UBA-15, UBB-23, UCA-37, UCD-45, UCE-47 (CCP: U069)	N/A	N/A
U399S		AGHCF Position Statement Regarding Defense Versus Non-Defense TRU Waste ()	AGHCF .TRU .source.OI	04/07/2000
U400S	CCP: U070	Information on Fuel Element WT-185 (CCP: U070)	N/A	N/A
U401S		Draft Proposal For: A1pha-Gamman Hot Cell Facility Waste Management Plan ()	N/A	N/A
U402S	CCP: U072	Material Safety Data Sheets (MSDS)--various metal and chemical compounds (CCP: U072)	N/A	N/A
U403S		Argonne National Laboratory-West Mission Description ()	N/A	N/A
U404S	CCP: U073	Combustible Waste Contents (52 cans) (CCP: U073)	N/A	N/A
U405S	CCP: U074	Information on Fuel Element T61 of Subassembly X425 (CCP: U074)	N/A	03/11/2002
U406S	CCP: U076	AGHCF Fissile Inventory Management System Database (CCP: U076)	N/A	N/A
U407S	CCP: U083	HEPA Filters (CCP: U083)	Adam Cohen	03/07/1996
U408S	CCP: U084	Report of Analytical Results (CCP: U084)	D. Bowers	11/03/1995
U409S	CCP: U085	Procedure for Determining Fuel Pellet Density Using a Mercury Prinometer (handwritten) (CCP: U085)	N/A	N/A
U410S		Remote-Handled Waste Content Codes Assessed ()	N/A	N/A
U411S		Summary of Purchasing Requisitions Received from T. Bray: Heavey Metals Usage Identified by IT That May Be in the RH-TRU Waste Stream ()	N/A	09/06/2001

Implementing Document: MP-TRUW-8.13

TRACKING NUMBER	DOCUMENT NUMBER	DOCUMENT TITLE/DESCRIPTION	DOCUMENT AUTHOR	DOCUMENT DATE
U412S	CCP: U009	Transuranic Waste at Argonne National Laboratory-West: Meeting the Waste Acceptance Criteria for the TRU Repository (CCP: U009)	N/A	08/10/2001
U413S	CCP: U011	Project Process Flow Diagram: Fuel Elements from EBR-II and FFTF (CCP: U011)	N/A	N/A
U414S	CCP: U012	Basis for Assessment of the Environmental impact of the expanded Program at Argonne-East (CCP: U012)	N/A	N/A
U415S	CCP: U013	Waste Stream Fissile Content (CCP: U013)	N/A	03/23/1990
U416S	CCP: U015	RH-TRU 1995, Book 5, Drums 798 to 809 (CCP: U015)	N/A	01/01/1995
U417S	CCP: U017	RH-TRU 1994, Book 8, Drums 778 to 797 (CCP: U017)	N/A	N/A
U418S	CCP: U018	RH-TRU 1993, Book 7, Drums 748 to 777 (CCP: U018)	N/A	N/A
U419S	CCP: U019	RH-TRU 1991-1992, Book 6, Drums 728 to 737 (CCP: U019)	N/A	N/A
U420S	CCP: U021	RH-TRU 1990, Book 4, Drums 687 to 727 (CCP: U021)	N/A	N/A
U421S	CCP: U022	RH-TRU 1985-1987, Book 3, Drums 617 to 686 (CCP: U022)	N/A	N/A
U422S	N/A	Historical Content Code Table	Kirk Green	03/08/2012
U423A	N/A	Radiation Data for INL Generators from IWTS	Randall C. Morris	03/14/2013
U424A	N/A	Measured INL Waste Isotopics	Randall C. Morris	03/20/2013
U425A	N/A	Prohibited Items in INL Waste	Randall C. Morris	03/14/2013
U426S	N/A	Spreadsheet of INL historical information from WTS, RWMIS, and IWTS.	Randall C. Morris	N/A
U427S	NA	Logbook - pages 138 and 140 (NA)	Unknown	08/10/1976
U429S	N/A	Mission Need and Technical Function Requirements for the TRA Lab Effluent Management System	INEEL	05/19/1998
U430S	N/A	Data Package for TRA Hot/Warm Waste Systems "Listed" Hazardous Waste Issue Chronology & Resolution	G.P Swaney, Intrepid Engineering Services	05/07/2002
U431S	N/A	Aerojet Nuclear Company, EG&G Experiment Logs, and Facility Log for HCF; WWTF handwritten log	Various Authors	Various
U432S	N/A	Hot Cell 2 Logbooks	Various Authors	Various
U433S	N/A	Form 1066 - BN	AMWTP	09/16/2013

Implementing Document: MP-TRUW-8.13

TRACKING NUMBER	DOCUMENT NUMBER	DOCUMENT TITLE/DESCRIPTION	DOCUMENT AUTHOR	DOCUMENT DATE
U434S	N/A	Form 1066 - RF	AMWTP	09/16/2013
U435S	N/A	2013 WTS query - WIPP PIs	AMWTP	09/17/2013
U436A	N/A	INL Assay Results 06-19-13	Randall C. Morris	06/19/2013
U437A	NA	BL Isotopic Data (NA)	Randall C. Morris	01/08/2014
U438S	N/A	TRA010029 Radionuclide Spreadsheet	Unknown	09/11/2013
U439S	TRA010029	Integrated Waste Tracking System Container Profile for TRA010029 (TRA010029)	N/A	08/28/2013
U440A	N/A	Assay Isotopes 04/12/11	Randall C. Morris	04/12/2011
U441S	N/A	IWTS Container Radiological Report, Container TRA010029, Material Profile 5649N	N/A	09/08/2013
U442A	N/A	Argonne National Laboratory East source references	AMWTP	2013
U443S	NA	TSA disposal year by generator and container type. (NA)	Randall C. Morris	10/25/2012
U444S	NA	Measured BN510.2 and BN510.3 Isotopics (NA)	Randall C Morris	05/14/2014
U445A	N/A	RH Inventory Crosswalk	Randall C. Morris	05/01/2013

AMWTP Advanced Mixed Waste Treatment Project

AMWTP SURVEILLANCE REPORT

Surveillance No: 74798

Title: Evaluation and reporting of headspace gas sampling and analysis data

Originator: Labruyere, Gary	**Assigned Actionee:** Ryman, Lyle
Date Opened: 12/26/12	**Date Due:** 09/18/13
Risk Level: Low	**Responsible Manager:** George Byram
Functional Area: TRU AK	**Surveilled Organization:** Waste Programs

Surveillance Area: Tru Programs

Scope of Surveillance:

Examine processes AMWTP TRU Program implements for evaluation and reporting of headspace gas analysis data prepared to support preparation of waste stream profile forms. Evaluate the adequacy and effectiveness of the processes in meeting TRU Program requirements.

Scheduled By: Angela Morse	**Scheduled Date:** 01/21/13
Rescheduled By: Angela Morse	**Rescheduled Date:** 05/02/13

SURVEILLANCE PLAN

Surveillance Method: Other - Identified in Plan

Source/Requirements Documents:

MP-TRUW-8.2, *Quality Assurance Project Plan*
MP-TRUW-8.13, Collection, Review, and Management of Acceptable Knowledge Documentation
MP-TRUW-8.25, Random Selection of Containers for Headspace Gas and Solids Sampling and Analysis
MP-TRUW-8.14, *Preparation ofWaste Stream Profile Forms*

Surveillance Plan:

Review records and documents associated with BN510.1 Boxline Lot 3, the third lot from an indeterminate waste stream, for compliance with the

1. characterization data evaluation requirements defined in MP-TRUW-8.13 section 3.8;
2. MP-TRUW-8.14 requirements defined in steps 3.1.3 and 3.1.7 for the preparation and review of the headspace gas characterization information summary report tables; and
3. MP-TRUW-8.25 Appendix A requirements for evaluating headspace gas data to be used in the final HWN determinations and assignments to the waste stream.

Ensure all applicable headspace gas data generation, reductions, and reviews were evaluated for technical adequacy, accuracy, completeness, and suitability for intended use.

Methods used to perform the surveillance:a. Interviewing personnel to determine if they are knowledgeable and qualified to perform their assignment.b. Reviewing records for compliance and consistency with implementing procedure and program requirements.

SURVEILLANCE RESULTS

Surveillance Summary:

Information Only

AMWTP
Advanced Mixed Waste Treatment Project

AMWTP SURVEILLANCE REPORT

Surveillance No.: 74798

Surveillance results indicate TRU Program processes implemented for evaluation and reporting of headspace gas analysis data, prepared to support development of waste stream profile forms, are compliant with the assessed requirements defined in MP-TRUW-8.13, MP-TRUW-8.25, and MP-TRUW-8.14. There was, however, one administrative oversight identified during the performance of this surveillance that did not affect data quality and was determined to be an anomaly requiring no corrective action. Details are provided within this report.

Surveillance conclusion is based upon personnel interviews and comparison reviews of records and documents relevant to BN510.1 Boxline Lot 3 and associated waste stream. TRU Program records and documents selected for review are included in this report as *Attachment 1-Procedures and documents.docx* and are located on the AMWTP Electronic Document Management System (EDMS) or the database management system Enterprise. Materials evaluated during the surveillance include the following examples, also included with this report:

- BN510.1 Boxline Lot 3 Hand Calc 2013-05-02.xlsx
- Boxline 3 all HS 3-6-13 new.xlsm
- Boxline 3 all HS 4-2-13 Random TICs Summary.docx
- boxline 3 prelim 4-30-13.xlsm
- HS Drum sample report Lot 2.pdf
- HS Drum sample report Lot 3(Examples).pdf
- WTS container screenshots (Examples).pdf

One administrative discrepancy was identified within the *Headspace Gas Sampling Report for BN510.1 Boxline Lot 3*, SPC-011-13. The "Comments" field of Attachment A, *Evaluation of Required Number of Samples. BN510.1 Boxline Lot 3*, should have identified the applicable HWNs for methylene chloride as "F001/F002" instead of "F002/F002", as shown in Table 1A. *Headspace Gas Summary Data* of the report. The oversight does not affect HWN assignments for the lot or the waste stream.

Based on the results of this surveillance, implementation of the processes defined in MP-TRUW-8.13, MP-TRUW-8.25, and MP-TRUW-8.13 are compliant, adequate, and effective.

CAQ(s) Identified?: No	**CAR or NCR No.** N/A

Conditions Adverse to Quality:
No conditions adverse to quality were identified.

Strengths:
N/A

Observations/Recommendations:
No observations were identified.

Effectiveness Evaluation:
Based on the results of this surveillance, the processes implemented for evaluation and reporting of headspace gas analysis data prepared to support preparation of waste stream profile forms, are compliant.

Performed By: Lyle Ryman	**Performed Date:** 09/03/13
Additional Action Complete By:	**Additional Action Complete Date:**

QA MANAGER - SURVEILLANCE REVIEW

1. Are all Conditions Adverse to Quality properly identified?	NA
2. Are all Conditions Adverse to Quality reported on a CAR or NCR?	NA
3. Are follow up actions identified for any Recommendations?	NA

QA Manager Review Comments:

AMWTP
Advanced Mixed Waste Treatment Project

AMWTP SURVEILLANCE REPORT

Surveillance No.: 74798

Surveillance results indicate TRU Program processes implemented for evaluation and reporting of headspace gas analysis data, prepared to support development of waste stream profile forms, are compliant with the assessed requirements defined in MP-TRUW-8.13, MP-TRUW-8.25, and MP-TRUW-8.14. The processes implemented for evaluation and reporting of headspace gas analysis data prepared to support preparation of waste stream profile forms are compliant.

Additional Action Required By:	**Additional Action Required Date:**
QA Manager Review/Closed By: Angela Morse	**QA Manager Review/Closed Date:** 09/09/13
QA Manager Cancelled By:	**QA Manager Cancelled Date:**

AMWTP
Advanced Mixed Waste Treatment Project

AMWTP SURVEILLANCE CHECKLIST

Surveillance Checklist No.: 74798

Title: Evaluation and reporting of headspace gas sampling and analysis data

Assigned Actionee: Ryman, Lyle	**Responsible Manager:** George Byram
Surveilled Organization: Waste Programs	**Functional Area:** TRU AK
Surveillance Area: Tru Programs	

Scope of Surveillance:

Examine processes AMWTP TRU Program implements for evaluation and reporting of headspace gas analysis data prepared to support preparation of waste stream profile forms. Evaluate the adequacy and effectiveness of the processes in meeting TRU Program requirements.

SPECIFIC ATTRIBUTES

Item No. 1. Line of Inquiry: **Results: SAT**

Ensure any constituents from statistical evaluations of headspace gas analyses that have the potential to require the addition of HWNs to the waste stream are identified. Constituents identified from a lot with an approved WSPF are reevaluated using data from the entire waste stream.

I. Appropriate spent solvent code HWNs are identified if:

a. The listed constituent's (other than F003 constituents) UCL90 value exceeds PRQL, unless justified by documentation on Form-1070.
b. The source of the constituent is identified as a spent solvent (40 CFR 261, Subpart D) or is the result of mixing a listed waste with a solid waste.
c. The source of the detected solvents cannot be identified.
d. F003 constituent UCL90 value exceeds PRQL, unless justification is documented in the AK summary report.

II. Appropriate toxicity characteristic HWNs are identified if:

e. Toxicity characteristic (TC) contaminant is identified by AK as present in the waste and is not a listed waste or included as a listed waste, unless available data demonstrates the concentration of the constituent is less that the TC regulatory level or if results of evaluation does not require assignment.
f. Include summaries of statistical evaluations and a statement confirming that all containers evaluated belong to the waste stream, as applicable.

MP-TRUW-8.13 Rev. 24 steps 3.8.1 through 3.8.5
MP-TRUW8.25 Rev. 19 Appendix A.6
I verified this line of inquiry by using the interview process and by performing comparison reviews of relevant documents and QA records provided in this report. Mathematician, SPM, and AKE perform independent reviews of the data to assure accuracy in reporting. Verified the HWNs were properly applied for BN510.1 Boxline Lot 3 and the waste stream. *Note: HWN may not be required to be added if it can be demonstrated that the constituent is associated with packaging materials, radiation, or other uses that are not consistent with solvent use.*

Item No. 2. Line of Inquiry: **Results: SAT**

AMWTP
Advanced Mixed Waste Treatment Project

AMWTP SURVEILLANCE CHECKLIST

Surveillance Checklist No.: 74798

Verify the following actions are completed by the AKE and SPM in accordance with procedure:

a. Verify AKE coordinates with the SPM the assignment of HWNs to the waste stream based on the results of the evaluation.
b. Completion of Form-1187 to document the results.
c. Incorporate the worksheet into the AK record with the WSP package.
d. NCR is initiated if the SPM determines that a new HWN is required to be added to waste with an approved WSPF.
- SPM documents the criteria used to determine the specifics under which a WSPF is revised versus when a new WSPF is required.(Form-1070)
- Complete a new or revised WSPF.

e. SPM documents the HWN changes on a Form-1070 and in the AK summary report if it is determined that a change is required for waste not included in an approved WSPF.
f. If the SPM determines an HWN change is conservatively applied for waste not included in an approved WPSF, the changes are documented in the AK summary report.

MP-TRUW-8.13 Rev. 24, steps 3.8.6 through 3.8.9
I verified this line of inquiry by using the interview process and by performing comparison reviews of relevant documents and QA records provided in this report. SPM notifies AKE of any inconsistencies between characterization data and AK. No additional HWNs needed to be assigned and the originally assigned HWNs for the BN510.1 WSPF were retained. Initiation of nonconformance reports, Form-1070, Form-1068, and Form-1187 were not required for BN510.1 Boxline Lot 3.

Item No. 3. Line of Inquiry: **Results: SAT**

Ensure the following calculations and evaluations were verified in accordance with procedure using approved formulas, validated/certified software packages, and methodology.

a. Normality of the data was tested (e.g. Shapiro-Wilk test) and transformation of the data was performed as necessary.
b. Data set for each analyte of interest was generated and included container numbers, field and laboratory sample numbers, analyte names, concentrations, units and reporting flags. *(Note: Replicate, duplicate or co-located samples are not included in the data set.)*
c. All headspace gas data (except those with elevated detection limits with "U" and "D" flags) were used to determine sample mean and standard deviation for each analyte.
d. Sample mean ( ) and standard deviation (*s*) for each analyte were calculated and verified.

MP-TRUW-8.25 Revision 19, Appendix A
Verified through the interview process with the SPM and Mathematician and by performing comparison reviews of relevant documents and QA records provided in this report Results of the interview process determined statistical calculations performed on solids sampling data are performed using QA verified SAS program software with checks built into the program. The "solids.sas" program performs these calculations and provides the output used for the CIS reports.
Statistical calculations performed on Headspace gas sampling data are performed using Microsoft Excel® software and the formulas identified within MP-TRUW- 8.25. These calculations are checked by picking several analytes and reviewing the associated information. *Note: Statistician has the formula expressions used to calculate the data required for the CIS reports (Form-1598 UCL90, mean, deviations, etc.) available.* A Statistician also reviews the final CIS Tables as appropriate to ensure the information provided is accurate.

- 1A,Headspace Gas Summary Data
- 1B,Headspace Gas Summary Data –Tentatively Identified Compounds
- Attachment A, Evaluation of Required Number of Samples

Additional information is checked by the Site Project Manager.

- 5, Correlation of Container Identification Numbers to Data Package
- 7, Correlation of Container Numbers to Sample Numbers

Line of inquiry items a, b, c, and d were verified for BN510.1 Boxline Lot 3. Items b and c were verified for the waste stream.

Item No. 4. Line of Inquiry: **Results: SAT**

Verify the estimated numbers of waste containers were randomly selected and:
a. The samples were analyzed for all the target analytes using INST-OI-43, HGAS Sampling and Analysis Operations.
b. Standard deviation was calculated for each of the nine VOCs in Table 4.4.1 of the WIPP Hazardous Waste Facility Permit.
c. The number of samples needed to representatively sample the waste stream (***nvoci***) was determined as the largest number of samples calculated (≤ the number of containers in the waste stream or lot).

MP-TRUW-8.25 Revision 19, Appendix A.3
I verified this line of inquiry by using the interview process and by performing comparison reviews of relevant documents and QA records provided in this report. Line of inquiry items a, b, and c were verified for BN510.1 Boxline Lot 3. Items a and b were verified for the waste stream.

Item No. 5. Line of Inquiry: **Results: SAT**

Verify waste container samples used to calculate mean and variance estimates and counted as part of the total calculated number of required samples were:
a. Selected in the same random manner as the required samples.
b. Collected and analyzed with identical methodology employed for required samples.
c. Validated and all the samples' results are valid according to analytical methodology.
d. Determined to be an adequate number of samples taken for headspace analysis, using data from the randomly selected samples. (Note: Randomly sample additional required number if **N0** ≤ 80% of ***nvoc*** for headspace gas analysis.)

MP-TRUW-8.25 Revision 19, Appendix A.3 and A.4
I verified this line of inquiry by using the interview process and by performing comparison reviews of relevant documents and QA records provided in this report.
Line of inquiry items were verified for BN510.1 Boxline Lot 3 and the waste stream.

Item No. 6. Line of Inquiry: **Results: SAT**

Verify the SPM prepared Form-1098 and ensured that the appropriate tables were completed:
1. Table 1A. Headspace gas Summary Data
2. Table1B. Headspace Gas Summary Data-Tentatively Identified Compounds
3. Table 5. Correlation of Container Identification Numbers to Data Package
4. Table 7. Correlation of Container Numbers to Sample Numbers
5. Attachment A. Evaluation of Required Number of Samples. BN510.1 Boxline Lot 3

MP-TRUW-8.14 Rev. 13 steps 3.1.3 and 3.1.7
MP-TRUW-8.25 Revision 19, Appendix A.7

I verified this line of inquiry by using the interview process and by performing comparison reviews of SPC-011-13 Form-1598 with relevant documents provided in Attachment 1 of this report.
A SPM and Statistician independently review the final CIS Tables as appropriate to ensure the information provided is accurate.
- 1A,Headspace Gas Summary Data
- 1B,Headspace Gas Summary Data –Tentatively Identified Compounds
- Attachment A, Evaluation of Required Number of Samples

Additional information is checked by the Site Project Manager.
- 5, Correlation of Container Identification Numbers to Data Package
- 7, Correlation of Container Numbers to Sample Numbers

One administrative discrepancy was identified within the *Headspace Gas Sampling Report for BN510.1 Boxline Lot 3*, SPC-011-13. The "Comments" field of Attachment A, *Evaluation of Required Number of Samples. BN510.1 Boxline Lot 3*, should have identified the applicable HWNs for methylene chloride as "F001/F002" instead of "F002/F002", as shown in Table 1A. *Headspace Gas Summary Data* of the report. The oversight does not affect HWN assignments for the lot or the waste stream and is considered an anomaly.

Assessment Plan

Independent Assessment No. IA-14-002

TRU Programs Acceptable Knowledge, Data Reconciliation, and Waste Certification

1.0 SCOPE AND PURPOSE

This independent QA assessment of the AMWTP TRU Programs will evaluate compliance with requirements specified in MP-TRUW-8.2, *Quality Assurance Project Plan* and MP-TRUW-8.1, *Certification Plan for INL Transuranic Waste*.

The evaluation will include examinations of AMWTP data reconciliation, acceptable knowledge, and waste certification processes as implemented through MP-TRUW-8.11, *Data Reconciliation*; MP-TRUW-8.13, *Collection, Review, and Management of Acceptable Knowledge Documentation*; MP-TRUW-8.14 Rev. 15, *Preparation of Waste Stream Profile Forms*; and MP-TRUW-8.5 Rev. 29, *TRU Waste Certification*.

2.0 SPECIAL INSTRUCTIONS

Lines of inquiry will be developed to evaluate the effectiveness and compliance of the data reconciliation, acceptable knowledge, and waste certification processes.

Personnel interviews, observation of work activities, reviews of previous management assessments, corrective actions, surveillances, and review of TRU program records and documents completed within one year prior to the start of this assessment will be used to gather information.

3.0 INDEPENDENT ASSESSMENT TEAM

Lead Auditor: Lyle Ryman

Auditor: Michelle Sharp

4.0 SCHEDULE DATES AND LOCATIONS

Formal entrance and exit meetings are not scheduled at this time but may be scheduled as requested/needed by the TRU Program Manager. This assessment will be conducted August 26, 2014 through September 25, 2014 at the AMWTP facility on-site and at 850 Energy Drive, Idaho Falls, Idaho.

5.0 STANDARDS, REQUIREMENTS, GOVERING DOCUMENTS

MP-TRUW-8.2 Rev. 17, *Quality Assurance Project Plan*

MP-TRUW-8.1 Rev. 24, *Certification Plan for INL Transuranic Waste*

MP-TRUW-8.13 Rev. 25, *Collection, Review, and Management of Acceptable Knowledge Documentation*

MP-TRUW-8.14 Rev. 15, *Preparation of Waste Stream Profile Forms*

MP-TRUW-8.11 Rev. 26, *Data Reconciliation*

MP-TRUW-8.5 Rev. 29, *TRU Waste Certification*

Developed By: Lyle Ryman Date: 8/11/14

Lead Auditor, Lyle Ryman

Approved: Angie Morse Date: 08-11-2014

AMWTP QA Manager, Angie Morse

QA CHECKLIST
MP-TRUW-8.13

Report Number: IA-14-002

Item No.	Section	Requirements	Sat	Unsat.	N/A	Verification Conducted
		AK Data Collection, Review, and Evaluation				
1	1.0, 2.0, 3.2, 3.3, 4.0	Verify source and supporting AK documents were collected, assembled, reviewed, summarized, and controlled as described within MP-TRUW-8.13. Ensure the following: a. Source documents/applicable information were collected for each generator site. b. AK source documents were assigned a unique alphanumeric identifier and correct suffix. c. Form-1068, *AK Source Document Review Summary,* was completed for each source document added to the AK source document inventory, documents appropriate data limitations, and is included in the AK record. d. Form-1066, *TRU Waste Management AK Checklist,* was prepared for each generator site and IDC, addresses the mandatory program information, and updated as additional information is collected and reviewed. e. Form-1067, *TRU Waste Stream AK Documentation Checklist,* was prepared for the generator and each waste IDC or waste stream and included the mandatory information. f. All specific, relevant supporting AK documentation assembled and used in the AK process was identified, documented whether it supported or contradicted a required AK documentation, and provided an explanation for its use. g. All hazardous waste codes applied to the subject waste stream are consistent with RCRA requirements. h. Relevant AK information resulting from meetings, telecommunications, and interviews were documented on Form-1069, *AK Telecom/Interview Form,* and summarized on Form-1068. i. Form-1084, *AK Source Document Reference List,* listed each source document using procedure convention.				MP-TRUW-8.13
2	2.0, 3.2, 4.0	Verify Form-1084, Form-1066, and Form-1067 provide a cross reference between programmatic and waste stream information with the AK source documents supporting these requirements.				MP-TRUW-8.13
		Prepare AK Document				
3	3.3.1	Verify the AK information bounds the AMWTP waste inventory with regard to time of generation, area of generation, and generation process (Form-1066 and Form-1067) and the SPM is notified if required elements have not been adequately addressed.				MP-TRUW-8.13

Report Number: IA-14-002

Item No.	Section	Requirements	Sat	Unsat	N/A	Verification Conducted
4	1.0, 2.0, 3.1, 3.2, 3.3, and App. F	Verify the relevant AK documents have been prepared for each generator site and address all of the WAP/WAC mandatory waste management and waste stream information for the generator and each waste stream, including proper waste stream delineation. **I) Waste Management Level Information** a. Facility mission description (including map of site) b. Defense determination c. Description of operations that generated the waste d. TRU waste management (including waste identification or categorization scheme) e. Waste certification procedures (including generator site procedures, if available) f. TRU waste inventory (types and quantities, may be included in sections specific to the waste) g. Correlation of waste stream generated (e.g., waste groupings presented in the sections specific to the waste) **II) Waste Stream (Group) Level Information** a. Waste description (including physical form and time period of generation) b. Waste generation c. Areas and/or buildings from which the waste was generated d. Process flow diagrams (may be reference to document) e. Information identifying chemical content, physical form, and waste volume f. Waste packaging g. Waste characterization based on AK (material inputs/historical management) h. Identification of EPA Hazardous Waste Numbers i. Identification of radionuclides j. Identification of prohibited items k. Identification of PCBs, if applicable				MP-TRUW-8.13
5	1.0, 3.3.2	Verify offsite generator supplied PK/AK documents associated with waste sent to AMWTP for treatment/storage at AMWTP and are: a. Compliant with MP-TRUW-8.40 and MP-TRUW-8.41 b. Placed into a TRU program report that summarizes the intent of the referenced documents c. Applicable AK documents referenced in the AK/PK documents are included in the AK records				MP-TRUW-8.13
		Development of AK Reports				

Report Number: IA-14-002

Item No.	Section	Requirements	Sat	Unsat.	N/A	Verification Conducted
6	3.4.1	**AMWTP Waste Matrix Code Reference Manual** Verify RPT-TRUW-05, *Waste Matrix Code Reference Manual*, provides physical waste form descriptions to ensure proper SCG and WMC assignments and that it includes the following: a. Pertinent AK information regarding waste generator, physical form, packaging. b. Information used to identify wastes and correlate the physical form and SCG and WMC assignment. c. Pertinent characterization information (i.e. potential prohibited items, acceptable/unacceptable packaging variations, and PCB). d. Descriptions of typical variations of waste information based on data collected during RTR and VE exams.				MP-TRUW-8.13
7	3.4.2	**Waste Stream Radionuclide Information Summary** Verify the radiological information of TRU waste from each generator site that is characterized by AMWTP, is summarized in RPT-TRUW-07, *Determination of Radioisotopic Content in TRU Waste Based on Acceptable Knowledge* and that it fulfills the requirements identified in the WIPP-WAC. a. Default radioisotopic ratios are determined for those radionuclides expected, based on the compiled AK. b. Radionuclides that may be expected to be quantifiable or calculated by NDA technique in the wastes. c. All numerical adjustments applied to derive the materials isotopic distribution are documented. d. Two most prevalent radionuclides and their ratios in the isotopic mix for each generator site are identified and documented.				MP-TRUW-8.13
8	3.4.3	**AMWTP Waste Stream Designations** Verify RPT-TRUW-12, *AMWTP Waste Stream Designations*, provides current information on the delineation of wastes into waste streams and HWN assignments. a. WMC assignments, delineation of waste into waste stream are updated as AK summaries are developed. b. Potential hazardous waste constituent/chemical property and generator and AK/WIPP assigned HWNs are identified and/or updated.				MP-TRUW-8.13
		Prepare an AK Summary Report				

Report Number: IA-14-002

Item No.	Section	Requirements	Sat	Unsat.	N/A	Verification Conducted
9	3.2, 3.5, App. B, D	**AK Summary Report for a Waste Stream** Verify an AK summary report is prepared for each waste stream and includes, at a minimum, the following information: **I) Waste Stream Information** a. Waste Stream Number b. Waste Stream Name c. Physical Waste Form, including the Summary Category Group, WMC Group, WMC, TRUCON Codes, and TWBIR/ATWIR information. d. Point of Generation e. Waste Stream Volume – current and projected (including estimate of percent ≤100 nCi/g if load management will be applied to the waste stream) and ensure memorandum to file was prepared f. Time Period of Generation g. Defense Determination h. Waste Stream Description i. Waste Generating Processes j. Process Flow Diagrams k. Material Inputs l. Identification of Waste Material Parameters & percent weight for the waste stream. m. Estimated weight % for each material parameter n. Prohibited Items and description of AMWTP controls which screen for prohibited items. o. EPA Hazardous Waste Numbers RCRA Determination and rationale for assignments p. Radionuclides (Description of anticipated radionuclides, radiological composition, and plutonium content for each waste stream based on AK information in RPT-TRUW-07 q. . Identify the two most prevalent radionuclides and document compliance with high-plutonium content requirement. r. Form-1067 was prepared. s. Required waste stream information from Sec. 3.2 is incorporated. t. All HWN information and assignments are auditable. u. Relevant information is consistent with AK document information and applicable AK reports. v. Incorporation of appropriate Form-1070 and Form-1784 information.				MP-TRUW-8.13
		AK Sufficiency Determination Request Preparation				

Report Number: IA-14-002

Item No.	Section	Requirements	Sat	Unsat.	N/A	Verification Conducted
10	3.6 App. C	Verify sufficiency determination requests (SDR), if required, includes the following information, at a minimum: a. Results of the evaluation of available AK information determined an AK SDR is possible or desirable for exemption from the requirement to perform RTR or VE. b. AK Summary report, roadmap were prepared. c. Complete reference list of all mandatory and relevant programmatic and waste stream information/data have been provided, as applicable or if requested by CBFO. d. Identification of any mandatory requirements supported only by upper tier documents. e. Description or demonstration that the AK process described in the WIPP-QAP was followed. f. Information showing AMWTP assessed the AK process is provided.				MP-TRUW-8.13
		Resolution of Inconsistencies and Discrepancies and Reevaluation of AK Information				
11	3.5.7, 3.7, 3.8, App. D, App. E	Verify inconsistencies between AK and characterization are documented, tracked, evaluated, resolved, and filed in accordance to procedure: a. Documented on Form-1070, *Acceptable Knowledge Resolution (AKR) Checklist,* b. Tracked in the AK Resolution Ledger, c. Maintained by Records Management, d. Unique numbers assigned to Form-1070 e. NCRs generated for any Form-1070 issued outside of the SPM validation process or DQO reconciliation process; noncompliant items, WMC changes, or HWN changes affecting approved WSPF. f. All changes to AK records are recorded. g. Completed Form-1070 is signed.				MP-TRUW-8.13
12	3.2.2, 3.2.2,4, 3.7.3, 3.7.4	Verify Form-1784, *Acceptable Knowledge Discrepancy Report,* was completed for discrepancies identified between AK source documents, pertinent information is included as defined within the procedure, and Form-1068 is filled out for the DR.				MP-TRUW-8.13
		Evaluation of Characterization Data and Waste Stream Profile Finalization				

Report Number: IA-14-002

Item No.	Section	Requirements	Sat	Unsat.	N/A	Verification Conducted
13	3.8	Verify characterization data are evaluated for the addition of potential HWNs, in accordance with procedure. Ensure the following: a. Form-1070 is used to document HWN assignment changes for a waste stream b. Form-1784 is used to document conservative HWN assignment changes for a waste stream c. Evaluation results are documented on Form-1187, *Waste Stream Profile HWN Assignment Worksheet* d. AK summary report are updated to reflect HWN additions e. NCRs and AKRs are generated, as required f. Form-1067 is completed, as required g. New Waste Stream Profile is completed, as required				MP-TRUW-8.13
		Accuracy Assessments				
14	3.9	Verify that AKE accesses accuracy of HWN and WMC assignments, and determines radioisotopic content by AK on an annual basis. Ensure the assessments are documented in a summary letter.			X	MP-TRUW-8.13
15	3.7, 3.8.1	Verify documentation of differences between EPA HWN assignments by AK and HWNs identified on characterization data: - assumptions for additional HWNs should be documented on a Discrepancy Report - % accuracy should be calculated			X	MP-TRUW-8.13
16	3.8.2	Verify documentation of differences between WMC assignments by AK and WMCs identified on characterization data: - corresponding IDC changes should also be documented - % accuracy should be calculated			X	MP-TRUW-8.13
17	3.8.3	Verify documentation of differences between radionuclides identified by AK and radionuclides measured by NDA: -% accuracy should be calculated			X	MP-TRUW-8.13
		Records Management				
18	3.10	Verify AK sufficiency determination requests, controlled documents, and internal assessments or external audits results are prepared, revised, and/or maintained as procedurally required.				MP-TRUW-8.13

AK21

Idaho Treatment Group

Idaho Treatment Group, LLC • 850 Energy Drive, Suite 100 • Idaho Falls, ID 83401-1502 • t: 1.208.557.7301 • f: 1.208.557.0963

To: George Byram, TRU Programs Manager/Alternate Site Project Manager
Steve Carpenter, Acceptable Knowledge Manager/Alternate Site Project Manager
Eric Schweinsberg, Site Project Manager

From: Randall C. Morris, Ph.D., Acceptable Knowledge Expert RCM

Date: September 18, 2014

Re: Acceptable Knowledge Accuracy Assessment for July 1, 2013 to June 30, 2014 – RCM-006-14

This memorandum transmits the Advanced Mixed Waste Treatment Project's Acceptable Knowledge accuracy assessment for the reporting period of July 1, 2013 through June 30, 2014.

RCM/at

Attachments

1. Acceptable Knowledge Accuracy Assessment by Waste Stream Profile for July 1, 2013 to June 30, 2014
2. Acceptable Knowledge Accuracy Assessment by Waste Generator for July 1, 2013 to June 30, 2014

cc: Dan Arrenholz
Caralea Hinkle-Daniel
Angie Morse
Lyle Ryman
Gina Tedford
Joe Velasquez
Tim Venneman
AMWTP Correspondence Control

Attachment 1 – Acceptable Knowledge Accuracy Assessment by Waste Stream Profile for July 1, 2013 to June 30, 2014
September 18, 2014
RCM-006-14

ACCEPTABLE KNOWLEDGE ACCURACY ASSESSMENT
BY WASTE STREAM PROFILE
FOR JULY 1, 2013 TO JUNE 30, 2014

This acceptable knowledge (AK) accuracy assessment has been prepared in accordance with MP-TRUW-8.13, Collection, Review, and Management of Acceptable Knowledge Documentation. The waste analysis plan (WAP) requires that accuracy of initial waste matrix code (WMC) and hazardous waste number (HWN) assignments be evaluated. The Waste Isolation Pilot Plant (WIPP) waste acceptance criteria (WAC) also require that the accuracy of AK-assigned radioisotopic contents is evaluated and that discrepancies identified during waste confirmation are reported as a measure of AK accuracy. The results of these evaluations are presented below in tabular form, organized by waste stream profile (WSP).

The AK accuracy assessment is based on data obtained from the AMWTP Waste Tracking System (WTS), the WIPP Waste Data System (WDS) and from information obtained from the AK record for the reporting period of July 1, 2013 to June 30, 2014 [e.g. acceptable knowledge resolutions (AKRs)]. Only containers which are associated with approved waste stream profiles and which were validated through the site project manager (SPM) level during the reporting period are included in the assessment.

Special Note Concerning the BN510.1, BN510.2, and BN510.3 Waste Streams
Container counts and any discrepancies with respect to the physical or radioisotopic contents of debris feed waste containers are associated with the IDCs of the containers at the time of site project manager (SPM) validation. IDCs are then correlated to their associated waste streams for reporting.

Waste Stream Profile BN510.1 was replaced with WSP BN510.2 and then with BN510.3 due to changes in authorized feedstock and the addition of new HWNs into the supercompacted debris waste stream. All debris containers validated during the reporting period have been reported as BN510.3 containers for the purpose of WMC/WSP and radioisotopic accuracy assessments. In the case of HWN and certification accuracy, it is possible to separate the three waste streams because the final shipped container is the container of concern for these assessments.

Accuracy Evaluation of AK HWN Assignment

A summary of the accuracy of HWN assignments identified for WIPP-approved Advanced Mixed Waste Treatment Project (AMWTP) WSPs during the reporting period of July 1, 2013 through June 30, 2014 is presented in Table 1.

To determine HWN accuracy for the reporting period, the following approach was used.

1. WIPP-approved WSPs used during the reporting period were identified.
2. HWNs associated with WIPP-approved WSPs were identified.
3. The total number of containers used in the evaluation is the number of containers certified during the period of July 1, 2013 through June 30, 2014. These data were obtained from the WIPP WDS.
4. All acceptable knowledge resolutions (AKRs) written on containers certified during the reporting period were reviewed to correlate HWN changes for WSPs.

The overall percent accuracy of AK HWN assignment for the reporting period is 100%.

Table 1. Accuracy of AK HWN Assignment by WSP.

WSP Number	AK-Assigned HWNs	Characterization-Assigned HWNs	HWN Difference	HWNs in WSP	Certified Containers	% Accuracy
BN510.1	F001, F002, F004, F005, F006, F007, F009, D004, D005, D006, D007, D008, D009, D010, D011, D022, D027, D028, D029, D030, D034, D037, D043	F001, F002, F004, F005, F006, F007, F009, D004, D005, D006, D007, D008, D009, D010, D011, D022, D027, D028, D029, D030, D034, D037, D043	0	23	531	100%
BN510.2	F001, F002, F004, F005, F006, F007, F009, D004, D005, D006, D007, D008, D009, D010, D011, D022, D027, D028, D029, D030, D032, D034, D037, D043	F001, F002, F004, F005, F006, F007, F009, D004, D005, D006, D007, D008, D009, D010, D011, D022, D027, D028, D029, D030, D032, D034, D037, D043	0	24	203	100%
BN510.3	F001, F002, F004, F005, F006, F007, F009, D004, D005, D006, D007, D008, D009, D010, D011, D022, D027, D028, D029, D030, D032, D033, D034, D037, D043	F001, F002, F004, F005, F006, F007, F009, D004, D005, D006, D007, D008, D009, D010, D011, D022, D027, D028, D029, D030, D032, D033, D034, D037, D043	0	25	605	100%
BN600	D004, D005, D006, D007, D008, D009, D010, D011, D022, D027, D028, D029, D030, D032, D034, D037, D043, F001, F002, F004, F005, F006, F007, F009	D004, D005, D006, D007, D008, D009, D010, D011, D022, D027, D028, D029, D030, D032, D034, D037, D043, F001, F002, F004, F005, F006, F007, F009	0	24	0	100%
BN004	F001, F002, F005, F006, F007, F009, D006, D007, D008, D011, D029	F001, F002, F005, F006, F007, F009, D006, D007, D008, D011, D029	0	11	55	100%
BN222	F001, F002, F005, F006, F007, F009, D004, D005, D006, D007, D008, D009, D010, D011, D022	F001, F002, F005, F006, F007, F009, D004, D005, D006, D007, D008, D009, D010, D011, D022	0	15	44	100%
BNINW216	F001, F002, F003, F005, F006, F007, F009, D004, D005, D006, D007, D008, D009, D010, D011, D022	F001, F002, F003, F005, F006, F007, F009, D004, D005, D006, D007, D008, D009, D010, D011, D022	0	16	1,022	100%

WSP Number	AK-Assigned HWNs	Characterization-Assigned HWNs	HWN Difference	HWNs in WSP	Certified Containers	% Accuracy
BNINW218	F001, F002, F005, F006, F007, F009, D006, D007, D008, D009, D010, D011, D032	F001, F002, F005, F006, F007, F009, D006, D007, D008, D009, D010, D011, D032	0	13	122	100%
BN835	F001, F002, D007, D008, D009	F001, F002, D007, D008, D009	0	5	6	100%
BN836	F001, F002, F005, D004, D005, D006, D007, D008, D009, D010, D011	F001, F002, F005, D004, D005, D006, D007, D008, D009, D010, D011	0	11	31	100%
Total for all approved WSPs			**0**		**2,619**	**100%**
Overall HWN Assignment % Accuracy					**100%**	

a. HWNs are based on the HWNs identified for the initial development of WSPs (i.e., within the initial AK summary report document). Once a WSP is WIPP-approved, the HWNs are based on those HWNs identified within the WIPP-approved WSP at the beginning of the reporting period.

b. Number of certified containers from 7/1/13 to 6/30/14. The data were obtained from the WIPP WDS.

Accuracy Evaluation of AK Radioisotopic Content Assignment

A summary of the accuracy of AK radioisotopic content assignment for WIPP-approved AMWTP WSPs during the reporting period of July 1, 2013 through June 30, 2014 is presented in Table 2. This table includes the number of containers for each WSP and IDC that was validated through the SPM level for nondestructive assay examinations during the reporting period. These data were obtained from the AMWTP WTS. Because data generated from non-destructive assay of debris waste boxes is not validated through SPM level, debris waste boxes are not included in Table 2. However, IDC BN-508 represents the containers generated from these boxes in the Treatment Facility.

As part of the overall radioisotopic accuracy evaluation, all AKRs written on containers validated during the reporting period were reviewed to correlate discrepancies between the AK-assigned radioisotopic content and the radioisotopic content found during characterization activities at the AMWTP.

The overall percent accuracy of AK radioisotopic content assignment for the reporting period is 100%.

Table 2. Accuracy of AK Radioisotopic Content Assignment by WSP.

WSP Number	IDC	SPM-Validated Containers	AKR Number	Containers affected by AKR	% Accuracy
BN510.3	AE-100	3	N/A	0	100%
	AE-101	0	N/A	0	N/A
	AE-104	4	N/A	0	100%
	AE-106	0	N/A	0	N/A
	AE-110	0	N/A	0	N/A
	AE-120	0	N/A	0	N/A
	AW-150	119	N/A	0	100%
	AW-160	53	N/A	0	100%
	AW-161	2	N/A	0	100%
	AW-162	66	N/A	0	100%
	AW-163	2	N/A	0	100%
	AW-164	265	N/A	0	100%
	AW-165	1	N/A	0	100%
	AW-167	111	N/A	0	100%
	BC-201	1	N/A	0	100%
	BC-202	0	N/A	0	N/A
	BN-508	7581	N/A	0	100%
	LA-007	0	N/A	0	N/A
	LA-009	0	N/A	0	N/A
	LA-010	0	N/A	0	N/A
	MD-801	1	N/A	0	100%
	MD-802	3	N/A	0	100%
	MD-803	8	N/A	0	100%
	MD-804	12	N/A	0	100%
	MD-805	2	N/A	0	100%
	MD-810	0	N/A	0	N/A
	MD-813	0	N/A	0	N/A
	MD-814	0	N/A	0	N/A
	MD-824	0	N/A	0	N/A
	MD-825	9	N/A	0	100%
	MD-826	0	N/A	0	N/A
	MD-827	0	N/A	0	N/A
	MD-838	0	N/A	0	N/A
	MD-847	56	N/A	0	100%
	MD-848	4	N/A	0	100%
	RF-010	0	N/A	0	N/A
	RF-020	0	N/A	0	N/A
	RF-030	0	N/A	0	N/A
	RF-040	0	N/A	0	N/A
	RF-050	0	N/A	0	N/A
	RF-060	0	N/A	0	N/A
	RF-070	0	N/A	0	N/A
	RF-241	20	N/A	0	100%
	RF-300	28	N/A	0	100%
	RF-301	0	N/A	0	N/A

WSP Number	IDC	SPM-Validated Containers	AKR Number	Containers affected by AKR	% Accuracy
	RF-302	1	N/A	0	100%
	RF-303	0	N/A	0	N/A
	RF-310	0	N/A	0	N/A
	RF-312	0	N/A	0	N/A
	RF-320	9	N/A	0	100%
	RF-321	0	N/A	0	N/A
	RF-328	0	N/A	0	N/A
	RF-330	170	N/A	0	100%
	RF-335	1	N/A	0	100%
	RF-336	235	N/A	0	100%
	RF-337	113	N/A	0	100%
	RF-338	4	N/A	0	100%
	RF-339	3	N/A	0	100%
	RF-33A	0	N/A	0	N/A
	RF-33B	0	N/A	0	N/A
	RF-360	13	N/A	0	100%
	RF-368	1	N/A	0	100%
	RF-370	0	N/A	0	N/A
	RF-371	41	N/A	0	100%
	RF-372	4	N/A	0	100%
	RF-374	156	N/A	0	100%
	RF-376	19	N/A	0	100%
	RF-377	0	N/A	0	N/A
	RF-391	2	N/A	0	100%
	RF-392	0	N/A	0	N/A
	RF-416	2	N/A	0	100%
	RF-430	7	N/A	0	100%
	RF-431	1	N/A	0	100%
	RF-440	21	N/A	0	100%
	RF-441	24	N/A	0	100%
	RF-442	20	N/A	0	100%
	RF-44A	0	N/A	0	N/A
	RF-460	0	N/A	0	N/A
	RF-463	7	N/A	0	100%
	RF-464	1	N/A	0	100%
	RF-480	77	N/A	0	100%
	RF-481	7	N/A	0	100%
	RF-488	0	N/A	0	N/A
	RF-48A	0	N/A	0	N/A
	RF-490	4	N/A	0	100%
	RF-491	0	N/A	0	N/A
	RF-750	1111	N/A	0	100%
	RF-760	844	N/A	0	100%
	RF-831	0	N/A	0	N/A
	RF-832	0	N/A	0	N/A
	RF-833	0	N/A	0	N/A
	RF-900	70	N/A	0	100%
	RF-950	22	N/A	0	100%
	RF-960	116	N/A	0	100%

WSP Number	IDC	SPM-Validated Containers	AKR Number	Containers affected by AKR	% Accuracy
	RF-970	4	N/A	0	100%
	SD-177	312	N/A	0	100%
Subtotal AMWTP WSP BN510.3 (No IDC BN-508)		**4,192**		**0**	**100.00%**
Total AMWTP WSP BN510.3		**11,773**		**0**	**100.00%**
BN004	RF-004	77	N/A	0	100%
	RF-744	6	N/A	0	100%
	RF-802	0	N/A	0	N/A
Total AMWTP WSP BN004		**83**		**0**	**100.00%**
BN222	RF-292	14	N/A	0	100%
	RF-696	1	N/A	0	100%
	RF-818	0	N/A	0	N/A
	RF-820	1	N/A	0	100%
Total AMWTP WSP BN222		**16**		**0**	**100.00%**
BNINW216	RF-001	179	N/A	0	100%
	RF-002	765	376	1 [a]	100%
	RF-741	43	N/A	0	100%
	RF-742	45	N/A	0	100%
	RF-800	2	N/A	0	100%
Total AMWTP WSP BNINW216		**1,034**		**0**	**100.00%**
BNINW218	RF-007	17	N/A	0	100%
	RF-803	0	N/A	0	N/A
	RF-807	4	N/A	0	100%
Total AMWTP WSP BNINW218		**21**		**0**	**100.00%**
BN835	MD-834	4	N/A	0	100%
	MD-835	6	N/A	0	100%
Total AMWTP WSP BN835		**10**		**0**	**100.00%**
BN836	MD-836	42	N/A	0	100%
Total AMWTP WSP BN836		**42**		**0**	**100.00%**
Subtotal (No IDC BN-508)		**5,398**		**1 [a]**	**100.00%**
Overall Total		**12,979**		**1 [a]**	**100.00%**

a. This is not considered an inaccuracy because ^{137}Cs was identified in the AK record as a potential contaminant for the RF IDC 002 waste.

Accuracy Evaluation of AK WMC and WSP Assignment

The WMC or WSP changes that were identified during the reporting period are summarized in Table 3.

The total number of RTR/VE SPM-validated containers for the reporting period of July 1, 2013 through June 30, 2014 was obtained from the AMWTP WTS. The WTS database also tracks IDC, WMC and waste stream changes. WTS data were used to obtain container counts relating to IDC, WMC or waste stream changes within the reporting period. Only validated containers associated with a WIPP-approved AMWTP Waste Stream Profile Form (by IDC) were used in the accuracy calculation. Because data generated from RTR of debris waste boxes is not validated through SPM level, debris waste boxes are not included in Table 3; IDC BN-508 represents the containers generated from these boxes in the Treatment Facility. The overall percent accuracy for WMC or WSP assignments for the reporting period is 99.2%.

Table 3. Accuracy of AK WMC and WSP Assignment by WSP.

WSP Number	IDC	WMC	Validated Containers Examined	AKR No(s)./ RVU	IDC Changed Containers	IDC % Accuracy	WMC/WS Changed Containers	WMC/WS% Accuracy
BN510.3	AE-100	S5400	1	N/A	0	100%	0	100%
	AE-101	S5400	0	N/A	0	N/A	0	N/A
	AE-104	S5400	3	N/A	0	100%	0	100%
	AE-106	S5400	0	N/A	0	N/A	0	N/A
	AE-110	S5400	0	N/A	0	N/A	0	N/A
	AE-120	S5400	0	N/A	0	N/A	0	N/A
	AW-150	S5490	85	N/A	0	100%	0	100%
	AW-160	S5490	56	N/A	0	100%	0	100%
	AW-161	S5490	4	N/A	0	100%	0	100%
	AW-162	S5490	26	780, 788	2	92%	0	100%
	AW-163	S5490	5	N/A	0	100%	0	100%
	AW-164	S5490	181	N/A	0	100%	0	100%
	AW-165	S5490	1	N/A	0	100%	0	100%
	AW-167	S5490	82	N/A	0	100%	0	100%
	BC-201	S5490	0	N/A	0	N/A	0	N/A
	BC-202	S5490	0	N/A	0	N/A	0	N/A
	BN-508	S5490	5644	N/A	0	100%	0	100%
	LA-007	S5400	0	N/A	0	N/A	0	N/A
	LA-009	S5400	0	N/A	0	N/A	0	N/A
	LA-010	S5400	0	N/A	0	N/A	0	N/A
	MD-801	S5490	0	N/A	0	N/A	0	N/A
	MD-802	S5490	0	N/A	0	N/A	0	N/A
	MD-803	S5490	1	N/A	0	100%	0	100%
	MD-804	S5490	0	N/A	0	N/A	0	N/A
	MD-805	S5490	0	N/A	0	N/A	0	N/A
	MD-810	S5490	0	N/A	0	N/A	0	N/A
	MD-813	S5490	0	N/A	0	N/A	0	N/A
	MD-814	S5490	0	N/A	0	N/A	0	N/A
	MD-824	S5490	0	N/A	0	N/A	0	N/A
	MD-825	S5490	0	N/A	0	N/A	0	N/A
	MD-826	S5490	0	N/A	0	N/A	0	N/A
	MD-827	S5490	0	N/A	0	N/A	0	N/A
	MD-838	S5490	0	N/A	0	N/A	0	N/A
	MD-847	S5490	3	N/A	0	100%	0	100%

WSP Number	IDC	WMC	Validated Containers Examined	AKR No(s)./ RVU	IDC Changed Containers	IDC % Accuracy	WMC/WS Changed Containers	WMC/WS% Accuracy
	MD-848	S5490	2	745, 816	2	0%	2	0%
	RF-010	S5300	0	N/A	0	N/A	0	N/A
	RF-020	S5300	0	N/A	0	N/A	0	N/A
	RF-030	S5300	0	N/A	0	N/A	0	N/A
	RF-040	S5311	0	N/A	0	N/A	0	N/A
	RF-050	S5112	0	N/A	0	N/A	0	N/A
	RF-060	S5112	0	N/A	0	N/A	0	N/A
	RF-070	S5126	0	N/A	0	N/A	0	N/A
	RF-241	S5490	7	N/A	0	100%	0	100%
	RF-300	S5126	6	N/A	0	100%	0	100%
	RF-301	S5126	0	N/A	0	N/A	0	N/A
	RF-302	S5300	0	N/A	0	N/A	0	N/A
	RF-303	S5126	0	N/A	0	N/A	0	N/A
	RF-310	S5126	0	N/A	0	N/A	0	N/A
	RF-312	S5126	0	N/A	0	N/A	0	N/A
	RF-320	S5112	3	N/A	0	100%	0	100%
	RF-321	S5112	0	N/A	0	N/A	0	N/A
	RF-328	S5410	0	N/A	0	N/A	0	N/A
	RF-330	S5300	57	682, 763, 771	3	95%	3	95%
	RF-335	S5410	2	789	1	50%	1	50%
	RF-336	S5300	72	781	1	99%	1	99%
	RF-337	S5300	33	N/A	0	100%	0	100%
	RF-338	S5410	1	N/A	0	100%	0	100%
	RF-339	S5311	0	N/A	0	N/A	0	N/A
	RF-33A	S5300	0	N/A	0	N/A	0	N/A
	RF-33B	S5300	0	N/A	0	N/A	0	N/A
	RF-360	S5410	3	N/A	0	100%	0	100%
	RF-368	S5190	1	N/A	0	100%	0	100%
	RF-370	S5190	4	684, RVU	3	25%	3	25%
	RF-371	S5123	27	690, 760, 762, 765, 768, 791, 792, 806, 813	10	63%	10	63%
	RF-372	S5490	1	N/A	0	100%	0	100%
	RF-374	S5490	119	772, 798, 799	9	92%	9	92%
	RF-376	S5410	16	N/A	0	100%	0	100%
	RF-377	S5123	0	N/A	0	N/A	0	N/A

WSP Number	IDC	WMC	Validated Containers Examined	AKR No(s)./ RVU	IDC Changed Containers	IDC % Accuracy	WMC/WS Changed Containers	WMC/WS% Accuracy
	RF-391	S5190	0	N/A	0	N/A	0	N/A
	RF-392	S5190	0	N/A	0	N/A	0	N/A
	RF-416	S5111	1	N/A	0	100%	0	100%
	RF-430	S5390	3	N/A	0	100%	0	100%
	RF-431	S5390	0	N/A	0	N/A	0	N/A
	RF-440	S5122	15	642, 664, 802	3	80%	3	80%
	RF-441	S5100	3	N/A	0	100%	0	100%
	RF-442	S5100	11	N/A	0	100%	0	100%
	RF-44A	S5122	0	N/A	0	N/A	0	N/A
	RF-460	S5390	0	N/A	0	N/A	0	N/A
	RF-463	S5311	6	N/A	0	100%	0	100%
	RF-464	S5300	0	N/A	0	N/A	0	N/A
	RF-480	S5112	40	744, 793, 804	4	90%	4	90%
	RF-481	S5112	3	N/A	0	100%	0	100%
	RF-488	S5122	0	N/A	0	N/A	0	N/A
	RF-48A	S5112	0	N/A	0	N/A	0	N/A
	RF-490	S5410	3	N/A	0	100%	0	100%
	RF-491	S5410	0	N/A	0	N/A	0	N/A
	RF-750	S5490	415	RVU	13	97%	10	98%
	RF-760	S5490	35	N/A	0	100%	0	100%
	RF-831	S5300	0	N/A	0	N/A	0	N/A
	RF-832	S5300	0	N/A	0	N/A	0	N/A
	RF-833	S5300	0	N/A	0	N/A	0	N/A
	RF-900	S5390	17	598, 603, 832	4	76%	4	76%
	RF-950	S5490	9	N/A	0	100%	0	100%
	RF-960	S5490	31	756	1	97%	1	97%
	RF-970	S5320	2	N/A	0	100%	0	100%
	SD-177	S5490	3	N/A	0	100%	0	100%
Subtotal AMWTP WSP BN510.3 (No IDC BN-508)			**1,399**		**56**	**96.0%**	**51**	**96.4%**
Total AMWTP WSP BN510.3			**6,998**		**55**	**99.2%**	**50**	**99.3%**

WSP Number	IDC	WMC	Validated Containers Examined	AKR No(s)./ RVU	IDC Changed Containers	IDC % Accuracy	WMC/WS Changed Containers	WMC/WS% Accuracy
BN004	RF-004	S3150	28	582, 820	3	89%	3	89%
	RF-744	S3150	2	N/A	0	100%	0	100%
	RF-802	S3150	0	N/A	0	N/A	0	N/A
Total AMWTP WSP BN004			**30**		**3**	**90.0%**	**3**	**90.0%**
BN222	RF-292	S3150	7	828	1	86%	1	86%
	RF-696	S3150	0	N/A	0	N/A	0	N/A
	RF-818	S3150	0	N/A	0	N/A	0	N/A
	RF-820	S3150	0	N/A	0	N/A	0	N/A
Total AMWTP WSP BN222			**7**		**1**	**85.7%**	**1**	**85.7%**
BNINW216	RF-001	S3121	65	779, 807	2	97%	2	97%
	RF-002	S3121	143	715	1	99%	1	99%
	RF-741	S3121	19	N/A	0	100%	0	100%
	RF-742	S3121	25	825, RVU	2	92%	1	96%
	RF-800	S3150	2	N/A	0	100%	0	100%
Total AMWTP WSP BNINW216			**254**		**5**	**98.0%**	**4**	**98.4%**
BNINW218	RF-007	S3121	3	N/A	0	100%	0	100%
	RF-803	S3150	0	N/A	0	N/A	0	N/A
	RF-807	S3121	1	N/A	0	100%	0	100%
Total AMWTP WSP BNINW218			**4**		**0**	**100%**	**0**	**100%**
BN835	MD-834	S3113	1	N/A	0	100%	0	100%
	MD-835	S3113	6	N/A	0	100%	0	100%
Total AMWTP WSP BN835			**7**		**0**	**100%**	**0**	**100%**
BN836	MD-836	S3121	23	N/A	0	100%	0	100%
Total AMWTP WSP BN836			**23**		**0**	**100%**	**0**	**100%**
Subtotal for all approved WSPs (no IDC BN-508)			**1,724**		**65**	**96.2%**	**59**	**96.6%**
Totals for all approved WSPs			**7,323**		**64**	**99.1%**	**58**	**99.2%**

Accuracy Evaluation of WIPP-Certified Containers

The accuracy for AMWTP WIPP-certified containers during the reporting period is summarized in Table 4.

The number of containers certified for shipment by the AMWTP to WIPP during the reporting period of July 1, 2013 through June 30, 2014 was obtained from the WIPP WDS. All AMWTP WIPP-certified containers were confirmed by the WIPP confirmation team members.

The overall percent accuracy for AMWTP WIPP-certified containers for the reporting period is 100%.

Table 4. Accuracy of AMWTP WIPP-Certified Containers by WSP.

WSP Number	Certified Containers	Confirmation-Failed Containers	Confirmation % Accuracy
BN510.1	531	0	100%
BN510.2	203	0	100%
BN510.3	605	0	100%
BN600	0	0	100%
BN004	55	0	100%
BN222	44	0	100%
BNINW216	1022	0	100%
BNINW218	122	0	100%
BN835	6	0	100%
BN836	31	0	100%
Overall TOTAL	**2619**	**0**	**100%**

ACCEPTABLE KNOWLEDGE ACCURACY ASSESSMENT
BY WASTE GENERATOR
FOR JULY 1, 2013 TO JUNE 30, 2014

This acceptable knowledge (AK) accuracy assessment has been prepared in accordance with MP-TRUW-8.13, Collection, Review, and Management of Acceptable Knowledge Documentation. The waste analysis plan (WAP) requires that accuracy of initial waste matrix code (WMC) and hazardous waste number (HWN) assignments be evaluated. The Waste Isolation Pilot Plant (WIPP) waste acceptance criteria (WAC) also requires that the accuracy of AK-assigned radioisotopic contents is evaluated and that discrepancies identified during waste confirmation are reported as a measure of AK accuracy. The results of these evaluations are presented below in tabular form, organized by waste generation site.

The overall percent accuracy of AK HWN assignment for all generators is 100%.
The overall percent accuracy of AK radioisotopic content assignment for all generators is 100%.
The overall percent accuracy for Waste Matrix Code (WMC) or Waste Stream Profile (WSP) assignments for all generators is 99.2%.
The overall percent accuracy for Advanced Mixed Waste Treatment Project (AMWTP) WIPP-certified containers for all generators is 100%.

Special Note Concerning the BN510.1, BN510.2, and BN510.3 Waste Streams
Container counts and any discrepancies with respect to the physical or radioisotopic contents of debris feed waste containers are associated with the IDCs of the containers at the time of site project manager (SPM) validation. IDCs are then correlated to their associated waste streams for reporting.

Waste Stream Profile BN510.1 was replaced with BN510.2 and then with BN510.3 due to changes in authorized feedstock and the addition of new HWNs into the supercompacted debris waste stream. All debris containers validated during the reporting period have been reported as BN510.3 containers for the purpose of WMC/WSP and radioisotopic accuracy assessments. In the case of HWN and certification accuracy, it is possible to separate the three waste streams because the final shipped container is the container of concern for these assessments.

Table 1. Accuracy of AK HWN Assignment by Generator.

WSP Number	AK-Assigned HWNs	Characterization-Assigned HWNs	HWN Difference	HWNs in WSP	Certified Containers	% Accuracy
BN510.1	F001, F002, F004, F005, F006, F007, F009, D004, D005, D006, D007, D008, D009, D010, D011, D022, D027, D028, D029, D030, D034, D037, D043	F001, F002, F004, F005, F006, F007, F009, D004, D005, D006, D007, D008, D009, D010, D011, D022, D027, D028, D029, D030, D034, D037, D043	0	23	531	100%
BN510.2	F001, F002, F004, F005, F006, F007, F009, D004, D005, D006, D007, D008, D009, D010, D011, D022, D027, D028, D029, D030, D032, D034, D037, D043	F001, F002, F004, F005, F006, F007, F009, D004, D005, D006, D007, D008, D009, D010, D011, D022, D027, D028, D029, D030, D032, D034, D037, D043	0	24	203	100%
BN510.3	F001, F002, F004, F005, F006, F007, F009, D004, D005, D006, D007, D008, D009, D010, D011, D022, D027, D028, D029, D030, D032, D033, D034, D037, D043	F001, F002, F004, F005, F006, F007, F009, D004, D005, D006, D007, D008, D009, D010, D011, D022, D027, D028, D029, D030, D032, D033, D034, D037, D043	0	25	605	100%
BN600	D004, D005, D006, D007, D008, D009, D010, D011, D022, D027, D028, D029, D030, D032, D034, D037, D043, F001, F002, F004, F005, F006, F007, F009	D004, D005, D006, D007, D008, D009, D010, D011, D022, D027, D028, D029, D030, D032, D034, D037, D043, F001, F002, F004, F005, F006, F007, F009	0	24	0	100%
Total for all AMWTP IDCs			**0**		**1,339**	**100%**
BN004	F001, F002, F005, F006, F007, F009, D006, D007, D008, D011, D029	F001, F002, F005, F006, F007, F009, D006, D007, D008, D011, D029	0	11	55	100%
BN222	F001, F002, F005, F006, F007, F009, D004, D005, D006, D007, D008, D009, D010, D011, D022	F001, F002, F005, F006, F007, F009, D004, D005, D006, D007, D008, D009, D010, D011, D022	0	15	44	100%

WSP Number	AK-Assigned HWNs	Characterization-Assigned HWNs	HWN Difference	HWNs in WSP	Certified Containers	% Accuracy
BNINW216	F001, F002, F003, F005, F006, F007, F009, D004, D005, D006, D007, D008, D009, D010, D011, D022	F001, F002, F003, F005, F006, F007, F009, D004, D005, D006, D007, D008, D009, D010, D011, D022	0	16	1,022	100%
BNINW218	F001, F002, F005, F006, F007, F009, D006, D007, D008, D009, D010, D011, D032	F001, F002, F005, F006, F007, F009, D006, D007, D008, D009, D010, D011, D032	0	13	122	100%
Total for all Rocky Flats IDCs			**0**		**1,243**	**100%**
BN835	F001, F002, D007, D008, D009	F001, F002, D007, D008, D009	0	5	6	100%
BN836	F001, F002, F005, D004, D005, D006, D007, D008, D009, D010, D011	F001, F002, F005, D004, D005, D006, D007, D008, D009, D010, D011	0	11	31	100%
Total for all Mound IDCs			**0**		**37**	**100%**
Overall Total			**0**		**2619**	**100%**

Table 2. Accuracy of AK Radioisotopic Content Assignment by Generator.

Generator	IDC	SPM-Validated Containers	AKR Number	Containers affected by AKR	% Accuracy
AMWTP	BN-508	7581	N/A	0	100%
	BN-600	118	N/A	0	100%
Total AMWTP IDCs		**7699**		**0**	**100%**
Rocky Flats	RF-001	179	N/A	0	100%
	RF-002	765	376	1 [a]	100%
	RF-004	77	N/A	0	100%
	RF-007	17	N/A	0	100%
	RF-010	0	N/A	0	N/A
	RF-020	0	N/A	0	N/A
	RF-030	0	N/A	0	N/A
	RF-040	0	N/A	0	N/A
	RF-050	0	N/A	0	N/A
	RF-060	0	N/A	0	N/A
	RF-070	0	N/A	0	N/A
	RF-241	20	N/A	0	100%
	RF-292	14	N/A	0	100%
	RF-300	28	N/A	0	100%
	RF-301	0	N/A	0	N/A
	RF-302	1	N/A	0	100%
	RF-303	0	N/A	0	N/A
	RF-310	0	N/A	0	N/A
	RF-312	0	N/A	0	N/A
	RF-320	9	N/A	0	100%
	RF-321	0	N/A	0	N/A
	RF-328	0	N/A	0	N/A
	RF-330	170	N/A	0	100%
	RF-335	1	N/A	0	100%
	RF-336	235	N/A	0	100%
	RF-337	113	N/A	0	100%
	RF-338	4	N/A	0	100%
	RF-339	3	N/A	0	100%
	RF-33A	0	N/A	0	N/A
	RF-33B	0	N/A	0	N/A
	RF-360	13	N/A	0	100%
	RF-368	1	N/A	0	100%
	RF-370	0	N/A	0	N/A
	RF-371	41	N/A	0	100%
	RF-372	4	N/A	0	100%
	RF-374	156	N/A	0	100%
	RF-376	19	N/A	0	100%
	RF-377	0	N/A	0	N/A
	RF-391	2	N/A	0	100%
	RF-392	0	N/A	0	N/A
	RF-416	2	N/A	0	100%
	RF-430	7	N/A	0	100%

Generator	IDC	SPM-Validated Containers	AKR Number	Containers affected by AKR	% Accuracy
	RF-431	1	N/A	0	100%
	RF-440	21	N/A	0	100%
	RF-441	24	N/A	0	100%
	RF-442	20	N/A	0	100%
	RF-44A	0	N/A	0	N/A
	RF-460	0	N/A	0	N/A
	RF-463	7	N/A	0	100%
	RF-464	1	N/A	0	100%
	RF-480	77	N/A	0	100%
	RF-481	7	N/A	0	100%
	RF-488	0	N/A	0	N/A
	RF-48A	0	N/A	0	N/A
	RF-490	4	N/A	0	100%
	RF-491	0	N/A	0	N/A
	RF-696	1	N/A	0	100%
	RF-741	43	N/A	0	100%
	RF-742	45	N/A	0	100%
	RF-744	6	N/A	0	100%
	RF-750	1111	N/A	0	100%
	RF-760	844	N/A	0	100%
	RF-800	2	N/A	0	100%
	RF-802	0	N/A	0	N/A
	RF-803	0	N/A	0	N/A
	RF-807	4	N/A	0	100%
	RF-818	0	N/A	0	N/A
	RF-820	1	N/A	0	100%
	RF-831	0	N/A	0	N/A
	RF-832	0	N/A	0	N/A
	RF-833	0	N/A	0	N/A
	RF-900	70	N/A	0	100%
	RF-950	22	N/A	0	100%
	RF-960	116	N/A	0	100%
	RF-970	4	N/A	0	100%
Total Rocky Flats IDCs		**4,312**		**0**	**100%**
Mound	MD-801	1	N/A	0	100%
	MD-802	3	N/A	0	100%
	MD-803	8	N/A	0	100%
	MD-804	12	N/A	0	100%
	MD-805	2	N/A	0	100%
	MD-810	0	N/A	0	N/A
	MD-813	0	N/A	0	N/A
	MD-814	0	N/A	0	N/A
	MD-824	0	N/A	0	N/A
	MD-825	9	N/A	0	100%
	MD-826	0	N/A	0	N/A
	MD-827	0	N/A	0	N/A

Generator	IDC	SPM-Validated Containers	AKR Number	Containers affected by AKR	% Accuracy
	MD-834	4	N/A	0	100%
	MD-835	6	N/A	0	100%
	MD-836	42	N/A	0	100%
	MD-838	0	N/A	0	N/A
	MD-847	56	N/A	0	100%
	MD-848	4	N/A	0	100%
Total Mound IDCs		**147**		**0**	**100%**
Battelle Columbus	BC-201	1	N/A	0	100%
	BC-202	0	N/A	0	N/A
Total BC IDCs		**1**		**0**	**100%**
Los Alamos	LA-007	0	N/A	0	N/A
	LA-009	0	N/A	0	N/A
	LA-010	0	N/A	0	N/A
Total Hanford IDCs		**0**		**0**	**N/A**
Argonne East	AE-100	3	N/A	0	100%
	AE-101	0	N/A	0	N/A
	AE-104	4	N/A	0	100%
	AE-106	0	N/A	0	N/A
	AE-110	0	N/A	0	N/A
	AE-120	0	N/A	0	N/A
Total Argonne East IDCs		**7**		**0**	**100%**
Materials and Fuels Complex	AW-150	119	N/A	0	100%
	AW-160	53	N/A	0	100%
	AW-161	2	N/A	0	100%
	AW-162	66	N/A	0	100%
	AW-163	2	N/A	0	100%
	AW-164	265	N/A	0	100%
	AW-165	1	N/A	0	100%
	AW-167	111	N/A	0	100%
Total Materials and Fuels Complex IDCs		**619**		**0**	**100%**
Subsurface Disposal Area	SD-177	312	N/A	0	100%
Total Subsurface Disposal Area IDCs		**312**		**0**	**100%**
Overall Total		**13,097**		**0**	**100%**

a. This is not considered an inaccuracy because ^{137}Cs was identified in the AK record as a potential contaminant for the RF IDC 002 waste.

Table 3. Accuracy of AK WMC and WSP Assignment by Generator.

Generator	IDC	WMC	Validated Containers Examined	AKR No(s)./ RVU	IDC Changed Containers	IDC % Accuracy	WMC/WS Changed Containers	WMC/WS% Accuracy
AMWTP	BN-508	S5490	5644	N/A	0	100%	0	100%
	BN-600	S5490	0	N/A	0	N/A	0	N/A
Total AMWTP IDCs			**5,644**		**0**	**100%**	**0**	**100%**
Rocky Flats	RF-001	S3121	65	779, 807	2	97%	2	97%
	RF-002	S3121	143	715	1	99%	1	99%
	RF-004	S3150	28	582, 820	3	89%	3	89%
	RF-007	S3121	3	N/A	0	100%	0	100%
	RF-010	S5300	0	N/A	0	N/A	0	N/A
	RF-020	S5300	0	N/A	0	N/A	0	N/A
	RF-030	S5300	0	N/A	0	N/A	0	N/A
	RF-040	S5311	0	N/A	0	N/A	0	N/A
	RF-050	S5112	0	N/A	0	N/A	0	N/A
	RF-060	S5112	0	N/A	0	N/A	0	N/A
	RF-070	S5126	0	N/A	0	N/A	0	N/A
	RF-241	S5490	7	N/A	0	100%	0	100%
	RF-292	S3150	7	828	1	86%	1	86%
	RF-300	S5126	6	N/A	0	100%	0	100%
	RF-301	S5126	0	N/A	0	N/A	0	N/A
	RF-302	S5300	0	N/A	0	N/A	0	N/A
	RF-303	S5126	0	N/A	0	N/A	0	N/A
	RF-310	S5126	0	N/A	0	N/A	0	N/A
	RF-312	S5126	0	N/A	0	N/A	0	N/A
	RF-320	S5112	3	N/A	0	100%	0	100%
	RF-321	S5112	0	N/A	0	N/A	0	N/A
	RF-328	S5410	0	N/A	0	N/A	0	N/A
	RF-330	S5300	57	682, 763, 771	3	95%	3	95%
	RF-335	S5410	2	789	1	50%	1	50%
	RF-336	S5300	72	781	1	99%	1	99%
	RF-337	S5300	33	N/A	0	100%	0	100%

Generator	IDC	WMC	Validated Containers Examined	AKR No(s)./ RVU	IDC Changed Containers	IDC % Accuracy	WMC/WS Changed Containers	WMC/WS% Accuracy
	RF-338	S5410	1	N/A	0	100%	0	100%
	RF-339	S5311	0	N/A	0	N/A	0	N/A
	RF-33A	S5300	0	N/A	0	N/A	0	N/A
	RF-33B	S5300	0	N/A	0	N/A	0	N/A
	RF-360	S5410	3	N/A	0	100%	0	100%
	RF-368	S5190	1	N/A	0	100%	0	100%
	RF-370	S5190	4	684, RVU	3	25%	3	25%
	RF-371	S5123	27	690, 760, 762, 765, 768, 791, 792, 806, 813	10	63%	10	63%
	RF-372	S5490	1	N/A	0	100%	0	100%
	RF-374	S5490	119	772, 798, 799	9	92%	9	92%
	RF-376	S5410	16	N/A	0	100%	0	100%
	RF-377	S5123	0	N/A	0	N/A	0	N/A
	RF-391	S5190	0	N/A	0	N/A	0	N/A
	RF-392	S5190	0	N/A	0	N/A	0	N/A
	RF-416	S5111	1	N/A	0	100%	0	100%
	RF-430	S5390	3	N/A	0	100%	0	100%
	RF-431	S5390	0	N/A	0	N/A	0	N/A
	RF-440	S5122	15	642, 664, 802	3	80%	3	80%
	RF-441	S5100	3	N/A	0	100%	0	100%
	RF-442	S5100	11	N/A	0	100%	0	100%
	RF-44A	S5122	0	N/A	0	N/A	0	N/A
	RF-460	S5390	0	N/A	0	N/A	0	N/A
	RF-463	S5311	6	N/A	0	100%	0	100%
	RF-464	S5300	0	N/A	0	N/A	0	N/A
	RF-480	S5112	40	744, 793, 804	4	90%	4	90%
	RF-481	S5112	3	N/A	0	100%	0	100%
	RF-488	S5122	0	N/A	0	N/A	0	N/A
	RF-48A	S5112	0	N/A	0	N/A	0	N/A
	RF-490	S5410	3	N/A	0	100%	0	100%

Generator	IDC	WMC	Validated Containers Examined	AKR No(s)./ RVU	IDC Changed Containers	IDC % Accuracy	WMC/WS Changed Containers	WMC/WS% Accuracy
	RF-491	S5410	0	N/A	0	N/A	0	N/A
	RF-696	S3150	0	N/A	0	N/A	0	N/A
	RF-741	S3121	19	N/A	0	100%	0	100%
	RF-742	S3121	25	825, RVU	2	92%	1	96%
	RF-744	S3150	2	N/A	0	100%	0	100%
	RF-750	S5490	415	RVU	13	97%	10	98%
	RF-760	S5490	35	N/A	0	100%	0	100%
	RF-800	S3150	2	N/A	0	100%	0	100%
	RF-802	S3150	0	N/A	0	N/A	0	N/A
	RF-803	S3150	0	N/A	0	N/A	0	N/A
	RF-807	S3121	1	N/A	0	100%	0	100%
	RF-818	S3150	0	N/A	0	N/A	0	N/A
	RF-820	S3150	0	N/A	0	N/A	0	N/A
	RF-831	S5300	0	N/A	0	N/A	0	N/A
	RF-832	S5300	0	N/A	0	N/A	0	N/A
	RF-833	S5300	0	N/A	0	N/A	0	N/A
	RF-900	S5390	17	598, 603, 603, 832	4	76%	4	76%
	RF-950	S5490	9	N/A	0	100%	0	100%
	RF-960	S5490	31	756	1	97%	1	97%
	RF-970	S5320	2	N/A	0	100%	0	100%
Total Rocky Flats IDCs			**1,241**		**61**	**95.1%**	**57**	**95.4%**
Mound	MD-801	S5490	0	N/A	0	N/A	0	N/A
	MD-802	S5490	0	N/A	0	N/A	0	N/A
	MD-803	S5490	1	N/A	0	100%	0	100%
	MD-804	S5490	0	N/A	0	N/A	0	N/A
	MD-805	S5490	0	N/A	0	N/A	0	N/A
	MD-810	S5490	0	N/A	0	N/A	0	N/A
	MD-813	S5490	0	N/A	0	N/A	0	N/A
	MD-814	S5490	0	N/A	0	N/A	0	N/A

Generator	IDC	WMC	Validated Containers Examined	AKR No(s)./ RVU	IDC Changed Containers	IDC % Accuracy	WMC/WS Changed Containers	WMC/WS% Accuracy
	MD-824	S5490	0	N/A	0	N/A	0	N/A
	MD-825	S5490	0	N/A	0	N/A	0	N/A
	MD-826	S5490	0	N/A	0	N/A	0	N/A
	MD-827	S5490	0	N/A	0	N/A	0	N/A
	MD-834	S3113	1	N/A	0	100%	0	100%
	MD-835	S3113	6	N/A	0	100%	0	100%
	MD-836	S3121	23	N/A	0	100%	0	100%
	MD-838	S5490	0	N/A	0	N/A	0	N/A
	MD-847	S5490	3	N/A	0	100%	0	100%
	MD-848	S5490	2	745, 816	2	0%	2	0%
Total Mound IDCs			**36**		**2**	**94.4%**	**2**	**94.4%**
Battelle Columbus	BC-201	S5490	0	N/A	0	N/A	0	N/A
	BC-202	S5490	0	N/A	0	N/A	0	N/A
Total Battelle Columbus IDCs			**0**		**0**	**N/A**	**0**	**N/A**
Hanford	LA-007	S5400	0	N/A	0	N/A	0	N/A
	LA-009	S5400	0	N/A	0	N/A	0	N/A
	LA-010	S5400	0	N/A	0	N/A	0	N/A
Total Hanford IDCs			**0**		**0**	**N/A**	**0**	**N/A**
Argonne East	AE-100	S5400	1	N/A	0	100%	0	100%
	AE-101	S5400	0	N/A	0	N/A	0	N/A
	AE-104	S5400	3	N/A	0	100%	0	100%
	AE-106	S5400	0	N/A	0	N/A	0	N/A
	AE-110	S5400	0	N/A	0	N/A	0	N/A
	AE-120	S5400	0	N/A	0	N/A	0	N/A
Total Argonne East IDCs			**4**		**0**	**100%**	**0**	**100%**

Generator	IDC	WMC	Validated Containers Examined	AKR No(s)./ RVU	IDC Changed Containers	IDC % Accuracy	WMC/WS Changed Containers	WMC/WS% Accuracy
Materials and Fuels Complex	AW-150	S5490	85	N/A	0	100%	0	100%
	AW-160	S5490	56	N/A	0	100%	0	100%
	AW-161	S5490	4	N/A	0	100%	0	100%
	AW-162	S5490	26	780, 788	2	92%	0	100%
	AW-163	S5490	5	N/A	0	100%	0	100%
	AW-164	S5490	181	N/A	0	100%	0	100%
	AW-165	S5490	1	N/A	0	100%	0	100%
	AW-167	S5490	82	N/A	0	100%	0	100%
Total Materials and Fuels Complex IDCs			**440**		**2**	**99.5%**	**0**	**100%**
Subsurface Disposal Area	SD-177	S5490	3	N/A	0	100%	0	100%
Total Subsurface Disposal Area IDCs			**3**		**0**	**100%**	**0**	**100%**
Overall Total			**7,368**		**65**	**99.1%**	**59**	**99.2%**

Table 4. Accuracy of AMWTP WIPP-Certified Containers by Generator.

WSP Number	Certified Containers	Confirmation-Failed Containers	Confirmation % Accuracy
BN510.1	531	0	100%
BN510.2	203	0	100%
BN510.3	605	0	100%
BN600	0	0	100%
AMWTP TOTAL	**1,339**	**0**	**100%**
BN004	55	0	100%
BN222	44	0	100%
BNINW216	1022	0	100%
BNINW218	122	0	100%
Rocky Flats TOTAL	**1243**	**0**	**100%**
BN835	6	0	100%
BN836	31	0	100%
Mound TOTAL	**37**	**0**	**100%**
Overall TOTAL	**2,619**	**0**	**100%**

AK Resolution Ledger

10/20/2014, 11:48 AM

AKR	AKR Year (i.e., AKR-XX-###)	Date Initiated	Revision Number	Revision Date	Initiator	IDC	Waste Stream or Loc	Description of Discrepancy	Description of Resolution	Date Signed	Number of Action Items	Number of AIs completed	Date All AIs Incorporated	Comments
8	03	6/11/2003			B Erhardt	RF-All	All RF Waste	Radionuclide	Use as is. No impact to WMC or HWN	6/12/2003	1	1	11/6/2003	Np-237 identified in all Rocky Flats waste streams.
9	03	6/23/2003			B Erhardt	RF-All	All RF Waste	Radionuclide	Superseded by AKR-05-208	6/23/2003	1	1	12/1/2003	SUPERSEDED. SEE AKR-05-208. Cs-137 and Sr-90 identified in all Rocky Flats waste streams.
10	03	6/23/2003			B Erhardt	RF-All	All RF Waste	Radionuclide	Use as is. No impact to WMC or HWN	6/23/2003	1	1	12/1/2003	K-40 identified in all Rocky Flats waste streams.
11	03	9/25/2003			B Erhardt	RF-374	BN510	Unexpected Materials	Use as is. No impact to WMC	9/29/2003	1	1	11/2/2006	Metal debris found in RF-IDC-374. RPT 05 addresses action item
12	03	9/29/2003			B Erhardt	RF-330	BNINW169	Unexpected Materials	Use as is. No impact to WMC	9/29/2003	1	1	3/19/2006	Oil-Dri identified outside of expected quantity of AK Document.
13	03	9/29/2003			B Erhardt	RF-376	BNINW211	Unexpected Packaging	Use as is. No impact to WMC	10/3/2003	1	1	11/2/2006	Layers of containment exceed AK document. RPT 05 addresses issue.
14	03	10/1/2003			B Erhardt	RF-336	BNINW169	Unexpected Materials	Use as is. No impact to WMC	10/1/2003	1	1	3/19/2006	Vermiculite identified outside of expected quantity of AK document.
15	03	10/1/2003			B Erhardt	RF-337	BNINW198	Unexpected Materials	Use as is. No impact to WMC	10/1/2003	1	1	3/19/2006	Oil-Dri identified outside of expected quantity of AK Document.
16	03	10/1/2003			B Erhardt	RF-336	BNINW169	Unexpected Materials	Use as is. No impact to WMC	10/1/2003	1	1	3/19/2006	Oil-Dri identified outside of expected quantity of AK Document.
17	03	10/9/2003			C Abbott	RF-374	BN510	Unexpected Materials	Use as is. No impact to WMC	10/9/2003	1	1	2/19/2005	Ceiling tiles identified in RF-IDC-374 drum during RTR. TRUW-05 updated.
18	03	10/14/2003			S Hailey	RF-001	BNINW216	Unexpected Packaging	Use as is. No impact to WMC or HWN	10/14/2003	1	1	3/4/2004	Filtering bag identified during VE; twist/tie expected bag method.
19	03	10/14/2003			B Erhardt	RF-371	BN510	Unexpected Materials	Use as is. No impact to WMC or HWN	10/14/2003	1	1	11/2/2006	Miscellaneous metal identified in RF-IDC-371 (Fire Brick). RPT 05 and BN161 addresses issue.
20	03	10/21/2003			B Tolman	RF-330	BNINW169	IDC Change	Change IDC from RF-330 to RF-480	10/21/2003	2	2	2/21/2006	IDC Change in WTS; update WSS for IDC 480 to include prefix 0389. AK Documentation updated.
21	03	10/21/2003			B Tolman	RF-336	BNINW169	IDC Change	Change IDC from RF-336 to RF-480	10/27/2003	2	2	11/2/2000	IDC Change in WTS; update WSS for IDC 480 to include prefix 0389 as gen loc. TRUW-56 addresses issue 480 updated
22	03	10/22/2003			B Tolman	RF-All	All RF Waste	Unexpected Packaging	Use as is. No impact to WMC to HWN	10/23/2003	2	2	11/2/2006	Filtering bag identified during VE or RTR; twist/tie expected bag method. RPT 05 addresses issue
23	03	10/28/2003			B Tolman	BN-512	BN510	Other	Generate new IDC for liquid absorption secondary waste	10/29/2003	5	5	11/2/2006	Created IDC 512; Add to RPT-TRUW-06 and -12. RPT 05 rev.11 reflects IDC is no longer needed.
24	03	11/4/2003			B Tolman	RF-374	BN510	Other	Add Prefix 0017 to RF-374	11/10/2003	1	1	11/2/2006	Prefix 0017 acceptable as prefix for IDC 374; pkg date indicates Bldg. 776 as gen bldg
25	03	11/11/2003	1	3/1/2004	B Tolman	RF-001	BNINW216	Unexpected Packaging	Use as is. No impact to WMC or HWN	11/11/2003	2	2	3/4/2004	Absence of rigid liner does not impact WMC or HWN. AK Documentation updated.
26	03	11/12/2003			B Tolman	RF-007	BNINW218	Unexpected Materials	Add Oil-Dri as acceptable absorbent	11/12/2003	2	2	3/17/2004	Add Oil-Dri as acceptable absorbent for IDC 007 containers.
27	03	11/25/2003			C Major	RF-374	BN510	Unexpected Materials	Metal is sometimes observed in IDC-374 debris waste.	11/25/2003	1	1	11/2/2006	Specifically list metal as an acceptable item for IDC 374 debris waste. RPT 05 addresses issue.
28	03	12/3/2003			B Erhardt	RF-337	BNINW198	Other	Add Prefix 0032 to RF-337	12/3/2003	1	1	3/12/2006	Prefix 0032 acceptable for RF-337
29	---	12/3/2003			C Major	Not used			NOT USED - CANCELLED AKR	12/4/2003	0	0		Replaced with AKR-05-327
30	03	12/4/2003			B Erhardt	RF-All	All RF Waste	Radionuclide	Use as is. No impact to WMC or HWN	12/4/2003	1	1	3/12/2006	Am-243 identified in all Rocky Flats (RF) waste streams.
31	03	12/9/2003			B Erhardt	RF-440	BNINW243	Other	Add Prefix 0018 to RF-440	12/9/2003	1	1	3/12/2006	Prefix 0018 acceptable for RF-440.
32	03	12/9/2003			B Tolman	RF-490	BNINW211	IDC Change	Change IDC from RF-490 to RF-480	12/10/2003	2	2	11/2/2006	IDC Change in WTS; update WSS for IDC 480 to include prefix 0389 as gen loc. WTS and RTP 56 updated.
33	03	12/10/2003			B Tolman	RF-All	All RF Waste	Radionuclide	Use as is. No impact to WMC or HWN	12/10/2003	1	1	3/12/2006	Cm-245 identified in all Rocky Flats waste streams
34	03	12/15/2003			B Tolman	RF-002	BNINW216	IDC Change	Change IDC from RF-002 to RF-371	12/15/2003	1	1	12/26/2005	Retain IDC 002 due to insufficient AK; restore 002 data in WTS; drum to be VE'd. NCR closed on 12/26/05. TS updated
35	03	12/17/2003	1	2/8/2004	B Tolman	RF-007	BNINW218	Unexpected Packaging	Use as is. No impact to WMC or HWN	12/17/2003	1	1	3/17/2004	Drum bagging absent in IDC 007 drums. AK Summaries updated.
36	03	12/17/2003	1	2/19/2004	B Tolman	RF-007	BNINW218	Unexpected Materials	Use as is. No impact to WMC or HWN	12/17/2003	1	1	3/17/2004	R1 - 803 drums too. Vermiculite may be present in IDC 007 drums. AK Summaries updated.
37	03	12/17/2003			B Erhardt	RF-007	BNINW218	Unexpected Materials	Use as is. No impact to WMC or HWN	12/17/2003	1	1	3/17/2004	Unspecified absorbent material may be present in RF-007 containers. TRUW-15 updated.
38	03	12/17/2003	1	2/4/2004	B Tolman	RF-001	BNINW216	Unexpected Packaging	Use as is. No impact to WMC or HWN	12/17/2003	1	1	3/4/2004	Rev 1 Drum bagging absent in IDC 001, 002, and 800 drums. AK Documentation updated.
39	03	12/23/2003			B Tolman	RF-807	BNINW218	Unexpected Packaging	Use as is. No impact to WMC or HWN	12/23/2003	1	1	3/17/2004	Drum bagging absent in IDC 807 drums. AK Documentation updated.
40	---	8/20/2008				Not used			NOT USED - CANCELLED AKR		0	0		
41	04	1/6/2004	1	1/21/2004	C Major	RF-All	All RF Waste	Unexpected Packaging	Use as is. No impact to WMC or HWN	1/21/2004	1	1	7/31/2005	Rev 1 "Stub bag" - applicable to cntnrs that have undergone VE or coring. AK Documention updated.
42	04	1/6/2004	1	8/15/2004	B Tolman	RF-004	BN004	Unexpected Materials	Use as is. No impact to WMC or HWN	1/6/2004	2	2	11/2/2006	R1 - Vermiculite or Oil Dri outside of expected time frames. RPT 05 addresses issue
43	04	1/6/2004			B Tolman	RF-004	BN004	Unexpected Materials	Use as is. No impact to WMC or HWN	1/6/2004	2	2	11/15/2006	Residual liquids may be present in IDC 004 waste
44	04	1/7/2004			B Tolman	RF-330	BNINW169	Unexpected Materials	Use as is. No impact to WMC or HWN	1/7/2004	2	2	11/2/2006	Absence of absorbent acceptable - applies to both Oil-Dri and vermiculite. RPT 05 addresses issue
45	04	1/7/2004			B Tolman	RF-336	BNINW169	Unexpected Materials	Use as is. No impact to WMC or HWN	1/7/2004	2	2	11/2/2006	Absence of absorbent acceptable - applies to both Oil-Dri and vermiculite. RPT 05 addresses issue
46	04	1/8/2004			B Tolman	RF-001	BNINW216	Unexpected Materials	Use as is. No impact to WMC or HWN	1/8/2004	1	1	7/31/2005	Absorbent (Oil Dri, vermiculite) outside of expected time frames. AK Documentation updated.
47	04	1/13/2004	1	1/21/2004	C Major	RF-007	BNINW218	Unexpected Packaging	Use as is. No impact to WMC or HWN	1/21/2004	1	1	7/31/2005	R1 >2 layers of cntnmnt may be found in Bldg 374 sludges (see 10005779). AK Documentation updated.
48	04	1/14/2004			B Tolman	RF-807	BNINW218	Unexpected Materials	Use as is. No impact to WMC or HWN	1/14/2004	1	1	7/31/2005	Oil-Dri may be present in IDC 807 drums. AK Documentation updated.
49	04	1/20/2004			B Tolman	RF-All	All RF Waste	Unexpected Packaging	Use as is. No impact to WMC or HWN	1/20/2004	1	1	7/31/2005	Drum bagging absent in RF drums (all IDCs). AK Documentation updated.
50	04	1/20/2004	1	3/10/2004	B Tolman	RF-001	BNINW216	Unexpected Packaging	Use as is. No impact to WMC or HWN	1/20/2004	2	2	7/31/2005	Round bottom liner in lieu of 90-mil rigid liner. AK Documentation updated.
51	04	1/24/2004	1	5/30/2005	S Hailey	RF-001	BNINW216	Unexpected Packaging	Use as is. No impact to WMC or HWN	5/31/2005	1	1	7/31/2005	Rev. 1 applies to RF-IDC-002. More than 2 layers of containment
52	---	1/29/2004			B Erhardt	Not used	N/A	Other	NOT USED - CANCELLED AKR		0	0		
53	04	1/31/2004			B Tolman	RF-336	BNINW169	Unexpected Materials	Use as is. No impact to WMC or HWN	1/31/2004	2	2	11/2/2006	Absorbent (Oil Dri, vermiculite) outside of expected time frames. RPT 05 addresses issue
54	04	1/31/2004	1	2/8/2004	B Tolman	RF-480	BN510	Unexpected Packaging	Use as is. No impact to WMC or HWN	1/31/2004	2	2	2/21/2006	Rev 1 Liner absence of unexpected liner type does not impact characterization
55	04	2/2/2004	1	4/27/2004	B Tolman	RF-376	BN510	IDC Change	Change IDC from RF-330 to RF-376	2/2/2004	2	2	5/19/2005	IDC Change in WTS; operator recommended 338, but more approp IDC is 376. See NCR 4017 for container 10006796.
56	04	2/2/2004			B Tolman	RF-330	BNINW169	Unexpected Materials	Use as is. No impact to WMC or HWN	2/2/2004	2	2	11/2/2006	Absorbent (Oil Dri, vermiculite) outside of expected time frames. RPT 05 addresses issue

AK Resolution Ledger

10/20/2014, 11:48 AM

AKR	AKR "Year" (i.e., AKR-XX-###)	Date Initiated	Revision Number	Revision Date	Initiator	IDC	Waste Stream or Lot	Description of Discrepancy	Description of Resolution	Date Signed	Number of Action Items	Number of Ak completed	Date All Ak Incorporated	Comments
57	04	2/2/2004			B Tolman	RF-374	BN510	Unexpected Materials	Use as is. No impact to WMC or HWN	2/2/2004	2	2	11/2/2006	Absence of absorbent acceptable - applies to both Oil-Dri and vermiculite. RPT 05 addresses issue
58	04	2/2/2004			B Tolman	RF-371	BN510	Unexpected Packaging	Use as is. No impact to WMC or HWN	2/2/2004	2	2	11/2/2006	Cardboard liner used after 1972; includes 90 mil liner. RPT 05 addresses issue
59	04	2/7/2004			C Major	RF-004	BN004	Unexpected Packaging	Use as is. No impact to WMC or HWN	2/7/2004	2	2	11/2/2006	3 layers of packing found. RPT 05 addresses issue
60	04	2/8/2004			B Tolman	RF-480	BN510	IDC Change	Change IDC from RF-480 to RF-970	2/8/2004	2	2	11/2/2006	IDC Change in WTS, associate IDC 970 with prefix 1371 in applicable documentation
61	04	2/8/2004			B Tolman	RF-374	BN510	Unexpected Packaging	Use as is. No impact to WMC or HWN	2/8/2004	2	2	11/2/2006	Cardboard liner used after 1972 instead of rigid liner. RPT 05 addresses issue
62	04	2/8/2004			B Tolman	RF-337	BNINW198	Unexpected Materials	Use as is. No impact to WMC or HWN	2/8/2004	2	2	11/2/2006	Absorbent (Oil Dri, vermiculite) outside of expected time frames. RPT 05 addresses issue
63	04	2/9/2004			B Tolman	RF-696	BNINW222	Unexpected Materials	Use as is. No impact to WMC or HWN	2/9/2004	2	2	11/2/2006	Absorbent (Oil Dri, vermiculite) outside of expected time frames.RPT 05 addresses issue
64	04	2/9/2004			B Tolman	RF-800	BNINW216	Unexpected Materials	Use as is. No impact to WMC or HWN	2/9/2004	1	1	7/31/2005	Absorbent (Oil Dri, vermiculite) outside of expected time frames. AK Documentation updated.
65	04	2/9/2004			B Tolman	RF-300	BN510	Unexpected Materials	Use as is. No impact to WMC or HWN	2/9/2004	2	2	11/2/2006	Cardboard liner used after 1972. RPTs 05 and 56 addresses issue
66	04	2/10/2004			B Tolman	RF-330	BNINW169	Unexpected Materials	Use as is. No impact to WMC or HWN	2/10/2004	2	2	11/2/2006	Absence of rigid liner does not impact WMC or HWN.RPT 05 addresses issue
67	04	2/10/2004	1	3/7/2004	B Tolman	RF-336	BNINW169	Unexpected Materials	Use as is. No impact to WMC or HWN	2/10/2004	2	2	11/2/2006	Rev 1 Liner type (cardboard or rigid) does not impact WMC or HWN. RPT 05 addresses issue
68	04	2/15/2004			B Tolman	RF-337	BNINW198	Unexpected Packaging	Use as is. No impact to WMC or HWN	2/15/2004	2	2	11/2/2006	Liner absence or unexpected liner type does not impact characterization. RPT 05 addresses issue
69	04	2/15/2004			B Tolman	RF-336	BNINW169	Unexpected Packaging	Use as is. No impact to WMC or HWN	2/15/2004	2	2	11/2/2006	More than 4 layers of containment. RPT 05 addresses issue
70	04	2/18/2004			B Tolman	RF-376	BNINW211	Unexpected Packaging	Use as is. No impact to WMC or HWN	2/18/2004	2	2	11/2/2006	Liner type (cardboard or rigid) does not impact WMC or HWN. RPT 05 addresses issue
71	04	2/18/2004			B Tolman	RF-480	BN510	Unexpected Materials	Use as is. No impact to WMC or HWN	2/18/2004	2	2	11/2/2006	Wet Cell lead battery with verifiable liquids less than 1" (excludes non-verifiable batteries)
72	04	2/22/2004			B Tolman	RF-337	BNINW198	Unexpected Materials	Use as is. No impact to WMC or HWN	2/22/2004	2	2	11/2/2006	Absence of absorbent acceptable - applies to both Oil-Dri and vermiculite. RPT 05 addresses issue
73	04	3/3/2004			B Tolman	RF-374	BN510	Unexpected Materials	Use as is. No impact to WMC or HWN	3/3/2004	1	1	11/2/2006	Poly bottles do not impact WMC or HWN assignments. RPT 05 addresses issue
74	04	3/7/2004			B Tolman	RF-336	BNINW169	Unexpected Materials	Use as is. No impact to WMC or HWN	3/7/2004	2	2	11/2/2006	Fiber packs may be present in IDC 336 waste. RPT 05 addresses issue
75	04	3/8/2004	1	1/24/2008	B Tolman	RF-300	BN510	Unexpected Materials	No impact to WMC or HWN.	3/8/2004	1	1	2/14/2008	Revised to identify Kraft Tubes may be present in IDC 300 waste.
76	04	3/10/2004			B Tolman	RF-001	UNK	Unexpected Packaging	Change IDC from RF-001 to UN-00B	3/10/2004	3	3	11/2/2006	Drums are inconsistent with known AK. (Update: Retained IDC RF-001)
77	04	5/18/2004			S Hailey	RF-001	BNINW216	Unexpected Packaging	Change IDC from RF-001 to RF-290	5/18/2004	4	4	11/2/2006	IDC Changes recommended for container within container IDC 001s. WTS and RPT 05 addresses issues (Update: Retained IDC RF-001)
78	04	6/2/2004			S Hailey	RF-696	BNINW222	IDC Change	Change IDC from RF-292 to RF-696	6/9/2004	0	0		IDC Change recommended for container labeled as IDC 007. Historical IDC of 292
79	04	6/3/2004			B Tolman	RF-320	BN510	IDC Change	Change IDC from RF-480 to RF-320	6/3/2004	1	1	11/2/2006	Drum contains >50% volume IDC 320. WTS updated
80	04	6/3/2004	1	2/27/2006	C Major	MD-All	BN835	Radionuclide	Use as is. No impact to WMC or HWN	10/17/2004	1	1	7/31/2005	K-40 detected during RA of MD waste; identify across all MD waste streams.R1 2/27/06
81	---	6/7/2004			C Major	Not used	BN290	Other	NOT USED - CANCELLED AKR		0	0		
82	04	6/9/2004			B Tolman	RF-All	All RF Waste	Other	Use as is. No impact to WMC or HWN	6/9/2004	3	3	7/31/2005	Prefixes RD93, RD94, RD95, BN91, BN92, and BN93 acceptable for RF waste
83	04	6/9/2004			B Erhardt	RF-807	BNINW218	Unexpected Materials	Use as is. No impact to WMC or HWN	6/9/2004	1	1	7/31/2005	Vermiculite is an acceptable absorbent type for RF-807 containers. AK Documentation updated.
84	04	6/10/2004			B Tolman	RF-002	BNINW216	Unexpected Materials	Use as is. No impact to WMC or HWN	6/10/2004	1	1	7/31/2005	Vermiculite outside of expected time frames. AK Documentation updated.
85	---	8/20/2008				Not used			NOT USED - CANCELLED AKR		0	0		
86	04	6/10/2004	1	10/21/2008	S Hailey	RF-425	BN425	IDC Change	Change IDC from RF-292 to RF-425	6/15/2004	1	1	11/2/2006	IDC Change recommended from 292 to UN-00B. AKR determined RF-425 to be appropriate. WTS and RPT 05 addresses issues
87	04	6/14/2004			C Major	RF-292	BNINW222	Unexpected Packaging	Use as is. No impact to WMC or HWN	6/15/2004	3	3	11/2/2006	More than 4 layers of containment. RPT 05 addresses issues
88	04	6/15/2004			S Hailey	RF-001	BNINW216	IDC Change	Change IDC from RF-290 to RF-001	6/15/2004	1	1	11/2/2006	IDC Change recommended by operator as 290. AKR determined IDC should go back to 001. WTS and RPT 05 addresses issues
89	04	6/15/2004			S Hailey	RF-440	BN510	IDC Change	Change IDC from RF-337 to RF-440	6/16/2004	0	0		SEE AKR-04-206R1!! IDC Change recommended on 3 drums from an RF-337 to an RF-440.
90	04	6/16/2004			S Hailey	RF-330	BN510	IDC Change	Change IDC from RF-330 to RF-480	6/16/2004	0	0		IDC Change recommended from RF-330 to RF-480. NCR 4764
91	04	6/16/2004			S Hailey	RF-330	BN510	IDC Change	Change IDC from RF-330 to RF-480	6/17/2004	0	0		IDC Change recommended from RF-330 to RF-480. NCR 5040
92	04	6/17/2004			S Hailey	RF-425	BN425	IDC Change	Change IDC from RF-480 to RF-425	6/17/2004	1	1	11/2/2006	IDC Change recommended from RF-480 to RF-292. Final IDC of RF-425 NCR-4885. WTS addresses issues
93	04	6/17/2004			S Hailey	RF-440	BN510	IDC Change	Change IDC from RF-336 to RF-440	6/17/2004	0	0		IDC Change recommended from RF-336 to RF-440. NCR 4887
94	04	6/17/2004			S Hailey	RF-960	BNINW510	IDC Change	Change IDC from RF-960 to RF-336	6/17/2004	0	0		IDC Change recommended from RF-960 to RF-336. NCR 4888
95	04	6/17/2004			S Hailey	RF-440	BNINW510	IDC Change	Change IDC from RF-440 to RF-330	6/17/2004	0	0		IDC Change recommended from RF-440 to RF-330. NCR 4889
96	04	6/17/2004			S Hailey	RF-440	BNINW510	IDC Change	Change IDC from RF-440 to RF-336	6/17/2004	0	0		IDC Change recommended from RF-440 to RF-336. NCR 5033
97	04	6/17/2004			S Hailey	RF-950	BNINW510	IDC Change	Change IDC from RF-900 to RF-950	6/17/2004	0	0		IDC Change recommended from RF-900 to RF-950. NCR 4893
98	04	6/17/2004			S Hailey	UN-00A	BNINW510	IDC Change	Change IDC from UN-00A to RF-337	6/21/2004	1	1	11/2/2006	IDC Change recommended from RF-336 to unknown. Final IDC of 337 NCR 4894. WTS addresses issues
99	04	6/21/2004	1	8/31/2004	S Hailey	RF-337	BN510	IDC Change	Change IDC from RF-337 to RF-480	10/28/2004	0	0		Rev 1 IDC Change recommended from RF-337 to RF-480. NCR 4895
100	04	6/30/2004			B Erhardt	RF-003	BN003	Unexpected Materials	Use as is. No impact to WMC or HWN	6/30/2004	1	1	11/2/2006	Vermiculite in RF-IDC-003 waste different than expected quantities of AK documentation. RPT 05 addresses issues
101	04	7/1/2004			B Erhardt	RF-441	BN247	Other	Add Prefix 0012 and 0047 to RF-441	7/8/2004	1	1	3/15/2006	Prefix 0012 and 0047 acceptable for RF-441
102	04	7/8/2004			B Tolman	RF-376	BN510	IDC Change	Change IDC from RF-376 to RF-970	7/8/2004	1	1	11/2/2006	IDC Change recommended from RF-376 to RF-970. Add Prefix 0002 to AK. NCR 5042
103	04	7/8/2004			B Erhardt	RF-464	BN510	Unexpected Materials	Use as is. No impact to WMC or HWN	7/8/2004	1	1	11/2/2006	Oil-Dri identified outside of expected quantity of AK Document. RPT 05 addresses issues
104	04	7/14/2004			S Hailey	RF-480	BN510	IDC Change	Change IDC from RF-337 back to RF-480	8/31/2004	1	1	11/2/2006	IDC Change recommended from RF-337 to RF-480. NCR 5045, NCR 6394. WTS updated

AK Resolution Ledger

10/20/2014, 11:48 AM

AKR	AKR "Year" (i.e., AKR-XX-###)	Date Initiated	Revision Number	Revision Date	Initiator	IDC	Waste Stream or Loc.	Description of Discrepancy	Description or Resolution	Date Signed	Number of Assets Items	Number of AIs Completed	Date All AIs Incorporated	Comments
105	04	7/14/2004			B Tolman	RF-337	BN510	IDC Change	Change IDC from RF-337 to RF-335	7/14/2004	1	1	11/2/2006	IDC Change recommended from RF-337 to RF-335. Add Prefix 0004 to AK. NCR 5323
106	04	7/15/2004			B Tolman	RF-432	BN432T	IDC Change	Change IDC from RF-337 to RF-432	2/28/2005	1	1	11/2/2006	Investigate historical ID before completing AKR. NCR 5331. Historical ID cannot be verified. Historical verified WTS updated
107	04	7/16/2004			B Erhardt	RF-338	BN510	Other	Add Prefix 0089 to RF-338	7/16/2004	1	1	3/15/2006	Prefix 0089 acceptable for RF-338
108	04	7/16/2004			B Erhardt	RF-960	BN510	Other	Add Prefix 0089 to RF-960	7/16/2004	1	1	3/15/2006	Prefix 0089 acceptable for RF-960
109	04	7/18/2004			B Erhardt	RF-480	BN510	Other	Add Prefix 0089 to RF-480	7/18/2004	1	1	3/15/2006	Prefix 0089 acceptable for RF-480
110	04	7/19/2004			B Erhardt	RF-371	BNINW161	Other	Add Prefix 0076 to RF-371	7/19/2004	1	1	11/2/2006	Prefix 0076 acceptable for RF-371. RPT 56 updated
111	04	7/19/2004			B Erhardt	RF-337	BNINW198	Other	Add Prefix 0012 to RF-337	7/19/2004	1	1	3/12/2006	Prefix 0012 acceptable for RF-337
112	04	7/22/2004	1	8/6/2004	B Tolman	RF-004	BN004	Unexpected Materials	Use as is. No impact to WMC or HWN	7/22/2004	2	2	11/2/2006	R1 - Absence/variable quants of absorbent acceptable - applies to both Oil-Dri & vermiculite. RPT 05 addresses issues
113	04	7/22/2004			B Tolman	RF-817	BN817	Unexpected Materials	Use as is. No impact to WMC or HWN	7/22/2004	2	2	11/2/2006	Absence of absorbent acceptable - applies to both Oil-Dri and vermiculite. RPT 05 addresses issues
114	04	7/22/2004			B Tolman	RF-004	BN004	Unexpected Materials	Use as is. No impact to WMC or HWN	7/22/2004	2	2	11/2/2006	Plastic bagging identified. RPT 05 addresses issues
115	04	7/22/2004	1	8/8/2004	B Tolman	RF-004	BN004	Unexpected Materials	Use as is. No impact to WMC or HWN	7/22/2004	2	2	11/2/2006	R1 - Miscellaneous metals (including Pb tape) identified. RPT 05 addresses issues
116	04	7/22/2004	1	8/13/2004	B Tolman	RF-003	BN003	Unexpected Materials	Use as is. No impact to WMC or HWN	7/22/2004	2	2	11/2/2006	R1 - Absence/variable quantities of absorbent acceptable - applies to both Oil-Dri and vermiculite. RPT 05 addresses issues
117	04	7/22/2004			B Tolman	RF-822	BN432T	Unexpected Materials	Use as is. No impact to WMC or HWN	7/22/2004	2	2	11/2/2006	Absence of absorbent acceptable - applies to both Oil-Dri and vermiculite. RPT 05 addresses issues
118	04	7/22/2004			B Tolman	RF-003	BN003	Unexpected Packaging	Use as is. No impact to WMC or HWN	7/22/2004	2	2	11/2/2006	Unexpected packaging configuration (no bag)., RPT 05 addresses issues
119	—	7/23/2004			B Tolman	Not used	BN836	Unexpected Materials	NOT USED - CANCELLED AKR		0	0		
120	04	7/26/2004			B Erhardt	RF-440	BNINW243	Other	Add Prefix 0744 to RF-440	7/26/2004	1	1	3/12/2006	Prefix 0744 acceptable for RF-440
121	04	7/26/2004			B Erhardt	RF-292	BNINW222	Unexpected Materials	Iron Based or Other Metals for paint cans	7/26/2004	1	1	11/2/2006	Iron-Based Metals/Alloys or Other Metals acceptable to describe paint cans. RPT 05 addresses issues
122	04	7/26/2004			B Erhardt	RF-335	BNINW211	Other	Add Prefix 0011 to RF-335	7/27/2004	1	1	11/2/2006	Prefix 0011 acceptable for RF-335
123	04	7/27/2004			B Erhardt	RF-374	BN510	Unexpected Materials	Use as is. No impact to WMC or HWN	7/27/2004	1	1	11/2/2006	Oil-Dri identified outside of expected quantity of AK Document. RF-374. RPT 05 addresses issues
124	04	7/27/2004			B Erhardt	RF-480	BN510	Other	Add Prefix 0067 to RF-480	7/27/2004	1	1	3/12/2006	Prefix 0067 acceptable for RF-480
125	04	8/7/2004			B Tolman	RF-802	BN004	Unexpected Materials	Use as is. No impact to WMC or HWN	8/13/2004	2	2	11/2/2006	Absence of absorbent acceptable - applies to Oil-Dri, vermiculite, and Portland cement. RPT 05 addresses issues
126	04	8/8/2004			B Tolman	RF-801	BN801	Unexpected Packaging	Use as is. No impact to WMC or HWN	8/13/2004	2	2	11/2/2006	Rev 1 Unexpected packaging configuration - > 2 layers containment. RPT 05 addresses issues
127	04	8/8/2004	1	9/24/2004	C Major	RF-330	BNINW169	Other	Use as is. No impact to WMC or HWN	9/24/2004	1	1	3/19/2006	R1 - Container pack dates expanded to include April 1972 to Oct. 1976 for prefix 0090
128	04	8/13/2004			B Tolman	RF-004	BN004	Unexpected Packaging	Use as is. No impact to WMC or HWN	8/13/2004	2	2	11/2/2006	Unexpected packaging configuration. RPT 05 addresses issues
129	—	8/20/2008				Not used			NOT USED - CANCELLED AKR		0	0		
130	04	8/13/2004			B Tolman	RF-802	BN004	Unexpected Materials	Use as is. No impact to WMC or HWN	8/13/2004	2	2	11/2/2006	Miscellaneous metals identified. RPT 05 addresses issues
131	04	8/13/2004			B Tolman	RF-960	BN510	Unexpected Materials	Use as is. No impact to WMC or HWN	8/13/2004	2	2	11/2/2006	Oil Dri outside of expected quantities. RPT 05 addresses issues
132	04	8/14/2004			B Tolman	RF-All	All RF Waste	Unexpected Packaging	Use as is. No impact to WMC or HWN	8/14/2004	1	1	7/31/2005	Twist/tied bag closure method ID'd during RTR; twist/taped expected. AK Documentation updated.
133	04	8/14/2004			B Tolman	RF-801	BN801	Unexpected Packaging	Use as is. No impact to WMC or HWN	8/14/2004	2	2	11/2/2006	Drum bagging absent in IDC 801 drums. RPT 05 addresses issues
134	04	8/14/2004			B Tolman	RF-801	BN801	Unexpected Materials	Use as is. No impact to WMC or HWN	8/14/2004	2	2	11/2/2006	Plastic waste present in IDC 801 waste. RPT 05 addresses issues
135	04	8/21/2004			S Carpenter	RF-374	BN510	Unexpected Materials	Use as is. No impact to WMC or HWN	8/21/2004	1	1	11/2/2006	Blacktop, concrete and dirt in IDC 336, NCR 5569, update pack dates prefix 0002. RPT 56 updated
136	04	8/21/2004	1	3/12/2005	S Carpenter	RF-464	BN510	Unexpected Materials	Use as is. No impact to WMC or HWN	8/21/2004	1	1	11/2/2006	Plexiglass waste in IDC 375 Oil-Dri, NCR 5636, add prefix 0029 as generation
137	04	8/21/2004	1	10/27/2004	C Major	RF-003	BN003	Unexpected Materials	Use as is. No impact to WMC or HWN	8/21/2004	2	2	11/2/2006	Plastic (poly bottles) identified in waste. RPT 05 addresses issues
138	04	8/23/2004			B Tolman	RF-All	All RF Waste	Other	Use as is. No impact to WMC or HWN	8/23/2004	2	2	11/2/2006	Prefix 0056 RF-All: have identified radionuclides of concern; previously unknown. RPT 07 addresses radionuclides
139	04	8/31/2004			S Hailey	RF-001	BNINW216	IDC Change	Change IDC from RF-290 to RF-001	8/31/2004	1	1	11/9/2006	IDC Change from 290 to 001. NCR 4699
140	04	8/31/2004			S Hailey	RF-007	BNINW218	IDC Change	Change IDC from UN-00B to RF-007	8/31/2004	0	0		IDC Change from UN-00B to RF-007. NCR 5699
141	—	9/1/2004			S Carpenter	Not used			NOT USED - CANCELLED AKR		0	0		Replaced with AKR-05-327
142	—	9/1/2004			S Carpenter	Not used			NOT USED - CANCELLED AKR		0	0		Replaced with AKR-05-327
143	—	8/20/2008				Not used			NOT USED - CANCELLED AKR		0	0		
144	04	9/4/2004			B Erhardt	RF-338	BN510	Other	Add Prefix 0076 to RF-338	9/4/2004	1	1	3/12/2006	Prefix 0076 acceptable for RF-338
145	04	9/4/2004			B Erhardt	RF-337	BNINW198	Other	Add Prefix 0011 to RF-337	9/4/2004	1	1	3/12/2006	Prefix 0011 acceptable for RF-337
146	04	9/5/2004	1	9/23/2004	B Erhardt	MD-836	BN836	Radionuclide	Use as is. No impact to WMC or HWN	9/5/2004	1	1	2/27/2006	R1 - MD-IDC-835. R0 - Co-60 identified in MD-IDC-836 waste
147	04	9/6/2004			S Carpenter	RF-440	BN510	IDC Change	Change IDC from RF-330 to RF-440	9/6/2004	1	1	3/12/2006	3 affected containers, NCRs: 9132, 8600, 7784, add prefix 0017 as generation
148	04	9/6/2004			S Carpenter	RF-440	BN510	IDC Change	Change IDC from RF-330 to RF-440	9/6/2004	1	1	3/12/2006	10015096, NCR 8614, prefix 0002 package dates update
149	04	9/6/2004			S Carpenter	RF-440	BN510	IDC Change	Change IDC from RF-330 to RF-440	9/7/2004	1	1	3/12/2006	10026027, NCR 9089, prefix 0744 package dates update
150	04	9/6/2004			S Carpenter	RF-337	BN510	IDC Change	Change IDC from RF-330 to RF-337	9/7/2004	1	1	11/9/2006	10021700, NCR 8596, no changes to AK
151	04	9/6/2004			S Carpenter	RF-337	BN510	IDC Change	Change IDC from RF-330 to RF-337	9/7/2004	1	1	3/12/2006	10026025, NCR 9090, update prefix 0746 package dates
152	04	9/6/2004			S Carpenter	RF-330	BN510	IDC Change	Change IDC from RF-330 to RF-480	9/7/2004	1	1	11/9/2006	10020221, NCR 9365, no changes to AK
153	04	9/8/2004			B Tolman	RF-440	BN510	IDC Change	Change IDC from RF-336 to RF-480	9/8/2004	1	1	11/9/2006	Change approved. NCR 5041.
154	04	9/8/2004	1	9/1/2005	S Carpenter	MD-All	All MD Waste	Unexpected Packaging	Absent plywood spacers	9/1/2005	1	1	2/19/2006	REV 1: Absence of plywood spacer is acceptable for all MD IDCs. AK Documentation updated.
155	04	9/8/2004			B Tolman	MD-All	BN835	Unexpected Materials	Use as is. No impact to WMC or HWN	9/9/2004	1	1	7/31/2005	"Oil-Dri" can be used in RTR to describe clay absorbents in MD waste. AK Documentation updated.
156	04	9/9/2004			N Kirk	RF-960	BN510	Unexpected Packaging	Use as is. No impact to WMC or HWN	9/9/2004	2	2	11/9/2006	Rigid liner absent for drums packed 12/26/72 and 1/10/73.
157	04	9/9/2004			N Kirk	RF-900	BN510	Unexpected Materials	Use as is. No impact to WMC or HWN	9/9/2004	2	2	11/9/2006	"Oil-Dri" found in quantities outside of expected quantities.
158	04	9/9/2004			P Fetzer	RF-950	BN510	Unexpected Materials	Use as is. No impact to WMC or HWN	9/9/2004	2	2	11/9/2006	Absence of absorbent acceptable - applies to both Oil-Dri and vermiculite

AK Resolution Ledger

10/20/2014, 11:48 AM

AKR	AKR "Year" (i.e., AKR-XX-###)	Date Initiated	Revision Number	Revision Date	Initiator	IDC	Waste Stream or Lot	Description of Discrepancy	Description of Resolution	Date Signed	Number of Action Items	Number of AIs completed	Date All AIs Incorporated	Comments
159	04	9/13/2004			B Erhardt	RF-432	BN432M	Unexpected Materials	Use as is. No impact to WMC or HWN	9/13/2004	1	1	11/9/2006	Oil-Dri identified outside of expected quantity of AK Document. RF-432
160	04	9/14/2004			P Fetzer	RF-950	BN510	Unexpected Materials	Use as is. No impact to WMC or HWN	9/14/2004	2	2	11/9/2006	Unexpected material (metal debris, cellulosics) identified
161	04	9/14/2004			P Fetzer	RF-371	BNINW161	Unexpected Packaging	Use as is. No impact to WMC or HWN	9/14/2004	2	2	11/9/2006	Unexpected packaging; no 90 mil liner, cardboard liner identified
162	04	9/14/2004			P Fetzer	RF-960	BN510	Unexpected Packaging	Use as is. No impact to WMC or HWN	9/14/2004	2	2	11/9/2006	Unexpected packaging; no 90 mil liner, cardboard liner identified
163	04	9/14/2004			B Tolman	RF-480	BN510	Unexpected Packaging	Use as is. No impact to WMC or HWN	9/14/2004	2	2	2/21/2006	Absence of rigid liner does not impact WMC or HWN. AK Documentation updated.
164	04	9/15/2004			P Fetzer	RF-425	BN425	Radionuclide	Use as is. No impact to WMC or HWN	9/16/2004	2	2	11/9/2006	Prefix 0075 includes Enriched Uranium for IDC 425
165	04	9/15/2004			N Kirk	RF-374	BN510	Other	Use as is. No impact to WMC or HWN	9/15/2004	1	1	11/9/2006	Pack date for IDC RF-374, Prefix 0746 outside of expected time frame
166	04	9/15/2004	1	11/6/2004	N Kirk	RF-376	BNINW211	Other	Add Prefix 0076 to RF-376	11/6/2004	1	1	11/9/2006	Rev 1 Prefix 0076 acceptable for RF-376; Rev. 1 included pack dates
167	04	9/15/2004			P Fetzer	RF-All	BN510	Other	Use as is. No impact to WMC or HWN	9/16/2004	2	2	11/9/2006	Prefix 0088 RF-All: have identified radionuclides of concern; previously unknown
168	—	9/17/2004			P Fetzer	Not used		Other	NOT USED - CANCELLED AKR		1	1	11/9/2006	Revised historical information. AKR not required. Determined to be MD-836
169	04	9/17/2004			N Kirk	RF-441	BNINW247	Other	Add Prefix 0002 to RF-441	9/17/2004	1	1	3/15/2006	Prefix 0002 acceptable for RF-441
170	04	9/17/2004			B Tolman	RF-292	BN510	IDC Change	Change IDC from RF-292 to RF-328	9/17/2004	2	2	3/15/2006	IDC Change 10024125; NCR 8800
171	04	9/19/2004			B Erhardt	RF-441	BNINW247	Other	Add Prefix 0005 to RF-441	9/19/2004	1	1	3/15/2006	Prefix 0005 acceptable for RF-441
172	04	9/19/2004			B Erhardt	RF-481	BNINW286	Other	Add Prefix 0041 to RF-481	9/19/2004	1	1	3/12/2006	Prefix 0041 acceptable for RF-481
173	04	9/22/2004	1	2/15/2005	C Major	RF-336	BN510	Unexpected Materials	Use as is. No impact to WMC or HWN	9/22/2004	2	2	11/9/2006	D-cells batteries observed in RF-336 (just like -330 and -337 waste).
174	04	9/24/2004			N Kirk	RF-432	BN432M	Unexpected Packaging	Use as is. No impact to WMC or HWN	9/24/2004	2	2	11/9/2006	Absence of absorbent acceptable - applies to both Oil-Dri and vermiculite
175	04	9/24/2004	2	10/16/2004	C Major	MD-835	BN835	Unexpected Packaging	Use as is. No impact to WMC or HWN	9/24/2004	1	1	7/31/2005	R2 - Also for MD-IDC 834. Absence of drum bagging (layers of cntnmnt). AK Documentation updated.
176	04	9/24/2004	2	6/7/2005	P Fetzer	MD-835	BN835	Unexpected Materials	Use as is. No impact to WMC or HWN	9/24/2004	1	1	7/31/2005	R2 - rubber and plastic debris (gasket, gloves) found in MD-IDC 834 & -835.
177	04	9/26/2004			B Erhardt	RF-339	BNINW252	Other	Add Prefix 0021 to RF-339	9/26/2004	1	1	3/12/2006	Prefix 0021 acceptable for RF-339
178	04	9/27/2004			B Erhardt	RF-330	BNINW169	Other	Add Prefix 0033 to RF-330	9/27/2004	1	1	3/12/2006	Prefix 0033 acceptable for RF-330
179	04	9/27/2004			B Erhardt	RF-All	All RF Waste	Radionuclide	Use as is. No impact to WMC or HWN	9/27/2004	1	1	3/12/2006	Cm-244 identified in all Rocky Flats waste streams
180	04	9/27/2004			B Erhardt	RF-338	BN510	Other	Add Prefix 0001 to RF-338	9/27/2004	1	1	11/9/2006	Prefix 0001 acceptable for RF-338
181	04	9/28/2004			B Erhardt	RF-338	BN510	Unexpected Packaging	Use as is. No impact to WMC or HWN	9/28/2004	2	2	11/9/2006	Absence of rigid liner does not impact WMC or HWN
182	04	10/2/2004			C Major	RF-976	BN976	Unexpected Materials	Use as is. No impact to WMC or HWN	10/2/2004	1	1	11/9/2006	Unexpected absorbent (Oil-Dri) found in RF-976 sludge
183	—	10/2/2004			N Kirk	Not used	N/A	Other	NOT USED - CANCELLED AKR		0	0		
184	04	10/2/2004			B Tolman	RF-001	BNINW216	Unexpected Materials	Use as is. No impact to WMC or HWN	10/2/2004	1	1	7/31/2005	Unexpected material (glass debris) identified. AK Documentation updated.
185	04	10/6/2004			B Erhardt	RF-320	BN510	Unexpected Packaging	No Impact to WMC or HWN	10/6/2004	1	1	3/15/2006	Container pack date of 12-18-75 acceptable for IDC 320 with prefix 0002
186	04	10/7/2004			B Erhardt	RF-339	BNINW252	Other	Add Prefix 0071 to RF-339	10/7/2004	1	1	3/12/2006	Prefix 0071 acceptable for RF-339
187	04	10/7/2004			B Erhardt	RF-338	BN510	Other	Expand pack date range for RF-338	10/15/2004	2	2	3/12/2006	Expand expected pack date range for RF-338, prefix 0076. No other impacts.
188	04	10/15/2004			B Erhardt	RF-007	BNINW218	IDC Change	Change IDC from Unknown to RF-007	10/15/2004	0	0		IDC Change for container 10013157. See NCR 5700
189	—	8/20/2008				Not used			NOT USED - CANCELLED AKR		0	0		
190	04	10/15/2004			B Erhardt	RF-330	BNINW169	Other	Add Prefix 0031 to RF-330	10/15/2004	1	1	3/12/2006	Prefix 0031 acceptable for RF-330
191	04	10/15/2004			B Erhardt	RF-001	BNINW216	IDC Change	Change IDC from Unknown to RF-001	10/15/2004	1	1	11/9/2006	IDC Change for container 10013160. See NCR 5701
192	04	10/16/2004			P Fetzer	RF-432	BN432T	Other	Add Prefix 0087 to RF-432	10/16/2004	1	1	11/9/2006	Prefix 0087 acceptable for RF-432
193	04	10/16/2004			P Fetzer	RF-All	BNINW510	Other	Use as is. No impact to WMC or HWN	10/16/2004	2	2	11/9/2006	Prefix 0087 RF-All: have identified radionuclides of concern; previously unknown
194	04	10/16/2004	1	10/30/2004	B Erhardt	RF-336	BN510	Other	Expand pack date range for RF-336	10/30/2004	1	1	11/9/2006	Rev 1 Expand expected pack date range for RF-336, prefix 0090. No other impacts.
195	04	10/17/2004			N Kirk	RF-292	BNINW222	Other	Expand pack date range for RF-292	10/17/2004	2	2	11/9/2006	Expand expected pack date range for RF-292, prefix 0002. No other impacts.
196	04	10/17/2004			N Kirk	RF-002	BNINW216	Unexpected Packaging	Use as is. No impact to WMC or HWN	10/17/2004	2	2	7/31/2005	Absence of rigid liner does not impact WMC or HWN. AK Documentation updated.
197	04	10/19/2004			P Fetzer	RF-320	BN510	Other	Use as is. No impact to WMC or HWN	10/17/2004	1	1	3/12/2006	Prefix 0087 acceptable for RF-320
198	04	10/20/2004			B Erhardt	RF-374	BN510	IDC Change	Change IDC from RF-330 to RF-374	10/20/2004	0	0		IDC Change for container 10015096. See NCR 8614
199	04	10/24/2004			P Fetzer	MD-836	BN836	Other	Use as is. No impact to WMC or HWN	10/26/2004	1	1	11/9/2006	Ac-227 identified in MD-IDC-836 waste
200	04	10/26/2004			P Fetzer	RF-All	BN510	Other	Use as is. No impact to WMC or HWN	10/27/2004	2	2	11/9/2006	Prefix 0035 RF-All: have identified radionuclides of concern; previously unknown
201	—	8/20/2008				Not used			NOT USED - CANCELLED AKR		0	0		
202	04	10/26/2004			B Tolman	RF-All	RF BN ALL	Other	Use U127A for RF prefix and pack dates	10/27/2004	1	1	11/9/2006	Prefixes and pack dates for RF waste will be verified from U127A database
203	04	10/28/2004				Not used			NOT USED - CANCELLED AKR		0	0		
204	—	10/29/2004			B Erhardt	Not used	BN510	IDC Change	NOT USED - CANCELLED AKR		0	0		
205	04	10/30/2004			B Erhardt	RF-330	BNINW169	Other	Expand pack date range for IDC 330, prefix 0076	10/30/2004	2	2	11/9/2006	Expand expected pack dates to include 8-27-71 to 3-5-86 for RF-330, prefix 0076
206	04	10/30/2004	1	3/31/2005	B Erhardt	RF-337	BN510	IDC Change	Change IDC from RF-440 to RF-337	10/30/2004	0	0		IDC Change for container 10003892. See NCR 10310. R1 adds 10015197, NCR 10312 (3-30-05)
207	04	11/6/2004	1	10/21/2008	B Erhardt	RF-425	BN510	IDC Change	Change IDC from RF-292 to RF-425	11/6/2004	1	1	11/9/2006	IDC Change for container 10003226. See NCR 10071
208	05	1/14/2005			B Tolman	RF-All	All RF Waste	Radionuclide	Expectation of Cs-137 and Sr-90 in WSS	2/28/2005	8	8	7/31/2005	Cs-137/Sr-90 expected only in RF-004 and 480 wastes. SUPERSEDES AKR-03-9. AK updated.
209	05	2/26/2005			S Carpenter	RF-320	BN510	Unexpected Packaging	Use as is. No impact to WMC or HWN	2/26/2005	2	2	11/9/2006	>4 layers of confinement may be expected for IDC 320 (Heavy Non-SS Metal)
210	—	8/21/2008				Not used			NOT USED - CANCELLED AKR		0	0		
211	05	3/9/2005			B Tolman	RF-001	BNINW216	Other	Use as is. No impact to WMC or HWN	3/9/2005	1	1	4/9/2005	IDCs 001, 002, 800 - Use HGAS flammable VOC results for WWIS reporting
212	05	3/9/2005			B Tolman	RF-007	BNINW218	Other	Use as is. No impact to WMC or HWN	3/9/2005	1	1	7/31/2005	IDCs 007, 803, 807b - Use HGAS flammable VOC results for WWIS reporting. AK Documentation updated.
213	05	3/18/2005			C Major	RF-330	BNINW247	IDC Change	Change IDC from RF-330 to RF-441	3/18/2005	0	0		IDC Change for container 10000967. See NCR 7538
214	—	8/21/2008				Not used			NOT USED - CANCELLED AKR		0	0		
215	05	3/21/2005			V Sendelweck	RF Box Waste	BN510	Other	Use 1970 as minimum RF generation date	8/27/2005	1	1	11/9/2006	Use 1970 as RFP minimum generation date for boxed waste
216	05	3/24/2005			C Major	BNINW216	BNINW216	HWN	Use as is. Statistics applied to WS vs lot	3/24/2005	0	0		1,1 Dichloroethylene UCL90 above PRQL; below PRQL applied to WS
217	05	3/24/2005			B Erhardt	RF-003	BN003	Unexpected Materials	Use as is. No impact to WMC or HWN	3/24/2005	2	2	11/9/2006	Unexpected material (metal debris) identified during RTR.
218	05	3/24/2005			B Erhardt	RF-375	BN510	Unexpected Materials	Use as is. No impact to WMC or HWN	3/24/2005	2	2	11/9/2006	Unexpected material (leaded glass) identified during RTR.
219	05	3/30/2005			B Tolman	RF-802	BN004	Unexpected Packaging	Use as is. No impact to WMC or HWN	3/30/2005	2	2	11/9/2006	Unexpected packaging configuration
220	05	3/31/2005			B Tolman	RF-337	BN510	IDC Change	Change IDC from RF-337 to RF-480	3/31/2005	0	0		IDC Changed from RF-337 to RF-480 based on RTR examination
221	—	3/31/2005			B Tolman	Not used			NOT USED - CANCELLED AKR	3/31/2005	0	0		Replaced with AKR-05-327
222	05	4/6/2005			B Erhardt	RF-002	BNINW216	IDC Change	Change IDC from RF-001 to RF-002	4/6/2005	0	0		IDC Change for container 10021738 from RF-001 to RF-002
223	05	4/7/2005			B Erhardt	RF-440	BN510	IDC Change	Change IDC from RF-004 to RF-440	4/7/2005	1	1	11/9/2006	IDC Change for container 10021281 from RF-004 to RF-440

AK Resolution Ledger

10/20/2014, 11:48 AM

AKR	AKR Year (i.e., AKR-XX-###)	Date Initiated	Revision Number	Revision Date	Initiator	IDC	Waste Stream or Lot	Description of Discrepancy	Description of Resolution	Date Signed	Number of Associated	Number of AKs completed	Date AK Ak Incorporated	Comments
224	05	4/7/2005			J Dye	MD-834-836	BN835	Unexpected Materials	Use as is. No impact to WMC or HWN	4/8/2005	1	1	7/31/2005	Vermiculite identified in IDC MD-834, 835, 836 waste. AK Documentation updated.
225	05	4/11/2005			B Tolman	BNINW216	BNINW216	HWN	Use as is. Statistics applied to WS	4/11/2005	0	0		1,1-Dichloroethane UCL90 above PRQL for lot; below PRQL applied to WS
226	—	8/21/2008				Not used			NOT USED - CANCELLED AKR		0	0		
227	05	4/14/2005			B Erhardt	MD-834	BN835	Unexpected Packaging	Use as is. No impact to WMC or HWN	4/14/2005	1	1	7/31/2005	Absence of rigid liner does not impact WMC or HWN. AK Documentation updated.
228	—	4/22/2005			B Erhardt	Not used			NOT USED - CANCELLED AKR		0	0		Replaced with AKR-05-327
229	—	8/20/2008				Not used			NOT USED - CANCELLED AKR		0	0		
230	05	4/26/2005			B Tolman	BN-510	BN510	HWN	Use as is. No impact to WMC or HWN	4/26/2005	0	0		
231	05	4/28/2005			N Kirk	RF-337	BN510	IDC Change	Change IDC from RF-330 to RF-337	4/28/2005	1	1	11/9/2006	Determines D035 (MEK) is not applicable to this waste stream/IDC
232	05	5/2/2005			B Tolman	BNINW216	BNINW216	Other	2-Propanol, 2-methyl- not included as a target analyte	5/2/2005	0	0		IDC Change for container 10026027 from RF-330 to RF-337
233	05	5/10/2005			B Tolman	RF-Debris	All RF Waste	Radionuclide	Use as is. No impact to WMC or HWN	5/11/2005	5	5	3/19/2006	Data for the waste stream shows detection of 2-Propanol, 2-methyl- well below 25%
234	05	5/10/2005			B Tolman	MD-Debris	BN510	Other	Change WMC to 5490 for MD-Debris	5/11/2005	5	5	3/19/2006	Acceptability of Cs/Sr in RF-Debris based on feedstock line (BN-508/510).
235	05	5/18/2005	1	8/23/2007	B Tolman	RF-All	BN510	HWN	Remove D032 for Hexachlorobenzene	5/18/2005	3	3	11/9/2006	Acceptable to change WMC for MD-Debris based of AKR justifications
236	05	5/18/2005	2	2/2/2006	S Carpenter	RF-292	BN510	IDC Change	Change IDC back to RF-292	6/15/2005	1	1	11/9/2006	No data to support application of D032 to RF debris wastes and BN-510
237	05	5/19/2005			V Sendelweck	RF-310	BN310 or BNINW273T	Other	WMC change to S5126	6/6/2005	5	5	3/12/2006	Change IDC back to RF-292
238	05	5/25/2005			B Erhardt	RF-All	All RF Waste	Unexpected Packaging	Use as is. No impact to WMC or HWN	5/25/2005	1	1	3/12/2006	Change WMC to S5126
239	05	6/2/2005	1	11/14/2006	V Sendelweck	RF-372	BN161	HWN	WMC change to S5123, HWN D007 added	6/6/2005	5	5	11/9/2006	Absence of 90 ml liner in RF waste (all IDCs)
240	05	6/2/2005	2	1/3/2006	V Sendelweck	RF-430	BN317 or BN510	Other	revised: WMC change to S5390 for IDCs 430 and 431 changed back to S3211 for IDCs 432 and 822	6/6/2005	7	7	11/9/2006	IDC 372 grit changed to S5123, HWN D007 added; rev 1 changed WMC to S5490 based on AK (e.g. walnut shells)
241	—	8/21/2008				Not used			NOT USED - CANCELLED AKR		0	0		revised 1/3/06 Resin IDCs 430&431 changed to S5390 and Cemented Resin IDCs 432&822 back to S3211
242	05	6/9/2005	2	11/29/2005	J Lance	IDC All	All	Unexpected Packaging	Use as is for plastic tie.	8/9/2005	1	1	3/12/2006	
243	05	6/9/2005			K Zbryk	MD-834-835	BN835	Other	Removal of spacer and relidding documented in Filter Event Screen	6/9/2005	1	1	7/31/2005	Plastic tie & folded & taped bag closure; includes Mound , Revised 8/9/05 R2
244	05	6/14/2005			S Carpenter	RF-330	BNINW222	IDC Change	Change IDC back to RF-330	6/16/2005	1	1	3/12/2006	Removal of spacer and relidding will not be recorded on the RTR?VE BDR
245	05	6/15/2005			V Sendelweck	RF-393	BN361	Other	Use as is for absorbent but change WMC to S3119	7/15/2005	5	5	11/9/2006	IDC change for container 10003189 back to original IDC RF-330 based on AK. AK Documentation updated.
246	05	6/18/2005	4	2/28/2006	C Abbott	MD-834,835	BN835	Unexpected Materials	1,1-dichloroethylene & PERC detected	6/22/2005	2	2	7/31/2005	Container 10015573 WMC should be changed to S3119.
247	05	6/21/2005	1	6/26/2005	C Abbott	MD-834,835	BN835	Unexpected Packaging	Use as is prior to 3-19, rework after	6/22/2005	0	0		1,1-dichloroethylene = radiolytic; add PERC to F001/F002 constituents. R4 2-28-06 supersedes.
248	05	6/24/2005			C Abbott	MD-834,835	BN835	Other	Resolve plywood spacer weight issue	6/24/2005	0	0		Plywood spacers as packaging and not waste.
249	05	6/29/2005	1	2/27/2006	C Abbott	MD-804	BN510	Unexpected Materials	Change IDC to MD-802	6/30/2005	0	0		Plywood spacers vary in weights dependent on size and thickness of spacer.
250	05	6/30/2005			C Abbott	RF-480	BN510	Other	No historical information in WTS	6/30/2005	3	3	7/31/2005	WMCs do not change - Containers 10033347 and 10033352 (NCRs 15789, 15746) R1 2/27/06 update Cas
251	05	7/9/2005			C Abbott	BN-510	Recon lot BN510.21	Other	Isopropyl alcohol detected >25% of lot	7/9/2005	0	0		Review of RTR and NDA data to determine appropriate identification of containers
252	05	7/10/2005			C Major	RF-374	BN510	IDC Change	Change IDC from RF-374 to RF-480	8/11/2005	2	2	11/9/2006	% detects of isopropyl alcohol for waste stream <25% - use data as is
253	—	8/21/2008				Not used			NOT USED - CANCELLED AKR		0	0		IDC change for container 10031632.
254	05	7/18/2005			C Major	RF-330	BN510	IDC Change	Change IDC from RF-330 to RF-480	7/18/2005	2	2	11/9/2006	
255	05	7/21/2005	1	8/28/2005	C Abbott	BN-508	BN510	Other	WMC change from S5420 to S5490 due to majority of material	7/21/2005	4	4	3/19/2006	Change IDC from RF-330 to RF-480
256	05	7/28/2005	1	9/3/2005	V Sendelweck	RF-432	BN317	Unexpected Materials	Liquid okay. Change WMC from S3211 to S5313	7/29/2005	3	3	9/3/2005	WMC changed from S55420 to S5490 to better describe the repackaged waste
257	05	7/29/2005			C Abbott	RF-393		Unexpected Materials	Use as is - no effect to IDC or WMC	8/11/2005	4	4	11/9/2006	<1 inch liquid okay. WMC changed from S3211 to S5313 R1 corrects to S5390
258	05	7/30/2005			V Sendelweck	RF-All	All RF Waste	Unexpected Materials	Use as is. No impact to IDC or WMC if absorbent <50%.	8/11/2005	2	2	11/9/2006	Oil Dri greater than 2 quarts in 3 containers.
259	05	9/21/2005			C Abbott	RF-374	BN510 or BN296	IDC Change	Change IDC from RF-374 to RF-480	9/22/2005	1	1	11/9/2006	Absence/variable quantities of absorbent acceptable - applies to both Oil-Dri and vermiculite
260	05	8/2/2005			C Abbott	MD-834,835	BN835	Other	Inconsistent identification of NHVOCs	8/11/2005	1	1	3/19/2006	Container 10031632 changed IDC 374 to 480- NCR 16050
261	—	8/21/2008				Not used			NOT USED - CANCELLED AKR		0	0		Lot 2 report states no NHVOCs; AK Summary identified acetone and methanol, no HWNs change required
262	05	8/5/2005			C Abbott	MD-802	BN510	IDC Change	Change IDC from MD-802 to MD-804	8/17/2005	0	0		
263	05	8/5/2005			C Abbott	MD-801	BN510	IDC Change	Change IDC from MD-801 to MD-802	8/18/2005	0	0		Container 10035007 found to have >50% various plastic in cardboard cartons and bagged..
264	05	9/24/2005			C Abbott	RF-330	BN510	IDC Change	Change IDC from RF-330 to RF-376	9/24/2005	0	0		Container 10033263 >50% leaded rubber gloves, containerized in sealed metal cans and bagged
265	05	8/5/2005			C Abbott	RF-374	BN510	IDC Change	Change IDC to RF-374	9/15/2005	0	0		Container 10005565 ccontents did not match IDC descrption. (NCR 5938).
266	—	8/21/2008				Not used			NOT USED - CANCELLED AKR		0	0		Container 10000914 was identified as containing metal RTR reflects blacktop and concrete NCR 7779
267	05	8/5/2005			C Abbott	RF-441	BN510	IDC Change	Change IDC from RF-441 to RF-374	9/23/2005	0	0		
268	05	8/5/2005			C Abbott	RF-374	BN243	IDC Change	Change IDC from RF-374 to RF-440	9/30/2005	0	0		Container 10002749 did not have glass it contained blacktop and concrete (NCR 5748)
269	—	8/5/2005			C Abbott	Not used			NOT USED - CANCELLED AKR		0	0		Container 10010317 - NCR 7762
270	05	8/5/2005			C Abbott	MD-803	BN510	IDC Change	Change IDC from MD-803 to MD-805	12/5/2005	0	0		Replaced with AKR-05-327
271	05	8/6/2005			C Abbott	RF-004	BN510	IDC Change	Change IDC from RF-004 to RF-337	8/11/2005	0	0		IDC did not match description of 803, review of video reflects an 805 NCR 14804
272	05	8/6/2005	1	11/23/2005	C Abbott	RF-440	BN510	IDC Change	Change IDC from RF-440 to RF-441	8/10/2005	0	0		Container had less than 50% special setup waste, empty poly bottles, teflon (NCR 5808)
273	—	8/21/2008				Not used			NOT USED - CANCELLED AKR		0	0		Container has less than 50% glass (non rashig rings), > 50% rashig rings NCR 6035 R1 added NCR 18768
274	05	9/22/2005	1	3/10/2007	C Abbott	MD-835	MD-835	Other	Verified IDC MD-835	9/23/2005	0	0		
275	05	10/8/2005			C Abbott	RF-441	BN296 OR BN510	IDC Change	Change IDC from RF-441 to RF-480	10/15/2005	0	0		Historical information was not noted in WTS. VE of container verified IDC (NCR 16688)
276	05	8/8/2005			V Sendelweck	MD-801	BN510	IDC Change	Change IDC from MD-801 to MD-802	8/18/2005	0	0		NCR 15198
														Containers 10033270 and 10033337 leaded rubber gloves NCRS 13295, 13296

AK Resolution Ledger

10/20/2014, 11:48 AM

AKR	AKR 'Year' (i.e., AKR-XX-###)	Date Initiated	Revision Number	Revision Date	Initiator	IDC	Waste Stream or Lot	Description of Discrepancy	Description of Resolution	Date Signed	Number of Action Items	Number of AIs completed	Date All AIs Incorporated	Comments
277	05	8/8/2005	1	2/15/2006	C Abbott	MD-All	All MD Waste	Unexpected Packaging	difference in absorbent & inner pkg.	8/11/2005	2	2	7/31/2005	use of absorbent material (0 to 56 pints) and 0 to 3 layers of confinement
278	05	8/18/2005			C Abbott	RF-336	BN510	Other	Container contents did not match RTR	10/8/2005	0	0		Container 10035352 held emtpy plastic bottles (NCR 12672
279	05	8/18/2005			C Abbott	MD-827		IDC Change	Container contents did not match RTR	10/15/2005	0	0		Container 10028576 held metal and metal debris (NCR 14834)
280	05	8/18/2005			C Abbott	MD-825		IDC Change	Container contents did not match RTR	10/25/2005	0	0		Container 10034595 held 100% plastic (NCR 16423)
281	05	8/18/2005	1	11/11/2005	V Sendelweck	RF-330	BN510	IDC Change	Change IDC from RF-330 to RF-374	8/19/2005	0	0		Container 10032591 held floor tile (NCR 17115) R1 added 10023673 (NCR 7784) issued 11/11/05
282	05	8/18/2005			V Sendelweck	RF-330	BN510	IDC Change	Change IDC from RF-330 to RF-337	8/19/2005	0	0		Container 10032580 held plastic (NCR 14521)
283	—	8/19/2005			V Sendelweck	Not used			NOT USED - CANCELLED AKR	8/21/2005	0	0		Replaced with AKR-05-327
284	05	8/19/2005			C Abbott	RF-330	BN510	IDC Change	Change IDC from RF-330 to RF-480	10/1/2005	0	0		Container 10035177 held metal cans (NCR 13870)
285	05	8/19/2005			V Sendelweck	RF-330	BN510	IDC Change	Change IDC from RF-330 to RF-337	3/11/2006	0	0		Container 10032907 held poly bottles (NCR 13896)
286	—	8/21/2008				Not used			NOT USED - CANCELLED AKR		0	0		
287	05	8/19/2005	1	2/27/2006	C Abbott	MD-All	All MD Waste	Unexpected Packaging	Unexpected presence of plywood spacers	8/20/2005	1	1	7/31/2005	Plywood spacers may be expected in any of the Mound drums (debris or sludge). R1 2/27/06 correct IDC
288	05	8/19/2005	2	7/9/2009	M. Johnson	BN-510	BN510	Unexpected Packaging	Add in catch pan weight for direct ship	8/24/2005	1	1	7/9/2009	Catch pan packaging on drums prior to compacting/placing in product drums - revised 10-25-05, need to revise RPT-06. Verified RPT-TRUW-05 was revised.
289	05	8/20/2005	1	11/29/2005	C Major	MD-802,847	BN510	Unexpected Materials	Unexpected presence of metal can	8/20/2005	3	3	11/9/2006	RTR - container 10032602 held a metal can; R1 containers (Mound)-Misc metal and glass include MD-847
290	05	9/23/2005			C Abbott	RF-337	BN510	IDC Change	Change IDC back to original	9/23/2005	0	0		NCR 10314, container 10015244
291	—	8/21/2008				Not used			NOT USED - CANCELLED AKR		0	0		
292	—	8/22/2005			C Abbott	Not used			NOT USED - CANCELLED AKR		0	0		
293	05	8/23/2005			C Abbott	RF-950	BN510	IDC Change	Change WMC from S5490 to S5300	8/24/2005	0	0		Change IDC from RF-950 to RF-337. CCP Container 10015210, NCR 5043. Drum transferred to CCP.
294	05	8/25/2005			C Abbott	RF-330	BN510	IDC Change	Change IDC from RF-330 to RF-337	8/25/2008	0	0		NCR 15194 for container 10031133, WMC change
295	—	8/25/2005			C Abbott	Not used	BN510	Unexpected Materials	NOT USED - CANCELLED AKR		0	0		
296	05	9/1/2005			C Major	MD-802	BN510	IDC Change	Change IDC from MD-825 to MD-804	9/2/2005	0	0		Container 10034740 needs IDC changed from MD-825 to MD-804.
297	05	9/3/2005			V Sendelweck	RF-330	BN510	IDC Change	Change IDC from RF-330 to RF-337	9/3/2005	1	1	3/19/2006	Container 10029196 (NCR 14876) RTR shows plastic bottles.
298	05	9/3/2005			V Sendelweck	RF-336	BN510	IDC Change	Change IDC from RF-336 to RF-440	9/3/2005	1	1	3/19/2006	Container 10035180 (NCR 13275) RTR shows glass bottles
299	05	9/6/2005	2	9/20/2005	M. Johnson	RF-432	BN317	Other	Change WMP designated in RPT-05	9/7/2005	2	2	9/9/2005	RPT-05 Rev 4 changed the WMP from organic matrix to plastic, will change back - rev2 issued 9-20-05
300	05	9/9/2005			C Abbott	MD-825	BN510	Unexpected Materials	Add inner pkgs of MD832	9/17/2005	3	3	11/9/2006	NCR 16230 - RPT 05 did not indicate inner packages of Hg (IDC MD-832) in containers of MD-825.
301	05	9/9/2005			C Abbott	RF-376	BN211	IDC Change	Retain original IDC of RF-376	9/9/2005	2	2	11/9/2006	IDC changed to IDC 361 by RTR - AK does not support - IDC 376 should be retatined
302	—	8/21/2008				Not used			NOT USED - CANCELLED AKR		0	0		
303	—	8/21/2008				Not used			NOT USED - CANCELLED AKR		0	0		
304	—	8/21/2008				Not used			NOT USED - CANCELLED AKR		0	0		
305	05	9/11/2005	1	10/5/2005	C Major	RF-330	BN510	IDC Change	Change IDC from RF-330 to RF-420	10/5/2005	0	0		Changed IDC of Container 10032906 in RTR05-00843 from RF-330 to RF-420 Rev 1
306	05	9/11/2005			C Major	RF-330	BN510	IDC Change	Change IDC from RF-330 to RF-335	9/12/2005	0	0		Changed IDC of Container 10028143 in RTR05-02604 from RF330 to RF335
307	—	8/21/2008				Not used			NOT USED - CANCELLED AKR		0	0		
308	05	9/12/2005			R. Osborne	RF-330	BN510	IDC Change	Change IDC from RF-330 to RF-337	9/12/2005	0	0		Container 10028862 - NCR 15247
309	—	9/12/2005			C Abbott	Not used	BN510	IDC Change	NOT USED - CANCELLED AKR		0	0		
310	05	9/12/2005			C Abbott	RF-336	BN510	IDC Change	Change IDC from RF-336 to RF-337	9/12/2005	0	0		Container 10035199 - NCR 13251
311	05	9/23/2005			M. Johnson	MD-Debris	BN510	IDC Change	Re: IDCs for CD containers	9/23/2005	1	1	2/19/2006	Container 1003497 NCR 13111 and all Mound debris with small inner packages. TRUW-5 updated
										9/23/2005	0	0		Filtered bag discovered as method of closure for container 10016436
312	05	9/22/2005			C Abbott	RF-376	BN211	Unexpected Packaging	Filtered bags	9/23/2005	2	2	11/9/2006	Identification of filtered bags used as packaging at RFP prior to shipment to Idaho.
313	05	9/23/2005			C Abbott	RF-All	All RF Waste	Unexpected Packaging	Use as is. AKR-05-312 NOT 313		0	0		
314	—	9/26/2005			C Abbott	Not used			NOT USED - CANCELLED AKR					
315	05	9/29/2005			V Sendelweck	RF-440	BN243	Other	Add chloromethane & cyclohexane as target analyte	9/29/2005	1	1	3/19/2006	BN 243.01 had chloromethane & cyclohexane >25% above PRQL added as target analyte for waste stream
316	05	10/1/2005	1	11/8/2007	C Abbott	BN-509	BN	Other	Provide initial AK	10/1/2005	2	2	11/15/2006	NCR 16839 Container 10045297 (assigned wrong IDC, WMC, etc). Provide AK and proper assignments
317	05	10/6/2005			C Abbott	RF-480	BN510	IDC Change	Change IDC from RF-480 to RF-490	10/8/2005	0	0		Container 10004919 not consistent with RF-480, change to RF-490 (NCR 15184)
318	05	10/7/2005			C Abbott	RF-330	BN510	IDC Change	Change IDC from RF-330 to RF-337	10/8/2005	0	0		Container 10028899 not consistent with RF-330 change to RF-337. (NCR 14945)
319	05	10/7/2005			C Abbott	RF-330	BN510	IDC Change	Change IDC from RF-330 to RF-337	10/8/2005	0	0		Container 10030280 not consistent with RF-330 change to RF-337 (NCR 15236)
320	05	10/12/2005			V Sendelweck	RF-337	BN510	IDC Change	Change IDC from RF-337 to RF-480	10/12/2005	0	0		Container 10005455 not consistent with RF-337 change to RF-480 (NCR 9317)
321	05	10/15/2005			V Sendelweck	RF-337	BN510	IDC Change	Change IDC from RF-337 to RF-374	10/15/2005	0	0		Container 10031367 not consistent with RF-337 change to RF-374 (NCR18174)
322	05	10/15/2005			V Sendelweck	RF-320	BN510	Other	Change back to original historical ID	11/20/2005	0	0		Container 10014766 historical changed to get a pack date, change back (NCR 17411)
323	05	10/21/2005	1	5/2/2007	C Abbott	RF-330	BN510	IDC Change	Change IDC from RF-330 to RF-374	10/21/2005	0	0		NCR 18379, 27203, containers 10014655, 10156586
324	05	10/22/2005			C Major	BN-603	BN510	IDC Change	Change IDC from BN-603 to BN-508	10/22/2005	0	0		Container 10064946 not consistent with BN-IDC 603. change to RF-508 (NCR 18645)
325	05	11/4/2005			C Abbott	RF-481	BN252	IDC Change	Change IDC from RF-481 to RF-339	11/4/2005	0	0		Container 10062418 - NCR 18382
326	05	11/6/2005	1	11/10/2005	C Abbott	MD-836		Other	Incorrect hist drum number correction	11/10/2005	0	0		Containers 10002215, 10002216, 10002217; NCRs 18381, 18488, and 18490
327	05	11/10/2005	4	9/15/2008	C Abbott	RF-330	BN510	IDC Change	Change IDC from RF-330 to RF-374	11/10/2005	0	0		10009071, 20480; 21702, 22352, 22717; 22719, 23551; 33249
328	05	11/10/2005	2	6/30/2006	C Abbott	RF-697		IDC Change	Standing AKR. Change IDC from RF-374 to RF-697 (WMC change)	6/30/2006	0	0		STANDING AKR FOR IDC CHANGES FROM RF-374 TO RF-697 (>50% DIRT)
329	05	11/14/2005			C Major	MD-847	BN510	Unexpected Packaging	Use as is. No impact to WMC	11/14/2005	3	3	11/9/2006	Container 10063947 has 4 layers of confinement.
330	05	11/14/2005			C Abbott	RF-330	BN510	IDC Change	Change IDC from RF-330 to RF-302	11/14/2005	1	1	11/9/2006	Container 10020478, NCR 6503
331	05	11/17/2005	1	3/1/2006	C Abbott	MD-All	All MD waste	Unexpected Packaging	Florco absorbent weight calculation	11/17/2005	2	2	11/9/2006	Calculated weight of Florco absorbent per pint REVISED
332	05	11/18/2005			V Sendelweck	MD-All	All MD waste	Unexpected Packaging	1.2 lb per 1/4 inch thickness	11/20/2005	2	2	11/9/2006	Plywood spacers - use 1.2 lb/quarter inch thickness, SDCR and RTR/VE training
333	05	11/19/2005			V Sendelweck	RF-440	BN510	IDC Change	Change IDC from RF-440 to RF-480	11/19/2005	0	0		Container 10056514 IDC change RF-440 to RF-480, NCR 18741
334	05	11/19/2005	1	1/7/2006	V Sendelweck	MD-848	BN304	IDC Change	Change IDC from MD-848 to MD-847	11/19/2005	0	0		Container 10064003, NCR 19118; 10035277 NCR 19343

AK Resolution Ledger

10/20/2014, 11:48 AM

AKR	AKR Year (i.e., AKR-XX-###)	Date Initiated	Revision Number	Revision Date	Initiator	IDC	Waste Stream or Lot	Description of Discrepancy	Description or Resolution	Date Signed	Number of Action Items	Number of AIs completed	Date All AIs Incorporated	Comments
335	05	11/27/2005			C Abbott	MD-825	BN510	IDC Change	Change IDC from MD-825 to MD-802	11/27/2005	0	0		Container 10034638 IDC change NCR 19303
336	05	11/27/2005			C Abbott	RF-370		IDC Change	Change IDC from RF-370 to RF-320	11/28/2005	0	0		Container 10052149 IDC change NCR 19226
337	05	11/28/2005			C Abbott	MD-826		IDC Change	Change IDC from MD-826/UN-00A to MD-836	11/28/2005	0	0		container 10026286 NCR 19206
338	05	11/28/2005			C Abbott	RF-481	BN252	IDC Change	Change IDC from RF-481 to RF-339	11/29/2005	0	0		container 10063776 NCR 18459
339	05	11/28/2005			C Abbott	MD-847		IDC Change	Change IDC from MD-847 to MD-848	11/29/2005	0	0		container 10063752 NCR 19173
340	05	11/28/2005			C Abbott	MD-803	BN304	IDC Change	Change IDC from MD-803 to MD-805	11/29/2005	0	0		container 10036168 NCR 19302bi-207
341	05	11/28/2005	2	6/29/2006	C Abbott	MD-834	BN835	Other	Standing AKR. Historical Drum number	12/15/2005	3	3	11/9/2006	STANDING AKR FOR BN835 HIST ID ISSUE RESOLUTIONS
342	---	11/29/2005			C Abbott	Not used		IDC Change	NOT USED - CANCELLED AKR		0	0		Replaced with AKR-07-500
343	05	11/30/2005	1	3/30/2006	C Abbott	RF-001	BNINW216	Other	Standing AKR. Historical Drum number. RF001, RF002, RF800	2/10/2006	1	1	11/9/2006	STANDING AKR FOR BNINW216 HIST ID ISSUE RESOLUTIONS
344	05	12/1/2005			C Abbott	MD-847	BN304	IDC Change	Change IDC from MD-847 to UN-00A	12/1/2005	0	0		
345	05	12/4/2005	1	3/28/2006	C Abbott	MD-835	BN835	Other	Assign correct Hist ID	12/4/2005	0	0		NCR 19187 Container 10035409
346	05	12/4/2005	1	12/13/2005	C Abbott	MD-848	BN304	IDC Change	Change IDC from MD-848 to MD-847	12/4/2005	0	0		10002675 NCR 19344 SDCR 674
347	05	12/4/2005			C Abbott	MD-847	BN304	IDC Change	Change IDC from MD-847 to MD-848	12/4/2005	0	0		10055352 NCR 19143
348	05	12/9/2005	1	2/2/2006	M. Johnson	MD-825	BN304	IDC Change	Change IDC from MD-825 to MD-805	12/9/2005	0	0		10035277 NCR 19343
349	---	8/21/2008				Not used			NOT USED - CANCELLED AKR		0	0		10034724 NCR 19434
350	---	12/12/2005				Not used			NOT USED - CANCELLED AKR		0	0		
351	05	12/31/2005	1	7/28/2008	C Major	MD-All	All MD Waste	Radionuclide	Use as is. No impact to WMC or HWN	12/31/2005	2	2	11/9/2006	U-232 found in MD-836 waste; it may also be found in other MD waste streams, revised to clarify AIs
352	---	2/12/2006			V Sendelweck	Not used		IDC Change	NOT USED - CANCELLED AKR		0	0		
353	05	2/20/2006			T Venneman	RF-371	BN161	HWN	Add D022, D028 and D029	2/20/2006	0	0		Container 10000655 (RF-371) had HSG hits for VOCs associated with D022, D028 and D029
354	06	2/20/2006			M. Johnson	MD-All	All MD Waste	Radionuclide	Use as is. No impact to WMC or HWN	2/28/2006	2	2	11/9/2006	Bi-207 detected in assay; however, AK source document also identifies Bi-207 can be expected at MD
355	06	2/21/2006			C Abbott	RF-970	BN510	IDC Change	Change IDC from RF-970 to RF-480 - Box	2/21/2006	0	0		NCR 20746 Container 10076993
356	06	2/21/2006			C Abbott	RF-330	BN510	IDC Change	Change IDC from RF-330 to RF-490 - Box	2/21/2006	0	0		NCR 20381 Container 10075551
357	06	2/24/2006			J Davis	RF-481	BN252	IDC Change	Change IDC from RF-481 to RF-339	2/24/2006	0	0		Container 10060576 not consistent with IDC RF-481. Change IDC to RF-339 (NCR 20520)
358	06	2/24/2006	2	12/6/2006	J Davis	MD-Debris	BN304	Unexpected Materials	Add description of previously unidentified items to Mound AK documents	2/24/2006	3	3	11/15/2006	Unexpected dense items ("pigs" or "source containers") identified in Mound BN304 debris drums
359	06	3/9/2006	3	3/17/2007	C Abbott	RF-330	BN510 BN296	IDC Change	Change IDC from RF-330 to RF-480	3/17/2006	0	0		NCR 20692 for 10032898, NCR 26529 for 10106617. It doesn't appear that Rev 2 of this AKR was ever issued.
360	06	3/13/2006	2	8/10/2006	R. Morris	RF-All	All RF Waste	Other	When any AKR requires a change to INEL-96/0280 or TRUW-56, appropriate changes will be included in waste management documents instead.	3/15/2006	0	0		AKR required changes to INEL-96/0280 or AK Summaries will be included in TRUW-56 or other docs. Revised (2) to say no changes to TRUW-56 either. All changes to waste management documents only.
361	06	3/16/2006			C Abbott	RF-336	BN510	IDC Change	RF IDCs assigned to re-packaged waste	3/16/2006	0	0		VE of one drum (RF-336) resulted in 3 drums assigned RF-IDCs 337& 336- prior to procedure change
362	06	3/17/2006			C Abbott	MD-825	BN304	IDC Change	Change IDC from MD-825 to MD-827	3/20/2006	0	0		NCR 14798 Container 10029105
363	06	3/20/2006			C Abbott	RF-480	BN510	IDC Change	Change IDC from UN-000 to RF-480	3/20/2006	0	0		Box 10076998 NCR 20523
364	06	3/20/2006			C Abbott	RF-330	BN510	IDC Change	Change IDC from RF-330 to RF-490	3/20/2006	0	0		Box 10078431 NCR 20526
365	06	3/24/2006			C Abbott	RF-371	BN510	IDC Change	Change IDC from RF-371 to RF-480	3/20/2006	0	0		NCR 21016 for container 10080111
366	06	3/24/2006			M. Johnson	MD-836	BN836	Unexpected Materials	Use as is. No impact to WMC or HWNs	3/27/2020	1	1	4/5/2006	RTR identification of plastic waste on top of cemented sludge in IDC MD-836 containers
367	---	8/21/2008				Not used			NOT USED - CANCELLED AKR		0	0		
368	06	3/29/2006	1	10/22/2008	C Abbott	MD-804	BN811	IDC Change	Change IDC from MD-804 to MD-811	3/29/2006	0	0		NCR 20505 container 10031412
369	06	3/29/2006			C Abbott	MD-836	BN804	IDC Change	Change IDC from MD-836 to MD-805	3/29/2006	0	0		NCR 20273 container 10054243
370	06	3/29/2006			C Abbott	MD-836	BN804	IDC Change	Change IDC from MD-836 to MD-810	3/29/2006	0	0		NCR 21362 container 10021976
371	06	3/31/2006			V Sendelweck	MD-803	BN304	IDC Change	Change IDC from MD-803 to MD-814	3/31/2006	0	0		NCR 20521 container 10043870
372	06	4/1/2006			J Davis	RF-480	BN296	IDC Change	Change IDC from RF-480 to R-337	4/1/2006	0	0		NCR 21123 container 10083569
373	---	8/21/2008				Not used			NOT USED - CANCELLED AKR		0	0		
374	06	4/3/2006			M. Johnson	MD-836	BN836	Unexpected Packaging	Use as is. No impact to WMC or HWNs	4/4/2006	1	1	4/5/2006	RTR identification of unexpected packaging (plastic drum bag) in IDC MD-836 containers
375	06	4/3/2006			M. Johnson	MD-836	BN836	Other	Use as is. No impact to WMC or HWNs	4/4/2006	1	1	4/5/2006	"Cement cap" and variable layers of solidification discovered during coring of IDC MD-836 drums
376	06	4/4/2006	25	10/21/2010	C Abbott	RF-002	BNINW216	Radionuclide	Standing AKR. Detection-137Cs (source)10054673	2/10/2007	3	3	2/10/2007	"Standing" AKR for containers identified by NDA as having 137Cs sources. To track AIs
377	06	4/8/2006			J Davis	RF-440	BN510	IDC Change	Change IDC from RF-440 to RF-441	4/9/2006	0	0		NCR 21410 for drum 10088701 and NCR 21412 for drum 10088578
378	06	4/8/2006			J Davis	MD-802	BN510	IDC Change	Change IDC from MD-802 to MD-810	4/9/2006	0	0		NCR 20142 for container 10022021
379	06	4/8/2006			J Davis	RF-004	BN510	IDC Change	Change IDC from RF-004 to RF-337	4/9/2006	0	0		NCR 21323 for container 10087871
380	06	6/12/2006			T Venneman	RF-480	BN510	Unexpected Materials	Large PCB items in box of RF-480	8/15/2006	3	3	8/15/2006	Box number 10078345 contained leaking large liquid filled PCB capacitors. Information not in AK records.
381	06	5/8/2006			R. Morris	MD-815	BN304	IDC Change	Change IDC from MD-815 to MD-804	5/8/2006	0	0		NCR 21761 10027343 & NCR 21764 10027344
382	06	5/11/2006			C Abbott	RF-001	BNINW216	Other	Hist ID not in WTS	5/11/2006	0	0		NCR 17098 10039233 - Add hist data to WTS
383	06	5/12/2006			C Abbott	MD-825	BN510	IDC Change	Change IDC from MD-825 to MD-824 - Box	5/12/2006	0	0		NCR 10295 10025562
384	---	9/4/2008				Not Used			NOT USED - CANCELLED AKR		0	0		
385	06	6/27/2006			R. Morris	RF-440	BN510	IDC Change	Change IDC from RF-440 to RF-480	6/27/2006	0	0		NCR 22244 for container 10090736
386	06	6/29/2006			C Abbott	UNK-000	BN510	IDC Change	Change IDC from UN-000 to RF-480 - Box	7/20/2006	0	0		NCR 22073 for container 10091156 Box
387	06	6/29/2006			C Abbott	RF-374	BN211	IDC Change	Change IDC from RF-374 to RF-490	8/2/2006	0	0		NCR 22187 10095600

AK Resolution Ledger

10/20/2014, 11:48 AM

AKR	AKR Year (i.e., AKR-XX-###)	Date Initiated	Revision Number	Revision Date	Initiator	IDC	Waste Stream or Lot	Description of Discrepancy	Description or Resolution	Date Signed	Number of Action Items	Number of Ats completed	One Air Als Incorporated	Comments
388	06	6/29/2006			C Abbott	RF-480	BN243	IDC Change	Change IDC from RF-480 to RF-440	8/2/2006	0	0		NCR 22263 10097417
389	06	6/29/2006			J Davis	RF-339	BN510	IDC Change	Change IDC from RF-339 to RF-330	8/2/2006	0	0		NCR 22599 for container 10101791
390	06	6/29/2006			R. Morris	RF-440	BN510	IDC Change	Change IDC from RF-440 to RF-337	8/8/2006	0	0		NCR 22600 10104588
391	06	7/17/2006			T Venneman	UNK-000	BN480	IDC Change	Change IDC from UN-000 to RF-480 - Box	7/20/2006	0	0		NCR 22116 for containers 10091268 - Box
392	06	7/17/2006			T Venneman	RF-330	BN296	IDC Change	Change IDC from RF-330 to RF-480 -Box	7/20/2006	0	0		NCR 20913 for container 10079912 - Box
393	06	7/17/2006			T Venneman	RF-480	BN296	IDC Change	Change IDC from RF-480 to RF-336	7/20/2006	0	0		NCR 22671 for container 10080121 - Box
394	06	7/17/2006	1	10/9/2006	T Venneman	UNK-000	BN211	IDC Change	Change IDC from UN-000 to RF-490	7/20/2006	0	0		NCR 22158 and for container 10090549 - Box
395	06	8/3/2006	1	10/22/2008	R. Morris	MD-825	BN304	IDC Change	Change IDC from MD-825 to MD-811, S5000 to S3000	8/10/2006	1	1	8/10/2006	NCR 22282 for container 10034610 (VVE06-00089)
396	06	7/24/2006	1	7/31/2006	C Abbott	RF-480	BN243	IDC Change	Change IDC from RF-480 to RF-440	7/31/2006	0	0		Multiple NCRs for multiple containers, WMC change
397	06	7/24/2006			C Abbott	RF-440	BN296	IDC Change	Change IDC from RF-440 to RF-480	7/24/2006	0	0		NCR 22697 for container 10097507
398	06	8/3/2006			R. Morris	RF-339	BN252	IDC Change	Change IDC from RF-339 to RF-335	8/3/2006	0	0		NCR 22949 for container 10108775
399	06	8/8/2006			R. Morris	RF-338	BN211	IDC Change	Change IDC from RF-338 to RF-490, no WMC change	9/20/2006	0	0		NCRs 22818 and 22904 for container 10088727 and 10100045
400	—	8/8/2006			C Abbott	Not used	BN252	IDC Change	NOT USED - CANCELLED AKR		0	0		Replaced with AKR-06-398
401	06	8/8/2006			R. Morris	RF-480	BN296	IDC Change	Change IDC from RF-480 to RF-374	8/9/2006	0	0		NCR 22990 for container 10111382
402	—	8/14/2006			R. Morris	Not used		IDC Change	NOT USED - CANCELLED AKR		0	0		
403	—	8/15/2006			R. Morris	Not used	BN296	IDC Change	NOT USED - CANCELLED AKR		0	0		
404	06	8/15/2006			R. Morris	RF-335	BN211	IDC Change	Change IDC from RF-335 to RF-338, no WMC change	8/15/2006	0	0		NCR 22767 for container 10100366
405	06	8/21/2006	1	8/28/2006	T Venneman	RF-CCP	CCP waste streams	Other	Change of WMCs	8/21/2006	0	0		Change of WMCs in WTC to reflect WMCs assigned by CCP for waste streams ID-RF-S5100-A and ID-RF-S5300-A
406	—	8/21/2008				Not used			NOT USED - CANCELLED AKR		0	0		
407	06	9/14/2006	1	6/7/2007	M. Johnson	RF-374	BN374	Other	Change of WMC from S5420 to S5490	9/14/2006	3	3	7/17/2007	NCR 23756 to document change of WMC for IDC 374 from S5420 to S5490. NCR required per Form 1070
408	06	9/18/2006	1	10/29/2008	M. Johnson	RF-371	BN161	IDC Change	Change IDC from RF-371 to RF-374	10/2/2006	1	1	10/26/2006	NCR 23749 for container 10107483, NCR 23821 for container 10095610, NCR 24031 for 11 other containers
409	06	9/21/2006			M. Johnson	RF-371	BN161	IDC Change	Change IDC from RF-371 to RF-370	10/5/2006	0	0		NCR 23822 for container 10110783
410	06	10/2/2006	10	5/30/2007	M. Johnson	RF-480	BN296	IDC Change	Standing AKR. Change IDC from RF-480 to RF-337	10/4/2006	2	2	8/14/2007	Standing AKR (IDC 480 - primarily respirators) NCRs 23895, 25264, 25489, 26545, etc.
411	06	10/4/2006			M. Johnson	RF-371	BN161	IDC Change	Change IDC from RF-371 to RF-697	10/4/2006	1	1	10/26/2006	NCR 23932 for container 10088762, revise RPT-05 to identify soil in IDC RF-371
412	06	10/12/2006			C Abbott	RF-330	BN510	IDC Change	Change IDC from RF-330 to RF-337	10/14/2006	0	0		NCR 24158 for container 10097495
413	06	10/16/2006			C Abbott	RF-330	BN510	IDC Change	Change IDC from RF-330 to RF-337	10/16/2006	0	0		NCR 23991 for container 10089179
414	06	10/19/2006			C Abbott	RF-330	BN510	IDC Change	Change IDC from RF-330 to RF-337	10/19/2006	0	0		NCR 24168 for container 10000241
415	06	10/19/2006			C Abbott	RF-440	BN510	Other	Assign RF-374 to container w/historical ID issue	10/23/2006	0	0		Drum mistakenly sent to CCP, who characterized it as a 330 but contents were floor tiles NCR 23616
416	06	10/23/2006	10	6/22/2007	C Abbott	Boxes	BN510	IDC Change	Standing AKR. Various changes of IDC for boxes	7/3/2007	0	0		Standing AKR: Boxes with NCRs for IDC change - grouped - various IDCs; Superceded by AKR-07-493
417	06	10/26/2006	1	11/13/2006	C Abbott	MD-836	BN836	IDC Change	Change IDC from MD-835 to MD-836	1/26/2006	0	0		NCR 24328 for container 10019817
418	06	10/30/2006			C Abbott	RF-337	BN510	IDC Change	Change IDC from RF-337 to RF-374	10/30/2006	0	0		NCR 23376 for container 10102604
419	06	10/30/2006	14	8/7/2007	C Abbott	MD-848		IDC Change	Standing AKR. Change IDC from MD-848 to MD-847	3/3/2007	0	0		Standing AKR: See AKR R1 for list of NCRs and corresponding containers.
420	06	10/30/2006			C Abbott	RF-440		IDC Change	Change IDC from RF-440 to RF-441	10/30/2006	0	0		NCR 24274 10120398 WG; NCR23840 10116582 WG and NCR 23415 10111281 LLD
421	06	10/30/2006	1	12/12/2006	C Abbott	RF-339		IDC Change	Change IDC from RF-339 to RF-330	10/30/2006	0	0		NCR 24172 for container 10106805
422	06	10/30/2006	2	5/1/2007	C Abbott	RF-480	BN243	IDC Change	Change IDC from RF-480 to RF-440	10/30/2006	0	0		NCR 23995, 27406 for container 10112085, 10146799
423	06	12/11/2006			M. Johnson	RF-002	BNINW216	Unexpected Materials	Address bottle of waste buried in sludge	12/12/2006	1	1	4/4/2007	RTR recording for container 10109346, identify small containers buried in IDC RF-002
424	06	12/13/2006	1	9/10/2007	M. Johnson	RF-374	BN510	Other	Retain IDC RF-374, reject RTR change to 697	12/14/2006	0	0		NCR 23359 for container 10048730
425	—	1/11/2007			C Abbott	Not used	BN510	IDC Change	NOT USED - CANCELLED AKR		0	0		
426	07	3/7/2007			C Abbott	RF-339	BN510	Other	Address historical data issue	3/7/2007	0	0		NCR 22057 for container 10095988
427	06	10/31/2006			M. Johnson	RF-368,370	BN510	Other	Change WMC from S5123 to S5190	11/14/2006	0	0		WMC change for crucible debris waste (IDCs 368 and 370)
428	06	10/31/2006			M. Johnson	RF-391,392	BN510	Other	Change WMC from S5129 to S5190	11/14/2006	0	0		WMC change for crucible and sand debris waste (IDCs 391 and 392)
429	06	10/31/2006			M. Johnson	RF-950	BN510	Other	Change WMC from S5112 to S5490	11/14/2006	0	0		WMC change for RF debris waste that is heterogeneous based on information in AK
430	06	11/1/2006			C Abbott	RF-440		IDC Change	Change IDC from RF-440 to RF-337	11/15/2006	0	0		NCR 24270 for container 10109201
431	—	11/15/2006			C Abbott	Not used		IDC Change	NOT USED - CANCELLED AKR		0	0		
432	06	11/15/2006	6	7/13/2010	C Abbott	RF-481	BN252	IDC Change	Change IDC from RF-481, RF-480 to RF-339	9/6/2007	1	1	10/8/2007	Multiple NCRs for multiple containers, WMC change
433	06	11/15/2006			C Abbott	RF-440		IDC Change	Change IDC from RF-440 to RF-336	11/22/2006	0	0		NCR 24455 for container 10118907
434	07	2/3/2007	10	4/25/2007	T Venneman	RF-440		IDC Change	Standing AKR. Change IDC from RF-440 to RF-441 or RF-442	2/3/2007	0	0		Standing" AKR for containers identified as RF440 and IDC change to RF-441 or RF-442. WMC change S5122 to S5100
435	—	8/21/2008				Not used			NOT USED - CANCELLED AKR		0	0		
436	07	2/6/2007			C Abbott	RF-463	BN296	Other	Change IDC from RF-463 to RF-480 - DS	3/21/2007	0	0		NCR 25710, 10135851
437	07	2/6/2007	1	2/8/2007	T Venneman	RF-004	BN004	IDC Change	Change IDC from RF-004 to RF-337, WMC change	2/7/2007	0	0		RTR07-00601 - container 10124390, WMC change
438	07	2/6/2007			R. Morris	RF-371	BN161	IDC Change	Change IDC from RF-371 to RF-374	2/7/2007	1	1	10/8/2007	NCR 25802, revise RPT-6 for generation dates for RF-374
439	07	2/8/2007			R. Morris	RF-371	BN161	IDC Change	Change IDC from RF-371 to RF-374	2/8/2007	0	0		NCR 25919 for container 10127008
440	—	2/9/2007			P Fetzer	Not used	BN243	IDC Change	NOT USED - CANCELLED AKR		0	0		
441	07	2/22/2007	9	9/21/2007	C Abbott	RF, MD	BN510	IDC Change	Standing AKR. Accepting IDC changes for debris to debris-510	9/6/2007	1	1	10/8/2007	Standing AKR for debris to the super compactor 510, revise pack date range. See AKR for NCRs and container numbers
442	07	2/26/2007			T Venneman	RF-480	BN510	IDC Change	Change IDC from RF-480 to RF-490	2/27/2007	0	0		NCR 25988 for container 10124685, WMC change RF-480 to RF-490
443	07	2/26/2007	1	12/10/2007	T Venneman	RF-320	BN510	IDC Change	Change IDC from RF-320 to RF-337	2/27/2007	0	0		Multiple NCRs for multiple containers, WMC change
444	07	3/14/2007			M. Johnson	RF-374	BN510	IDC Change	Change IDC from RF-374 to RF-432	3/15/2007	0	0		NCR 23025 for container 10100992, IDC change - SCG change

AK Resolution Ledger

10/20/2014, 11:48 AM

AKR	AKR Year (i.e., AKR-XX-###)	Date Initiated	Revision Number	Revision Date	Initiator	IDC	Waste Stream or Lot	Description of Discrepancy	Description or Resolution	Date Signed	Number of Action Items	Number of ARs completed	Date All ARs Incorporated	Comments
445	07	3/5/2007			R. Morris	RF-330	BN510	IDC Change	Change IDC from RF-330 to RF-375	3/26/2007	0	0		NCR 26600 for container 10124377, SCG change
446	—	3/7/2007			C Abbott	Not used	BN510 or BN252	IDC Change	NOT USED - CANCELLED AKR		0	0		
447	07	3/12/2007			R. Morris	MD-847	BN304	IDC Change	Change IDC from MD-847 to MD-835	3/12/2007	0	0		NCR 26239 for container 10146952, WMC change
448	07	3/19/2007			T Venneman	RF-336	BN510	IDC Change	Change IDC from RF-336 to RF-421	3/26/2007	0	0		NCR 26590 for container 10057937, WMC change
449	07	3/26/2007			R. Morris	RF-481	BN296	IDC Change	Change IDC from RF-481 to RF-337	3/26/2007	0	0		NCR 26237 for container 10145934, WMC change
450	07	3/27/2007			R. Morris	RF-480	BN296	IDC Change	Change IDC from RF-480 to RF-337	3/27/2007	0	0		NCR 26672 for container 10146860, WMC change - Not respirators
451	07	3/28/2007			R. Morris	RF-371	BN161	IDC Change	Change IDC from RF-371 to RF-337	4/5/2007	0	0		NCR 26913 for container 10153055, WMC change
452	07	4/19/2007	1	5/1/2007	R. Morris	RF-371	BN161	IDC Change	Change IDC from RF-371 to RF-480	4/19/2007	0	0		NCR 27147 for container 10154633, WMC change
453	07	4/11/2007			T Venneman	RF-330	BN510	IDC Change	Change IDC from RF-330 to RF-970	6/20/2007	1	1	10/8/2007	NCR 28186 for container 10093731, WMC change, revise RTP-56 for pack date range
454	07	4/19/2007			R. Morris	RF-371	BN161	IDC Change	Change IDC from RF-371 to RF-374	4/19/2007	0	0		NCR 27141 for container 10153848, WMC change
455	—	4/13/2007			P Fetzer	Not used	BN004	IDC Change	NOT USED - CANCELLED AKR		0	0		
456	07	4/16/2007			R. Morris	MD-847	BN304	IDC Change	Change IDC from MD-847 to MD-835	4/16/2007	0	0		NCR 26333 for container 10145638, IDC change from MD847 to MD848.
457	07	4/16/2007			R. Morris	RF-336	BN296	IDC Change	Change IDC from RF-336 to RF-480	4/16/2007	0	0		NCR 27054 for container 10127005, WMC change
458	07	4/19/2007	1	5/21/2007	R. Morris	RF-330	BN510	IDC Change	Change IDC from RF-330 to RF-490	4/19/2007	0	0		Multiple NCRs for multiple containers, WMC change
459	07	4/24/2007			R. Morris	RF-330	BN510	IDC Change	Change IDC from RF-330 to RF-480	4/24/2007	0	0		NCR 27134 for container 10153865, WMC change
460	07	4/25/2007	1	5/2/2007	T Venneman	RF-330	BN510	IDC Change	Change IDC from RF-330 to RF-337	4/25/2007	0	0		Multiple NCRs for multiple containers, WMC change
461	07	4/25/2007			R. Morris	RF-480	BN296	IDC Change	Change IDC from RF-480 to RF-337	4/25/2007	0	0		NCR 27288 for container 10156343, WMC change
462	07	4/25/2007			T Venneman	RF-330	BN510	IDC Change	Change IDC from RF-330 to RF-480	4/25/2007	0	0		NCR 27179 for container 10150436, WMC change
463	07	4/26/2007	2	6/5/2007	R. Morris	RF-330	BN510	IDC Change	Change IDC from RF-330 to RF-970	4/26/2007	0	0		NCR 27307 for container 10153583, WMC change
464	07	4/30/2007			J Collins	RF-480	BN211	IDC Change	Change IDC from RF-480 to RF-338	4/30/2007	0	0		NCR 24610 for container 10117016. VE recommended a change to RF-360. AK recommends a change to RF-338.
465	07	4/30/2007			R. Morris	RF-337	BN510	IDC Change	Change IDC from RF-337 to RF-339	4/30/2007	0	0		NCR 27369 for container 10156518, WMC change
466	07	5/1/2007			R. Morris	RF-330	BN510	IDC Change	Change IDC from RF-330 to RF-335	5/1/2007	0	0		NCR 27383 for container 10146965
467	07	5/1/2007	1	1/3/2008	R. Morris	RF-440	BN243	IDC Change	Change IDC from RF-440 to RF-480	5/1/2007	0	0		Multiple NCRs and Containers, WMC change, LLD
468	07	5/7/2007			R. Morris	RF-330	BN510	IDC Change	Change IDC from RF-330 to RF-480	5/7/2007	0	0		NCR 27439 for container 10160292, WMC change, LLD
469	07	5/8/2007	2	6/7/2007	M. Johnson	RF-338	BN211	IDC Change	Change IDC from RF-338 to RF-374	5/8/2007	0	0		NCR 27070 for container 10153843, WMC change, LLD
470	07	5/8/2007			M. Johnson	RF-330	BN510	IDC Change	Change IDC from RF-330 to RF-480	5/8/2007	0	0		NCR 27076 for container 10153825, WMC change, TRU with prohibited liquids
471	07	5/8/2007			R. Morris	RF-371	BN161	IDC Change	Change IDC from RF-371 to RF-337	5/8/2007	0	0		NCR 27149 for container 10154587, WMC change
472	07	5/8/2007			T Venneman	RF-330	BN510	IDC Change	Change IDC from RF-330 to RF-300	5/9/2007	0	0		NCR 26066 for container 10136786, WMC change
473	07	5/8/2007			T Venneman	RF-463	BN252	IDC Change	Change IDC from RF-463 to RF-330	5/10/2007	0	0		NCR 26174 for container 10136834, WMC change
474	07	5/15/2007			T Venneman	RF-440	BN243	IDC Change	Change IDC from RF-440 to RF-441	5/15/2007	0	0		NCR 27545 for container 10126368, WMC change
475	07	5/15/2007			R. Morris	RF-480	BN211	IDC Change	IDC change from RF-480 to RF-441	5/15/2007	0	0		NCR 27589 for container 10151777, WMC change
476	07	5/15/2007	1	5/29/2007	R. Morris	RF-337	BN510	IDC Change	IDC change from RF-337 to RF-374	5/15/2007	0	0		NCR 27573 for container 10151503, WMC change
477	07	5/15/2007	9	11/15/2007	R. Morris	RF-330	BN510	IDC Change	Standing AKR. Change IDC from RF-330 to RF-480	5/15/2007	1	1	10/8/2007	Standing AKR, WMC change, revise prefix dates, continued in AKR-07-532
478	07	5/21/2007	10	8/25/2009	R. Morris	RF-330	BN510	IDC Change	Standing AKR. Change IDC from RF-330 to RF-374	5/21/2007	0	0		Multiple NCRs and Containers, WMC change
479	07	5/22/2007	9	1/3/2008	T Venneman	RF-330	BN510	IDC Change	Standing AKR. Change IDC from RF-330 to RF-970	5/23/2007	2	2	10/8/2007	Multiple NCRs and Containers, WMC change, revise RPT-56 for prefix information
480	07	5/23/2007			C Abbott	SD-704		IDC Change	Change IDC from SD-706 to SD-704	5/29/2007	0	0		Incorrect data (i.e., IDC & WMC) entered for an ARP sludge waste drum to be cored.
481	07	5/24/2007	1	10/11/2007	T Venneman	RF-330	BN510	IDC Change	Change IDC from RF-330 to RF-440	5/30/2007	0	0		Multiple NCRs for multiple containers, WMC change
482	07	6/7/2007			R. Morris	RF-480	BN296	IDC Change	Change IDC from RF-480 to RF-360	6/7/2007	1	1	10/8/2007	NCR 26834 for container 10153057, WMC change, add RF-360 to prefix 0031
483	07	5/31/2007			R. Morris	RF-371	BN161	IDC Change	Change IDC from RF-371 to RF-090	5/31/2007	1	1	10/8/2007	NCR 27447 for container 10159926, WMC change, LLD, change pack date range for RF-990
484	07	5/31/2007			T Venneman	RF-371	BN161	IDC Change	Change IDC from RF-371 to RF-374	6/4/2007	0	0		NCR 27072 for container 10153225, WMC change
485	07	6/8/2007	10	11/9/2009	T Venneman	MD-848	BN304	IDC Change	Standing AKR. Change IDC from MD-848 to MD-847	8/2/2007	0	0		Multiple NCRs for multiple containers. No WMC change
486	07	6/12/2007			R. Morris	RF-336	BN510	IDC Change	Change IDC from RF-336 to RF-292	6/12/2007	1	1	10/8/2007	NCR 27996 for container 10107397, WMC change, prefix date range extension
487	07	6/13/2007	6	1/3/2008	R. Morris	RF-480	BN296	IDC Change	Standing AKR. Change IDC from RF-480 to RF-337	6/13/2007	1	1	10/8/2007	New Standing AKR - replaces AKR-06-410, WMC change, LLD, revise prefix date range
488	07	6/14/2007			R. Morris	RF-336	BN510	IDC Change	Change IDC from RF-336 to RF-337	6/14/2007	0	0		Multiple NCRs for multiple containers, LLD
489	07	6/19/2007			R. Morris	RF-440	BN243	IDC Change	Change IDC from RF-440 to RF-441	6/19/2007	0	0		NCR 28086 for container 10088695, WMC change
490	07	6/21/2007	10	3/26/2008	R. Morris	RF-371	BN161	IDC Change	Change IDC from RF-371 to RF-480	6/21/2007	0	0		Multiple NCRs for multiple containers, WMC change
491	07	6/25/2007	9	1/21/2008	R. Morris	RF-440	BN243	IDC Change	Standing AKR. Change IDC from RF-440 to RF-441	6/25/2007	2	2	10/8/2007	New Standing AKR - replaces AKR-07-434, WMC change
492	07	6/25/2007			T Venneman	RF-330	BN510	IDC Change	Change IDC from RF-330 to RF-970	6/25/2007	1	1	6/25/2007	NCR 28100 for container 10162633, WMC change.
493	07	6/25/2007	11	11/8/2007	C Abbott	Boxes	BN510	IDC Change	Standing AKR. Various changes of IDC for boxes	7/10/2007	0	0		Supercedes AKR-06-416; Standing AKR: Boxes with NCRs for IDC change - grouped - various IDCs
494	07	7/2/2007	2	8/20/2009	R. Morris	RF-336	BN510	IDC Change	Change IDC from RF-336 to RF-374	7/2/2007	0	0		Multiple NCRs and containers, WMC change
495	07	7/3/2007	9	1/31/2008	R. Morris	RF-336	BN510	IDC Change	Change IDC from RF-336 to RF-480	7/3/2007	0	0		Standing AKR, WMC change
496	07	7/9/2007	1	2/11/2008	R. Morris	RF-336	BN510	IDC Change	Change IDC from RF-336 to RF-970	7/9/2007	0	0		Multiple NCRs and containers, WMC change
497	07	7/10/2007	1	8/7/2007	R. Morris	RF-330	BN510	IDC Change	Change IDC from RF-330 to RF-300	7/10/2007	0	0		NCR 28689 for container 10119563, WMC change; R1 - NCR 29055 for container 10095560
498	07	7/12/2007	2	7/19/2011	R. Morris	RF-336	BN510	IDC Change	Standing AKR. Change IDC from RF-336 to RF-360	7/12/2007	1	0		Multiple NCRs for multiple containers, WMC change
499	07	7/12/2007			R. Morris	RF-300	BN510	IDC Change	Change IDC from RF-300 to RF-336	7/12/2007	0	0		NCR 28732 for container 10156306, WMC change, LLD
500	07	7/12/2007			R. Morris	RF-292	BN222	IDC Change	Change IDC from UN-00A toRF-336	7/12/2007	0	0		NCR 18877 for container 10056358, WMC change, LLD, VEC, temporarily passed through UN-00A
501	—	8/21/2008				Not used			NOT USED - CANCELLED AKR		0	0		

AK Resolution Ledger

10/20/2014, 11:48 AM

AKR	AKR Year (i.e., AKR-XX-###)	Date Initiated	Revision Number	Revision Date	Initiator	IDC	Waste Stream or Lot	Description of Discrepancy	Description of Resolution	Date Signed	Number of Action Items	Number of AIs completed	Date All AIs Incorporated	Comments
502	—	9/4/2008				Not used			NOT USED - CANCELLED AKR		0	0		
503	07	7/23/2007			R. Morris	RF-336	BN510	IDC Change	Change IDC from RF-336 to RF-375	7/23/2007	0	0		NCR 28931 for container 10063996, WMC change
504	07	7/24/2007	7	3/3/2014	R. Morris	RF-337	BN510	IDC Change	Change IDC from RF-337 to RF-480	7/24/2007	0	0		Multiple NCRs for multiple containers, WMC change
505	07	8/6/2007	2	1/21/2009	R. Morris	RF-374	BN510	IDC Change	Change IDC from RF-374 to RF-292	8/21/2007	0	0		Standing AKR, WMC Change, VEC
506	07	8/6/2007			R. Morris	RF-370	BN510	IDC Change	Change IDC from RF-370 to RF-970	8/7/2007	0	0		NCR 28935 for container 10170260, WMC change
507	07	8/7/2007	2	11/24/2008	R. Morris	RF-371	BN161	IDC Change	Change IDC from RF-371 to RF-375	8/7/2007	2	2	10/8/2007	Multiple NCRs for multiple containers, WMC change, SCG change, add IDC RF-375 to prefix 0089
508	07	8/14/2007			R. Morris	RF-300	BN510	IDC Change	Change IDC from RF-300 to RF-480	8/14/2007	0	0		NCR 30104 for container 10054117, WMC change
509	—	9/10/2007			T Venneman	Not used	BN510	IDC Change	NOT USED - CANCELLED AKR		0	0		
510	07	9/12/2007			T Venneman	RF-337	BN510	IDC Change	Change IDC from RF-337 to RF-328	9/12/2007	0	0		NCR 28814, for container 10089620, WMC change
511	07	9/20/2007	10	1/14/2008	R. Morris	RF-371	BN161	IDC Change	Standing AKR.Change IDC from RF-371 to RF-960	9/20/2007	0	0		Standing AKR, WMC change
512	07	9/20/2007	2	8/2/2011	R. Morris	RF-371	BN161	IDC Change	Change IDC from RF-371 to RF-374	9/20/2007	0	0		Multiple NCRs and Containers, WMC change
513	07	9/20/2007	1	9/26/2007	C Abbott	RF-371	BN510	IDC Change	Change IDC from RF-330 to RF-371	9/20/2007	0	0		NCR 27418 for container 10160098, WMC change
514	07	9/20/2007			M. Johnson	BN-505	BN511	IDC Change	Change IDC from BN-505 to BN-511	10/10/2007	0	0		NCR 35067 for container 10128912, IDC change
515	07	9/27/2007			P Fetzer	RF-376	BN211	Radionuclide	Use as is. No impact to WMC or HWN	9/27/2007	0	0		Cs present in container 10000386, IDC 376, Prefix 0041
516	07	10/3/2007	7	5/4/2011	R. Morris	RF-330	BN510	IDC Change	Change IDC from RF-330 to RF-490	10/3/2007	0	0		Standing AKR, WMC change
517	07	10/8/2007	9	6/23/2009	R. Morris	RF-371	BN161	IDC Change	Change IDC from RF-371 to RF-337	10/8/2007	0	0		Multiple NCRs and Containers, WMC change
518	07	10/10/2007			R. Morris	RF-463	BN252	IDC Change	Change IDC from RF-463 to RF-440	10/10/2007	0	0		NCR 35052 for container 10183999, WMC change
519	07	10/11/2007	1	5/9/2008	J Collins	RF-337	BN510	IDC Change	Change IDC from RF-337 to RF-960	10/11/2007	0	0		NCR 35076 for container 10184032, WMC change; second change to 10184032; supercedes AKR-07-517, NCR 39173 for container 10212761
520	07	10/15/2007			R. Morris	RF-337	BN510	IDC Change	Change IDC from RF-337 to RF-490	10/15/2007	0	0		NCR 35061 for container 10184019, WMC change
521	07	10/16/2007	1	4/13/2007	T Venneman	RF-337	BN510	IDC Change	Change IDC from RF-337 to RF-371	10/17/2007	0	0		NCR 35094 for container 10184741, WMC change
522	07	10/22/2007			M. Johnson	RF-001	BNINW216	Other	Use as is. Statistics applied to WS	10/25/2007	0	0		bis(2-ethylhexyl)phthalate UCL90 above PRQL for Lot 17; below PRQL when caclucated across entire waste stream
523	07	10/29/2007	11	9/13/2010	T Venneman	RF-480	BN296	IDC Change	Change IDC from RF-480 to RF-337	10/31/2007	0	0		Standing AKR, WMC change
524	07	10/30/2007	5	10/29/2012	T Venneman	RF-330	BN510	IDC Change	Change IDC from RF-330 to RF-440	6/19/2008	0	0		Multiple NCRs and containers, IDC change
525	07	10/30/2007			R. Morris	RF-337	BN510	IDC Change	Change IDC from RF-337 to RF-375	10/30/2007	1	1	1/21/2008	NCR 35266 for container 10187666, WMC change; extend prefix date range for RF-375
526	07	10/31/2007	9	4/19/2010	T Venneman	RF-371	BN161	IDC Change	Change IDC from RF-371 to RF-330	10/31/2007	0	0		Multiple NCRs and containers, WMC change
527	07	11/1/2007	7	2/2/2012	R. Morris	RF-371	BN161	IDC Change	Change IDC from RF-371 to RF-990	7/7/2008	3	3	1/21/2008	Standing AKR, Multiple NCRs and containers, WMC change
528	07	11/13/2007			R. Morris	RF-371	BN161	IDC Change	Change IDC from RF-371 to RF-360	11/19/2007	0	0		NCR 35774 for container 10190643, WMC change
529	07	11/13/2007	3	1/25/2011	R. Morris	RF-480	BN296	IDC Change	Change IDC from RF-480 to RF-330	11/13/2007	0	0		Multiple NCRs for multiple containers, WMC change
530	07	11/26/2007	1	3/3/2008	R. Morris	RF-440	BN243	IDC Change	Change IDC from RF-440 (RF-480) to RF-330	11/26/2007	0	0		NCR 35794 for container 10190315, WMC change
531	—	11/26/2007				Not used			NOT USED - CANCELLED AKR		0	0		
532	07	11/27/2007	6	12/16/2008	R. Morris	RF-330	BN510	IDC Change	Standing AKR.Change IDC from RF-330 to RF-480	11/27/2007	0	0		Standing AKR, WMC change, continues AKR-07-477
533	07	11/27/2007	3	11/18/2008	R. Morris	RF-480	BN296	IDC Change	Change IDC from RF-480 to RF-960	11/27/2007	1	1	1/14/2008	Multiple NCRs for multiple containers, WMC change; extend prefix date range for RF-960
534	07	11/28/2007	10	5/9/2008	P Fetzer	Boxes	BN510	IDC Change	Standing AKR. Various changes of IDC for boxes w/known gen	11/28/2007	0	0		Standing AKR: Boxes w/NCRs for IDC change various IDCs. Separate from 493-on hold for unknown generators
535	07	11/28/2007			M. Johnson	BN-510	BN510	Other	Use as is - Statistics applied to WS	11/29/2007	0	0		chloromethane UCL90 above PRQL for BN510 LDF lot 1, below PRQL when caclulated across entire waste stream
536	07	11/29/2007	1	12/4/2007	R. Morris	RF-441	BN510	IDC Change	Change IDC from RF-441 to RF-480	11/29/2007	0	0		Multiple NCRs for multiple containers, WMC change
537	07	11/29/2007			M. Johnson	BN-510	BN510	Other	Use as is - Statisitcs applied to WS	11/29/2007	0	0		1,1-dichloroethane UCL90 above PRQL for BN510 LDF lot 2, below PRQL when caclulated across entire waste stream
538	07	11/29/2007			P Fetzer	RF-330	BN510	Radionuclide	Cs in RF-330	12/4/2007	0	0		Cs present in container 10194966, IDC 330, Prefix 0012
539	07	12/4/2007			P Fetzer	RF-002	BNINW216	IDC Change	Change IDC from UN-00A to RF-002	12/4/2007	0	0		NCR 26944 for container 10150493, WMC change
540	07	12/5/2007			R. Morris	RF-441	BN510	IDC Change	Change IDC from RF-441 to RF-432	12/5/2007	0	0		NCR 35923 for container 10096322, WMC change
541	07	12/6/2007	8	5/15/2008	C Abbott	RF, MD Boxes	BN510	Other	Rationale used for Boxes with insufficient AK	12/6/2007	0	0		NCR 34663
542	07	12/7/2007	2	1/18/2008	P Fetzer	boxes	BN510	IDC Change	VE recommend IDC change for Boxes	12/7/2007	0	0		Multiple boxes IDC change - AK no recommend
543	07	12/11/2007	1	9/22/2008	M. Johnson	RF-960	BN510	Other	WMC from S5420 to S5490	12/12/2007	1	1	1/14/2008	WMC change for RF debris waste that is heterogeneous based on information in AK - need to update RPTs-05 and 12
544	07	12/11/2007	1	9/22/2008	M. Johnson	RF-241	BN510	Other	WMC from S5420 to S5490	12/12/2007	1	1	1/14/2008	WMC change for RF debris waste that is heterogeneous based on information in AK - need to update RPTs-05 and 12
545	07	12/26/2007	1	1/31/2008	C Abbott	RF-960	BN510	IDC Change	Change IDC from RF-960 to RF-480	12/26/2007	0	0		NCR 36764 for container 10182257 (LLD)
546	07	12/27/2007	5	5/15/2011	C Abbott	RF-960		IDC Change	Change IDC from RF-960 to RF-990 Dirt	6/12/2008	1	1	6/10/2008	Multiple NCRs and containers, WMC change. Change prefix date range for 0089.
547	07	1/9/2008			R. Morris	RF-330	BN510	IDC Change	Change IDC from RF-330 to RF-339	1/9/2008	0	0		NCR 36786 for container 10108703, WMC change
548	—	8/21/2008				Not used			NOT USED - CANCELLED AKR		0	0		
549	08	1/3/2008			R. Morris	RF-960	BN510	IDC Change	Change IDC from RF-960 to RF-336	1/3/2008	0	0		Multiple NCRs and containers, WMC change
550	07	1/3/2008	3	6/8/2011	R. Morris	RF-960	BN510	IDC Change	Change IDC from RF-960 to RF-330	1/3/2008	0	0		Multiple NCRs and containers, WMC change
551	07	1/7/2008			R. Morris	RF-441	BN510	IDC Change	Change IDC from RF-441 to RF-440	1/7/2008	0	0		NCR 36935 for container 10123061, WMC change
552	07	1/7/2008			R. Morris	RF-441	BN510	IDC Change	Change IDC from RF-441 to RF-375	1/7/2008	1	1	9/22/2008	NCR 37059 for container 10057823, WMC change
553	07	1/8/2008			R. Morris	RF-320	BN296	IDC Change	Change IDC from RF-320 to RF-480	1/8/2008	0	0		NCR 37078 for container 10200735, LLD
554	07	1/14/2008	9	5/13/2020	J Collins	RF-371	BN161	IDC Change	Standing AKR. Change IDC from RF-371 to RF-960	1/14/2008	3	3	3/31/2008	Standing AKR, WMC change, continues AKR-07-511
555	08	1/14/2008			R. Morris	RF-960	BN510	IDC Change	Change IDC from RF-371 to RF-960 and then to RF-337	1/14/2008	0	0		NCR 36973 for container 10189336, WMC change
556	07	1/21/2008	4	2/10/2014	R. Morris	RF-320	BN296	IDC Change	Change IDC from RF-320 to RF-337	1/21/2008	1	1	1/21/2008	Multiple NCRs and containers, WMC change
557	07	1/21/2008	2	12/22/2009	R. Morris	RF-336	BN510	IDC Change	Change IDC from RF-336 to RF-440	1/21/2008	0	0		Multiple NCRs for multiple containers, WMC change
558	08	1/21/2008	4	6/11/2012	J Collins	RF-960	BN510	IDC Change	Change IDC from RF-960 to RF-371	1/21/2008	0	0		Multiple NCRs and containers, IDCand WMC change

AK Resolution Ledger

10/20/2014, 11:48 AM

AKR	AKR Year (i.e. AKR-XX-###)	Date Initiated	Revision Number	Revision Date	Initiator	IDC	Waste Stream or Lot	Description of Discrepancy	Description or Resolution	Date Signed	Number of Action Items	Number of Atts. completed	Date All Atts Incorporated	Comments
559	07	1/21/2008			C Abbott	BN-510	BN510	IDC Change	Change IDC from BN-510 to BN-701	1/22/2008	0	0		75 product drums with less than 100 nCi/g; per request of SPM; Rev 1 was going to be drafted to delete 7 containers on 11/6/08. Per evaluation on 07/02/09, AKR Rev 1 does not need to be issued because the containers have already been updated. JMC 07/02/09
560	07	1/22/2008	9	2/15/2011	l gouldthorpe	RF, MD boxes	BN510	IDC Change	Rationale used for Boxes with non debris waste	1/24/2008	0	0		Standing AKR: Boxes w/NCRs for IDC change various IDCs. Waste is soil or sludge and can't be supercompacted
561	07	1/28/2008	9	6/5/2008	J Collins	RF-440	BN243	IDC Change	Change IDC from RF-440 to RF-441	1/28/2008	1	1	3/11/2008	New Standing AKR - replaces AKR-07-491, WMC change. Change prefix date range.
562	08	1/31/2008	7	5/9/2012	R. Morris	RF-371	BN161	IDC Change	Change IDC from RF-371 to RF-480	1/31/2008	0	0		Multiple NCRs for multiple containers, WMC change
563	---	8/21/2008				Not used			NOT USED - CANCELLED AKR		0	0		
564	08	2/7/2008			R. Morris	RF-336	BN510	IDC Change	Change IDC from RF-336 to RF-441	2/7/2008	0	0		Multiple NCRs and containers, WMC change
565	08	2/7/2008	9	10/2/2008	R. Morris	RF-336	BN510	IDC Change	Change IDC from RF-336 to RF-480	2/7/2008	0	0		Standing AKR, WMC change, continues AKR-07-495
566	08	2/7/2008			R. Morris	RF-300	BN510	IDC Change	Change IDC from RF-300 to RF-337	2/7/2008	0	0		NCR 28335 for container 10163210, WMC change
567	08	2/11/2008			R. Morris	RF-336	BN510	IDC Change	Change IDC from RF-336 to RF-335	2/11/2008	0	0		NCR 37818 for container 10153207, WMC change
568	08	2/18/2008			R. Morris	RF-336	BN510	IDC Change	Change IDC from RF-336 to RF-090	2/18/2008	1	1	3/18/2008	NCR 37991 for container 10191562, WMC change
569	08	2/26/2008	1	8/11/2008	R. Morris	RF-336	BN510	IDC Change	Change IDC from RF-336 to RF-292	2/26/2008	0	0		NCR 38093 for container 10107386, WMC change
570	08	2/26/2008	3	6/17/2010	R. Morris	RF-480	BN510	IDC Change	Change IDC from RF-480 to RF-441	2/26/2008	1	0		Multiple NCRs for multiple containers, WMC change
571	08	2/26/2008	1	5/26/2008	R. Morris	RF-330	BN510	IDC Change	Change IDC from RF-330 to RF-335	2/26/2008	0	0		NCR 38096 for container 10158512, NCR 39539 for container 10214240, WMC change
572	08	3/3/2008	1	2/21/2011	R. Morris	RF-960	BN510	IDC Change	Change IDC from RF-960 to RF-090	4/28/2008	0	0		Multiple NCRs for multiple containers, WMC change
573	08	3/11/2008			R. Morris	RF-900	BN510	IDC Change	Change IDC from RF-900 to RF-480	3/11/2008	0	0		NCR 38274 for container 10212883, WMC change
574	08	3/13/2008	2	10/6/2008	P Fetzer	BN-620	N/A	IDC Change	Change IDC from unknown and RF-337 to BN-620	3/13/2008	0	0		Boxes with missing or incomplete hist data. Multiple NCRs and multiple boxes.
575	08	3/27/2008			R. Morris	RF-336	BN510	IDC Change	Change IDC from RF-336 to RF-481	3/27/2008	0	0		NCR 38448 for container 10189684, WMC change
576	08	4/28/2008	2	5/13/2008	J Collins	RF-960	BN510	IDC Change	Change IDC from RF-960 to RF-440	4/28/2008	0	0		Standing AKR, Multiple NCRs and containers, WMC change
577	08	5/8/2008			R. Morris	RF-464	BN510	IDC Change	Change IDC from RF-464 to RF-970	5/8/2008	0	0		NCR 39158 for container 10221616, WMC Change, <LLD
578	08	7/10/2008	10	9/24/2008	B Erhardt	RF, MD boxes	BN510	IDC Change	Standing AKR. Changes IDC-boxes w/known gen Rev of AKR-07-534	5/10/2008	0	0		Revision 3 added 6 new boxes. R4 added 2 boxes. R5 added 4 boxes.
579	08	5/15/2008	2	1/19/2010	P Fetzer	RF, MD boxes	BN510	IDC Change	Standing AKR. Changes IDC-Boxes w/no hist data Rev of AKR-07-541	5/22/2008	0	0		Boxes with missing or incomplete hist data. Multiple NCRs and multiple boxes.
580	08	5/19/2008	9	12/2/2008	J Collins	RF-371	BN161	IDC Change	Standing AKR. IDC change from RF-371 to RF-960	5/19/2008	0	0		Standing AKR, WMC change, continues AKR-07-554
581	08	5/19/2008			R. Morris	MD-838	BN510	IDC Change	Change IDC from MD-838 to MD-847	5/19/2008	0	0		Multiple NCRs and containers, IDC change
582	08	5/21/2008	10	12/6/2010	R. Morris	RF-004	BN004	IDC Change	Change IDC from RF-004 to RF-337	5/21/2008	0	0		Multiple NCRs and containers, WMC change
583	08	5/22/2008			J Collins	RF-007	BNINW218	IDC Change	Change IDC from RF-007 to MD-836	5/29/2008	0	0		NCR 39454 for container 10063174, Generator change from Rocky Flats to Mound
584	08	5/22/2008			R. Morris	MD-836	BN836	IDC Change	Change IDC from no IDC to MD-836	5/22/2008	0	0		Multiple NCRs and containers, IDC change
585	08	5/27/2008			J Collins	RF-960	BN510	IDC Change	Change IDC from RF-960 to RF-360	5/27/2008	0	0		NCR 39566 for container 10214209, WMC change
586	08	6/5/2008	1	7/3/2008	J Collins	RF-440	BN510	IDC Change	Change IDC from RF-440 to RF-337	6/12/2008	0	0		Multiple NCRs and containers, IDC change
587	08	6/9/2008	9	2/23/2010	J Collins	RF-330	BN510	IDC Change	Change IDC from RF-330 to RF-480	6/9/2008	0	0		Multiple NCRs and containers, IDC change
588	08	6/9/2008			J Collins	RF-480	BN510	IDC Change	Change IDC from RF-480 to RF-490	6/12/2008	0	0		NCR 39826 for container 10220010, WMC change
589	08	6/18/2008			J Collins	RF-440	BN510	IDC Change	Change IDC from RF-440 to RF-960	6/19/2008	0	0		NCR 39997 for container 10220512, WMC change
590	08	6/25/2008			T Venneman	RF-970	BN510	IDC Change	Change IDC from RF-970 to RF-490	6/26/2008	0	0		NCR 40053 for container 10012993, WMC change
591	08	6/25/2008	2	12/15/2009	T Venneman	RF-960	BN510	IDC Change	Change IDC from RF-960 to RF-432	6/30/2008	0	0		Multiple NCRs and containers, IDC change
592	08	6/25/2008	9	12/1/2009	M. Johnson	RF-440	BN510	IDC Change	Change IDC from RF-440 to RF-441 or RF-442	6/26/2008	1	1	6/4/2009	New standing AKR, multiple NCRs, IDC change from RF-440 to RF-441 or 442, need to update prefix dates
593	---	6/26/2008			T Venneman	Not used	BN510	IDC Change	NOT USED - CANCELLED AKR		0	0		
594	08	7/2/2008	3	5/9/2012	J Collins	RF-990	BN510	IDC Change	Change IDC from RF-990 to RF-960	7/7/2008	0	0		Multiple NCRs and containers, WMC change
595	08	7/23/2008	1	9/22/2008	C Abbott	RF-debris	BN510	Radionuclide	Detection of 137Cs in RF-debris	7/23/2008	0	0		137 Cs detected in IDC RF-336 and IDC RF-371 waste.
596	08	7/31/2008			J Collins	UN-00B	BN510	IDC Change	Change IDC from UN-00B to RF-960	7/31/2008	0	0		NCR 25516 for container 10126507, WMC change
597	08	8/5/2008	1	8/6/2008	R. Morris	RF-320	BN296	IDC Change	Change IDC from RF-320 to RF-440	8/5/2008	0	0		NCR 40628 for container 10239207, WMC change
598	08	8/5/2008	5	3/24/2014	R. Morris	RF-900	BN510	IDC Change	Change IDC from RF-900 to RF-950	8/5/2008	0	0		Multiple NCRs and containers, IDC change
599	08	8/13/2008			R. Morris	RF-900	BN510	IDC Change	Change IDC from RF-900 to RF-990	8/13/2008	0	0		Multiple NCRs and containers, IDC change, <LLD
600	08	5/17/2010	3	8/12/2010	R. Morris	RF-330	BN510	IDC Change	Change IDC from RF-330 to RF-441	8/19/2008	2	2	5/17/2010	Multiple NCRs for multiple containers, WMC change
601	08	8/21/2008	1	10/16/2008	R. Morris	RF-336	BN510	IDC Change	Change IDC from RF-336 to RF-463	8/21/2008	0	0		NCR 41027 for container 10218588, WMC change
602	08	8/21/2008			R. Morris	RF-336	BN510	IDC Change	Change IDC from RF-336 to RF-300	8/21/2008	0	0		NCR 41031 for container 10233162, WMC change
603	08	9/4/2008	3	2/5/2014	R. Morris	RF-900	BN510	IDC Change	Change IDC from RF-900 to RF-960	9/4/2008	0	0		NCR 41216 for container 10083478, WMC change
604	08	9/9/2008			R. Morris	Not used			NOT USED - CANCELLED AKR	9/9/2008	0	0		NCR 41260 for container 10226772, WMC change, <LLD - Cancelled AKR
605	08	9/9/2008			R. Morris	RF-464	BN296	IDC Change	Return to historical IDC (RF-480) after incorrect change to RF-464	9/9/2008	1	1	9/15/2008	NCR 24912 for container 10132503, WMC change, <LLD, Requires an RTR/VE Update to change.
606	08	9/9/2008			R. Morris	MD-836	N/A	IDC Change	Change IDC from MD-836 to MD-804 after incorrect change to MD-847	9/9/2008	1	1	9/14/2008	NCR 19886 for container 10060198, WMC change, Requires an RTR/VE Update to change.
607	08	9/15/2008			R. Morris	RF-440	BN243	IDC Change	Change IDC from RF-440 to RF-336	9/15/2008	0	0		NCR 41335 for container 10147039, WMC change
608	08	9/16/2008	10	11/14/2008	P Fetzer	RF, MD Boxes	BN510	IDC Change	Standing AKR. Changes IDC-boxes w/known gen Rev of AKR-08-608	9/16/2008	0	0		Boxes with missing or incomplete hist data. Multiple NCRs and multiple boxes.
609	08	9/18/2008	4	1/5/2009	R. Morris	RF-697	N/A	IDC Change	Create Historical IDs and assign RF-697 to unknown containers	9/18/2008	0	0		Multiple containers, no NCRs, <LLD
610	08	9/18/2008	5	1/5/2009	R. Morris	UN-00X	N/A	IDC Change	Assign UN-00x to unknown containers	9/18/2008	0	0		Multiple containers and NCRs, <LLD, Further AK analysis required
611	08	9/29/2008			R. Morris	RF-330	BN510	IDC Change	Change IDC from RF-330 to RF-338	9/29/2008	0	0		NCR 41499 for container 10088951, WMC change
612	08	10/21/2008			R. Morris	UN-00A	N/A	IDC Change	Change IDC from UN-00A to MD-835	10/21/2008	0	0		NCR 41754 for container 10035409, WMC change, <LLD, Follow on to AKR-05-344
613	08	10/27/2008	2	6/29/2009	R. Morris	RF-464	BN510	IDC Change	Change IDC from RF-464 to RF-490	10/27/2008	0	0		Multiple NCRs for multiple containers, WMC change
614	---	10/30/2008			P Fetzer	Not used	N/A	Radionuclide	NOT USED - CANCELLED AKR		0	0		137 Cs detected in IDC RF-697 waste. Container 10019752. This AKR is cancelled, pending reassay per Jim Seamans.pff 7/9/09

AK Resolution Ledger

10/20/2014, 11:48 AM

AKR	AKR Year (i.e., AKR-XX-###)	Date Initiated	Revision Number	Revision Date	Initiator	IDC	Waste Stream or Lot	Description of Discrepancy	Description of Resolution	Date Signed	Number of Action Items	Number of AIs completed	Date All AIs Implemented	Comments
615	08	11/13/2008			R. Morris	MD-847	BN510	IDC Change	IDC change from RF-847 to RF-825	11/13/2008	1	1	7/9/2009	NCR 42077 for container 10145629, waste stream change, pack date range adjustment required.
616	08	11/17/2008			R. Morris	RF-336	BN510	IDC Change	IDC change from RF-336 to RF-490	11/17/2008	0	0		NCR 42106 for container 10184738, WMC change
617	08	11/25/2008	10	2/23/2009	P Fetzer	RF, MD Boxes	BN510	IDC Change	Standing AKR. Changes IDC-boxes w/known gen Rev of AKR-08-608	12/1/2008	0	0		Boxes with missing or incomplete hist data. Multiple NCRs and multiple boxes.
618	08	12/16/2008	7	12/29/2011	R. Morris	RF-336	BN510	IDC Change	Change IDC from RF-336 to RF-480	12/16/2008	0	0		Multiple NCRs and containers, WMC change
619	08	12/17/2008			R. Morris	MD-848	BN304	IDC Change	Change IDC from MD-848 to MD-836	12/16/2008	0	0		NCR 42508 for container 10002220, WMC change. Note: the historical ID for this container not MD-848, but rather MD-836. A supervisory Overide was performed to change MD-848 to MD-836. AKR-08-619 document clarifies the historical ID issue and WTS was verified to ensure the correct historical ID is IDMD740003906
620	08	12/18/2008			R. Morris	BN-508	BN510	IDC Change	Change IDC from BN-508 to RF-002	12/18/2008	0	0		NCR 42529 for container 10107578, WMC change
621	08	12/22/2008	1	5/17/2012	R. Morris	RF-336	BN510	IDC Change	Change IDC from RF-336 to RF-320	12/22/2008	1	1	12/22/2008	NCR 42579 for container 10029327, WMC change
622	08	12/22/2008	1	3/5/2011	R. Morris	RF-336	BN510	IDC Change	Change IDC from RF-336 to RF-960	12/22/2008	0	0		Multiple NCRs for multiple containers, WMC change
623	08	12/23/2008	11	3/26/2012	R. Morris	RF-374	BN510	IDC Change	Change IDC from RF-374 to RF-697	12/23/2008	0	0		Multiple NCRs for multiple containers, WMC change
624	08	12/29/2008			R. Morris	RF-422	N/A	IDC Change	Change IDC from RF-422 to RF-820	12/29/2008	0	0		Multiple NCRs for Multiple containers, WMC change
625	08	12/31/2008			R. Morris	MD-847	BN510	IDC Change	Change IDC from MD-847 to MD-848	12/31/2008	0	0		NCR 42744 for container 10145801, Waste Stream change
626	08	12/31/2008	1	1/6/2009	R. Morris	RF-960	BN510	Other	Add IDC RF-960 to prefix 0007 with a one day date range, 11/07/73	12/31/2008	1	1	12/31/2008	Add IDC RF-960 to prefix 0007 with a one day date range, 11/07/73
627	09	1/7/2009			R. Morris	MD-825	BN304	IDC Change	Change IDC from MD-825 to MD-804	1/7/2009	0	0		NCR 16557 for container 10034692, Not strictly required - cleaning up an old NCR.
628	09	1/12/2009	10	9/10/2009	P Fetzer	RF, MD Boxes	BN510	IDC Change	Standing AKR. Changes IDC-boxes w/known gen, AK disagrees w/RTR recommend	1/13/2009	0	0		Boxes with missing or incomplete hist data. Multiple NCRs and multiple boxes.
629	09	1/13/2009			R. Morris	RF-464	BN510	IDC Change	Change IDC from RF-464 to RF-440	1/13/2009	0	0		NCR 42900 for container 10110755, WMC change
630	09	1/13/2009	1	11/5/2013	R. Morris	MD-811	N/A	IDC Change	Change IDC from MD-811 to MD-803	1/13/2009	0	0		NCR 42909 for container 10029119; NCR 42910 for container 10029118, WMC change
631	09	1/20/2009			R. Morris	UN-00B	N/A	IDC Change	Change IDC from UN-00B to RF-001	1/20/2009	0	0		NCR 43099 for container 10013159; WMC change
632	09	1/29/2009	1	9/28/2010	R. Morris	RF-337	BN510	IDC Change	Change IDC from RF-337 to RF-440	2/2/2009	0	0		Multiple NCRs for multiple containers, WMC change
633	09	2/16/2009	4	3/1/2010	J Collins	RF-241	N/A	IDC Change	Change IDC from RF-241 to RF-432	3/17/2009	0	0		Multiple NCRs for multiple containers, WMC change
634	09	2/19/2009			P Fetzer	RF-339	BN510	IDC Change	Change IDC from RF-339 to RF-300	2/23/2009	0	0		NCR 43763 for container 10267967; WMC change
635	09	3/5/2009			P Fetzer	RF-004	BN004	IDC Change	Change IDC from RF-004 to RF-480	3/6/2009	0	0		NCR 43965 for container 10013767; WMC change
636	09	3/10/2009	9	12/16/2009	P Fetzer	RF, MD boxes	BN510	IDC Change	Standing AKR. Changes IDC-boxes w/known gen Rev of AKR-09-628	3/17/2009	0	0		Boxes with missing or incomplete hist data. Multiple NCRs and multiple boxes. Continuation of AKR-09-628.
637	09	4/14/2009			R. Morris	BN-508	BN510	IDC Change	Change IDC from BN-508 to RF-800	4/14/2009	0	0		NCR 44526 for container 10017771; WMC change
638	09	5/27/2009	2	8/16/2010	R. Morris	RF-751	N/A	IDC Change	Change IDC from RF-751 to RF-750	5/27/2009	1	1	5/27/2009	NCR 45561 for container 10140581; WMC change
639	09	6/25/2009	1	7/23/2009	R. Morris	IC-603	N/A	IDC Change	Change IDC from IC-603 to IC-526	6/25/2009	0	0		Multiple NCRs for multiple containers, WMC change
640	09	7/8/2009			C Abbott	RF-005	BNINW216	IDC Change	Change IDC from RF-005 to RF-001	7/9/2009	0	0		NCR 38208 for container 10124862; WMC change
641	09	8/11/2009			R. Morris	RF-004	BN004	IDC Change	Change IDC from RF-004 to RF-337	8/11/2009	0	0		NCR 46737 for container 10233561, WMC change
642	09	10/5/2009	8	11/6/2013	R. Morris	RF-440	BN243	IDC Change	Change IDC from RF-440 to RF-480	10/5/2009	0	0		Multiple NCRs for multiple containers, Waste Stream Change
643	09	10/6/2009			R. Morris	UN-00A	N/A	IDC Change	Change IDC from UN-00A to MD-836	10/6/2009	0	0		NCR 20715 for container 10026404, WMC change
644	09	10/8/2009			R. Morris	RF-336	BN510	IDC Change	Change IDC from RF-336 to UN-00A	10/8/2009	0	0		NCR 47607 for container 10170821, WMC change
645	09	11/10/2009	10	5/24/2012	R. Morris	MD-848	BN304	IDC Change	Change IDC from MD-848 to MD-847	11/10/2009	0	0		Multiple NCRs for multiple containers, Waste Stream Change
646	09	11/12/2009			R. Morris	RF-000	N/A	IDC Change	Change IDC from RF-000 to RF-432	11/12/2009	1	1	11/12/2009	NCR 48568 for container 10194306
647	09	11/24/2009	3	1/11/2012	R. Morris	RF-480	BN296	IDC Change	Change IDC from RF-480 to RF-440	11/24/2009	0	0		Multiple NCRs for multiple containers, WMC Change
648	09	11/24/2009			R. Morris	RF-980	N/A	IDC Change	Change IDC from RF-980 to RF-290	11/24/2009	1	1	11/24/2009	NCR 48960 for container 10166784, WMC change
649	09	11/25/2009			R. Morris	RF-330	BN510	IDC Change	Change IDC from RF-330 to RF-328	11/25/2009	1	1	11/25/2009	NCR 48996 for container 10190521, WMC change
650	09	12/1/2009	9	6/2/2010	R. Morris	RF-440	BN243	IDC Change	Change IDC from RF-440 to RF-441 or RF-442	12/1/2009	1	1	2/2/2010	Multiple NCRs for multiple containers, WMC change
651	09	12/3/2009	1	3/26/2013	R. Morris	BL-020	N/A	IDC Change	Change IDC from BL-020 to BL-010	12/3/2009	0	0		NCR 49276 for container 10030135, WMC change
652	09	12/3/2009	5	7/9/2014	R. Morris	BL-010	N/A	IDC Change	Change IDC from BL-010 to BL-020	12/3/2009	0	0		NCR 49284 for container 10021604, WMC change
653	09	12/4/2009	3	8/30/2011	R. Morris	RF-750	BN510	IDC Change	Change IDC from RF-750 to RF-753	12/4/2009	0	0		Multiple NCRs for multiple containers, WMC change
654	09	12/7/2009			R. Morris	BL-010 or BL-020	N/A	IDC Change	Change IDC from BL-010 or BL-020 to BL-030	12/21/2009	0	0		Multiple NCRs for multiple containers, WMC change
655	09	12/7/2009			R. Morris	RF-960	BN510	IDC Change	Change IDC from RF-960 to RF-290	12/7/2009	1	1	12/7/2009	Multiple NCRs for multiple containers, WMC change
656	09	12/7/2009	8	4/26/2010	R. Morris	RF-371	BN161	IDC Change	Change IDC from RF-371 to RF-090	12/7/2009	0	0		Multiple NCRs for multiple containers, WMC change
657	09	12/8/2009	11	5/25/2010	N Kirk	RF-371	BN161	IDC Change	Change IDC from RF-371 to RF-960	12/9/2009	1	1	2/22/2010	Multiple NCRs for multiple containers, WMC change
658	09	12/10/2009	1	9/15/2010	R. Morris	RF-300	BN510	IDC Change	Change IDC from RF-300 to RF-480	12/10/2009	0	0		Multiple NCRs for multiple containers, WMC change
659	09	12/14/2009			R. Morris	Not used	N/A	Other	NOT USED - CANCELLED AKR		0	0		Accumulation of AK information for BL IDCs
660	09	12/21/2009	10	6/8/2010	P Fetzer	RF, MD boxes	BN510	IDC Change	Standing AKR. Changes IDC-boxes w/known gen Rev of AKR-09-636	12/22/2009	0	0		Boxes with missing or incomplete hist data. Multiple NCRs and multiple boxes. Continuation of AKR-09-636.
661	10	1/13/2010	2	3/5/2011	R. Morris	RF-370	BN510	IDC Change	Change IDC from RF-370 to RF-371	1/13/2010	1	1	1/13/2010	Multiple NCRs for multiple containers, WMC change
662	—					Not used			NOT USED - CANCELLED AKR		0	0		Cancelled
663	10	11/10/2010			R. Morris	RF-003	N/A	IDC Change	Change IDC from RF-003 to RF-330	11/10/2010	1	1	10/11/2010	NCRs 56749, 50800, 50662 for container 10026035, WMC change
664	10	1/20/2010	1	2/17/2014	R. Morris	RF-440	BN243	IDC Change	Change IDC from RF-440 to RF-463	1/20/2010	0	0		NCR 50808 for container 10205956, WMC change
665	10	1/20/2010			R. Morris	RF-440	BN243	IDC Change	Change IDC from RF-440 to RF-241	1/20/2010	1	1	1/20/2010	NCR 50832 for container 10334015, WMC change
666	10	1/28/2010			R. Morris	RF-336	BN510	IDC Change	Change IDC from RF-336 to RF-463	1/28/2010	1	1	1/28/2010	NCR 50913 for container 10339150, WMC change
667	10	2/3/2010			R. Morris	RF-460	BN510	IDC Change	Change IDC from RF-460 to RF-463	2/3/2010	0	0		NCR 51179 for container 10196198, WMC change
668	10	2/3/2010	6	8/20/2012	R. Morris	RF-330	BN510	IDC Change	Change IDC from RF-330 to RF-374	2/3/2010	0	0		Multiple NCRs for multiple containers, WMC change
669	10	2/9/2010			R. Morris	RF-960	BN510	IDC Change	Change IDC from RF-960 to RF-320	2/10/2010	1	1	2/9/2010	NCR 51136 for container 10335871, WMC change
670	10	2/16/2010			R. Morris	RF-490	BN211	IDC Change	Change IDC from RF-490 to RF-440	2/16/2010	0	0		NCR 51147 for container 10339100 WMC change
671	10	2/18/2010			R. Morris	RF-752	N/A	IDC Change	Change IDC from RF-752 to RF-754	2/18/2010	0	0		NCR 51606 for container 10308390, WMC change
672	10	2/18/2010			R. Morris	RF-750	N/A	IDC Change	Change IDC from RF-752 to RF-747	2/18/2010	0	0		Multiple NCRs for multiple containers, WMC change
673	10	2/23/2010	1	9/20/2010	R. Morris	RF-330	BN296	IDC Change	Change IDC from RF-330 to RF-320	2/23/2010	0	0		NCR 51767 for container 10339411, WMC change
674	10	2/24/2010	3	5/25/2010	R. Morris	RF-370	BN510	IDC Change	Change IDC from RF-370 to RF-960	2/24/2010	0	0		Multiple NCRs for multiple containers, WMC change

AK Resolution Ledger

10/20/2014, 11:48 AM

AKR	AKR "Year" (i.e., AKR-XX###)	Date Initiated	Revision Number	Revision Date	Initiator	IDC	Waste Stream or Lot	Description of Discrepancy	Description of Resolution	Date Signed	Number of Action Items	Number of AIs completed	Date All AIs Incorporated	Comments
675	—					Not used								
676	10	3/1/2010	9	10/14/2010	R. Morris	RF-330	BN510	IDC Change	NOT USED - CANCELLED AKR		0	0		Cancelled
677	10	3/1/2010			R. Morris	RF-336	BN510	IDC Change	Change IDC from RF-330 to RF-480	3/1/2010	1	1	3/1/2010	Multiple NCRs for multiple containers, WMC change, Successor to AKR-08-587
678	10	3/2/2010	9	10/11/2010	R. Morris	RF-371	BN161	IDC Change	Change IDC from RF-336 to RF-371	3/1/2010	0	0		NCR 51905 for container 10341305, WMC change
679	10	3/3/2010			R. Morris	RF-001	BNINW216	IDC Change	Change IDC from RF-371 to RF-960	3/2/2010	0	0		Multiple NCRs for multiple containers, WMC change, Successor to AKR-09-657
680	10	3/11/2010	2	5/29/2012	R. Morris	RF-330	BN510	IDC Change	Change IDC from RF-001 to RF-336	3/3/2010	1	0		Multiple NCRs for multiple containers, WMC change
681	10	3/11/2010			R. Morris	RF-241	N/A	IDC Change	Change IDC from RF-330 to RF-338	3/11/2010	1	1	3/11/2010	NCR 52059 for container 10021917, WMC change
682	10	3/15/2010	8	11/18/2013	R. Morris	RF-330	BN296	IDC Change	Change IDC from RF-241 to UN-00B	3/11/2010	0	0		No NCR required, Container 10230700, WMC change
683	10	4/27/2010	6	6/13/2012	R. Morris	RF-371	BN161	IDC Change	Change IDC from RF-330 to RF-960	3/15/2010	0	0		Multiple NCRs for multiple containers, WMC change
684	10	5/18/2010	2	1/4/2012	R. Morris	RF-370	BN510	IDC Change	Change IDC from RF-371 to RF-330	4/27/2010	0	0		Multiple NCRs for multiple containers, WMC change, Successor to AKR-07-526
685	10	5/25/2010	8	11/27/2012	R. Morris	RF-370	BN510	IDC Change	Change IDC from RF-370 to RF-090	5/18/2010	1	1	5/18/2010	NCR 53340 for container 10342359, WMC change
686	10	6/3/2010	1	6/7/2010	R. Morris	RF-All	N/A	Other	Change IDC from RF-370 to RF-960	2/24/2010	0	0		Multiple NCRs for multiple containers, WMC change
687	10	6/17/2010			R. Morris	RF-300	BN510	IDC Change	Change the prefix date range based on container information	6/3/2010	1	1	6/3/2010	Change the prefix date range based on container information, multiple containers
688	10	6/17/2010	4	4/11/2012	P Fetzer	RF, MD boxes	BN510	IDC Change	Change IDC from RF-300 to RF-320	6/17/2010	1	1	6/17/2010	NCR 53659 for container 10116587, WMC change
689	10	6/24/2010	9	1/11/2012	R. Morris	RF-480	BN296	IDC Change	Standing AKR. Changes IDC-boxes w/known gen Rev of AKR-09-660	7/12/2010	1	0		Boxes with missing or incomplete hist data. Multiple NCRs and multiple boxes. Continuation of AKR-09-660.
690	10	7/6/2010	3	12/4/2013	R. Morris	RF-371	BN161	IDC Change	Change IDC from RF-480 to RF-337	6/24/2010	2	1	6/16/2011	Multiple NCRs for multiple containers, WMC change. Successor to AKR-07-523.
691	10	8/3/2010	9	8/2/2011	R. Morris	RF-440	BN243	IDC Change	Change IDC from RF-371 to RF-337	7/6/2010	0	0		Multiple NCRs for multiple containers, WMC change. Successor to AKR-07-517.
692	10	8/4/2010			R. Morris	RF-370	BN510	IDC Change	Change IDC from RF-440 to RF-441 or RF-442	7/4/2011	1	0		Multiple NCRs for multiple containers, WMC change. Successor to AKR-09-650
693	10	9/21/2010	1	6/12/2012	R. Morris	RF-950	BN510.1	IDC Change	Change IDC from RF-370 to RF-480	8/4/2010	0	0		NCR 54650 for container 10367383, WMC change
694	10	9/23/2010			R. Morris	RF-370	BN510.1	IDC Change	Change IDC from RF-950 to RF-900	9/21/2010	0	0		NCR 55636 for container 10368648, WMC change
695	10	9/23/2010			R. Morris	RF-370	BN510.1	IDC Change	Change IDC from RF-370 to RF-337	9/23/2010	0	0		NCR 55667 for container 10364203, WMC change
696	10	10/6/2010	1	12/21/2011	R. Morris	RF-950	BN510.1	IDC Change	Change IDC from RF-370 to RF-330	9/23/2010	0	0		NCR 55674 for container 10370462, WMC change
697	10	10/20/2010	3	9/7/2011	R. Morris	RF-330	BN510	IDC Change	Change IDC from RF-950 to RF-441	10/6/2010	1	0		Multiple NCRs for multiple containers, WMC change, Successor to AKR-10-676
698	10	10/21/2010	7	5/31/2012	R. Morris	RF-480	BN296	IDC Change	Change IDC from RF-330 to RF-480	10/20/2010	0	0		Multiple NCRs for multiple containers, WMC change, Successor to AKR-10-676
699	10	10/28/2010	1	11/4/2013	R. Morris	RF-995	N/A	IDC Change	Change IDC from RF-480 to RF-330	10/21/2010	0	0		Multiple NCRs for multiple containers, WMC change
700	10	11/1/2010			N Kirk	N/A	BN510	HWN	Change IDC from RF-995 to RF-337	10/28/2010	1	1	10/28/2010	NCR 56520 for container 10294011, WMC change
701	10	11/29/2010	9	11/14/2013	R. Morris	RF-004	BN004	IDC Change	1,1-Dichloroethane UCL90 above PRQL for Lot 4	11/1/2010	0	0		1,1-Dichloroethane UCL90 above PRQL for Lot 4
702	11	2/15/2011			B Erhardt	N/A	All Hanford waste	Radionuclide	Change IDC from RF-004 to RF-337	11/29/2010	0	0		Multiple NCRs and containers, WMC change. Successor to AKR-08-582
703	11	2/22/2011	10	2/13/2012	R. Morris	RF-371	BN161	IDC Change	Detection of Cm-245 in Hanford debris	2/17/2011	0	0		Cm-245 detected in Hanford debris waste during NDA.
704	11	3/7/2011	1	6/15/2011	R. Morris	RF-480	BN296	IDC Change	Change IDC from RF-371 to RF-960	2/22/2011	0	0		Multiple NCRs for multiple containers, WMC change, Successor to AKR-10-678
705	11	5/14/2011			R. Morris	BN-508	BN510.1	IDC Change	Change IDC from RF-480 to RF-300	3/7/2011	2	2	6/16/2011	Multiple NCRs for multiple containers, WMC change,
706	11	6/9/2011	1		R. Morris	RF-440	BN243	IDC Change	Change IDC from BN-508 to RF-337	5/14/2011	1	1	5/14/2011	NCR 62674 for container 10066948, WMC change
707	11	6/16/2011			R. Morris	RF-464	BN510.1	IDC Change	Change IDC from RF-440 to RF-339	6/9/2011	2	1	6/9/2011	Multiple NCRs for multiple containers, WMC change,
708	11	6/20/2011	1	7/26/2011	R. Morris	RF-440	BN243	IDC Change	Change IDC from RF-464 to RF-463	6/16/2011	0	0		NCR 63477 for container 10205972, WMC change
709	11	6/20/2011			R. Morris	RF-442	BN510.1	IDC Change	Change IDC from RF-440 to RF-337	6/20/2011	1	1	6/20/2011	NCR 63579 for container 10154767, NCR 64091 for container 10205946, WMC change
710	11	8/1/2011			N Kirk	RF-480	BN510.1	IDC Change	Change IDC from RF-442 to RF-339	6/20/2011	1	1	6/20/2011	NCR 63582 for container 10154396, WMC change
711	—					Not used			Change IDC from RF-480 to RF-328	8/3/2011	1	1	10/19/2011	NCR 64632 for container 10177919, WMC change
712	11	8/3/2011			R. Morris	RF-464	BN510.1	IDC Change	NOT USED - CANCELLED AKR		0	0		Cancelled
713	11	8/17/2011			R. Morris	RF-440	BN243	IDC Change	Change IDC from RF-464 to RF-337	8/3/2011	0			NCR 64678 for container 10206565
714	11	8/23/2011	3	1/5/2012	R. Morris	RF-440	BN243	IDC Change	Change IDC from RF-440 to RF-330	8/17/2011	0			NCR 64677 for container 10183833
715	11	8/30/2011	1	2/11/2014	R. Morris	RF-002	BNINW216	IDC Change	Change IDC from RF-440 to RF-441-442	8/24/2011	1	1	8/23/2011	Multiple NCRs for multiple containers, WMC change, Successor to AKR-10-691
716	11	8/30/2011			R. Morris	RF-441	BN510.1	IDC Change	Change IDC from RF-002 to RF-337	8/30/2011	1	1	8/30/2011	NCR 65246 for container 10360624, WMC change
717	11	9/5/2011			N Kirk	RF-376	BN510.1	IDC Change	Change IDC from RF-441 to RF-330	8/30/2011	0	0		NCR 65321 for container 10185934, WMC change
718	11	9/6/2011	3	7/1/2013	R. Morris	RF-960	BN510.1	IDC Change	Change IDC from RF-376 to RF-337	9/5/2011	1	1	9/5/2011	NCR 65472 for container 10059367, WMC change
719	11	9/7/2011			N Kirk	RF-744	BN004	IDC Change	Change IDC from RF-960 to RF-090	9/6/2011	0			NCR 65486 for container 10206550, WMC change
720	11	9/13/2011			T Venneman	RF-744	BN004	IDC Change	Change IDC from RF-744 to RF-750	10/8/2011	1	1	10/8/2011	Multiple NCRs for multiple containers, WMC change
721	11	9/14/2011	3	12/19/2011	R. Morris	RF-750	BN510.1	IDC Change	Change IDC from RF-744 to RF-750	9/26/2011	0	0		NCRs 65983 and 65984 for container 10322684, WMC change
722	11	10/8/2011	5	4/16/2012	R. Morris	RF-750	BN510.1	IDC Change	Change IDC from RF-750 to RF-753	9/14/2011	2	2	10/25/2011	Multiple NCRs for multiple containers, WMC change
723	11	10/25/2011			R. Morris	RF-750	BN510.1	IDC Change	Change IDC from RF-750 to RF-751	10/8/2011	1	1	10/8/2011	Multiple NCRs for multiple containers, WMC change
724	11	10/31/2011			R. Morris	RF-750	BN510.1	IDC Change	Change IDC from RF-750 to RF-747	10/25/2011	1	1	10/25/2011	NCR 66420 for container 10325245, WMC change
725	11	11/8/2011			R. Morris	RF-300	BN510.1	IDC Change	Change IDC from RF-750 to RF-752	10/31/2011	1	1	10/31/2011	NCR 66490 for container 10339622
726	11	11/9/2011	1	12/29/2011	R. Morris	RF-752	N/A	IDC Change	Change IDC from RF-300 to RF-311	11/8/2011	1	1	11/8/2011	NCR 66649 for container 10206548, WMC change
727	11	11/21/2011			R. Morris	RF-970	BN510.1	IDC Change	Change IDC from RF-752 to RF-754	11/9/2011	1	1	11/9/2011	Multiple NCRs for multiple containers, WMC change
728	11	11/29/2011			N Kirk	RF-750	BN510.1	IDC Change	Change IDC from RF-970 to RF-960	11/21/2011	0	0		NCR 66923 for container 10156324, WMC change
729	11	12/7/2011			N Kirk	RF-440	BN243	IDC Change	Change IDC from RF-750 to RF-742	11/29/2011	1	0		NCR 67041 for container 10323855, WMC change
730	11	12/12/2011	6	5/28/2012	R. Morris	RF-371	BN161	IDC Change	Change IDC from RF-440 to RF-376	12/8/2011	1	0		NCR 67275 for container 10154417, WMC change
731	11	12/13/2011			R. Morris	RF-391,392	BN510.1	IDC Change	Change IDC from RF-371 to RF-374	12/12/2011	0	0		NCR 67413 for container 10148006, WMC change
732	11	12/27/2011	4	11/25/2013	R. Morris	BN-508	BN510.1	IDC Change	Change IDC from RF-391 to RF-440	12/13/2011	1	1	12/13/2011	NCR 67431 for container 10060382, WMC change
733	12	1/3/2012	9	9/20/2012	R. Morris	RF-330	BN510.1	IDC Change	Change IDC from BN-508 to BN-600	12/27/2011	0	0		Multiple NCRs for multiple containers, Waste Stream Change
734	12	1/4/2012	1	2/1/2012	C Hinkle-Daniel	RF-371	BN510.1	IDC Change	Change IDC from RF-330 to RF-480	1/3/2012	0	0		NCR 67997 for container 10190435, WMC Change
735	12	1/4/2012			R. Morris	RF-337	BN510.1	IDC Change	Change IDC from RF-371 to RF-440	1/4/2012	0	0		NCR 68022 for container 10344189, WMC Change
736	12	1/5/2012	4	5/28/2012	C Hinkle-Daniel	RF-336	BN510.1	IDC Change	Change IDC from RF-337 to RF-490	1/4/2012	0	0		NCR 68025 for container 10245486, WMC Change
737	12	1/5/2012			C Hinkle-Daniel	RF-337	BN510.1	IDC Change	Change IDC from RF-336 to RF-480	1/16/2012	0	0		Multiple NCRs for multiple containers, WMC change
738	12	1/11/2012			C Hinkle-Daniel	RF-432	N/A	IDC Change	Change IDC from RF-337 to RF-339	1/16/2012	1	1	1/16/2012	NCR 68040 for container 10202100, WMC Change
739	12	1/12/2012			R. Morris	UN-00B	N/A	Other	Change IDC from RF-432 to RF-374	1/16/2012	1	1	1/16/2012	NCR 68193 for container 10090702, WMC Change
740	12	1/17/2012	1	5/28/2012	C Hinkle-Daniel	RF-336	BN510.1	IDC Change	Change IDC from UN-00B to RF-751 for debris container.	1/12/2012	0	0		NCR 68206 for container 10319004, WMC change
									Change IDC from RF-336 to RF-338	1/17/2012	0	0		NCR 68314 for container 10160086, WMC change

AK Resolution Ledger

10/20/2014, 11:48 AM

AKR	AKR Year (i.e., AKR-XX-###)	Date Initiated	Revision Number	Revision Date	Initiator	IDC	Waste Stream or Lot	Description of Discrepancy	Description of Resolution	Date Signed	Number of Action Items	Number of AIs completed	Date All AIs Incorporated	Comments
741	12	1/17/2012			R. Morris	RF-990	N/A	IDC Change	Change IDC from RF-990 to RF-970	1/17/2012	1	1	1/17/2012	NCR 68312 for container 10135348, WMC change
742	12	1/19/2012			C Hinkle-Daniel	RF-950	BN510.1	IDC Change	Change IDC from RF-950 to RF-336	1/19/2012	0	0		NCR 68361 for container 10233356, WMC change
743	12	1/23/2012			C Hinkle-Daniel	RF-374	BN510.1	IDC Change	Change IDC from RF-374 to RF-330	1/23/2012	1	1	1/23/2012	NCR 68454 for container 10132087, WMC change
744	12	1/25/2012	8	4/30/2014	R. Morris	RF-480	BN296	IDC Change	Change IDC from RF-480 to RF-337	1/25/2012	1	1	2/21/2012	Multiple NCRs for multiple containers, WMC change, Successor to AKR-10-689
745	12	2/1/2012	1	2/5/2014	C Hinkle-Daniel	MD-848	BN304	IDC Change	Change IDC from MD-848 to MD-836	2/1/2012	0	0		NCR 68706 for container 10120214, WMC change
746	12	2/2/2012	1	3/6/2013	R. Morris	RF-360	BN211	IDC Change	Change IDC from RF-360 to RF-480	2/2/2012	0	0		NCR 68729 for container 10062288, WMC Change
747	12	2/8/2012	1	6/4/2012	C Hinkle-Daniel	RF-374	BN510.1	IDC Change	Change IDC from RF-374 to RF-371	2/8/2012	0	0		NCR 68871 for container 10107447, WMC Change
748	12	2/8/2012	5	6/18/2012	C Hinkle-Daniel	RF-371	BN510.1	IDC Change	Change IDC from RF-371 to RF-697	2/8/2012	4	4	6/11/2012	Multiple NCRs for multiple containers, WMC change
749	12	2/9/2012			C Hinkle-Daniel	RF-336	BN510.1	IDC Change	Change IDC from RF-336 to RF-990	2/9/2012	1	1	2/9/2012	NCR 68888 for container 10135728, WMC Change
750	12	3/20/2012			R. Morris	RF-330	BN510.1	IDC Change	Change Box IDC from RF-330 to RF-480	3/2/2012	0	0		Multiple NCRs for multiple containers, WMC change
751	12	3/20/2012	13	8/6/2012	R. Morris	RF-371	BN161	IDC Change	Change IDC from RF-371 to RF-960	3/20/2012	0	0		Multiple NCRs for multiple containers, WMC change, Successor to AKR-11-703
752	—					not used			NOT USED - CANCELLED AKR		0	0		Cancelled
753	12	4/2/2012	7	12/18/2012	C Hinkle-Daniel	RF-374	BN510.1	IDC Change	Change IDC from RF-374 to RF-697	4/2/2012	3	3	10/1/2012	NCR 69881 for container 10166746, WMC Change
754	12	4/30/2012	1	4/25/2013	C Hinkle-Daniel	RF-338	BN510.1	IDC Change	Change IDC from RF-338 to RF-374	5/1/2012	1	1	5/1/2012	NCR 70470 for container 10104484, WMC Change
755	12	5/28/2012			C Hinkle-Daniel	RF-371	BN510.1	IDC Change	Change IDC from RF-371 to RF-441	5/30/2012	0	0		NCR 71015 for container 10154340, WMC Change
756	12	5/31/2012	3	10/28/2013	C Hinkle-Daniel	RF-960		IDC Change	Change IDC from RF-960 to RF-990 Dirt	5/31/2012	2	2	6/18/2012	Multiple NCRs for multiple containers, WMC change,
757	12	6/4/2012			C Hinkle-Daniel	MD-848	BN304	IDC Change	Change IDC from MD-848 to MD-842	6/4/2012	0	0		NCR 71103 for container 10147665, WMC Change
758	12	6/5/2012	R1	9/25/2013	C Hinkle-Daniel	RF-370		IDC Change	Change IDC from RF-370 to RF-990	6/5/2012	1	1	6/5/2012	NCR 71134 for container 10367990, WMC Change
759	12	6/5/2012	1	3/13/2014	C Hinkle-Daniel	RF-950	BN510.1	IDC Change	Change IDC from RF-950 to RF-760	6/5/2012	0	0		Multiple NCRs for multiple containers, WMC change,
760	12	6/7/2012	5	7/16/2013	C Hinkle-Daniel	RF-371	BN161	IDC Change	Change IDC from RF-371 to RF-374	6/7/2012	1	1	6/7/2012	Multiple NCRs for multiple containers, WMC change,
761	12	6/12/2012	1	7/10/2012	C Hinkle-Daniel	RF-371	BN161	IDC Change	Change IDC from RF-371 to RF-090	6/12/2012	1	1	6/12/2012	Multiple NCRs for multiple containers, WMC change,
762	12	6/18/2012	3	7/16/2013	C Hinkle-Daniel	RF-371	BN510.1	IDC Change	Change IDC from RF-371 to RF-697	6/18/2012	1	1	10/1/2012	Multiple NCRs for multiple containers, WMC change,
763	12	6/18/2012	1	3/19/2014	C Hinkle-Daniel	RF-330	BN510.1	IDC Change	Change IDC from RF-330 to RF-990	6/18/2012	0	0		NCR 71405 for container 10233818, WMC change
764	12	6/25/2012			C Hinkle-Daniel	RF-005	BN510.1	IDC Change	Change IDC from RF-005 to RF-760	6/25/2012	0	0		NCR 71469 for container 10366219, WMC change
765	12	8/7/2012	1	7/25/2013	C Hinkle-Daniel	RF-371	BN510.1	IDC Change	Change IDC from RF-371 to RF-330	8/7/2012	0	0		NCR 48220 for container 10146774, WMC change
766	12	8/28/2012		8/28/2012	C Hinkle-Daniel	RF-371	BN161	IDC Change	Change IDC from RF-371 to RF-375	8/28/2012	0	0		NCR 72310 for container 10124144, WMC change
767	12	9/26/2012	1	10/29/2012	R. Morris	RF-480	BN296	IDC Change	Change Box IDC from RF-480 to RF-490	9/26/2012	0	0		No NCRs Required, WMC Change

AK23

AMWTP

Advanced Mixed Waste Treatment Project

AMWTP

Batch Report Coversheet

Date: 22-Sep-2014

Time: 08:23

Batch Type Real Time Radiography

Batch Report No. RTR14-00005

Batch Id RTR14-00005

Open Date 23-JAN-14 16:36:27

Close Date 25-JAN-14 16:59:07

Batch Status AP

Test Facility Idaho AMWTP

Equipment Id Z-213-101 RTR Station Left (213-101)

Container Id	IDC	Analysis Id	Date Examined	QC Type	Analysis Status	Operator
10135407	RF-002	0000094410	23-JAN-14 16:36:27	Original	P	KENT KEARN
10369057	BN-524	0000094414	24-JAN-14 10:31:14	Original	P	AARON ATWELL
10145322	RF-750	0000094416	24-JAN-14 11:38:03	Original	P	SETH OLDHAM
10339021	RF-095	0000094418	24-JAN-14 11:56:09	Original	P	AARON ATWELL
10425610	RF-004	0000094422	24-JAN-14 13:27:46	Original	P	DANNY GREEN
10494032	BN-600	0000094424	24-JAN-14 14:14:41	Original	P	DANNY GREEN
10042328	RF-337	0000094425	24-JAN-14 14:56:01	Original	P	DANNY GREEN
10313178	RF-750	0000094427	24-JAN-14 15:16:03	Original	P	DANNY GREEN
10494031	BN-600	0000094430	24-JAN-14 16:52:05	Original	P	DANNY GREEN
10494030	BN-600	0000094438	24-JAN-14 17:51:47	Original	P	DANNY GREEN
10323541	RF-750	0000094439	24-JAN-14 18:06:45	Original	P	SETH OLDHAM
10182410	RF-007	0000094441	25-JAN-14 11:46:18	Original	P	MICHAEL RICKS
10220519	RF-440	0000094444	25-JAN-14 12:02:20	Original	P	MICHAEL RICKS
10034756	RF-807	0000094446	25-JAN-14 12:22:52	Original	P	MICHAEL RICKS
10220519	RF-440	0000094448	25-JAN-14 13:23:54	RTR OIO	P	JOHN CUMMINGS
10034756	RF-807	0000094450	25-JAN-14 13:47:33	Replicate / Duplicate	P	JOHN CUMMINGS
10336333	RF-743	0000094451	25-JAN-14 14:18:46	Original	P	JOHN CUMMINGS
10368557	BN-524	0000094453	25-JAN-14 15:10:06	Original	P	KRISANN HUGHES
10054382	RF-421	0000094455	25-JAN-14 15:26:39	Original	P	JOHN CUMMINGS
10366291	RF-760	0000094456	25-JAN-14 15:44:12	Original	P	SETH OLDHAM
10453439	RF-760	0000094459	25-JAN-14 16:30:59	Original	P	KRISANN HUGHES
10456533	RF-760	0000094460	25-JAN-14 16:58:07	Original	P	SETH OLDHAM

AMWTP
Advanced Mixed Waste Treatment Project

AMWTP

Batch Report Coversheet

Date: 22-Sep-2014

Time: 08:23

**********Batch Comments**********

Written By	Date	Comment
CHINKLE	28-JAN-14 08:24:59	28-JAN-14 CHINKLE AKE This batch is returned for rework. AK does not concur with the recommended IDC change for containers10456533, 10453439, 10368557, 10366291, 10323541 and 10145322. CHD 01/28/14
SOLDHAM	30-JAN-14 08:21:37	Rework complete.
CHINKLE	30-JAN-14 10:33:20	28-JAN-14 CHINKLE AKE This batch is returned for rework. AK does not concur with the recommended IDC change for containers10456533, 10453439, 10368557, 10366291, 10323541 and 10145322. CHD 01/28/14 30-JAN-14 CHINKLE AKE Batch is promoted. chd 1/30/14
RBTHOMPSON	01-FEB-14 16:11:35	ITR review complete.
RBTHOMPSON	01-FEB-14 16:11:35	Drum #10368557, Change the Liquid comment to read " .28 pints in the bagging throughout the waste'. Please review and correct
RBTHOMPSON	01-FEB-14 16:11:35	Drum #10453439, Change Drum bag total to 2. Change Plastic bag for waste total to 2. Please review and correct
RBTHOMPSON	01-FEB-14 16:11:35	Demote to OPS.
KHUGHES	03-FEB-14 07:27:01	completed rework
RBTHOMPSON	06-FEB-14 07:41:06	Promote to SPM
RBTHOMPSON	06-FEB-14 07:41:06	Reviewed rework as complete.
DMARQUARDT	07-FEB-14 15:49:51	Promote.
DMARQUARDT	07-FEB-14 15:49:52	Reviewed and validated. Approve.

**********Batch E-Signature History**********

Approval ID	User ID	Signature Date	Comment
2684481	SOLDHAM	30-JAN-2014 08:21:37	Rework complete.
2685874	RBTHOMPSON	01-FEB-2014 16:11:35	Demote to OPS.
2686090	KHUGHES	03-FEB-2014 07:27:01	completed rework
2688827	RBTHOMPSON	06-FEB-2014 07:41:06	Promote to SPM
2689824	DMARQUARDT	07-FEB-2014 15:49:52	Reviewed and validated. Approve.

***** End of Batch Report Coversheet Report *****

AMWTP

Advanced Mixed Waste Treatment Project

AMWTP

Non-Conformance Report

Date: 22-Sep-2014

Time: 08:24

*****Batch NCR(s)*****

Batch Type	RTR	Batch ID	RTR14-00005		
Trackwise Number		Status		Opened Date	Closed Date

*****Container NCR(s)*****

Container ID or related Batch ID	Trackwise Number	Status	Opened Date	Closed Date
10135407	26410	CLOSED	08-MAR-07	11-FEB-14
10145322	83344	OPEN	24-JAN-14	
10220519	83355	CLOSED	25-JAN-14	01-JUL-14
10313178	67329	CLOSED	10-DEC-11	10-FEB-14
10313178	83349	CLOSED	24-JAN-14	17-APR-14
10336333	83358	CLOSED	25-JAN-14	24-APR-14
10369057	83343	OPEN	24-JAN-14	
10456533	83727	OPEN	11-FEB-14	
10494030	83353	OPEN	24-JAN-14	
10494031	83351	OPEN	24-JAN-14	
10494031	83352	OPEN	24-JAN-14	
10494032	83347	OPEN	24-JAN-14	
10182410	83381	OPEN	26-JAN-14	
10456533	83730	OPEN	11-FEB-14	
10494030	73858	OPEN	29-NOV-12	
10494032	73858	OPEN	29-NOV-12	

*****End of Non-Conformance Report*****

AMWTP
Advanced Mixed Waste Treatment Project

AMWTP

Checklist Report

Date: 22-Sep-2014

Time: 08:24

Batch Id RTR14-00005 **Open Date** 23-JAN-14 **Close Date** 25-JAN-14

Reviewer ROE THOMPSON **Approval Level** Independent Technical Reviewer

Approval Date 01-FEB-14 **Review Iteration** 1

Question Text	Answer	Requirement	Comment
1. Is the Batch Data Report (BDR) and Quality Assurance (QA) documentation complete with the following: o Real-Time Radiography (RTR) Batch Coversheet o Table of Contents (manual review only) o RTR Analysis reports o Replicate Scan o Replicate Comparison o Independent Observation o ITR checklist (Form-1412, manual review only) o Form-1491, Batch Data Report Supplemental Comment Form (manual review only) o Associated NCRs (referenced in Waste Tracking System [WTS]) o Audio/Video Recording References?	Yes		
2. Are there 20 containers or less in the batch?	Yes		
3. Was the image quality indicator (IQI) satisfactory?	Yes		
4. Does every container in the batch reference an audio/video recording?	Yes		
5. Is there a completed radiography data analysis for each container in the batch?	Yes		
6. Was each RTR Operator qualified at the time of the radiography event?	Yes		
7. Was the data generated in a technically correct manner using the correct revision of INST-OI-12, Real-Time Radiography Operations (Drum)?	Yes		
8. Was the correct procedure and revision documented on all analysis reports?	Yes		
9. Has the E-signature History review been performed?	Yes		
10. Does the RTR operator confirm that the physical form matched the waste stream description and waste matrix code?	Yes		
11. Does the packaging weight plus the net weight equal the gross weight of the container in the estimated waste material parameters?	Yes		
12. Were all entries into the waste material items section assigned to the correct waste material parameters?	Yes		
13. Has the description of rigid liners and layers of confinement been properly documented, as applicable?	Yes		
14. Was the presence or absence of prohibited items properly documented?	Yes		
15. If prohibited items were identified, have appropriate nonconformance reports (NCRs) been generated?	Yes		
16. Were the containers examined between October and April in compliance with the preheat requirements?	Yes		
17. Were all proper units and significant figures used for all reported volumes/weights?	Yes		
18. Was there a valid replicate scan performed (at least one container per day, or once per testing batch, whichever is less frequent)? o Record the container number, the replicate observation date in the comment section of this checklist. o Record any issues or concerns in the batch comment section.	Yes		Container 10034756; on January 25, 2014 the Replicate scan was performed by a qualified operator. There were small differences between the Original and Replicate. I agree with the Original operator No rework needed.
19. Was there a valid Operator Independent Observation (OIO) (not the replicate) performed (at least one container per day, or once per testing batch, whichever is less	Yes		Container 10220519; on January 25, 2014 the OIO scan was performed by a qualified operator. There were small differences between the Original

Batch Id RTR14-00005 **Open Date** 23-JAN-14 **Close Date** 25-JAN-14

Reviewer ROE THOMPSON **Approval Level** Independent Technical Reviewer

Approval Date 01-FEB-14 **Review Iteration** 1

Question Text	Answer	Requirement	Comment
frequent)? o Record the container number and the OIO date in the comment section of this checklist. o Record any issues or concerns in the batch comment section.			and OIO. I agree with the Original operator No rework needed
20. Were any significant differences identified that would affect the original disposition of the replicate and OIO, or affect data quality objectives (DQOs)? If so, ensure an NCR was generated and WTS flagged.	No		
21. Were the RTR quality assurance objectives (QAOs) met? o Precision o Accuracy o Completeness o Comparability	No		See Batch Comments.
22. Were any NCRs generated for containers containing prohibited items, or any non-conforming conditions that failed to meet DQOs or QAOs? o If so, include the NCRs, as appropriate, in the BDR.	Yes		
23. Were the rework requirements clearly identified in WTS or on the BDR?	Yes		See Batch Comments

Batch Id RTR14-00005 **Open Date** 23-JAN-14 **Close Date** 25-JAN-14

Reviewer ROE THOMPSON **Approval Level** Independent Technical Reviewer

Approval Date 06-FEB-14 **Review Iteration** 2

Question Text	Answer	Requirement	Comment
1. Is the Batch Data Report (BDR) and Quality Assurance (QA) documentation complete with the following: o Real-Time Radiography (RTR) Batch Coversheet o Table of Contents (manual review only) o RTR Analysis reports o Replicate Scan o Replicate Comparison o Independent Observation o ITR checklist (Form-1412, manual review only) o Form-1491, Batch Data Report Supplemental Comment Form (manual review only) o Associated NCRs (referenced in Waste Tracking System [WTS]) o Audio/Video Recording References?	Yes		
2. Are there 20 containers or less in the batch?	Yes		
3. Was the image quality indicator (IQI) satisfactory?	Yes		
4. Does every container in the batch reference an audio/video recording?	Yes		
5. Is there a completed radiography data analysis for each container in the batch?	Yes		
6. Was each RTR Operator qualified at the time of the radiography event?	Yes		
7. Was the data generated in a technically correct manner using the correct revision of INST-OI-12, Real-Time Radiography Operations (Drum)?	Yes		
8. Was the correct procedure and revision documented on all analysis reports?	Yes		
9. Has the E-signature History review been performed?	Yes		
10. Does the RTR operator confirm that the physical form matched the waste stream description and waste matrix code?	Yes		
11. Does the packaging weight plus the net weight equal the gross weight of the container in the estimated waste material parameters?	Yes		
12. Were all entries into the waste material items section assigned to the correct waste material parameters?	Yes		
13. Has the description of rigid liners and layers of confinement been properly documented, as applicable?	Yes		
14. Was the presence or absence of prohibited items properly documented?	Yes		
15. If prohibited items were identified, have appropriate nonconformance reports (NCRs) been generated?	Yes		
16. Were the containers examined between October and April in compliance with the preheat requirements?	Yes		
17. Were all proper units and significant figures used for all reported volumes/weights?	Yes		
18. Was there a valid replicate scan performed (at least one container per day, or once per testing batch, whichever is less frequent)? o Record the container number, the replicate observation date in the comment section of this checklist. o Record any issues or concerns in the batch comment section.	Yes		Container 10034756; on January 25, 2014 the Replicate scan was performed by a qualified operator. There were small differences between the Original and Replicate. I agree with the Original operator No rework needed.
19. Was there a valid Operator Independent Observation (OIO) (not the replicate) performed (at least one container per day, or once per testing batch, whichever is less	Yes		Container 10220519; on January 25, 2014 the OIO scan was performed by a qualified operator. There were small differences between the Original

Batch Id RTR14-00005 **Open Date** 23-JAN-14 **Close Date** 25-JAN-14

Reviewer	ROE THOMPSON	**Approval Level**	Independent Technical Reviewer
Approval Date	06-FEB-14	**Review Iteration**	2

Question Text	Answer	Requirement	Comment
frequent)? o Record the container number and the OIO date in the comment section of this checklist. o Record any issues or concerns in the batch comment section.			and OIO. I agree with the Original operator No rework needed
20. Were any significant differences identified that would affect the original disposition of the replicate and OIO, or affect data quality objectives (DQOs)? If so, ensure an NCR was generated and WTS flagged.	No		
21. Were the RTR quality assurance objectives (QAOs) met? o Precision o Accuracy o Completeness o Comparability	Yes		
22. Were any NCRs generated for containers containing prohibited items, or any non-conforming conditions that failed to meet DQOs or QAOs? o If so, include the NCRs, as appropriate, in the BDR.	Yes		
23. Were the rework requirements clearly identified in WTS or on the BDR?	Yes		See Batch Comments

Batch Id RTR14-00005 **Open Date** 23-JAN-14 **Close Date** 25-JAN-14

Reviewer DAVE MARQUARDT **Approval Level** SPM Data Validation

Approval Date 07-FEB-14 **Review Iteration** 1

Question Text	Answer	Requirement	Comment
(1) Has the batch received a Data Generation Level Independent Technical Review?	Yes	MP-TRUW-8.2, C3-10b(1)	
(2) Is the Independent Technical Review checklist complete?	Yes	MP-TRUW-8.2, C3-10b(1)	
(3) When identified, were polychlorinated biphenyls (PCBs), mercury, lead, or other hazardous contaminants consistent with the waste stream acceptable knowledge (AK) Summary Report(s) and/or AK documentation?	Yes	MP-TRUW-8.2, C4-3	
(4) Are any ignitable, corrosive, or reactive wastes identified in this waste?	No	MP-TRUW-8.2, C4-3	
(5) Are the packaging configurations identified on the real-time radiography (RTR) consistent with the waste stream AK Summary Report(s) and/or AK documentation?	Yes	MP-TRUW-8.2, C4-3	
(6) Do the containers in this batch contain typical waste items consistent with waste stream AK Summary Report(s) and/or AK documentation?	Yes	MP-TRUW-8.2, C4-3	
(7) Are the Waste Matrix Codes (WMCs) and physical form descriptions consistent with AK?	Yes	MP-TRUW-8.2, C4-3	
(8) Have all AK discrepancies been resolved and have all AK Resolution checklists been approved? Reference all waste stream AK documentation used in review of this data package.	N/A	MP-TRUW-8.2, C4-3	No discrepancies. RPT-TRUW-05. RPT-TRUW-06. RPT-TRUW-12. RPT-TRUW-56. All drums except 10135407, 10339021, 10425610, 10042328, 10310178, 10182410, 10034756, 10336333 and 10054382 were assigned an IDC at RTR. Previously they all had unknown or no historical information.
(9) Have all applicable Quality Assurance Objectives (QAOs) been met, including precision, accuracy, completeness, and comparability, by using the appropriate acceptance criteria for each as specified in MP-TRUW-8.2, Quality Assurance Project Plan Section C3-4? Precision ¿ Verified prior to use by tuning precisely enough to demonstrate compliance with QAOs through viewing an image test pattern, as evidenced by a satisfactory Image Quality Indicator (IQI). ¿ Have discrepancies, if any, between radiography operators been reconciled? Accuracy ¿ Use of a target to tune the image for maximum sharpness as evidenced by a satisfactory IQI and by requiring operators to successfully identify 100% of the required items in a training container during initial and subsequent qualifications. Completeness ¿ An audio/videotape (or equivalent media) of the radiography examination and a validated radiography data form will be obtained for 100% of the retrievably stored waste container in the program for all waste containers subject to radiography. Comparability ¿ Use of standardized radiography procedures and operator qualifications.	Yes	MP-TRUW-8.2, C3-4a	
(10) Do the waste container contents match the WMC, waste stream description and identify the absence of prohibited items?	Yes	MP-TRUW-8.2, C1-3 and B3-11	
(11) If residual liquids exist in the container, is an estimate of quantity given?	Yes	MP-TRUW-8.2, C1-3	
(12) Do the individual container reports contain the (a) IDC, (b) Waste Matrix Code, (c) audio/video recording reference, (d) gross container weight, (e) waste material parameter	Yes	MP-TRUW-8.2, C1-3 and C3-11a	

Batch Id RTR14-00005 **Open Date** 23-JAN-14 **Close Date** 25-JAN-14

Reviewer DAVE MARQUARDT **Approval Level** SPM Data Validation

Approval Date 07-FEB-14 **Review Iteration** 1

Question Text	Answer	Requirement	Comment
weights, and (f) signature and date of examination?			
(13) Have the IDC, WMC, and/or waste stream for all containers in the batch remained the same as originally assigned by the historical designation? If not, note the container number in the comment field and notify the Acceptable Knowledge Expert (AKE) if NCR does not exist on the WMC and IDC change.	No	MP-TRUW-8.2, C1-3 and C3-4a	All drums except 10135407, 10339021, 10425610, 10042328, 10310178, 10182410, 10034756, 10336333 and 10054382 were assigned an IDC at RTR. Previously they all had unknown or no historical information.
(14) Was a replicate scan performed by an independent operator on at least one container per day or once per testing batch, whichever is less frequent, by a qualified radiography operator that was not involved in the original scan of the waste container?	Yes	MP-TRUW-8.2, B1-3, C3-4a, and C3-10b(1)	
(15) Has an independent observation of one scan (not the replicate) been performed by a qualified operator that was not involved in the original scan of the waste container, at a rate of once per day or once per batch, whichever is less frequent? Record date of observation and any issues or concerns in the comment section.	Yes	MP-TRUW-8.2, C1-3 and C3-4a	Container 10220519. January 25, 2014. No issues.
(16) Did personnel having current qualifications perform all RTR examinations?	Yes	MP-TRUW-8.1, Appendix F	
(17) Verify the correct procedure and revision number were used for all containers in this batch.	Yes	MP-TRUW-8.2, C3-4a	
(18) Verify the audio and video checks were performed and are satisfactory.	Yes	MP-TRUW-8.2, C3-4a	
(19) Verify that there are 20 or fewer containers in the batch.	Yes	MP-TRUW-8.2, C1-3	
(20) Does the data for all containers within this batch meet the review, validation, and verification requirements? · Are proper units (e.g. Liters or pounds) and significant figure used? · Is the BDR complete (all pages identified in the BDR and numbered accordingly)? - RTR Batch Coversheet - Table of Contents (manual review only) - RTR Analysis reports - Replicate Scan - Replicate Comparison - Independent Observation - Form-1412, ITR checklist - Associated NCRs - Form, 1491, Batch Data Report Supplemental Comment Form, as applicable - Audio/Video Recording References	Yes	MP-TRUW-8.2, C3 10b(2)	
(21) Review all NCR(s) (open and closed). Can the batch be approved?	Yes	MP-TRUW-8.2, C3-13	
(22) Is all data associated with this BDR acceptable for signature release?	Yes	MP-TRUW-8.2, C3 10b(2)	

Batch Id RTR14-00005 **Open Date** 23-JAN-14 **Close Date** 25-JAN-14

Esignature History

Esig Approval ID	User ID	Esig Date	Approval Level	Comments
2689824	DMARQUARDT	07-FEB-14	SPM	Reviewed and validated. Approve.
2688827	RBTHOMPSON	06-FEB-14	ITR	Promote to SPM
2685874	RBTHOMPSON	01-FEB-14	ITR	Demote to OPS.

AMWTP
Advanced Mixed Waste Treatment Project

AMWTP

RTR Analysis Report

Date: 22-Sep-2014

Time: 08:24

Batch Id RTR14-00005 **Container Id** 10135407 **Analysis Id** 0000094410

Container Type A drum, 55 Gallon Drum (17H) **Analysis Status** Pass

RTR Date 23-JAN-2014 16:36 **Gross Weight** 577.710 Lbs. **Net Weight** 501.710 Lbs.

Equipment Z-213-101 **Waste Matrix Code** S3121 **IDC** RF-002 Second Stage Sludge

Recording Id 1RTR14-00007 **Procedure Id** INST-OI-12 **Revision** 52 **Approval Level** SPM

Is Test Pattern Resolution Ok? Yes **Start Side** A **Replicate** No **OIO** No

Audio Visual Ok? Yes **Operator** KKEARN

Result Comment Waste consists of a sludge

Package

IDC Correct Yes **Recommended IDC** **Summary Category** S3000

Idc Change Reason

Rigid Liner Present? Yes **LinerType** TYPE 1

Liner Punctured? Yes **Sharp Objects?** No

Liner Lid Present? Yes **Sharp Objects Are Protected?** Yes

Liner Lid Deformed? No **Layers Of Confinement** 1

Fill Factor 95

Bag Closure Method Twisted and Taped

Liquids

Liquid Present? No **Internal Container with Liquid** No

Internal Container with Liquid 0 pints **LA Candidate** No

Liquid Between Liner & Drum 0 pints **Containerized Liquid**

Total Liquid Amount 0 pints **Containerized Liquid Amt** 0 pints

Other Liquids 0 pints **Comment**

Prohibited Liquids Present No **Comment**

Contents-Drum or Box

	Value	Comment		Value	Comment
Lead?	No		Mercury Present?	No	
Wet Cell Batteries?	No		Explosives?	No	
Prohibited Compressed Gases?	No		PCBs Present?	No	
Aerosol Cans?	No		PCB Mass (lbs)	0	
Non-Mixed Hazardous Waste Present?	No		Sealed Containers Over 4L?	No	

Non-Radionuclide Pyrophoric Materials Present? No

Waste exhibiting the characteristics of Ignitability, Corrosivity or Reactivity Present? No

Wastes Incompatible with backfill, seal and panel closure materials, container and packaging materials,shipping container or other wastes? No

Impenetrable Dense Objects? No

Waste Material Items

Packaging Materials

Material Item	Quantity	Unit	Unit Wt(lbs)	Item Wt(lbs)
90 mil liner	1.000	EACH	16.000	16.000
Drum plastic bag	1.000	EACH	1.000	1.000

Waste Items byWeight

Material Item	Quantity	Unit	Unit Wt(lbs)	Item Wt(lbs)

Waste Items by Volume

Material Item	Quantity	Unit	Unit Wt(lbs)	Item Wt(lbs)

Batch Id RTR14-00005 **Container Id** 10135407 **Analysis Id** 0000094410

Waste Parameters

Waste Parameter	Remaining Weight %	Actual Weight Lbs
Iron-based Metals/Alloys	0.000	0.000
Aluminum-based Metals/Alloys	0.000	0.000
Other metals	0.000	0.000
Other Inorganic Materials	0.000	0.000
Cellulosics	0.000	0.000
Rubber	0.000	0.000
Plastic (Waste Materials)	0.000	0.000
Inorganic matrix	100.000	501.710
Organic matrix	0.000	0.000
Soils/gravel	0.000	0.000
Steel (packaging materials)	0.000	59.000
Plastic (packaging materials)	0.000	17.000
Cellulosics Packaging	0.000	0.000

Analysis Esignature History

Esig Approval Id	User Id	Esignature Date	Comment
2679147	KKEARN	23-JAN-2014 16:36	

AMWTP
Advanced Mixed Waste Treatment Project

AMWTP

RTR Analysis Report

Date: 22-Sep-2014
Time: 08:24

Batch Id RTR14-00005 **Container Id** 10369057 **Analysis Id** 0000094414

Container Type A drum, 55 Gallon Drum (17H) **Analysis Status** Pass

RTR Date 24-JAN-2014 10:31 **Gross Weight** 396.900 Lbs. **Net Weight** 335.900 Lbs.
Equipment Z-213-101 **Waste Matrix Code** S5490 **IDC** BN-524 Pad 1 Cells 1 and 2 Non-PCB Debris
Recording Id 1RTR14-00007 **Procedure Id** INST-OI-12 **Revision** 52 **Approval Level** SPM
Is Test Pattern Resolution Ok? Yes **Start Side** A **Replicate** No **OIO** No
Audio Visual Ok? Yes **Operator** AATWELL

Result Comment Waste appears to be busted up pieces of glass.
AK concurs with the recommended IDC, BN-524, for container 10369057. No AKR or NCR is necessary. CHD 01/28/14

Package

IDC Correct Yes **Recommended IDC** BN-524 **Summary Category** S5000
Idc Change Reason Waste is debris in the form of busted up glass

Rigid Liner Present? No **LinerType** NO LINER
Liner Punctured? N/A **Sharp Objects?** No
Liner Lid Present? No **Sharp Objects Are Protected?** Yes
Liner Lid Deformed? N/A **Layers Of Confinement** 2
Fill Factor 85
Bag Closure Method Twisted and Taped

Liquids

Liquid Present? No **Internal Container with Liquid** No
Internal Container with Liquid 0 pints **LA Candidate** No
Liquid Between Liner & Drum 0 pints **Containerized Liquid**
Total Liquid Amount 0 pints **Containerized Liquid Amt** 0 pints
Other Liquids 0 pints **Comment**
Prohibited Liquids Present No **Comment**

Contents-Drum or Box

	Value	Comment		Value	Comment
Lead?	No		Mercury Present?	No	
Wet Cell Batteries?	No		Explosives?	No	
Prohibited Compressed Gases?	No		PCBs Present?	No	
Aerosol Cans?	No		PCB Mass (lbs)	0	
Non-Mixed Hazardous Waste Present?	No		Sealed Containers Over 4L?	No	

Non-Radionuclide Pyrophoric Materials Present? No
Waste exhibiting the characteristics of Ignitability, Corrosivity or Reactivity Present? No
Wastes Incompatible with backfill, seal and panel closure materials, container and packaging materials,shipping container or other wastes? No
Impenetrable Dense Objects? Yes - Unacceptable aprox 50% of the waste in this container is impenetrable.

Waste Material Items

Packaging Materials

Material Item	Quantity	Unit	Unit Wt(lbs)	Item Wt(lbs)
Drum plastic bag	2.000	EACH	1.000	2.000

Waste Items byWeight

Material Item	Quantity	Unit	Unit Wt(lbs)	Item Wt(lbs)
Cardboard liner	1.000	EACH	4.000	4.000

Waste Items by Volume

Material Item	Quantity	Unit	Unit Wt(lbs)	Item Wt(lbs)
Oil-Dri (Inside 55 gal drum)	6.000	PINTS	0.420	2.520

Batch Id RTR14-00005 **Container Id** 10369057 **Analysis Id** 0000094414

Waste Parameters

Waste Parameter	Remaining Weight %	Actual Weight Lbs
Iron-based Metals/Alloys	0.000	0.000
Aluminum-based Metals/Alloys	0.000	0.000
Other metals	0.000	0.000
Other Inorganic Materials	100.000	331.900
Cellulosics	0.000	4.000
Rubber	0.000	0.000
Plastic (Waste Materials)	0.000	0.000
Inorganic matrix	0.000	0.000
Organic matrix	0.000	0.000
Soils/gravel	0.000	0.000
Steel (packaging materials)	0.000	59.000
Plastic (packaging materials)	0.000	2.000
Cellulosics Packaging	0.000	0.000

Analysis Esignature History

Esig Approval Id	User Id	Esignature Date	Comment
2680787	CHINKLE	28-JAN-2014 08:24	This batch is returned for rework. AK does not concur with the recommended IDC change for containers10456533, 10453439, 10368557, 10366291, 10323541 and 10145322. CHD 01/28/14
2679327	AATWELL	24-JAN-2014 10:31	

Batch Id RTR14-00005 **Container Id** 10145322 **Analysis Id** 0000094416

Container Type C drum, 83 Gallon **Analysis Status** Pass

RTR Date 24-JAN-2014 11:38 **Gross Weight** 800.415 Lbs. **Net Weight** 656.415 Lbs.

Equipment Z-213-101 **Waste Matrix Code** S5490 **IDC** RF-750 Pits 11 & 12 Debris

Recording Id 1RTR14-00007 **Procedure Id** INST-OI-12 **Revision** 52 **Approval Level** SPM

Is Test Pattern Resolution Ok? Yes **Start Side** A **Replicate** No **OIO** No

Audio Visual Ok? Yes **Operator** AATWELL

Result Comment Waste is primarily metal debris, pipe, sheet metal, angle iron, flat bar and misc metal debris.
AK does not concur with the recommended IDC of UN-00B for container 10145322 because waste is debris retrieved from Pits 11 and 12. Instead, AK recommends an IDC of RF-750. CHD 01/28/14
Rework to change IDC per AK. ESO 01/30/14
AK concurs with the recommended IDC, RF-750, for container 10145322. No AKR or NCR is necessary. CHD 01/30/14

Package

IDC Correct Yes **Recommended IDC** RF-750 **Summary Category** S5000

Idc Change Reason Per AK

Rigid Liner Present? No **LinerType** NO LINER

Liner Punctured? N/A **Sharp Objects?** No

Liner Lid Present? No **Sharp Objects Are Protected?** Yes

Liner Lid Deformed? N/A **Layers Of Confinement** 2

Fill Factor 95

Bag Closure Method Twisted and Taped

Liquids

Liquid Present? No **Internal Container with Liquid** No

Internal Container with Liquid 0 pints **LA Candidate** No

Liquid Between Liner & Drum 0 pints **Containerized Liquid**

Total Liquid Amount 0 pints **Containerized Liquid Amt** 0 pints

Other Liquids 0 pints **Comment**

Prohibited Liquids Present No **Comment**

Contents-Drum or Box

	Value	Comment		Value	Comment
Lead?	Yes, Acceptable	scrap lead	**Mercury Present?**	No	
Wet Cell Batteries?	No		**Explosives?**	No	
Prohibited Compressed Gases?	No		**PCBs Present?**	No	
Aerosol Cans?	No		**PCB Mass (lbs)**	0	
Non-Mixed Hazardous Waste Present?	No		**Sealed Containers Over 4L?**	No	

Non-Radionuclide Pyrophoric Materials Present? No

Waste exhibiting the characteristics of Ignitability, Corrosivity or Reactivity Present? No

Wastes Incompatible with backfill, seal and panel closure materials, container and packaging materials,shipping container or other wastes? No

Impenetrable Dense Objects? Yes - Unacceptable aprox bottom 5" of waste is impenetrable

Waste Material Items

Packaging Materials

Material Item	Quantity	Unit	Unit Wt(lbs)	Item Wt(lbs)
Drum plastic bag	2.000	EACH	1.000	2.000
55-GAL DRUM (17c)	1.000	EACH	59.000	59.000

Waste Items byWeight

Material Item	Quantity	Unit	Unit Wt(lbs)	Item Wt(lbs)
plastic waste	1.000	EACH	1.000	1.000
scrape lead	1.000	EACH	20.000	20.000

Waste Items by Volume

Material Item	Quantity	Unit	Unit Wt(lbs)	Item Wt(lbs)
Oil-Dri (Inside 55 gal drum)	75.000	PINTS	0.420	31.500

Batch Id RTR14-00005 **Container Id** 10145322 **Analysis Id** 0000094416

Waste Parameters

Waste Parameter	Remaining Weight %	Actual Weight Lbs
Iron-based Metals/Alloys	100.000	603.915
Aluminum-based Metals/Alloys	0.000	0.000
Other metals	0.000	20.000
Other Inorganic Materials	0.000	31.500
Cellulosics	0.000	0.000
Rubber	0.000	0.000
Plastic (Waste Materials)	0.000	1.000
Inorganic matrix	0.000	0.000
Organic matrix	0.000	0.000
Soils/gravel	0.000	0.000
Steel (packaging materials)	0.000	142.000
Plastic (packaging materials)	0.000	2.000
Cellulosics Packaging	0.000	0.000

Analysis Esignature History

Esig Approval Id	User Id	Esignature Date	Comment
2684842	CHINKLE	30-JAN-2014 10:33	Batch is promoted. chd 1/30/14
2684469	SOLDHAM	30-JAN-2014 08:13	
2680791	CHINKLE	28-JAN-2014 08:24	This batch is returned for rework. AK does not concur with the recommended IDC change for containers10456533, 10453439, 10368557, 10366291, 10323541 and 10145322. CHD 01/28/14
2679346	AATWELL	24-JAN-2014 11:38	

Batch Id RTR14-00005 **Container Id** 10339021 **Analysis Id** 0000094418

Container Type C drum, 83 Gallon **Analysis Status** Pass

RTR Date 24-JAN-2014 11:56 **Gross Weight** 443.205 Lbs. **Net Weight** 300.205 Lbs.

Equipment Z-213-101 **Waste Matrix Code** S3221 **IDC** RF-095 Sewer Sludge

Recording Id 1RTR14-00007 **Procedure Id** INST-OI-12 **Revision** 52 **Approval Level** SPM

Is Test Pattern Resolution Ok? Yes **Start Side** A **Replicate** No **OIO** No

Audio Visual Ok? Yes **Operator** AATWELL

Result Comment Waste appears to be sludge.

Package

IDC Correct Yes **Recommended IDC** **Summary Category** S3000

Idc Change Reason

Rigid Liner Present? No **LinerType** NO LINER

Liner Punctured? N/A **Sharp Objects?** No

Liner Lid Present? No **Sharp Objects Are Protected?** Yes

Liner Lid Deformed? N/A **Layers Of Confinement** 2

Fill Factor 85

Bag Closure Method Twisted and Taped

Liquids

Liquid Present? No **Internal Container with Liquid** No

Internal Container with Liquid 0 pints **LA Candidate** No

Liquid Between Liner & Drum 0 pints **Containerized Liquid**

Total Liquid Amount 0 pints **Containerized Liquid Amt** 0 pints

Other Liquids 0 pints **Comment**

Prohibited Liquids Present No **Comment**

Contents-Drum or Box

	Value	Comment		Value	Comment
Lead?	No		**Mercury Present?**	No	
Wet Cell Batteries?	No		**Explosives?**	No	
Prohibited Compressed Gases?	No		**PCBs Present?**	No	
Aerosol Cans?	No		**PCB Mass (lbs)**	0	
Non-Mixed Hazardous Waste Present?	No		**Sealed Containers Over 4L?**	No	

Non-Radionuclide Pyrophoric Materials Present? No

Waste exhibiting the characteristics of Ignitability, Corrosivity or Reactivity Present? No

Wastes Incompatible with backfill, seal and panel closure materials, container and packaging materials,shipping container or other wastes? No

Impenetrable Dense Objects? No

Waste Material Items

Packaging Materials

Material Item	Quantity	Unit	Unit Wt(lbs)	Item Wt(lbs)
Drum plastic bag	1.000	EACH	1.000	1.000
55-GAL DRUM (17c)	1.000	EACH	59.000	59.000

Waste Items byWeight

Material Item	Quantity	Unit	Unit Wt(lbs)	Item Wt(lbs)
Plastic bag for waste	1.000	EACH	0.250	0.250

Waste Items by Volume

Material Item	Quantity	Unit	Unit Wt(lbs)	Item Wt(lbs)

Batch Id RTR14-00005 **Container Id** 10339021 **Analysis Id** 0000094418

Waste Parameters

Waste Parameter	Remaining Weight %	Actual Weight Lbs
Iron-based Metals/Alloys	0.000	0.000
Aluminum-based Metals/Alloys	0.000	0.000
Other metals	0.000	0.000
Other Inorganic Materials	0.000	0.000
Cellulosics	0.000	0.000
Rubber	0.000	0.000
Plastic (Waste Materials)	0.000	0.250
Inorganic matrix	0.000	0.000
Organic matrix	100.000	299.955
Soils/gravel	0.000	0.000
Steel (packaging materials)	0.000	142.000
Plastic (packaging materials)	0.000	1.000
Cellulosics Packaging	0.000	0.000

Analysis Esignature History

Esig Approval Id	User Id	Esignature Date	Comment
2679348	AATWELL	24-JAN-2014 11:56	

Batch Id RTR14-00005 **Container Id** 10425610 **Analysis Id** 0000094422

Container Type 83u 83 Gallon unmarked and non-DOT apprvd cntr **Analysis Status** Pass

RTR Date 24-JAN-2014 13:27 **Gross Weight** 749.700 Lbs. **Net Weight** 605.700 Lbs.

Equipment Z-213-101 **Waste Matrix Code** S3150 **IDC** RF-004 Special Setups

Recording Id 1RTR14-00007 **Procedure Id** INST-OI-12 **Revision** 52 **Approval Level** SPM

Is Test Pattern Resolution Ok? Yes **Start Side** A **Replicate** No **OIO** No

Audio Visual Ok? Yes **Operator** DGREEN

Result Comment Waste consists of sludge.

Package

IDC Correct Yes **Recommended IDC** **Summary Category** S3000

Idc Change Reason

Rigid Liner Present? No **LinerType** NO LINER

Liner Punctured? N/A **Sharp Objects?** No

Liner Lid Present? No **Sharp Objects Are Protected?** Yes

Liner Lid Deformed? N/A **Layers Of Confinement** 2

Fill Factor 97

Bag Closure Method Twisted and Taped

Liquids

Liquid Present? No **Internal Container with Liquid** No

Internal Container with Liquid 0 pints **LA Candidate** No

Liquid Between Liner & Drum 0 pints **Containerized Liquid**

Total Liquid Amount 0 pints **Containerized Liquid Amt** 0 pints

Other Liquids 0 pints **Comment**

Prohibited Liquids Present No **Comment**

Contents-Drum or Box

	Value	Comment		Value	Comment
Lead?	No		**Mercury Present?**	No	
Wet Cell Batteries?	No		**Explosives?**	No	
Prohibited Compressed Gases?	No		**PCBs Present?**	No	
Aerosol Cans?	No		**PCB Mass (lbs)**	0	
Non-Mixed Hazardous Waste Present?	No		**Sealed Containers Over 4L?**	No	

Non-Radionuclide Pyrophoric Materials Present? No

Waste exhibiting the characteristics of Ignitability, Corrosivity or Reactivity Present? No

Wastes Incompatible with backfill, seal and panel closure materials, container and packaging materials,shipping container or other wastes? No

Impenetrable Dense Objects? No

Waste Material Items

Packaging Materials

Material Item	Quantity	Unit	Unit Wt(lbs)	Item Wt(lbs)
Drum plastic bag	2.000	EACH	1.000	2.000
55-GAL DRUM (17c)	1.000	EACH	59.000	59.000

Waste Items byWeight

Material Item	Quantity	Unit	Unit Wt(lbs)	Item Wt(lbs)

Waste Items by Volume

Material Item	Quantity	Unit	Unit Wt(lbs)	Item Wt(lbs)

Batch Id RTR14-00005 **Container Id** 10425610 **Analysis Id** 0000094422

Waste Parameters

Waste Parameter	Remaining Weight %	Actual Weight Lbs
Iron-based Metals/Alloys	0.000	0.000
Aluminum-based Metals/Alloys	0.000	0.000
Other metals	0.000	0.000
Other Inorganic Materials	0.000	0.000
Cellulosics	0.000	0.000
Rubber	0.000	0.000
Plastic (Waste Materials)	0.000	0.000
Inorganic matrix	100.000	605.700
Organic matrix	0.000	0.000
Soils/gravel	0.000	0.000
Steel (packaging materials)	0.000	142.000
Plastic (packaging materials)	0.000	2.000
Cellulosics Packaging	0.000	0.000

Analysis Esignature History

Esig Approval Id	User Id	Esignature Date	Comment
2679360	DGREEN	24-JAN-2014 13:27	

Batch Id RTR14-00005 **Container Id** 10494032 **Analysis Id** 0000094424

Container Type 7A85 85 Gallon Open Head drum, DOT 7A **Analysis Status** Pass

RTR Date 24-JAN-2014 14:14 **Gross Weight** 238.140 Lbs. **Net Weight** 158.140 Lbs.

Equipment Z-213-101 **Waste Matrix Code** S5490 **IDC** BN-600 WMF-676 PCB Contaminated Debris

Recording Id 1RTR14-00007 **Procedure Id** INST-OI-12 **Revision** 52 **Approval Level** SPM

Is Test Pattern Resolution Ok? Yes **Start Side** A **Replicate** No **OIO** No

Audio Visual Ok? Yes **Operator** DGREEN

Result Comment Waste consists of metal - an AMWTP "silver" drum contains - crushed drums, wire, electrical terminal blocks.

Package

IDC Correct Yes **Recommended IDC** **Summary Category** S5000

Idc Change Reason

Rigid Liner Present? No **LinerType** NO LINER

Liner Punctured? N/A **Sharp Objects?** No

Liner Lid Present? No **Sharp Objects Are Protected?** Yes

Liner Lid Deformed? N/A **Layers Of Confinement** 2

Fill Factor 90

Bag Closure Method Twisted and Taped

Liquids

Liquid Present? Yes **Internal Container with Liquid** No

Internal Container with Liquid 0 pints **LA Candidate** No

Liquid Between Liner & Drum 0 pints **Containerized Liquid**

Total Liquid Amount .06 pints **Containerized Liquid Amt** 0 pints

Other Liquids .06 pints **Comment** liquid in bagging at the bottom of the waste

Prohibited Liquids Present Yes **Comment** Liquid with PCBs

Contents-Drum or Box

	Value	Comment		Value	Comment
Lead?	No		**Mercury Present?**	No	
Wet Cell Batteries?	No		**Explosives?**	No	
Prohibited Compressed Gases?	No		**PCBs Present?**	Yes - Prohibited	PCB IDC with liquid.
Aerosol Cans?	No		**PCB Mass (lbs)**	158.14	
Non-Mixed Hazardous Waste Present?	No		**Sealed Containers Over 4L?**	No	

Non-Radionuclide Pyrophoric Materials Present? No

Waste exhibiting the characteristics of Ignitability, Corrosivity or Reactivity Present? No

Wastes Incompatible with backfill, seal and panel closure materials, container and packaging materials,shipping container or other wastes? No

Impenetrable Dense Objects? No

Waste Material Items

Packaging Materials

Material Item	Quantity	Unit	Unit Wt(lbs)	Item Wt(lbs)

Waste Items byWeight

Material Item	Quantity	Unit	Unit Wt(lbs)	Item Wt(lbs)
plastic waste	1.000	EACH	5.000	5.000
lifting strap	1.000	EACH	6.000	6.000
Drum Bag	2.000	EACH	1.000	2.000

Waste Items by Volume

Material Item	Quantity	Unit	Unit Wt(lbs)	Item Wt(lbs)
Liquids for Other Inorganics	0.060	PINTS	1.000	0.060

Batch Id RTR14-00005 **Container Id** 10494032 **Analysis Id** 0000094424

Waste Parameters

Waste Parameter	Remaining Weight %	Actual Weight Lbs
Iron-based Metals/Alloys	100.000	148.080
Aluminum-based Metals/Alloys	0.000	0.000
Other metals	0.000	0.000
Other Inorganic Materials	0.000	0.060
Cellulosics	0.000	0.000
Rubber	0.000	1.500
Plastic (Waste Materials)	0.000	8.500
Inorganic matrix	0.000	0.000
Organic matrix	0.000	0.000
Soils/gravel	0.000	0.000
Steel (packaging materials)	0.000	80.000
Plastic (packaging materials)	0.000	0.000
Cellulosics Packaging	0.000	0.000

Analysis Esignature History

Esig Approval Id	User Id	Esignature Date	Comment
2679375	DGREEN	24-JAN-2014 14:14	

Batch Id RTR14-00005 **Container Id** 10042328 **Analysis Id** 0000094425

Container Type C drum, 83 Gallon **Analysis Status** Pass

RTR Date 24-JAN-2014 14:56 **Gross Weight** 249.165 Lbs. **Net Weight** 105.165 Lbs.

Equipment Z-213-101 **Waste Matrix Code** S5300 **IDC** RF-337 Plastics, Teflon, Washables, PVC

Recording Id 1RTR14-00007 **Procedure Id** INST-OI-12 **Revision** 52 **Approval Level** SPM

Is Test Pattern Resolution Ok? Yes **Start Side** A **Replicate** No **OIO** No

Audio Visual Ok? Yes **Operator** DGREEN

Result Comment Waste consists of plastic sheeting & a couple poly bottles.

Package

IDC Correct Yes **Recommended IDC** **Summary Category** S5000

Idc Change Reason

Rigid Liner Present? No **LinerType** NO LINER

Liner Punctured? N/A **Sharp Objects?** No

Liner Lid Present? No **Sharp Objects Are Protected?** Yes

Liner Lid Deformed? N/A **Layers Of Confinement** 3

Fill Factor 83

Bag Closure Method Twisted and Taped

Liquids

Liquid Present? Yes **Internal Container with Liquid** Yes

Internal Container with Liquid .09 pints **LA Candidate** No

Liquid Between Liner & Drum 0 pints **Containerized Liquid**

Total Liquid Amount .12 pints **Containerized Liquid Amt** 0 pints

Other Liquids .03 pints **Comment** Liquid in bagging, & liquid in a poly bottle at the bottom of the waste

Prohibited Liquids Present No **Comment**

Contents-Drum or Box

	Value	Comment		Value	Comment
Lead?	No		**Mercury Present?**	No	
Wet Cell Batteries?	No		**Explosives?**	No	
Prohibited Compressed Gases?	No		**PCBs Present?**	No	
Aerosol Cans?	No		**PCB Mass (lbs)**	0	
Non-Mixed Hazardous Waste Present?	No		**Sealed Containers Over 4L?**	No	

Non-Radionuclide Pyrophoric Materials Present? No

Waste exhibiting the characteristics of Ignitability, Corrosivity or Reactivity Present? No

Wastes Incompatible with backfill, seal and panel closure materials, container and packaging materials,shipping container or other wastes? No

Impenetrable Dense Objects? No

Waste Material Items

Packaging Materials

Material Item	Quantity	Unit	Unit Wt(lbs)	Item Wt(lbs)
Drum plastic bag	2.000	EACH	1.000	2.000
55-GAL DRUM (17c)	1.000	EACH	59.000	59.000

Waste Items byWeight

Material Item	Quantity	Unit	Unit Wt(lbs)	Item Wt(lbs)
metal waste	1.000	EACH	1.000	1.000
paper, rags, coveralls	1.000	EACH	5.000	5.000
safety shoes	1.000	EACH	4.000	4.000
Cardboard liner	1.000	EACH	4.000	4.000
Plastic bag for waste	1.000	EACH	0.250	0.250

Batch Id RTR14-00005 **Container Id** 10042328 **Analysis Id** 0000094425

Waste Items by Volume

Material Item	Quantity	Unit	Unit Wt(lbs)	Item Wt(lbs)
Oil-Dri (Inside 55 gal drum)	12.000	PINTS	0.420	5.040
Liquids for Other Inorganics	0.120	PINTS	1.000	0.120

Waste Parameters

Waste Parameter	Remaining Weight %	Actual Weight Lbs
Iron-based Metals/Alloys	0.000	2.000
Aluminum-based Metals/Alloys	0.000	0.000
Other metals	0.000	0.000
Other Inorganic Materials	0.000	5.160
Cellulosics	0.000	9.000
Rubber	0.000	3.000
Plastic (Waste Materials)	100.000	86.005
Inorganic matrix	0.000	0.000
Organic matrix	0.000	0.000
Soils/gravel	0.000	0.000
Steel (packaging materials)	0.000	142.000
Plastic (packaging materials)	0.000	2.000
Cellulosics Packaging	0.000	0.000

Analysis Esignature History

Esig Approval Id	User Id	Esignature Date	Comment
2679390	DGREEN	24-JAN-2014 14:56	

Batch Id RTR14-00005 **Container Id** 10313178 **Analysis Id** 0000094427

Container Type C drum, 83 Gallon **Analysis Status** Pass

RTR Date 24-JAN-2014 15:16 **Gross Weight** 202.860 **Lbs.** **Net Weight** 59.860 **Lbs**

Equipment Z-213-101 **Waste Matrix Code** S5490 **IDC** RF-750 Pits 11 & 12 Debris

Recording Id 1RTR14-00007 **Procedure Id** INST-OI-12 **Revision** 52 **Approval Level** SPM

Is Test Pattern Resolution Ok? Yes **Start Side** A **Replicate** No **OIO** No

Audio Visual Ok? Yes **Operator** DGREEN

Result Comment Waste consists of plastic sheeting.

Package

IDC Correct Yes **Recommended IDC** **Summary Category** S5000

Idc Change Reason

Rigid Liner Present? No **LinerType** NO LINER

Liner Punctured? N/A **Sharp Objects?** No

Liner Lid Present? No **Sharp Objects Are Protected?** Yes

Liner Lid Deformed? N/A **Layers Of Confinement** 1

Fill Factor 85

Bag Closure Method Twisted and Taped

Liquids

Liquid Present? No **Internal Container with Liquid** No

Internal Container with Liquid 0 pints **LA Candidate** No

Liquid Between Liner & Drum 0 pints **Containerized Liquid**

Total Liquid Amount 0 pints **Containerized Liquid Amt** 0 pints

Other Liquids 0 pints **Comment**

Prohibited Liquids Present No **Comment**

Contents-Drum or Box

	Value	Comment		Value	Comment
Lead?	No		**Mercury Present?**	No	
Wet Cell Batteries?	No		**Explosives?**	No	
Prohibited Compressed Gases?	Yes	aerosol can without liquid	**PCBs Present?**	No	
Aerosol Cans?	Yes	aerosol can without liquid	**PCB Mass (lbs)**	0	
Non-Mixed Hazardous Waste Present?	No		**Sealed Containers Over 4L?**	No	

Non-Radionuclide Pyrophoric Materials Present? No

Waste exhibiting the characteristics of Ignitability, Corrosivity or Reactivity Present? No

Wastes Incompatible with backfill, seal and panel closure materials, container and packaging materials,shipping container or other wastes? No

Impenetrable Dense Objects? No

Waste Material Items

Packaging Materials

Material Item	Quantity	Unit	Unit Wt(lbs)	Item Wt(lbs)
Drum plastic bag	1.000	EACH	1.000	1.000
55-GAL DRUM (17c)	1.000	EACH	59.000	59.000

Waste Items byWeight

Material Item	Quantity	Unit	Unit Wt(lbs)	Item Wt(lbs)
aerosol can	1.000	EACH	0.500	0.500
metal waste	1.000	EACH	3.000	3.000
paper rags	1.000	EACH	8.000	8.000

Waste Items by Volume

Material Item	Quantity	Unit	Unit Wt(lbs)	Item Wt(lbs)
Oil-Dri (Inside 55 gal drum)	12.000	PINTS	0.420	5.040

Batch Id RTR14-00005 **Container Id** 10313178 **Analysis Id** 0000094427

Waste Parameters

Waste Parameter	Remaining Weight %	Actual Weight Lbs
Iron-based Metals/Alloys	0.000	3.500
Aluminum-based Metals/Alloys	0.000	0.000
Other metals	0.000	0.000
Other Inorganic Materials	0.000	5.040
Cellulosics	0.000	8.000
Rubber	0.000	0.000
Plastic (Waste Materials)	100.000	43.320
Inorganic matrix	0.000	0.000
Organic matrix	0.000	0.000
Soils/gravel	0.000	0.000
Steel (packaging materials)	0.000	142.000
Plastic (packaging materials)	0.000	1.000
Cellulosics Packaging	0.000	0.000

Analysis Esignature History

Esig Approval Id	User Id	Esignature Date	Comment
2679401	DGREEN	24-JAN-2014 15:16	

Batch Id RTR14-00005 **Container Id** 10494031 **Analysis Id** 0000094430

Container Type 7A85 85 Gallon Open Head drum, DOT 7A **Analysis Status** Pass

RTR Date 24-JAN-2014 16:52 **Gross Weight** 337.365 Lbs. **Net Weight** 257.365 Lbs.
Equipment Z-213-101 **Waste Matrix Code** S5490 **IDC** BN-600 WMF-676 PCB Contaminated Debris
Recording Id 1RTR14-00007 **Procedure Id** INST-OI-12 **Revision** 52 **Approval Level** SPM
Is Test Pattern Resolution Ok? Yes **Start Side** A **Replicate** No **OIO** No
Audio Visual Ok? Yes **Operator** DGREEN

Result Comment Waste consists of metal - AMWTP "silver" drum, sheetmetal, & a transformer winding.

Package

IDC Correct Yes **Recommended IDC** **Summary Category** S5000

Idc Change Reason
Rigid Liner Present? No **LinerType** NO LINER
Liner Punctured? N/A **Sharp Objects?** No
Liner Lid Present? No **Sharp Objects Are Protected?** Yes
Liner Lid Deformed? N/A **Layers Of Confinement** 2
Fill Factor 90
Bag Closure Method Twisted and Taped

Liquids

Liquid Present? No **Internal Container with Liquid** No
Internal Container with Liquid 0 pints **LA Candidate** No
Liquid Between Liner & Drum 0 pints **Containerized Liquid**
Containerized Liquid Amt 0 pints
Total Liquid Amount 0 pints
Other Liquids 0 pints **Comment**
Prohibited Liquids Present No **Comment**

Contents-Drum or Box

	Value	Comment		Value	Comment
Lead?	No		**Mercury Present?**	No	
Wet Cell Batteries?	No		**Explosives?**	No	
Prohibited Compressed Gases?	No		**PCBs Present?**	Yes - Prohibited	PCB S5000
Aerosol Cans?	No		**PCB Mass (lbs)**	257.37	
Non-Mixed Hazardous Waste Present?	No		**Sealed Containers Over 4L?**	No	

Non-Radionuclide Pyrophoric Materials Present? No
Waste exhibiting the characteristics of Ignitability, Corrosivity or Reactivity Present? No
Wastes Incompatible with backfill, seal and panel closure materials, container and packaging materials,shipping container or other wastes? No
Impenetrable Dense Objects? Yes - Unacceptable item 10-12" x 10-12" appears to be a transformer winding

Waste Material Items

Packaging Materials

Material Item	Quantity	Unit	Unit Wt(lbs)	Item Wt(lbs)

Waste Items byWeight

Material Item	Quantity	Unit	Unit Wt(lbs)	Item Wt(lbs)
wood, cardboard	1.000	EACH	25.000	25.000
drum sling	1.000	EACH	6.000	6.000
Drum Bag	2.000	EACH	1.000	2.000

Waste Items by Volume

Material Item	Quantity	Unit	Unit Wt(lbs)	Item Wt(lbs)

Batch Id RTR14-00005 **Container Id** 10494031 **Analysis Id** 0000094430

Waste Parameters

Waste Parameter	Remaining Weight %	Actual Weight Lbs
Iron-based Metals/Alloys	100.000	227.365
Aluminum-based Metals/Alloys	0.000	0.000
Other metals	0.000	0.000
Other Inorganic Materials	0.000	0.000
Cellulosics	0.000	25.000
Rubber	0.000	1.500
Plastic (Waste Materials)	0.000	3.500
Inorganic matrix	0.000	0.000
Organic matrix	0.000	0.000
Soils/gravel	0.000	0.000
Steel (packaging materials)	0.000	80.000
Plastic (packaging materials)	0.000	0.000
Cellulosics Packaging	0.000	0.000

Analysis Esignature History

Esig Approval Id	User Id	Esignature Date	Comment
2679443	DGREEN	24-JAN-2014 17:21	
2679431	DGREEN	24-JAN-2014 16:52	

Batch Id RTR14-00005 **Container Id** 10494030 **Analysis Id** 0000094438

Container Type 7A85 85 Gallon Open Head drum, DOT 7A **Analysis Status** Pass

RTR Date 24-JAN-2014 17:51 **Gross Weight** 295.470 Lbs. **Net Weight** 215.470 Lbs.
Equipment Z-213-101 **Waste Matrix Code** S5490 **IDC** BN-600 WMF-676 PCB Contaminated Debris
Recording Id 1RTR14-00007 **Procedure Id** INST-OI-12 **Revision** 52 **Approval Level** SPM
Is Test Pattern Resolution Ok? Yes **Start Side** A **Replicate** No **OIO** No
Audio Visual Ok? Yes **Operator** DGREEN

Result Comment Waste consists of metal - AMWTP "silver" drum, piping, angle iron, sheetmetal, wire, conduit, misc. small electrical items.

Package

IDC Correct Yes **Recommended IDC** **Summary Category** S5000
Idc Change Reason
Rigid Liner Present? No **LinerType** NO LINER
Liner Punctured? N/A **Sharp Objects?** Yes
Liner Lid Present? No **Sharp Objects Are Protected?** No
Liner Lid Deformed? N/A **Layers Of Confinement** 2
Fill Factor 90
Bag Closure Method Twisted and Taped

Liquids

Liquid Present? No **Internal Container with Liquid** No
Internal Container with Liquid 0 pints **LA Candidate** No
Liquid Between Liner & Drum 0 pints **Containerized Liquid**
Total Liquid Amount 0 pints **Containerized Liquid Amt** 0 pints
Other Liquids 0 pints **Comment**
Prohibited Liquids Present No **Comment**

Contents-Drum or Box

	Value	Comment		Value	Comment
Lead?	No		Mercury Present?	No	
Wet Cell Batteries?	No		Explosives?	No	
Prohibited Compressed Gases?	No		PCBs Present?	Yes - Prohibited	PCB IDC - S5000
Aerosol Cans?	No		PCB Mass (lbs)	215.47	
Non-Mixed Hazardous Waste Present?	No		Sealed Containers Over 4L?	No	

Non-Radionuclide Pyrophoric Materials Present? No
Waste exhibiting the characteristics of Ignitability, Corrosivity or Reactivity Present? No
Wastes Incompatible with backfill, seal and panel closure materials, container and packaging materials,shipping container or other wastes? No
Impenetrable Dense Objects? No

Waste Material Items

Packaging Materials

Material Item	Quantity	Unit	Unit Wt(lbs)	Item Wt(lbs)

Waste Items byWeight

Material Item	Quantity	Unit	Unit Wt(lbs)	Item Wt(lbs)
drum sling	1.000	EACH	6.000	6.000
wood, paper, rags	1.000	EACH	15.000	15.000
Drum Bag	2.000	EACH	1.000	2.000

Waste Items by Volume

Material Item	Quantity	Unit	Unit Wt(lbs)	Item Wt(lbs)
Oil-Dri (Inside 55 gal drum)	10.000	PINTS	0.420	4.200

Batch Id RTR14-00005 **Container Id** 10494030 **Analysis Id** 0000094438

Waste Parameters

Waste Parameter	Remaining Weight %	Actual Weight Lbs
Iron-based Metals/Alloys	100.000	191.270
Aluminum-based Metals/Alloys	0.000	0.000
Other metals	0.000	0.000
Other Inorganic Materials	0.000	4.200
Cellulosics	0.000	15.000
Rubber	0.000	1.500
Plastic (Waste Materials)	0.000	3.500
Inorganic matrix	0.000	0.000
Organic matrix	0.000	0.000
Soils/gravel	0.000	0.000
Steel (packaging materials)	0.000	80.000
Plastic (packaging materials)	0.000	0.000
Cellulosics Packaging	0.000	0.000

Analysis Esignature History

Esig Approval Id	User Id	Esignature Date	Comment
2679453	DGREEN	24-JAN-2014 17:51	

Batch Id RTR14-00005 **Container Id** 10323541 **Analysis Id** 0000094439

Container Type C drum, 83 Gallon **Analysis Status** Pass

RTR Date 24-JAN-2014 18:06 **Gross Weight** 171.990 Lbs. **Net Weight** 27.990 Lbs

Equipment Z-213-101 **Waste Matrix Code** S5490 **IDC** RF-750 Pits 11 & 12 Debris

Recording Id 1RTR14-00007 **Procedure Id** INST-OI-12 **Revision** 52 **Approval Level** SPM

Is Test Pattern Resolution Ok? Yes **Start Side** A **Replicate** No **OIO** No

Audio Visual Ok? Yes **Operator** DGREEN

Result Comment Waste consists of paper, rags, & coveralls.
AK does not concur with the recommended IDC of UN-00B for container 10323541 because waste is debris retrieved from Pits 11 and 12. Instead, AK recommends an IDC of RF-750. CHD 01/28/14
Rework to change IDC per AK. ESO 01/30/14
AK concurs with the recommended IDC, RF-750, for container 10323541. No AKR or NCR is necessary. CHD 01/30/14

Package

IDC Correct Yes **Recommended IDC** RF-750 **Summary Category** S5000

Idc Change Reason Per AK

Rigid Liner Present? No **LinerType** NO LINER

Liner Punctured? N/A **Sharp Objects?** No

Liner Lid Present? No **Sharp Objects Are Protected?** Yes

Liner Lid Deformed? N/A **Layers Of Confinement** 3

Fill Factor 85

Bag Closure Method Twisted and Taped

Liquids

Liquid Present? No **Internal Container with Liquid** No

Internal Container with Liquid 0 pints **LA Candidate** No

Liquid Between Liner & Drum 0 pints **Containerized Liquid**

Total Liquid Amount 0 pints **Containerized Liquid Amt** 0 pints

Other Liquids 0 pints **Comment**

Prohibited Liquids Present No **Comment**

Contents-Drum or Box

	Value	Comment		Value	Comment
Lead?	No		**Mercury Present?**	No	
Wet Cell Batteries?	No		**Explosives?**	No	
Prohibited Compressed Gases?	No		**PCBs Present?**	No	
Aerosol Cans?	No		**PCB Mass (lbs)**	0	
Non-Mixed Hazardous Waste Present?	No		**Sealed Containers Over 4L?**	No	

Non-Radionuclide Pyrophoric Materials Present? No

Waste exhibiting the characteristics of Ignitability, Corrosivity or Reactivity Present? No

Wastes Incompatible with backfill, seal and panel closure materials, container and packaging materials,shipping container or other wastes? No

Impenetrable Dense Objects? No

Waste Material Items

Packaging Materials

Material Item	Quantity	Unit	Unit Wt(lbs)	Item Wt(lbs)
Drum plastic bag	2.000	EACH	1.000	2.000
55-GAL DRUM (17c)	1.000	EACH	59.000	59.000

Waste Items byWeight

Material Item	Quantity	Unit	Unit Wt(lbs)	Item Wt(lbs)
plastic waste	1.000	EACH	3.000	3.000
metal waste	1.000	EACH	7.000	7.000
Plastic bag for waste	1.000	EACH	0.250	0.250

Batch Id RTR14-00005 **Container Id** 10323541 **Analysis Id** 0000094439

Waste Items by Volume

Material Item	Quantity	Unit	Unit Wt(lbs)	Item Wt(lbs)
Oil-Dri (Inside 55 gal drum)	0.500	PINTS	0.420	0.210

Waste Parameters

Waste Parameter	Remaining Weight %	Actual Weight Lbs
Iron-based Metals/Alloys	0.000	7.000
Aluminum-based Metals/Alloys	0.000	0.000
Other metals	0.000	0.000
Other Inorganic Materials	0.000	0.210
Cellulosics	100.000	17.530
Rubber	0.000	0.000
Plastic (Waste Materials)	0.000	3.250
Inorganic matrix	0.000	0.000
Organic matrix	0.000	0.000
Soils/gravel	0.000	0.000
Steel (packaging materials)	0.000	142.000
Plastic (packaging materials)	0.000	2.000
Cellulosics Packaging	0.000	0.000

Analysis Esignature History

Esig Approval Id	User Id	Esignature Date	Comment
2684841	CHINKLE	30-JAN-2014 10:33	Batch is promoted. chd 1/30/14
2684471	SOLDHAM	30-JAN-2014 08:14	
2680790	CHINKLE	28-JAN-2014 08:24	This batch is returned for rework. AK does not concur with the recommended IDC change for containers10456533, 10453439, 10368557, 10366291, 10323541 and 10145322. CHD 01/28/14
2679457	DGREEN	24-JAN-2014 18:06	

Batch Id RTR14-00005 **Container Id** 10182410 **Analysis Id** 0000094441

Container Type C drum, 83 Gallon **Analysis Status** Pass

RTR Date 25-JAN-2014 11:46 **Gross Weight** 756.315 Lbs. **Net Weight** 596.315 Lbs.

Equipment Z-213-101 **Waste Matrix Code** S3121 **IDC** RF-007 Building 374 Dry Sludge

Recording Id 1RTR14-00007 **Procedure Id** INST-OI-12 **Revision** 52 **Approval Level** SPM

Is Test Pattern Resolution Ok? Yes **Start Side** A **Replicate** No **OIO** No

Audio Visual Ok? Yes **Operator** MRICKS

Result Comment Overpacked 55 gal drum appears to contain sludge.

Package

IDC Correct Yes **Recommended IDC** **Summary Category** S3000

Idc Change Reason

Rigid Liner Present? Yes **LinerType** TYPE 3

Liner Punctured? Yes **Sharp Objects?** No

Liner Lid Present? Yes **Sharp Objects Are Protected?** Yes

Liner Lid Deformed? No **Layers Of Confinement** 2

Fill Factor 97

Bag Closure Method Twisted and Taped

Liquids

Liquid Present? Yes **Internal Container with Liquid** No

Internal Container with Liquid 0 pints **LA Candidate** No

Liquid Between Liner & Drum 0 pints **Containerized Liquid**

Total Liquid Amount 1.1 pints **Containerized Liquid Amt** 0 pints

Other Liquids 1.1 pints **Comment** estimate 1.1 pints in the waste bottom of drum

Prohibited Liquids Present No **Comment**

Contents-Drum or Box

	Value	Comment		Value	Comment
Lead?	No		**Mercury Present?**	No	
Wet Cell Batteries?	No		**Explosives?**	No	
Prohibited Compressed Gases?	No		**PCBs Present?**	No	
Aerosol Cans?	No		**PCB Mass (lbs)**	0	
Non-Mixed Hazardous Waste Present?	No		**Sealed Containers Over 4L?**	No	

Non-Radionuclide Pyrophoric Materials Present? No

Waste exhibiting the characteristics of Ignitability, Corrosivity or Reactivity Present? No

Wastes Incompatible with backfill, seal and panel closure materials, container and packaging materials,shipping container or other wastes? No

Impenetrable Dense Objects? No

Waste Material Items

Packaging Materials

Material Item	Quantity	Unit	Unit Wt(lbs)	Item Wt(lbs)
90 mil liner	1.000	EACH	16.000	16.000
Drum plastic bag	2.000	EACH	1.000	2.000
55-GAL DRUM (17c)	1.000	EACH	59.000	59.000

Waste Items byWeight

Material Item	Quantity	Unit	Unit Wt(lbs)	Item Wt(lbs)

Waste Items by Volume

Material Item	Quantity	Unit	Unit Wt(lbs)	Item Wt(lbs)
Liquids for Inorganic Matrix	1.100	PINTS	1.000	1.100

Batch Id RTR14-00005 Container Id 10182410 Analysis Id 0000094441

Waste Parameters

Waste Parameter	Remaining Weight %	Actual Weight Lbs
Iron-based Metals/Alloys	0.000	0.000
Aluminum-based Metals/Alloys	0.000	0.000
Other metals	0.000	0.000
Other Inorganic Materials	0.000	0.000
Cellulosics	0.000	0.000
Rubber	0.000	0.000
Plastic (Waste Materials)	0.000	0.000
Inorganic matrix	100.000	596.315
Organic matrix	0.000	0.000
Soils/gravel	0.000	0.000
Steel (packaging materials)	0.000	142.000
Plastic (packaging materials)	0.000	18.000
Cellulosics Packaging	0.000	0.000

Analysis Esignature History

Esig Approval Id	User Id	Esignature Date	Comment
2679572	MRICKS	25-JAN-2014 11:46	

Batch Id RTR14-00005 **Container Id** 10220519 **Analysis Id** 0000094444

Container Type C drum, 83 Gallon **Analysis Status** Pass

RTR Date 25-JAN-2014 12:02 **Gross Weight** 399.105 **Lbs.** **Net Weight** 239.105 **Lbs.**

Equipment Z-213-101 **Waste Matrix Code** S5122 **IDC** RF-440 Glass

Recording Id 1RTR14-00007 **Procedure Id** INST-OI-12 **Revision** 52 **Approval Level** SPM

Is Test Pattern Resolution Ok? Yes **Start Side** A **Replicate** No **OIO** No

Audio Visual Ok? Yes **Operator** MRICKS

Result Comment Overpacked 55 gal drum contains raschig rings in fiberpaks.

Package

IDC Correct Yes **Recommended IDC** **Summary Category** S5000

Idc Change Reason

Rigid Liner Present? Yes **LinerType** TYPE 1

Liner Punctured? No **Sharp Objects?** No

Liner Lid Present? Yes **Sharp Objects Are Protected?** Yes

Liner Lid Deformed? Yes **Layers Of Confinement** 4

Fill Factor 80

Bag Closure Method Twisted and Taped

Liquids

Liquid Present? No **Internal Container with Liquid** No

Internal Container with Liquid 0 pints **LA Candidate** No

Liquid Between Liner & Drum 0 pints **Containerized Liquid**

Total Liquid Amount 0 pints **Containerized Liquid Amt** 0 pints

Other Liquids 0 pints **Comment**

Prohibited Liquids Present No **Comment**

Contents-Drum or Box

	Value	Comment		Value	Comment
Lead?	No		Mercury Present?	No	
Wet Cell Batteries?	No		Explosives?	No	
Prohibited Compressed Gases?	No		PCBs Present?	No	
Aerosol Cans?	No		PCB Mass (lbs)	0	
Non-Mixed Hazardous Waste Present?	No		Sealed Containers Over 4L?	No	

Non-Radionuclide Pyrophoric Materials Present? No

Waste exhibiting the characteristics of Ignitability, Corrosivity or Reactivity Present? No

Wastes Incompatible with backfill, seal and panel closure materials, container and packaging materials,shipping container or other wastes? No

Impenetrable Dense Objects? No

Waste Material Items

Packaging Materials

Material Item	Quantity	Unit	Unit Wt(lbs)	Item Wt(lbs)
90 mil liner	1.000	EACH	16.000	16.000
Drum plastic bag	2.000	EACH	1.000	2.000
55-GAL DRUM (17c)	1.000	EACH	59.000	59.000

Waste Items byWeight

Material Item	Quantity	Unit	Unit Wt(lbs)	Item Wt(lbs)
Fiber pack	2.000	EACH	6.000	12.000
Plastic bag for waste	4.000	EACH	0.250	1.000

Waste Items by Volume

Material Item	Quantity	Unit	Unit Wt(lbs)	Item Wt(lbs)
Oil-Dri (Inside 55 gal drum)	100.000	PINTS	0.420	42.000

Batch Id RTR14-00005 **Container Id** 10220519 **Analysis Id** 0000094444

Waste Parameters

Waste Parameter	Remaining Weight %	Actual Weight Lbs
Iron-based Metals/Alloys	0.000	0.000
Aluminum-based Metals/Alloys	0.000	0.000
Other metals	0.000	0.000
Other Inorganic Materials	100.000	226.105
Cellulosics	0.000	12.000
Rubber	0.000	0.000
Plastic (Waste Materials)	0.000	1.000
Inorganic matrix	0.000	0.000
Organic matrix	0.000	0.000
Soils/gravel	0.000	0.000
Steel (packaging materials)	0.000	142.000
Plastic (packaging materials)	0.000	18.000
Cellulosics Packaging	0.000	0.000

Analysis Esignature History

Esig Approval Id	User Id	Esignature Date	Comment
2679574	MRICKS	25-JAN-2014 12:02	

AMWTP
Advanced Mixed Waste Treatment Project

AMWTP

RTR Analysis Report

Date: 22-Sep-2014
Time: 08:24

Batch Id RTR14-00005 **Container Id** 10034756 **Analysis Id** 0000094446

Container Type C drum, 83 Gallon **Analysis Status** Pass

RTR Date 25-JAN-2014 12:22 **Gross Weight** 566.685 Lbs. **Net Weight** 406.685 Lbs.
Equipment Z-213-101 **Waste Matrix Code** S3121 **IDC** RF-807 Bldg 374 Bypass Sludge (After 3/21/87)
Recording Id 1RTR14-00007 **Procedure Id** INST-OI-12 **Revision** 52 **Approval Level** SPM
Is Test Pattern Resolution Ok? Yes **Start Side** A **Replicate** No **OIO** No
Audio Visual Ok? Yes **Operator** MRICKS

Result Comment Overpacked 55 gal drum appears to contain sludge.

Package

IDC Correct Yes **Recommended IDC** **Summary Category** S3000
Idc Change Reason
Rigid Liner Present? Yes **LinerType** TYPE 3
Liner Punctured? Yes **Sharp Objects?** No
Liner Lid Present? No **Sharp Objects Are Protected?** Yes
Liner Lid Deformed? N/A **Layers Of Confinement** 2
Fill Factor 75
Bag Closure Method Twisted and Taped

Liquids

Liquid Present? No **Internal Container with Liquid** No
Internal Container with Liquid 0 pints **LA Candidate** No
Liquid Between Liner & Drum 0 pints **Containerized Liquid**
Total Liquid Amount 0 pints **Containerized Liquid Amt** 0 pints
Other Liquids 0 pints **Comment**
Prohibited Liquids Present No **Comment**

Contents-Drum or Box

	Value	Comment		Value	Comment
Lead?	No		Mercury Present?	No	
Wet Cell Batteries?	No		Explosives?	No	
Prohibited Compressed Gases?	No		PCBs Present?	No	
Aerosol Cans?	No		PCB Mass (lbs)	0	
Non-Mixed Hazardous Waste Present?	No		Sealed Containers Over 4L?	No	

Non-Radionuclide Pyrophoric Materials Present? No
Waste exhibiting the characteristics of Ignitability, Corrosivity or Reactivity Present? No
Wastes Incompatible with backfill, seal and panel closure materials, container and packaging materials,shipping container or other wastes? No
Impenetrable Dense Objects? No

Waste Material Items

Packaging Materials

Material Item	Quantity	Unit	Unit Wt(lbs)	Item Wt(lbs)
90 mil liner	1.000	EACH	16.000	16.000
Drum plastic bag	2.000	EACH	1.000	2.000
55-GAL DRUM (17c)	1.000	EACH	59.000	59.000

Waste Items byWeight

Material Item	Quantity	Unit	Unit Wt(lbs)	Item Wt(lbs)

Waste Items by Volume

Material Item	Quantity	Unit	Unit Wt(lbs)	Item Wt(lbs)

Batch Id RTR14-00005 Container Id 10034756 Analysis Id 0000094446

Waste Parameters

Waste Parameter	Remaining Weight %	Actual Weight Lbs
Iron-based Metals/Alloys	0.000	0.000
Aluminum-based Metals/Alloys	0.000	0.000
Other metals	0.000	0.000
Other Inorganic Materials	0.000	0.000
Cellulosics	0.000	0.000
Rubber	0.000	0.000
Plastic (Waste Materials)	0.000	0.000
Inorganic matrix	100.000	406.685
Organic matrix	0.000	0.000
Soils/gravel	0.000	0.000
Steel (packaging materials)	0.000	142.000
Plastic (packaging materials)	0.000	18.000
Cellulosics Packaging	0.000	0.000

Analysis Esignature History

Esig Approval Id	User Id	Esignature Date	Comment
2679577	MRICKS	25-JAN-2014 12:22	

Batch Id RTR14-00005 **Container Id** 10220519 **Analysis Id** 0000094448

Container Type C drum, 83 Gallon **Analysis Status** Pass

RTR Date 25-JAN-2014 13:23 **Gross Weight** 399.105 Lbs. **Net Weight** 239.105 Lbs.

Equipment Z-213-101 **Waste Matrix Code** S5122 **IDC** RF-440 Glass

Recording Id 1RTR14-00007 **Procedure Id** INST-OI-12 **Revision** 52 **Approval Level** SPM

Is Test Pattern Resolution Ok? Yes **Start Side** A **Replicate** No **OIO** Yes

Audio Visual Ok? Yes **Operator** JCUMMINGS

Result Comment Contents of this drum is primarily raschig rings.

Package

IDC Correct Yes **Recommended IDC** **Summary Category** S5000

Idc Change Reason

Rigid Liner Present? Yes **LinerType** TYPE 1

Liner Punctured? No **Sharp Objects?** No

Liner Lid Present? Yes **Sharp Objects Are Protected?** Yes

Liner Lid Deformed? No **Layers Of Confinement** 4

Fill Factor 65

Bag Closure Method Twisted and Taped

Liquids

Liquid Present? No **Internal Container with Liquid** No

Internal Container with Liquid 0 pints **LA Candidate** No

Liquid Between Liner & Drum 0 pints **Containerized Liquid**

Total Liquid Amount 0 pints **Containerized Liquid Amt** 0 pints

Other Liquids 0 pints **Comment**

Prohibited Liquids Present No **Comment**

Contents-Drum or Box

	Value	Comment		Value	Comment
Lead?	No		**Mercury Present?**	No	
Wet Cell Batteries?	No		**Explosives?**	No	
Prohibited Compressed Gases?	No		**PCBs Present?**	No	
Aerosol Cans?	No		**PCB Mass (lbs)**	0	
Non-Mixed Hazardous Waste Present?	No		**Sealed Containers Over 4L?**	No	

Non-Radionuclide Pyrophoric Materials Present? No

Waste exhibiting the characteristics of Ignitability, Corrosivity or Reactivity Present? No

Wastes Incompatible with backfill, seal and panel closure materials, container and packaging materials,shipping container or other wastes? No

Impenetrable Dense Objects? No

Waste Material Items

Packaging Materials

Material Item	Quantity	Unit	Unit Wt(lbs)	Item Wt(lbs)
90 mil liner	1.000	EACH	16.000	16.000
Drum plastic bag	2.000	EACH	1.000	2.000
55-GAL DRUM (17c)	1.000	EACH	59.000	59.000

Waste Items byWeight

Material Item	Quantity	Unit	Unit Wt(lbs)	Item Wt(lbs)
Fiber pack	2.000	EACH	6.000	12.000
Plastic bag for waste	4.000	EACH	0.250	1.000

Waste Items by Volume

Material Item	Quantity	Unit	Unit Wt(lbs)	Item Wt(lbs)
Oil-Dri (Inside 55 gal drum)	80.000	PINTS	0.420	33.600

Batch Id RTR14-00005 **Container Id** 10220519 **Analysis Id** 0000094448

Waste Parameters

Waste Parameter	Remaining Weight %	Actual Weight Lbs
Iron-based Metals/Alloys	0.000	0.000
Aluminum-based Metals/Alloys	0.000	0.000
Other metals	0.000	0.000
Other Inorganic Materials	100.000	226.105
Cellulosics	0.000	12.000
Rubber	0.000	0.000
Plastic (Waste Materials)	0.000	1.000
Inorganic matrix	0.000	0.000
Organic matrix	0.000	0.000
Soils/gravel	0.000	0.000
Steel (packaging materials)	0.000	142.000
Plastic (packaging materials)	0.000	18.000
Cellulosics Packaging	0.000	0.000

RTR Independent Observation

Obsolete	Performed	User Name	Checklist	Answer
No	01-FEB-2014 15:18	RBTHOMPSON	1.Was an independent observation performed?	Yes
			2.Were all items on the recording media identified correctly in WTS?	Yes
			3.Do you agree with the operator?	No

Comment

Independent Observation Esignature History

Esig Approval Id	User Id	Esignature Date	Comment
2685868	RBTHOMPSON	01-FEB-2014 15:18	OIO

Analysis Esignature History

Esig Approval Id	User Id	Esignature Date	Comment
2679581	JCUMMINGS	25-JAN-2014 13:23	

Batch Id RTR14-00005 **Container Id** 10034756 **Analysis Id** 0000094450

Container Type C drum, 83 Gallon **Analysis Status** Pass

RTR Date 25-JAN-2014 13:47 **Gross Weight** 566.685 Lbs. **Net Weight** 403.685 Lbs.

Equipment Z-213-101 **Waste Matrix Code** S3121 **IDC** RF-807 Bldg 374 Bypass Sludge (After 3/21/87)

Recording Id 1RTR14-00007 **Procedure Id** INST-OI-12 **Revision** 52 **Approval Level** SPM

Is Test Pattern Resolution Ok? Yes **Start Side** A **Replicate** Yes **OIO** No

Audio Visual Ok? Yes **Operator** JCUMMINGS

Result Comment Contents of this drum is primarily sludge.

Package

IDC Correct Yes **Recommended IDC** **Summary Category** S3000

Idc Change Reason

Rigid Liner Present? Yes **LinerType** TYPE 3

Liner Punctured? Yes **Sharp Objects?** No

Liner Lid Present? Yes **Sharp Objects Are Protected?** Yes

Liner Lid Deformed? No **Layers Of Confinement** 2

Fill Factor 75

Bag Closure Method Twisted and Taped

Liquids

Liquid Present? No **Internal Container with Liquid** No

Internal Container with Liquid 0 pints **LA Candidate** No

Liquid Between Liner & Drum 0 pints **Containerized Liquid**

Total Liquid Amount 0 pints **Containerized Liquid Amt** 0 pints

Other Liquids 0 pints **Comment**

Prohibited Liquids Present No **Comment**

Contents-Drum or Box

	Value	Comment		Value	Comment
Lead?	No		Mercury Present?	No	
Wet Cell Batteries?	No		Explosives?	No	
Prohibited Compressed Gases?	No		PCBs Present?	No	
Aerosol Cans?	No		PCB Mass (lbs)	0	
Non-Mixed Hazardous Waste Present?	No		Sealed Containers Over 4L?	No	

Non-Radionuclide Pyrophoric Materials Present? No

Waste exhibiting the characteristics of Ignitability, Corrosivity or Reactivity Present? No

Wastes Incompatible with backfill, seal and panel closure materials, container and packaging materials,shipping container or other wastes? No

Impenetrable Dense Objects? No

Waste Material Items

Packaging Materials

Material Item	Quantity	Unit	Unit Wt(lbs)	Item Wt(lbs)
90 mil liner	1.000	EACH	16.000	16.000
Drum plastic bag	1.000	EACH	1.000	1.000
O-ring plastic bag	1.000	EACH	4.000	4.000
55-GAL DRUM (17c)	1.000	EACH	59.000	59.000

Waste Items byWeight

Material Item	Quantity	Unit	Unit Wt(lbs)	Item Wt(lbs)

Waste Items by Volume

Material Item	Quantity	Unit	Unit Wt(lbs)	Item Wt(lbs)

Batch Id RTR14-00005 **Container Id** 10034756 **Analysis Id** 0000094450

Waste Parameters

Waste Parameter	Remaining Weight %	Actual Weight Lbs
Iron-based Metals/Alloys	0.000	0.000
Aluminum-based Metals/Alloys	0.000	0.000
Other metals	0.000	0.000
Other Inorganic Materials	0.000	0.000
Cellulosics	0.000	0.000
Rubber	0.000	0.000
Plastic (Waste Materials)	0.000	0.000
Inorganic matrix	100.000	403.685
Organic matrix	0.000	0.000
Soils/gravel	0.000	0.000
Steel (packaging materials)	0.000	142.000
Plastic (packaging materials)	0.000	21.000
Cellulosics Packaging	0.000	0.000

Analysis Esignature History

Esig Approval Id	User Id	Esignature Date	Comment
2679583	JCUMMINGS	25-JAN-2014 13:47	

Batch Id RTR14-00005 **Container Id** 10336333 **Analysis Id** 0000094451

Container Type C drum, 83 Gallon **Analysis Status** Pass

RTR Date 25-JAN-2014 14:18 **Gross Weight** 518.175 Lbs. **Net Weight** 375.175 Lbs.

Equipment Z-213-101 **Waste Matrix Code** S3114 **IDC** RF-743 Pits 11 & 12 Organic Setups

Recording Id 1RTR14-00007 **Procedure Id** INST-OI-12 **Revision** 52 **Approval Level** SPM

Is Test Pattern Resolution Ok? Yes **Start Side** A **Replicate** No **OIO** No

Audio Visual Ok? Yes **Operator** JCUMMINGS

Result Comment Contents of this drum is primarily sludge.

Package

IDC Correct Yes **Recommended IDC** **Summary Category** S3000

Idc Change Reason

Rigid Liner Present? No **LinerType** NO LINER

Liner Punctured? N/A **Sharp Objects?** No

Liner Lid Present? No **Sharp Objects Are Protected?** Yes

Liner Lid Deformed? N/A **Layers Of Confinement** 1

Fill Factor 90

Bag Closure Method Twisted and Taped

Liquids

Liquid Present? Yes **Internal Container with Liquid** No

Internal Container with Liquid 0 pints **LA Candidate** No

Liquid Between Liner & Drum 0 pints **Containerized Liquid**

Containerized Liquid Amt 0 pints

Total Liquid Amount 20.25 pints

Other Liquids 20.25 pint **Comment** .25 pints in bagging at the bottom of the drum. 20 pints in bagging.

Prohibited Liquids Present Yes **Comment** > 1% by volume

Contents-Drum or Box

	Value	Comment		Value	Comment
Lead?	No		Mercury Present?	No	
Wet Cell Batteries?	No		Explosives?	No	
Prohibited Compressed Gases?	No		PCBs Present?	Yes - Prohibited	PCB liquid
Aerosol Cans?	No		PCB Mass (lbs)	375.18	
Non-Mixed Hazardous Waste Present?	No		Sealed Containers Over 4L?	No	

Non-Radionuclide Pyrophoric Materials Present? No

Waste exhibiting the characteristics of Ignitability, Corrosivity or Reactivity Present? No

Wastes Incompatible with backfill, seal and panel closure materials, container and packaging materials,shipping container or other wastes? No

Impenetrable Dense Objects? No

Waste Material Items

Packaging Materials

Material Item	Quantity	Unit	Unit Wt(lbs)	Item Wt(lbs)
Drum plastic bag	1.000	EACH	1.000	1.000
55-GAL DRUM (17c)	1.000	EACH	59.000	59.000

Waste Items byWeight

Material Item	Quantity	Unit	Unit Wt(lbs)	Item Wt(lbs)

Waste Items by Volume

Material Item	Quantity	Unit	Unit Wt(lbs)	Item Wt(lbs)
Liquids for Organic Matrix	20.250	PINTS	1.000	20.250

Batch Id RTR14-00005 **Container Id** 10336333 **Analysis Id** 0000094451

Waste Parameters

Waste Parameter	Remaining Weight %	Actual Weight Lbs
Iron-based Metals/Alloys	0.000	0.000
Aluminum-based Metals/Alloys	0.000	0.000
Other metals	0.000	0.000
Other Inorganic Materials	0.000	0.000
Cellulosics	0.000	0.000
Rubber	0.000	0.000
Plastic (Waste Materials)	0.000	0.000
Inorganic matrix	0.000	0.000
Organic matrix	100.000	375.175
Soils/gravel	0.000	0.000
Steel (packaging materials)	0.000	142.000
Plastic (packaging materials)	0.000	1.000
Cellulosics Packaging	0.000	0.000

Analysis Esignature History

Esig Approval Id	User Id	Esignature Date	Comment
2679586	JCUMMINGS	25-JAN-2014 14:18	

Batch Id RTR14-00005 **Container Id** 10368557 **Analysis Id** 0000094453

Container Type A drum, 55 Gallon Drum (17H) **Analysis Status** Pass

RTR Date 25-JAN-2014 15:10 **Gross Weight** 123.480 Lbs. **Net Weight** 63.480 Lbs

Equipment Z-213-101 **Waste Matrix Code** S5490 **IDC** BN-524 Pad 1 Cells 1 and 2 Non-PCB Debris

Recording Id 1RTR14-00007 **Procedure Id** INST-OI-12 **Revision** 52 **Approval Level** SPM

Is Test Pattern Resolution Ok? Yes **Start Side** A **Replicate** No **OIO** No

Audio Visual Ok? Yes **Operator** JCUMMINGS

Result Comment Contents of this drum is primarily plastic labware as bottles, tubing and bagging.
AK does not concur with the recommended IDC change from UN-000 to UN-00B for container 10368557 because waste is debris with insufficient AK information to assign a legacy IDC. Instead, AK recommends an IDC of BN-524. CHD 01/28/14
Rework to change IDC per AK. ESO 01/30/14
AK concurs with the recommended IDC, BN-524, for container 10368557. No AKR or NCR is necessary. CHD 01/30/14
(rework) Updated liquid comment field. KH 03FEB14

Package

IDC Correct Yes **Recommended IDC** BN-524 **Summary Category** S5000

Idc Change Reason Per AK

Rigid Liner Present? No **LinerType** NO LINER

Liner Punctured? N/A **Sharp Objects?** No

Liner Lid Present? No **Sharp Objects Are Protected?** Yes

Liner Lid Deformed? N/A **Layers Of Confinement** 2

Fill Factor 80

Bag Closure Method Twisted and Taped

Liquids

Liquid Present? Yes **Internal Container with Liquid** No

Internal Container with Liquid 0 pints **LA Candidate** No

Liquid Between Liner & Drum 0 pints **Containerized Liquid**

Total Liquid Amount .28 pints **Containerized Liquid Amt** 0 pints

Other Liquids .28 pints **Comment** .28 pints in the bagging throughout the waste

Prohibited Liquids Present No **Comment**

Contents-Drum or Box

	Value	Comment		Value	Comment
Lead?	No		Mercury Present?	No	
Wet Cell Batteries?	No		Explosives?	No	
Prohibited Compressed Gases?	No		PCBs Present?	No	
Aerosol Cans?	No		PCB Mass (lbs)	0	
Non-Mixed Hazardous Waste Present?	No		Sealed Containers Over 4L?	No	

Non-Radionuclide Pyrophoric Materials Present? No

Waste exhibiting the characteristics of Ignitability, Corrosivity or Reactivity Present? No

Wastes Incompatible with backfill, seal and panel closure materials, container and packaging materials,shipping container or other wastes? No

Impenetrable Dense Objects? No

Waste Material Items

Packaging Materials

Material Item	Quantity	Unit	Unit Wt(lbs)	Item Wt(lbs)
Drum plastic bag	1.000	EACH	1.000	1.000

Waste Items byWeight

Material Item	Quantity	Unit	Unit Wt(lbs)	Item Wt(lbs)
misc. metal	1.000	EACH	2.000	2.000
Plastic bag for waste	1.000	EACH	0.250	0.250

Batch Id RTR14-00005 **Container Id** 10368557 **Analysis Id** 0000094453

Waste Items by Volume

Material Item	Quantity	Unit	Unit Wt(lbs)	Item Wt(lbs)
Oil-Dri (Inside 55 gal drum)	8.000	PINTS	0.420	3.360
Liquids for Other Inorganics	0.280	PINTS	1.000	0.280

Waste Parameters

Waste Parameter	Remaining Weight %	Actual Weight Lbs
Iron-based Metals/Alloys	0.000	2.000
Aluminum-based Metals/Alloys	0.000	0.000
Other metals	0.000	0.000
Other Inorganic Materials	0.000	3.640
Cellulosics	0.000	0.000
Rubber	0.000	0.000
Plastic (Waste Materials)	100.000	57.840
Inorganic matrix	0.000	0.000
Organic matrix	0.000	0.000
Soils/gravel	0.000	0.000
Steel (packaging materials)	0.000	59.000
Plastic (packaging materials)	0.000	1.000
Cellulosics Packaging	0.000	0.000

Analysis Esignature History

Esig Approval Id	User Id	Esignature Date	Comment
2686082	KHUGHES	03-FEB-2014 07:19	
2684839	CHINKLE	30-JAN-2014 10:33	Batch is promoted. chd 1/30/14
2684475	SOLDHAM	30-JAN-2014 08:17	
2680788	CHINKLE	28-JAN-2014 08:24	This batch is returned for rework. AK does not concur with the recommended IDC change for containers10456533, 10453439, 10368557, 10366291, 10323541 and 10145322. CHD 01/28/14
2679602	JCUMMINGS	25-JAN-2014 15:10	

Batch Id RTR14-00005 **Container Id** 10054382 **Analysis Id** 0000094455

Container Type A drum, 55 Gallon Drum (17H) **Analysis Status** Pass

RTR Date 25-JAN-2014 15:26 **Gross Weight** 196.245 Lbs. **Net Weight** 120.245 Lbs.

Equipment Z-213-101 **Waste Matrix Code** S3111 **IDC** RF-421 Ash Heels

Recording Id 1RTR14-00007 **Procedure Id** INST-OI-12 **Revision** 52 **Approval Level** SPM

Is Test Pattern Resolution Ok? Yes **Start Side** A **Replicate** No **OIO** No

Audio Visual Ok? Yes **Operator** JCUMMINGS

Result Comment Contents of this drum is primarily ash heels in poly bottles.

Package

IDC Correct Yes **Recommended IDC** **Summary Category** S3000

Idc Change Reason

Rigid Liner Present? Yes **LinerType** TYPE 1

Liner Punctured? Yes **Sharp Objects?** No

Liner Lid Present? Yes **Sharp Objects Are Protected?** Yes

Liner Lid Deformed? No **Layers Of Confinement** 2

Fill Factor 65

Bag Closure Method Twisted and Taped

Liquids

Liquid Present? No **Internal Container with Liquid** No

Internal Container with Liquid 0 pints **LA Candidate** No

Liquid Between Liner & Drum 0 pints **Containerized Liquid**

Containerized Liquid Amt 0 pints

Total Liquid Amount 0 pints

Other Liquids 0 pints **Comment**

Prohibited Liquids Present No **Comment**

Contents-Drum or Box

	Value	Comment		Value	Comment
Lead?	No		Mercury Present?	No	
Wet Cell Batteries?	No		Explosives?	No	
Prohibited Compressed Gases?	No		PCBs Present?	No	
Aerosol Cans?	No		PCB Mass (lbs)	0	
Non-Mixed Hazardous Waste Present?	No		Sealed Containers Over 4L?	No	

Non-Radionuclide Pyrophoric Materials Present? No

Waste exhibiting the characteristics of Ignitability, Corrosivity or Reactivity Present? No

Wastes Incompatible with backfill, seal and panel closure materials, container and packaging materials,shipping container or other wastes? No

Impenetrable Dense Objects? No

Waste Material Items

Packaging Materials

Material Item	Quantity	Unit	Unit Wt(lbs)	Item Wt(lbs)
90 mil liner	1.000	EACH	16.000	16.000
Drum plastic bag	1.000	EACH	1.000	1.000

Waste Items byWeight

Material Item	Quantity	Unit	Unit Wt(lbs)	Item Wt(lbs)
poly bottles	1.000	EACH	10.000	10.000
Plastic bag for waste	1.000	EACH	0.250	0.250

Waste Items by Volume

Material Item	Quantity	Unit	Unit Wt(lbs)	Item Wt(lbs)
Vermiculite (95 gm/liter) .125 lb/pint	2.000	PINTS	0.125	0.250

Batch Id RTR14-00005 **Container Id** 10054382 **Analysis Id** 0000094455

Waste Parameters

Waste Parameter	Remaining Weight %	Actual Weight Lbs
Iron-based Metals/Alloys	0.000	0.000
Aluminum-based Metals/Alloys	0.000	0.000
Other metals	0.000	0.000
Other Inorganic Materials	100.000	109.995
Cellulosics	0.000	0.000
Rubber	0.000	0.000
Plastic (Waste Materials)	0.000	10.250
Inorganic matrix	0.000	0.000
Organic matrix	0.000	0.000
Soils/gravel	0.000	0.000
Steel (packaging materials)	0.000	59.000
Plastic (packaging materials)	0.000	17.000
Cellulosics Packaging	0.000	0.000

Analysis Esignature History

Esig Approval Id	User Id	Esignature Date	Comment
2679607	JCUMMINGS	25-JAN-2014 15:26	

Batch Id RTR14-00005 **Container Id** 10366291 **Analysis Id** 0000094456

Container Type A drum, 55 Gallon Drum (17H) **Analysis Status** Pass

RTR Date 25-JAN-2014 15:44 **Gross Weight** 160.965 **Lbs.** **Net Weight** 99.965 **Lbs**

Equipment Z-213-101 **Waste Matrix Code** S5490 **IDC** RF-760 RFP Debris

Recording Id 1RTR14-00007 **Procedure Id** INST-OI-12 **Revision** 52 **Approval Level** SPM

Is Test Pattern Resolution Ok? Yes **Start Side** A **Replicate** No **OIO** No

Audio Visual Ok? Yes **Operator** JCUMMINGS

Result Comment Contents of this drum is primarily plastic sheeting and bagging.
AK does not concur with the recommended IDC change from UN-000 to UN-00B for container 10366291 because waste is debris retrieved from Pad 1, cells 1 and 2. Instead, AK recommends an IDC of RF-760. CHD 01/28/14
Rework to change IDC per AK. ESO 01/30/14
AK concurs with the recommended IDC, RF-760, for container 10366291. No AKR or NCR is necessary. CHD 01/30/14

Package

IDC Correct Yes **Recommended IDC** RF-760 **Summary Category** S5000

Idc Change Reason Per AK

Rigid Liner Present? No **LinerType** NO LINER

Liner Punctured? N/A **Sharp Objects?** No

Liner Lid Present? No **Sharp Objects Are Protected?** Yes

Liner Lid Deformed? N/A **Layers Of Confinement** 2

Fill Factor 95

Bag Closure Method Twisted and Taped

Liquids

Liquid Present? No **Internal Container with Liquid** No

Internal Container with Liquid 0 pints **LA Candidate** No

Liquid Between Liner & Drum 0 pints **Containerized Liquid**

Containerized Liquid Amt 0 pints

Total Liquid Amount 0 pints

Other Liquids 0 pints **Comment**

Prohibited Liquids Present No **Comment**

Contents-Drum or Box

	Value	Comment		Value	Comment
Lead?	No		**Mercury Present?**	No	
Wet Cell Batteries?	No		**Explosives?**	No	
Prohibited Compressed Gases?	No		**PCBs Present?**	No	
Aerosol Cans?	No		**PCB Mass (lbs)**	0	
Non-Mixed Hazardous Waste Present?	No		**Sealed Containers Over 4L?**	No	

Non-Radionuclide Pyrophoric Materials Present? No

Waste exhibiting the characteristics of Ignitability, Corrosivity or Reactivity Present? No

Wastes Incompatible with backfill, seal and panel closure materials, container and packaging materials,shipping container or other wastes? No

Impenetrable Dense Objects? No

Waste Material Items

Packaging Materials

Material Item	Quantity	Unit	Unit Wt(lbs)	Item Wt(lbs)
Drum plastic bag	2.000	EACH	1.000	2.000

Waste Items byWeight

Material Item	Quantity	Unit	Unit Wt(lbs)	Item Wt(lbs)
cardboard	1.000	EACH	2.000	2.000
misc. metal	1.000	EACH	4.000	4.000
Cardboard liner	1.000	EACH	4.000	4.000

Waste Items by Volume

Material Item	Quantity	Unit	Unit Wt(lbs)	Item Wt(lbs)
Vermiculite (95 gm/liter) .125 lb/pint	2.000	PINTS	0.125	0.250

Batch Id RTR14-00005 **Container Id** 10366291 **Analysis Id** 0000094456

Waste Parameters

Waste Parameter	Remaining Weight %	Actual Weight Lbs
Iron-based Metals/Alloys	0.000	4.000
Aluminum-based Metals/Alloys	0.000	0.000
Other metals	0.000	0.000
Other Inorganic Materials	0.000	0.250
Cellulosics	0.000	6.000
Rubber	0.000	0.000
Plastic (Waste Materials)	100.000	89.715
Inorganic matrix	0.000	0.000
Organic matrix	0.000	0.000
Soils/gravel	0.000	0.000
Steel (packaging materials)	0.000	59.000
Plastic (packaging materials)	0.000	2.000
Cellulosics Packaging	0.000	0.000

Analysis Esignature History

Esig Approval Id	User Id	Esignature Date	Comment
2684840	CHINKLE	30-JAN-2014 10:33	Batch is promoted. chd 1/30/14
2684474	SOLDHAM	30-JAN-2014 08:15	
2680789	CHINKLE	28-JAN-2014 08:24	This batch is returned for rework. AK does not concur with the recommended IDC change for containers10456533, 10453439, 10368557, 10366291, 10323541 and 10145322. CHD 01/28/14
2679615	JCUMMINGS	25-JAN-2014 15:44	

Batch Id RTR14-00005 **Container Id** 10453439 **Analysis Id** 0000094459

Container Type A drum, 55 Gallon Drum (17H) **Analysis Status** Pass

RTR Date 25-JAN-2014 16:30 **Gross Weight** 141.120 Lbs. **Net Weight** 80.120 Lbs

Equipment Z-213-101 **Waste Matrix Code** S5490 **IDC** RF-760 RFP Debris

Recording Id IRTR14-00007 **Procedure Id** INST-OI-12 **Revision** 52 **Approval Level** SPM

Is Test Pattern Resolution Ok? Yes **Start Side** A **Replicate** No **OIO** No

Audio Visual Ok? Yes **Operator** JCUMMINGS

Result Comment Contents of this drum is primarily plastic sheeting and bagging.
AK does not concur with the recommended IDC change from UN-000 to UN-00B for container 10453439 because waste is debris retrieved from Pad 1, cells 1 and 2. Instead, AK recommends an IDC of RF-760. CHD 01/28/14
Rework to change IDC per AK. ESO 01/30/14
AK concurs with the recommended IDC, RF-760, for container 10453439. No AKR or NCR is necessary. CHD 01/30/14
(rework) Changed Drum bag field to 2 and plastic bag for waste field to 2. KH 03FEB14

Package

IDC Correct Yes **Recommended IDC** RF-760 **Summary Category** S5000

Idc Change Reason Per AK

Rigid Liner Present? No **LinerType** NO LINER

Liner Punctured? N/A **Sharp Objects?** No

Liner Lid Present? No **Sharp Objects Are Protected?** Yes

Liner Lid Deformed? N/A **Layers Of Confinement** 4

Fill Factor 95

Bag Closure Method Twisted and Taped

Liquids

Liquid Present? No **Internal Container with Liquid** No

Internal Container with Liquid 0 pints **LA Candidate** No

Liquid Between Liner & Drum 0 pints **Containerized Liquid**

Total Liquid Amount 0 pints **Containerized Liquid Amt** 0 pints

Other Liquids 0 pints **Comment**

Prohibited Liquids Present No **Comment**

Contents-Drum or Box

	Value	Comment		Value	Comment
Lead?	No		**Mercury Present?**	No	
Wet Cell Batteries?	No		**Explosives?**	No	
Prohibited Compressed Gases?	No		**PCBs Present?**	No	
Aerosol Cans?	No		**PCB Mass (lbs)**	0	
Non-Mixed Hazardous Waste Present?	No		**Sealed Containers Over 4L?**	No	

Non-Radionuclide Pyrophoric Materials Present? No

Waste exhibiting the characteristics of Ignitability, Corrosivity or Reactivity Present? No

Wastes Incompatible with backfill, seal and panel closure materials, container and packaging materials,shipping container or other wastes? No

Impenetrable Dense Objects? No

Waste Material Items

Packaging Materials

Material Item	Quantity	Unit	Unit Wt(lbs)	Item Wt(lbs)
Drum plastic bag	2.000	EACH	1.000	2.000

Waste Items byWeight

Material Item	Quantity	Unit	Unit Wt(lbs)	Item Wt(lbs)
Cardboard liner	1.000	EACH	4.000	4.000
Plastic bag for waste	2.000	EACH	0.250	0.500

Waste Items by Volume

Material Item	Quantity	Unit	Unit Wt(lbs)	Item Wt(lbs)

Batch Id RTR14-00005 **Container Id** 10453439 **Analysis Id** 0000094459

Waste Parameters

Waste Parameter	Remaining Weight %	Actual Weight Lbs
Iron-based Metals/Alloys	0.000	0.000
Aluminum-based Metals/Alloys	0.000	0.000
Other metals	0.000	0.000
Other Inorganic Materials	0.000	0.000
Cellulosics	0.000	4.000
Rubber	0.000	0.000
Plastic (Waste Materials)	100.000	76.120
Inorganic matrix	0.000	0.000
Organic matrix	0.000	0.000
Soils/gravel	0.000	0.000
Steel (packaging materials)	0.000	59.000
Plastic (packaging materials)	0.000	2.000
Cellulosics Packaging	0.000	0.000

Analysis Esignature History

Esig Approval Id	User Id	Esignature Date	Comment
2686089	KHUGHES	03-FEB-2014 07:24	
2684838	CHINKLE	30-JAN-2014 10:33	Batch is promoted. chd 1/30/14
2684476	SOLDHAM	30-JAN-2014 08:18	
2680786	CHINKLE	28-JAN-2014 08:24	This batch is returned for rework. AK does not concur with the recommended IDC change for containers10456533, 10453439, 10368557, 10366291, 10323541 and 10145322. CHD 01/28/14
2679622	JCUMMINGS	25-JAN-2014 16:31	

Batch Id RTR14-00005 **Container Id** 10456533 **Analysis Id** 0000094460

Container Type A drum, 55 Gallon Drum (17H) **Analysis Status** Pass

RTR Date 25-JAN-2014 16:58 **Gross Weight** 617.400 Lbs. **Net Weight** 556.400 Lbs.

Equipment Z-213-101 **Waste Matrix Code** S5490 **IDC** RF-760 RFP Debris

Recording Id 1RTR14-00007 **Procedure Id** INST-OI-12 **Revision** 52 **Approval Level** SPM

Is Test Pattern Resolution Ok? Yes **Start Side** A **Replicate** No **OIO** No

Audio Visual Ok? Yes **Operator** JCUMMINGS

Result Comment Contents of this drum is primarily construction rubble.
AK does not concur with the recommended IDC change from UN-000 to UN-00C for container 10456533 because waste is debris retrieved from Pad 1, cells 1 and 2. Instead, AK recommends an IDC of RF-760. CHD 01/28/14
Rework to change IDC per AK. ESO 01/30/14
AK concurs with the recommended IDC, RF-760, for container 10456533. No AKR or NCR is necessary. CHD 01/30/14

Package

IDC Correct Yes **Recommended IDC** RF-760 **Summary Category** S5000

Idc Change Reason Per AK

Rigid Liner Present? No **LinerType** NO LINER

Liner Punctured? N/A **Sharp Objects?** No

Liner Lid Present? No **Sharp Objects Are Protected?** Yes

Liner Lid Deformed? N/A **Layers Of Confinement** 2

Fill Factor 90

Bag Closure Method Twisted and Taped

Liquids

Liquid Present? No **Internal Container with Liquid** No

Internal Container with Liquid 0 pints **LA Candidate** No

Liquid Between Liner & Drum 0 pints **Containerized Liquid**

Total Liquid Amount 0 pints **Containerized Liquid Amt** 0 pints

Other Liquids 0 pints **Comment**

Prohibited Liquids Present No **Comment**

Contents-Drum or Box

	Value	Comment		Value	Comment
Lead?	No		Mercury Present?	No	
Wet Cell Batteries?	No		Explosives?	No	
Prohibited Compressed Gases?	No		PCBs Present?	No	
Aerosol Cans?	No		PCB Mass (lbs)	0	
Non-Mixed Hazardous Waste Present?	No		Sealed Containers Over 4L?	No	

Non-Radionuclide Pyrophoric Materials Present? No

Waste exhibiting the characteristics of Ignitability, Corrosivity or Reactivity Present? No

Wastes Incompatible with backfill, seal and panel closure materials, container and packaging materials,shipping container or other wastes? No

Impenetrable Dense Objects? No

Waste Material Items

Packaging Materials

Material Item	Quantity	Unit	Unit Wt(lbs)	Item Wt(lbs)
Drum plastic bag	2.000	EACH	1.000	2.000

Waste Items byWeight

Material Item	Quantity	Unit	Unit Wt(lbs)	Item Wt(lbs)
Cardboard liner	1.000	EACH	4.000	4.000

Waste Items by Volume

Material Item	Quantity	Unit	Unit Wt(lbs)	Item Wt(lbs)
Oil-Dri (Inside 55 gal drum)	2.000	PINTS	0.420	0.840

AMWTP
Advanced Mixed Waste Treatment Project

AMWTP

RTR Analysis Report

Date: 22-Sep-2014
Time: 08:24

Batch Id RTR14-00005 **Container Id** 10456533 **Analysis Id** 0000094460

Waste Parameters

Waste Parameter	Remaining Weight %	Actual Weight Lbs
Iron-based Metals/Alloys	0.000	0.000
Aluminum-based Metals/Alloys	0.000	0.000
Other metals	0.000	0.000
Other Inorganic Materials	100.000	552.400
Cellulosics	0.000	4.000
Rubber	0.000	0.000
Plastic (Waste Materials)	0.000	0.000
Inorganic matrix	0.000	0.000
Organic matrix	0.000	0.000
Soils/gravel	0.000	0.000
Steel (packaging materials)	0.000	59.000
Plastic (packaging materials)	0.000	2.000
Cellulosics Packaging	0.000	0.000

Analysis Esignature History

Esig Approval Id	User Id	Esignature Date	Comment
2684837	CHINKLE	30-JAN-2014 10:33	Batch is promoted. chd 1/30/14
2684478	SOLDHAM	30-JAN-2014 08:19	
2680785	CHINKLE	28-JAN-2014 08:24	This batch is returned for rework. AK does not concur with the recommended IDC change for containers10456533, 10453439, 10368557, 10366291, 10323541 and 10145322. CHD 01/28/14
2679627	JCUMMINGS	25-JAN-2014 16:58	

End of RTR Analysis Report

AMWTP

Advanced Mixed Waste Treatment Project

AMWTP

RTR Replicate Comparison Report

Date: 22-Sep-2014

Time: 08:26

RTR Batch Id: RTR14-00005 Container Id: 10034756 Equipment Id: Z-213-101

Container type Description: drum, 83 Gallon Gen-IDC: RF-807 Gross Weight(Lbs): 566.685

	Original Analysis		Replicate Analysis	
Analysis Id / Date:	0000094446	25-JAN-2014 12:22	0000094450	25-JAN-2014 13:47
Procedure /Revision:	INST-OI-12	52	INST-OI-12	52
Recording Media Id:	1RTR14-00007		1RTR14-00007	
Starting Position:	A		A	
Is Test Pattern Resolution Ok?	Y		Y	
Audio Visual Ok?	Y		Y	
Personnel Name:	MICHAEL RICKS		JOHN CUMMINGS	
IDC Ok? / Recommended IDC:	Y		Y	
IDC Change Reason:				
Summary Category / Waste matrix Code:	S3000	S3121	S3000	S3121
Packaging				
Rigid Liner Present?	Y		Y	
Liner Type Code:	TYPE 3		TYPE 3	
Liner Punctured:	Y		Y	
Liner Lid Deformed:	NA		N	
Layers Of Confinement:	2		2	
Sharp Objects?	N		N	
Sharp Objects Protected?	Y		Y	
Fill Factor(%):	75		75	
Bag Closure Method:	Twisted and Taped		Twisted and Taped	
Liner Lid Present?:	N		Y	
Liquids: (Volume in Pints)				
Liquid Present?	N		N	
Internal Container with Liquid?	0		0	
Containerized Liquid	N		N	
Other Liquids:	0		0	
Internal Container with Liquid Amt:	0		0	
Liquid Between Liner and Drum:	0		0	
Containerized Liquid:	0		0	
Total Liquid Amount:	0		0	
LA Candidate?	N		N	
Prohibited Liquids Present	N		N	

Contents:	Y/N	Comments	Y/N	Comments
Sealed Containers over 4L?	N		N	
Lead Present?	N		N	
Explosives Present?	N		N	
Mercury Present?	N		N	
Wet Cell Batteries Detected?	N		N	

RTR Replicate Comparison Report

Time: 08:26

RTR Batch Id: RTR14-00005 Container Id: 10034756 Equipment Id: Z-213-101

	Original Analysis	Replicate Analysis
Prohibited Compressed Gas Present?	N	N
PCBs Present?	N	N
PCB Mass (lbs)	0	0
Non-Radionuclide Pyrophoric Materials Present?	N	N
Waste exhibiting the characteristics of ignitability, Corrosivity or reactivity Present?	N	N
Non-Mixed Hazardous Waste Present?	N	N
Waste Incompatibles with backfill, Seal and panel closure materials, container and packaging material, shipping container or other wastes?	N	N
Impenetrable Dense Objects?	N	N
Result Comment:	Overpacked 55 gal drum appears to contain sludge.	Contents of this drum is primarily sludge.

----------E-signature----------

Esig Approval ID	User ID	Signature Date	Comment
2685866	RBTHOMPSON	01-FEB-14	

-----End of RTR Replicate Comparison Report-----

AMWTP

Advanced Mixed Waste Treatment Project

AMWTP

RTR OIO Comparison Report

Date: 22-Sep-2014

Time: 08:27

RTR Batch Id: RTR14-00005 Container Id: 10220519 Equipment Id: Z-213-101

Container type Description: drum, 83 Gallon Gen-IDC: RF-440 Gross Weight(Lbs): 399.105

	Original Analysis		OIO Analysis	
Analysis Id / Date:	0000094444	25-JAN-2014 12:02	0000094448	25-JAN-2014 13:23
Procedure /Revision:	INST-OI-12	52	INST-OI-12	52
Recording Media Id:	1RTR14-00007		1RTR14-00007	
Starting Position:	A		A	
Is Test Pattern Resolution Ok?	Y		Y	
Audio Visual Ok?	Y		Y	
Personnel Name:	MICHAEL RICKS		JOHN CUMMINGS	
IDC Ok? / Recommended IDC:	Y		Y	
IDC Change Reason:				
Summary Category / Waste matrix Code:	S5000	S5122	S5000	S5122
Packaging				
Rigid Liner Present?	Y		Y	
Liner Type Code:	TYPE 1		TYPE 1	
Liner Punctured:	N		N	
Liner Lid Deformed:	Y		N	
Layers Of Confinement:	4		4	
Sharp Objects?	N		N	
Sharp Objects Protected?	Y		Y	
Fill Factor(%):	80		65	
Bag Closure Method:	Twisted and Taped		Twisted and Taped	
Liner Lid Present?:	Y		Y	
Liquids: (Volume in Pints)				
Liquid Present?	N		N	
Internal Container with Liquid?	0		0	
Containerized Liquid	N		N	
Other Liquids:	0		0	
Internal Container with Liquid Amt:	0		0	
Liquid Between Liner and Drum:	0		0	
Containerized Liquid:	0		0	
Total Liquid Amount:	0		0	
LA Candidate?	N		N	
Prohibited Liquids Present	N		N	

Contents:	Y/N	Comments	Y/N	Comments
Sealed Containers over 4L?	N		N	
Lead Present?	N		N	
Explosives Present?	N		N	
Mercury Present?	N		N	
Wet Cell Batteries Detected?	N		N	

AMWTP

Advanced Mixed Waste Treatment Project

AMWTP

RTR OIO Comparison Report

Date: 22-Sep-2014

Time: 08:27

RTR Batch Id: RTR14-00005 **Container Id:** 10220519 **Equipment Id:** Z-213-101

	Original Analysis	OIO Analysis
Prohibited Compressed Gas Present?	N	N
PCBs Present?	N	N
PCB Mass (lbs)	0	0
Non-Radionuclide Pyrophoric Materials Present?	N	N
Waste exhibiting the characteristics of ignitability, Corrosivity or reactivity Present?	N	N
Non-Mixed Hazardous Waste Present?	N	N
Waste Incompatibles with backfill, Seal and panel closure materials, container and packaging material, shipping container or other wastes?	N	N
Impenetrable Dense Objects?	N	N
Result Comment:	Overpacked 55 gal drum contains raschig rings in fiberpaks.	Contents of this drum is primarily raschig rings.

----------E-signature----------

Esig Approval ID	User ID	Signature Date	Comment

-----End of RTR OIO Comparison Report-----

AMWTP
Advanced Mixed Waste Treatment Project

AMWTP

Batch Report Coversheet

AK24

Date: 22-Sep-2014

Time: 08:39

Batch Type Real Time Radiography **Batch Report No.** RTR14-00006

Batch Id RTR14-00006 **Open Date** 25-JAN-14 14:34:08 **Close Date** 26-JAN-14 17:59:12

Batch Status AP

Test Facility Idaho AMWTP

Equipment Id Z-213-106 RTR Station Right (213-106)

Container Id	IDC	Analysis Id	Date Examined	QC Type	Analysis Status	Operator
10123450	RF-337	0000094452	25-JAN-14 14:34:08	Original	P	KRISANN HUGHES
10360644	BN-511	0000094454	25-JAN-14 15:26:54	Original	P	SETH OLDHAM
10352573	BN-524	0000094457	25-JAN-14 15:53:36	Original	P	DENISE LEE
10368485	RF-337	0000094458	25-JAN-14 16:11:09	Original	P	KRISANN HUGHES
10357107	RF-760	0000094461	25-JAN-14 16:57:35	Original	P	SETH OLDHAM
10368653	RF-960	0000094462	25-JAN-14 17:10:44	Original	P	DENISE LEE
10453926	BN-511	0000094464	25-JAN-14 17:34:05	Original	P	SETH OLDHAM
10352593	RF-760	0000094466	25-JAN-14 17:55:42	Original	P	DENISE LEE
10352409	RF-760	0000094468	26-JAN-14 09:52:17	Original	P	DENISE LEE
10359172	RF-760	0000094472	26-JAN-14 10:40:24	Original	P	DENISE LEE
10368237	RF-760	0000094473	26-JAN-14 11:01:44	Original	P	SETH OLDHAM
10011625	ID-155	0000094476	26-JAN-14 12:50:18	Original	P	CONLEY BEEBE
10087577	RF-001	0000094477	26-JAN-14 13:25:36	Original	P	CONLEY BEEBE
10011625	ID-155	0000094478	26-JAN-14 13:49:59	Replicate / Duplicate	P	JACE DUKE
10087577	RF-001	0000094481	26-JAN-14 14:04:24	RTR OIO	P	JACE DUKE
10011837	IC-603	0000094483	26-JAN-14 14:29:20	Original	P	JACE DUKE
10108300	RF-292	0000094484	26-JAN-14 14:43:27	Original	P	JACE DUKE
10113569	RF-001	0000094485	26-JAN-14 16:15:30	Original	P	DENISE LEE
10011849	IC-603	0000094486	26-JAN-14 16:44:28	Original	P	DENISE LEE
10455977	RF-002	0000094489	26-JAN-14 17:11:57	Original	P	JACE DUKE
10132803	RF-001	0000094490	26-JAN-14 17:25:19	Original	P	DENISE LEE
10456014	RF-002	0000094492	26-JAN-14 17:51:00	Original	P	KRISANN HUGHES

**********Batch Comments**********

Written By	Date	Comment
JDUKE	26-JAN-14 17:59:18	Esigned.
CHINKLE	28-JAN-14 09:12:46	28-JAN-14 CHINKLE AKE This batch is returned for rework. AK does not concur with the recommended IDC change for containers 10453926, 10368653, 10368237, 10360644, 10357107, 10352593, 10352573, 10352409 and 10123450. CHD 01/28/14
SOLDHAM	30-JAN-14 08:35:53	Rework complete.
CHINKLE	30-JAN-14 10:23:07	28-JAN-14 CHINKLE AKE This batch is returned for rework. AK does not concur with the recommended IDC change for containers 10453926, 10368653, 10368237, 10360644, 10357107, 10352593, 10352573, 10352409 and 10123450. CHD 01/28/14 30-JAN-14 CHINKLE AKE Batch is promoted. chd 1/30/14
CSIMMONS	31-JAN-14 15:23:57	This batch was validated to MP-TRUW-8.8.
CSIMMONS	08-FEB-14 09:47:35	Container 10123450: Per review of the audio/video recording with SME it appears that the waste in this container is predominantly plastic in the form of bagging and sheeting. The IDC correct question should be answered "No" recommended IDC UN-00B Change reason waste is debris. The remaining waste weight % should be corrected to 100% Plastic (Waste Materials). The Results Comment should be updated to reflect this waste. There should be an entry in waste parameters for 15 lbs of paper and rags. There should be an entry in waste parameters for "Oil-Dri" of 10 pints. The PCBs Present question should be answered 'No". Please review and make changes as needed.
CSIMMONS	08-FEB-14 09:47:35	Sent batch to operations for rework.
CSIMMONS	08-FEB-14 09:47:35	Container 10132803: After review of A/V recording. The waste in this drum couldn't be sufficiently penetrated to identify prohibited liquid going up the side of the drum because of the lead liner. Please answer Impenetrable dense objects question Yes unacceptable and comments lead liner. NCR 83666 was generated for lead liner. Please review and make changes as needed.
CSIMMONS	08-FEB-14 09:47:35	Container 10011849: The liquid comment in the liquids field should be corrected to read ".20 pints of liquid located in bagging below top chine .06 pints of liquid located at bottom of drum in bagging". There should be an entry made in waste parameters for 12 lbs of plastic bagging. Please review and make changes as needed.
CSIMMONS	08-FEB-14 09:47:35	Container 10352573: Per review of the audio/video recording it appears that the prohibited liquid identified in an aerosol can as .25 pints was over estimated the correct liquid amount is .07 pints which is not a prohibited amount. The liquids field should be updated to reflect .67 pints of liquid total. The liquid comment should be corrected to show ".07 pints of liquid in aerosol can towards the top of the waste". Waste parameters should also be updated to reflect this change. Recommend closure of NCR 83361. Please review and make changes as needed.
CSIMMONS	08-FEB-14 09:47:35	Container 10368653: Per review of the audio/video recording with SME it appears that the waste in this container is predominantly concrete/asphalt. The remaining waste weight % should be corrected to 100% Other Inorganic Materials. The Results Comment should be updated to reflect this waste. There should be an entry made in waste parameters for 10 lbs of "binder for asphalt" in organic matrix, to account for the binder portion of the asphalt. The PCBs Present question should be answered 'No". Please review and make changes as needed.
CSIMMONS	08-FEB-14 09:47:35	Container 10352593: Per review of the audio/video recording with SME it appears that the items identified by the operator as light ballasts are cabinets with electrical components. The PCBs Present question should be answered "No" and the entry in waste parameters for Small Light Ballast should be removed. Please review and make changes as needed.
CSIMMONS	08-FEB-14 09:47:35	Container 10352409: The liquid identified in an aerosol can should be considered as Liquid in an Internal Container. The .03 pints of liquid should be removed and re-entered as Internal Container with Liquid totaling 2.03 pints leaving .01 pint as Other Liquids. Please review and make changes as needed.
CSIMMONS	08-FEB-14 09:47:35	Container 10359172: The PCBs Present question should be corrected to "Yes Prohibited" because this is a debris waste with PCBs present. NCR 83643 was generated for this condition. There should be an entry in waste parameters for a large capacitor (5lbs) as was described by the operator during the exam. Please review and make changes as needed.
CSIMMONS	08-FEB-14 09:47:35	Container 10113569: Per review of the audio/video recording it appears that the Impenetrable Dense Objects question should be answered "Yes, Unacceptable" With comment "lead disk at bottom of the waste"
DLEE	08-FEB-14 14:49:52	Rework completed.
CHINKLE	10-FEB-14 07:21:12	28-JAN-14 CHINKLE AKE This batch is returned for rework. AK does not concur with the recommended IDC change for containers 10453926, 10368653, 10368237, 10360644, 10357107, 10352593, 10352573, 10352409 and 10123450. CHD 01/28/14 30-JAN-14 CHINKLE AKE Batch is promoted. chd 1/30/14 10-FEB-14 CHINKLE AKE This batch is returned for rework. AK does not concur with the recommended IDC change for container

		10123450. CHD 02/10/14
JDUKE	11-FEB-14 12:45:06	rework complete
CHINKLE	12-FEB-14 11:31:59	28-JAN-14 CHINKLE AKE This batch is returned for rework. AK does not concur with the recommended IDC change for containers 10453926, 10368653, 10368237, 10360644, 10357107, 10352593, 10352573, 10352409 and 10123450. CHD 01/28/14 30-JAN-14 CHINKLE AKE Batch is promoted. chd 1/30/14 10-FEB-14 CHINKLE AKE This batch is returned for rework. AK does not concur with the recommended IDC change for container 10123450. CHD 02/10/14 12-FEB-14 CHINKLE AKE Batch is promoted. chd 02/12/14
CSIMMONS	14-FEB-14 08:53:37	Reviewed rework: It appears to be complete and correct.
CSIMMONS	14-FEB-14 08:54:49	Promoted batch to SPM level.
DMARQUARDT	18-FEB-14 09:32:14	Drum 10456014. Prohibited liquids is answered "YES." Please review and correct as necessary.
DMARQUARDT	18-FEB-14 09:32:14	Demote to ITR for rework.
DMARQUARDT	18-FEB-14 09:32:14	Drum 10123450. After discussion with RTR SME, it was decided to rework this analysis. Please review the "Impenetrable Dense Objects" determination and contents of this drum.
DMARQUARDT	18-FEB-14 09:32:14	Drum 10368485. Operator mistakenly placed the cellulosics portion of the respirator cartridges into packaging. Please review and correct as necessary.
CSIMMONS	18-FEB-14 13:05:58	Sent batch to operations for rework per SPM batch comments.
KHUGHES	18-FEB-14 13:29:04	Completed rework
CSIMMONS	18-FEB-14 14:02:53	Promoted batch to SPM level.
CSIMMONS	18-FEB-14 14:02:53	Reviewed rework: It appears to be complete and correct.
DMARQUARDT	19-FEB-14 06:25:03	Reviewed rework. Acceptable.
DMARQUARDT	19-FEB-14 06:25:03	Reviewed and validated. Approve.

**********Batch E-Signature History**********

Approval ID	User ID	Signature Date	Comment
2679946	JDUKE	26-JAN-2014 17:59:18	
2684509	SOLDHAM	30-JAN-2014 08:35:53	Rework complete.
2690210	CSIMMONS	08-FEB-2014 09:47:35	Sent batch to operations for rework.
2690345	DLEE	08-FEB-2014 14:49:52	Rework completed.
2692412	JDUKE	11-FEB-2014 12:45:06	rework complete
2694825	CSIMMONS	14-FEB-2014 08:54:49	Promoted batch to SPM level.
2698371	DMARQUARDT	18-FEB-2014 09:32:14	Demote to ITR for rework.
2698661	CSIMMONS	18-FEB-2014 13:05:58	Sent batch to operations for rework per SPM batch comments.
2698685	KHUGHES	18-FEB-2014 13:29:04	Completed rework
2698756	CSIMMONS	18-FEB-2014 14:02:53	Promoted batch to SPM level.
2699331	DMARQUARDT	19-FEB-2014 06:25:03	Reviewed and validated. Approve.

***** End of Batch Report Coversheet Report *****

AMWTP
Advanced Mixed Waste Treatment Project

AMWTP

Non-Conformance Report

Date: 22-Sep-2014
Time: 08:39

*****Batch NCR(s)*****

Batch Type	RTR	Batch ID	RTR14-00006		
Trackwise Number		**Status**		**Opened Date**	**Closed Date**

*****Container NCR(s)*****

Container ID *or related Batch ID*	Trackwise Number	Status	Opened Date	Closed Date
10011625	83370	OPEN	26-JAN-14	
10011625	83371	OPEN	26-JAN-14	
10011837	83403	CLOSED	27-JAN-14	17-MAR-14
10011849	83376	OPEN	26-JAN-14	
10011849	83402	CLOSED	27-JAN-14	17-MAR-14
10087577	21370	CLOSED	25-MAR-06	17-MAR-14
10087577	83372	OPEN	26-JAN-14	
10087577	83373	OPEN	26-JAN-14	
10113569	24952	CLOSED	19-DEC-06	19-OCT-11
10113569	25260	CLOSED	10-JAN-07	17-MAR-14
10113569	66376	CLOSED	19-OCT-11	17-MAR-14
10113569	83377	OPEN	26-JAN-14	
10123450	25478	CLOSED	20-JAN-07	20-FEB-14
10123450	83359	CLOSED	25-JAN-14	20-FEB-14
10123450	83747	CLOSED	11-FEB-14	20-FEB-14
10132803	24969	CLOSED	19-DEC-06	17-MAR-14
10132803	83379	OPEN	26-JAN-14	
10132803	83666	OPEN	07-FEB-14	
10352409	83368	OPEN	26-JAN-14	
10352409	83369	OPEN	26-JAN-14	
10352573	83361	OPEN	25-JAN-14	
10357107	83362	CLOSED	25-JAN-14	20-FEB-14
10359172	83643	OPEN	07-FEB-14	
10360644	83360	OPEN	25-JAN-14	
10368653	83363	OPEN	25-JAN-14	
10453926	83364	OPEN	25-JAN-14	
10453926	83365	OPEN	25-JAN-14	

*****End of Non-Conformance Report*****

AMWTP
Advanced Mixed Waste Treatment Project

AMWTP

Checklist Report

Date: 22-Sep-2014

Time: 08:39

Batch Id RTR14-00006 **Open Date** 25-JAN-14 **Close Date** 26-JAN-14

Reviewer CRAIG SIMMONS **Approval Level** Independent Technical Reviewer

Approval Date 08-FEB-14 **Review Iteration** 1

Question Text	Answer	Requirement	Comment
1. Is the Batch Data Report (BDR) and Quality Assurance (QA) documentation complete with the following: o Real-Time Radiography (RTR) Batch Coversheet o Table of Contents (manual review only) o RTR Analysis reports o Replicate Scan o Replicate Comparison o Independent Observation o ITR checklist (Form-1412, manual review only) o Form-1491, Batch Data Report Supplemental Comment Form (manual review only) o Associated NCRs (referenced in Waste Tracking System [WTS]) o Audio/Video Recording References?	Yes		
2. Are there 20 containers or less in the batch?	Yes		
3. Was the image quality indicator (IQI) satisfactory?	Yes		
4. Does every container in the batch reference an audio/video recording?	Yes		
5. Is there a completed radiography data analysis for each container in the batch?	Yes		
6. Was each RTR Operator qualified at the time of the radiography event?	Yes		
7. Was the data generated in a technically correct manner using the correct revision of INST-OI-12, Real-Time Radiography Operations (Drum)?	Yes		
8. Was the correct procedure and revision documented on all analysis reports?	Yes		
9. Has the E-signature History review been performed?	Yes		
10. Does the RTR operator confirm that the physical form matched the waste stream description and waste matrix code?	Yes		
11. Does the packaging weight plus the net weight equal the gross weight of the container in the estimated waste material parameters?	Yes		
12. Were all entries into the waste material items section assigned to the correct waste material parameters?	No		See batch comments.
13. Has the description of rigid liners and layers of confinement been properly documented, as applicable?	Yes		
14. Was the presence or absence of prohibited items properly documented?	Yes		
15. If prohibited items were identified, have appropriate nonconformance reports (NCRs) been generated?	Yes		
16. Were the containers examined between October and April in compliance with the preheat requirements?	Yes		
17. Were all proper units and significant figures used for all reported volumes/weights?	Yes		
18. Was there a valid replicate scan performed (at least one container per day, or once per testing batch, whichever is less frequent)? o Record the container number, the replicate observation date in the comment section of this checklist. o Record any issues or concerns in the batch comment section.	Yes		The replicate scan was performed on container 10011625on 01/26/14 Both operators entered a dense metal pipe/container in the "Add material items" in WTS with different weights. The remaining waste is the metal container but they only entered it to the Waste Items by weight to account for the sealed container > 4 liters and one layer of confinement. Neither of these requires rework.
19. Was there a valid Operator Independent Observation	Yes		The OIO scan was performed on container 10087577

Batch Id RTR14-00006 **Open Date** 25-JAN-14 **Close Date** 26-JAN-14

Reviewer CRAIG SIMMONS **Approval Level** Independent Technical Reviewer
Approval Date 08-FEB-14 **Review Iteration** 1

Question Text	Answer	Requirement	Comment
(OIO) (not the replicate) performed (at least one container per day, or once per testing batch, whichever is less frequent)? o Record the container number and the OIO date in the comment section of this checklist. o Record any issues or concerns in the batch comment section.			on 01/26/14 The original operator entered the weight of the lead liner as 50 lbs. The OIO operator entered the weight of the lead liner as 25 lbs. I agree with the original operator. There were other minor differences between the exams; these differences don't affect the DQOs or disposition of the drum
20. Were any significant differences identified that would affect the original disposition of the replicate and OIO, or affect data quality objectives (DQOs)? If so, ensure an NCR was generated and WTS flagged.	No		
21. Were the RTR quality assurance objectives (QAOs) met? o Precision o Accuracy o Completeness o Comparability	Yes		
22. Were any NCRs generated for containers containing prohibited items, or any non-conforming conditions that failed to meet DQOs or QAOs? o If so, include the NCRs, as appropriate, in the BDR.	Yes		
23. Were the rework requirements clearly identified in WTS or on the BDR?	Yes		See batch comments.

Batch Id RTR14-00006 **Open Date** 25-JAN-14 **Close Date** 26-JAN-14

Reviewer CRAIG SIMMONS **Approval Level** Independent Technical Reviewer

Approval Date 14-FEB-14 **Review Iteration** 2

Question Text	Answer	Requirement	Comment
1. Is the Batch Data Report (BDR) and Quality Assurance (QA) documentation complete with the following: o Real-Time Radiography (RTR) Batch Coversheet o Table of Contents (manual review only) o RTR Analysis reports o Replicate Scan o Replicate Comparison o Independent Observation o ITR checklist (Form-1412, manual review only) o Form-1491, Batch Data Report Supplemental Comment Form (manual review only) o Associated NCRs (referenced in Waste Tracking System [WTS]) o Audio/Video Recording References?	Yes		
2. Are there 20 containers or less in the batch?	Yes		
3. Was the image quality indicator (IQI) satisfactory?	Yes		
4. Does every container in the batch reference an audio/video recording?	Yes		
5. Is there a completed radiography data analysis for each container in the batch?	Yes		
6. Was each RTR Operator qualified at the time of the radiography event?	Yes		
7. Was the data generated in a technically correct manner using the correct revision of INST-OI-12, Real-Time Radiography Operations (Drum)?	Yes		
8. Was the correct procedure and revision documented on all analysis reports?	Yes		
9. Has the E-signature History review been performed?	Yes		
10. Does the RTR operator confirm that the physical form matched the waste stream description and waste matrix code?	Yes		
11. Does the packaging weight plus the net weight equal the gross weight of the container in the estimated waste material parameters?	Yes		
12. Were all entries into the waste material items section assigned to the correct waste material parameters?	Yes		
13. Has the description of rigid liners and layers of confinement been properly documented, as applicable?	Yes		
14. Was the presence or absence of prohibited items properly documented?	Yes		
15. If prohibited items were identified, have appropriate nonconformance reports (NCRs) been generated?	Yes		
16. Were the containers examined between October and April in compliance with the preheat requirements?	Yes		
17. Were all proper units and significant figures used for all reported volumes/weights?	Yes		
18. Was there a valid replicate scan performed (at least one container per day, or once per testing batch, whichever is less frequent)? o Record the container number, the replicate observation date in the comment section of this checklist. o Record any issues or concerns in the batch comment section.	Yes		The replicate scan was performed on container 10011625 on 01/26/14 Both operators entered a dense metal pipe/container in the "Add material items" in WTS with different weights. The remaining waste is the metal container but they only entered it to the Waste Items by weight to account for the sealed container > 4 liters and one layer of confinement. Neither of these requires rework.
19. Was there a valid Operator Independent Observation	Yes		The OIO scan was performed on container 10087577

Batch Id RTR14-00006 **Open Date** 25-JAN-14 **Close Date** 26-JAN-14

Reviewer CRAIG SIMMONS **Approval Level** Independent Technical Reviewer

Approval Date 14-FEB-14 **Review Iteration** 2

Question Text	Answer	Requirement	Comment
(OIO) (not the replicate) performed (at least one container per day, or once per testing batch, whichever is less frequent)? o Record the container number and the OIO date in the comment section of this checklist. o Record any issues or concerns in the batch comment section.			on 01/26/14 The original operator entered the weight of the lead liner as 50 lbs. The OIO operator entered the weight of the lead liner as 25 lbs. I agree with the original operator. There were other minor differences between the exams; these differences don't affect the DQOs or disposition of the drum
20. Were any significant differences identified that would affect the original disposition of the replicate and OIO, or affect data quality objectives (DQOs)? If so, ensure an NCR was generated and WTS flagged.	No		
21. Were the RTR quality assurance objectives (QAOs) met? o Precision o Accuracy o Completeness o Comparability	Yes		
22. Were any NCRs generated for containers containing prohibited items, or any non-conforming conditions that failed to meet DQOs or QAOs? o If so, include the NCRs, as appropriate, in the BDR.	Yes		
23. Were the rework requirements clearly identified in WTS or on the BDR?	Yes		See batch comments.

Batch Id RTR14-00006 **Open Date** 25-JAN-14 **Close Date** 26-JAN-14

Reviewer CRAIG SIMMONS **Approval Level** Independent Technical Reviewer

Approval Date 18-FEB-14 **Review Iteration** 3

Question Text	Answer	Requirement	Comment
1. Is the Batch Data Report (BDR) and Quality Assurance (QA) documentation complete with the following: o Real-Time Radiography (RTR) Batch Coversheet o Table of Contents (manual review only) o RTR Analysis reports o Replicate Scan o Replicate Comparison o Independent Observation o ITR checklist (Form-1412, manual review only) o Form-1491, Batch Data Report Supplemental Comment Form (manual review only) o Associated NCRs (referenced in Waste Tracking System [WTS]) o Audio/Video Recording References?	Yes		
2. Are there 20 containers or less in the batch?	Yes		
3. Was the image quality indicator (IQI) satisfactory?	Yes		
4. Does every container in the batch reference an audio/video recording?	Yes		
5. Is there a completed radiography data analysis for each container in the batch?	Yes		
6. Was each RTR Operator qualified at the time of the radiography event?	Yes		
7. Was the data generated in a technically correct manner using the correct revision of INST-OI-12, Real-Time Radiography Operations (Drum)?	Yes		
8. Was the correct procedure and revision documented on all analysis reports?	Yes		
9. Has the E-signature History review been performed?	Yes		
10. Does the RTR operator confirm that the physical form matched the waste stream description and waste matrix code?	Yes		
11. Does the packaging weight plus the net weight equal the gross weight of the container in the estimated waste material parameters?	Yes		
12. Were all entries into the waste material items section assigned to the correct waste material parameters?	Yes		
13. Has the description of rigid liners and layers of confinement been properly documented, as applicable?	Yes		
14. Was the presence or absence of prohibited items properly documented?	Yes		
15. If prohibited items were identified, have appropriate nonconformance reports (NCRs) been generated?	Yes		
16. Were the containers examined between October and April in compliance with the preheat requirements?	Yes		
17. Were all proper units and significant figures used for all reported volumes/weights?	Yes		
18. Was there a valid replicate scan performed (at least one container per day, or once per testing batch, whichever is less frequent)? o Record the container number, the replicate observation date in the comment section of this checklist. o Record any issues or concerns in the batch comment section.	Yes		The replicate scan was performed on container 10011625 on 01/26/14 Both operators entered a dense metal pipe/container in the "Add material items" in WTS with different weights. The remaining waste is the metal container but they only entered it to the Waste Items by weight to account for the sealed container > 4 liters and one layer of confinement. Neither of these requires rework.
19. Was there a valid Operator Independent Observation	Yes		The OIO scan was performed on container 10087577

Batch Id RTR14-00006 **Open Date** 25-JAN-14 **Close Date** 26-JAN-14

Reviewer CRAIG SIMMONS **Approval Level** Independent Technical Reviewer

Approval Date 18-FEB-14 **Review Iteration** 3

Question Text	Answer	Requirement	Comment
(OIO) (not the replicate) performed (at least one container per day, or once per testing batch, whichever is less frequent)? o Record the container number and the OIO date in the comment section of this checklist. o Record any issues or concerns in the batch comment section.			on 01/26/14 The original operator entered the weight of the lead liner as 50 lbs. The OIO operator entered the weight of the lead liner as 25 lbs. I agree with the original operator. There were other minor differences between the exams; these differences don't affect the DQOs or disposition of the drum
20. Were any significant differences identified that would affect the original disposition of the replicate and OIO, or affect data quality objectives (DQOs)? If so, ensure an NCR was generated and WTS flagged.	No		
21. Were the RTR quality assurance objectives (QAOs) met? o Precision o Accuracy o Completeness o Comparability	Yes		
22. Were any NCRs generated for containers containing prohibited items, or any non-conforming conditions that failed to meet DQOs or QAOs? o If so, include the NCRs, as appropriate, in the BDR.	Yes		
23. Were the rework requirements clearly identified in WTS or on the BDR?	Yes		See batch comments.

Batch Id RTR14-00006 **Open Date** 25-JAN-14 **Close Date** 26-JAN-14

Reviewer CRAIG SIMMONS **Approval Level** Independent Technical Reviewer

Approval Date 18-FEB-14 **Review Iteration** 4

Question Text	Answer	Requirement	Comment
1. Is the Batch Data Report (BDR) and Quality Assurance (QA) documentation complete with the following: o Real-Time Radiography (RTR) Batch Coversheet o Table of Contents (manual review only) o RTR Analysis reports o Replicate Scan o Replicate Comparison o Independent Observation o ITR checklist (Form-1412, manual review only) o Form-1491, Batch Data Report Supplemental Comment Form (manual review only) o Associated NCRs (referenced in Waste Tracking System [WTS]) o Audio/Video Recording References?	Yes		
2. Are there 20 containers or less in the batch?	Yes		
3. Was the image quality indicator (IQI) satisfactory?	Yes		
4. Does every container in the batch reference an audio/video recording?	Yes		
5. Is there a completed radiography data analysis for each container in the batch?	Yes		
6. Was each RTR Operator qualified at the time of the radiography event?	Yes		
7. Was the data generated in a technically correct manner using the correct revision of INST-OI-12, Real-Time Radiography Operations (Drum)?	Yes		
8. Was the correct procedure and revision documented on all analysis reports?	Yes		
9. Has the E-signature History review been performed?	Yes		
10. Does the RTR operator confirm that the physical form matched the waste stream description and waste matrix code?	Yes		
11. Does the packaging weight plus the net weight equal the gross weight of the container in the estimated waste material parameters?	Yes		
12. Were all entries into the waste material items section assigned to the correct waste material parameters?	Yes		
13. Has the description of rigid liners and layers of confinement been properly documented, as applicable?	Yes		
14. Was the presence or absence of prohibited items properly documented?	Yes		
15. If prohibited items were identified, have appropriate nonconformance reports (NCRs) been generated?	Yes		
16. Were the containers examined between October and April in compliance with the preheat requirements?	Yes		
17. Were all proper units and significant figures used for all reported volumes/weights?	Yes		
18. Was there a valid replicate scan performed (at least one container per day, or once per testing batch, whichever is less frequent)? o Record the container number, the replicate observation date in the comment section of this checklist. o Record any issues or concerns in the batch comment section.	Yes		The replicate scan was performed on container 10011625 on 01/26/14 Both operators entered a dense metal pipe/container in the "Add material items" in WTS with different weights. The remaining waste is the metal container but they only entered it to the Waste Items by weight to account for the sealed container > 4 liters and one layer of confinement. Neither of these requires rework.
19. Was there a valid Operator Independent Observation	Yes		The OIO scan was performed on container 10087577

Batch Id RTR14-00006 **Open Date** 25-JAN-14 **Close Date** 26-JAN-14

Reviewer CRAIG SIMMONS **Approval Level** Independent Technical Reviewer

Approval Date 18-FEB-14 **Review Iteration** 4

Question Text	Answer	Requirement	Comment
(OIO) (not the replicate) performed (at least one container per day, or once per testing batch, whichever is less frequent)? o Record the container number and the OIO date in the comment section of this checklist. o Record any issues or concerns in the batch comment section.			on 01/26/14 The original operator entered the weight of the lead liner as 50 lbs. The OIO operator entered the weight of the lead liner as 25 lbs. I agree with the original operator. There were other minor differences between the exams; these differences don't affect the DQOs or disposition of the drum
20. Were any significant differences identified that would affect the original disposition of the replicate and OIO, or affect data quality objectives (DQOs)? If so, ensure an NCR was generated and WTS flagged.	No		
21. Were the RTR quality assurance objectives (QAOs) met? o Precision o Accuracy o Completeness o Comparability	Yes		
22. Were any NCRs generated for containers containing prohibited items, or any non-conforming conditions that failed to meet DQOs or QAOs? o If so, include the NCRs, as appropriate, in the BDR.	Yes		
23. Were the rework requirements clearly identified in WTS or on the BDR?	Yes		See batch comments.

Batch Id RTR14-00006 **Open Date** 25-JAN-14 **Close Date** 26-JAN-14

Reviewer DAVE MARQUARDT **Approval Level** SPM Data Validation

Approval Date 18-FEB-14 **Review Iteration** 1

Question Text	Answer	Requirement	Comment
(1) Has the batch received a Data Generation Level Independent Technical Review?	Yes	MP-TRUW-8.2, C3-10b(1)	
(2) Is the Independent Technical Review checklist complete?	Yes	MP-TRUW-8.2, C3-10b(1)	
(3) When identified, were polychlorinated biphenyls (PCBs), mercury, lead, or other hazardous contaminants consistent with the waste stream acceptable knowledge (AK) Summary Report(s) and/or AK documentation?	Yes	MP-TRUW-8.2, C4-3	
(4) Are any ignitable, corrosive, or reactive wastes identified in this waste?	No	MP-TRUW-8.2, C4-3	
(5) Are the packaging configurations identified on the real-time radiography (RTR) consistent with the waste stream AK Summary Report(s) and/or AK documentation?	Yes	MP-TRUW-8.2, C4-3	
(6) Do the containers in this batch contain typical waste items consistent with waste stream AK Summary Report(s) and/or AK documentation?	Yes	MP-TRUW-8.2, C4-3	
(7) Are the Waste Matrix Codes (WMCs) and physical form descriptions consistent with AK?	Yes	MP-TRUW-8.2, C4-3	
(8) Have all AK discrepancies been resolved and have all AK Resolution checklists been approved? Reference all waste stream AK documentation used in review of this data package.	Yes	MP-TRUW-8.2, C4-3	RPT-TRUW-05, RPT-TRUW-06, RPT-TRUW-12, RPT-TRUW-56. Drums 10011837 and 10011849 both received IDC changes per AKR-14-819. Drum 10123450 received an IDC change per AKR-11-715 R1. All other drums except 10011625, 10087577, 10108300, 10113569, 10455977, 10132803 and 10456014 received an IDC at RTR. Previously all were unknown or had no historical information.
(9) Have all applicable Quality Assurance Objectives (QAOs) been met, including precision, accuracy, completeness, and comparability, by using the appropriate acceptance criteria for each as specified in MP-TRUW-8.2, Quality Assurance Project Plan Section C3-4? Precision ¿ Verified prior to use by tuning precisely enough to demonstrate compliance with QAOs through viewing an image test pattern, as evidenced by a satisfactory Image Quality Indicator (IQI). ¿ Have discrepancies, if any, between radiography operators been reconciled? Accuracy ¿ Use of a target to tune the image for maximum sharpness as evidenced by a satisfactory IQI and by requiring operators to successfully identify 100% of the required items in a training container during initial and subsequent qualifications. Completeness ¿ An audio/videotape (or equivalent media) of the radiography examination and a validated radiography data form will be obtained for 100% of the retrievably stored waste container in the program for all waste containers subject to radiography. Comparability ¿ Use of standardized radiography procedures and operator qualifications.	Yes	MP-TRUW-8.2, C3-4a	
(10) Do the waste container contents match the WMC, waste stream description and identify the absence of prohibited items?	Yes	MP-TRUW-8.2, C1-3 and B3-11	
(11) If residual liquids exist in the container, is an estimate of quantity given?	Yes	MP-TRUW-8.2, C1-3	
(12) Do the individual container reports contain the (a) IDC,	Yes	MP-TRUW-8.2, C1-3 and	

Batch Id RTR14-00006 **Open Date** 25-JAN-14 **Close Date** 26-JAN-14

Reviewer DAVE MARQUARDT **Approval Level** SPM Data Validation

Approval Date 18-FEB-14 **Review Iteration** 1

Question Text	Answer	Requirement	Comment
(b) Waste Matrix Code, (c) audio/video recording reference, (d) gross container weight, (e) waste material parameter weights, and (f) signature and date of examination?		C3-11a	
(13) Have the IDC, WMC, and/or waste stream for all containers in the batch remained the same as originally assigned by the historical designation? If not, note the container number in the comment field and notify the Acceptable Knowledge Expert (AKE) if NCR does not exist on the WMC and IDC change.	No	MP-TRUW-8.2, C1-3 and C3-4a	Drums 10011837 and 10011849 both received IDC changes per AKR-14-819. Drum 10123450 received an IDC change per AKR-11-715 R1. All other drums except 10011625, 10087577, 10108300, 10113569, 10455977, 10132803 and 10456014 received an IDC at RTR. Previously all were unknown or had no historical information.
(14) Was a replicate scan performed by an independent operator on at least one container per day or once per testing batch, whichever is less frequent, by a qualified radiography operator that was not involved in the original scan of the waste container?	Yes	MP-TRUW-8.2, B1-3, C3-4a, and C3-10b(1)	
(15) Has an independent observation of one scan (not the replicate) been performed by a qualified operator that was not involved in the original scan of the waste container, at a rate of once per day or once per batch, whichever is less frequent? Record date of observation and any issues or concerns in the comment section.	Yes	MP-TRUW-8.2, C1-3 and C3-4a	The OIO scan was performed on container 10087577 on 01/26/14. No issues.
(16) Did personnel having current qualifications perform all RTR examinations?	Yes	MP-TRUW-8.1, Appendix F	
(17) Verify the correct procedure and revision number were used for all containers in this batch.	Yes	MP-TRUW-8.2, C3-4a	
(18) Verify the audio and video checks were performed and are satisfactory.	Yes	MP-TRUW-8.2, C3-4a	
(19) Verify that there are 20 or fewer containers in the batch.	Yes	MP-TRUW-8.2, C1-3	
(20) Does the data for all containers within this batch meet the review, validation, and verification requirements? · Are proper units (e.g. Liters or pounds) and significant figure used? · Is the BDR complete (all pages identified in the BDR and numbered accordingly)? - RTR Batch Coversheet - Table of Contents (manual review only) - RTR Analysis reports - Replicate Scan - Replicate Comparison - Independent Observation - Form-1412, ITR checklist - Associated NCRs - Form, 1491, Batch Data Report Supplemental Comment Form, as applicable - Audio/Video Recording References	Yes	MP-TRUW-8.2, C3 10b(2)	
(21) Review all NCR(s) (open and closed). Can the batch be approved?	Yes	MP-TRUW-8.2, C3-13	
(22) Is all data associated with this BDR acceptable for signature release?	No	MP-TRUW-8.2, C3 10b(2)	See SPM batch comments.

Batch Id RTR14-00006 **Open Date** 25-JAN-14 **Close Date** 26-JAN-14

Reviewer DAVE MARQUARDT **Approval Level** SPM Data Validation

Approval Date 19-FEB-14 **Review Iteration** 2

Question Text	Answer	Requirement	Comment
(1) Has the batch received a Data Generation Level Independent Technical Review?	Yes	MP-TRUW-8.2, C3-10b(1)	
(2) Is the Independent Technical Review checklist complete?	Yes	MP-TRUW-8.2, C3-10b(1)	
(3) When identified, were polychlorinated biphenyls (PCBs), mercury, lead, or other hazardous contaminants consistent with the waste stream acceptable knowledge (AK) Summary Report(s) and/or AK documentation?	Yes	MP-TRUW-8.2, C4-3	
(4) Are any ignitable, corrosive, or reactive wastes identified in this waste?	No	MP-TRUW-8.2, C4-3	
(5) Are the packaging configurations identified on the real-time radiography (RTR) consistent with the waste stream AK Summary Report(s) and/or AK documentation?	Yes	MP-TRUW-8.2, C4-3	
(6) Do the containers in this batch contain typical waste items consistent with waste stream AK Summary Report(s) and/or AK documentation?	Yes	MP-TRUW-8.2, C4-3	
(7) Are the Waste Matrix Codes (WMCs) and physical form descriptions consistent with AK?	Yes	MP-TRUW-8.2, C4-3	
(8) Have all AK discrepancies been resolved and have all AK Resolution checklists been approved? Reference all waste stream AK documentation used in review of this data package.	Yes	MP-TRUW-8.2, C4-3	RPT-TRUW-05. RPT-TRUW-06. RPT-TRUW-12. RPT-TRUW-56. Drums 10011837 and 10011849 both received IDC changes per AKR-14-819. Drum 10123450 received an IDC change per AKR-11-715 R1. All other drums except 10011625, 10087577, 10108300, 10113569, 10455977, 10132803 and 10456014 received an IDC at RTR. Previously all were unknown or had no historical information.
(9) Have all applicable Quality Assurance Objectives (QAOs) been met, including precision, accuracy, completeness, and comparability, by using the appropriate acceptance criteria for each as specified in MP-TRUW-8.2, Quality Assurance Project Plan Section C3-4? Precision ¿ Verified prior to use by tuning precisely enough to demonstrate compliance with QAOs through viewing an image test pattern, as evidenced by a satisfactory Image Quality Indicator (IQI). ¿ Have discrepancies, if any, between radiography operators been reconciled? Accuracy ¿ Use of a target to tune the image for maximum sharpness as evidenced by a satisfactory IQI and by requiring operators to successfully identify 100% of the required items in a training container during initial and subsequent qualifications. Completeness ¿ An audio/videotape (or equivalent media) of the radiography examination and a validated radiography data form will be obtained for 100% of the retrievably stored waste container in the program for all waste containers subject to radiography. Comparability ¿ Use of standardized radiography procedures and operator qualifications.	Yes	MP-TRUW-8.2, C3-4a	
(10) Do the waste container contents match the WMC, waste stream description and identify the absence of prohibited items?	Yes	MP-TRUW-8.2, C1-3 and B3-11	
(11) If residual liquids exist in the container, is an estimate of quantity given?	Yes	MP-TRUW-8.2, C1-3	
(12) Do the individual container reports contain the (a) IDC,	Yes	MP-TRUW-8.2, C1-3 and	

Batch Id RTR14-00006 **Open Date** 25-JAN-14 **Close Date** 26-JAN-14

Reviewer DAVE MARQUARDT **Approval Level** SPM Data Validation
Approval Date 19-FEB-14 **Review Iteration** 2

Question Text	Answer	Requirement	Comment
(b) Waste Matrix Code, (c) audio/video recording reference, (d) gross container weight, (e) waste material parameter weights, and (f) signature and date of examination?		C3-11a	
(13) Have the IDC, WMC, and/or waste stream for all containers in the batch remained the same as originally assigned by the historical designation? If not, note the container number in the comment field and notify the Acceptable Knowledge Expert (AKE) if NCR does not exist on the WMC and IDC change.	No	MP-TRUW-8.2, C1-3 and C3-4a	Drums 10011837 and 10011849 both received IDC changes per AKR-14-819. Drum 10123450 received an IDC change per AKR-11-715 R1. All other drums except 10011625, 10087577, 10108300, 10113569, 10455977, 10132803 and 10456014 received an IDC at RTR. Previously all were unknown or had no historical information.
(14) Was a replicate scan performed by an independent operator on at least one container per day or once per testing batch, whichever is less frequent, by a qualified radiography operator that was not involved in the original scan of the waste container?	Yes	MP-TRUW-8.2, B1-3, C3-4a, and C3-10b(1)	
(15) Has an independent observation of one scan (not the replicate) been performed by a qualified operator that was not involved in the original scan of the waste container, at a rate of once per day or once per batch, whichever is less frequent? Record date of observation and any issues or concerns in the comment section.	Yes	MP-TRUW-8.2, C1-3 and C3-4a	The OIO scan was performed on container 10087577 on 01/26/14. No issues.
(16) Did personnel having current qualifications perform all RTR examinations?	Yes	MP-TRUW-8.1, Appendix F	
(17) Verify the correct procedure and revision number were used for all containers in this batch.	Yes	MP-TRUW-8.2, C3-4a	
(18) Verify the audio and video checks were performed and are satisfactory	Yes	MP-TRUW-8.2, C3-4a	
(19) Verify that there are 20 or fewer containers in the batch.	Yes	MP-TRUW-8.2, C1-3	
(20) Does the data for all containers within this batch meet the review, validation, and verification requirements? · Are proper units (e.g. Liters or pounds) and significant figure used? · Is the BDR complete (all pages identified in the BDR and numbered accordingly)? - RTR Batch Coversheet - Table of Contents (manual review only) - RTR Analysis reports - Replicate Scan - Replicate Comparison - Independent Observation - Form-1412, ITR checklist - Associated NCRs - Form, 1491, Batch Data Report Supplemental Comment Form, as applicable - Audio/Video Recording References	Yes	MP-TRUW-8.2, C3 10b(2)	
(21) Review all NCR(s) (open and closed). Can the batch be approved?	Yes	MP-TRUW-8.2, C3-13	
(22) Is all data associated with this BDR acceptable for signature release?	Yes	MP-TRUW-8.2, C3 10b(2)	

Batch Id RTR14-00006 **Open Date** 25-JAN-14 **Close Date** 26-JAN-14

Esignature History

Esig Approval ID	User ID	Esig Date	Approval Level	Comments
2699331	DMARQUARDT	19-FEB-14	SPM	Reviewed and validated. Approve.
2698756	CSIMMONS	18-FEB-14	ITR	Promoted batch to SPM level.
2698661	CSIMMONS	18-FEB-14	ITR	Sent batch to operations for rework per SPM batch comments.
2698371	DMARQUARDT	18-FEB-14	SPM	Demote to ITR for rework.
2694825	CSIMMONS	14-FEB-14	ITR	Promoted batch to SPM level.
2690210	CSIMMONS	08-FEB-14	ITR	Sent batch to operations for rework.

AMWTP
Advanced Mixed Waste Treatment Project

AMWTP

RTR Analysis Report

Date: 22-Sep-2014

Time: 08:40

Batch Id RTR14-00006 **Container Id** 10123450 **Analysis Id** 0000094452

Container Type A drum, 55 Gallon Drum (17H) **Analysis Status** Pass

RTR Date 25-JAN-2014 14:34 **Gross Weight** 273.420 Lbs. **Net Weight** 197.420 Lbs

Equipment Z-213-106 **Waste Matrix Code** S5300 **IDC** RF-337 Plastics, Teflon, Washables, PVC

Recording Id 2RTR14-00002 **Procedure Id** INST-OI-12 **Revision** 52 **Approval Level** SPM

Is Test Pattern Resolution Ok? Yes **Start Side** A **Replicate** No **OIO** No

Audio Visual Ok? Yes **Operator** JDUKE

Result Comment Waste appears to be sludge.
AK does not concur with the recommended IDC change from RF-002 to UN-00A for container 10123450 because AK assigned the correct historical ID, IDRF074221209, to this container and recommends the historical IDC , RF-002. No AKR or NCR is required. CHD 01/28/14
Rework to change IDC per AK. ESO 01/30/14
AK concurs with the recommended IDC, RF-002, for container 10123450. No AKR or NCR is necessary. CHD 1/30/14
Rework to change IDC to UN-00B after ITR & RTR SME review recording. Please, disregard the previous waste description of sludge. The remaining waste appears to be plastic bagging and sheeting. Reworked the PCBs to No and corrected the waste parameters. DKL 2/8/14
AK does not concur with the recommended IDC change from RF-002 to UN-00B for container 10123450. Instead, AK recommends an IDC of RF-337. AN AKR and NCR will be required. CHD 02/10/14
Reworked recommened IDC change from RF-002 to RF-337 Per AK. JED 02/11/14
AK concurs with the recommended IDC change from RF-002 to RF-337 for container 10123450. AKR-11-715- was revised (R1) and attached to NCR 83747 to support this change. CHD 02/12/14
(rework) Entered "No" into Impenetrable Dense Objects field. KH 18FEB14

Package

IDC Correct Yes **Recommended IDC** RF-337 **Summary Category** S5000

Idc Change Reason Waste appears to be plastic debris, Per AK

Rigid Liner Present? Yes **LinerType** TYPE 1

Liner Punctured? Yes **Sharp Objects?** No

Liner Lid Present? Yes **Sharp Objects Are Protected?** Yes

Liner Lid Deformed? No **Layers Of Confinement** 1

Fill Factor 80

Bag Closure Method Twisted and Taped

Liquids

Liquid Present? No **Internal Container with Liquid** No

Internal Container with Liquid 0 pints **LA Candidate** No

Liquid Between Liner & Drum 0 pints **Containerized Liquid**

Total Liquid Amount 0 pints **Containerized Liquid Amt** 0 pints

Other Liquids 0 pints **Comment**

Prohibited Liquids Present No **Comment**

Contents-Drum or Box

	Value	Comment		Value	Comment
Lead?	No		Mercury Present?	No	
Wet Cell Batteries?	No		Explosives?	No	
Prohibited Compressed Gases?	No		PCBs Present?	No	
Aerosol Cans?	No		PCB Mass (lbs)	0	
Non-Mixed Hazardous Waste Present?	No		Sealed Containers Over 4L?	No	

Non-Radionuclide Pyrophoric Materials Present? No

Waste exhibiting the characteristics of Ignitability, Corrosivity or Reactivity Present? No

Wastes Incompatible with backfill, seal and panel closure materials, container and packaging materials,shipping container or other wastes? No

Impenetrable Dense Objects? No

Waste Material Items

Packaging Materials

Material Item	Quantity	Unit	Unit Wt(lbs)	Item Wt(lbs)
90 mil liner	1.000	EACH	16.000	16.000
Drum plastic bag	1.000	EACH	1.000	1.000

Batch Id RTR14-00006 **Container Id** 10123450 **Analysis Id** 0000094452

Waste Items byWeight

Material Item	Quantity	Unit	Unit Wt(lbs)	Item Wt(lbs)
Paper and Rags	1.000	EACH	15.000	15.000
metal debris, piping, and wiring	1.000	EACH	2.500	2.500

Waste Items by Volume

Material Item	Quantity	Unit	Unit Wt(lbs)	Item Wt(lbs)
Oil-Dri (Inside 55 gal drum)	10.000	PINTS	0.420	4.200

Waste Parameters

Waste Parameter	Remaining Weight %	Actual Weight Lbs
Iron-based Metals/Alloys	0.000	2.500
Aluminum-based Metals/Alloys	0.000	0.000
Other metals	0.000	0.000
Other Inorganic Materials	0.000	4.200
Cellulosics	0.000	15.000
Rubber	0.000	0.000
Plastic (Waste Materials)	100.000	175.720
Inorganic matrix	0.000	0.000
Organic matrix	0.000	0.000
Soils/gravel	0.000	0.000
Steel (packaging materials)	0.000	59.000
Plastic (packaging materials)	0.000	17.000
Cellulosics Packaging	0.000	0.000

Analysis Esignature History

Esig Approval Id	User Id	Esignature Date	Comment
2698676	KHUGHES	18-FEB-2014 13:19	
2693263	CHINKLE	12-FEB-2014 11:31	Batch is promoted. chd 02/12/14
2692411	JDUKE	11-FEB-2014 12:44	Reworked
2691265	CHINKLE	10-FEB-2014 07:21	This batch is returned for rework. AK does not concur with the recommended IDC change for container 10123450. CHD 02/10/14
2690319	DLEE	08-FEB-2014 13:57	
2684830	CHINKLE	30-JAN-2014 10:23	Batch is promoted. chd 1/30/14
2684485	SOLDHAM	30-JAN-2014 08:23	
2680831	CHINKLE	28-JAN-2014 09:12	This batch is returned for rework. AK does not concur with the recommended IDC change for containers 10453926, 10368653, 10368237, 10360644, 10357107, 10352593, 10352573, 10352409 and 10123450. CHD 01/28/14
2679594	JDUKE	25-JAN-2014 14:34	

Batch Id RTR14-00006 **Container Id** 10360644 **Analysis Id** 0000094454

Container Type A drum, 55 Gallon Drum (17H) **Analysis Status** Pass

RTR Date 25-JAN-2014 15:26 **Gross Weight** 701.190 **Lbs.** **Net Weight** 640.190 **Lbs**

Equipment Z-213-106 **Waste Matrix Code** S3900 **IDC** BN-511 PCB Organic Homogeneous Solids

Recording Id 2RTR14-00002 **Procedure Id** INST-OI-12 **Revision** 52 **Approval Level** SPM

Is Test Pattern Resolution Ok? Yes **Start Side** A **Replicate** No **OIO** No

Audio Visual Ok? Yes **Operator** JDUKE

Result Comment Waste appears to be sludge.
AK does not concur with the recommended IDC change from BN-180 to UN-00A for container 10360644 because waste is homogeneous solids with insufficient AK information to assign a legacy IDC. Instead, AK recommends an IDC of BN-511. CHD 01/28/14
Rework to change IDC per AK. ESO 01/30/14
AK concurs with the recommended IDC, BN-511, for container 10360644. No AKR or NCR is necessary. CHD 1/30/14

Package

IDC Correct Yes **Recommended IDC** BN-511 **Summary Category** S3000

Idc Change Reason Per AK

Rigid Liner Present? No **LinerType** NO LINER

Liner Punctured? N/A **Sharp Objects?** No

Liner Lid Present? No **Sharp Objects Are Protected?** Yes

Liner Lid Deformed? N/A **Layers Of Confinement** 2

Fill Factor 96

Bag Closure Method Twisted and Taped

Liquids

Liquid Present? No **Internal Container with Liquid** No

Internal Container with Liquid 0 pints **LA Candidate** No

Liquid Between Liner & Drum 0 pints **Containerized Liquid**

Containerized Liquid Amt 0 pints

Total Liquid Amount 0 pints

Other Liquids 0 pints **Comment**

Prohibited Liquids Present No **Comment**

Contents-Drum or Box

	Value	*Comment*		*Value*	*Comment*
Lead?	No		**Mercury Present?**	No	
Wet Cell Batteries?	No		**Explosives?**	No	
Prohibited Compressed Gases?	No		**PCBs Present?**	Yes - Acceptable	no liquids
Aerosol Cans?	No		**PCB Mass (lbs)**	640.19	
Non-Mixed Hazardous Waste Present?	No		**Sealed Containers Over 4L?**	No	

Non-Radionuclide Pyrophoric Materials Present? No

Waste exhibiting the characteristics of Ignitability, Corrosivity or Reactivity Present? No

Wastes Incompatible with backfill, seal and panel closure materials, container and packaging materials,shipping container or other wastes? No

Impenetrable Dense Objects? Yes - Unacceptable unable to penetrate through waste

Waste Material Items

Packaging Materials

Material Item	Quantity	Unit	Unit Wt(lbs)	Item Wt(lbs)
Drum plastic bag	2.000	EACH	1.000	2.000

Waste Items byWeight

Material Item	Quantity	Unit	Unit Wt(lbs)	Item Wt(lbs)

Waste Items by Volume

Material Item	Quantity	Unit	Unit Wt(lbs)	Item Wt(lbs)

Batch Id RTR14-00006 **Container Id** 10360644 **Analysis Id** 0000094454

Waste Parameters

Waste Parameter	Remaining Weight %	Actual Weight Lbs
Iron-based Metals/Alloys	0.000	0.000
Aluminum-based Metals/Alloys	0.000	0.000
Other metals	0.000	0.000
Other Inorganic Materials	0.000	0.000
Cellulosics	0.000	0.000
Rubber	0.000	0.000
Plastic (Waste Materials)	0.000	0.000
Inorganic matrix	0.000	0.000
Organic matrix	100.000	640.190
Soils/gravel	0.000	0.000
Steel (packaging materials)	0.000	59.000
Plastic (packaging materials)	0.000	2.000
Cellulosics Packaging	0.000	0.000

Analysis Esignature History

Esig Approval Id	User Id	Esignature Date	Comment
2684825	CHINKLE	30-JAN-2014 10:23	Batch is promoted. chd 1/30/14
2684495	SOLDHAM	30-JAN-2014 08:30	
2680825	CHINKLE	28-JAN-2014 09:12	This batch is returned for rework. AK does not concur with the recommended IDC change for containers 10453926, 10368653, 10368237, 10360644, 10357107. 10352593, 10352573. 10352409 and 10123450. CHD 01/28/14
2679608	JDUKE	25-JAN-2014 15:26	

AMWTP
Advanced Mixed Waste Treatment Project

AMWTP

RTR Analysis Report

Date: 22-Sep-2014

Time: 08:40

Batch Id RTR14-00006 **Container Id** 10352573 **Analysis Id** 0000094457

Container Type A drum, 55 Gallon Drum (17H) **Analysis Status** Pass

RTR Date 25-JAN-2014 15:53 **Gross Weight** 171.990 Lbs. **Net Weight** 110.990 Lbs

Equipment Z-213-106 **Waste Matrix Code** S5490 **IDC** BN-524 Pad 1 Cells 1 and 2 Non-PCB Debris

Recording Id 2RTR14-00002 **Procedure Id** INST-OI-12 **Revision** 52 **Approval Level** SPM

Is Test Pattern Resolution Ok? Yes **Start Side** A **Replicate** No **OIO** No

Audio Visual Ok? Yes **Operator** JDUKE

Result Comment Waste appears to be paper and rags moist
AK does not concur with the recommended IDC change from UN-000 to RF-336 for container 10352573 because waste was historically stored within Cells 1 and 2 of Pad 1 with insufficient AK information to assign a legacy IDC. Instead, AK recommends an IDC of BN-524. CHD 01/28/14
Rework to change IDC per AK. ESO 01/30/14
AK concurs with the recommended IDC, BN-524, for container 10352573. No AKR or NCR is necessary. CHD 1/30/14
Rework to correct liquid section and waste parameters. DKL 2/8/14

Package

IDC Correct Yes **Recommended IDC** BN-524 **Summary Category** S5000

Idc Change Reason Per AK

Rigid Liner Present? No **LinerType** NO LINER

Liner Punctured? N/A **Sharp Objects?** No

Liner Lid Present? No **Sharp Objects Are Protected?** Yes

Liner Lid Deformed? N/A **Layers Of Confinement** 3

Fill Factor 83

Bag Closure Method Twisted and Taped

Liquids

Liquid Present? Yes **Internal Container with Liquid** Yes

Internal Container with Liquid .07 pints **LA Candidate** No

Liquid Between Liner & Drum 0 pints **Containerized Liquid**

Total Liquid Amount .67 pints **Containerized Liquid Amt** 0 pints

Other Liquids .6 pints **Comment** 0.07 pint of liquid in aerosol can towards top of waste. 0.50 pint of liquid in bagging at center of waste. 0.10 pint of liquid in bagging at bottom of waste

Prohibited Liquids Present No **Comment**

Contents-Drum or Box

	Value	Comment		Value	Comment
Lead?	No		Mercury Present?	No	
Wet Cell Batteries?	No		Explosives?	No	
Prohibited Compressed Gases?	Yes	aerosol can	PCBs Present?	No	
Aerosol Cans?	Yes	unvented aerosol can with liquid	PCB Mass (lbs)	0	
Non-Mixed Hazardous Waste Present?	No		Sealed Containers Over 4L?	No	

Non-Radionuclide Pyrophoric Materials Present? No

Waste exhibiting the characteristics of Ignitability, Corrosivity or Reactivity Present? No

Wastes Incompatible with backfill, seal and panel closure materials, container and packaging materials,shipping container or other wastes? No

Impenetrable Dense Objects? No

Waste Material Items

Packaging Materials

Material Item	Quantity	Unit	Unit Wt(lbs)	Item Wt(lbs)
Drum plastic bag	2.000	EACH	1.000	2.000

Batch Id RTR14-00006 **Container Id** 10352573 **Analysis Id** 0000094457

Waste Items byWeight

Material Item	Quantity	Unit	Unit Wt(lbs)	Item Wt(lbs)
metal debris	1.000	EACH	1.000	1.000
plastic ppe	1.000	EACH	3.000	3.000
Plastic bag for waste	1.000	EACH	0.250	0.250
Aerosol Can	1.000	EACH	0.240	0.240

Waste Items by Volume

Material Item	Quantity	Unit	Unit Wt(lbs)	Item Wt(lbs)
Vermiculite (95 gm/liter) .125 lb/pint	15.000	PINTS	0.125	1.880
Liquids for Other Inorganics	0.670	PINTS	1.000	0.670

Waste Parameters

Waste Parameter	Remaining Weight %	Actual Weight Lbs
Iron-based Metals/Alloys	0.000	1.240
Aluminum-based Metals/Alloys	0.000	0.000
Other metals	0.000	0.000
Other Inorganic Materials	0.000	2.550
Cellulosics	100.000	103.950
Rubber	0.000	0.000
Plastic (Waste Materials)	0.000	3.250
Inorganic matrix	0.000	0.000
Organic matrix	0.000	0.000
Soils/gravel	0.000	0.000
Steel (packaging materials)	0.000	59.000
Plastic (packaging materials)	0.000	2.000
Cellulosics Packaging	0.000	0.000

Analysis Esignature History

Esig Approval Id	User Id	Esignature Date	Comment
2690329	DLEE	08-FEB-2014 14:14	
2684828	CHINKLE	30-JAN-2014 10:23	Batch is promoted. chd 1/30/14
2684490	SOLDHAM	30-JAN-2014 08:25	
2680829	CHINKLE	28-JAN-2014 09:12	This batch is returned for rework. AK does not concur with the recommended IDC change for containers 10453926, 10368653, 10368237, 10360644, 10357107, 10352593, 10352573, 10352409 and 10123450. CHD 01/28/14
2679616	JDUKE	25-JAN-2014 15:53	

Batch Id RTR14-00006 **Container Id** 10368485 **Analysis Id** 0000094458

Container Type A drum, 55 Gallon Drum (17H) **Analysis Status** Pass

RTR Date 25-JAN-2014 16:11 **Gross Weight** 141.120 **Lbs.** **Net Weight** 80.120 **Lbs**

Equipment Z-213-106 **Waste Matrix Code** S5300 **IDC** RF-337 Plastics, Teflon, Washables, PVC

Recording Id 2RTR14-00002 **Procedure Id** INST-OI-12 **Revision** 52 **Approval Level** SPM

Is Test Pattern Resolution Ok? Yes **Start Side** A **Replicate** No **OIO** No

Audio Visual Ok? Yes **Operator** JDUKE

Result Comment Waste appears to be plastic sheeting
AK concurs with the recommended IDC, RF-337, for container 10368485. No AKR or NCR is necessary. CHD 01/28/14
(rework) Removed respirator cartridge from Waste Items by Weight, re-entered 2 respirator cartridges in Waste Items by Weight from pick list. KH 18FEB14

Package

IDC Correct Yes **Recommended IDC** RF-337 **Summary Category** S5000

Idc Change Reason waste appears to be plastic sheeting

Rigid Liner Present? No **LinerType** NO LINER

Liner Punctured? N/A **Sharp Objects?** No

Liner Lid Present? No **Sharp Objects Are Protected?** Yes

Liner Lid Deformed? N/A **Layers Of Confinement** 3

Fill Factor 99

Bag Closure Method Twisted and Taped

Liquids

Liquid Present? No **Internal Container with Liquid** No

Internal Container with Liquid 0 pints **LA Candidate** No

Liquid Between Liner & Drum 0 pints **Containerized Liquid**

Total Liquid Amount 0 pints **Containerized Liquid Amt** 0 pints

Other Liquids 0 pints **Comment**

Prohibited Liquids Present No **Comment**

Contents-Drum or Box

	Value	Comment		Value	Comment
Lead?	Yes, Acceptable	lead lined tape	**Mercury Present?**	No	
Wet Cell Batteries?	No		**Explosives?**	No	
Prohibited Compressed Gases?	No		**PCBs Present?**	No	
Aerosol Cans?	No		**PCB Mass (lbs)**	0	
Non-Mixed Hazardous Waste Present?	No		**Sealed Containers Over 4L?**	No	

Non-Radionuclide Pyrophoric Materials Present? No

Waste exhibiting the characteristics of Ignitability, Corrosivity or Reactivity Present? No

Wastes Incompatible with backfill, seal and panel closure materials, container and packaging materials,shipping container or other wastes? No

Impenetrable Dense Objects? No

Waste Material Items

Packaging Materials

Material Item	Quantity	Unit	Unit Wt(lbs)	Item Wt(lbs)
Drum plastic bag	2.000	EACH	1.000	2.000

Waste Items byWeight

Material Item	Quantity	Unit	Unit Wt(lbs)	Item Wt(lbs)
metal debris	1.000	EACH	1.000	1.000
lead lined tap	1.000	EACH	0.100	0.100
Cardboard liner	1.000	EACH	4.000	4.000
Plastic bag for waste	1.000	EACH	0.250	0.250
Respirator Cartridges	2.000	EACH	0.250	0.500

Batch Id RTR14-00006 **Container Id** 10368485 **Analysis Id** 0000094458

Waste Items by Volume

Material Item	Quantity	Unit	Unit Wt(lbs)	Item Wt(lbs)
Oil-Dri (Inside 55 gal drum)	5.000	PINTS	0.420	2.100

Waste Parameters

Waste Parameter	Remaining Weight %	Actual Weight Lbs
Iron-based Metals/Alloys	0.000	1.000
Aluminum-based Metals/Alloys	0.000	0.350
Other metals	0.000	0.100
Other Inorganic Materials	0.000	2.100
Cellulosics	0.000	4.150
Rubber	0.000	0.000
Plastic (Waste Materials)	100.000	72.420
Inorganic matrix	0.000	0.000
Organic matrix	0.000	0.000
Soils/gravel	0.000	0.000
Steel (packaging materials)	0.000	59.000
Plastic (packaging materials)	0.000	2.000
Cellulosics Packaging	0.000	0.000

Analysis Esignature History

Esig Approval Id	User Id	Esignature Date	Comment
2698684	KHUGHES	18-FEB-2014 13:28	
2680823	CHINKLE	28-JAN-2014 09:12	This batch is returned for rework. AK does not concur with the recommended IDC change for containers 10453926, 10368653, 10368237, 10360644, 10357107, 10352593, 10352573, 10352409 and 10123450. CHD 01/28/14
2679617	JDUKE	25-JAN-2014 16:11	

AMWTP
Advanced Mixed Waste Treatment Project

AMWTP

RTR Analysis Report

Date: 22-Sep-2014

Time: 08:40

Batch Id RTR14-00006 **Container Id** 10357107 **Analysis Id** 0000094461

Container Type A drum, 55 Gallon Drum (17H) **Analysis Status** Pass

RTR Date 25-JAN-2014 16:57 **Gross Weight** 178.605 Lbs. **Net Weight** 118.605 Lbs

Equipment Z-213-106 **Waste Matrix Code** S5490 **IDC** RF-760 RFP Debris

Recording Id 2RTR14-00002 **Procedure Id** INST-O1-12 **Revision** 52 **Approval Level** SPM

Is Test Pattern Resolution Ok? Yes **Start Side** A **Replicate** No **OIO** No

Audio Visual Ok? Yes **Operator** JDUKE

Result Comment Waste appears to be moist paper and rags.
AK does not concur with the recommended IDC change from UN-00B to RF-336 for container 10357107 because waste is debris retrieved from Pad 1, cells 1 and 2. Instead, AK recommends an IDC of RF-760. CHD 01/28/14
Rework to change IDC per AK. ESO 01/30/14
AK concurs with the recommended IDC, RF-760, for container 10357107. No AKR or NCR is necessary. CHD 1/30/14

Package

IDC Correct Yes **Recommended IDC** RF-760 **Summary Category** S5000

Idc Change Reason Per AK

Rigid Liner Present? No **LinerType** NO LINER

Liner Punctured? N/A **Sharp Objects?** No

Liner Lid Present? No **Sharp Objects Are Protected?** Yes

Liner Lid Deformed? N/A **Layers Of Confinement** 4

Fill Factor 85

Bag Closure Method Twisted and Taped

Liquids

Liquid Present? Yes **Internal Container with Liquid** No

Internal Container with Liquid 0 pints **LA Candidate** No

Liquid Between Liner & Drum 0 pints **Containerized Liquid**

Containerized Liquid Amt 0 pints

Total Liquid Amount .65 pints

Other Liquids .65 pints **Comment** .5 pint of liquid in bagging at center of drum. .15 pints of liquid in bagging at bottom of waste

Prohibited Liquids Present No **Comment** <1%

Contents-Drum or Box

	Value	Comment		Value	Comment
Lead?	No		Mercury Present?	No	
Wet Cell Batteries?	No		Explosives?	No	
Prohibited Compressed Gases?	No		PCBs Present?	No	
Aerosol Cans?	No		PCB Mass (lbs)	0	
Non-Mixed Hazardous Waste Present?	No		Sealed Containers Over 4L?	Yes	buckets

Non-Radionuclide Pyrophoric Materials Present? No

Waste exhibiting the characteristics of Ignitability, Corrosivity or Reactivity Present? No

Wastes Incompatible with backfill, seal and panel closure materials, container and packaging materials,shipping container or other wastes? No

Impenetrable Dense Objects? No

Waste Material Items

Packaging Materials

Material Item	Quantity	Unit	Unit Wt(lbs)	Item Wt(lbs)
Drum plastic bag	1.000	EACH	1.000	1.000

Waste Items byWeight

Material Item	Quantity	Unit	Unit Wt(lbs)	Item Wt(lbs)
raschig rings	1.000	EACH	7.000	7.000
plastic buckets	2.000	EACH	0.750	1.500
metal debris	1.000	EACH	4.000	4.000
Plastic bag for waste	2.000	EACH	0.250	0.500

Batch Id RTR14-00006 **Container Id** 10357107 **Analysis Id** 0000094461

Waste Items by Volume

Material Item	Quantity	Unit	Unit Wt(lbs)	Item Wt(lbs)
Vermiculite (95 gm/liter) .125 lb/pint	10.000	PINTS	0.125	1.250
Liquids for Other Inorganics	0.650	PINTS	1.000	0.650

Waste Parameters

Waste Parameter	Remaining Weight %	Actual Weight Lbs
Iron-based Metals/Alloys	0.000	4.000
Aluminum-based Metals/Alloys	0.000	0.000
Other metals	0.000	0.000
Other Inorganic Materials	0.000	8.900
Cellulosics	100.000	103.705
Rubber	0.000	0.000
Plastic (Waste Materials)	0.000	2.000
Inorganic matrix	0.000	0.000
Organic matrix	0.000	0.000
Soils/gravel	0.000	0.000
Steel (packaging materials)	0.000	59.000
Plastic (packaging materials)	0.000	1.000
Cellulosics Packaging	0.000	0.000

Analysis Esignature History

Esig Approval Id	User Id	Esignature Date	Comment
2684826	CHINKLE	30-JAN-2014 10:23	Batch is promoted. chd 1/30/14
2684493	SOLDHAM	30-JAN-2014 08:28	
2680827	CHINKLE	28-JAN-2014 09:12	This batch is returned for rework. AK does not concur with the recommended IDC change for containers 10453926, 10368653, 10368237, 10360644, 10357107, 10352593, 10352573, 10352409 and 10123450. CHD 01/28/14
2679626	JDUKE	25-JAN-2014 16:57	

AMWTP
Advanced Mixed Waste Treatment Project

AMWTP

RTR Analysis Report

Date: 22-Sep-2014
Time: 08:40

Batch Id RTR14-00006 **Container Id** 10368653 **Analysis Id** 0000094462

Container Type A drum, 55 Gallon Drum (17H) **Analysis Status** Pass

RTR Date 25-JAN-2014 17:10 **Gross Weight** 469.665 **Lbs.** **Net Weight** 409.665 **Lbs**

Equipment Z-213-106 **Waste Matrix Code** S5490 **IDC** RF-960 Concrete, Asphalt, etc.

Recording Id 2RTR14-00002 **Procedure Id** INST-OI-12 **Revision** 52 **Approval Level** SPM

Is Test Pattern Resolution Ok? Yes **Start Side** A **Replicate** No **OIO** No

Audio Visual Ok? Yes **Operator** JDUKE

Result Comment Waste appears to be sludge
AK does not concur with the recommended IDC change from UN-000 to UN-00A for container 10368653 because RTR SME review indicates this waste appears to be concrete, asphalt.. Instead, per RTR SME review, AK recommends IDC of RF-960. CHD 01/28/14
Rework to change IDC per AK. ESO 01/30/14
AK concurs with the recommended IDC, RF-960, per RTR SME review, for container 10368653. No AKR or NCR is necessary. CHD 1/30/14
Rework to correct waste description. Please disregard the pervious waste discription of sludge. The remaining waste appears to be concrete and asphalt. Reworked PCBs section and waste parameters also. DKL 2/8/14

Package

IDC Correct Yes **Recommended IDC** RF-960 **Summary Category** S5000

Idc Change Reason Per AK

Rigid Liner Present? No **LinerType** NO LINER

Liner Punctured? N/A **Sharp Objects?** No

Liner Lid Present? No **Sharp Objects Are Protected?** Yes

Liner Lid Deformed? N/A **Layers Of Confinement** 1

Fill Factor 66

Bag Closure Method Twisted and Taped

Liquids

Liquid Present? No **Internal Container with Liquid** No

Internal Container with Liquid 0 pints **LA Candidate** No

Liquid Between Liner & Drum 0 pints **Containerized Liquid**

Total Liquid Amount 0 pints **Containerized Liquid Amt** 0 pints

Other Liquids 0 pints **Comment**

Prohibited Liquids Present No **Comment**

Contents-Drum or Box

	Value	Comment		Value	Comment
Lead?	No		**Mercury Present?**	No	
Wet Cell Batteries?	No		**Explosives?**	No	
Prohibited Compressed Gases?	No		**PCBs Present?**	No	
Aerosol Cans?	No		**PCB Mass (lbs)**	0	
Non-Mixed Hazardous Waste Present?	No		**Sealed Containers Over 4L?**	No	

Non-Radionuclide Pyrophoric Materials Present? No

Waste exhibiting the characteristics of Ignitability, Corrosivity or Reactivity Present? No

Wastes Incompatible with backfill, seal and panel closure materials, container and packaging materials,shipping container or other wastes? No

Impenetrable Dense Objects? Yes - Unacceptable unable to penetrate through waste

Waste Material Items

Packaging Materials

Material Item	Quantity	Unit	Unit Wt(lbs)	Item Wt(lbs)
Drum plastic bag	1.000	EACH	1.000	1.000

Waste Items byWeight

Material Item	Quantity	Unit	Unit Wt(lbs)	Item Wt(lbs)
Binder for asphalt	1.000	EACH	10.000	10.000
Cardboard liner	1.000	EACH	4.000	4.000

Batch Id RTR14-00006 **Container Id** 10368653 **Analysis Id** 0000094462

Waste Items by Volume

Material Item	Quantity	Unit	Unit Wt(lbs)	Item Wt(lbs)
Oil-Dri (Inside 55 gal drum)	3.500	PINTS	0.420	1.470

Waste Parameters

Waste Parameter	Remaining Weight %	Actual Weight Lbs
Iron-based Metals/Alloys	0.000	0.000
Aluminum-based Metals/Alloys	0.000	0.000
Other metals	0.000	0.000
Other Inorganic Materials	100.000	395.665
Cellulosics	0.000	4.000
Rubber	0.000	0.000
Plastic (Waste Materials)	0.000	0.000
Inorganic matrix	0.000	0.000
Organic matrix	0.000	10.000
Soils/gravel	0.000	0.000
Steel (packaging materials)	0.000	59.000
Plastic (packaging materials)	0.000	1.000
Cellulosics Packaging	0.000	0.000

Analysis Esignature History

Esig Approval Id	User Id	Esignature Date	Comment
2690343	DLEE	08-FEB-2014 14:44	
2684823	CHINKLE	30-JAN-2014 10:23	Batch is promoted. chd 1/30/14
2684504	SOLDHAM	30-JAN-2014 08:33	
2680822	CHINKLE	28-JAN-2014 09:12	This batch is returned for rework. AK does not concur with the recommended IDC change for containers 10453926, 10368653, 10368237, 10360644, 10357107, 10352593, 10352573, 10352409 and 10123450. CHD 01/28/14
2679629	JDUKE	25-JAN-2014 17:10	

Batch Id RTR14-00006 **Container Id** 10453926 **Analysis Id** 0000094464

Container Type A drum, 55 Gallon Drum (17H) **Analysis Status** Pass

RTR Date 25-JAN-2014 17:34 **Gross Weight** 504.945 **Lbs.** **Net Weight** 443.945 **Lbs**

Equipment Z-213-106 **Waste Matrix Code** S3900 **IDC** BN-511 PCB Organic Homogeneous Solids

Recording Id 2RTR14-00002 **Procedure Id** INST-OI-12 **Revision** 52 **Approval Level** SPM

Is Test Pattern Resolution Ok? Yes **Start Side** A **Replicate** No **OIO** No

Audio Visual Ok? Yes **Operator** JDUKE

Result Comment Waste appears to be sludge
AK does not concur with the recommended IDC change from UN-000 to UN-00A for container 10453926 because waste is homogeneous solids with insufficient AK information to assign a legacy IDC. Instead, AK recommends an IDC of BN-511. CHD 01/28/14
Rework to change IDC per AK. ESO 01/30/14
AK concurs with the recommended IDC, BN-511, for container 10453926. No AKR or NCR is necessary. CHD 1/30/14

Package

IDC Correct Yes **Recommended IDC** BN-511 **Summary Category** S3000

Idc Change Reason Per AK

Rigid Liner Present? No **LinerType** NO LINER

Liner Punctured? N/A **Sharp Objects?** No

Liner Lid Present? No **Sharp Objects Are Protected?** Yes

Liner Lid Deformed? N/A **Layers Of Confinement** 2

Fill Factor 97

Bag Closure Method Twisted and Taped

Liquids

Liquid Present? Yes **Internal Container with Liquid** No

Internal Container with Liquid 0 pints **LA Candidate** No

Liquid Between Liner & Drum 0 pints **Containerized Liquid**

Total Liquid Amount .2 pints **Containerized Liquid Amt** 0 pints

Other Liquids .2 pints **Comment** .2 pints of liquid located at center chine

Prohibited Liquids Present Yes **Comment** pcb's w/liquid

Contents-Drum or Box

	Value	Comment		Value	Comment
Lead?	No		**Mercury Present?**	No	
Wet Cell Batteries?	No		**Explosives?**	No	
Prohibited Compressed Gases?	No		**PCBs Present?**	Yes - Prohibited	w/liquids
Aerosol Cans?	No		**PCB Mass (lbs)**	443.95	
Non-Mixed Hazardous Waste Present?	No		**Sealed Containers Over 4L?**	No	

Non-Radionuclide Pyrophoric Materials Present? No

Waste exhibiting the characteristics of Ignitability, Corrosivity or Reactivity Present? No

Wastes Incompatible with backfill, seal and panel closure materials, container and packaging materials,shipping container or other wastes? No

Impenetrable Dense Objects? Yes - Unacceptable unable to penetrate though waste

Waste Material Items

Packaging Materials

Material Item	Quantity	Unit	Unit Wt(lbs)	Item Wt(lbs)
Drum plastic bag	2.000	EACH	1.000	2.000

Waste Items byWeight

Material Item	Quantity	Unit	Unit Wt(lbs)	Item Wt(lbs)

Waste Items by Volume

Material Item	Quantity	Unit	Unit Wt(lbs)	Item Wt(lbs)
Liquids for Organic Matrix	0.200	PINTS	1.000	0.200

Batch Id RTR14-00006 **Container Id** 10453926 **Analysis Id** 0000094464

Waste Parameters

Waste Parameter	Remaining Weight %	Actual Weight Lbs
Iron-based Metals/Alloys	0.000	0.000
Aluminum-based Metals/Alloys	0.000	0.000
Other metals	0.000	0.000
Other Inorganic Materials	0.000	0.000
Cellulosics	0.000	0.000
Rubber	0.000	0.000
Plastic (Waste Materials)	0.000	0.000
Inorganic matrix	0.000	0.000
Organic matrix	100.000	443.945
Soils/gravel	0.000	0.000
Steel (packaging materials)	0.000	59.000
Plastic (packaging materials)	0.000	2.000
Cellulosics Packaging	0.000	0.000

Analysis Esignature History

Esig Approval Id	User Id	Esignature Date	Comment
2684822	CHINKLE	30-JAN-2014 10:23	Batch is promoted. chd 1/30/14
2684506	SOLDHAM	30-JAN-2014 08:34	
2680821	CHINKLE	28-JAN-2014 09:12	This batch is returned for rework. AK does not concur with the recommended IDC change for containers 10453926, 10368653, 10368237, 10360644, 10357107, 10352593, 10352573, 10352409 and 10123450. CHD 01/28/14
2679633	JDUKE	25-JAN-2014 17:34	

Batch Id RTR14-00006 **Container Id** 10352593 **Analysis Id** 0000094466

Container Type A drum, 55 Gallon Drum (17H) **Analysis Status** Pass

RTR Date 25-JAN-2014 17:55 **Gross Weight** 163.170 **Lbs.** **Net Weight** 102.170 **Lbs.**

Equipment Z-213-106 **Waste Matrix Code** S5490 **IDC** RF-760 RFP Debris

Recording Id 2RTR14-00002 **Procedure Id** INST-OI-12 **Revision** 52 **Approval Level** SPM

Is Test Pattern Resolution Ok? Yes **Start Side** A **Replicate** No **OIO** No

Audio Visual Ok? Yes **Operator** JDUKE

Result Comment Waste appears to be metal debris and wirring.
AK does not concur with the recommended IDC change from UN-00B to RF-480 for container 10352593 because waste is debris retrieved from Pad 1, cells 1 and 2. Instead, AK recommends an IDC of RF-760. CHD 01/28/14
Rework to change IDC per AK. ESO 01/30/14
AK concurs with the recommended IDC, RF-760, for container 10352593. No AKR or NCR is necessary. CHD 1/30/14
Rework to correct PCBs section and waste parameters. DKL 2/8/14

Package

IDC Correct Yes **Recommended IDC** RF-760 **Summary Category** S5000

Idc Change Reason Per AK

Rigid Liner Present? No **LinerType** NO LINER

Liner Punctured? N/A **Sharp Objects?** No

Liner Lid Present? No **Sharp Objects Are Protected?** Yes

Liner Lid Deformed? N/A **Layers Of Confinement** 3

Fill Factor 85

Bag Closure Method Twisted and Taped

Liquids

Liquid Present? No **Internal Container with Liquid** No

Internal Container with Liquid 0 pints **LA Candidate** No

Liquid Between Liner & Drum 0 pints **Containerized Liquid**

Total Liquid Amount 0 pints **Containerized Liquid Amt** 0 pints

Other Liquids 0 pints **Comment**

Prohibited Liquids Present No **Comment**

Contents-Drum or Box

	Value	Comment		Value	Comment
Lead?	No		**Mercury Present?**	No	
Wet Cell Batteries?	No		**Explosives?**	No	
Prohibited Compressed Gases?	No		**PCBs Present?**	No	
Aerosol Cans?	No		**PCB Mass (lbs)**	0	
Non-Mixed Hazardous Waste Present?	No		**Sealed Containers Over 4L?**	No	

Non-Radionuclide Pyrophoric Materials Present? No

Waste exhibiting the characteristics of Ignitability, Corrosivity or Reactivity Present? No

Wastes Incompatible with backfill, seal and panel closure materials, container and packaging materials,shipping container or other wastes? No

Impenetrable Dense Objects? No

Waste Material Items

Packaging Materials

Material Item	Quantity	Unit	Unit Wt(lbs)	Item Wt(lbs)
Drum plastic bag	2.000	EACH	1.000	2.000

Waste Items byWeight

Material Item	Quantity	Unit	Unit Wt(lbs)	Item Wt(lbs)
Fiber pack	2.000	EACH	6.000	12.000
Plastic bag for waste	1.000	EACH	0.250	0.250

Waste Items by Volume

Material Item	Quantity	Unit	Unit Wt(lbs)	Item Wt(lbs)
Vermiculite (95 gm/liter) .125 lb/pint	50.000	PINTS	0.125	6.250

Batch Id RTR14-00006 **Container Id** 10352593 **Analysis Id** 0000094466

Waste Parameters

Waste Parameter	Remaining Weight %	Actual Weight Lbs
Iron-based Metals/Alloys	100.000	83.670
Aluminum-based Metals/Alloys	0.000	0.000
Other metals	0.000	0.000
Other Inorganic Materials	0.000	6.250
Cellulosics	0.000	12.000
Rubber	0.000	0.000
Plastic (Waste Materials)	0.000	0.250
Inorganic matrix	0.000	0.000
Organic matrix	0.000	0.000
Soils/gravel	0.000	0.000
Steel (packaging materials)	0.000	59.000
Plastic (packaging materials)	0.000	2.000
Cellulosics Packaging	0.000	0.000

Analysis Esignature History

Esig Approval Id	User Id	Esignature Date	Comment
2690333	DLEE	08-FEB-2014 14:17	
2684827	CHINKLE	30-JAN-2014 10:23	Batch is promoted. chd 1/30/14
2684491	SOLDHAM	30-JAN-2014 08:26	
2680828	CHINKLE	28-JAN-2014 09:12	This batch is returned for rework. AK does not concur with the recommended IDC change for containers 10453926, 10368653, 10368237, 10360644, 10357107, 10352593, 10352573, 10352409 and 10123450. CHD 01/28/14
2679638	JDUKE	25-JAN-2014 17:55	

Batch Id RTR14-00006 **Container Id** 10352409 **Analysis Id** 0000094468

Container Type A drum, 55 Gallon Drum (17H) **Analysis Status** Pass

RTR Date 26-JAN-2014 09:52 **Gross Weight** 180.810 **Lbs.** **Net Weight** 119.810 **Lbs**

Equipment Z-213-106 **Waste Matrix Code** S5490 **IDC** RF-760 RFP Debris

Recording Id 2RTR14-00002 **Procedure Id** INST-OI-12 **Revision** 52 **Approval Level** SPM

Is Test Pattern Resolution Ok? Yes **Start Side** A **Replicate** No **OIO** No

Audio Visual Ok? Yes **Operator** CBEEBE

Result Comment The waste appears to be primarily cellulosics in the form of paper and rags, towels, wipes, cardboard, ect.. Recommended IDC RF-330 due to information found on the historical data for this container number in WTS indacates Historical ID as IDRF001533101. cb
AK does not concur with the recommended IDC change from UN-000 to RF-330 for container 10352409 because waste is debris retrieved from Pad 1, cells 1 and 2. Instead, AK recommends an IDC of RF-760. CHD 01/28/14
Rework to change IDC per AK. ESO 01/30/14
AK concurs with the recommended IDC, RF-760, for container 10352409. No AKR or NCR is necessary. CHD 1/30/14
Rework to correct liquid amount location. DKL 2/8/14

Package

IDC Correct Yes **Recommended IDC** RF-760 **Summary Category** S5000

Idc Change Reason Per AK

Rigid Liner Present? No **LinerType** NO LINER

Liner Punctured? N/A **Sharp Objects?** Yes

Liner Lid Present? No **Sharp Objects Are Protected?** Yes

Liner Lid Deformed? N/A **Layers Of Confinement** 3

Fill Factor 85

Bag Closure Method Twisted and Taped

Liquids

Liquid Present? Yes **Internal Container with Liquid** Yes

Internal Container with Liquid 2.03 pints **LA Candidate** No

Liquid Between Liner & Drum 0 pints **Containerized Liquid**

Total Liquid Amount 2.04 pints **Containerized Liquid Amt** 0 pints

Other Liquids .01 pints **Comment** Approx. 2 pts. of liquid in a poly bottle near the top of the waste , 1Tbs. of liquid in a aersol can at the bottom of the waste, and approx. 1 tsp. of liquid in the bagging.

Prohibited Liquids Present Yes **Comment** Internal container with liquid > 60 ml.

Contents-Drum or Box

	Value	Comment		Value	Comment
Lead?	Yes, Acceptable	Leaded tape at the top of the waste	**Mercury Present?**	No	
Wet Cell Batteries?	No		**Explosives?**	No	
Prohibited Compressed Gases?	Yes	Aersol cans one with liquid.	**PCBs Present?**	No	
Aerosol Cans?	Yes	2 aersol cans at the bottom of the waste	**PCB Mass (lbs)**	0	
Non-Mixed Hazardous Waste Present?	No		**Sealed Containers Over 4L?**	No	

Non-Radionuclide Pyrophoric Materials Present? No

Waste exhibiting the characteristics of Ignitability, Corrosivity or Reactivity Present? No

Wastes Incompatible with backfill, seal and panel closure materials, container and packaging materials,shipping container or other wastes? No

Impenetrable Dense Objects? No

Waste Material Items

Packaging Materials

Material Item	Quantity	Unit	Unit Wt(lbs)	Item Wt(lbs)
Drum plastic bag	2.000	EACH	1.000	2.000

Batch Id RTR14-00006 **Container Id** 10352409 **Analysis Id** 0000094468

Waste Items byWeight

Material Item	Quantity	Unit	Unit Wt(lbs)	Item Wt(lbs)
Respirator filters	6.000	EACH	0.250	1.500
Leaded tape	1.000	EACH	0.250	0.250
Scrap metal, tools,wire, covers, ect..	1.000	EACH	6.000	6.000
Plastic,tool case, bagging, ect..	1.000	EACH	5.000	5.000
Plastic bag for waste	1.000	EACH	0.250	0.250
Poly bottles (1 gal)	1.000	EACH	1.000	1.000
Aerosol Can	2.000	EACH	0.240	0.480
Anti-C Gloves(Pair)	1.000	EACH	0.250	0.250

Waste Items by Volume

Material Item	Quantity	Unit	Unit Wt(lbs)	Item Wt(lbs)
Oil-Dri (Inside 55 gal drum)	4.000	PINTS	0.420	1.680
Liquids for Other Inorganics	2.040	PINTS	1.000	2.040

Waste Parameters

Waste Parameter	Remaining Weight %	Actual Weight Lbs
Iron-based Metals/Alloys	0.000	6.480
Aluminum-based Metals/Alloys	0.000	1.050
Other metals	0.000	0.250
Other Inorganic Materials	0.000	3.720
Cellulosics	100.000	101.810
Rubber	0.000	0.250
Plastic (Waste Materials)	0.000	6.250
Inorganic matrix	0.000	0.000
Organic matrix	0.000	0.000
Soils/gravel	0.000	0.000
Steel (packaging materials)	0.000	59.000
Plastic (packaging materials)	0.000	2.000
Cellulosics Packaging	0.000	0.000

Analysis Esignature History

Esig Approval Id	User Id	Esignature Date	Comment
2690325	DLEE	08-FEB-2014 14:06	
2684829	CHINKLE	30-JAN-2014 10:23	Batch is promoted. chd 1/30/14
2684488	SOLDHAM	30-JAN-2014 08:24	
2680830	CHINKLE	28-JAN-2014 09:12	This batch is returned for rework. AK does not concur with the recommended IDC change for containers 10453926, 10368653, 10368237, 10360644, 10357107, 10352593, 10352573, 10352409 and 10123450. CHD 01/28/14
2679944	CBEEBE	26-JAN-2014 17:56	Corrected Recording ID. cb.
2679749	CBEEBE	26-JAN-2014 09:52	

Batch Id RTR14-00006 **Container Id** 10359172 **Analysis Id** 0000094472

Container Type A drum, 55 Gallon Drum (17H) **Analysis Status** Pass

RTR Date 26-JAN-2014 10:40 **Gross Weight** 249.165 **Lbs.** **Net Weight** 188.165 **Lbs**

Equipment Z-213-106 **Waste Matrix Code** S5490 **IDC** RF-760 RFP Debris

Recording Id 2RTR14-00002 **Procedure Id** INST-OI-12 **Revision** 52 **Approval Level** SPM

Is Test Pattern Resolution Ok? Yes **Start Side** A **Replicate** No **OIO** No

Audio Visual Ok? Yes **Operator** CBEEBE

Result Comment The remaining waste appears to be scrap metal, nuts, bolts, sheet metal, lead sheeting, ect.. Recommended IDC RF-760 due to information found on the historical screen for this container number. Operator called it a RF-480 on recording but changed to RF-760 due to drum retrieved from pad 1. cb.
AK concurs with the recommended IDC, RF-760, for container 10359172. No AKR or NCR is necessary. CHD 01/28/14
Rework to correct the PCBs question and the waste parameters. DKL 2/8/14

Package

IDC Correct Yes **Recommended IDC** RF-760 **Summary Category** S5000

Idc Change Reason Waste apprars to be primarily scrap metal,nuts, bolts,sheet metal, lead sheeting, ect..

Rigid Liner Present? No **LinerType** NO LINER

Liner Punctured? N/A **Sharp Objects?** No

Liner Lid Present? No **Sharp Objects Are Protected?** Yes

Liner Lid Deformed? N/A **Layers Of Confinement** 3

Fill Factor 85

Bag Closure Method Twisted and Taped

Liquids

Liquid Present? No **Internal Container with Liquid** No

Internal Container with Liquid 0 pints **LA Candidate** No

Liquid Between Liner & Drum 0 pints **Containerized Liquid**

Total Liquid Amount 0 pints **Containerized Liquid Amt** 0 pints

Other Liquids 0 pints **Comment**

Prohibited Liquids Present No **Comment**

Contents-Drum or Box

	Value	Comment		Value	Comment
Lead?	Yes, Acceptable	Lead sheeting near the top of the waste.	**Mercury Present?**	No	
Wet Cell Batteries?	No		**Explosives?**	No	
Prohibited Compressed Gases?	No		**PCBs Present?**	Yes - Prohibited	large capacitor, no liquids.
Aerosol Cans?	No		**PCB Mass (lbs)**	188.17	
Non-Mixed Hazardous Waste Present?	No		**Sealed Containers Over 4L?**	No	

Non-Radionuclide Pyrophoric Materials Present? No

Waste exhibiting the characteristics of Ignitability, Corrosivity or Reactivity Present? No

Wastes Incompatible with backfill, seal and panel closure materials, container and packaging materials,shipping container or other wastes? No

Impenetrable Dense Objects? No

Waste Material Items

Packaging Materials

Material Item	Quantity	Unit	Unit Wt(lbs)	Item Wt(lbs)
Drum plastic bag	2.000	EACH	1.000	2.000

Waste Items byWeight

Material Item	Quantity	Unit	Unit Wt(lbs)	Item Wt(lbs)
Large capacitor	1.000	EACH	5.000	5.000
Plastic, PPE, bagging, ect..	1.000	EACH	3.000	3.000
Lead sheeting	1.000	EACH	75.000	75.000
Cellulosics, wood, towels, wipes,ect..	1.000	EACH	5.000	5.000
Plastic bag for waste	1.000	EACH	0.250	0.250

Batch Id RTR14-00006 **Container Id** 10359172 **Analysis Id** 0000094472

Waste Items by Volume

Material Item	Quantity	Unit	Unit Wt(lbs)	Item Wt(lbs)

Waste Parameters

Waste Parameter	Remaining Weight %	Actual Weight Lbs
Iron-based Metals/Alloys	100.000	99.915
Aluminum-based Metals/Alloys	0.000	0.000
Other metals	0.000	80.000
Other Inorganic Materials	0.000	0.000
Cellulosics	0.000	5.000
Rubber	0.000	0.000
Plastic (Waste Materials)	0.000	3.250
Inorganic matrix	0.000	0.000
Organic matrix	0.000	0.000
Soils/gravel	0.000	0.000
Steel (packaging materials)	0.000	59.000
Plastic (packaging materials)	0.000	2.000
Cellulosics Packaging	0.000	0.000

Analysis Esignature History

Esig Approval Id	User Id	Esignature Date	Comment
2690340	DLEE	08-FEB-2014 14:34	
2680826	CHINKLE	28-JAN-2014 09:12	This batch is returned for rework. AK does not concur with the recommended IDC change for containers 10453926, 10368653, 10368237, 10360644, 10357107, 10352593, 10352573, 10352409 and 10123450. CHD 01/28/14
2679767	CBEEBE	26-JAN-2014 10:40	

AMWTP
Advanced Mixed Waste Treatment Project

AMWTP

RTR Analysis Report

Date: 22-Sep-2014

Time: 08:40

Batch Id RTR14-00006 **Container Id** 10368237 **Analysis Id** 0000094473

Container Type A drum, 55 Gallon Drum (17H) **Analysis Status** Pass

RTR Date 26-JAN-2014 11:01 **Gross Weight** 180.810 Lbs. **Net Weight** 119.810 Lbs.

Equipment Z-213-106 **Waste Matrix Code** S5490 **IDC** RF-760 RFP Debris

Recording Id 2RTR14-00002 **Procedure Id** INST-OI-12 **Revision** 52 **Approval Level** SPM

Is Test Pattern Resolution Ok? Yes **Start Side** A **Replicate** No **OIO** No

Audio Visual Ok? Yes **Operator** CBEEBE

Result Comment Waste appears to be primarily plastic bagging and plastic sheeting. cb. Recommended IDC change to UN-00B after first E-Sign. cb.
AK does not concur with the recommended IDC change from UN-000 to UN-00B for container 10368237 because waste is debris retrieved from Pad 1, cells 1 and 2. Instead, AK recommends an IDC of RF-760. CHD 01/28/14
Rework to change IDC per AK. ESO 01/30/14
AK concurs with the recommended IDCRF-760, for container 10368237. No AKR or NCR is necessary. CHD 1/30/14

Package

IDC Correct Yes **Recommended IDC** RF-760 **Summary Category** S5000

Idc Change Reason Per AK

Rigid Liner Present? No **LinerType** NO LINER

Liner Punctured? N/A **Sharp Objects?** No

Liner Lid Present? No **Sharp Objects Are Protected?** Yes

Liner Lid Deformed? N/A **Layers Of Confinement** 3

Fill Factor 95

Bag Closure Method Twisted and Taped

Liquids

Liquid Present? No **Internal Container with Liquid** No

Internal Container with Liquid 0 pints **LA Candidate** No

Liquid Between Liner & Drum 0 pints **Containerized Liquid**

Total Liquid Amount 0 pints **Containerized Liquid Amt** 0 pints

Other Liquids 0 pints **Comment**

Prohibited Liquids Present No **Comment**

Contents-Drum or Box

	Value	Comment		Value	Comment
Lead?	Yes, Acceptable	Small piece of leaded tape	**Mercury Present?**	No	
Wet Cell Batteries?	No		**Explosives?**	No	
Prohibited Compressed Gases?	No		**PCBs Present?**	No	
Aerosol Cans?	No		**PCB Mass (lbs)**	0	
Non-Mixed Hazardous Waste Present?	No		**Sealed Containers Over 4L?**	No	

Non-Radionuclide Pyrophoric Materials Present? No

Waste exhibiting the characteristics of Ignitability, Corrosivity or Reactivity Present? No

Wastes Incompatible with backfill, seal and panel closure materials, container and packaging materials,shipping container or other wastes? No

Impenetrable Dense Objects? No

Waste Material Items

Packaging Materials

Material Item	Quantity	Unit	Unit Wt(lbs)	Item Wt(lbs)
Drum plastic bag	2.000	EACH	1.000	2.000

Waste Items byWeight

Material Item	Quantity	Unit	Unit Wt(lbs)	Item Wt(lbs)
Leaded tape	1.000	EACH	0.250	0.250
Cardboard liner	1.000	EACH	4.000	4.000
Plastic bag for waste	1.000	EACH	0.250	0.250

Waste Items by Volume

Material Item	Quantity	Unit	Unit Wt(lbs)	Item Wt(lbs)
Oil-Dri (Inside 55 gal drum)	8.000	PINTS	0.420	3.360

Batch Id RTR14-00006 **Container Id** 10368237 **Analysis Id** 0000094473

Waste Parameters

Waste Parameter	Remaining Weight %	Actual Weight Lbs
Iron-based Metals/Alloys	0.000	0.000
Aluminum-based Metals/Alloys	0.000	0.000
Other metals	0.000	0.250
Other Inorganic Materials	0.000	3.360
Cellulosics	0.000	4.000
Rubber	0.000	0.000
Plastic (Waste Materials)	100.000	112.200
Inorganic matrix	0.000	0.000
Organic matrix	0.000	0.000
Soils/gravel	0.000	0.000
Steel (packaging materials)	0.000	59.000
Plastic (packaging materials)	0.000	2.000
Cellulosics Packaging	0.000	0.000

Analysis Esignature History

Esig Approval Id	User Id	Esignature Date	Comment
2684824	CHINKLE	30-JAN-2014 10:23	Batch is promoted. chd 1/30/14
2684498	SOLDHAM	30-JAN-2014 08:31	
2680824	CHINKLE	28-JAN-2014 09:12	This batch is returned for rework. AK does not concur with the recommended IDC change for containers 10453926, 10368653, 10368237, 10360644, 10357107, 10352593, 10352573, 10352409 and 10123450. CHD 01/28/14
2679783	CBEEBE	26-JAN-2014 11:31	
2679777	CBEEBE	26-JAN-2014 11:01	

Batch Id RTR14-00006 **Container Id** 10011625 **Analysis Id** 0000094476

Container Type 001 drum, 55 Gallon (17C) **Analysis Status** Pass

RTR Date 26-JAN-2014 12:50 **Gross Weight** 595.350 Lbs. **Net Weight** 536.350 **Lbs**

Equipment Z-213-106 **Waste Matrix Code** S5000 **IDC** ID-155 TRU Scrap

Recording Id 2RTR14-00002 **Procedure Id** INST-OI-12 **Revision** 52 **Approval Level** SPM

Is Test Pattern Resolution Ok? Yes **Start Side** A **Replicate** No **OIO** No

Audio Visual Ok? Yes **Operator** CBEEBE

Result Comment The remaining waste appears to be scrap metal in the form of a dense metal container. cb.

Package

IDC Correct Yes **Recommended IDC** **Summary Category** S5000

Idc Change Reason

Rigid Liner Present? No **LinerType** NO LINER

Liner Punctured? N/A **Sharp Objects?** No

Liner Lid Present? No **Sharp Objects Are Protected?** Yes

Liner Lid Deformed? N/A **Layers Of Confinement** 1

Fill Factor 100

Bag Closure Method No Bags

Liquids

Liquid Present? No **Internal Container with Liquid** No

Internal Container with Liquid 0 pints **LA Candidate** No

Liquid Between Liner & Drum 0 pints **Containerized Liquid**

Total Liquid Amount 0 pints **Containerized Liquid Amt** 0 pints

Other Liquids 0 pints **Comment**

Prohibited Liquids Present No **Comment**

Contents-Drum or Box

	Value	Comment		Value	Comment
Lead?	No		**Mercury Present?**	No	
Wet Cell Batteries?	No		**Explosives?**	No	
Prohibited Compressed Gases?	No		**PCBs Present?**	No	
Aerosol Cans?	No		**PCB Mass (lbs)**	0	
Non-Mixed Hazardous Waste Present?	No		**Sealed Containers Over 4L?**	Yes	Large sealed metal container

Non-Radionuclide Pyrophoric Materials Present? No

Waste exhibiting the characteristics of Ignitability, Corrosivity or Reactivity Present? No

Wastes Incompatible with backfill, seal and panel closure materials, container and packaging materials,shipping container or other wastes? No

Impenetrable Dense Objects? Yes - Unacceptable dense metal container.

Waste Material Items

Packaging Materials

Material Item	Quantity	Unit	Unit Wt(lbs)	Item Wt(lbs)

Waste Items byWeight

Material Item	Quantity	Unit	Unit Wt(lbs)	Item Wt(lbs)
Dense metal container	1.000	EACH	200.000	200.000
Plywood	1.000	EACH	85.000	85.000

Waste Items by Volume

Material Item	Quantity	Unit	Unit Wt(lbs)	Item Wt(lbs)

Batch Id RTR14-00006 **Container Id** 10011625 **Analysis Id** 0000094476

Waste Parameters

Waste Parameter	Remaining Weight %	Actual Weight Lbs
Iron-based Metals/Alloys	100.000	451.350
Aluminum-based Metals/Alloys	0.000	0.000
Other metals	0.000	0.000
Other Inorganic Materials	0.000	0.000
Cellulosics	0.000	85.000
Rubber	0.000	0.000
Plastic (Waste Materials)	0.000	0.000
Inorganic matrix	0.000	0.000
Organic matrix	0.000	0.000
Soils/gravel	0.000	0.000
Steel (packaging materials)	0.000	59.000
Plastic (packaging materials)	0.000	0.000
Cellulosics Packaging	0.000	0.000

Analysis Esignature History

Esig Approval Id	User Id	Esignature Date	Comment
2679820	CBEEBE	26-JAN-2014 12:50	

Batch Id RTR14-00006 **Container Id** 10087577 **Analysis Id** 0000094477

Container Type A drum, 55 Gallon Drum (17H) **Analysis Status** Pass

RTR Date 26-JAN-2014 13:25 **Gross Weight** 515.970 **Lbs.** **Net Weight** 435.970 **Lbs**

Equipment Z-213-106 **Waste Matrix Code** S3121 **IDC** RF-001 First Stage Sludge

Recording Id 2RTR14-00002 **Procedure Id** INST-OI-12 **Revision** 52 **Approval Level** SPM

Is Test Pattern Resolution Ok? Yes **Start Side** A **Replicate** No **OIO** No

Audio Visual Ok? Yes **Operator** CBEEBE

Result Comment The remaining waste appears to be sludge. cb.

Package

IDC Correct Yes **Recommended IDC** **Summary Category** S3000

Idc Change Reason

Rigid Liner Present? Yes **LinerType** TYPE I

Liner Punctured? Yes **Sharp Objects?** No

Liner Lid Present? Yes **Sharp Objects Are Protected?** Yes

Liner Lid Deformed? No **Layers Of Confinement** 2

Fill Factor 80

Bag Closure Method Twisted and Taped

Liquids

Liquid Present? Yes **Internal Container with Liquid** No

Internal Container with Liquid 0 pints **LA Candidate** No

Liquid Between Liner & Drum 0 pints **Containerized Liquid**

Containerized Liquid Amt 0 pints

Total Liquid Amount .06 pints

Other Liquids .06 pints **Comment** Approx. 2 tbs. of liquid in the bagging at the bottom of the waste.

Prohibited Liquids Present No **Comment**

Contents-Drum or Box

	Value	Comment		Value	Comment
Lead?	Yes, Rejected	One half of a lead liner.	**Mercury Present?**	No	
Wet Cell Batteries?	No		**Explosives?**	No	
Prohibited Compressed Gases?	No		**PCBs Present?**	No	
Aerosol Cans?	No		**PCB Mass (lbs)**	0	
Non-Mixed Hazardous Waste Present?	No		**Sealed Containers Over 4L?**	No	

Non-Radionuclide Pyrophoric Materials Present? No

Waste exhibiting the characteristics of Ignitability, Corrosivity or Reactivity Present? No

Wastes Incompatible with backfill, seal and panel closure materials, container and packaging materials,shipping container or other wastes? No

Impenetrable Dense Objects? Yes - Unacceptable unable to penatrate lead liner when going up the side of the drum.

Waste Material Items

Packaging Materials

Material Item	Quantity	Unit	Unit Wt(lbs)	Item Wt(lbs)
90 mil liner	1.000	EACH	16.000	16.000
Drum plastic bag	1.000	EACH	1.000	1.000
O-ring plastic bag	1.000	EACH	4.000	4.000

Waste Items byWeight

Material Item	Quantity	Unit	Unit Wt(lbs)	Item Wt(lbs)
1/2 of leaded liner.	1.000	EACH	50.000	50.000

Waste Items by Volume

Material Item	Quantity	Unit	Unit Wt(lbs)	Item Wt(lbs)
Liquids for Inorganic Matrix	0.060	PINTS	1.000	0.060

Batch Id RTR14-00006 **Container Id** 10087577 **Analysis Id** 0000094477

Waste Parameters

Waste Parameter	Remaining Weight %	Actual Weight Lbs
Iron-based Metals/Alloys	0.000	0.000
Aluminum-based Metals/Alloys	0.000	0.000
Other metals	0.000	50.000
Other Inorganic Materials	0.000	0.000
Cellulosics	0.000	0.000
Rubber	0.000	0.000
Plastic (Waste Materials)	0.000	0.000
Inorganic matrix	100.000	385.970
Organic matrix	0.000	0.000
Soils/gravel	0.000	0.000
Steel (packaging materials)	0.000	59.000
Plastic (packaging materials)	0.000	21.000
Cellulosics Packaging	0.000	0.000

Analysis Esignature History

Esig Approval Id	User Id	Esignature Date	Comment
2679832	CBEEBE	26-JAN-2014 13:25	

Batch Id RTR14-00006 **Container Id** 10011625 **Analysis Id** 0000094478

Container Type 001 drum, 55 Gallon (17C) **Analysis Status** Pass

RTR Date 26-JAN-2014 13:49 **Gross Weight** 595.350 **Lbs.** **Net Weight** 536.350 **Lbs**

Equipment Z-213-106 **Waste Matrix Code** S5000 **IDC** ID-155 TRU Scrap

Recording Id 2RTR14-00002 **Procedure Id** INST-OI-12 **Revision** 52 **Approval Level** SPM

Is Test Pattern Resolution Ok? Yes **Start Side** A **Replicate** Yes **OIO** No

Audio Visual Ok? Yes **Operator** JDUKE

Result Comment Waste appears to be a dense metal pipe and nails.

Package

IDC Correct Yes **Recommended IDC** **Summary Category** S5000

Idc Change Reason

Rigid Liner Present? No **LinerType** NO LINER

Liner Punctured? N/A **Sharp Objects?** No

Liner Lid Present? No **Sharp Objects Are Protected?** Yes

Liner Lid Deformed? N/A **Layers Of Confinement** 1

Fill Factor 100

Bag Closure Method No Bags

Liquids

Liquid Present? No **Internal Container with Liquid** No

Internal Container with Liquid 0 pints **LA Candidate** No

Liquid Between Liner & Drum 0 pints **Containerized Liquid**

Containerized Liquid Amt 0 pints

Total Liquid Amount 0 pints

Other Liquids 0 pints **Comment**

Prohibited Liquids Present No **Comment**

Contents-Drum or Box

	Value	Comment		Value	Comment
Lead?	No		**Mercury Present?**	No	
Wet Cell Batteries?	No		**Explosives?**	No	
Prohibited Compressed Gases?	No		**PCBs Present?**	No	
Aerosol Cans?	No		**PCB Mass (lbs)**	0	
Non-Mixed Hazardous Waste Present?	No		**Sealed Containers Over 4L?**	Yes	>4 liter sealed 2 inch pipe

Non-Radionuclide Pyrophoric Materials Present? No

Waste exhibiting the characteristics of Ignitability, Corrosivity or Reactivity Present? No

Wastes Incompatible with backfill, seal and panel closure materials, container and packaging materials,shipping container or other wastes? No

Impenetrable Dense Objects? Yes - Unacceptable metal pipe

Waste Material Items

Packaging Materials

Material Item	Quantity	Unit	Unit Wt(lbs)	Item Wt(lbs)

Waste Items byWeight

Material Item	Quantity	Unit	Unit Wt(lbs)	Item Wt(lbs)
plywood	1.000	EACH	80.000	80.000
dense metal pipe	1.000	EACH	1.000	1.000

Waste Items by Volume

Material Item	Quantity	Unit	Unit Wt(lbs)	Item Wt(lbs)

Batch Id RTR14-00006 **Container Id** 10011625 **Analysis Id** 0000094478

Waste Parameters

Waste Parameter	Remaining Weight %	Actual Weight Lbs
Iron-based Metals/Alloys	100.000	456.350
Aluminum-based Metals/Alloys	0.000	0.000
Other metals	0.000	0.000
Other Inorganic Materials	0.000	0.000
Cellulosics	0.000	80.000
Rubber	0.000	0.000
Plastic (Waste Materials)	0.000	0.000
Inorganic matrix	0.000	0.000
Organic matrix	0.000	0.000
Soils/gravel	0.000	0.000
Steel (packaging materials)	0.000	59.000
Plastic (packaging materials)	0.000	0.000
Cellulosics Packaging	0.000	0.000

Analysis Esignature History

Esig Approval Id	User Id	Esignature Date	Comment
2679844	JDUKE	26-JAN-2014 13:50	

Batch Id RTR14-00006 **Container Id** 10087577 **Analysis Id** 0000094481

Container Type A drum, 55 Gallon Drum (17H) **Analysis Status** Pass

RTR Date 26-JAN-2014 14:04 **Gross Weight** 515.970 **Lbs.** **Net Weight** 435.970 **Lbs**

Equipment Z-213-106 **Waste Matrix Code** S3121 **IDC** RF-001 First Stage Sludge

Recording Id 2RTR14-00002 **Procedure Id** INST-OI-12 **Revision** 52 **Approval Level** SPM

Is Test Pattern Resolution Ok? Yes **Start Side** A **Replicate** No **OIO** Yes

Audio Visual Ok? Yes **Operator** JDUKE

Result Comment Waste appears to be sludge.

Package

IDC Correct Yes **Recommended IDC** **Summary Category** S3000

Idc Change Reason

Rigid Liner Present? Yes **LinerType** TYPE 1

Liner Punctured? Yes **Sharp Objects?** No

Liner Lid Present? Yes **Sharp Objects Are Protected?** Yes

Liner Lid Deformed? No **Layers Of Confinement** 2

Fill Factor 84

Bag Closure Method Twisted and Taped

Liquids

Liquid Present? Yes **Internal Container with Liquid** No

Internal Container with Liquid 0 pints **LA Candidate** No

Liquid Between Liner & Drum 0 pints **Containerized Liquid**

Containerized Liquid Amt 0 pints

Total Liquid Amount .09 pints

Other Liquids .09 pints **Comment** .09 pints of liquid located at bottom of drum

Prohibited Liquids Present No **Comment** <1% of outer most container

Contents-Drum or Box

	Value	Comment		Value	Comment
Lead?	Yes, Rejected	half of a lead liner	**Mercury Present?**	No	
Wet Cell Batteries?	No		**Explosives?**	No	
Prohibited Compressed Gases?	No		**PCBs Present?**	No	
Aerosol Cans?	No		**PCB Mass (lbs)**	0	
Non-Mixed Hazardous Waste Present?	No		**Sealed Containers Over 4L?**	No	

Non-Radionuclide Pyrophoric Materials Present? No

Waste exhibiting the characteristics of Ignitability, Corrosivity or Reactivity Present? No

Wastes Incompatible with backfill, seal and panel closure materials, container and packaging materials,shipping container or other wastes? No

Impenetrable Dense Objects? Yes - Unacceptable half of a lead liner

Waste Material Items

Packaging Materials

Material Item	Quantity	Unit	Unit Wt(lbs)	Item Wt(lbs)
90 mil liner	1.000	EACH	16.000	16.000
Drum plastic bag	1.000	EACH	1.000	1.000
O-ring plastic bag	1.000	EACH	4.000	4.000

Waste Items byWeight

Material Item	Quantity	Unit	Unit Wt(lbs)	Item Wt(lbs)
half of a lead liner	1.000	EACH	25.000	25.000

Waste Items by Volume

Material Item	Quantity	Unit	Unit Wt(lbs)	Item Wt(lbs)
Liquids for Inorganic Matrix	0.090	PINTS	1.000	0.090

Batch Id RTR14-00006 **Container Id** 10087577 **Analysis Id** 0000094481

Waste Parameters

Waste Parameter	Remaining Weight %	Actual Weight Lbs
Iron-based Metals/Alloys	0.000	0.000
Aluminum-based Metals/Alloys	0.000	0.000
Other metals	0.000	25.000
Other Inorganic Materials	0.000	0.000
Cellulosics	0.000	0.000
Rubber	0.000	0.000
Plastic (Waste Materials)	0.000	0.000
Inorganic matrix	100.000	410.970
Organic matrix	0.000	0.000
Soils/gravel	0.000	0.000
Steel (packaging materials)	0.000	59.000
Plastic (packaging materials)	0.000	21.000
Cellulosics Packaging	0.000	0.000

RTR Independent Observation

Obsolete	Performed	User Name	Checklist	Answer
No	07-FEB-2014 13:10	CSIMMONS	1.Was an independent observation performed?	Yes
			2.Were all items on the recording media identified correctly in WTS?	No
			3.Do you agree with the operator?	No

Comment The original operator entered the weight of the lead liner as 50 lbs. The OIO operator entered the weight of the lead liner as 25 lbs. I agree with the original operator.
There were other minor differences between the exams; these differences don't affect the DQOs or disposition of the drum.

Independent Observation Esignature History

Esig Approval Id	User Id	Esignature Date	Comment
2689700	CSIMMONS	07-FEB-2014 13:10	OIO checklist complete.

Analysis Esignature History

Esig Approval Id	User Id	Esignature Date	Comment
2679851	JDUKE	26-JAN-2014 14:04	

Batch Id RTR14-00006 **Container Id** 10011837 **Analysis Id** 0000094483

Container Type 001 drum, 55 Gallon (17C) **Analysis Status** Pass

RTR Date 26-JAN-2014 14:29 **Gross Weight** 299.880 **Lbs.** **Net Weight** 224.880 **Lbs**

Equipment Z-213-106 **Waste Matrix Code** S3900 **IDC** IC-603 Laboratory Homogeneous Solids Waste

Recording Id 2RTR14-00002 **Procedure Id** INST-OI-12 **Revision** 52 **Approval Level** SPM

Is Test Pattern Resolution Ok? Yes **Start Side** A **Replicate** No **OIO** No

Audio Visual Ok? Yes **Operator** JDUKE

Result Comment *Waste appears to be sludge.*
AK concurs with the recommended IDC change from IC-601 to IC-603 for container 10011837. AKR-14-819 was attached to NCR 83403 to support this change. CHD 01/28/14

Package

IDC Correct Yes **Recommended IDC** IC-603 **Summary Category** S3000

Idc Change Reason waste is homogeneous solids

Rigid Liner Present? Yes **LinerType** TYPE 4

Liner Punctured? Yes **Sharp Objects?** No

Liner Lid Present? Yes **Sharp Objects Are Protected?** Yes

Liner Lid Deformed? No **Layers Of Confinement** 1

Fill Factor 85

Bag Closure Method Twisted and Taped

Liquids

Liquid Present? No **Internal Container with Liquid** No

Internal Container with Liquid 0 pints **LA Candidate** No

Liquid Between Liner & Drum 0 pints **Containerized Liquid**

Total Liquid Amount 0 pints **Containerized Liquid Amt** 0 pints

Other Liquids 0 pints **Comment**

Prohibited Liquids Present No **Comment**

Contents-Drum or Box

	Value	Comment		Value	Comment
Lead?	No		**Mercury Present?**	No	
Wet Cell Batteries?	No		**Explosives?**	No	
Prohibited Compressed Gases?	No		**PCBs Present?**	Yes - Acceptable	no liquids
Aerosol Cans?	No		**PCB Mass (lbs)**	224.88	
Non-Mixed Hazardous Waste Present?	No		**Sealed Containers Over 4L?**	No	

Non-Radionuclide Pyrophoric Materials Present? No

Waste exhibiting the characteristics of Ignitability, Corrosivity or Reactivity Present? No

Wastes Incompatible with backfill, seal and panel closure materials, container and packaging materials,shipping container or other wastes? No

Impenetrable Dense Objects? No

Waste Material Items

Packaging Materials

Material Item	Quantity	Unit	Unit Wt(lbs)	Item Wt(lbs)
90 mil liner	1.000	EACH	16.000	16.000

Waste Items byWeight

Material Item	Quantity	Unit	Unit Wt(lbs)	Item Wt(lbs)
plastic bagging	1.000	EACH	3.000	3.000
Plastic bag for waste	1.000	EACH	0.250	0.250

Waste Items by Volume

Material Item	Quantity	Unit	Unit Wt(lbs)	Item Wt(lbs)

Batch Id RTR14-00006 **Container Id** 10011837 **Analysis Id** 0000094483

Waste Parameters

Waste Parameter	Remaining Weight %	Actual Weight Lbs
Iron-based Metals/Alloys	0.000	0.000
Aluminum-based Metals/Alloys	0.000	0.000
Other metals	0.000	0.000
Other Inorganic Materials	0.000	0.000
Cellulosics	0.000	0.000
Rubber	0.000	0.000
Plastic (Waste Materials)	0.000	3.250
Inorganic matrix	0.000	0.000
Organic matrix	100.000	221.630
Soils/gravel	0.000	0.000
Steel (packaging materials)	0.000	59.000
Plastic (packaging materials)	0.000	16.000
Cellulosics Packaging	0.000	0.000

Analysis Esignature History

Esig Approval Id	User Id	Esignature Date	Comment
2680833	CHINKLE	28-JAN-2014 09:12	This batch is returned for rework. AK does not concur with the recommended IDC change for containers 10453926, 10368653, 10368237, 10360644, 10357107, 10352593, 10352573, 10352409 and 10123450. CHD 01/28/14
2679870	JDUKE	26-JAN-2014 14:29	

Batch Id RTR14-00006 **Container Id** 10108300 **Analysis Id** 0000094484

Container Type A drum, 55 Gallon Drum (17H) **Analysis Status** Pass

RTR Date 26-JAN-2014 14:43 **Gross Weight** 189.630 **Lbs.** **Net Weight** 109.630 **Lbs**

Equipment Z-213-106 **Waste Matrix Code** S3150 **IDC** RF-292 Cemented Sludge

Recording Id 2RTR14-00002 **Procedure Id** INST-OI-12 **Revision** 52 **Approval Level** SPM

Is Test Pattern Resolution Ok? Yes **Start Side** A **Replicate** No **OIO** No

Audio Visual Ok? Yes **Operator** JDUKE

Result Comment Waste appears to be sludge.

Package

IDC Correct Yes **Recommended IDC** **Summary Category** S3000

Idc Change Reason

Rigid Liner Present? Yes **LinerType** TYPE 1

Liner Punctured? Yes **Sharp Objects?** No

Liner Lid Present? Yes **Sharp Objects Are Protected?** Yes

Liner Lid Deformed? No **Layers Of Confinement** 2

Fill Factor 77

Bag Closure Method Twisted and Taped

Liquids

Liquid Present? No **Internal Container with Liquid** No

Internal Container with Liquid 0 pints **LA Candidate** No

Liquid Between Liner & Drum 0 pints **Containerized Liquid**

Total Liquid Amount 0 pints **Containerized Liquid Amt** 0 pints

Other Liquids 0 pints **Comment**

Prohibited Liquids Present No **Comment**

Contents-Drum or Box

	Value	Comment		Value	Comment
Lead?	No		**Mercury Present?**	No	
Wet Cell Batteries?	No		**Explosives?**	No	
Prohibited Compressed Gases?	No		**PCBs Present?**	No	
Aerosol Cans?	No		**PCB Mass (lbs)**	0	
Non-Mixed Hazardous Waste Present?	No		**Sealed Containers Over 4L?**	No	

Non-Radionuclide Pyrophoric Materials Present? No

Waste exhibiting the characteristics of Ignitability, Corrosivity or Reactivity Present? No

Wastes Incompatible with backfill, seal and panel closure materials, container and packaging materials,shipping container or other wastes? No

Impenetrable Dense Objects? No

Waste Material Items

Packaging Materials

Material Item	Quantity	Unit	Unit Wt(lbs)	Item Wt(lbs)
90 mil liner	1.000	EACH	16.000	16.000
Drum plastic bag	1.000	EACH	1.000	1.000
O-ring plastic bag	1.000	EACH	4.000	4.000

Waste Items byWeight

Material Item	Quantity	Unit	Unit Wt(lbs)	Item Wt(lbs)
metal cans	1.000	EACH	12.000	12.000

Waste Items by Volume

Material Item	Quantity	Unit	Unit Wt(lbs)	Item Wt(lbs)

Batch Id RTR14-00006 **Container Id** 10108300 **Analysis Id** 0000094484

Waste Parameters

Waste Parameter	Remaining Weight %	Actual Weight Lbs
Iron-based Metals/Alloys	0.000	12.000
Aluminum-based Metals/Alloys	0.000	0.000
Other metals	0.000	0.000
Other Inorganic Materials	0.000	0.000
Cellulosics	0.000	0.000
Rubber	0.000	0.000
Plastic (Waste Materials)	0.000	0.000
Inorganic matrix	100.000	97.630
Organic matrix	0.000	0.000
Soils/gravel	0.000	0.000
Steel (packaging materials)	0.000	59.000
Plastic (packaging materials)	0.000	21.000
Cellulosics Packaging	0.000	0.000

Analysis Esignature History

Esig Approval Id	User Id	Esignature Date	Comment
2679885	JDUKE	26-JAN-2014 14:43	

Batch Id RTR14-00006 **Container Id** 10113569 **Analysis Id** 0000094485

Container Type A drum, 55 Gallon Drum (17H) **Analysis Status** Pass

RTR Date 26-JAN-2014 16:15 **Gross Weight** 524.790 **Lbs.** **Net Weight** 447.790 **Lbs**

Equipment Z-213-106 **Waste Matrix Code** S3121 **IDC** RF-001 First Stage Sludge

Recording Id 2RTR14-00002 **Procedure Id** INST-OI-12 **Revision** 52 **Approval Level** SPM

Is Test Pattern Resolution Ok? Yes **Start Side** A **Replicate** No **OIO** No

Audio Visual Ok? Yes **Operator** JDUKE

Result Comment Waste appears to be sludge
Rework to correct Impenetrable question. DKL 2/8/14

Package

IDC Correct Yes **Recommended IDC** **Summary Category** S3000

Idc Change Reason

Rigid Liner Present? Yes **LinerType** TYPE I

Liner Punctured? Yes **Sharp Objects?** No

Liner Lid Present? Yes **Sharp Objects Are Protected?** Yes

Liner Lid Deformed? No **Layers Of Confinement** 2

Fill Factor 85

Bag Closure Method Twisted and Taped

Liquids

Liquid Present? No **Internal Container with Liquid** No

Internal Container with Liquid 0 pints **LA Candidate** No

Liquid Between Liner & Drum 0 pints **Containerized Liquid**

Total Liquid Amount 0 pints **Containerized Liquid Amt** 0 pints

Other Liquids 0 pints **Comment**

Prohibited Liquids Present No **Comment**

Contents-Drum or Box

	Value	Comment		Value	Comment
Lead?	Yes, Rejected	2 lead disks	**Mercury Present?**	No	
Wet Cell Batteries?	No		**Explosives?**	No	
Prohibited Compressed Gases?	No		**PCBs Present?**	No	
Aerosol Cans?	No		**PCB Mass (lbs)**	0	
Non-Mixed Hazardous Waste Present?	No		**Sealed Containers Over 4L?**	No	

Non-Radionuclide Pyrophoric Materials Present? No

Waste exhibiting the characteristics of Ignitability, Corrosivity or Reactivity Present? No

Wastes Incompatible with backfill, seal and panel closure materials, container and packaging materials,shipping container or other wastes? No

Impenetrable Dense Objects? Yes - Unacceptable lead disk at bottom of waste

Waste Material Items

Packaging Materials

Material Item	Quantity	Unit	Unit Wt(lbs)	Item Wt(lbs)
90 mil liner	1.000	EACH	16.000	16.000
Drum plastic bag	2.000	EACH	1.000	2.000

Waste Items byWeight

Material Item	Quantity	Unit	Unit Wt(lbs)	Item Wt(lbs)
2 lead disks	1.000	EACH	12.000	12.000

Waste Items by Volume

Material Item	Quantity	Unit	Unit Wt(lbs)	Item Wt(lbs)

Batch Id RTR14-00006 **Container Id** 10113569 **Analysis Id** 0000094485

Waste Parameters

Waste Parameter	Remaining Weight %	Actual Weight Lbs
Iron-based Metals/Alloys	0.000	0.000
Aluminum-based Metals/Alloys	0.000	0.000
Other metals	0.000	12.000
Other Inorganic Materials	0.000	0.000
Cellulosics	0.000	0.000
Rubber	0.000	0.000
Plastic (Waste Materials)	0.000	0.000
Inorganic matrix	100.000	435.790
Organic matrix	0.000	0.000
Soils/gravel	0.000	0.000
Steel (packaging materials)	0.000	59.000
Plastic (packaging materials)	0.000	18.000
Cellulosics Packaging	0.000	0.000

Analysis Esignature History

Esig Approval Id	User Id	Esignature Date	Comment
2690312	DLEE	08-FEB-2014 13:46	
2679922	JDUKE	26-JAN-2014 16:49	
2679910	JDUKE	26-JAN-2014 16:15	

AMWTP
Advanced Mixed Waste Treatment Project

AMWTP

RTR Analysis Report

Date: 22-Sep-2014

Time: 08:40

Batch Id RTR14-00006 **Container Id** 10011849 **Analysis Id** 0000094486

Container Type 001 drum, 55 Gallon (17C) **Analysis Status** Pass

RTR Date 26-JAN-2014 16:44 **Gross Weight** 286.650 **Lbs.** **Net Weight** 211.650 **Lbs**

Equipment Z-213-106 **Waste Matrix Code** S3900 **IDC** IC-603 Laboratory Homogeneous Solids Waste

Recording Id 2RTR14-00002 **Procedure Id** INST-OI-12 **Revision** 52 **Approval Level** SPM

Is Test Pattern Resolution Ok? Yes **Start Side** A **Replicate** No **OIO** No

Audio Visual Ok? Yes **Operator** JDUKE

Result Comment Waste appears to be sludge
AK concurs with the recommended IDC change from IC-601 to IC-603 for container 10011849. AKR-14-819 was attached to NCR 83402 to support this change. CHD 01/28/14
Rework to correct the liquid comment and to update the waste parameters. DKL 2/8/14

Package

IDC Correct Yes **Recommended IDC** IC-603 **Summary Category** S3000

Idc Change Reason >50% homogeneous solid waste.

Rigid Liner Present? Yes **LinerType** TYPE 4

Liner Punctured? Yes **Sharp Objects?** No

Liner Lid Present? Yes **Sharp Objects Are Protected?** Yes

Liner Lid Deformed? No **Layers Of Confinement** 1

Fill Factor 94

Bag Closure Method Twisted and Taped

Liquids

Liquid Present? Yes **Internal Container with Liquid** No

Internal Container with Liquid 0 pints **LA Candidate** No

Liquid Between Liner & Drum 0 pints **Containerized Liquid**

Containerized Liquid Amt 0 pints

Total Liquid Amount .26 pints

Other Liquids .26 pints **Comment** .20 pints of liquid located in bagging below top chine. .06 pints of liquid located at bottom of drum in bagging.

Prohibited Liquids Present Yes **Comment** pcb's w/liquid

Contents-Drum or Box

	Value	Comment		Value	Comment
Lead?	No		**Mercury Present?**	No	
Wet Cell Batteries?	No		**Explosives?**	No	
Prohibited Compressed Gases?	No		**PCBs Present?**	Yes - Prohibited	pcb's w/liquid
Aerosol Cans?	No		**PCB Mass (lbs)**	211.65	
Non-Mixed Hazardous Waste Present?	No		**Sealed Containers Over 4L?**	No	

Non-Radionuclide Pyrophoric Materials Present? No

Waste exhibiting the characteristics of Ignitability, Corrosivity or Reactivity Present? No

Wastes Incompatible with backfill, seal and panel closure materials, container and packaging materials,shipping container or other wastes? No

Impenetrable Dense Objects? No

Waste Material Items

Packaging Materials

Material Item	Quantity	Unit	Unit Wt(lbs)	Item Wt(lbs)
90 mil liner	1.000	EACH	16.000	16.000

Waste Items byWeight

Material Item	Quantity	Unit	Unit Wt(lbs)	Item Wt(lbs)
Plastic bagging	1.000	EACH	12.000	12.000
misc. metal debris	1.000	EACH	1.000	1.000
glass lab wear	1.000	EACH	20.000	20.000
Plastic bag for waste	1.000	EACH	0.250	0.250

Batch Id RTR14-00006 **Container Id** 10011849 **Analysis Id** 0000094486

Waste Items by Volume

Material Item	Quantity	Unit	Unit Wt(lbs)	Item Wt(lbs)
Liquids for Organic Matrix	0.260	PINTS	1.000	0.260

Waste Parameters

Waste Parameter	Remaining Weight %	Actual Weight Lbs
Iron-based Metals/Alloys	0.000	1.000
Aluminum-based Metals/Alloys	0.000	0.000
Other metals	0.000	0.000
Other Inorganic Materials	0.000	20.000
Cellulosics	0.000	0.000
Rubber	0.000	0.000
Plastic (Waste Materials)	0.000	12.250
Inorganic matrix	0.000	0.000
Organic matrix	100.000	178.400
Soils/gravel	0.000	0.000
Steel (packaging materials)	0.000	59.000
Plastic (packaging materials)	0.000	16.000
Cellulosics Packaging	0.000	0.000

Analysis Esignature History

Esig Approval Id	User Id	Esignature Date	Comment
2690311	DLEE	08-FEB-2014 13:44	
2680832	CHINKLE	28-JAN-2014 09:12	This batch is returned for rework. AK does not concur with the recommended IDC change for containers 10453926, 10368653, 10368237, 10360644, 10357107, 10352593, 10352573, 10352409 and 10123450. CHD 01/28/14
2679921	JDUKE	26-JAN-2014 16:44	

AMWTP
Advanced Mixed Waste Treatment Project

AMWTP

RTR Analysis Report

Date: 22-Sep-2014

Time: 08:40

Batch Id RTR14-00006 **Container Id** 10455977 **Analysis Id** 0000094489

Container Type 425 drum, 55 Gallon (UN1A2/X425/S), DOT/WIPP approved **Analysis Status** Pass

RTR Date 26-JAN-2014 17:11 **Gross Weight** 531.405 **Lbs.** **Net Weight** 454.405 **Lbs**

Equipment Z-213-106 **Waste Matrix Code** S3121 **IDC** RF-002 Second Stage Sludge

Recording Id 2RTR14-00002 **Procedure Id** INST-OI-12 **Revision** 52 **Approval Level** SPM

Is Test Pattern Resolution Ok? Yes **Start Side** A **Replicate** No **OIO** No

Audio Visual Ok? Yes **Operator** JDUKE

Result Comment Waste appears to be sludge.

Package

IDC Correct Yes **Recommended IDC** **Summary Category** S3000

Idc Change Reason

Rigid Liner Present? Yes **LinerType** TYPE 1

Liner Punctured? Yes **Sharp Objects?** No

Liner Lid Present? Yes **Sharp Objects Are Protected?** Yes

Liner Lid Deformed? No **Layers Of Confinement** 2

Fill Factor 98

Bag Closure Method Twisted and Taped

Liquids

Liquid Present? Yes **Internal Container with Liquid** No

Internal Container with Liquid 0 pints **LA Candidate** No

Liquid Between Liner & Drum 0 pints **Containerized Liquid**

Containerized Liquid Amt 0 pints

Total Liquid Amount .17 pints

Other Liquids .17 pints **Comment** .12 pts of liquid located between bottom of drum and bottom chine. .05 pints of liquid located below top chine

Prohibited Liquids Present No **Comment** <1% of outer most container

Contents-Drum or Box

	Value	Comment		Value	Comment
Lead?	No		Mercury Present?	No	
Wet Cell Batteries?	No		Explosives?	No	
Prohibited Compressed Gases?	No		PCBs Present?	No	
Aerosol Cans?	No		PCB Mass (lbs)	0	
Non-Mixed Hazardous Waste Present?	No		Sealed Containers Over 4L?	No	

Non-Radionuclide Pyrophoric Materials Present? No

Waste exhibiting the characteristics of Ignitability, Corrosivity or Reactivity Present? No

Wastes Incompatible with backfill, seal and panel closure materials, container and packaging materials,shipping container or other wastes? No

Impenetrable Dense Objects? No

Waste Material Items

Packaging Materials

Material Item	Quantity	Unit	Unit Wt(lbs)	Item Wt(lbs)
90 mil liner	1.000	EACH	16.000	16.000
Drum plastic bag	2.000	EACH	1.000	2.000

Waste Items byWeight

Material Item	Quantity	Unit	Unit Wt(lbs)	Item Wt(lbs)

Waste Items by Volume

Material Item	Quantity	Unit	Unit Wt(lbs)	Item Wt(lbs)
Liquids for Inorganic Matrix	0.170	PINTS	1.000	0.170

Batch Id RTR14-00006 **Container Id** 10455977 **Analysis Id** 0000094489

Waste Parameters

Waste Parameter	Remaining Weight %	Actual Weight Lbs
Iron-based Metals/Alloys	0.000	0.000
Aluminum-based Metals/Alloys	0.000	0.000
Other metals	0.000	0.000
Other Inorganic Materials	0.000	0.000
Cellulosics	0.000	0.000
Rubber	0.000	0.000
Plastic (Waste Materials)	0.000	0.000
Inorganic matrix	100.000	454.405
Organic matrix	0.000	0.000
Soils/gravel	0.000	0.000
Steel (packaging materials)	0.000	59.000
Plastic (packaging materials)	0.000	18.000
Cellulosics Packaging	0.000	0.000

Analysis Esignature History

Esig Approval Id	User Id	Esignature Date	Comment
2679930	JDUKE	26-JAN-2014 17:11	

AMWTP
Advanced Mixed Waste Treatment Project

AMWTP

RTR Analysis Report

Date: 22-Sep-2014
Time: 08:40

Batch Id RTR14-00006 **Container Id** 10132803 **Analysis Id** 0000094490

Container Type A drum, 55 Gallon Drum (17H) **Analysis Status** Pass

RTR Date 26-JAN-2014 17:25 **Gross Weight** 529.200 **Lbs.** **Net Weight** 452.200 **Lbs**

Equipment Z-213-106 **Waste Matrix Code** S3121 **IDC** RF-001 First Stage Sludge

Recording Id 2RTR14-00002 **Procedure Id** INST-OI-12 **Revision** 52 **Approval Level** SPM

Is Test Pattern Resolution Ok? Yes **Start Side** A **Replicate** No **OIO** No

Audio Visual Ok? Yes **Operator** JDUKE

Result Comment Waste appears to be sludge.
Rework to correct the impenetrable question. DKL 2/8/14

Package

IDC Correct Yes **Recommended IDC** **Summary Category** S3000

Idc Change Reason

Rigid Liner Present? Yes **LinerType** TYPE I

Liner Punctured? Yes **Sharp Objects?** No

Liner Lid Present? Yes **Sharp Objects Are Protected?** Yes

Liner Lid Deformed? No **Layers Of Confinement** 2

Fill Factor 90

Bag Closure Method Twisted and Taped

Liquids

Liquid Present? No **Internal Container with Liquid** No

Internal Container with Liquid 0 pints **LA Candidate** No

Liquid Between Liner & Drum 0 pints **Containerized Liquid**

Total Liquid Amount 0 pints **Containerized Liquid Amt** 0 pints

Other Liquids 0 pints **Comment**

Prohibited Liquids Present No **Comment**

Contents-Drum or Box

	Value	Comment		Value	Comment
Lead?	Yes, Rejected	lead liner - shielding	**Mercury Present?**	No	
Wet Cell Batteries?	No		**Explosives?**	No	
Prohibited Compressed Gases?	No		**PCBs Present?**	No	
Aerosol Cans?	No		**PCB Mass (lbs)**	0	
Non-Mixed Hazardous Waste Present?	No		**Sealed Containers Over 4L?**	No	

Non-Radionuclide Pyrophoric Materials Present? No

Waste exhibiting the characteristics of Ignitability, Corrosivity or Reactivity Present? No

Wastes Incompatible with backfill, seal and panel closure materials, container and packaging materials,shipping container or other wastes? No

Impenetrable Dense Objects? Yes - Unacceptable lead liner

Waste Material Items

Packaging Materials

Material Item	Quantity	Unit	Unit Wt(lbs)	Item Wt(lbs)
90 mil liner	1.000	EACH	16.000	16.000
Drum plastic bag	2.000	EACH	1.000	2.000

Waste Items byWeight

Material Item	Quantity	Unit	Unit Wt(lbs)	Item Wt(lbs)
Drum lead-liner (1/16"x28"x72")	1.000	EACH	50.000	50.000

Waste Items by Volume

Material Item	Quantity	Unit	Unit Wt(lbs)	Item Wt(lbs)

Batch Id RTR14-00006 **Container Id** 10132803 **Analysis Id** 0000094490

Waste Parameters

Waste Parameter	Remaining Weight %	Actual Weight Lbs
Iron-based Metals/Alloys	0.000	0.000
Aluminum-based Metals/Alloys	0.000	0.000
Other metals	0.000	50.000
Other Inorganic Materials	0.000	0.000
Cellulosics	0.000	0.000
Rubber	0.000	0.000
Plastic (Waste Materials)	0.000	0.000
Inorganic matrix	100.000	402.200
Organic matrix	0.000	0.000
Soils/gravel	0.000	0.000
Steel (packaging materials)	0.000	59.000
Plastic (packaging materials)	0.000	18.000
Cellulosics Packaging	0.000	0.000

Analysis Esignature History

Esig Approval Id	User Id	Esignature Date	Comment
2690321	DLEE	08-FEB-2014 14:01	
2679935	JDUKE	26-JAN-2014 17:25	

Batch Id RTR14-00006 **Container Id** 10456014 **Analysis Id** 0000094492

Container Type 425 drum, 55 Gallon (UN1A2/X425/S), DOT/WIPP approved **Analysis Status** Pass

RTR Date 26-JAN-2014 17:51 **Gross Weight** 529.200 **Lbs.** **Net Weight** 452.200 **Lbs**

Equipment Z-213-106 **Waste Matrix Code** S3121 **IDC** RF-002 Second Stage Sludge

Recording Id 2RTR14-00002 **Procedure Id** INST-OI-12 **Revision** 52 **Approval Level** SPM

Is Test Pattern Resolution Ok? Yes **Start Side** A **Replicate** No **OIO** No

Audio Visual Ok? Yes **Operator** JDUKE

Result Comment Waste appears to be sludge.
(rework) Entered "No" into Prohibited Liquids Present field. KH 18FEB14

Package

IDC Correct Yes **Recommended IDC** **Summary Category** S3000

Idc Change Reason

Rigid Liner Present? Yes **LinerType** TYPE I

Liner Punctured? Yes **Sharp Objects?** No

Liner Lid Present? Yes **Sharp Objects Are Protected?** Yes

Liner Lid Deformed? No **Layers Of Confinement** 2

Fill Factor 93

Bag Closure Method Twisted and Taped

Liquids

Liquid Present? Yes **Internal Container with Liquid** No

Internal Container with Liquid 0 pints **LA Candidate** No

Liquid Between Liner & Drum 0 pints **Containerized Liquid**

Containerized Liquid Amt 0 pints

Total Liquid Amount 1.52 pints

Other Liquids 1.52 pints **Comment** .02 pts. of liquid located above center chine. 1.5 pints of liquid locate at top of waste

Prohibited Liquids Present No **Comment**

Contents-Drum or Box

	Value	Comment		Value	Comment
Lead?	No		**Mercury Present?**	No	
Wet Cell Batteries?	No		**Explosives?**	No	
Prohibited Compressed Gases?	No		**PCBs Present?**	No	
Aerosol Cans?	No		**PCB Mass (lbs)**	0	
Non-Mixed Hazardous Waste Present?	No		**Sealed Containers Over 4L?**	No	

Non-Radionuclide Pyrophoric Materials Present? No

Waste exhibiting the characteristics of Ignitability, Corrosivity or Reactivity Present? No

Wastes Incompatible with backfill, seal and panel closure materials, container and packaging materials,shipping container or other wastes? No

Impenetrable Dense Objects? No

Waste Material Items

Packaging Materials

Material Item	Quantity	Unit	Unit Wt(lbs)	Item Wt(lbs)
90 mil liner	1.000	EACH	16.000	16.000
Drum plastic bag	2.000	EACH	1.000	2.000

Waste Items byWeight

Material Item	Quantity	Unit	Unit Wt(lbs)	Item Wt(lbs)

Waste Items by Volume

Material Item	Quantity	Unit	Unit Wt(lbs)	Item Wt(lbs)
Liquids for Inorganic Matrix	1.520	PINTS	1.000	1.520

Batch Id RTR14-00006 **Container Id** 10456014 **Analysis Id** 0000094492

Waste Parameters

Waste Parameter	Remaining Weight %	Actual Weight Lbs
Iron-based Metals/Alloys	0.000	0.000
Aluminum-based Metals/Alloys	0.000	0.000
Other metals	0.000	0.000
Other Inorganic Materials	0.000	0.000
Cellulosics	0.000	0.000
Rubber	0.000	0.000
Plastic (Waste Materials)	0.000	0.000
Inorganic matrix	100.000	452.200
Organic matrix	0.000	0.000
Soils/gravel	0.000	0.000
Steel (packaging materials)	0.000	59.000
Plastic (packaging materials)	0.000	18.000
Cellulosics Packaging	0.000	0.000

Analysis Esignature History

Esig Approval Id	User Id	Esignature Date	Comment
2698671	KHUGHES	18-FEB-2014 13:15	
2679945	JDUKE	26-JAN-2014 17:57	
2679942	JDUKE	26-JAN-2014 17:51	
2679940	JDUKE	26-JAN-2014 17:51	

-----End of RTR Analysis Report-----

AMWTP

Advanced Mixed Waste Treatment Project

AMWTP

RTR Replicate Comparison Report

Date: 22-Sep-2014

Time: 08:42

RTR Batch Id: RTR14-00006 **Container Id:** 10011625 **Equipment Id:** Z-213-106

Container type Description: **drum, 55 Gallon (17C)** Gen-IDC: **ID-155** Gross Weight(Lbs): **595.35**

	Original Analysis		Replicate Analysis	
Analysis Id / Date:	0000094476	26-JAN-2014 12:50	0000094478	26-JAN-2014 13:49
Procedure /Revision:	INST-OI-12	52	INST-OI-12	52
Recording Media Id:	2RTR14-00002		2RTR14-00002	
Starting Position:	A		A	
Is Test Pattern Resolution Ok?	Y		Y	
Audio Visual Ok?	Y		Y	
Personnel Name:	CONLEY BEEBE		JACE DUKE	
IDC Ok? / Recommended IDC:	Y		Y	
IDC Change Reason:				
Summary Category / Waste matrix Code:	S5000	S5000	S5000	S5000
Packaging				
Rigid Liner Present?	N		N	
Liner Type Code:	NO LINER		NO LINER	
Liner Punctured:	NA		NA	
Liner Lid Deformed:	NA		NA	
Layers Of Confinement:	1		1	
Sharp Objects?	N		N	
Sharp Objects Protected?	Y		Y	
Fill Factor(%):	100		100	
Bag Closure Method:	No Bags		No Bags	
Liner Lid Present?:	N		N	
Liquids: (Volume in Pints)				
Liquid Present?	N		N	
Internal Container with Liquid?		0		0
Containerized Liquid	N		N	
Other Liquids:	0		0	
Internal Container with Liquid Amt:	0		0	
Liquid Between Liner and Drum:	0		0	
Containerized Liquid:	0		0	
Total Liquid Amount:	0		0	
LA Candidate?	N		N	
Prohibited Liquids Present	N		N	

Contents:	Y/N	Comments	Y/N	Comments
Sealed Containers over 4L?	Y	Large sealed metal container	Y	>4 liter sealed 2 inch pipe
Lead Present?	N		N	
Explosives Present?	N		N	
Mercury Present?	N		N	
Wet Cell Batteries Detected?	N		N	

AMWTP
Advanced Mixed Waste Treatment Project

AMWTP

RTR Replicate Comparison Report

Date: 22-Sep-2014

Time: 08:42

RTR Batch Id: RTR14-00006 **Container Id:** 10011625 **Equipment Id:** Z-213-106

	Original Analysis		Replicate Analysis	
Prohibited Compressed Gas Present?	N		N	
PCBs Present?	N		N	
PCB Mass (lbs)	0		0	
Non-Radionuclide Pyrophoric Materials Present?	N		N	
Waste exhibiting the characteristics of ignitability, Corrosivity or reactivity Present?	N		N	
Non-Mixed Hazardous Waste Present?	N		N	
Waste Incompatibles with backfill, Seal and panel closure materials, container and packaging material, shipping container or other wastes?	N		N	
Impenetrable Dense Objects?	Y	dense metal container.	Y	metal pipe
Result Comment:	The remaining waste appears to be scrap metal in the form of a dense metal container. cb.		Waste appears to be a dense metal pipe and nails.	

----------E-signature----------

Esig Approval ID	User ID	Signature Date	Comment
2689663	CSIMMONS	07-FEB-14	Signed replicate comparison.

-----End of RTR Replicate Comparison Report-----

AMWTP
Advanced Mixed Waste Treatment Project

AMWTP
RTR OIO Comparison Report

Date: 22-Sep-2014
Time: 08:43

RTR Batch Id: RTR14-00006 **Container Id:** 10087577 **Equipment Id:** Z-213-106

Container type Description: **drum, 55 Gallon Drum (17H)** Gen-IDC: **RF-001** Gross Weight(Lbs): **515.97**

	Original Analysis		OIO Analysis	
Analysis Id / Date:	0000094477	26-JAN-2014 13:25	0000094481	26-JAN-2014 14:04
Procedure /Revision:	INST-OI-12	52	INST-OI-12	52
Recording Media Id:	2RTR14-00002		2RTR14-00002	
Starting Position:	A		A	
Is Test Pattern Resolution Ok?	Y		Y	
Audio Visual Ok?	Y		Y	
Personnel Name:	CONLEY BEEBE		JACE DUKE	
IDC Ok? / Recommended IDC:	Y		Y	
IDC Change Reason:				
Summary Category / Waste matrix Code:	S3000	S3121	S3000	S3121
Packaging				
Rigid Liner Present?	Y		Y	
Liner Type Code:	TYPE 1		TYPE 1	
Liner Punctured:	Y		Y	
Liner Lid Deformed:	N		N	
Layers Of Confinement:	2		2	
Sharp Objects?	N		N	
Sharp Objects Protected?	Y		Y	
Fill Factor(%):	80		84	
Bag Closure Method:	Twisted and Taped		Twisted and Taped	
Liner Lid Present?:	Y		Y	
Liquids: (Volume in Pints)				
Liquid Present?	Y		Y	
Internal Container with Liquid?	0		0	
Containerized Liquid	N	Approx. 2 tbs. of liquid in the bagging at the bottom of the waste.	N	.09 pints of liquid located at bottom of drum
Other Liquids:	.06		.09	
Internal Container with Liquid Amt:	0		0	
Liquid Between Liner and Drum:	0		0	
Containerized Liquid:	0		0	
Total Liquid Amount:	.06		.09	
LA Candidate?	N		N	
Prohibited Liquids Present	N		N	<1% of outer most container

Contents:	Y/N	Comments	Y/N	Comments
Sealed Containers over 4L?	N		N	
Lead Present?	Yes, Rejected	One half of a lead liner.	Yes, Rejected	half of a lead liner
Explosives Present?	N		N	
Mercury Present?	N		N	
Wet Cell Batteries Detected?	N		N	

AMWTP
Advanced Mixed Waste Treatment Project

AMWTP

RTR OIO Comparison Report

Date: 22-Sep-2014

Time: 08:43

RTR Batch Id: RTR14-00006 **Container Id:** 10087577 **Equipment Id:** Z-213-106

	Original Analysis		OIO Analysis	
Prohibited Compressed Gas Present?	N		N	
PCBs Present?	N		N	
PCB Mass (lbs)	0		0	
Non-Radionuclide Pyrophoric Materials Present?	N		N	
Waste exhibiting the characteristics of ignitability, Corrosivity or reactivity Present?	N		N	
Non-Mixed Hazardous Waste Present?	N		N	
Waste Incompatibles with backfill, Seal and panel closure materials, container and packaging material, shipping container or other wastes?	N		N	
Impenetrable Dense Objects?	Y	unable to penatrate lead liner when going up the side of the drum.	Y	half of a lead liner
Result Comment:	The remaining waste appears to be sludge. cb.		Waste appears to be sludge.	

----------E-signature----------

Esig Approval ID	User ID	Signature Date	Comment

-----End of RTR OIO Comparison Report-----

AMWTP
Advanced Mixed Waste Treatment Project

AMWTP

Batch Report Coversheet

Date: 22-Sep-2014

Time: 09:02

Batch Type Real Time Radiography
Batch Report No. RTR14-00067
Batch Id RTR14-00067
Open Date 21-MAR-14 12:35:56
Close Date 22-MAR-14 15:09:45
Batch Status AP
Test Facility Idaho AMWTP
Equipment Id Z-213-106 RTR Station Right (213-106)

Container Id	IDC	Analysis Id	Date Examined	QC Type	Analysis Status	Operator
10241045	RF-004	0000095991	21-MAR-14 12:35:56	Original	P	AARON ATWELL
10109274	RF-292	0000095992	21-MAR-14 13:09:38	Original	P	FRANK KUCK
10002718	RF-004	0000095993	21-MAR-14 13:34:35	Original	P	FRANK KUCK
10241045	RF-004	0000095994	21-MAR-14 13:45:53	Replicate / Duplicate	P	FRANK KUCK
10344147	RF-900	0000095996	21-MAR-14 14:19:50	Original	P	FRANK KUCK
10342956	RF-336	0000096002	21-MAR-14 14:38:44	Original	P	FRANK KUCK
10212359	RF-995	0000096003	21-MAR-14 14:56:40	Original	P	FRANK KUCK
10343976	RF-950	0000096004	21-MAR-14 15:11:22	Original	P	FRANK KUCK
10341643	RF-330	0000096006	21-MAR-14 16:26:52	Original	P	FRANK KUCK
10029340	MD-836	0000096008	21-MAR-14 16:36:50	Original	P	FRANK KUCK
10112388	RF-001	0000096011	21-MAR-14 16:53:16	Original	P	FRANK KUCK
10342452	RF-960	0000096015	21-MAR-14 17:18:52	Original	P	FRANK KUCK
10031534	RF-004	0000096016	22-MAR-14 09:55:52	Original	P	CONLEY BEEBE
10220409	RF-002	0000096017	22-MAR-14 10:26:11	Original	P	CONLEY BEEBE
10207672	RF-004	0000096018	22-MAR-14 10:54:29	Original	P	CONLEY BEEBE
10342646	RF-760	0000096020	22-MAR-14 11:28:21	Original	P	CINDY TIEGS
10030268	RF-421	0000096034	22-MAR-14 12:24:31	Original	P	CONLEY BEEBE
10031534	RF-004	0000096035	22-MAR-14 13:07:57	RTR OIO	P	DIANNA MOORE
10043863	BW-515	0000096036	22-MAR-14 13:35:27	Original	P	DIANNA MOORE
10242168	RF-002	0000096037	22-MAR-14 13:57:42	Original	P	DIANNA MOORE
10217845	RF-004	0000096039	22-MAR-14 14:45:38	Original	P	DIANNA MOORE
10241105	RF-002	0000096040	22-MAR-14 15:08:44	Original	P	DIANNA MOORE

**********Batch Comments**********

Written By	Date	Comment
CHINKLE	14-APR-14 10:30:29	14-APR-14 CHINKLE AKE This batch is returned for rework. AK does not concur with the recommended IDC change for container 10342646. CHD 04/14/14
CTIEGS	17-APR-14 15:53:24	rework complete
CHINKLE	21-APR-14 05:25:09	14-APR-14 CHINKLE AKE This batch is returned for rework. AK does not concur with the recommended IDC change for container 10342646. CHD 04/14/14 21-APR-14 CHINKLE AKE Batch is promoted. chd 4/21/14
DLEE	06-MAY-14 09:26:22	This batch was validated to MP-TRUW-8.8.
DLEE	06-MAY-14 09:26:40	Promote to SPM.
DMARQUARDT	06-MAY-14 13:11:42	Promote.
DMARQUARDT	06-MAY-14 13:11:42	Reviewed and validated. Approve.

AMWTP
Advanced Mixed Waste Treatment Project

AMWTP

Batch Report Coversheet

Date: 22-Sep-2014

Time: 09:02

**********Batch E-Signature History**********

Approval ID	User ID	Signature Date	Comment
2734829	CTIEGS	17-APR-2014 15:53:24	rework complete
2749348	DLEE	06-MAY-2014 09:26:41	Promote to SPM
2749633	DMARQUARDT	06-MAY-2014 13:11:42	Reviewed and validated. Approve.

***** End of Batch Report Coversheet Report *****

AMWTP
Advanced Mixed Waste Treatment Project

AMWTP

Non-Conformance Report

Date: 22-Sep-2014
Time: 09:02

*****Batch NCR(s)*****

Batch Type RTR **Batch ID** RTR14-00067

Trackwise Number	Status	Opened Date	Closed Date

*****Container NCR(s)*****

Container ID *or related Batch ID*	Trackwise Number	Status	Opened Date	Closed Date
10030268	11061	CLOSED	19-OCT-04	17-OCT-05
10001035	9088	CLOSED	16-AUG-04	23-FEB-06
10001163	9088	CLOSED	16-AUG-04	23-FEB-06
10001450	9088	CLOSED	16-AUG-04	23-FEB-06
10001458	9088	CLOSED	16-AUG-04	23-FEB-06
10001510	9088	CLOSED	16-AUG-04	23-FEB-06
10001767	9088	CLOSED	16-AUG-04	23-FEB-06
10002003	9088	CLOSED	16-AUG-04	23-FEB-06
10002039	9088	CLOSED	16-AUG-04	23-FEB-06
10002718	20260	CLOSED	10-JAN-06	20-JAN-06
10002718	37633	CLOSED	31-JAN-08	15-MAY-14
10002718	9088	CLOSED	16-AUG-04	23-FEB-06
10002719	9088	CLOSED	16-AUG-04	23-FEB-06
10002720	9088	CLOSED	16-AUG-04	23-FEB-06
10008301	9088	CLOSED	16-AUG-04	23-FEB-06
10008923	9088	CLOSED	16-AUG-04	23-FEB-06
10008953	9088	CLOSED	16-AUG-04	23-FEB-06
10008971	9088	CLOSED	16-AUG-04	23-FEB-06
10009818	9088	CLOSED	16-AUG-04	23-FEB-06
10009819	9088	CLOSED	16-AUG-04	23-FEB-06
10016313	9088	CLOSED	16-AUG-04	23-FEB-06
10112388	24110	CLOSED	07-OCT-06	06-NOV-06
10112388	84767	OPEN	21-MAR-14	
10207672	25960	CLOSED	08-FEB-07	12-OCT-09
10220409	84769	CLOSED	22-MAR-14	03-JUN-14
10342452	84768	OPEN	21-MAR-14	
10343976	84766	OPEN	21-MAR-14	
BN10002003	9088	CLOSED	16-AUG-04	23-FEB-06
10207672	40256	CLOSED	11-JUL-08	30-JUL-08

*****End of Non-Conformance Report*****

AMWTP
Advanced Mixed Waste Treatment Project

AMWTP

Checklist Report

Date: 22-Sep-2014

Time: 09:02

Batch Id RTR14-00067 **Open Date** 21-MAR-14 **Close Date** 22-MAR-14

Reviewer DENISE LEE **Approval Level** Independent Technical Reviewer

Approval Date 06-MAY-14 **Review Iteration** 1

Question Text	Answer	Requirement	Comment
1. Is the Batch Data Report (BDR) and Quality Assurance (QA) documentation complete with the following: o Real-Time Radiography (RTR) Batch Coversheet o Table of Contents (manual review only) o RTR Analysis reports o Replicate Scan o Replicate Comparison o Independent Observation o ITR checklist (Form-1412, manual review only) o Form-1491, Batch Data Report Supplemental Comment Form (manual review only) o Associated NCRs (referenced in Waste Tracking System [WTS]) o Audio/Video Recording References?	Yes		
2. Are there 20 containers or less in the batch?	Yes		
3. Was the image quality indicator (IQI) satisfactory?	Yes		
4. Does every container in the batch reference an audio/video recording?	Yes		
5. Is there a completed radiography data analysis for each container in the batch?	Yes		
6. Was each RTR Operator qualified at the time of the radiography event?	Yes		
7. Was the data generated in a technically correct manner using the correct revision of INST-OI-12, Real-Time Radiography Operations (Drum)?	Yes		
8. Was the correct procedure and revision documented on all analysis reports?	Yes		
9. Has the E-signature History review been performed?	Yes		
10. Does the RTR operator confirm that the physical form matched the waste stream description and waste matrix code?	Yes		
11. Does the packaging weight plus the net weight equal the gross weight of the container in the estimated waste material parameters?	Yes		
12. Were all entries into the waste material items section assigned to the correct waste material parameters?	Yes		
13. Has the description of rigid liners and layers of confinement been properly documented, as applicable?	Yes		
14. Was the presence or absence of prohibited items properly documented?	Yes		
15. If prohibited items were identified, have appropriate nonconformance reports (NCRs) been generated?	Yes		
16. Were the containers examined between October and April in compliance with the preheat requirements?	Yes		
17. Were all proper units and significant figures used for all reported volumes/weights?	Yes		
18. Was there a valid replicate scan performed (at least one container per day, or once per testing batch, whichever is less frequent)? o Record the container number, the replicate observation date in the comment section of this checklist. o Record any issues or concerns in the batch comment section.	Yes		Replicate Drum 10241045 was exam on 3/21/14. Original Operator enters 95% Fill Factor and the Replicate Operator enters 98% Fill Factor. There were other minor differences between the exams. These don't affect the disposition of the container or the DQOs.
19. Was there a valid Operator Independent Observation (OIO) (not the replicate) performed (at least one container per day, or once per testing batch, whichever is less	Yes		OIO Drum 10031534 was exam 3/22/14. Original Operator enters 70% Fill Factor and the OIO Operator enters 75% Fill Factor. There were

Batch Id RTR14-00067 **Open Date** 21-MAR-14 **Close Date** 22-MAR-14

Reviewer DENISE LEE **Approval Level** Independent Technical Reviewer
Approval Date 06-MAY-14 **Review Iteration** 1

Question Text	Answer	Requirement	Comment
frequent)? o Record the container number and the OIO date in the comment section of this checklist. o Record any issues or concerns in the batch comment section.			minor differences between the exams. These don't affect the disposition of the container or the DQOs.
20. Were any significant differences identified that would affect the original disposition of the replicate and OIO, or affect data quality objectives (DQOs)? If so, ensure an NCR was generated and WTS flagged.	No		
21. Were the RTR quality assurance objectives (QAOs) met? o Precision o Accuracy o Completeness o Comparability	Yes		
22. Were any NCRs generated for containers containing prohibited items, or any non-conforming conditions that failed to meet DQOs or QAOs? o If so, include the NCRs, as appropriate, in the BDR.	Yes		
23. Were the rework requirements clearly identified in WTS or on the BDR?	N/A		No Rework

AMWTP
Advanced Mixed Waste Treatment Project

AMWTP

Checklist Report

Date: 22-Sep-2014

Time: 09:02

Batch Id RTR14-00067 **Open Date** 21-MAR-14 **Close Date** 22-MAR-14

Reviewer DAVE MARQUARDT **Approval Level** SPM Data Validation

Approval Date 06-MAY-14 **Review Iteration** 1

Question Text	Answer	Requirement	Comment
(1) Has the batch received a Data Generation Level Independent Technical Review?	Yes	MP-TRUW-8.2, C3-10b(1)	
(2) Is the Independent Technical Review checklist complete?	Yes	MP-TRUW-8.2, C3-10b(1)	
(3) When identified, were polychlorinated biphenyls (PCBs), mercury, lead, or other hazardous contaminants consistent with the waste stream acceptable knowledge (AK) Summary Report(s) and/or AK documentation?	Yes	MP-TRUW-8.2, C4-3	
(4) Are any ignitable, corrosive, or reactive wastes identified in this waste?	No	MP-TRUW-8.2, C4-3	
(5) Are the packaging configurations identified on the real-time radiography (RTR) consistent with the waste stream AK Summary Report(s) and/or AK documentation?	Yes	MP-TRUW-8.2, C4-3	
(6) Do the containers in this batch contain typical waste items consistent with waste stream AK Summary Report(s) and/or AK documentation?	Yes	MP-TRUW-8.2, C4-3	
(7) Are the Waste Matrix Codes (WMCs) and physical form descriptions consistent with AK?	Yes	MP-TRUW-8.2, C4-3	
(8) Have all AK discrepancies been resolved and have all AK Resolution checklists been approved? Reference all waste stream AK documentation used in review of this data package.	N/A	MP-TRUW-8.2, C4-3	No discrepancies. RPT-TRUW-05. RPT-TRUW-06. RPT-TRUW-12. RPT-TRUW-56.
(9) Have all applicable Quality Assurance Objectives (QAOs) been met, including precision, accuracy, completeness, and comparability, by using the appropriate acceptance criteria for each as specified in MP-TRUW-8.2, Quality Assurance Project Plan Section C3-4? Precision ¿ Verified *prior* to use by tuning precisely enough to demonstrate compliance with QAOs through viewing an image test pattern, as evidenced by a satisfactory Image Quality Indicator (IQI). ¿ Have discrepancies, if any, between radiography operators been reconciled? Accuracy ¿ Use of a target to tune the image for maximum sharpness as evidenced by a satisfactory IQI and by requiring operators to successfully identify 100% of the required items in a training container during initial and subsequent qualifications. Completeness ¿ An audio/videotape (or equivalent media) of the radiography examination and a validated radiography data form will be obtained for 100% of the retrievably stored waste container in the program for all waste containers subject to radiography. Comparability ¿ Use of standardized radiography procedures and operator qualifications	Yes	MP-TRUW-8.2, C3-4a	
(10) Do the waste container contents match the WMC, waste stream description and identify the absence of prohibited items?	Yes	MP-TRUW-8.2, C1-3 and B3-11	
(11) If residual liquids exist in the container, is an estimate of quantity given?	Yes	MP-TRUW-8.2, C1-3	
(12) Do the individual container reports contain the (a) IDC, (b) Waste Matrix Code, (c) audio/video recording reference, (d) gross container weight, (e) waste material parameter weights, and (f) signature and date of examination?	Yes	MP-TRUW-8.2, C1-3 and C3-11a	
(13) Have the IDC, WMC, and/or waste stream for all	Yes	MP-TRUW-8.2, C1-3 and	

Batch Id RTR14-00067 **Open Date** 21-MAR-14 **Close Date** 22-MAR-14

Reviewer DAVE MARQUARDT **Approval Level** SPM Data Validation

Approval Date 06-MAY-14 **Review Iteration** 1

Question Text	Answer	Requirement	Comment
containers in the batch remained the same as originally assigned by the historical designation? If not, note the container number in the comment field and notify the Acceptable Knowledge Expert (AKE) if NCR does not exist on the WMC and IDC change.		C3-4a	
(14) Was a replicate scan performed by an independent operator on at least one container per day or once per testing batch, whichever is less frequent, by a qualified radiography operator that was not involved in the original scan of the waste container?	Yes	MP-TRUW-8.2, B1-3, C3-4a, and C3-10b(1)	
(15) Has an independent observation of one scan (not the replicate) been performed by a qualified operator that was not involved in the original scan of the waste container, at a rate of once per day or once per batch, whichever is less frequent? Record date of observation and any issues or concerns in the comment section.	Yes	MP-TRUW-8.2, C1-3 and C3-4a	OIO Drum 10031534 was examined on 3/22/14. No issues.
(16) Did personnel having current qualifications perform all RTR examinations?	Yes	MP-TRUW-8.1, Appendix F	
(17) Verify the correct procedure and revision number were used for all containers in this batch.	Yes	MP-TRUW-8.2, C3-4a	
(18) Verify the audio and video checks were performed and are satisfactory.	Yes	MP-TRUW-8.2, C3-4a	
(19) Verify that there are 20 or fewer containers in the batch.	Yes	MP-TRUW-8.2, C1-3	
(20) Does the data for all containers within this batch meet the review, validation, and verification requirements? - Are proper units (e.g. Liters or pounds) and significant figure used? - Is the BDR complete (all pages identified in the BDR and numbered accordingly)? - RTR Batch Coversheet - Table of Contents (manual review only) - RTR Analysis reports - Replicate Scan - Replicate Comparison - Independent Observation - Form-1412, ITR checklist - Associated NCRs - Form, 1491, Batch Data Report Supplemental Comment Form, as applicable - Audio/Video Recording References	Yes	MP-TRUW-8.2, C3 10b(2)	
(21) Review all NCR(s) (open and closed). Can the batch be approved?	Yes	MP-TRUW-8.2, C3-13	
(22) Is all data associated with this BDR acceptable for signature release?	Yes	MP-TRUW-8.2, C3 10b(2)	

Batch Id RTR14-00067 **Open Date** 21-MAR-14 **Close Date** 22-MAR-14

Esignature History

Esig Approval ID	User ID	Esig Date	Approval Level	Comments
2749633	DMARQUARDT	06-MAY-14	SPM	Reviewed and validated. Approve.
2749348	DLEE	06-MAY-14	ITR	Promote to SPM.

AMWTP
Advanced Mixed Waste Treatment Project

AMWTP

RTR Analysis Report

Date: 22-Sep-2014
Time: 09:02

Batch Id RTR14-00067 **Container Id** 10241045 **Analysis Id** 0000095991
Container Type A drum, 55 Gallon Drum (17H) **Analysis Status** Pass

RTR Date 21-MAR-2014 12.35 **Gross Weight** 736.470 **Lbs.** **Net Weight** 676.470 **Lbs**
Equipment Z-213-106 **Waste Matrix Code** S3150 **IDC** RF-004 Special Setups
Recording Id 2RTR14-00043 **Procedure Id** INST-OI-12 **Revision** 53 **Approval Level** SPM
Is Test Pattern Resolution Ok? Yes **Start Side** A **Replicate** No **OIO** No
Audio Visual Ok? Yes **Operator** AATWELL
Result Comment Waste appears to be sludge.

Package

IDC Correct Yes **Recommended IDC** **Summary Category** S3000
Idc Change Reason
Rigid Liner Present? No **LinerType** NO LINER
Liner Punctured? N/A **Sharp Objects?** No
Liner Lid Present? No **Sharp Objects Are Protected?** Yes
Liner Lid Deformed? N/A **Layers Of Confinement** 1
Fill Factor 95
Bag Closure Method Twisted and Taped

Liquids

Liquid Present? No **Internal Container with Liquid** No
Internal Container with Liquid 0 pints **LA Candidate** No
Liquid Between Liner & Drum 0 pints **Containerized Liquid**
Total Liquid Amount 0 pints **Containerized Liquid Amt** 0 pints
Other Liquids 0 pints **Comment**
Prohibited Liquids Present No **Comment**

Contents-Drum or Box

	Value	Comment		Value	Comment
Lead?	No		Mercury Present?	No	
Wet Cell Batteries?	No		Explosives?	No	
Prohibited Compressed Gases?	No		PCBs Present?	No	
Aerosol Cans?	No		PCB Mass (lbs)	0	
Non-Mixed Hazardous Waste Present?	No		Sealed Containers Over 4L?	No	

Non-Radionuclide Pyrophoric Materials Present? No
Waste exhibiting the characteristics of Ignitability, Corrosivity or Reactivity Present? No
Wastes Incompatible with backfill, seal and panel closure materials, container and packaging materials,shipping container or other wastes? No
Impenetrable Dense Objects? No

Waste Material Items

Packaging Materials

Material Item	Quantity	Unit	Unit Wt(lbs)	Item Wt(lbs)
Drum plastic bag	1.000	EACH	1.000	1.000

Waste Items byWeight

Material Item	Quantity	Unit	Unit Wt(lbs)	Item Wt(lbs)

Waste Items by Volume

Material Item	Quantity	Unit	Unit Wt(lbs)	Item Wt(lbs)

Batch Id RTR14-00067 **Container Id** 10241045 **Analysis Id** 0000095991

Waste Parameters

Waste Parameter	Remaining Weight %	Actual Weight Lbs
Iron-based Metals/Alloys	0.000	0.000
Aluminum-based Metals/Alloys	0.000	0.000
Other metals	0.000	0.000
Other Inorganic Materials	0.000	0.000
Cellulosics	0.000	0.000
Rubber	0.000	0.000
Plastic (Waste Materials)	0.000	0.000
Inorganic matrix	100.000	676.470
Organic matrix	0.000	0.000
Soils/gravel	0.000	0.000
Steel (packaging materials)	0.000	59.000
Plastic (packaging materials)	0.000	1.000
Cellulosics Packaging	0.000	0.000
MLLW Waste	0.000	0.000

Analysis Esignature History

Esig Approval Id	User Id	Esignature Date	Comment
2720269	AATWELL	21-MAR-2014 12:35	

AMWTP
Advanced Mixed Waste Treatment Project

AMWTP
RTR Analysis Report

Date: 22-Sep-2014
Time: 09:02

Batch Id RTR14-00067 **Container Id** 10109274 **Analysis Id** 0000095992
Container Type A drum, 55 Gallon Drum (17H) **Analysis Status** Pass

RTR Date 21-MAR-2014 13:09 **Gross Weight** 231.525 Lbs. **Net Weight** 154.525 Lbs
Equipment Z-213-106 **Waste Matrix Code** S3150 **IDC** RF-292 Cemented Sludge
Recording Id 2RTR14-00043 **Procedure Id** INST-OI-12 **Revision** 53 **Approval Level** SPM
Is Test Pattern Resolution Ok? Yes **Start Side** A **Replicate** No **OIO** No
Audio Visual Ok? Yes **Operator** FKUCK
Result Comment Waste appears to be sludge.

Package

IDC Correct Yes **Recommended IDC** **Summary Category** S3000
Idc Change Reason
Rigid Liner Present? Yes **LinerType** TYPE I
Liner Punctured? Yes **Sharp Objects?** No
Liner Lid Present? Yes **Sharp Objects Are Protected?** Yes
Liner Lid Deformed? No **Layers Of Confinement** 3
Fill Factor 90
Bag Closure Method Twisted and Taped

Liquids

Liquid Present? Yes **Internal Container with Liquid** No
Internal Container with Liquid 0 pints **LA Candidate** No
Liquid Between Liner & Drum 0 pints **Containerized Liquid**
Total Liquid Amount .06 pints **Containerized Liquid Amt** 0 pints
Other Liquids .06 pints **Comment** 2 Tablespoons in bagging near the top of the waste
Prohibited Liquids Present No **Comment**

Contents-Drum or Box

	Value	Comment		Value	Comment
Lead?	No		Mercury Present?	No	
Wet Cell Batteries?	No		Explosives?	No	
Prohibited Compressed Gases?	No		PCBs Present?	No	
Aerosol Cans?	No		PCB Mass (lbs)	0	
Non-Mixed Hazardous Waste Present?	No		Sealed Containers Over 4L?	No	

Non-Radionuclide Pyrophoric Materials Present? No
Waste exhibiting the characteristics of Ignitability, Corrosivity or Reactivity Present? No
Wastes Incompatible with backfill, seal and panel closure materials, container and packaging materials,shipping container or other wastes? No
Impenetrable Dense Objects? No

Waste Material Items

Packaging Materials

Material Item	Quantity	Unit	Unit Wt(lbs)	Item Wt(lbs)
90 mil liner	1.000	EACH	16.000	16.000
Drum plastic bag	2.000	EACH	1.000	2.000

Waste Items byWeight

Material Item	Quantity	Unit	Unit Wt(lbs)	Item Wt(lbs)
Plastic bag for waste	5.000	EACH	0.250	1.250
1 Gal. Paint Can w/ Lid	15.000	EACH	0.840	12.600

Waste Items by Volume

Material Item	Quantity	Unit	Unit Wt(lbs)	Item Wt(lbs)
Oil-Dri (Inside 55 gal drum)	6.000	PINTS	0.420	2.520
Liquids for Inorganic Matrix	0.060	PINTS	1.000	0.060

Batch Id RTR14-00067 **Container Id** 10109274 **Analysis Id** 0000095992

Waste Parameters

Waste Parameter	Remaining Weight %	Actual Weight Lbs
Iron-based Metals/Alloys	0.000	12.600
Aluminum-based Metals/Alloys	0.000	0.000
Other metals	0.000	0.000
Other Inorganic Materials	0.000	2.520
Cellulosics	0.000	0.000
Rubber	0.000	0.000
Plastic (Waste Materials)	0.000	1.250
Inorganic matrix	100.000	138.155
Organic matrix	0.000	0.000
Soils/gravel	0.000	0.000
Steel (packaging materials)	0.000	59.000
Plastic (packaging materials)	0.000	18.000
Cellulosics Packaging	0.000	0.000
MLLW Waste	0.000	0.000

Analysis Esignature History

Esig Approval Id	User Id	Esignature Date	Comment
2720272	FKUCK	21-MAR-2014 13:09	

AMWTP
Advanced Mixed Waste Treatment Project

AMWTP
RTR Analysis Report

Date: 22-Sep-2014
Time: 09:02

Batch Id RTR14-00067 **Container Id** 10002718 **Analysis Id** 0000095993
Container Type A drum, 55 Gallon Drum (17H) **Analysis Status** Pass

RTR Date 21-MAR-2014 13:34 **Gross Weight** 571.100 Lbs. **Net Weight** 494.100 Lbs
Equipment Z-213-106 **Waste Matrix Code** S3150 **IDC** RF-004 Special Setups
Recording Id 2RTR14-00043 **Procedure Id** INST-OI-12 **Revision** 53 **Approval Level** SPM
Is Test Pattern Resolution Ok? Yes **Start Side** A **Replicate** No **OIO** No
Audio Visual Ok? Yes **Operator** FKUCK

Result Comment Waste appears to be sludge.
AK concurs with the recommended IDC, RF-004, for container 10002718. No AKR or NCR is necessary. CHD 04/14/14

Package

IDC Correct Yes **Recommended IDC** RF-004 **Summary Category** S3000
Idc Change Reason Per NCR 37633
Rigid Liner Present? Yes **LinerType** TYPE I
Liner Punctured? Yes **Sharp Objects?** No
Liner Lid Present? Yes **Sharp Objects Are Protected?** Yes
Liner Lid Deformed? No **Layers Of Confinement** 2
Fill Factor 90
Bag Closure Method Twisted and Taped

Liquids

Liquid Present? No
Internal Container with Liquid 0 pints
Liquid Between Liner & Drum 0 pints
Total Liquid Amount 0 pints
Other Liquids 0 pints
Prohibited Liquids Present No
Internal Container with Liquid No
LA Candidate No
Containerized Liquid
Containerized Liquid Amt 0 pints
Comment
Comment

Contents-Drum or Box

	Value	Comment		Value	Comment
Lead?	No		Mercury Present?	No	
Wet Cell Batteries?	No		Explosives?	No	
Prohibited Compressed Gases?	No		PCBs Present?	No	
Aerosol Cans?	No		PCB Mass (lbs)	0	
Non-Mixed Hazardous Waste Present?	No		Sealed Containers Over 4L?	No	

Non-Radionuclide Pyrophoric Materials Present? No
Waste exhibiting the characteristics of Ignitability, Corrosivity or Reactivity Present? No
Wastes Incompatible with backfill, seal and panel closure materials, container and packaging materials,shipping container or other wastes? No
Impenetrable Dense Objects? No

Waste Material Items

Packaging Materials

Material Item	Quantity	Unit	Unit Wt(lbs)	Item Wt(lbs)
90 mil liner	1.000	EACH	16.000	16.000
Drum plastic bag	2.000	EACH	1.000	2.000

Waste Items byWeight

Material Item	Quantity	Unit	Unit Wt(lbs)	Item Wt(lbs)

Waste Items by Volume

Material Item	Quantity	Unit	Unit Wt(lbs)	Item Wt(lbs)
Oil-Dri (Inside 55 gal drum)	8.000	PINTS	0.420	3.360

Batch Id RTR14-00067 **Container Id** 10002718 **Analysis Id** 0000095993

Waste Parameters

Waste Parameter	Remaining Weight %	Actual Weight Lbs
Iron-based Metals/Alloys	0.000	0.000
Aluminum-based Metals/Alloys	0.000	0.000
Other metals	0.000	0.000
Other Inorganic Materials	0.000	3.360
Cellulosics	0.000	0.000
Rubber	0.000	0.000
Plastic (Waste Materials)	0.000	0.000
Inorganic matrix	100.000	490.740
Organic matrix	0.000	0.000
Soils/gravel	0.000	0.000
Steel (packaging materials)	0.000	59.000
Plastic (packaging materials)	0.000	18.000
Cellulosics Packaging	0.000	0.000
MLLW Waste	0.000	0.000

Analysis Esignature History

Esig Approval Id	User Id	Esignature Date	Comment
2732220	CHINKLE	14-APR-2014 10:30	This batch is returned for rework. AK does not concur with the recommended IDC change for container 10342646. CHD 04/14/14
2720293	FKUCK	21-MAR-2014 13:34	

AMWTP
Advanced Mixed Waste Treatment Project

AMWTP
RTR Analysis Report

Date: 22-Sep-2014
Time: 09:02

Batch Id RTR14-00067 **Container Id** 10241045 **Analysis Id** 0000095994
Container Type A drum, 55 Gallon Drum (17H) **Analysis Status** Pass

RTR Date 21-MAR-2014 13:45 **Gross Weight** 736.470 Lbs. **Net Weight** 676.470 Lbs
Equipment Z-213-106 **Waste Matrix Code** S3150 **IDC** RF-004 Special Setups
Recording Id 2RTR14-00043 **Procedure Id** INST-OI-12 **Revision** 53 **Approval Level** SPM
Is Test Pattern Resolution Ok? Yes **Start Side** A **Replicate** Yes **OIO** No
Audio Visual Ok? Yes **Operator** FKUCK
Result Comment Waste appears to be sludge.

Package

IDC Correct Yes **Recommended IDC** **Summary Category** S3000
Idc Change Reason
Rigid Liner Present? No **LinerType** NO LINER
Liner Punctured? N/A **Sharp Objects?** No
Liner Lid Present? No **Sharp Objects Are Protected?** Yes
Liner Lid Deformed? N/A **Layers Of Confinement** 1
Fill Factor 98
Bag Closure Method Twisted and Taped

Liquids

Liquid Present? No **Internal Container with Liquid** No
Internal Container with Liquid 0 pints **LA Candidate** No
Liquid Between Liner & Drum 0 pints **Containerized Liquid**
Total Liquid Amount 0 pints **Containerized Liquid Amt** 0 pints
Other Liquids 0 pints **Comment**
Prohibited Liquids Present No **Comment**

Contents-Drum or Box

	Value	Comment		Value	Comment
Lead?	No		Mercury Present?	No	
Wet Cell Batteries?	No		Explosives?	No	
Prohibited Compressed Gases?	No		PCBs Present?	No	
Aerosol Cans?	No		PCB Mass (lbs)	0	
Non-Mixed Hazardous Waste Present?	No		Sealed Containers Over 4L?	No	

Non-Radionuclide Pyrophoric Materials Present? No
Waste exhibiting the characteristics of Ignitability, Corrosivity or Reactivity Present? No
Wastes Incompatible with backfill, seal and panel closure materials, container and packaging materials,shipping container or other wastes? No
Impenetrable Dense Objects? No

Waste Material Items

Packaging Materials

Material Item	Quantity	Unit	Unit Wt(lbs)	Item Wt(lbs)
Drum plastic bag	1.000	EACH	1.000	1.000

Waste Items byWeight

Material Item	Quantity	Unit	Unit Wt(lbs)	Item Wt(lbs)

Waste Items by Volume

Material Item	Quantity	Unit	Unit Wt(lbs)	Item Wt(lbs)
Oil-Dri (Inside 55 gal drum)	16.000	PINTS	0.420	6.720

Batch Id RTR14-00067 **Container Id** 10241045 **Analysis Id** 0000095994

Waste Parameters

Waste Parameter	Remaining Weight %	Actual Weight Lbs
Iron-based Metals/Alloys	0.000	0.000
Aluminum-based Metals/Alloys	0.000	0.000
Other metals	0.000	0.000
Other Inorganic Materials	0.000	6.720
Cellulosics	0.000	0.000
Rubber	0.000	0.000
Plastic (Waste Materials)	0.000	0.000
Inorganic matrix	100.000	669.750
Organic matrix	0.000	0.000
Soils/gravel	0.000	0.000
Steel (packaging materials)	0.000	59.000
Plastic (packaging materials)	0.000	1.000
Cellulosics Packaging	0.000	0.000
MLLW Waste	0.000	0.000

Analysis Esignature History

Esig Approval Id	User Id	Esignature Date	Comment
2720316	FKUCK	21-MAR-2014 13:45	

AMWTP
Advanced Mixed Waste Treatment Project

AMWTP
RTR Analysis Report

Date: 22-Sep-2014
Time: 09:02

Batch Id RTR14-00067 **Container Id** 10344147 **Analysis Id** 0000095996
Container Type A drum, 55 Gallon Drum (17H) **Analysis Status** Pass

RTR Date 21-MAR-2014 14:19 **Gross Weight** 158.760 Lbs. **Net Weight** 97.760 Lbs
Equipment Z-213-106 **Waste Matrix Code** S5390 **IDC** RF-900 LSA Paper, Plastic, etc.
Recording Id 2RTR14-00043 **Procedure Id** INST-OI-12 **Revision** 53 **Approval Level** SPM
Is Test Pattern Resolution Ok? Yes **Start Side** A **Replicate** No **OIO** No
Audio Visual Ok? Yes **Operator** FKUCK

Result Comment Waste consists of cloth coveralls, towels and wipes.

Package

IDC Correct Yes **Recommended IDC** **Summary Category** S5000
Idc Change Reason
Rigid Liner Present? No **LinerType** NO LINER
Liner Punctured? N/A **Sharp Objects?** No
Liner Lid Present? No **Sharp Objects Are Protected?** Yes
Liner Lid Deformed? N/A **Layers Of Confinement** 2
Fill Factor 75
Bag Closure Method Twisted and Taped

Liquids

Liquid Present? No **Internal Container with Liquid** No
Internal Container with Liquid 0 pints **LA Candidate** No
Liquid Between Liner & Drum 0 pints **Containerized Liquid**
Total Liquid Amount 0 pints **Containerized Liquid Amt** 0 pints
Other Liquids 0 pints **Comment**
Prohibited Liquids Present No **Comment**

Contents-Drum or Box

	Value	Comment		Value	Comment
Lead?	No		Mercury Present?	No	
Wet Cell Batteries?	No		Explosives?	No	
Prohibited Compressed Gases?	No		PCBs Present?	No	
Aerosol Cans?	No		PCB Mass (lbs)	0	
Non-Mixed Hazardous Waste Present?	No		Sealed Containers Over 4L?	No	

Non-Radionuclide Pyrophoric Materials Present? No
Waste exhibiting the characteristics of Ignitability, Corrosivity or Reactivity Present? No
Wastes Incompatible with backfill, seal and panel closure materials, container and packaging materials,shipping container or other wastes? No
Impenetrable Dense Objects? No

Waste Material Items

Packaging Materials

Material Item	Quantity	Unit	Unit Wt(lbs)	Item Wt(lbs)
Drum plastic bag	2.000	EACH	1.000	2.000

Waste Items byWeight

Material Item	Quantity	Unit	Unit Wt(lbs)	Item Wt(lbs)

Waste Items by Volume

Material Item	Quantity	Unit	Unit Wt(lbs)	Item Wt(lbs)
Oil-Dri (Inside 55 gal drum)	12.000	PINTS	0.420	5.040

Batch Id RTR14-00067 **Container Id** 10344147 **Analysis Id** 0000095996

Waste Parameters

Waste Parameter	Remaining Weight %	Actual Weight Lbs
Iron-based Metals/Alloys	0.000	0.000
Aluminum-based Metals/Alloys	0.000	0.000
Other metals	0.000	0.000
Other Inorganic Materials	0.000	5.040
Cellulosics	100.000	92.720
Rubber	0.000	0.000
Plastic (Waste Materials)	0.000	0.000
Inorganic matrix	0.000	0.000
Organic matrix	0.000	0.000
Soils/gravel	0.000	0.000
Steel (packaging materials)	0.000	59.000
Plastic (packaging materials)	0.000	2.000
Cellulosics Packaging	0.000	0.000
MLLW Waste	0.000	0.000

Analysis Esignature History

Esig Approval Id	User Id	Esignature Date	Comment
2720377	FKUCK	21-MAR-2014 14:19	

AMWTP
Advanced Mixed Waste Treatment Project

AMWTP
RTR Analysis Report

Date: 22-Sep-2014
Time: 09:02

Batch Id RTR14-00067 **Container Id** 10342956 **Analysis Id** 0000096002
Container Type A drum, 55 Gallon Drum (17H) **Analysis Status** Pass

RTR Date 21-MAR-2014 14:38 **Gross Weight** 183.015 Lbs. **Net Weight** 122.015 Lbs
Equipment Z-213-106 **Waste Matrix Code** S5300 **IDC** RF-336 Paper and Rags-Moist
Recording Id 2RTR14-00043 **Procedure Id** INST-OI-12 **Revision** 53 **Approval Level** SPM
Is Test Pattern Resolution Ok? Yes **Start Side** A **Replicate** No **OIO** No
Audio Visual Ok? Yes **Operator** FKUCK
Result Comment Waste consists primarily of towels, wipes and coveralls.

Package

IDC Correct Yes **Recommended IDC** **Summary Category** S5000
Idc Change Reason
Rigid Liner Present? No **LinerType** NO LINER
Liner Punctured? N/A **Sharp Objects?** No
Liner Lid Present? No **Sharp Objects Are Protected?** Yes
Liner Lid Deformed? N/A **Layers Of Confinement** 2
Fill Factor 95
Bag Closure Method Twisted and Taped

Liquids

Liquid Present? Yes **Internal Container with Liquid** Yes
Internal Container with Liquid 19 pints **LA Candidate** No
Liquid Between Liner & Drum 0 pints **Containerized Liquid**
Total Liquid Amount 19 pints **Containerized Liquid Amt** 0 pints
Other Liquids 0 pints **Comment** multiple polybottles throughout the waste with a small amount of liquid in them.
Prohibited Liquids Present No **Comment**

Contents-Drum or Box

	Value	Comment		Value	Comment
Lead?	No		Mercury Present?	No	
Wet Cell Batteries?	No		Explosives?	No	
Prohibited Compressed Gases?	No		PCBs Present?	No	
Aerosol Cans?	No		PCB Mass (lbs)	0	
Non-Mixed Hazardous Waste Present?	No		Sealed Containers Over 4L?	No	

Non-Radionuclide Pyrophoric Materials Present? No
Waste exhibiting the characteristics of Ignitability, Corrosivity or Reactivity Present? No
Wastes Incompatible with backfill, seal and panel closure materials, container and packaging materials,shipping container or other wastes? No
Impenetrable Dense Objects? No

Waste Material Items

Packaging Materials

Material Item	Quantity	Unit	Unit Wt(lbs)	Item Wt(lbs)
Drum plastic bag	2.000	EACH	1.000	2.000

Waste Items byWeight

Material Item	Quantity	Unit	Unit Wt(lbs)	Item Wt(lbs)
metal debris	1.000	EACH	2.000	2.000
polybottles, plastic waste	1.000	EACH	10.000	10.000

Waste Items by Volume

Material Item	Quantity	Unit	Unit Wt(lbs)	Item Wt(lbs)
Oil-Dri (Inside 55 gal drum)	24.000	PINTS	0.420	10.080
Liquids for Other Inorganics	0.190	PINTS	1.000	0.190

Batch Id RTR14-00067 **Container Id** 10342956 **Analysis Id** 0000096002

Waste Parameters

Waste Parameter	Remaining Weight %	Actual Weight Lbs
Iron-based Metals/Alloys	0.000	2.000
Aluminum-based Metals/Alloys	0.000	0.000
Other metals	0.000	0.000
Other Inorganic Materials	0.000	10.270
Cellulosics	100.000	99.745
Rubber	0.000	0.000
Plastic (Waste Materials)	0.000	10.000
Inorganic matrix	0.000	0.000
Organic matrix	0.000	0.000
Soils/gravel	0.000	0.000
Steel (packaging materials)	0.000	59.000
Plastic (packaging materials)	0.000	2.000
Cellulosics Packaging	0.000	0.000
MLLW Waste	0.000	0.000

Analysis Esignature History

Esig Approval Id	User Id	Esignature Date	Comment
2720387	FKUCK	21-MAR-2014 14:38	

AMWTP
Advanced Mixed Waste Treatment Project

AMWTP

RTR Analysis Report

Date: 22-Sep-2014

Time: 09:02

Batch Id RTR14-00067 **Container Id** 10212359 **Analysis Id** 0000096003

Container Type A drum, 55 Gallon Drum (17H) **Analysis Status** Pass

RTR Date 21-MAR-2014 14:56 **Gross Weight** 341.775 Lbs. **Net Weight** 280.775 Lbs

Equipment Z-213-106 **Waste Matrix Code** S3221 **IDC** RF-995 Sewer Sludge

Recording Id 2RTR14-00043 **Procedure Id** INST-OI-12 **Revision** 53 **Approval Level** SPM

Is Test Pattern Resolution Ok? Yes **Start Side** A **Replicate** No **OIO** No

Audio Visual Ok? Yes **Operator** FKUCK

Result Comment Waste appears to be sludge.

Package

IDC Correct Yes **Recommended IDC** **Summary Category** S3000

Idc Change Reason

Rigid Liner Present? No **LinerType** NO LINER

Liner Punctured? N/A **Sharp Objects?** No

Liner Lid Present? No **Sharp Objects Are Protected?** Yes

Liner Lid Deformed? N/A **Layers Of Confinement** 2

Fill Factor 85

Bag Closure Method Twisted and Taped

Liquids

Liquid Present? No **Internal Container with Liquid** No

Internal Container with Liquid 0 pints **LA Candidate** No

Liquid Between Liner & Drum 0 pints **Containerized Liquid**

Total Liquid Amount 0 pints **Containerized Liquid Amt** 0 pints

Other Liquids 0 pints **Comment**

Prohibited Liquids Present No **Comment**

Contents-Drum or Box

	Value	Comment		Value	Comment
Lead?	No		**Mercury Present?**	No	
Wet Cell Batteries?	No		**Explosives?**	No	
Prohibited Compressed Gases?	No		**PCBs Present?**	No	
Aerosol Cans?	No		**PCB Mass (lbs)**	0	
Non-Mixed Hazardous Waste Present?	No		**Sealed Containers Over 4L?**	No	

Non-Radionuclide Pyrophoric Materials Present? No

Waste exhibiting the characteristics of Ignitability, Corrosivity or Reactivity Present? No

Wastes Incompatible with backfill, seal and panel closure materials, container and packaging materials,shipping container or other wastes? No

Impenetrable Dense Objects? No

Waste Material Items

Packaging Materials

Material Item	Quantity	Unit	Unit Wt(lbs)	Item Wt(lbs)
Drum plastic bag	2.000	EACH	1.000	2.000

Waste Items byWeight

Material Item	Quantity	Unit	Unit Wt(lbs)	Item Wt(lbs)
Cardboard liner	1.000	EACH	4.000	4.000

Waste Items by Volume

Material Item	Quantity	Unit	Unit Wt(lbs)	Item Wt(lbs)
Oil-Dri (Inside 55 gal drum)	12.000	PINTS	0.420	5.040

AMWTP
Advanced Mixed Waste Treatment Project

AMWTP

RTR Analysis Report

Date: 22-Sep-2014

Time: 09:02

Batch Id RTR14-00067 **Container Id** 10212359 **Analysis Id** 0000096003

Waste Parameters

Waste Parameter	Remaining Weight %	Actual Weight Lbs
Iron-based Metals/Alloys	0.000	0.000
Aluminum-based Metals/Alloys	0.000	0.000
Other metals	0.000	0.000
Other Inorganic Materials	0.000	5.040
Cellulosics	0.000	4.000
Rubber	0.000	0.000
Plastic (Waste Materials)	0.000	0.000
Inorganic matrix	0.000	0.000
Organic matrix	100.000	271.735
Soils/gravel	0.000	0.000
Steel (packaging materials)	0.000	59.000
Plastic (packaging materials)	0.000	2.000
Cellulosics Packaging	0.000	0.000
MLLW Waste	0.000	0.000

Analysis Esignature History

Esig Approval Id	User Id	Esignature Date	Comment
2720397	FKUCK	21-MAR-2014 14:56	

AMWTP
Advanced Mixed Waste Treatment Project

AMWTP
RTR Analysis Report

Date: 22-Sep-2014
Time: 09:02

Batch Id RTR14-00067 **Container Id** 10343976 **Analysis Id** 0000096004
Container Type A drum, 55 Gallon Drum (17H) **Analysis Status** Pass

RTR Date 21-MAR-2014 15:11 **Gross Weight** 407.925 Lbs. **Net Weight** 346.925 Lbs
Equipment Z-213-106 **Waste Matrix Code** S5490 **IDC** RF-950 LSA Metals, Glass, etc.
Recording Id 2RTR14-00043 **Procedure Id** INST-OI-12 **Revision** 53 **Approval Level** SPM
Is Test Pattern Resolution Ok? Yes **Start Side** A **Replicate** No **OIO** No
Audio Visual Ok? Yes **Operator** FKUCK
Result Comment Waste consists of crushed glass and lightbulbs

Package

IDC Correct Yes **Recommended IDC** **Summary Category** S5000
Idc Change Reason
Rigid Liner Present? No **LinerType** NO LINER
Liner Punctured? N/A **Sharp Objects?** Yes
Liner Lid Present? No **Sharp Objects Are Protected?** Yes
Liner Lid Deformed? N/A **Layers Of Confinement** 2
Fill Factor 80
Bag Closure Method Twisted and Taped

Liquids

Liquid Present? No **Internal Container with Liquid** No
Internal Container with Liquid 0 pints **LA Candidate** No
Liquid Between Liner & Drum 0 pints **Containerized Liquid**
Total Liquid Amount 0 pints **Containerized Liquid Amt** 0 pints
Other Liquids 0 pints **Comment**
Prohibited Liquids Present No **Comment**

Contents-Drum or Box

	Value	Comment		Value	Comment
Lead?	No		Mercury Present?	No	
Wet Cell Batteries?	No		Explosives?	No	
Prohibited Compressed Gases?	No		PCBs Present?	No	
Aerosol Cans?	No		PCB Mass (lbs)	0	
Non-Mixed Hazardous Waste Present?	No		Sealed Containers Over 4L?	No	

Non-Radionuclide Pyrophoric Materials Present? No
Waste exhibiting the characteristics of Ignitability, Corrosivity or Reactivity Present? No
Wastes Incompatible with backfill, seal and panel closure materials, container and packaging materials,shipping container or other wastes? No
Impenetrable Dense Objects? Yes - Unacceptable crushed glass

Waste Material Items

Packaging Materials

Material Item	Quantity	Unit	Unit Wt(lbs)	Item Wt(lbs)
Drum plastic bag	2.000	EACH	1.000	2.000

Waste Items byWeight

Material Item	Quantity	Unit	Unit Wt(lbs)	Item Wt(lbs)
Cardboard liner	1.000	EACH	4.000	4.000

Waste Items by Volume

Material Item	Quantity	Unit	Unit Wt(lbs)	Item Wt(lbs)
Oil-Dri (Inside 55 gal drum)	8.000	PINTS	0.420	3.360

Batch Id RTR14-00067 **Container Id** 10343976 **Analysis Id** 0000096004

Waste Parameters

Waste Parameter	Remaining Weight %	Actual Weight Lbs
Iron-based Metals/Alloys	0.000	0.000
Aluminum-based Metals/Alloys	0.000	0.000
Other metals	0.000	0.000
Other Inorganic Materials	100.000	342.925
Cellulosics	0.000	4.000
Rubber	0.000	0.000
Plastic (Waste Materials)	0.000	0.000
Inorganic matrix	0.000	0.000
Organic matrix	0.000	0.000
Soils/gravel	0.000	0.000
Steel (packaging materials)	0.000	59.000
Plastic (packaging materials)	0.000	2.000
Cellulosics Packaging	0.000	0.000
MLLW Waste	0.000	0.000

Analysis Esignature History

Esig Approval Id	User Id	Esignature Date	Comment
2720403	FKUCK	21-MAR-2014 15:11	

AMWTP
Advanced Mixed Waste Treatment Project

AMWTP

RTR Analysis Report

Date: 22-Sep-2014
Time: 09:02

Batch Id RTR14-00067 **Container Id** 10341643 **Analysis Id** 0000096006
Container Type A drum, 55 Gallon Drum (17H) **Analysis Status** Pass

RTR Date 21-MAR-2014 16:26 **Gross Weight** 138.915 Lbs. **Net Weight** 77.915 Lbs
Equipment Z-213-106 **Waste Matrix Code** S5300 **IDC** RF-330 Paper and Rags-Dry
Recording Id 2RTR14-00043 **Procedure Id** INST-OI-12 **Revision** 53 **Approval Level** SPM
Is Test Pattern Resolution Ok? Yes **Start Side** A **Replicate** No **OIO** No
Audio Visual Ok? Yes **Operator** FKUCK
Result Comment Waste consists of plastic sheeting and ppe.

Package

IDC Correct Yes **Recommended IDC** **Summary Category** S5000
Idc Change Reason
Rigid Liner Present? No **LinerType** NO LINER
Liner Punctured? N/A **Sharp Objects?** No
Liner Lid Present? No **Sharp Objects Are Protected?** Yes
Liner Lid Deformed? N/A **Layers Of Confinement** 3
Fill Factor 90
Bag Closure Method Twisted and Taped

Liquids

Liquid Present? No **Internal Container with Liquid** No
Internal Container with Liquid 0 pints **LA Candidate** No
Liquid Between Liner & Drum 0 pints **Containerized Liquid**
Total Liquid Amount 0 pints **Containerized Liquid Amt** 0 pints
Other Liquids 0 pints **Comment**
Prohibited Liquids Present No **Comment**

Contents-Drum or Box

	Value	Comment		Value	Comment
Lead?	No		Mercury Present?	No	
Wet Cell Batteries?	No		Explosives?	No	
Prohibited Compressed Gases?	No		PCBs Present?	No	
Aerosol Cans?	No		PCB Mass (lbs)	0	
Non-Mixed Hazardous Waste Present?	No		Sealed Containers Over 4L?	No	

Non-Radionuclide Pyrophoric Materials Present? No
Waste exhibiting the characteristics of Ignitability, Corrosivity or Reactivity Present? No
Wastes Incompatible with backfill, seal and panel closure materials, container and packaging materials,shipping container or other wastes? No
Impenetrable Dense Objects? No

Waste Material Items

Packaging Materials

Material Item	Quantity	Unit	Unit Wt(lbs)	Item Wt(lbs)
Drum plastic bag	2.000	EACH	1.000	2.000

Waste Items byWeight

Material Item	Quantity	Unit	Unit Wt(lbs)	Item Wt(lbs)
metal debris	1.000	EACH	3.000	3.000
Cardboard liner	1.000	EACH	4.000	4.000
Plastic bag for waste	1.000	EACH	0.250	0.250

Waste Items by Volume

Material Item	Quantity	Unit	Unit Wt(lbs)	Item Wt(lbs)
Oil-Dri (Inside 55 gal drum)	8.000	PINTS	0.420	3.360

Batch Id RTR14-00067 **Container Id** 10341643 **Analysis Id** 0000096006

Waste Parameters

Waste Parameter	Remaining Weight %	Actual Weight Lbs
Iron-based Metals/Alloys	0.000	3.000
Aluminum-based Metals/Alloys	0.000	0.000
Other metals	0.000	0.000
Other Inorganic Materials	0.000	3.360
Cellulosics	0.000	4.000
Rubber	0.000	0.000
Plastic (Waste Materials)	100.000	67.555
Inorganic matrix	0.000	0.000
Organic matrix	0.000	0.000
Soils/gravel	0.000	0.000
Steel (packaging materials)	0.000	59.000
Plastic (packaging materials)	0.000	2.000
Cellulosics Packaging	0.000	0.000
MLLW Waste	0.000	0.000

Analysis Esignature History

Esig Approval Id	User Id	Esignature Date	Comment
2720419	FKUCK	21-MAR-2014 16:26	

AMWTP
Advanced Mixed Waste Treatment Project

AMWTP

RTR Analysis Report

Date: 22-Sep-2014
Time: 09:02

Batch Id RTR14-00067 **Container Id** 10029340 **Analysis Id** 0000096008
Container Type A drum, 55 Gallon Drum (17H) **Analysis Status** Pass

RTR Date 21-MAR-2014 16:36 **Gross Weight** 624.020 Lbs. **Net Weight** 544.220 Lbs
Equipment Z-213-106 **Waste Matrix Code** S3121 **IDC** MD-836 High Level Sludge/Cement
Recording Id 2RTR14-00043 **Procedure Id** INST-OI-12 **Revision** 53 **Approval Level** SPM
Is Test Pattern Resolution Ok? Yes **Start Side** A **Replicate** No **OIO** No
Audio Visual Ok? Yes **Operator** FKUCK
Result Comment Waste appears to be sludge.

Package

IDC Correct Yes **Recommended IDC** **Summary Category** S3000
Idc Change Reason
Rigid Liner Present? Yes **LinerType** TYPE I
Liner Punctured? Yes **Sharp Objects?** No
Liner Lid Present? No **Sharp Objects Are Protected?** Yes
Liner Lid Deformed? N/A **Layers Of Confinement** 0
Fill Factor 90
Bag Closure Method No Bags

Liquids

Liquid Present? No **Internal Container with Liquid** No
Internal Container with Liquid 0 pints **LA Candidate** No
Liquid Between Liner & Drum 0 pints **Containerized Liquid**
Total Liquid Amount 0 pints **Containerized Liquid Amt** 0 pints
Other Liquids 0 pints **Comment**
Prohibited Liquids Present No **Comment**

Contents-Drum or Box

	Value	Comment		Value	Comment
Lead?	No		Mercury Present?	No	
Wet Cell Batteries?	No		Explosives?	No	
Prohibited Compressed Gases?	No		PCBs Present?	No	
Aerosol Cans?	No		PCB Mass (lbs)	0	
Non-Mixed Hazardous Waste Present?	No		Sealed Containers Over 4L?	No	

Non-Radionuclide Pyrophoric Materials Present? No
Waste exhibiting the characteristics of Ignitability, Corrosivity or Reactivity Present? No
Wastes Incompatible with backfill, seal and panel closure materials, container and packaging materials,shipping container or other wastes? No
Impenetrable Dense Objects? No

Waste Material Items

Packaging Materials

Material Item	Quantity	Unit	Unit Wt(lbs)	Item Wt(lbs)
90 mil liner	1.000	EACH	16.000	16.000
1/2 Inch Plywood Spacer (Packaging)	2.000	EACH	2.400	4.800

Waste Items byWeight

Material Item	Quantity	Unit	Unit Wt(lbs)	Item Wt(lbs)

Waste Items by Volume

Material Item	Quantity	Unit	Unit Wt(lbs)	Item Wt(lbs)

AMWTP
Advanced Mixed Waste Treatment Project

AMWTP

RTR Analysis Report

Date: 22-Sep-2014

Time: 09:02

Batch Id RTR14-00067 **Container Id** 10029340 **Analysis Id** 0000096008

Waste Parameters

Waste Parameter	Remaining Weight %	Actual Weight Lbs
Iron-based Metals/Alloys	0.000	0.000
Aluminum-based Metals/Alloys	0.000	0.000
Other metals	0.000	0.000
Other Inorganic Materials	0.000	0.000
Cellulosics	0.000	0.000
Rubber	0.000	0.000
Plastic (Waste Materials)	0.000	0.000
Inorganic matrix	100.000	544.220
Organic matrix	0.000	0.000
Soils/gravel	0.000	0.000
Steel (packaging materials)	0.000	59.000
Plastic (packaging materials)	0.000	16.000
Cellulosics Packaging	0.000	4.800
MLLW Waste	0.000	0.000

Analysis Esignature History

Esig Approval Id	User Id	Esignature Date	Comment
2720431	FKUCK	21-MAR-2014 16:36	

AMWTP
Advanced Mixed Waste Treatment Project

AMWTP
RTR Analysis Report

Date: 22-Sep-2014
Time: 09:02

Batch Id RTR14-00067 **Container Id** 10112388 **Analysis Id** 0000096011
Container Type A drum, 55 Gallon Drum (17H) **Analysis Status** Pass

RTR Date 21-MAR-2014 16:53 **Gross Weight** 593.145 Lbs. **Net Weight** 516.145 Lbs
Equipment Z-213-106 **Waste Matrix Code** S3121 **IDC** RF-001 First Stage Sludge
Recording Id 2RTR14-00043 **Procedure Id** INST-OI-12 **Revision** 53 **Approval Level** SPM
Is Test Pattern Resolution Ok? Yes **Start Side** A **Replicate** No **OIO** No
Audio Visual Ok? Yes **Operator** FKUCK
Result Comment Waste appears to be sludge.

Package

IDC Correct Yes **Recommended IDC** **Summary Category** S3000
Idc Change Reason
Rigid Liner Present? Yes **LinerType** TYPE I
Liner Punctured? Yes **Sharp Objects?** No
Liner Lid Present? No **Sharp Objects Are Protected?** Yes
Liner Lid Deformed? N/A **Layers Of Confinement** 2
Fill Factor 98
Bag Closure Method Twisted and Taped

Liquids

Liquid Present? Yes **Internal Container with Liquid** No
Internal Container with Liquid 0 pints **LA Candidate** No
Liquid Between Liner & Drum 0 pints **Containerized Liquid**
Containerized Liquid Amt 0 pints
Total Liquid Amount 12 pints
Other Liquids 12 pints **Comment** 12 pints around the waste located just under the middle chine. liquid appears to go to the bottom of the waste.
Prohibited Liquids Present Yes **Comment** > 1% by volume

Contents-Drum or Box

	Value	Comment		Value	Comment
Lead?	No		Mercury Present?	No	
Wet Cell Batteries?	No		Explosives?	No	
Prohibited Compressed Gases?	No		PCBs Present?	No	
Aerosol Cans?	No		PCB Mass (lbs)	0	
Non-Mixed Hazardous Waste Present?	No		Sealed Containers Over 4L?	No	

Non-Radionuclide Pyrophoric Materials Present? No
Waste exhibiting the characteristics of Ignitability, Corrosivity or Reactivity Present? No
Wastes Incompatible with backfill, seal and panel closure materials, container and packaging materials,shipping container or other wastes? No
Impenetrable Dense Objects? No

Waste Material Items

Packaging Materials

Material Item	Quantity	Unit	Unit Wt(lbs)	Item Wt(lbs)
90 mil liner	1.000	EACH	16.000	16.000
Drum plastic bag	2.000	EACH	1.000	2.000

Waste Items byWeight

Material Item	Quantity	Unit	Unit Wt(lbs)	Item Wt(lbs)
NF7DS Filter	1.000	EACH	0.240	0.240
Box Knife	1.000	EACH	0.250	0.250

Waste Items by Volume

Material Item	Quantity	Unit	Unit Wt(lbs)	Item Wt(lbs)
Oil-Dri (Inside 55 gal drum)	12.000	PINTS	0.420	5.040
Liquids for Inorganic Matrix	12.000	PINTS	1.000	12.000

Batch Id RTR14-00067 **Container Id** 10112388 **Analysis Id** 0000096011

Waste Parameters

Waste Parameter	Remaining Weight %	Actual Weight Lbs
Iron-based Metals/Alloys	0.000	0.365
Aluminum-based Metals/Alloys	0.000	0.000
Other metals	0.000	0.000
Other Inorganic Materials	0.000	5.040
Cellulosics	0.000	0.000
Rubber	0.000	0.000
Plastic (Waste Materials)	0.000	0.125
Inorganic matrix	100.000	510.615
Organic matrix	0.000	0.000
Soils/gravel	0.000	0.000
Steel (packaging materials)	0.000	59.000
Plastic (packaging materials)	0.000	18.000
Cellulosics Packaging	0.000	0.000
MLLW Waste	0.000	0.000

Analysis Esignature History

Esig Approval Id	User Id	Esignature Date	Comment
2720438	FKUCK	21-MAR-2014 16:53	

AMWTP
Advanced Mixed Waste Treatment Project

AMWTP

RTR Analysis Report

Date: 22-Sep-2014

Time: 09:02

Batch Id RTR14-00067 **Container Id** 10342452 **Analysis Id** 0000096015

Container Type A drum, 55 Gallon Drum (17H) **Analysis Status** Pass

RTR Date 21-MAR-2014 17:18 **Gross Weight** 568.890 Lbs. **Net Weight** 507.890 Lbs

Equipment Z-213-106 **Waste Matrix Code** S5490 **IDC** RF-960 Concrete, Asphalt, etc.

Recording Id 2RTR14-00043 **Procedure Id** INST-OI-12 **Revision** 53 **Approval Level** SPM

Is Test Pattern Resolution Ok? Yes **Start Side** A **Replicate** No **OIO** No

Audio Visual Ok? Yes **Operator** FKUCK

Result Comment Waste consists of broken concrete.

Package

IDC Correct Yes **Recommended IDC** **Summary Category** S5000

Idc Change Reason

Rigid Liner Present? No **LinerType** NO LINER

Liner Punctured? N/A **Sharp Objects?** Yes

Liner Lid Present? No **Sharp Objects Are Protected?** Yes

Liner Lid Deformed? N/A **Layers Of Confinement** 2

Fill Factor 95

Bag Closure Method Twisted and Taped

Liquids

Liquid Present? Yes **Internal Container with Liquid** Yes

Internal Container with Liquid .01 pints **LA Candidate** No

Liquid Between Liner & Drum 0 pints **Containerized Liquid**

Total Liquid Amount .01 pints **Containerized Liquid Amt** 0 pints

Other Liquids 0 pints **Comment** small amount in a polybottle located on top of the waste.

Prohibited Liquids Present No **Comment**

Contents-Drum or Box

	Value	Comment		Value	Comment
Lead?	No		**Mercury Present?**	No	
Wet Cell Batteries?	No		**Explosives?**	No	
Prohibited Compressed Gases?	No		**PCBs Present?**	No	
Aerosol Cans?	No		**PCB Mass (lbs)**	0	
Non-Mixed Hazardous Waste Present?	No		**Sealed Containers Over 4L?**	No	

Non-Radionuclide Pyrophoric Materials Present? No

Waste exhibiting the characteristics of Ignitability, Corrosivity or Reactivity Present? No

Wastes Incompatible with backfill, seal and panel closure materials, container and packaging materials,shipping container or other wastes? No

Impenetrable Dense Objects? Yes - Unacceptable concrete

Waste Material Items

Packaging Materials

Material Item	Quantity	Unit	Unit Wt(lbs)	Item Wt(lbs)
Drum plastic bag	2.000	EACH	1.000	2.000

Waste Items byWeight

Material Item	Quantity	Unit	Unit Wt(lbs)	Item Wt(lbs)
re-bar	1.000	EACH	10.000	10.000
Cardboard liner	1.000	EACH	4.000	4.000
1 Quart Plastic Container w/ Lid	1.000	EACH	0.140	0.140

Waste Items by Volume

Material Item	Quantity	Unit	Unit Wt(lbs)	Item Wt(lbs)
Liquids for Other Inorganics	0.010	PINTS	1.000	0.010

Batch Id RTR14-00067 **Container Id** 10342452 **Analysis Id** 0000096015

Waste Parameters

Waste Parameter	Remaining Weight %	Actual Weight Lbs
Iron-based Metals/Alloys	0.000	10.000
Aluminum-based Metals/Alloys	0.000	0.000
Other metals	0.000	0.000
Other Inorganic Materials	100.000	493.750
Cellulosics	0.000	4.000
Rubber	0.000	0.000
Plastic (Waste Materials)	0.000	0.140
Inorganic matrix	0.000	0.000
Organic matrix	0.000	0.000
Soils/gravel	0.000	0.000
Steel (packaging materials)	0.000	59.000
Plastic (packaging materials)	0.000	2.000
Cellulosics Packaging	0.000	0.000
MLLW Waste	0.000	0.000

Analysis Esignature History

Esig Approval Id	User Id	Esignature Date	Comment
2720443	FKUCK	21-MAR-2014 17.18	

Batch Id RTR14-00067 **Container Id** 10031534 **Analysis Id** 0000096016

Container Type A drum, 55 Gallon Drum (17H) **Analysis Status** Pass

RTR Date 22-MAR-2014 09:55 **Gross Weight** 447.620 Lbs. **Net Weight** 367.620 Lbs

Equipment Z-213-106 **Waste Matrix Code** S3150 **IDC** RF-004 Special Setups

Recording Id 2RTR14-00043 **Procedure Id** INST-OI-12 **Revision** 53 **Approval Level** SPM

Is Test Pattern Resolution Ok? Yes **Start Side** A **Replicate** No **OIO** No

Audio Visual Ok? Yes **Operator** CBEEBE

Result Comment The remaining waste appears to be sludge. cb.

Package

IDC Correct Yes **Recommended IDC** **Summary Category** S3000

Idc Change Reason

Rigid Liner Present? Yes **LinerType** TYPE 1

Liner Punctured? Yes **Sharp Objects?** No

Liner Lid Present? Yes **Sharp Objects Are Protected?** Yes

Liner Lid Deformed? No **Layers Of Confinement** 2

Fill Factor 70

Bag Closure Method Twisted and Taped

Liquids

Liquid Present? No **Internal Container with Liquid** No

Internal Container with Liquid 0 pints **LA Candidate** No

Liquid Between Liner & Drum 0 pints **Containerized Liquid**

Total Liquid Amount 0 pints **Containerized Liquid Amt** 0 pints

Other Liquids 0 pints **Comment**

Prohibited Liquids Present No **Comment**

Contents-Drum or Box

	Value	Comment		Value	Comment
Lead?	No		**Mercury Present?**	No	
Wet Cell Batteries?	No		**Explosives?**	No	
Prohibited Compressed Gases?	No		**PCBs Present?**	No	
Aerosol Cans?	No		**PCB Mass (lbs)**	0	
Non-Mixed Hazardous Waste Present?	No		**Sealed Containers Over 4L?**	No	

Non-Radionuclide Pyrophoric Materials Present? No

Waste exhibiting the characteristics of Ignitability, Corrosivity or Reactivity Present? No

Wastes Incompatible with backfill, seal and panel closure materials, container and packaging materials,shipping container or other wastes? No

Impenetrable Dense Objects? No

Waste Material Items

Packaging Materials

Material Item	Quantity	Unit	Unit Wt(lbs)	Item Wt(lbs)
90 mil liner	1.000	EACH	16.000	16.000
Drum plastic bag	1.000	EACH	1.000	1.000
O-ring plastic bag	1.000	EACH	4.000	4.000

Waste Items byWeight

Material Item	Quantity	Unit	Unit Wt(lbs)	Item Wt(lbs)

Waste Items by Volume

Material Item	Quantity	Unit	Unit Wt(lbs)	Item Wt(lbs)

Batch Id RTR14-00067 **Container Id** 10031534 **Analysis Id** 0000096016

Waste Parameters

Waste Parameter	Remaining Weight %	Actual Weight Lbs
Iron-based Metals/Alloys	0.000	0.000
Aluminum-based Metals/Alloys	0.000	0.000
Other metals	0.000	0.000
Other Inorganic Materials	0.000	0.000
Cellulosics	0.000	0.000
Rubber	0.000	0.000
Plastic (Waste Materials)	0.000	0.000
Inorganic matrix	100.000	367.620
Organic matrix	0.000	0.000
Soils/gravel	0.000	0.000
Steel (packaging materials)	0.000	59.000
Plastic (packaging materials)	0.000	21.000
Cellulosics Packaging	0.000	0.000
MLLW Waste	0.000	0.000

Analysis Esignature History

Esig Approval Id	User Id	Esignature Date	Comment
2720504	CBEEBE	22-MAR-2014 09:55	

AMWTP
Advanced Mixed Waste Treatment Project

AMWTP
RTR Analysis Report

Date: 22-Sep-2014
Time: 09:02

Batch Id RTR14-00067 **Container Id** 10220409 **Analysis Id** 0000096017
Container Type A drum, 55 Gallon Drum (17H) **Analysis Status** Pass

RTR Date 22-MAR-2014 10:26 **Gross Weight** 438.795 Lbs. **Net Weight** 359.795 Lbs
Equipment Z-213-106 **Waste Matrix Code** S3121 **IDC** RF-002 Second Stage Sludge
Recording Id 2RTR14-00043 **Procedure Id** INST-OI-12 **Revision** 53 **Approval Level** SPM
Is Test Pattern Resolution Ok? Yes **Start Side** A **Replicate** No **OIO** No
Audio Visual Ok? Yes **Operator** CBEEBE
Result Comment The remaining waste appears to be sludge. cb. .

Package

IDC Correct Yes **Recommended IDC** **Summary Category** S3000
Idc Change Reason
Rigid Liner Present? Yes **LinerType** TYPE I
Liner Punctured? Yes **Sharp Objects?** No
Liner Lid Present? Yes **Sharp Objects Are Protected?** Yes
Liner Lid Deformed? No **Layers Of Confinement** 1
Fill Factor 85
Bag Closure Method Twisted and Taped

Liquids

Liquid Present? Yes
Internal Container with Liquid 0 pints
Liquid Between Liner & Drum 0 pints
Total Liquid Amount 6.5 pints
Other Liquids 6.5 pints
Prohibited Liquids Present Yes
Internal Container with Liquid No
LA Candidate No
Containerized Liquid No
Containerized Liquid Amt 0 pints
Comment Approx. 6 1/2 pts. of liquid in bagging at the bottom of the waste.
Comment Liquid > 1% by volume in the bagging.

Contents-Drum or Box

	Value	Comment		Value	Comment
Lead?	No		Mercury Present?	No	
Wet Cell Batteries?	No		Explosives?	No	
Prohibited Compressed Gases?	No		PCBs Present?	No	
Aerosol Cans?	No		PCB Mass (lbs)	0	
Non-Mixed Hazardous Waste Present?	No		Sealed Containers Over 4L?	No	

Non-Radionuclide Pyrophoric Materials Present? No
Waste exhibiting the characteristics of Ignitability, Corrosivity or Reactivity Present? No
Wastes Incompatible with backfill, seal and panel closure materials, container and packaging materials,shipping container or other wastes? No
Impenetrable Dense Objects? No

Waste Material Items

Packaging Materials

Material Item	Quantity	Unit	Unit Wt(lbs)	Item Wt(lbs)
90 mil liner	1.000	EACH	16.000	16.000
O-ring plastic bag	1.000	EACH	4.000	4.000

Waste Items byWeight

Material Item	Quantity	Unit	Unit Wt(lbs)	Item Wt(lbs)

Waste Items by Volume

Material Item	Quantity	Unit	Unit Wt(lbs)	Item Wt(lbs)
Liquids for Inorganic Matrix	6.500	PINTS	1.000	6.500

Batch Id RTR14-00067 **Container Id** 10220409 **Analysis Id** 0000096017

Waste Parameters

Waste Parameter	Remaining Weight %	Actual Weight Lbs
Iron-based Metals/Alloys	0.000	0.000
Aluminum-based Metals/Alloys	0.000	0.000
Other metals	0.000	0.000
Other Inorganic Materials	0.000	0.000
Cellulosics	0.000	0.000
Rubber	0.000	0.000
Plastic (Waste Materials)	0.000	0.000
Inorganic matrix	100.000	359.795
Organic matrix	0.000	0.000
Soils/gravel	0.000	0.000
Steel (packaging materials)	0.000	59.000
Plastic (packaging materials)	0.000	20.000
Cellulosics Packaging	0.000	0.000
MLLW Waste	0.000	0.000

Analysis Esignature History

Esig Approval Id	User Id	Esignature Date	Comment
2720515	CBEEBE	22-MAR-2014 10:26	

AMWTP
Advanced Mixed Waste Treatment Project

AMWTP
RTR Analysis Report

Date: 22-Sep-2014
Time: 09:02

Batch Id RTR14-00067 **Container Id** 10207672 **Analysis Id** 0000096018
Container Type 425 drum, 55 Gallon (UN1A2/X425/S), DOT/WIPP approved **Analysis Status** Pass

RTR Date 22-MAR-2014 10:54 **Gross Weight** 551.250 Lbs. **Net Weight** 475.250 Lbs
Equipment Z-213-106 **Waste Matrix Code** S3150 **IDC** RF-004 Special Setups
Recording Id 2RTR14-00043 **Procedure Id** INST-OI-12 **Revision** 53 **Approval Level** SPM
Is Test Pattern Resolution Ok? Yes **Start Side** A **Replicate** No **OIO** No
Audio Visual Ok? Yes **Operator** CBEEBE

Result Comment The remaining waste appears to be sludge. cb.

Package

IDC Correct Yes **Recommended IDC** **Summary Category** S3000
Idc Change Reason
Rigid Liner Present? Yes **LinerType** TYPE I
Liner Punctured? Yes **Sharp Objects?** No
Liner Lid Present? Yes **Sharp Objects Are Protected?** Yes
Liner Lid Deformed? No **Layers Of Confinement** 1
Fill Factor 90
Bag Closure Method Twisted and Taped

Liquids

Liquid Present? No **Internal Container with Liquid** No
Internal Container with Liquid 0 pints **LA Candidate** No
Liquid Between Liner & Drum 0 pints **Containerized Liquid**
Total Liquid Amount 0 pints **Containerized Liquid Amt** 0 pints
Other Liquids 0 pints **Comment**
Prohibited Liquids Present No **Comment**

Contents-Drum or Box

	Value	Comment		Value	Comment
Lead?	No		Mercury Present?	No	
Wet Cell Batteries?	No		Explosives?	No	
Prohibited Compressed Gases?	No		PCBs Present?	No	
Aerosol Cans?	No		PCB Mass (lbs)	0	
Non-Mixed Hazardous Waste Present?	No		Sealed Containers Over 4L?	No	

Non-Radionuclide Pyrophoric Materials Present? No
Waste exhibiting the characteristics of Ignitability, Corrosivity or Reactivity Present? No
Wastes Incompatible with backfill, seal and panel closure materials, container and packaging materials,shipping container or other wastes? No
Impenetrable Dense Objects? No

Waste Material Items

Packaging Materials

Material Item	Quantity	Unit	Unit Wt(lbs)	Item Wt(lbs)
90 mil liner	1.000	EACH	16.000	16.000
Drum plastic bag	1.000	EACH	1.000	1.000

Waste Items byWeight

Material Item	Quantity	Unit	Unit Wt(lbs)	Item Wt(lbs)

Waste Items by Volume

Material Item	Quantity	Unit	Unit Wt(lbs)	Item Wt(lbs)

Batch Id RTR14-00067 **Container Id** 10207672 **Analysis Id** 0000096018

Waste Parameters

Waste Parameter	Remaining Weight %	Actual Weight Lbs
Iron-based Metals/Alloys	0.000	0.000
Aluminum-based Metals/Alloys	0.000	0.000
Other metals	0.000	0.000
Other Inorganic Materials	0.000	0.000
Cellulosics	0.000	0.000
Rubber	0.000	0.000
Plastic (Waste Materials)	0.000	0.000
Inorganic matrix	100.000	475.250
Organic matrix	0.000	0.000
Soils/gravel	0.000	0.000
Steel (packaging materials)	0.000	59.000
Plastic (packaging materials)	0.000	17.000
Cellulosics Packaging	0.000	0.000
MLLW Waste	0.000	0.000

Analysis Esignature History

Esig Approval Id	User Id	Esignature Date	Comment
2720523	CBEEBE	22-MAR-2014 10:54	

AMWTP
Advanced Mixed Waste Treatment Project

AMWTP
RTR Analysis Report

Date: 22-Sep-2014
Time: 09:02

Batch Id RTR14-00067 **Container Id** 10342646 **Analysis Id** 0000096020
Container Type A drum, 55 Gallon Drum (17H) **Analysis Status** Pass

RTR Date 22-MAR-2014 11:28 **Gross Weight** 152.145 **Lbs.** **Net Weight** 91.145 **Lbs**
Equipment Z-213-106 **Waste Matrix Code** S5490 **IDC** RF-760 RFP Debris
Recording Id 2RTR14-00043 **Procedure Id** INST-OI-12 **Revision** 53 **Approval Level** SPM
Is Test Pattern Resolution Ok? Yes **Start Side** A **Replicate** No **OIO** No
Audio Visual Ok? Yes **Operator** CBEEBE

Result Comment The remaining waste appears to be paper and rags,cardboard, coveralls, PPE, ect.. cb
AK does not concur with the recommended IDC UN-00B for container 10342646 because traveler indicates RF debris. Instead, AK recommends an IDC of RF-760. CHD 04/14/14
Rework recommended IDC RF-760 per AK. CT 04/17/14
AK concurs with the recommended IDC, RF-760, for container 10342646. No AKR or NCR is necessary. CHD 04/21/14

Package

IDC Correct Yes **Recommended IDC** RF-760 **Summary Category** S5000
Idc Change Reason Per AK
Rigid Liner Present? No **LinerType** NO LINER
Liner Punctured? N/A **Sharp Objects?** No
Liner Lid Present? No **Sharp Objects Are Protected?** Yes
Liner Lid Deformed? N/A **Layers Of Confinement** 3
Fill Factor 90
Bag Closure Method Twisted and Taped

Liquids

Liquid Present? Yes **Internal Container with Liquid** Yes
Internal Container with Liquid .01 pints **LA Candidate** No
Liquid Between Liner & Drum 0 pints **Containerized Liquid**
Total Liquid Amount .01 pints **Containerized Liquid Amt** 0 pints
Other Liquids 0 pints **Comment** Approx. 1 tsp. of liquid inside a plastic bottle near the bottom of the waste.
Prohibited Liquids Present No **Comment**

Contents-Drum or Box

	Value	Comment		Value	Comment
Lead?	Yes, Acceptable	Leaded tape	Mercury Present?	No	
Wet Cell Batteries?	No		Explosives?	No	
Prohibited Compressed Gases?	No		PCBs Present?	No	
Aerosol Cans?	No		PCB Mass (lbs)	0	
Non-Mixed Hazardous Waste Present?	No		Sealed Containers Over 4L?	No	

Non-Radionuclide Pyrophoric Materials Present? No
Waste exhibiting the characteristics of Ignitability, Corrosivity or Reactivity Present? No
Wastes Incompatible with backfill, seal and panel closure materials, container and packaging materials,shipping container or other wastes? No
Impenetrable Dense Objects? No

Waste Material Items

Packaging Materials

Material Item	Quantity	Unit	Unit Wt(lbs)	Item Wt(lbs)
Drum plastic bag	2.000	EACH	1.000	2.000

AMWTP
Advanced Mixed Waste Treatment Project

AMWTP

RTR Analysis Report

Date: 22-Sep-2014

Time: 09:02

Batch Id RTR14-00067 **Container Id** 10342646 **Analysis Id** 0000096020

Waste Items byWeight

Material Item	Quantity	Unit	Unit Wt(lbs)	Item Wt(lbs)
"D" cell batteries	2.000	EACH	0.250	0.500
Scrap metal, tools,nuts, bolts, ect..	1.000	EACH	6.000	6.000
Plastic sheeting, bagging, ect..	1.000	EACH	3.000	3.000
Leaded tape	1.000	EACH	0.130	0.130
Cardboard liner	1.000	EACH	4.000	4.000
Plastic bag for waste	1.000	EACH	0.250	0.250
1 Quart Plastic Container w/ Lid	3.000	EACH	0.140	0.420

Waste Items by Volume

Material Item	Quantity	Unit	Unit Wt(lbs)	Item Wt(lbs)
Oil-Dri (Inside 55 gal drum)	12.000	PINTS	0.420	5.040
Liquids for Other Inorganics	0.010	PINTS	1.000	0.010

Waste Parameters

Waste Parameter	Remaining Weight %	Actual Weight Lbs
Iron-based Metals/Alloys	0.000	6.000
Aluminum-based Metals/Alloys	0.000	0.000
Other metals	0.000	0.630
Other Inorganic Materials	0.000	5.050
Cellulosics	100.000	75.795
Rubber	0.000	0.000
Plastic (Waste Materials)	0.000	3.670
Inorganic matrix	0.000	0.000
Organic matrix	0.000	0.000
Soils/gravel	0.000	0.000
Steel (packaging materials)	0.000	59.000
Plastic (packaging materials)	0.000	2.000
Cellulosics Packaging	0.000	0.000
MLLW Waste	0.000	0.000

Analysis Esignature History

Esig Approval Id	User Id	Esignature Date	Comment
2737152	CHINKLE	21-APR-2014 05:25	Batch is promoted. chd 4/21/14
2734827	CTIEGS	17-APR-2014 15:52	rework
2732219	CHINKLE	14-APR-2014 10:30	This batch is returned for rework. AK does not concur with the recommended IDC change for container 10342646. CHD 04/14/14
2720528	CBEEBE	22-MAR-2014 11:28	

AMWTP
Advanced Mixed Waste Treatment Project

AMWTP
RTR Analysis Report

Date: 22-Sep-2014
Time: 09:02

Batch Id RTR14-00067 **Container Id** 10030268 **Analysis Id** 0000096034
Container Type A drum, 55 Gallon Drum (17H) **Analysis Status** Pass

RTR Date 22-MAR-2014 12:24 **Gross Weight** 235.940 **Lbs.** **Net Weight** 159.940 **Lbs**
Equipment Z-213-106 **Waste Matrix Code** S3111 **IDC** RF-421 Ash Heels
Recording Id 2RTR14-00043 **Procedure Id** INST-OI-12 **Revision** 53 **Approval Level** SPM
Is Test Pattern Resolution Ok? Yes **Start Side** A **Replicate** No **OIO** No
Audio Visual Ok? Yes **Operator** CBEEBE
Result Comment The remaining waste appears to be ash in one gallon poly bottles. cb

Package

IDC Correct Yes **Recommended IDC** **Summary Category** S3000
Idc Change Reason
Rigid Liner Present? Yes **LinerType** TYPE 1
Liner Punctured? Yes **Sharp Objects?** No
Liner Lid Present? Yes **Sharp Objects Are Protected?** Yes
Liner Lid Deformed? No **Layers Of Confinement** 3
Fill Factor 60
Bag Closure Method Twisted and Taped

Liquids

Liquid Present? No **Internal Container with Liquid** No
Internal Container with Liquid 0 pints **LA Candidate** No
Liquid Between Liner & Drum 0 pints **Containerized Liquid**
Total Liquid Amount 0 pints **Containerized Liquid Amt** 0 pints
Other Liquids 0 pints **Comment**
Prohibited Liquids Present No **Comment**

Contents-Drum or Box

	Value	Comment		Value	Comment
Lead?	No		**Mercury Present?**	No	
Wet Cell Batteries?	No		**Explosives?**	No	
Prohibited Compressed Gases?	No		**PCBs Present?**	No	
Aerosol Cans?	No		**PCB Mass (lbs)**	0	
Non-Mixed Hazardous Waste Present?	No		**Sealed Containers Over 4L?**	No	

Non-Radionuclide Pyrophoric Materials Present? No
Waste exhibiting the characteristics of Ignitability, Corrosivity or Reactivity Present? No
Wastes Incompatible with backfill, seal and panel closure materials, container and packaging materials,shipping container or other wastes? No
Impenetrable Dense Objects? No

Waste Material Items

Packaging Materials

Material Item	Quantity	Unit	Unit Wt(lbs)	Item Wt(lbs)
90 mil liner	1.000	EACH	16.000	16.000
Drum plastic bag	1.000	EACH	1.000	1.000

Waste Items byWeight

Material Item	Quantity	Unit	Unit Wt(lbs)	Item Wt(lbs)
Plastic bagging,ect..	1.000	EACH	5.000	5.000
Broken glass	1.000	EACH	9.000	9.000
Plastic bag for waste	2.000	EACH	0.250	0.500
Poly bottles (1 gal)	18.000	EACH	1.000	18.000

Waste Items by Volume

Material Item	Quantity	Unit	Unit Wt(lbs)	Item Wt(lbs)
Oil-Dri (Inside 55 gal drum)	8.000	PINTS	0.420	3.360

Batch Id RTR14-00067 **Container Id** 10030268 **Analysis Id** 0000096034

Waste Parameters

Waste Parameter	Remaining Weight %	Actual Weight Lbs
Iron-based Metals/Alloys	0.000	0.000
Aluminum-based Metals/Alloys	0.000	0.000
Other metals	0.000	0.000
Other Inorganic Materials	100.000	136.440
Cellulosics	0.000	0.000
Rubber	0.000	0.000
Plastic (Waste Materials)	0.000	23.500
Inorganic matrix	0.000	0.000
Organic matrix	0.000	0.000
Soils/gravel	0.000	0.000
Steel (packaging materials)	0.000	59.000
Plastic (packaging materials)	0.000	17.000
Cellulosics Packaging	0.000	0.000
MLLW Waste	0.000	0.000

Analysis Esignature History

Esig Approval Id	User Id	Esignature Date	Comment
2720585	CBEEBE	22-MAR-2014 12:24	

Batch Id RTR14-00067 **Container Id** 10031534 **Analysis Id** 0000096035
Container Type A drum, 55 Gallon Drum (17H) **Analysis Status** Pass

RTR Date 22-MAR-2014 13:07 **Gross Weight** 447.620 **Lbs.** **Net Weight** 370.620 **Lbs**
Equipment Z-213-106 **Waste Matrix Code** S3150 **IDC** RF-004 Special Setups
Recording Id 2RTR14-00043 **Procedure Id** INST-OI-12 **Revision** 53 **Approval Level** SPM
Is Test Pattern Resolution Ok? Yes **Start Side** A **Replicate** No **OIO** Yes
Audio Visual Ok? Yes **Operator** DMOORE
Result Comment Waste appears to be sludge

Package

IDC Correct Yes **Recommended IDC** **Summary Category** S3000
Idc Change Reason
Rigid Liner Present? Yes **LinerType** TYPE I
Liner Punctured? Yes **Sharp Objects?** No
Liner Lid Present? Yes **Sharp Objects Are Protected?** Yes
Liner Lid Deformed? No **Layers Of Confinement** 2
Fill Factor 75
Bag Closure Method Twisted and Taped

Liquids

Liquid Present? No **Internal Container with Liquid** No
Internal Container with Liquid 0 pints **LA Candidate** No
Liquid Between Liner & Drum 0 pints **Containerized Liquid**
Total Liquid Amount 0 pints **Containerized Liquid Amt** 0 pints
Other Liquids 0 pints **Comment**
Prohibited Liquids Present No **Comment**

Contents-Drum or Box

	Value	Comment		Value	Comment
Lead?	No		Mercury Present?	No	
Wet Cell Batteries?	No		Explosives?	No	
Prohibited Compressed Gases?	No		PCBs Present?	No	
Aerosol Cans?	No		PCB Mass (lbs)	0	
Non-Mixed Hazardous Waste Present?	No		Sealed Containers Over 4L?	No	

Non-Radionuclide Pyrophoric Materials Present? No
Waste exhibiting the characteristics of Ignitability, Corrosivity or Reactivity Present? No
Wastes Incompatible with backfill, seal and panel closure materials, container and packaging materials,shipping container or other wastes? No
Impenetrable Dense Objects? No

Waste Material Items

Packaging Materials

Material Item	Quantity	Unit	Unit Wt(lbs)	Item Wt(lbs)
90 mil liner	1.000	EACH	16.000	16.000
Drum plastic bag	2.000	EACH	1.000	2.000

Waste Items byWeight

Material Item	Quantity	Unit	Unit Wt(lbs)	Item Wt(lbs)

Waste Items by Volume

Material Item	Quantity	Unit	Unit Wt(lbs)	Item Wt(lbs)

Batch Id RTR14-00067 **Container Id** 10031534 **Analysis Id** 0000096035

Waste Parameters

Waste Parameter	Remaining Weight %	Actual Weight Lbs
Iron-based Metals/Alloys	0.000	0.000
Aluminum-based Metals/Alloys	0.000	0.000
Other metals	0.000	0.000
Other Inorganic Materials	0.000	0.000
Cellulosics	0.000	0.000
Rubber	0.000	0.000
Plastic (Waste Materials)	0.000	0.000
Inorganic matrix	100.000	370.620
Organic matrix	0.000	0.000
Soils/gravel	0.000	0.000
Steel (packaging materials)	0.000	59.000
Plastic (packaging materials)	0.000	18.000
Cellulosics Packaging	0.000	0.000
MLLW Waste	0.000	0.000

RTR Independent Observation

Obsolete	Performed	User Name	Checklist	Answer
No	22-APR-2014 15:37	DLEE	1.Was an independent observation performed?	Yes
			2.Were all items on the recording media identified correctly in WTS?	Yes
			3.Do you agree with the operator?	Yes

Comment OIO Check complete.

Independent Observation Esignature History

Esig Approval Id	User Id	Esignature Date	Comment
2739429	DLEE	22-APR-2014 15:37	OIO Check completed.

Analysis Esignature History

Esig Approval Id	User Id	Esignature Date	Comment
2720586	DMOORE	22-MAR-2014 13:07	

AMWTP
Advanced Mixed Waste Treatment Project

AMWTP
RTR Analysis Report

Date: 22-Sep-2014
Time: 09:02

Batch Id RTR14-00067 **Container Id** 10043863 **Analysis Id** 0000096036
Container Type A drum, 55 Gallon Drum (17H) **Analysis Status** Pass

RTR Date 22-MAR-2014 13:35 **Gross Weight** 132.300 **Lbs.** **Net Weight** 57.300 **Lbs**
Equipment Z-213-106 **Waste Matrix Code** S5000 **IDC** BW-515 Plastics, Paper, Cloth, Etc.
Recording Id 2RTR14-00043 **Procedure Id** INST-OI-12 **Revision** 53 **Approval Level** SPM
Is Test Pattern Resolution Ok? Yes **Start Side** A **Replicate** No **OIO** No
Audio Visual Ok? Yes **Operator** DMOORE
Result Comment Remaining waste appears to be paper, cardboard, rags, and, PPE.

Package

IDC Correct Yes **Recommended IDC** **Summary Category** S5000
Idc Change Reason
Rigid Liner Present? Yes **LinerType** TYPE I
Liner Punctured? Yes **Sharp Objects?** Yes
Liner Lid Present? Yes **Sharp Objects Are Protected?** Yes
Liner Lid Deformed? No **Layers Of Confinement** 1
Fill Factor 90
Bag Closure Method Twisted and Taped

Liquids

Liquid Present? No **Internal Container with Liquid** No
Internal Container with Liquid 0 pints **LA Candidate** No
Liquid Between Liner & Drum 0 pints **Containerized Liquid**
Total Liquid Amount 0 pints **Containerized Liquid Amt** 0 pints
Other Liquids 0 pints **Comment**
Prohibited Liquids Present No **Comment**

Contents-Drum or Box

	Value	Comment		Value	Comment
Lead?	No		Mercury Present?	No	
Wet Cell Batteries?	No		Explosives?	No	
Prohibited Compressed Gases?	No		PCBs Present?	No	
Aerosol Cans?	No		PCB Mass (lbs)	0	
Non-Mixed Hazardous Waste Present?	No		Sealed Containers Over 4L?	No	

Non-Radionuclide Pyrophoric Materials Present? No
Waste exhibiting the characteristics of Ignitability, Corrosivity or Reactivity Present? No
Wastes Incompatible with backfill, seal and panel closure materials, container and packaging materials,shipping container or other wastes? No
Impenetrable Dense Objects? No

Waste Material Items

Packaging Materials

Material Item	Quantity	Unit	Unit Wt(lbs)	Item Wt(lbs)
90 mil liner	1.000	EACH	16.000	16.000

Waste Items byWeight

Material Item	Quantity	Unit	Unit Wt(lbs)	Item Wt(lbs)
round rubber ring	1.000	EACH	1.000	1.000
wire, small rods, nuts, misc metals	1.000	EACH	4.000	4.000
plastic sheeting, bagging, bottles, tubing	1.000	EACH	15.000	15.000
Plastic bag for waste	1.000	EACH	0.250	0.250

Waste Items by Volume

Material Item	Quantity	Unit	Unit Wt(lbs)	Item Wt(lbs)

Batch Id RTR14-00067 **Container Id** 10043863 **Analysis Id** 0000096036

Waste Parameters

Waste Parameter	Remaining Weight %	Actual Weight Lbs
Iron-based Metals/Alloys	0.000	4.000
Aluminum-based Metals/Alloys	0.000	0.000
Other metals	0.000	0.000
Other Inorganic Materials	0.000	0.000
Cellulosics	100.000	37.050
Rubber	0.000	1.000
Plastic (Waste Materials)	0.000	15.250
Inorganic matrix	0.000	0.000
Organic matrix	0.000	0.000
Soils/gravel	0.000	0.000
Steel (packaging materials)	0.000	59.000
Plastic (packaging materials)	0.000	16.000
Cellulosics Packaging	0.000	0.000
MLLW Waste	0.000	0.000

Analysis Esignature History

Esig Approval Id	User Id	Esignature Date	Comment
2720593	DMOORE	22-MAR-2014 13:35	

AMWTP
Advanced Mixed Waste Treatment Project

AMWTP

RTR Analysis Report

Date: 22-Sep-2014
Time: 09:02

Batch Id RTR14-00067 **Container Id** 10242168 **Analysis Id** 0000096037
Container Type A drum, 55 Gallon Drum (17H) **Analysis Status** Pass

RTR Date 22-MAR-2014 13:57 **Gross Weight** 460.845 **Lbs.** **Net Weight** 399.845 **Lbs**
Equipment Z-213-106 **Waste Matrix Code** S3121 **IDC** RF-002 Second Stage Sludge
Recording Id 2RTR14-00043 **Procedure Id** INST-OI-12 **Revision** 53 **Approval Level** SPM
Is Test Pattern Resolution Ok? Yes **Start Side** A **Replicate** No **OIO** No
Audio Visual Ok? Yes **Operator** DMOORE
Result Comment Waste appears to be sludge.

Package

IDC Correct Yes **Recommended IDC** **Summary Category** S3000
Idc Change Reason
Rigid Liner Present? No **LinerType** NO LINER
Liner Punctured? N/A **Sharp Objects?** No
Liner Lid Present? No **Sharp Objects Are Protected?** Yes
Liner Lid Deformed? N/A **Layers Of Confinement** 2
Fill Factor 95
Bag Closure Method Twisted and Taped

Liquids

Liquid Present? Yes **Internal Container with Liquid** No
Internal Container with Liquid 0 pints **LA Candidate** No
Liquid Between Liner & Drum 0 pints **Containerized Liquid**
Total Liquid Amount 2 pints **Containerized Liquid Amt** 0 pints
Other Liquids 2 pints **Comment** Liquid is at bottom of drum
Prohibited Liquids Present No **Comment**

Contents-Drum or Box

	Value	Comment		Value	Comment
Lead?	No		Mercury Present?	No	
Wet Cell Batteries?	No		Explosives?	No	
Prohibited Compressed Gases?	No		PCBs Present?	No	
Aerosol Cans?	No		PCB Mass (lbs)	0	
Non-Mixed Hazardous Waste Present?	No		Sealed Containers Over 4L?	No	

Non-Radionuclide Pyrophoric Materials Present? No
Waste exhibiting the characteristics of Ignitability, Corrosivity or Reactivity Present? No
Wastes Incompatible with backfill, seal and panel closure materials, container and packaging materials,shipping container or other wastes? No
Impenetrable Dense Objects? No

Waste Material Items

Packaging Materials

Material Item	Quantity	Unit	Unit Wt(lbs)	Item Wt(lbs)
Drum plastic bag	2.000	EACH	1.000	2.000

Waste Items byWeight

Material Item	Quantity	Unit	Unit Wt(lbs)	Item Wt(lbs)

Waste Items by Volume

Material Item	Quantity	Unit	Unit Wt(lbs)	Item Wt(lbs)
Liquids for Inorganic Matrix	2.000	PINTS	1.000	2.000
Uncured Cement	15.000	PINTS	3.000	45.000

Batch Id RTR14-00067 **Container Id** 10242168 **Analysis Id** 0000096037

Waste Parameters

Waste Parameter	Remaining Weight %	Actual Weight Lbs
Iron-based Metals/Alloys	0.000	0.000
Aluminum-based Metals/Alloys	0.000	0.000
Other metals	0.000	0.000
Other Inorganic Materials	0.000	45.000
Cellulosics	0.000	0.000
Rubber	0.000	0.000
Plastic (Waste Materials)	0.000	0.000
Inorganic matrix	100.000	354.845
Organic matrix	0.000	0.000
Soils/gravel	0.000	0.000
Steel (packaging materials)	0.000	59.000
Plastic (packaging materials)	0.000	2.000
Cellulosics Packaging	0.000	0.000
MLLW Waste	0.000	0.000

Analysis Esignature History

Esig Approval Id	User Id	Esignature Date	Comment
2720600	DMOORE	22-MAR-2014 13:57	

AMWTP
Advanced Mixed Waste Treatment Project

AMWTP
RTR Analysis Report

Date: 22-Sep-2014
Time: 09:02

Batch Id RTR14-00067 **Container Id** 10217845 **Analysis Id** 0000096039
Container Type A drum, 55 Gallon Drum (17H) **Analysis Status** Pass

RTR Date 22-MAR-2014 14:45 **Gross Weight** 498.330 Lbs. **Net Weight** 422.330 Lbs
Equipment Z-213-106 **Waste Matrix Code** S3150 **IDC** RF-004 Special Setups
Recording Id 2RTR14-00043 **Procedure Id** INST-OI-12 **Revision** 53 **Approval Level** SPM
Is Test Pattern Resolution Ok? Yes **Start Side** A **Replicate** No **OIO** No
Audio Visual Ok? Yes **Operator** DMOORE
Result Comment Waste appears to be sludge.

Package

IDC Correct Yes **Recommended IDC** **Summary Category** S3000
Idc Change Reason
Rigid Liner Present? Yes **LinerType** TYPE I
Liner Punctured? Yes **Sharp Objects?** No
Liner Lid Present? Yes **Sharp Objects Are Protected?** Yes
Liner Lid Deformed? No **Layers Of Confinement** 1
Fill Factor 90
Bag Closure Method Twisted and Taped

Liquids

Liquid Present? No **Internal Container with Liquid** No
Internal Container with Liquid 0 pints **LA Candidate** No
Liquid Between Liner & Drum 0 pints **Containerized Liquid**
Total Liquid Amount 0 pints **Containerized Liquid Amt** 0 pints
Other Liquids 0 pints **Comment**
Prohibited Liquids Present No **Comment**

Contents-Drum or Box

	Value	Comment		Value	Comment
Lead?	No		Mercury Present?	No	
Wet Cell Batteries?	No		Explosives?	No	
Prohibited Compressed Gases?	No		PCBs Present?	No	
Aerosol Cans?	No		PCB Mass (lbs)	0	
Non-Mixed Hazardous Waste Present?	No		Sealed Containers Over 4L?	No	

Non-Radionuclide Pyrophoric Materials Present? No
Waste exhibiting the characteristics of Ignitability, Corrosivity or Reactivity Present? No
Wastes Incompatible with backfill, seal and panel closure materials, container and packaging materials,shipping container or other wastes? No
Impenetrable Dense Objects? No

Waste Material Items

Packaging Materials

Material Item	Quantity	Unit	Unit Wt(lbs)	Item Wt(lbs)
90 mil liner	1.000	EACH	16.000	16.000
Drum plastic bag	1.000	EACH	1.000	1.000

Waste Items byWeight

Material Item	Quantity	Unit	Unit Wt(lbs)	Item Wt(lbs)

Waste Items by Volume

Material Item	Quantity	Unit	Unit Wt(lbs)	Item Wt(lbs)

Batch Id RTR14-00067 **Container Id** 10217845 **Analysis Id** 0000096039

Waste Parameters

Waste Parameter	Remaining Weight %	Actual Weight Lbs
Iron-based Metals/Alloys	0.000	0.000
Aluminum-based Metals/Alloys	0.000	0.000
Other metals	0.000	0.000
Other Inorganic Materials	0.000	0.000
Cellulosics	0.000	0.000
Rubber	0.000	0.000
Plastic (Waste Materials)	0.000	0.000
Inorganic matrix	100.000	422.330
Organic matrix	0.000	0.000
Soils/gravel	0.000	0.000
Steel (packaging materials)	0.000	59.000
Plastic (packaging materials)	0.000	17.000
Cellulosics Packaging	0.000	0.000
MLLW Waste	0.000	0.000

Analysis Esignature History

Esig Approval Id	User Id	Esignature Date	Comment
2720619	DMOORE	22-MAR-2014 14:45	

AMWTP
Advanced Mixed Waste Treatment Project

AMWTP
RTR Analysis Report

Date: 22-Sep-2014
Time: 09:02

Batch Id RTR14-00067 **Container Id** 10241105 **Analysis Id** 0000096040
Container Type A drum, 55 Gallon Drum (17H) **Analysis Status** Pass

RTR Date 22-MAR-2014 15:08 **Gross Weight** 518.175 **Lbs.** **Net Weight** 458.175 **Lbs**
Equipment Z-213-106 **Waste Matrix Code** S3121 **IDC** RF-002 Second Stage Sludge
Recording Id 2RTR14-00043 **Procedure Id** INST-OI-12 **Revision** 53 **Approval Level** SPM
Is Test Pattern Resolution Ok? Yes **Start Side** A **Replicate** No **OIO** No
Audio Visual Ok? Yes **Operator** DMOORE
Result Comment Waste appears to be sludge.

Package

IDC Correct Yes **Recommended IDC** **Summary Category** S3000
Idc Change Reason
Rigid Liner Present? No **LinerType** NO LINER
Liner Punctured? N/A **Sharp Objects?** No
Liner Lid Present? No **Sharp Objects Are Protected?** Yes
Liner Lid Deformed? N/A **Layers Of Confinement** 1
Fill Factor 95
Bag Closure Method Twisted and Taped

Liquids

Liquid Present? Yes
Internal Container with Liquid 0 pints
Liquid Between Liner & Drum 0 pints
Total Liquid Amount 2.5 pints
Other Liquids 2.5 pints
Prohibited Liquids Present No
Internal Container with Liquid No
LA Candidate No
Containerized Liquid
Containerized Liquid Amt 0 pints
Comment Liquid is at bottom 2.0 pints, and last chine .5 pint.
Comment

Contents-Drum or Box

	Value	Comment		Value	Comment
Lead?	No		Mercury Present?	No	
Wet Cell Batteries?	No		Explosives?	No	
Prohibited Compressed Gases?	No		PCBs Present?	No	
Aerosol Cans?	No		PCB Mass (lbs)	0	
Non-Mixed Hazardous Waste Present?	No		Sealed Containers Over 4L?	No	

Non-Radionuclide Pyrophoric Materials Present? No
Waste exhibiting the characteristics of Ignitability, Corrosivity or Reactivity Present? No
Wastes Incompatible with backfill, seal and panel closure materials, container and packaging materials,shipping container or other wastes? No
Impenetrable Dense Objects? No

Waste Material Items

Packaging Materials

Material Item	Quantity	Unit	Unit Wt(lbs)	Item Wt(lbs)
Drum plastic bag	1.000	EACH	1.000	1.000

Waste Items byWeight

Material Item	Quantity	Unit	Unit Wt(lbs)	Item Wt(lbs)

Waste Items by Volume

Material Item	Quantity	Unit	Unit Wt(lbs)	Item Wt(lbs)
Liquids for Inorganic Matrix	2.500	PINTS	1.000	2.500

AMWTP
Advanced Mixed Waste Treatment Project

AMWTP

RTR Analysis Report

Date: 22-Sep-2014

Time: 09:02

Batch Id RTR14-00067 **Container Id** 10241105 **Analysis Id** 0000096040

Waste Parameters

Waste Parameter	Remaining Weight %	Actual Weight Lbs
Iron-based Metals/Alloys	0.000	0.000
Aluminum-based Metals/Alloys	0.000	0.000
Other metals	0.000	0.000
Other Inorganic Materials	0.000	0.000
Cellulosics	0.000	0.000
Rubber	0.000	0.000
Plastic (Waste Materials)	0.000	0.000
Inorganic matrix	100.000	458.175
Organic matrix	0.000	0.000
Soils/gravel	0.000	0.000
Steel (packaging materials)	0.000	59.000
Plastic (packaging materials)	0.000	1.000
Cellulosics Packaging	0.000	0.000
MLLW Waste	0.000	0.000

Analysis Esignature History

Esig Approval Id	User Id	Esignature Date	Comment
2720626	DMOORE	22-MAR-2014 15:08	

------End of RTR Analysis Report------

AMWTP

Advanced Mixed Waste Treatment Project

AMWTP

RTR Replicate Comparison Report

Date: 22-Sep-2014

Time: 09:03

RTR Batch Id: RTR14-00067 **Container Id:** 10241045 **Equipment Id:** Z-213-106

Container type Description: drum, 55 Gallon Drum (17H) Gen-IDC: RF-004 Gross Weight(Lbs): 736.47

	Original Analysis		Replicate Analysis	
Analysis Id / Date:	0000095991	21-MAR-2014 12:35	0000095994	21-MAR-2014 13:45
Procedure /Revision:	INST-OI-12	53	INST-OI-12	53
Recording Media Id:	2RTR14-00043		2RTR14-00043	
Starting Position:	A		A	
Is Test Pattern Resolution Ok?	Y		Y	
Audio Visual Ok?	Y		Y	
Personnel Name:	AARON ATWELL		FRANK KUCK	
IDC Ok? / Recommended IDC:	Y		Y	
IDC Change Reason:				
Summary Category / Waste matrix Code	S3000	S3150	S3000	S3150
Packaging				
Rigid Liner Present?	N		N	
Liner Type Code:	NO LINER		NO LINER	
Liner Punctured:	NA		NA	
Liner Lid Deformed:	NA		NA	
Layers Of Confinement:	1		1	
Sharp Objects?	N		N	
Sharp Objects Protected?	Y		Y	
Fill Factor(%):	95		98	
Bag Closure Method:	Twisted and Taped		Twisted and Taped	
Liner Lid Present?:	N		N	
Liquids: (Volume in Pints)				
Liquid Present?	N		N	
Internal Container with Liquid?	0		0	
Containerized Liquid	N		N	
Other Liquids:	0		0	
Internal Container with Liquid Amt:	0		0	
Liquid Between Liner and Drum:	0		0	
Containerized Liquid:	0		0	
Total Liquid Amount:	0		0	
LA Candidate?	N		N	
Prohibited Liquids Present	N		N	

Contents:	Y/N	Comments	Y/N	Comments
Sealed Containers over 4L?	N		N	
Lead Present?	N		N	
Explosives Present?	N		N	
Mercury Present?	N		N	
Wet Cell Batteries Detected?	N		N	

AMWTP
Advanced Mixed Waste Treatment Project

AMWTP

RTR Replicate Comparison Report

Date: 22-Sep-2014

Time: 09:03

RTR Batch Id: RTR14-00067 **Container Id:** 10241045 **Equipment Id:** Z-213-106

	Original Analysis	Replicate Analysis
Prohibited Compressed Gas Present?	N	N
PCBs Present?	N	N
PCB Mass (lbs)	0	0
Non-Radionuclide Pyrophoric Materials Present?	N	N
Waste exhibiting the characteristics of ignitability, Corrosivity or reactivity Present?	N	N
Non-Mixed Hazardous Waste Present?	N	N
Waste Incompatibles with backfill, Seal and panel closure materials, container and packaging material, shipping container or other wastes?	N	N
Impenetrable Dense Objects?	N	N
Result Comment:	Waste appears to be sludge.	Waste appears to be sludge.

----------E-signature----------

Esig Approval ID	User ID	Signature Date	Comment
2739493	DLEE	22-APR-14	Replicate Comparison completed.

-----End of RTR Replicate Comparison Report-----

AMWTP
Advanced Mixed Waste Treatment Project

AMWTP

RTR OIO Comparison Report

Date: 22-Sep-2014

Time: 09:04

RTR Batch Id: RTR14-00067 **Container Id:** 10031534 **Equipment Id:** Z-213-106

Container type Description: **drum, 55 Gallon Drum (17H)** Gen-IDC: **RF-004** Gross Weight(Lbs): **447.62**

	Original Analysis		OIO Analysis	
Analysis Id / Date:	0000096016	22-MAR-2014 09:55	0000096035	22-MAR-2014 13:07
Procedure /Revision:	INST-OI-12	53	INST-OI-12	53
Recording Media Id:	2RTR14-00043		2RTR14-00043	
Starting Position:	A		A	
Is Test Pattern Resolution Ok?	Y		Y	
Audio Visual Ok?	Y		Y	
Personnel Name:	CONLEY BEEBE		DIANNA MOORE	
IDC Ok? / Recommended IDC:	Y		Y	
IDC Change Reason:				
Summary Category / Waste matrix Code:	S3000	S3150	S3000	S3150
Packaging				
Rigid Liner Present?	Y		Y	
Liner Type Code:	TYPE I		TYPE I	
Liner Punctured:	Y		Y	
Liner Lid Deformed:	N		N	
Layers Of Confinement:	2		2	
Sharp Objects?	N		N	
Sharp Objects Protected?	Y		Y	
Fill Factor(%):	70		75	
Bag Closure Method:	Twisted and Taped		Twisted and Taped	
Liner Lid Present?:	Y		Y	
Liquids: (Volume in Pints)				
Liquid Present?	N		N	
Internal Container with Liquid?	0		0	
Containerized Liquid	N		N	
Other Liquids:	0		0	
Internal Container with Liquid Amt:	0		0	
Liquid Between Liner and Drum:	0		0	
Containerized Liquid:	0		0	
Total Liquid Amount:	0		0	
LA Candidate?	N		N	
Prohibited Liquids Present	N		N	

Contents:	Y/N	Comments	Y/N	Comments
Sealed Containers over 4L?	N		N	
Lead Present?	N		N	
Explosives Present?	N		N	
Mercury Present?	N		N	
Wet Cell Batteries Detected?	N		N	

AMWTP

Advanced Mixed Waste Treatment Project

AMWTP

RTR OIO Comparison Report

Date: 22-Sep-2014

Time: 09:04

RTR Batch Id: RTRI4-00067 **Container Id:** 10031534 **Equipment Id:** Z-213-106

	Original Analysis	OIO Analysis
Prohibited Compressed Gas Present?	N	N
PCBs Present?	N	N
PCB Mass (lbs)	0	0
Non-Radionuclide Pyrophoric Materials Present?	N	N
Waste exhibiting the characteristics of ignitability, Corrosivity or reactivity Present?	N	N
Non-Mixed Hazardous Waste Present?	N	N
Waste Incompatibles with backfill, Seal and panel closure materials, container and packaging material, shipping container or other wastes?	N	N
Impenetrable Dense Objects?	N	N
Result Comment:	The remaining waste appears to be sludge. cb.	Waste appears to be sludge.

----------E-signature----------

Esig Approval ID	User ID	Signature Date	Comment

-----End of RTR OIO Comparison Report-----

AK26

AMWTP

Advanced Mixed Waste Treatment Project

AMWTP

Batch Report Coversheet

Date: 22-Sep-2014

Time: 08:57

Batch Type Real Time Radiography **Batch Report No.** RTR13-00213

Batch Id RTR13-00213 **Open Date** 13-SEP-13 14:20:13 **Close Date** 14-SEP-13 15:32:33

Batch Status AP

Test Facility Idaho AMWTP

Equipment Id Z-213-101 RTR Station Left (213-101)

Container Id	IDC	Analysis Id	Date Examined	QC Type	Analysis Status	Operator
10004363	UN-00B	0000091706	13-SEP-13 14:20:13	Original	P	JACE DUKE
10087288	RF-003	0000091707	13-SEP-13 14:55:01	Original	P	JACE DUKE
10006106	RF-376	0000091709	13-SEP-13 15:11:45	Original	P	JACE DUKE
10006101	RF-376	0000091715	13-SEP-13 16:29:14	Original	P	JACE DUKE
10006065	RF-440	0000091717	13-SEP-13 16:52:15	Original	P	CRAIG SIMMONS
10078811	RF-374	0000091719	14-SEP-13 08:58:30	Original	P	CINDY TIEGS
10078850	RF-374	0000091722	14-SEP-13 09:15:53	Original	P	CINDY TIEGS
10004749	RF-480	0000091724	14-SEP-13 09:30:47	Original	P	CINDY TIEGS
10006010	RF-442	0000091725	14-SEP-13 09:44:41	Original	P	CINDY TIEGS
10078811	RF-374	0000091727	14-SEP-13 10:25:46	Replicate / Duplicate	P	JOHN CUMMINGS
10078850	RF-374	0000091728	14-SEP-13 10:43:16	RTR OIO	P	JOHN CUMMINGS
10120127	RF-003	0000091730	14-SEP-13 11:11:20	Original	P	CINDY TIEGS
10242828	RF-337	0000091732	14-SEP-13 11:27:30	Original	P	CRAIG SIMMONS
10006155		0000091734	14-SEP-13 11:43:31	Original	NR	CINDY TIEGS
10006102	RF-376	0000091736	14-SEP-13 12:03:20	Original	P	CINDY TIEGS
10490232	BN-522	0000091737	14-SEP-13 13:12:24	Original	P	CRAIG SIMMONS
10499030	BN-500	0000091739	14-SEP-13 13:38:39	Original	P	CRAIG SIMMONS
10078659	RF-374	0000091740	14-SEP-13 13:52:02	Original	P	JOHN CUMMINGS
10003289	RF-336	0000091741	14-SEP-13 14:11:37	Original	P	JOHN CUMMINGS
10078795	RF-374	0000091743	14-SEP-13 14:52:01	Original	P	JOHN CUMMINGS
10004612	RF-480	0000091747	14-SEP-13 15:08:26	Original	P	JOHN CUMMINGS
10135267	RF-480	0000091749	14-SEP-13 15:31:33	Original	P	JOHN CUMMINGS

**********Batch Comments**********

Written By	Date	Comment
SPHILLIPS	21-NOV-13 16:10:15	Esigned.
CHINKLE	25-NOV-13 10:33:03	25-NOV-13 CHINKLE AKE batch is promoted. chd 11/25/13
DLEE	28-NOV-13 09:37:49	This batch was validated to MP-TRUW-8.8.
DLEE	29-NOV-13 08:46:42	Rework drum 10490232 Operator needs to correct the Impenetrable Dense Objects from Yes, acceptable to Yes, unacceptable. Please review and correct as necessary.
DLEE	29-NOV-13 08:46:42	Rework drum 10242828 Operator needs to correct the Plastic bag for waste total to one to reflect what is stated on the recording states. Please review and correct as necessary.
DLEE	29-NOV-13 08:46:42	Rework drum 10006065 Operator needs to correct the comment in the Sealed Containers Over 4L section to clam shell containers and add to the Lead section lead glass. In the waste parameters the glass container needs to be removed from the waste item by weight section and "Add Item" of approx. 10lbs of Clamshells with the Identified Layer answered yes into 100% Plastic (Waste Material). Please review and correct as necessary.
DLEE	29-NOV-13 08:46:42	This batch was validated to MP-TRUW-8.8.
DLEE	29-NOV-13 08:46:42	Rework drum 10499030 Operator needs to correct the Fill Factor to 85% due to the waste starts there even if it could be smashed down to 20% Fill Factor. Please review and correct as necessary.
DLEE	29-NOV-13 08:51:34	Demote to Operations for rework.
CSIMMONS	29-NOV-13 09:38:16	Rework complete
DLEE	29-NOV-13 10:23:00	Rework completed to satisfaction. Promote to SPM.
DMARQUARDT	02-DEC-13 15:56:13	Reviewed and validated. Approve.
DMARQUARDT	02-DEC-13 15:56:13	Note: ITR checklist question 16. ITR mistakenly answered "NO" when the correct response should have been "N/A". This RTR batch was both opened and closed in September (as noted by the ITR), so no preheat requirements were in effect. As this does not affect data quality, no rework will be performed.

AMWTP

Advanced Mixed Waste Treatment Project

AMWTP

Batch Report Coversheet

Date: 22-Sep-2014

Time: 08:57

**********Batch E-Signature History**********

Approval ID	User ID	Signature Date	Comment
2658244	SPHILLIPS	21-NOV-2013 16:10:15	
2661233	DLEE	29-NOV-2013 08:51:34	Demote to Operations for rework.
2661253	CSIMMONS	29-NOV-2013 09:38:16	Rework complete
2661262	DLEE	29-NOV-2013 10:23:00	Rework completed to satisfaction. Promote to SPM.
2663750	DMARQUARDT	02-DEC-2013 15:56:13	Reviewed and validated. Approve.

***** End of Batch Report Coversheet Report *****

AMWTP
Advanced Mixed Waste Treatment Project

AMWTP

Non-Conformance Report

Date: 22-Sep-2014
Time: 08:57

*****Batch NCR(s)*****

Batch Type RTR Batch ID RTR13-00213

Trackwise Number	Status	Opened Date	Closed Date

*****Container NCR(s)*****

Container ID or related Batch ID	Trackwise Number	Status	Opened Date	Closed Date
10135267	26056	CLOSED	13-FEB-07	06-APR-07
10004363	7952	CLOSED	13-JUL-04	24-MAY-06
10004363	80573	OPEN	13-SEP-13	
10004363	82524	OPEN	28-NOV-13	
10004380	8651	CLOSED	28-JUL-04	17-DEC-05
10004442	8651	CLOSED	28-JUL-04	17-DEC-05
10004571	8651	CLOSED	28-JUL-04	17-DEC-05
10004586	8651	CLOSED	28-JUL-04	17-DEC-05
10004612	19694	CLOSED	16-DEC-05	13-JAN-06
10004612	8651	CLOSED	28-JUL-04	17-DEC-05
10004749	19695	CLOSED	16-DEC-05	13-JAN-06
10004749	8651	CLOSED	28-JUL-04	17-DEC-05
10004753	8651	CLOSED	28-JUL-04	17-DEC-05
10004810	8651	CLOSED	28-JUL-04	17-DEC-05
10004811	8651	CLOSED	28-JUL-04	17-DEC-05
10004816	8651	CLOSED	28-JUL-04	17-DEC-05
10004827	8651	CLOSED	28-JUL-04	17-DEC-05
10004829	8651	CLOSED	28-JUL-04	17-DEC-05
10005023	8651	CLOSED	28-JUL-04	17-DEC-05
10005033	8651	CLOSED	28-JUL-04	17-DEC-05
10006010	10533	CLOSED	03-OCT-04	24-MAY-06
10006010	7996	CLOSED	14-JUL-04	24-MAY-06
10006010	80578	OPEN	13-SEP-13	
10006010	80587	OPEN	14-SEP-13	
10006065	7663	CLOSED	06-JUL-04	03-DEC-13
10006065	80582	CLOSED	13-SEP-13	01-MAY-14
10006065	80583	CLOSED	13-SEP-13	01-MAY-14
10006101	10537	CLOSED	03-OCT-04	03-DEC-13
10006101	7999	CLOSED	14-JUL-04	03-DEC-13
10006101	82525	CLOSED	28-NOV-13	09-JAN-14
10006102	7660	CLOSED	06-JUL-04	03-DEC-13
10006102	80597	OPEN	14-SEP-13	
10006106	10538	CLOSED	03-OCT-04	03-DEC-13
10006106	8001	CLOSED	14-JUL-04	03-DEC-13
10006106	80576	CLOSED	13-SEP-13	18-DEC-13
10006155	80594	OPEN	14-SEP-13	
10006155	80595	OPEN	14-SEP-13	
10006155	81111	OPEN	08-OCT-13	
10006155	8137	CLOSED	15-JUL-04	30-MAY-06
10006164	8651	CLOSED	28-JUL-04	17-DEC-05
10014423	8651	CLOSED	28-JUL-04	17-DEC-05

AMWTP

Advanced Mixed Waste Treatment Project

AMWTP

Non-Conformance Report

Date: 22-Sep-2014

Time: 08:57

Container ID *or related Batch ID*	Trackwise Number	Status	Opened Date	Closed Date
10014428	8651	CLOSED	28-JUL-04	17-DEC-05
10014437	8651	CLOSED	28-JUL-04	17-DEC-05
10014439	8651	CLOSED	28-JUL-04	17-DEC-05
10014447	8651	CLOSED	28-JUL-04	17-DEC-05
10078811	80585	OPEN	14-SEP-13	
10087288	80574	CLOSED	13-SEP-13	05-NOV-13
10120127	80591	CLOSED	14-SEP-13	05-NOV-13
10124240	69076	CLOSED	20-FEB-12	30-AUG-12
10135267	69064	CLOSED	20-FEB-12	03-DEC-13
10135267	69076	CLOSED	20-FEB-12	30-AUG-12
10136870	69076	CLOSED	20-FEB-12	30-AUG-12
10137140	69076	CLOSED	20-FEB-12	30-AUG-12
10140694	69076	CLOSED	20-FEB-12	30-AUG-12
10140695	69076	CLOSED	20-FEB-12	30-AUG-12
10147533	69076	CLOSED	20-FEB-12	30-AUG-12
10267746	69076	CLOSED	20-FEB-12	30-AUG-12
10359239	69076	CLOSED	20-FEB-12	30-AUG-12
10367415	69076	CLOSED	20-FEB-12	30-AUG-12
10367429	69076	CLOSED	20-FEB-12	30-AUG-12
10367431	69076	CLOSED	20-FEB-12	30-AUG-12
10367617	69076	CLOSED	20-FEB-12	30-AUG-12
10367982	69076	CLOSED	20-FEB-12	30-AUG-12
10367998	69076	CLOSED	20-FEB-12	30-AUG-12
10368061	69076	CLOSED	20-FEB-12	30-AUG-12
10368104	69076	CLOSED	20-FEB-12	30-AUG-12
10368529	69076	CLOSED	20-FEB-12	30-AUG-12
10368907	69076	CLOSED	20-FEB-12	30-AUG-12
10371605	69076	CLOSED	20-FEB-12	30-AUG-12
10490232	82527	OPEN	29-NOV-13	
10003289	19421	CLOSED	04-DEC-05	26-DEC-05
10003289	30062	CLOSED	09-AUG-07	02-SEP-08
10087288	29385	CLOSED	09-AUG-07	05-NOV-13
10120127	32980	CLOSED	14-AUG-07	04-SEP-08

*****End of Non-Conformance Report*****

AMWTP
Advanced Mixed Waste Treatment Project

AMWTP

Checklist Report

Date: 22-Sep-2014
Time: 08:57

Batch Id RTR13-00213 **Open Date** 13-SEP-13 **Close Date** 14-SEP-13

Reviewer DENISE LEE **Approval Level** Independent Technical Reviewer
Approval Date 29-NOV-13 **Review Iteration** 1

Question Text	Answer	Requirement	Comment
1. Is the Batch Data Report (BDR) and Quality Assurance (QA) documentation complete with the following: o Real-Time Radiography (RTR) Batch Coversheet o Table of Contents (manual review only) o RTR Analysis reports o Replicate Scan o Replicate Comparison o Independent Observation o ITR checklist (Form-1412, manual review only) o Form-1491, Batch Data Report Supplemental Comment Form (manual review only) o Associated NCRs (referenced in Waste Tracking System [WTS]) o Audio/Video Recording References?	Yes		
2. Are there 20 containers or less in the batch?	Yes		
3. Was the image quality indicator (IQI) satisfactory?	Yes		
4. Does every container in the batch reference an audio/video recording?	Yes		
5. Is there a completed radiography data analysis for each container in the batch?	Yes		
6. Was each RTR Operator qualified at the time of the radiography event?	Yes		
7. Was the data generated in a technically correct manner using the correct revision of INST-OI-12, Real-Time Radiography Operations (Drum)?	No		See batch comments
8. Was the correct procedure and revision documented on all analysis reports?	Yes		
9. Has the E-signature History review been performed?	Yes		
10. Does the RTR operator confirm that the physical form matched the waste stream description and waste matrix code?	Yes		
11. Does the packaging weight plus the net weight equal the gross weight of the container in the estimated waste material parameters?	Yes		
12. Were all entries into the waste material items section assigned to the correct waste material parameters?	Yes		
13. Has the description of rigid liners and layers of confinement been properly documented, as applicable?	Yes		
14. Was the presence or absence of prohibited items properly documented?	Yes		
15. If prohibited items were identified, have appropriate nonconformance reports (NCRs) been generated?	Yes		
16. Were the containers examined between October and April in compliance with the preheat requirements?	No		This batch was opened and closed in September.
17. Were all proper units and significant figures used for all reported volumes/weights?	Yes		
18. Was there a valid replicate scan performed (at least one container per day, or once per testing batch, whichever is less frequent)? o Record the container number, the replicate observation date in the comment section of this checklist. o Record any issues or concerns in the batch comment section.	Yes		Replicate Drum 10078811 was exam on 9/14/13. Original Operator enters 65% Fill Factor and Impenetrable Dense Objects as Yes, Unacceptable. The Replicate Operator enters 60% Fill Factor and Impenetrable Dense Objects as Yes, Acceptable. I agree with the Original Operator. There were other minor differences between the exams. These don't affect the disposition of the container or the DQOs.
19. Was there a valid Operator Independent Observation	Yes		OIO Drum 10078850 was exam on 9/14/13. The

Batch Id RTR13-00213 **Open Date** 13-SEP-13 **Close Date** 14-SEP-13

Reviewer DENISE LEE **Approval Level** Independent Technical Reviewer

Approval Date 29-NOV-13 **Review Iteration** 1

Question Text	Answer	Requirement	Comment
(OIO) (not the replicate) performed (at least one container per day, or once per testing batch, whichever is less frequent)? o Record the container number and the OIO date in the comment section of this checklist. o Record any issues or concerns in the batch comment section.			Original Operator enters 66% Fill Factor, Sharp Objects as No and the waste description is broken floor tiles. The OIO Operator enters 65% Fill Factor, Sharp Objects as Yes and the waste description is construction rubble. I agree with the Original Operator on the waste description for it defines the construction rubble more. There were other minor differences between the exams. These don't affect the disposition of the container or the DQOs.
20. Were any significant differences identified that would affect the original disposition of the replicate and OIO, or affect data quality objectives (DQOs)? If so, ensure an NCR was generated and WTS flagged.	No		
21. Were the RTR quality assurance objectives (QAOs) met? o Precision o Accuracy o Completeness o Comparability	No		See batch comments
22. Were any NCRs generated for containers containing prohibited items, or any non-conforming conditions that failed to meet DQOs or QAOs? o If so, include the NCRs, as appropriate, in the BDR.	Yes		
23. Were the rework requirements clearly identified in WTS or on the BDR?	Yes		

Batch Id RTR13-00213 **Open Date** 13-SEP-13 **Close Date** 14-SEP-13

Reviewer DENISE LEE **Approval Level** Independent Technical Reviewer
Approval Date 29-NOV-13 **Review Iteration** 2

Question Text	Answer	Requirement	Comment
1. Is the Batch Data Report (BDR) and Quality Assurance (QA) documentation complete with the following: o Real-Time Radiography (RTR) Batch Coversheet o Table of Contents (manual review only) o RTR Analysis reports o Replicate Scan o Replicate Comparison o Independent Observation o ITR checklist (Form-1412, manual review only) o Form-1491, Batch Data Report Supplemental Comment Form (manual review only) o Associated NCRs (referenced in Waste Tracking System [WTS]) o Audio/Video Recording References?	Yes		
2. Are there 20 containers or less in the batch?	Yes		
3. Was the image quality indicator (IQI) satisfactory?	Yes		
4. Does every container in the batch reference an audio/video recording?	Yes		
5. Is there a completed radiography data analysis for each container in the batch?	Yes		
6. Was each RTR Operator qualified at the time of the radiography event?	Yes		
7. Was the data generated in a technically correct manner using the correct revision of INST-OI-12, Real-Time Radiography Operations (Drum)?	Yes		
8. Was the correct procedure and revision documented on all analysis reports?	Yes		
9. Has the E-signature History review been performed?	Yes		
10. Does the RTR operator confirm that the physical form matched the waste stream description and waste matrix code?	Yes		
11. Does the packaging weight plus the net weight equal the gross weight of the container in the estimated waste material parameters?	Yes		
12. Were all entries into the waste material items section assigned to the correct waste material parameters?	Yes		
13. Has the description of rigid liners and layers of confinement been properly documented, as applicable?	Yes		
14. Was the presence or absence of prohibited items properly documented?	Yes		
15. If prohibited items were identified, have appropriate *nonconformance reports* (NCRs) been generated?	Yes		
16. Were the containers examined between October and April in compliance with the preheat requirements?	No		This batch was opened and closed in September.
17. Were all proper units and significant figures used for all reported volumes/weights?	Yes		
18. Was there a valid replicate scan performed (at least one container per day, or once per testing batch, whichever is less frequent)? o Record the container number, the replicate observation date in the comment section of this checklist. o Record any issues or concerns in the batch comment section.	Yes		Replicate Drum 10078811 was exam on 9/14/13. Original Operator enters 65% Fill Factor and Impenetrable Dense Objects as Yes, Unacceptable. The Replicate Operator enters 60% Fill Factor and Impenetrable Dense Objects as Yes, Acceptable. I agree with the Original Operator. There were other minor differences between the exams. These don't affect the disposition of the container or the DQOs.
19. Was there a valid Operator Independent Observation	Yes		OIO Drum 10078850 was exam on 9/14/13. The

Batch Id RTR13-00213 **Open Date** 13-SEP-13 **Close Date** 14-SEP-13

Reviewer DENISE LEE **Approval Level** Independent Technical Reviewer

Approval Date 29-NOV-13 **Review Iteration** 2

Question Text	Answer	Requirement	Comment
(OIO) (not the replicate) performed (at least one container per day, or once per testing batch, whichever is less frequent)? o Record the container number and the OIO date in the comment section of this checklist. o Record any issues or concerns in the batch comment section.			Original Operator enters 66% Fill Factor, Sharp Objects as No and the waste description is broken floor tiles. The OIO Operator enters 65% Fill Factor, Sharp Objects as Yes and the waste description is construction rubble. I agree with the Original Operator on the waste description for it defines the construction rubble more. There were other minor differences between the exams. These don't affect the disposition of the container or the DQOs.
20. Were any significant differences identified that would affect the original disposition of the replicate and OIO, or affect data quality objectives (DQOs)? If so, ensure an NCR was generated and WTS flagged.	No		
21. Were the RTR quality assurance objectives (QAOs) met? o Precision o Accuracy o Completeness o Comparability	Yes		
22. Were any NCRs generated for containers containing prohibited items, or any non-conforming conditions that failed to meet DQOs or QAOs? o If so, include the NCRs, as appropriate, in the BDR.	Yes		
23. Were the rework requirements clearly identified in WTS or on the BDR?	Yes		

Batch Id RTR13-00213 **Open Date** 13-SEP-13 **Close Date** 14-SEP-13

Reviewer DAVE MARQUARDT **Approval Level** SPM Data Validation

Approval Date 02-DEC-13 **Review Iteration** 1

Question Text	Answer	Requirement	Comment
(1) Has the batch received a Data Generation Level Independent Technical Review?	Yes	MP-TRUW-8.2, C3-10b(1)	
(2) Is the Independent Technical Review checklist complete?	Yes	MP-TRUW-8.2, C3-10b(1)	
(3) When identified, were polychlorinated biphenyls (PCBs), mercury, lead, or other hazardous contaminants consistent with the waste stream acceptable knowledge (AK) Summary Report(s) and/or AK documentation?	Yes	MP-TRUW-8.2, C4-3	
(4) Are any ignitable, corrosive, or reactive wastes identified in this waste?	No	MP-TRUW-8.2, C4-3	
(5) Are the packaging configurations identified on the real-time radiography (RTR) consistent with the waste stream AK Summary Report(s) and/or AK documentation?	Yes	MP-TRUW-8.2, C4-3	
(6) Do the containers in this batch contain typical waste items consistent with waste stream AK Summary Report(s) and/or AK documentation?	Yes	MP-TRUW-8.2, C4-3	
(7) Are the Waste Matrix Codes (WMCs) and physical form descriptions consistent with AK?	Yes	MP-TRUW-8.2, C4-3	
(8) Have all AK discrepancies been resolved and have all AK Resolution checklists been approved? Reference all waste stream AK documentation used in review of this data package.	N/A	MP-TRUW-8.2, C4-3	No discrepancies. RPT-TRUW-05, RPT-TRUW-06, RPT-TRUW-12, RPT-TRUW-56.
(9) Have all applicable Quality Assurance Objectives (QAOs) been met, including precision, accuracy, completeness, and comparability, by using the appropriate acceptance criteria for each as specified in MP-TRUW-8.2, Quality Assurance Project Plan Section C3-4? Precision ¿ Verified prior to use by tuning precisely enough to demonstrate compliance with QAOs through viewing an image test pattern, as evidenced by a satisfactory Image Quality Indicator (IQI). ¿ Have discrepancies, if any, between radiography operators been reconciled? Accuracy ¿ Use of a target to tune the image for maximum sharpness as evidenced by a satisfactory IQI and by requiring operators to successfully identify 100% of the required items in a training container during initial and subsequent qualifications. Completeness ¿ An audio/videotape (or equivalent media) of the radiography examination and a validated radiography data form will be obtained for 100% of the retrievably stored waste container in the program for all waste containers subject to radiography. Comparability ¿ Use of standardized radiography procedures and operator qualifications.	Yes	MP-TRUW-8.2, C3-4a	
(10) Do the waste container contents match the WMC, waste stream description and identify the absence of prohibited items?	Yes	MP-TRUW-8.2, C1-3 and B3-11	
(11) If residual liquids exist in the container, is an estimate of quantity given?	Yes	MP-TRUW-8.2, C1-3	
(12) Do the individual container reports contain the (a) IDC, (b) Waste Matrix Code, (c) audio/video recording reference, (d) gross container weight, (e) waste material parameter weights, and (f) signature and date of examination?	Yes	MP-TRUW-8.2, C1-3 and C3-11a	
(13) Have the IDC, WMC, and/or waste stream for all	No	MP-TRUW-8.2, C1-3 and	Drum 10004363 received an IDC change. No NCR or

Batch Id RTR13-00213 **Open Date** 13-SEP-13 **Close Date** 14-SEP-13

Reviewer DAVE MARQUARDT **Approval Level** SPM Data Validation

Approval Date 02-DEC-13 **Review Iteration** 1

Question Text	Answer	Requirement	Comment
containers in the batch remained the same as originally assigned by the historical designation? If not, note the container number in the comment field and notify the Acceptable Knowledge Expert (AKE) if NCR does not exist on the WMC and IDC change.		C3-4a	AKR was required.
(14) Was a replicate scan performed by an independent operator on at least one container per day or once per testing batch, whichever is less frequent, by a qualified radiography operator that was not involved in the original scan of the waste container?	Yes	MP-TRUW-8.2, B1-3, C3-4a, and C3-10b(1)	
(15) Has an independent observation of one scan (not the replicate) been performed by a qualified operator that was not involved in the original scan of the waste container, at a rate of once per day or once per batch, whichever is less frequent? Record date of observation and any issues or concerns in the comment section.	Yes	MP-TRUW-8.2, C1-3 and C3-4a	OIO Drum 10078850 was examined on 9/14/13. No issues.
(16) Did personnel having current qualifications perform all RTR examinations?	Yes	MP-TRUW-8.1, Appendix F	
(17) Verify the correct procedure and revision number were used for all containers in this batch.	Yes	MP-TRUW-8.2, C3-4a	
(18) Verify the audio and video checks were performed and are satisfactory.	Yes	MP-TRUW-8.2, C3-4a	
(19) Verify that there are 20 or fewer containers in the batch.	Yes	MP-TRUW-8.2, C1-3	
(20) Does the data for all containers within this batch meet the review, validation, and verification requirements? · Are proper units (e.g. Liters or pounds) and significant figure used? · Is the BDR complete (all pages identified in the BDR and numbered accordingly)? - RTR Batch Coversheet - Table of Contents (manual review only) - RTR Analysis reports - Replicate Scan - Replicate Comparison - Independent Observation - Form-1412, ITR checklist - Associated NCRs - Form, 1491, Batch Data Report Supplemental Comment Form, as applicable - Audio/Video Recording References	Yes	MP-TRUW-8.2, C3 10b(2)	
(21) Review all NCR(s) (open and closed). Can the batch be approved?	Yes	MP-TRUW-8.2, C3-13	
(22) Is all data associated with this BDR acceptable for signature release?	Yes	MP-TRUW-8.2, C3 10b(2)	

Batch Id RTR13-00213 **Open Date** 13-SEP-13 **Close Date** 14-SEP-13

Esignature History

Esig Approval ID	User ID	Esig Date	Approval Level	Comments
2663750	DMARQUARDT	02-DEC-13	SPM	Reviewed and validated. Approve.
2661262	DLEE	29-NOV-13	ITR	Rework completed to satisfaction. Promote to SPM.
2661233	DLEE	29-NOV-13	ITR	Demote to Operations for rework.

AMWTP
Advanced Mixed Waste Treatment Project

AMWTP

RTR Analysis Report

Date: 22-Sep-2014

Time: 08:58

Batch Id RTR13-00213 **Container Id** 10004363 **Analysis Id** 0000091706

Container Type 001 drum, 55 Gallon (17C) **Analysis Status** Pass

RTR Date 13-SEP-2013 14:20 **Gross Weight** 299.880 Lbs. **Net Weight** 224.880 Lbs

Equipment Z-213-101 **Waste Matrix Code** S5900 **IDC** UN-00B Undefined Debris

Recording Id 1RTR13-00113 **Procedure Id** INST-OI-12 **Revision** 52 **Approval Level** SPM

Is Test Pattern Resolution Ok? Yes **Start Side** A **Replicate** No **OIO** No

Audio Visual Ok? Yes **Operator** JDUKE

Result Comment Waste appears to be a lead liner impenetrable.
AK concurs with the recommended IDC, UN-00B, for container 10004363. No AKR or NCR is necessary. CHD 11/25/13

Package

IDC Correct Yes **Recommended IDC** UN-00B **Summary Category** S5000

Idc Change Reason Because lead lined unable to penetrate

Rigid Liner Present? Yes **LinerType** TYPE 1

Liner Punctured? Yes **Sharp Objects?** No

Liner Lid Present? Yes **Sharp Objects Are Protected?** Yes

Liner Lid Deformed? No **Layers Of Confinement** 0

Fill Factor 100

Bag Closure Method No Bags

Liquids

Liquid Present? No **Internal Container with Liquid** No

Internal Container with Liquid 0 pints **LA Candidate** No

Liquid Between Liner & Drum 0 pints **Containerized Liquid**

Containerized Liquid Amt 0 pints

Total Liquid Amount 0 pints

Other Liquids 0 pints **Comment**

Prohibited Liquids Present No **Comment**

Contents-Drum or Box

	Value	Comment		Value	Comment
Lead?	Yes, Rejected	lead liner	Mercury Present?	No	
Wet Cell Batteries?	No		Explosives?	No	
Prohibited Compressed Gases?	No		PCBs Present?	No	
Aerosol Cans?	No		PCB Mass (lbs)	0	
Non-Mixed Hazardous Waste Present?	No		Sealed Containers Over 4L?	No	

Non-Radionuclide Pyrophoric Materials Present? No

Waste exhibiting the characteristics of Ignitability, Corrosivity or Reactivity Present? No

Wastes Incompatible with backfill, seal and panel closure materials, container and packaging materials,shipping container or other wastes? No

Impenetrable Dense Objects? Yes - Unacceptable lead liner

Waste Material Items

Packaging Materials

Material Item	Quantity	Unit	Unit Wt(lbs)	Item Wt(lbs)
90 mil liner	1.000	EACH	16.000	16.000

Waste Items byWeight

Material Item	Quantity	Unit	Unit Wt(lbs)	Item Wt(lbs)
Drum lead-liner (1/16"x28"x72")	1.000	EACH	50.000	50.000

Waste Items by Volume

Material Item	Quantity	Unit	Unit Wt(lbs)	Item Wt(lbs)

Batch Id RTR13-00213 **Container Id** 10004363 **Analysis Id** 0000091706

Waste Parameters

Waste Parameter	Remaining Weight %	Actual Weight Lbs
Iron-based Metals/Alloys	0.000	0.000
Aluminum-based Metals/Alloys	0.000	0.000
Other metals	100.000	224.880
Other Inorganic Materials	0.000	0.000
Cellulosics	0.000	0.000
Rubber	0.000	0.000
Plastic (Waste Materials)	0.000	0.000
Inorganic matrix	0.000	0.000
Organic matrix	0.000	0.000
Soils/gravel	0.000	0.000
Steel (packaging materials)	0.000	59.000
Plastic (packaging materials)	0.000	16.000
Cellulosics Packaging	0.000	0.000

Analysis Esignature History

Esig Approval Id	User Id	Esignature Date	Comment
2659373	CHINKLE	25-NOV-2013 10:33	batch is promoted. chd 11/25/13
2624004	JDUKE	13-SEP-2013 14:20	

AMWTP
Advanced Mixed Waste Treatment Project

AMWTP
RTR Analysis Report

Date: 22-Sep-2014
Time: 08:58

Batch Id RTR13-00213 **Container Id** 10087288 **Analysis Id** 0000091707
Container Type A drum, 55 Gallon Drum (17H) **Analysis Status** Pass

RTR Date 13-SEP-2013 14:55 **Gross Weight** 452.025 **Lbs.** **Net Weight** 373.025 **Lbs**
Equipment Z-213-101 **Waste Matrix Code** S3114 **IDC** RF-003 Organic Setups, Oil Solids
Recording Id 1RTR13-00113 **Procedure Id** INST-OI-12 **Revision** 52 **Approval Level** SPM
Is Test Pattern Resolution Ok? Yes **Start Side** A **Replicate** No **OIO** No
Audio Visual Ok? Yes **Operator** JDUKE

Result Comment Waste appears to be sludge.

Package

IDC Correct Yes **Recommended IDC** **Summary Category** S3000
Idc Change Reason
Rigid Liner Present? Yes **LinerType** TYPE 2
Liner Punctured? Yes **Sharp Objects?** No
Liner Lid Present? Yes **Sharp Objects Are Protected?** Yes
Liner Lid Deformed? No **Layers Of Confinement** 1
Fill Factor 86
Bag Closure Method Twisted and Taped

Liquids

Liquid Present? Yes **Internal Container with Liquid** No
Internal Container with Liquid 0 pints **LA Candidate** No
Liquid Between Liner & Drum 0 pints **Containerized Liquid**
Containerized Liquid Amt 0 pints
Total Liquid Amount .03 pints
Other Liquids .03 pints **Comment** .03 pints of liquid at bottom of waste
Prohibited Liquids Present Yes **Comment** pcb's with liquid

Contents-Drum or Box

	Value	Comment		Value	Comment
Lead?	No		Mercury Present?	No	
Wet Cell Batteries?	No		Explosives?	No	
Prohibited Compressed Gases?	No		PCBs Present?	Yes - Prohibited	pcb's w/liquid
Aerosol Cans?	No		PCB Mass (lbs)	373.03	
Non-Mixed Hazardous Waste Present?	No		Sealed Containers Over 4L?	No	

Non-Radionuclide Pyrophoric Materials Present? No
Waste exhibiting the characteristics of Ignitability, Corrosivity or Reactivity Present? No
Wastes Incompatible with backfill, seal and panel closure materials, container and packaging materials,shipping container or other wastes? No
Impenetrable Dense Objects? No

Waste Material Items

Packaging Materials

Material Item	Quantity	Unit	Unit Wt(lbs)	Item Wt(lbs)
90 mil liner	1.000	EACH	16.000	16.000
O-ring plastic bag	1.000	EACH	4.000	4.000

Waste Items byWeight

Material Item	Quantity	Unit	Unit Wt(lbs)	Item Wt(lbs)

Waste Items by Volume

Material Item	Quantity	Unit	Unit Wt(lbs)	Item Wt(lbs)
Liquids for Organic Matrix	0.030	PINTS	1.000	0.030

Batch Id RTR13-00213 **Container Id** 10087288 **Analysis Id** 0000091707

Waste Parameters

Waste Parameter	Remaining Weight %	Actual Weight Lbs
Iron-based Metals/Alloys	0.000	0.000
Aluminum-based Metals/Alloys	0.000	0.000
Other metals	0.000	0.000
Other Inorganic Materials	0.000	0.000
Cellulosics	0.000	0.000
Rubber	0.000	0.000
Plastic (Waste Materials)	0.000	0.000
Inorganic matrix	0.000	0.000
Organic matrix	100.000	373.025
Soils/gravel	0.000	0.000
Steel (packaging materials)	0.000	59.000
Plastic (packaging materials)	0.000	20.000
Cellulosics Packaging	0.000	0.000

Analysis Esignature History

Esig Approval Id	User Id	Esignature Date	Comment
2624058	JDUKE	13-SEP-2013 14:55	

Batch Id RTR13-00213 **Container Id** 10006106 **Analysis Id** 0000091709

Container Type 001 drum, 55 Gallon (17C) **Analysis Status** Pass

RTR Date 13-SEP-2013 15:11 **Gross Weight** 246.960 **Lbs.** **Net Weight** 185.960 **Lbs**

Equipment Z-213-101 **Waste Matrix Code** S5410 **IDC** RF-376 Cemented Insulation and Filter Media

Recording Id 1RTR13-00113 **Procedure Id** INST-OI-12 **Revision** 52 **Approval Level** SPM

Is Test Pattern Resolution Ok? Yes **Start Side** A **Replicate** No **OIO** No

Audio Visual Ok? Yes **Operator** JDUKE

Result Comment Waste appears to be filter media

Package

IDC Correct Yes **Recommended IDC** **Summary Category** S5000

Idc Change Reason

Rigid Liner Present? No **LinerType** NO LINER

Liner Punctured? N/A **Sharp Objects?** No

Liner Lid Present? No **Sharp Objects Are Protected?** Yes

Liner Lid Deformed? N/A **Layers Of Confinement** 3

Fill Factor 85

Bag Closure Method Twisted and Taped

Liquids

Liquid Present? No **Internal Container with Liquid** No

Internal Container with Liquid 0 pints **LA Candidate** No

Liquid Between Liner & Drum 0 pints **Containerized Liquid**

Containerized Liquid Amt 0 pints

Total Liquid Amount 0 pints

Other Liquids 0 pints **Comment**

Prohibited Liquids Present No **Comment**

Contents-Drum or Box

	Value	Comment		Value	Comment
Lead?	Yes, Rejected	lead liner	Mercury Present?	No	
Wet Cell Batteries?	No		Explosives?	No	
Prohibited Compressed Gases?	No		PCBs Present?	No	
Aerosol Cans?	No		PCB Mass (lbs)	0	
Non-Mixed Hazardous Waste Present?	No		Sealed Containers Over 4L?	No	

Non-Radionuclide Pyrophoric Materials Present? No

Waste exhibiting the characteristics of Ignitability, Corrosivity or Reactivity Present? No

Wastes Incompatible with backfill, seal and panel closure materials, container and packaging materials,shipping container or other wastes? No

Impenetrable Dense Objects? No

Waste Material Items

Packaging Materials

Material Item	Quantity	Unit	Unit Wt(lbs)	Item Wt(lbs)
Drum plastic bag	2.000	EACH	1.000	2.000

Waste Items byWeight

Material Item	Quantity	Unit	Unit Wt(lbs)	Item Wt(lbs)
wood	1.000	EACH	10.000	10.000
Plastic bag for waste	1.000	EACH	0.250	0.250
Drum lead-liner (1/16"x28"x72")	1.000	EACH	50.000	50.000

Waste Items by Volume

Material Item	Quantity	Unit	Unit Wt(lbs)	Item Wt(lbs)

Batch Id RTR13-00213 **Container Id** 10006106 **Analysis Id** 0000091709

Waste Parameters

Waste Parameter	Remaining Weight %	Actual Weight Lbs
Iron-based Metals/Alloys	0.000	0.000
Aluminum-based Metals/Alloys	0.000	0.000
Other metals	0.000	50.000
Other Inorganic Materials	0.000	0.000
Cellulosics	100.000	135.710
Rubber	0.000	0.000
Plastic (Waste Materials)	0.000	0.250
Inorganic matrix	0.000	0.000
Organic matrix	0.000	0.000
Soils/gravel	0.000	0.000
Steel (packaging materials)	0.000	59.000
Plastic (packaging materials)	0.000	2.000
Cellulosics Packaging	0.000	0.000

Analysis Esignature History

Esig Approval Id	User Id	Esignature Date	Comment
2624070	JDUKE	13-SEP-2013 15:11	

AMWTP
Advanced Mixed Waste Treatment Project

AMWTP
RTR Analysis Report

Date: 22-Sep-2014
Time: 08:58

Batch Id RTR13-00213 **Container Id** 10006101 **Analysis Id** 0000091715
Container Type 001 drum, 55 Gallon (17C) **Analysis Status** Pass

RTR Date 13-SEP-2013 16:29 **Gross Weight** 187.430 Lbs. **Net Weight** 127.430 Lbs
Equipment Z-213-101 **Waste Matrix Code** S5410 **IDC** RF-376 Cemented Insulation and Filter Media
Recording Id RTR13-00113 **Procedure Id** INST-OI-12 **Revision** 52 **Approval Level** SPM
Is Test Pattern Resolution Ok? Yes **Start Side** A **Replicate** No **OIO** No
Audio Visual Ok? Yes **Operator** JDUKE
Result Comment Waste appears to filter media.

Package

IDC Correct Yes **Recommended IDC** **Summary Category** S5000
Idc Change Reason
Rigid Liner Present? No **LinerType** NO LINER
Liner Punctured? N/A **Sharp Objects?** No
Liner Lid Present? No **Sharp Objects Are Protected?** Yes
Liner Lid Deformed? N/A **Layers Of Confinement** 1
Fill Factor 20
Bag Closure Method Twisted and Taped

Liquids

Liquid Present? No **Internal Container with Liquid** No
Internal Container with Liquid 0 pints **LA Candidate** No
Liquid Between Liner & Drum 0 pints **Containerized Liquid**
Total Liquid Amount 0 pints **Containerized Liquid Amt** 0 pints
Other Liquids 0 pints **Comment**
Prohibited Liquids Present No **Comment**

Contents-Drum or Box

	Value	Comment		Value	Comment
Lead?	Yes, Rejected	lead liner	Mercury Present?	No	
Wet Cell Batteries?	No		Explosives?	No	
Prohibited Compressed Gases?	No		PCBs Present?	No	
Aerosol Cans?	No		PCB Mass (lbs)	0	
Non-Mixed Hazardous Waste Present?	No		Sealed Containers Over 4L?	No	

Non-Radionuclide Pyrophoric Materials Present? No
Waste exhibiting the characteristics of Ignitability, Corrosivity or Reactivity Present? No
Wastes Incompatible with backfill, seal and panel closure materials, container and packaging materials,shipping container or other wastes? No
Impenetrable Dense Objects? No

Waste Material Items

Packaging Materials

Material Item	Quantity	Unit	Unit Wt(lbs)	Item Wt(lbs)
Drum plastic bag	1.000	EACH	1.000	1.000

Waste Items byWeight

Material Item	Quantity	Unit	Unit Wt(lbs)	Item Wt(lbs)
misc. metal debris	1.000	EACH	1.000	1.000
plastic sheeting	1.000	EACH	1.000	1.000
Cardboard liner	1.000	EACH	4.000	4.000
Drum lead-liner (1/16"x28"x72")	1.000	EACH	50.000	50.000

Waste Items by Volume

Material Item	Quantity	Unit	Unit Wt(lbs)	Item Wt(lbs)

Batch Id RTR13-00213 **Container Id** 10006101 **Analysis Id** 0000091715

Waste Parameters

Waste Parameter	Remaining Weight %	Actual Weight Lbs
Iron-based Metals/Alloys	0.000	1.000
Aluminum-based Metals/Alloys	0.000	0.000
Other metals	0.000	50.000
Other Inorganic Materials	0.000	0.000
Cellulosics	100.000	75.430
Rubber	0.000	0.000
Plastic (Waste Materials)	0.000	1.000
Inorganic matrix	0.000	0.000
Organic matrix	0.000	0.000
Soils/gravel	0.000	0.000
Steel (packaging materials)	0.000	59.000
Plastic (packaging materials)	0.000	1.000
Cellulosics Packaging	0.000	0.000

Analysis Esignature History

Esig Approval Id	User Id	Esignature Date	Comment
2624126	JDUKE	13-SEP-2013 16:29	

AMWTP
Advanced Mixed Waste Treatment Project

AMWTP
RTR Analysis Report

Date: 22-Sep-2014
Time: 08:58

Batch Id RTR13-00213 **Container Id** 10006065 **Analysis Id** 0000091717
Container Type 001 drum, 55 Gallon (17C) **Analysis Status** Pass

RTR Date 13-SEP-2013 16:52 **Gross Weight** 295.470 Lbs. **Net Weight** 235.470 Lbs
Equipment Z-213-101 **Waste Matrix Code** S5122 **IDC** RF-440 Glass
Recording Id RTR13-00113 **Procedure Id** INST-OI-12 **Revision** 52 **Approval Level** SPM
Is Test Pattern Resolution Ok? Yes **Start Side** A **Replicate** No **OIO** No
Audio Visual Ok? Yes **Operator** JDUKE

Result Comment Waste appears to be glass and leaded glass
Rework: Updated comments in the contents-container field. Corrected entries in waste parameters. cjs 11/29/13

Package

IDC Correct Yes **Recommended IDC** **Summary Category** S5000
Idc Change Reason
Rigid Liner Present? No **LinerType** NO LINER
Liner Punctured? N/A **Sharp Objects?** No
Liner Lid Present? No **Sharp Objects Are Protected?** Yes
Liner Lid Deformed? N/A **Layers Of Confinement** 3
Fill Factor 85
Bag Closure Method Twisted and Taped

Liquids

Liquid Present? No **Internal Container with Liquid** No
Internal Container with Liquid 0 pints **LA Candidate** No
Liquid Between Liner & Drum 0 pints **Containerized Liquid**
Total Liquid Amount 0 pints **Containerized Liquid Amt** 0 pints
Other Liquids 0 pints **Comment**
Prohibited Liquids Present No **Comment**

Contents-Drum or Box

	Value	Comment		Value	Comment
Lead?	Yes, Rejected	lead lined and lead glass	**Mercury Present?**	No	
Wet Cell Batteries?	No		**Explosives?**	No	
Prohibited Compressed Gases?	No		**PCBs Present?**	No	
Aerosol Cans?	No		**PCB Mass (lbs)**	0	
Non-Mixed Hazardous Waste Present?	No		**Sealed Containers Over 4L?**	Yes	clam shells

Non-Radionuclide Pyrophoric Materials Present? No
Waste exhibiting the characteristics of Ignitability, Corrosivity or Reactivity Present? No
Wastes Incompatible with backfill, seal and panel closure materials, container and packaging materials,shipping container or other wastes? No
Impenetrable Dense Objects? No

Waste Material Items

Packaging Materials

Material Item	Quantity	Unit	Unit Wt(lbs)	Item Wt(lbs)
Drum plastic bag	1.000	EACH	1.000	1.000

Waste Items byWeight

Material Item	Quantity	Unit	Unit Wt(lbs)	Item Wt(lbs)
clam shells	1.000	EACH	10.000	10.000
Plastic bag for waste	1.000	EACH	0.250	0.250
Drum lead-liner (1/16"x28"x72")	1.000	EACH	50.000	50.000

Waste Items by Volume

Material Item	Quantity	Unit	Unit Wt(lbs)	Item Wt(lbs)

Batch Id RTR13-00213 Container Id 10006065 Analysis Id 0000091717

Waste Parameters

Waste Parameter	Remaining Weight %	Actual Weight Lbs
Iron-based Metals/Alloys	0.000	0.000
Aluminum-based Metals/Alloys	0.000	0.000
Other metals	30.000	102.566
Other Inorganic Materials	70.000	122.654
Cellulosics	0.000	0.000
Rubber	0.000	0.000
Plastic (Waste Materials)	0.000	10.250
Inorganic matrix	0.000	0.000
Organic matrix	0.000	0.000
Soils/gravel	0.000	0.000
Steel (packaging materials)	0.000	59.000
Plastic (packaging materials)	0.000	1.000
Cellulosics Packaging	0.000	0.000

Analysis Esignature History

Esig Approval Id	User Id	Esignature Date	Comment
2661245	CSIMMONS	29-NOV-2013 09:29	Rework
2624136	JDUKE	13-SEP-2013 16:52	

Batch Id RTR13-00213 **Container Id** 10078811 **Analysis Id** 0000091719

Container Type 001 drum, 55 Gallon (17C) **Analysis Status** Pass

RTR Date 14-SEP-2013 08:58 **Gross Weight** 445.410 Lbs. **Net Weight** 368.410 Lbs

Equipment Z-213-101 **Waste Matrix Code** S5490 **IDC** RF-374 Blacktop, Concrete and Construction Rubble

Recording Id 1RTR13-00113 **Procedure Id** INST-OI-12 **Revision** 52 **Approval Level** SPM

Is Test Pattern Resolution Ok? Yes **Start Side** A **Replicate** No **OIO** No

Audio Visual Ok? Yes **Operator** CTIEGS

Result Comment Remaining waste appears to contain concrete, rubble.

Package

IDC Correct Yes **Recommended IDC** **Summary Category** S5000

Idc Change Reason

Rigid Liner Present? Yes **LinerType** TYPE 2

Liner Punctured? Yes **Sharp Objects?** No

Liner Lid Present? Yes **Sharp Objects Are Protected?** Yes

Liner Lid Deformed? No **Layers Of Confinement** 2

Fill Factor 65

Bag Closure Method Twisted and Taped

Liquids

Liquid Present? No **Internal Container with Liquid** No

Internal Container with Liquid 0 pints **LA Candidate** No

Liquid Between Liner & Drum 0 pints **Containerized Liquid**

Total Liquid Amount 0 pints **Containerized Liquid Amt** 0 pints

Other Liquids 0 pints **Comment**

Prohibited Liquids Present No **Comment**

Contents-Drum or Box

	Value	Comment		Value	Comment
Lead?	No		Mercury Present?	No	
Wet Cell Batteries?	No		Explosives?	No	
Prohibited Compressed Gases?	No		PCBs Present?	No	
Aerosol Cans?	No		PCB Mass (lbs)	0	
Non-Mixed Hazardous Waste Present?	No		Sealed Containers Over 4L?	No	

Non-Radionuclide Pyrophoric Materials Present? No

Waste exhibiting the characteristics of Ignitability, Corrosivity or Reactivity Present? No

Wastes Incompatible with backfill, seal and panel closure materials, container and packaging materials,shipping container or other wastes? No

Impenetrable Dense Objects? Yes - Unacceptable dense areas of the waste down middle.

Waste Material Items

Packaging Materials

Material Item	Quantity	Unit	Unit Wt(lbs)	Item Wt(lbs)
90 mil liner	1.000	EACH	16.000	16.000
Drum plastic bag	2.000	EACH	1.000	2.000

Waste Items byWeight

Material Item	Quantity	Unit	Unit Wt(lbs)	Item Wt(lbs)

Waste Items by Volume

Material Item	Quantity	Unit	Unit Wt(lbs)	Item Wt(lbs)

Batch Id RTR13-00213 **Container Id** 10078811 **Analysis Id** 0000091719

Waste Parameters

Waste Parameter	Remaining Weight %	Actual Weight Lbs
Iron-based Metals/Alloys	0.000	0.000
Aluminum-based Metals/Alloys	0.000	0.000
Other metals	0.000	0.000
Other Inorganic Materials	100.000	368.410
Cellulosics	0.000	0.000
Rubber	0.000	0.000
Plastic (Waste Materials)	0.000	0.000
Inorganic matrix	0.000	0.000
Organic matrix	0.000	0.000
Soils/gravel	0.000	0.000
Steel (packaging materials)	0.000	59.000
Plastic (packaging materials)	0.000	18.000
Cellulosics Packaging	0.000	0.000

Analysis Esignature History

Esig Approval Id	User Id	Esignature Date	Comment
2624395	CTIEGS	14-SEP-2013 08:58	

Batch Id RTR13-00213 **Container Id** 10078850 **Analysis Id** 0000091722

Container Type 001 drum, 55 Gallon (17C) **Analysis Status** Pass

RTR Date 14-SEP-2013 09:15 **Gross Weight** 266.805 Lbs. **Net Weight** 189.805 Lbs

Equipment Z-213-101 **Waste Matrix Code** S5490 **IDC** RF-374 Blacktop, Concrete and Construction Rubble

Recording Id RTR13-00113 **Procedure Id** INST-OI-12 **Revision** 52 **Approval Level** SPM

Is Test Pattern Resolution Ok? Yes **Start Side** A **Replicate** No **OIO** No

Audio Visual Ok? Yes **Operator** CTIEGS

Result Comment Remaining waste appears to contain broken up floor tiles.

Package

IDC Correct Yes **Recommended IDC** **Summary Category** S5000

Idc Change Reason

Rigid Liner Present? Yes **LinerType** TYPE 2

Liner Punctured? Yes **Sharp Objects?** No

Liner Lid Present? Yes **Sharp Objects Are Protected?** Yes

Liner Lid Deformed? No **Layers Of Confinement** 3

Fill Factor 66

Bag Closure Method Twisted and Taped

Liquids

Liquid Present? No **Internal Container with Liquid** No

Internal Container with Liquid 0 pints **LA Candidate** No

Liquid Between Liner & Drum 0 pints **Containerized Liquid**

Containerized Liquid Amt 0 pints

Total Liquid Amount 0 pints

Other Liquids 0 pints **Comment**

Prohibited Liquids Present No **Comment**

Contents-Drum or Box

	Value	Comment		Value	Comment
Lead?	No		Mercury Present?	No	
Wet Cell Batteries?	No		Explosives?	No	
Prohibited Compressed Gases?	No		PCBs Present?	No	
Aerosol Cans?	No		PCB Mass (lbs)	0	
Non-Mixed Hazardous Waste Present?	No		Sealed Containers Over 4L?	No	

Non-Radionuclide Pyrophoric Materials Present? No

Waste exhibiting the characteristics of Ignitability, Corrosivity or Reactivity Present? No

Wastes Incompatible with backfill, seal and panel closure materials, container and packaging materials,shipping container or other wastes? No

Impenetrable Dense Objects? No

Waste Material Items

Packaging Materials

Material Item	Quantity	Unit	Unit Wt(lbs)	Item Wt(lbs)
90 mil liner	1.000	EACH	16.000	16.000
Drum plastic bag	2.000	EACH	1.000	2.000

Waste Items byWeight

Material Item	Quantity	Unit	Unit Wt(lbs)	Item Wt(lbs)
saw blade	1.000	EACH	5.000	5.000
Plastic bag for waste	4.000	EACH	0.250	1.000

Waste Items by Volume

Material Item	Quantity	Unit	Unit Wt(lbs)	Item Wt(lbs)

Batch Id RTR13-00213 **Container Id** 10078850 **Analysis Id** 0000091722

Waste Parameters

Waste Parameter	Remaining Weight %	Actual Weight Lbs
Iron-based Metals/Alloys	0.000	5.000
Aluminum-based Metals/Alloys	0.000	0.000
Other metals	0.000	0.000
Other Inorganic Materials	100.000	183.805
Cellulosics	0.000	0.000
Rubber	0.000	0.000
Plastic (Waste Materials)	0.000	1.000
Inorganic matrix	0.000	0.000
Organic matrix	0.000	0.000
Soils/gravel	0.000	0.000
Steel (packaging materials)	0.000	59.000
Plastic (packaging materials)	0.000	18.000
Cellulosics Packaging	0.000	0.000

Analysis Esignature History

Esig Approval Id	User Id	Esignature Date	Comment
2624428	CTIEGS	14-SEP-2013 09:15	

AMWTP
Advanced Mixed Waste Treatment Project

AMWTP
RTR Analysis Report

Date: 22-Sep-2014
Time: 08:58

Batch Id RTR13-00213 **Container Id** 10004749 **Analysis Id** 0000091724
Container Type 001 drum, 55 Gallon (17C) **Analysis Status** Pass

RTR Date 14-SEP-2013 09:30 **Gross Weight** 394.700 Lbs. **Net Weight** 317.700 Lbs
Equipment Z-213-101 **Waste Matrix Code** S5112 **IDC** RF-480 Non-special Source Metal
Recording Id 1RTR13-00113 **Procedure Id** INST-OI-12 **Revision** 52 **Approval Level** SPM
Is Test Pattern Resolution Ok? Yes **Start Side** A **Replicate** No **OIO** No
Audio Visual Ok? Yes **Operator** CTIEGS

Result Comment Remaining waste appears to contain piping, metal tubing, misc metals, flange, valve.

Package

IDC Correct Yes **Recommended IDC** **Summary Category** S5000
Idc Change Reason
Rigid Liner Present? Yes **LinerType** TYPE 2
Liner Punctured? Yes **Sharp Objects?** No
Liner Lid Present? Yes **Sharp Objects Are Protected?** Yes
Liner Lid Deformed? No **Layers Of Confinement** 2
Fill Factor 85
Bag Closure Method Twisted and Taped

Liquids

Liquid Present? No **Internal Container with Liquid** No
Internal Container with Liquid 0 pints **LA Candidate** No
Liquid Between Liner & Drum 0 pints **Containerized Liquid**
Total Liquid Amount 0 pints **Containerized Liquid Amt** 0 pints
Other Liquids 0 pints **Comment**
Prohibited Liquids Present No **Comment**

Contents-Drum or Box

	Value	Comment		Value	Comment
Lead?	Yes, Acceptable	scrap lead on side of waste.	Mercury Present?	No	
Wet Cell Batteries?	No		Explosives?	No	
Prohibited Compressed Gases?	No		PCBs Present?	No	
Aerosol Cans?	No		PCB Mass (lbs)	0	
Non-Mixed Hazardous Waste Present?	No		Sealed Containers Over 4L?	No	

Non-Radionuclide Pyrophoric Materials Present? No
Waste exhibiting the characteristics of Ignitability, Corrosivity or Reactivity Present? No
Wastes Incompatible with backfill, seal and panel closure materials, container and packaging materials,shipping container or other wastes? No
Impenetrable Dense Objects? No

Waste Material Items

Packaging Materials

Material Item	Quantity	Unit	Unit Wt(lbs)	Item Wt(lbs)
90 mil liner	1.000	EACH	16.000	16.000
Drum plastic bag	2.000	EACH	1.000	2.000

Waste Items byWeight

Material Item	Quantity	Unit	Unit Wt(lbs)	Item Wt(lbs)
scrap lead on side	1.000	EACH	20.000	20.000

Waste Items by Volume

Material Item	Quantity	Unit	Unit Wt(lbs)	Item Wt(lbs)
Oil-Dri (Inside 55 gal drum)	10.000	PINTS	0.420	4.200

Batch Id RTR13-00213 **Container Id** 10004749 **Analysis Id** 0000091724

Waste Parameters

Waste Parameter	Remaining Weight %	Actual Weight Lbs
Iron-based Metals/Alloys	100.000	293.500
Aluminum-based Metals/Alloys	0.000	0.000
Other metals	0.000	20.000
Other Inorganic Materials	0.000	4.200
Cellulosics	0.000	0.000
Rubber	0.000	0.000
Plastic (Waste Materials)	0.000	0.000
Inorganic matrix	0.000	0.000
Organic matrix	0.000	0.000
Soils/gravel	0.000	0.000
Steel (packaging materials)	0.000	59.000
Plastic (packaging materials)	0.000	18.000
Cellulosics Packaging	0.000	0.000

Analysis Esignature History

Esig Approval Id	User Id	Esignature Date	Comment
2624446	CTIEGS	14-SEP-2013 09:30	

Batch Id RTR13-00213 **Container Id** 10006010 **Analysis Id** 0000091725

Container Type 001 drum, 55 Gallon (17C) **Analysis Status** Pass

RTR Date 14-SEP-2013 09:44 **Gross Weight** 293.270 **Lbs.** **Net Weight** 217.270 **Lbs**

Equipment Z-213-101 **Waste Matrix Code** S5100 **IDC** RF-442 Raschig Rings, Leached

Recording Id IRTR13-00113 **Procedure Id** INST-OI-12 **Revision** 52 **Approval Level** SPM

Is Test Pattern Resolution Ok? Yes **Start Side** A **Replicate** No **OIO** No

Audio Visual Ok? Yes **Operator** CTIEGS

Result Comment Remaining waste appears to contain lead lined drum with raschig rings.

Package

IDC Correct Yes **Recommended IDC** **Summary Category** S5000

Idc Change Reason

Rigid Liner Present? Yes **LinerType** TYPE 2

Liner Punctured? Yes **Sharp Objects?** No

Liner Lid Present? Yes **Sharp Objects Are Protected?** Yes

Liner Lid Deformed? No **Layers Of Confinement** 2

Fill Factor 70

Bag Closure Method Twisted and Taped

Liquids

Liquid Present? No **Internal Container with Liquid** No

Internal Container with Liquid 0 pints **LA Candidate** No

Liquid Between Liner & Drum 0 pints **Containerized Liquid**

Total Liquid Amount 0 pints **Containerized Liquid Amt** 0 pints

Other Liquids 0 pints **Comment**

Prohibited Liquids Present No **Comment**

Contents-Drum or Box

	Value	Comment		Value	Comment
Lead?	Yes, Rejected	lead liner	**Mercury Present?**	No	
Wet Cell Batteries?	No		**Explosives?**	No	
Prohibited Compressed Gases?	No		**PCBs Present?**	No	
Aerosol Cans?	No		**PCB Mass (lbs)**	0	
Non-Mixed Hazardous Waste Present?	No		**Sealed Containers Over 4L?**	No	

Non-Radionuclide Pyrophoric Materials Present? No

Waste exhibiting the characteristics of Ignitability, Corrosivity or Reactivity Present? No

Wastes Incompatible with backfill, seal and panel closure materials, container and packaging materials,shipping container or other wastes? No

Impenetrable Dense Objects? Yes - Unacceptable lead liner

Waste Material Items

Packaging Materials

Material Item	Quantity	Unit	Unit Wt(lbs)	Item Wt(lbs)
90 mil liner	1.000	EACH	16.000	16.000
Drum plastic bag	1.000	EACH	1.000	1.000

Waste Items byWeight

Material Item	Quantity	Unit	Unit Wt(lbs)	Item Wt(lbs)
Fiber pack	2.000	EACH	6.000	12.000
Plastic bag for waste	2.000	EACH	0.250	0.500
Drum lead-liner (1/16"x28"x72")	1.000	EACH	50.000	50.000

Waste Items by Volume

Material Item	Quantity	Unit	Unit Wt(lbs)	Item Wt(lbs)

Batch Id RTR13-00213 **Container Id** 10006010 **Analysis Id** 0000091725

Waste Parameters

Waste Parameter	Remaining Weight %	Actual Weight Lbs
Iron-based Metals/Alloys	0.000	0.000
Aluminum-based Metals/Alloys	0.000	0.000
Other metals	0.000	50.000
Other Inorganic Materials	100.000	154.770
Cellulosics	0.000	12.000
Rubber	0.000	0.000
Plastic (Waste Materials)	0.000	0.500
Inorganic matrix	0.000	0.000
Organic matrix	0.000	0.000
Soils/gravel	0.000	0.000
Steel (packaging materials)	0.000	59.000
Plastic (packaging materials)	0.000	17.000
Cellulosics Packaging	0.000	0.000

Analysis Esignature History

Esig Approval Id	User Id	Esignature Date	Comment
2624448	CTIEGS	14-SEP-2013 09:44	

AMWTP
Advanced Mixed Waste Treatment Project

AMWTP

RTR Analysis Report

Date: 22-Sep-2014
Time: 08:58

Batch Id RTR13-00213 **Container Id** 10078811 **Analysis Id** 0000091727
Container Type 001 drum, 55 Gallon (17C) **Analysis Status** Pass

RTR Date 14-SEP-2013 10:25 **Gross Weight** 445.410 **Lbs.** **Net Weight** 368.410 **Lbs**
Equipment Z-213-101 **Waste Matrix Code** S5490 **IDC** RF-374 Blacktop, Concrete and Construction Rubble
Recording Id 1RTR13-00113 **Procedure Id** INST-OI-12 **Revision** 52 **Approval Level** SPM
Is Test Pattern Resolution Ok? Yes **Start Side** A **Replicate** Yes **OIO** No
Audio Visual Ok? Yes **Operator** JCUMMINGS

Result Comment Contents of this drum is primarily construction rubble.

Package

IDC Correct Yes **Recommended IDC** **Summary Category** S5000
Idc Change Reason
Rigid Liner Present? Yes **LinerType** TYPE 2
Liner Punctured? Yes **Sharp Objects?** No
Liner Lid Present? Yes **Sharp Objects Are Protected?** Yes
Liner Lid Deformed? No **Layers Of Confinement** 2
Fill Factor 60
Bag Closure Method Twisted and Taped

Liquids

Liquid Present? No **Internal Container with Liquid** No
Internal Container with Liquid 0 pints **LA Candidate** No
Liquid Between Liner & Drum 0 pints **Containerized Liquid**
Total Liquid Amount 0 pints **Containerized Liquid Amt** 0 pints
Other Liquids 0 pints **Comment**
Prohibited Liquids Present No **Comment**

Contents-Drum or Box

	Value	Comment		Value	Comment
Lead?	No		Mercury Present?	No	
Wet Cell Batteries?	No		Explosives?	No	
Prohibited Compressed Gases?	No		PCBs Present?	No	
Aerosol Cans?	No		PCB Mass (lbs)	0	
Non-Mixed Hazardous Waste Present?	No		Sealed Containers Over 4L?	No	

Non-Radionuclide Pyrophoric Materials Present? No
Waste exhibiting the characteristics of Ignitability, Corrosivity or Reactivity Present? No
Wastes Incompatible with backfill, seal and panel closure materials, container and packaging materials,shipping container or other wastes? No
Impenetrable Dense Objects? Yes - Acceptable construction rubble

Waste Material Items

Packaging Materials

Material Item	Quantity	Unit	Unit Wt(lbs)	Item Wt(lbs)
90 mil liner	1.000	EACH	16.000	16.000
Drum plastic bag	2.000	EACH	1.000	2.000

Waste Items byWeight

Material Item	Quantity	Unit	Unit Wt(lbs)	Item Wt(lbs)

Waste Items by Volume

Material Item	Quantity	Unit	Unit Wt(lbs)	Item Wt(lbs)

Batch Id RTR13-00213 Container Id 10078811 Analysis Id 0000091727

Waste Parameters

Waste Parameter	Remaining Weight %	Actual Weight Lbs
Iron-based Metals/Alloys	0.000	0.000
Aluminum-based Metals/Alloys	0.000	0.000
Other metals	0.000	0.000
Other Inorganic Materials	100.000	368.410
Cellulosics	0.000	0.000
Rubber	0.000	0.000
Plastic (Waste Materials)	0.000	0.000
Inorganic matrix	0.000	0.000
Organic matrix	0.000	0.000
Soils/gravel	0.000	0.000
Steel (packaging materials)	0.000	59.000
Plastic (packaging materials)	0.000	18.000
Cellulosics Packaging	0.000	0.000

Analysis Esignature History

Esig Approval Id	User Id	Esignature Date	Comment
2624474	JCUMMINGS	14-SEP-2013 10:25	

AMWTP
Advanced Mixed Waste Treatment Project

AMWTP

RTR Analysis Report

Date: 22-Sep-2014
Time: 08:58

Batch Id RTR13-00213 **Container Id** 10078850 **Analysis Id** 0000091728
Container Type 001 drum, 55 Gallon (17C) **Analysis Status** Pass

RTR Date 14-SEP-2013 10:43 **Gross Weight** 266.805 Lbs. **Net Weight** 189.805 Lbs
Equipment Z-213-101 **Waste Matrix Code** S5490 **IDC** RF-374 Blacktop, Concrete and Construction Rubble
Recording Id 1RTR13-00113 **Procedure Id** INST-OI-12 **Revision** 52 **Approval Level** SPM
Is Test Pattern Resolution Ok? Yes **Start Side** A **Replicate** No **OIO** Yes
Audio Visual Ok? Yes **Operator** JCUMMINGS

Result Comment Contents of this drum is primarily construction rubble.

Package

IDC Correct Yes **Recommended IDC** **Summary Category** S5000
Idc Change Reason
Rigid Liner Present? Yes **LinerType** TYPE 2
Liner Punctured? Yes **Sharp Objects?** Yes
Liner Lid Present? Yes **Sharp Objects Are Protected?** Yes
Liner Lid Deformed? No **Layers Of Confinement** 3
Fill Factor 65
Bag Closure Method Twisted and Taped

Liquids

Liquid Present? No
Internal Container with Liquid 0 pints
Liquid Between Liner & Drum 0 pints
Total Liquid Amount 0 pints
Other Liquids 0 pints
Prohibited Liquids Present No
Internal Container with Liquid No
LA Candidate No
Containerized Liquid
Containerized Liquid Amt 0 pints
Comment
Comment

Contents-Drum or Box

	Value	Comment		Value	Comment
Lead?	No		Mercury Present?	No	
Wet Cell Batteries?	No		Explosives?	No	
Prohibited Compressed Gases?	No		PCBs Present?	No	
Aerosol Cans?	No		PCB Mass (lbs)	0	
Non-Mixed Hazardous Waste Present?	No		Sealed Containers Over 4L?	No	

Non-Radionuclide Pyrophoric Materials Present? No
Waste exhibiting the characteristics of Ignitability, Corrosivity or Reactivity Present? No
Wastes Incompatible with backfill, seal and panel closure materials, container and packaging materials,shipping container or other wastes? No
Impenetrable Dense Objects? No

Waste Material Items

Packaging Materials

Material Item	Quantity	Unit	Unit Wt(lbs)	Item Wt(lbs)
90 mil liner	1.000	EACH	16.000	16.000
Drum plastic bag	2.000	EACH	1.000	2.000

Waste Items byWeight

Material Item	Quantity	Unit	Unit Wt(lbs)	Item Wt(lbs)
misc. metal	1.000	EACH	3.000	3.000
Plastic bag for waste	1.000	EACH	0.250	0.250

Waste Items by Volume

Material Item	Quantity	Unit	Unit Wt(lbs)	Item Wt(lbs)

Batch Id RTR13-00213 **Container Id** 10078850 **Analysis Id** 0000091728

Waste Parameters

Waste Parameter	Remaining Weight %	Actual Weight Lbs
Iron-based Metals/Alloys	0.000	3.000
Aluminum-based Metals/Alloys	0.000	0.000
Other metals	0.000	0.000
Other Inorganic Materials	100.000	186.555
Cellulosics	0.000	0.000
Rubber	0.000	0.000
Plastic (Waste Materials)	0.000	0.250
Inorganic matrix	0.000	0.000
Organic matrix	0.000	0.000
Soils/gravel	0.000	0.000
Steel (packaging materials)	0.000	59.000
Plastic (packaging materials)	0.000	18.000
Cellulosics Packaging	0.000	0.000

RTR Independent Observation

Obsolete	Performed	User Name	Checklist	Answer
No	28-NOV-2013 08:56	DLEE	1.Was an independent observation performed?	Yes
			2.Were all items on the recording media identified correctly in WTS?	Yes
			3.Do you agree with the operator?	Yes

Comment OIO Checklist completed.

Independent Observation Esignature History

Esig Approval Id	User Id	Esignature Date	Comment
2661219	DLEE	28-NOV-2013 08:56	OIO Checklist completed.

Analysis Esignature History

Esig Approval Id	User Id	Esignature Date	Comment
2624500	JCUMMINGS	14-SEP-2013 10:43	

AMWTP
Advanced Mixed Waste Treatment Project

AMWTP
RTR Analysis Report

Date: 22-Sep-2014
Time: 08:58

Batch Id RTR13-00213 **Container Id** 10120127 **Analysis Id** 0000091730
Container Type A drum, 55 Gallon Drum (17H) **Analysis Status** Pass

RTR Date 14-SEP-2013 11:11 **Gross Weight** 579.915 Lbs. **Net Weight** 503.915 Lbs
Equipment Z-213-101 **Waste Matrix Code** S3114 **IDC** RF-003 Organic Setups, Oil Solids
Recording Id 1RTR13-00113 **Procedure Id** INST-OI-12 **Revision** 52 **Approval Level** SPM
Is Test Pattern Resolution Ok? Yes **Start Side** A **Replicate** No **OIO** No
Audio Visual Ok? Yes **Operator** CTIEGS

Result Comment Remaining waste appears to contain sludge.

Package

IDC Correct Yes **Recommended IDC** **Summary Category** S3000
Idc Change Reason
Rigid Liner Present? Yes **LinerType** TYPE I
Liner Punctured? Yes **Sharp Objects?** No
Liner Lid Present? Yes **Sharp Objects Are Protected?** Yes
Liner Lid Deformed? No **Layers Of Confinement** 1
Fill Factor 85
Bag Closure Method Twisted and Taped

Liquids

Liquid Present? Yes **Internal Container with Liquid** No
Internal Container with Liquid 0 pints **LA Candidate** No
Liquid Between Liner & Drum 0 pints **Containerized Liquid**
Total Liquid Amount 20 pints **Containerized Liquid Amt** 0 pints
Other Liquids 20 pints **Comment** liquid in side of waste at the second chin from top.
Prohibited Liquids Present Yes **Comment** Liquid with PCB's, >1% by volume.

Contents-Drum or Box

	Value	Comment		Value	Comment
Lead?	No		Mercury Present?	No	
Wet Cell Batteries?	No		Explosives?	No	
Prohibited Compressed Gases?	No		PCBs Present?	Yes - Prohibited	PCB IDC.
Aerosol Cans?	No		PCB Mass (lbs)	503.92	
Non-Mixed Hazardous Waste Present?	No		Sealed Containers Over 4L?	No	

Non-Radionuclide Pyrophoric Materials Present? No
Waste exhibiting the characteristics of Ignitability, Corrosivity or Reactivity Present? No
Wastes Incompatible with backfill, seal and panel closure materials, container and packaging materials,shipping container or other wastes? No
Impenetrable Dense Objects? No

Waste Material Items

Packaging Materials

Material Item	Quantity	Unit	Unit Wt(lbs)	Item Wt(lbs)
90 mil liner	1.000	EACH	16.000	16.000
Drum plastic bag	1.000	EACH	1.000	1.000

Waste Items byWeight

Material Item	Quantity	Unit	Unit Wt(lbs)	Item Wt(lbs)

Waste Items by Volume

Material Item	Quantity	Unit	Unit Wt(lbs)	Item Wt(lbs)
Liquids for Organic Matrix	20.000	PINTS	1.000	20.000

Batch Id RTR13-00213 **Container Id** 10120127 **Analysis Id** 0000091730

Waste Parameters

Waste Parameter	Remaining Weight %	Actual Weight Lbs
Iron-based Metals/Alloys	0.000	0.000
Aluminum-based Metals/Alloys	0.000	0.000
Other metals	0.000	0.000
Other Inorganic Materials	0.000	0.000
Cellulosics	0.000	0.000
Rubber	0.000	0.000
Plastic (Waste Materials)	0.000	0.000
Inorganic matrix	0.000	0.000
Organic matrix	100.000	503.915
Soils/gravel	0.000	0.000
Steel (packaging materials)	0.000	59.000
Plastic (packaging materials)	0.000	17.000
Cellulosics Packaging	0.000	0.000

Analysis Esignature History

Esig Approval Id	User Id	Esignature Date	Comment
2624520	CTIEGS	14-SEP-2013 11:11	

AMWTP
Advanced Mixed Waste Treatment Project

AMWTP
RTR Analysis Report

Date: 22-Sep-2014
Time: 08:58

Batch Id RTR13-00213 **Container Id** 10242828 **Analysis Id** 0000091732
Container Type A drum, 55 Gallon Drum (17H) **Analysis Status** Pass

RTR Date 14-SEP-2013 11:27 **Gross Weight** 187.425 Lbs. **Net Weight** 126.425 Lbs
Equipment Z-213-101 **Waste Matrix Code** S5300 **IDC** RF-337 Plastics, Teflon, Washables, PVC
Recording Id 1RTR13-00113 **Procedure Id** INST-OI-12 **Revision** 52 **Approval Level** SPM
Is Test Pattern Resolution Ok? Yes **Start Side** A **Replicate** No **OIO** No
Audio Visual Ok? Yes **Operator** CTIEGS

Result Comment Remaining waste appears to contain plastic sheeting, plastic PPE, poly bottles.
Rework: Corrected entry in waste paramers for plastic bags for waste. cjs 11/29/13

Package

IDC Correct Yes **Recommended IDC** **Summary Category** S5000
Idc Change Reason
Rigid Liner Present? No **LinerType** NO LINER
Liner Punctured? N/A **Sharp Objects?** No
Liner Lid Present? No **Sharp Objects Are Protected?** Yes
Liner Lid Deformed? N/A **Layers Of Confinement** 3
Fill Factor 95
Bag Closure Method Twisted and Taped

Liquids

Liquid Present? Yes **Internal Container with Liquid** No
Internal Container with Liquid 0 pints **LA Candidate** No
Liquid Between Liner & Drum 0 pints **Containerized Liquid**
Total Liquid Amount .03 pints **Containerized Liquid Amt** 0 pints
Other Liquids .03 pints **Comment** liquid in pocket at top of waste.
Prohibited Liquids Present No **Comment**

Contents-Drum or Box

	Value	Comment		Value	Comment
Lead?	No		Mercury Present?	No	
Wet Cell Batteries?	No		Explosives?	No	
Prohibited Compressed Gases?	No		PCBs Present?	No	
Aerosol Cans?	No		PCB Mass (lbs)	0	
Non-Mixed Hazardous Waste Present?	No		Sealed Containers Over 4L?	No	

Non-Radionuclide Pyrophoric Materials Present? No
Waste exhibiting the characteristics of Ignitability, Corrosivity or Reactivity Present? No
Wastes Incompatible with backfill, seal and panel closure materials, container and packaging materials,shipping container or other wastes? No
Impenetrable Dense Objects? No

Waste Material Items

Packaging Materials

Material Item	Quantity	Unit	Unit Wt(lbs)	Item Wt(lbs)
Drum plastic bag	2.000	EACH	1.000	2.000

Waste Items byWeight

Material Item	Quantity	Unit	Unit Wt(lbs)	Item Wt(lbs)
Cardboard liner	1.000	EACH	4.000	4.000
Plastic bag for waste	1.000	EACH	0.250	0.250

Waste Items by Volume

Material Item	Quantity	Unit	Unit Wt(lbs)	Item Wt(lbs)
Vermiculite (95 gm/liter) .125 lb/pint	32.000	PINTS	0.125	4.000
Liquids for Other Inorganics	0.030	PINTS	1.000	0.030

Batch Id RTR13-00213 **Container Id** 10242828 **Analysis Id** 0000091732

Waste Parameters

Waste Parameter	Remaining Weight %	Actual Weight Lbs
Iron-based Metals/Alloys	0.000	0.000
Aluminum-based Metals/Alloys	0.000	0.000
Other metals	0.000	0.000
Other Inorganic Materials	0.000	4.030
Cellulosics	0.000	4.000
Rubber	0.000	0.000
Plastic (Waste Materials)	100.000	118.395
Inorganic matrix	0.000	0.000
Organic matrix	0.000	0.000
Soils/gravel	0.000	0.000
Steel (packaging materials)	0.000	59.000
Plastic (packaging materials)	0.000	2.000
Cellulosics Packaging	0.000	0.000

Analysis Esignature History

Esig Approval Id	User Id	Esignature Date	Comment
2661247	CSIMMONS	29-NOV-2013 09:32	Rework
2624527	CTIEGS	14-SEP-2013 11:27	

Batch Id RTR13-00213 **Container Id** 10006155 **Analysis Id** 0000091734

Container Type 001 drum, 55 Gallon (17C) **Analysis Status** Non Reportable

Analysis Esignature History

Esig Approval Id	User Id	Esignature Date	Comment

Batch Id RTR13-00213 **Container Id** 10006102 **Analysis Id** 0000091736
Container Type 001 drum, 55 Gallon (17C) **Analysis Status** Pass

RTR Date 14-SEP-2013 12:03 **Gross Weight** 242.550 Lbs. **Net Weight** 162.550 Lbs
Equipment Z-213-101 **Waste Matrix Code** S5410 **IDC** RF-376 Cemented Insulation and Filter Media
Recording Id RTR13-00113 **Procedure Id** INST-OI-12 **Revision** 52 **Approval Level** SPM
Is Test Pattern Resolution Ok? Yes **Start Side** A **Replicate** No **OIO** No
Audio Visual Ok? Yes **Operator** CTIEGS
Result Comment Remaining waste appears to contain filter media, absolute filters.

Package

IDC Correct Yes **Recommended IDC** **Summary Category** S5000
Idc Change Reason
Rigid Liner Present? Yes **LinerType** TYPE 2
Liner Punctured? Yes **Sharp Objects?** No
Liner Lid Present? Yes **Sharp Objects Are Protected?** Yes
Liner Lid Deformed? No **Layers Of Confinement** 3
Fill Factor 85
Bag Closure Method Twisted and Taped

Liquids

Liquid Present? No **Internal Container with Liquid** No
Internal Container with Liquid 0 pints **LA Candidate** No
Liquid Between Liner & Drum 0 pints **Containerized Liquid**
Total Liquid Amount 0 pints **Containerized Liquid Amt** 0 pints
Other Liquids 0 pints **Comment**
Prohibited Liquids Present No **Comment**

Contents-Drum or Box

	Value	Comment		Value	Comment
Lead?	Yes, Rejected	lead liner	Mercury Present?	No	
Wet Cell Batteries?	No		Explosives?	No	
Prohibited Compressed Gases?	No		PCBs Present?	No	
Aerosol Cans?	No		PCB Mass (lbs)	0	
Non-Mixed Hazardous Waste Present?	No		Sealed Containers Over 4L?	No	

Non-Radionuclide Pyrophoric Materials Present? No
Waste exhibiting the characteristics of Ignitability, Corrosivity or Reactivity Present? No
Wastes Incompatible with backfill, seal and panel closure materials, container and packaging materials,shipping container or other wastes? No
Impenetrable Dense Objects? Yes - Unacceptable lead liner

Waste Material Items

Packaging Materials

Material Item	Quantity	Unit	Unit Wt(lbs)	Item Wt(lbs)
90 mil liner	1.000	EACH	16.000	16.000
Drum plastic bag	1.000	EACH	1.000	1.000
O-ring plastic bag	1.000	EACH	4.000	4.000

Waste Items byWeight

Material Item	Quantity	Unit	Unit Wt(lbs)	Item Wt(lbs)
Plastic bag for waste	2.000	EACH	0.250	0.500
Drum lead-liner (1/16"x28"x72")	1.000	EACH	50.000	50.000

Waste Items by Volume

Material Item	Quantity	Unit	Unit Wt(lbs)	Item Wt(lbs)

Batch Id RTR13-00213 **Container Id** 10006102 **Analysis Id** 0000091736

Waste Parameters

Waste Parameter	Remaining Weight %	Actual Weight Lbs
Iron-based Metals/Alloys	0.000	0.000
Aluminum-based Metals/Alloys	10.000	11.205
Other metals	0.000	50.000
Other Inorganic Materials	0.000	0.000
Cellulosics	90.000	100.845
Rubber	0.000	0.000
Plastic (Waste Materials)	0.000	0.500
Inorganic matrix	0.000	0.000
Organic matrix	0.000	0.000
Soils/gravel	0.000	0.000
Steel (packaging materials)	0.000	59.000
Plastic (packaging materials)	0.000	21.000
Cellulosics Packaging	0.000	0.000

Analysis Esignature History

Esig Approval Id	User Id	Esignature Date	Comment
2624609	CTIEGS	14-SEP-2013 14:16	
2624558	CTIEGS	14-SEP-2013 12:03	

AMWTP
Advanced Mixed Waste Treatment Project

AMWTP
RTR Analysis Report

Date: 22-Sep-2014
Time: 08:58

Batch Id RTR13-00213 **Container Id** 10490232 **Analysis Id** 0000091737

Container Type 425 drum, 55 Gallon (UN1A2/X425/S), DOT/WIPP approved **Analysis Status** Pass

RTR Date 14-SEP-2013 13:12 **Gross Weight** 522.585 Lbs. **Net Weight** 463.585 Lbs.
Equipment Z-213-101 **Waste Matrix Code** S4200 **IDC** BN-522 AMWTP Non-PCB Soil
Recording Id 1RTR13-00113 **Procedure Id** INST-OI-12 **Revision** 52 **Approval Level** SPM
Is Test Pattern Resolution Ok? Yes **Start Side** A **Replicate** No **OIO** No
Audio Visual Ok? Yes **Operator** JCUMMINGS

Result Comment Contents of this drum is primarily soil.
Rework: Corrected Impenetrable Dense Objects question. cjs 11/29/13

Package

IDC Correct Yes **Recommended IDC** **Summary Category** S4000
Idc Change Reason
Rigid Liner Present? No **LinerType** NO LINER
Liner Punctured? N/A **Sharp Objects?** No
Liner Lid Present? No **Sharp Objects Are Protected?** Yes
Liner Lid Deformed? N/A **Layers Of Confinement** 0
Fill Factor 70
Bag Closure Method No Bags

Liquids

Liquid Present? No **Internal Container with Liquid** No
Internal Container with Liquid 0 pints **LA Candidate** No
Liquid Between Liner & Drum 0 pints **Containerized Liquid**
Total Liquid Amount 0 pints **Containerized Liquid Amt** 0 pints
Other Liquids 0 pints **Comment**
Prohibited Liquids Present No **Comment**

Contents-Drum or Box

	Value	Comment		Value	Comment
Lead?	No		Mercury Present?	No	
Wet Cell Batteries?	No		Explosives?	No	
Prohibited Compressed Gases?	No		PCBs Present?	No	
Aerosol Cans?	No		PCB Mass (lbs)	0	
Non-Mixed Hazardous Waste Present?	No		Sealed Containers Over 4L?	No	

Non-Radionuclide Pyrophoric Materials Present? No
Waste exhibiting the characteristics of Ignitability, Corrosivity or Reactivity Present? No
Wastes Incompatible with backfill, seal and panel closure materials, container and packaging materials,shipping container or other wastes? No
Impenetrable Dense Objects? Yes - Unacceptable soil

Waste Material Items

Packaging Materials

Material Item	Quantity	Unit	Unit Wt(lbs)	Item Wt(lbs)

Waste Items byWeight

Material Item	Quantity	Unit	Unit Wt(lbs)	Item Wt(lbs)

Waste Items by Volume

Material Item	Quantity	Unit	Unit Wt(lbs)	Item Wt(lbs)

Batch Id RTR13-00213 **Container Id** 10490232 **Analysis Id** 0000091737

Waste Parameters

Waste Parameter	Remaining Weight %	Actual Weight Lbs
Iron-based Metals/Alloys	0.000	0.000
Aluminum-based Metals/Alloys	0.000	0.000
Other metals	0.000	0.000
Other Inorganic Materials	0.000	0.000
Cellulosics	0.000	0.000
Rubber	0.000	0.000
Plastic (Waste Materials)	0.000	0.000
Inorganic matrix	0.000	0.000
Organic matrix	0.000	0.000
Soils/gravel	100.000	463.585
Steel (packaging materials)	0.000	59.000
Plastic (packaging materials)	0.000	0.000
Cellulosics Packaging	0.000	0.000

Analysis Esignature History

Esig Approval Id	User Id	Esignature Date	Comment
2661250	CSIMMONS	29-NOV-2013 09:35	Rework
2624564	JCUMMINGS	14-SEP-2013 13:12	

Batch Id RTR13-00213 **Container Id** 10499030 **Analysis Id** 0000091739

Container Type 425 drum, 55 Gallon (UN1A2/X425/S), DOT/WIPP approved **Analysis Status** Pass

RTR Date 14-SEP-2013 13:38 **Gross Weight** 68.355 Lbs. **Net Weight** 8.355 Lbs

Equipment Z-213-101 **Waste Matrix Code** S5490 **IDC** BN-500 Newly Generated Debris (not BN-508)

Recording Id 1RTR13-00113 **Procedure Id** INST-OI-12 **Revision** 52 **Approval Level** SPM

Is Test Pattern Resolution Ok? Yes **Start Side** A **Replicate** No **OIO** No

Audio Visual Ok? Yes **Operator** JCUMMINGS

Result Comment Contents of this drum is primarily filters.
Rework: Corrected fill factor. cjs 11/29/13

Package

IDC Correct Yes **Recommended IDC** **Summary Category** S5000

Idc Change Reason

Rigid Liner Present? No **LinerType** NO LINER

Liner Punctured? N/A **Sharp Objects?** No

Liner Lid Present? No **Sharp Objects Are Protected?** Yes

Liner Lid Deformed? N/A **Layers Of Confinement** 2

Fill Factor 85

Bag Closure Method Twisted and Taped

Liquids

Liquid Present? No **Internal Container with Liquid** No

Internal Container with Liquid 0 pints **LA Candidate** No

Liquid Between Liner & Drum 0 pints **Containerized Liquid**

Total Liquid Amount 0 pints **Containerized Liquid Amt** 0 pints

Other Liquids 0 pints **Comment**

Prohibited Liquids Present No **Comment**

Contents-Drum or Box

	Value	Comment		Value	Comment
Lead?	No		**Mercury Present?**	No	
Wet Cell Batteries?	No		**Explosives?**	No	
Prohibited Compressed Gases?	No		**PCBs Present?**	No	
Aerosol Cans?	No		**PCB Mass (lbs)**	0	
Non-Mixed Hazardous Waste Present?	No		**Sealed Containers Over 4L?**	No	

Non-Radionuclide Pyrophoric Materials Present? No

Waste exhibiting the characteristics of Ignitability, Corrosivity or Reactivity Present? No

Wastes Incompatible with backfill, seal and panel closure materials, container and packaging materials,shipping container or other wastes? No

Impenetrable Dense Objects? No

Waste Material Items

Packaging Materials

Material Item	Quantity	Unit	Unit Wt(lbs)	Item Wt(lbs)
Drum plastic bag	1.000	EACH	1.000	1.000

Waste Items byWeight

Material Item	Quantity	Unit	Unit Wt(lbs)	Item Wt(lbs)
Plastic bag for waste	2.000	EACH	0.250	0.500

Waste Items by Volume

Material Item	Quantity	Unit	Unit Wt(lbs)	Item Wt(lbs)

Batch Id RTR13-00213 **Container Id** 10499030 **Analysis Id** 0000091739

Waste Parameters

Waste Parameter	Remaining Weight %	Actual Weight Lbs
Iron-based Metals/Alloys	0.000	0.000
Aluminum-based Metals/Alloys	0.000	0.000
Other metals	0.000	0.000
Other Inorganic Materials	0.000	0.000
Cellulosics	100.000	7.855
Rubber	0.000	0.000
Plastic (Waste Materials)	0.000	0.500
Inorganic matrix	0.000	0.000
Organic matrix	0.000	0.000
Soils/gravel	0.000	0.000
Steel (packaging materials)	0.000	59.000
Plastic (packaging materials)	0.000	1.000
Cellulosics Packaging	0.000	0.000

Analysis Esignature History

Esig Approval Id	User Id	Esignature Date	Comment
2661252	CSIMMONS	29-NOV-2013 09:37	Rework
2624568	JCUMMINGS	14-SEP-2013 13:38	

AMWTP
Advanced Mixed Waste Treatment Project

AMWTP
RTR Analysis Report

Date: 22-Sep-2014
Time: 08:58

Batch Id RTR13-00213 **Container Id** 10078659 **Analysis Id** 0000091740
Container Type 001 drum, 55 Gallon (17C) **Analysis Status** Pass

RTR Date 14-SEP-2013 13:52 **Gross Weight** 326.340 Lbs. **Net Weight** 249.340 Lbs
Equipment Z-213-101 **Waste Matrix Code** S5490 **IDC** RF-374 Blacktop, Concrete and Construction Rubble
Recording Id IRTR13-00113 **Procedure Id** INST-OI-12 **Revision** 52 **Approval Level** SPM
Is Test Pattern Resolution Ok? Yes **Start Side** A **Replicate** No **OIO** No
Audio Visual Ok? Yes **Operator** JCUMMINGS
Result Comment Contents of this drum is primarily cinder block.

Package

IDC Correct Yes **Recommended IDC** **Summary Category** S5000
Idc Change Reason
Rigid Liner Present? Yes **LinerType** TYPE 2
Liner Punctured? Yes **Sharp Objects?** No
Liner Lid Present? Yes **Sharp Objects Are Protected?** Yes
Liner Lid Deformed? No **Layers Of Confinement** 2
Fill Factor 85
Bag Closure Method Twisted and Taped

Liquids

Liquid Present? No **Internal Container with Liquid** No
Internal Container with Liquid 0 pints **LA Candidate** No
Liquid Between Liner & Drum 0 pints **Containerized Liquid**
Total Liquid Amount 0 pints **Containerized Liquid Amt** 0 pints
Other Liquids 0 pints **Comment**
Prohibited Liquids Present No **Comment**

Contents-Drum or Box

	Value	Comment		Value	Comment
Lead?	No		Mercury Present?	No	
Wet Cell Batteries?	No		Explosives?	No	
Prohibited Compressed Gases?	No		PCBs Present?	No	
Aerosol Cans?	No		PCB Mass (lbs)	0	
Non-Mixed Hazardous Waste Present?	No		Sealed Containers Over 4L?	No	

Non-Radionuclide Pyrophoric Materials Present? No
Waste exhibiting the characteristics of Ignitability, Corrosivity or Reactivity Present? No
Wastes Incompatible with backfill, seal and panel closure materials, container and packaging materials,shipping container or other wastes? No
Impenetrable Dense Objects? No

Waste Material Items

Packaging Materials

Material Item	Quantity	Unit	Unit Wt(lbs)	Item Wt(lbs)
90 mil liner	1.000	EACH	16.000	16.000
Drum plastic bag	2.000	EACH	1.000	2.000

Waste Items byWeight

Material Item	Quantity	Unit	Unit Wt(lbs)	Item Wt(lbs)

Waste Items by Volume

Material Item	Quantity	Unit	Unit Wt(lbs)	Item Wt(lbs)

Batch Id RTR13-00213 **Container Id** 10078659 **Analysis Id** 0000091740

Waste Parameters

Waste Parameter	Remaining Weight %	Actual Weight Lbs
Iron-based Metals/Alloys	0.000	0.000
Aluminum-based Metals/Alloys	0.000	0.000
Other metals	0.000	0.000
Other Inorganic Materials	100.000	249.340
Cellulosics	0.000	0.000
Rubber	0.000	0.000
Plastic (Waste Materials)	0.000	0.000
Inorganic matrix	0.000	0.000
Organic matrix	0.000	0.000
Soils/gravel	0.000	0.000
Steel (packaging materials)	0.000	59.000
Plastic (packaging materials)	0.000	18.000
Cellulosics Packaging	0.000	0.000

Analysis Esignature History

Esig Approval Id	User Id	Esignature Date	Comment
2624578	JCUMMINGS	14-SEP-2013 13:52	

Batch Id RTR13-00213 **Container Id** 10003289 **Analysis Id** 0000091741

Container Type 001 drum, 55 Gallon (17C) **Analysis Status** Pass

RTR Date 14-SEP-2013 14:11 **Gross Weight** 116.870 Lbs. **Net Weight** 40.870 Lbs

Equipment Z-213-101 **Waste Matrix Code** S5300 **IDC** RF-336 Paper and Rags-Moist

Recording Id RTR13-00113 **Procedure Id** INST-OI-12 **Revision** 52 **Approval Level** SPM

Is Test Pattern Resolution Ok? Yes **Start Side** A **Replicate** No **OIO** No

Audio Visual Ok? Yes **Operator** JCUMMINGS

Result Comment Contents of this drum is primarily paper and rags as cardboard.

Package

IDC Correct Yes **Recommended IDC** **Summary Category** S5000

Idc Change Reason

Rigid Liner Present? Yes **LinerType** TYPE 2

Liner Punctured? Yes **Sharp Objects?** No

Liner Lid Present? Yes **Sharp Objects Are Protected?** Yes

Liner Lid Deformed? No **Layers Of Confinement** 2

Fill Factor 90

Bag Closure Method Twisted and Taped

Liquids

Liquid Present? No **Internal Container with Liquid** No

Internal Container with Liquid 0 pints **LA Candidate** No

Liquid Between Liner & Drum 0 pints **Containerized Liquid**

Total Liquid Amount 0 pints **Containerized Liquid Amt** 0 pints

Other Liquids 0 pints **Comment**

Prohibited Liquids Present No **Comment**

Contents-Drum or Box

	Value	Comment		Value	Comment
Lead?	No		Mercury Present?	No	
Wet Cell Batteries?	No		Explosives?	No	
Prohibited Compressed Gases?	No		PCBs Present?	No	
Aerosol Cans?	No		PCB Mass (lbs)	0	
Non-Mixed Hazardous Waste Present?	No		Sealed Containers Over 4L?	No	

Non-Radionuclide Pyrophoric Materials Present? No

Waste exhibiting the characteristics of Ignitability, Corrosivity or Reactivity Present? No

Wastes Incompatible with backfill, seal and panel closure materials, container and packaging materials,shipping container or other wastes? No

Impenetrable Dense Objects? No

Waste Material Items

Packaging Materials

Material Item	Quantity	Unit	Unit Wt(lbs)	Item Wt(lbs)
90 mil liner	1.000	EACH	16.000	16.000
Drum plastic bag	1.000	EACH	1.000	1.000

Waste Items byWeight

Material Item	Quantity	Unit	Unit Wt(lbs)	Item Wt(lbs)
misc. metal	1.000	EACH	2.000	2.000
Plastic bag for waste	1.000	EACH	0.250	0.250

Waste Items by Volume

Material Item	Quantity	Unit	Unit Wt(lbs)	Item Wt(lbs)
Vermiculite (95 gm/liter) .125 lb/pint	40.000	PINTS	0.125	5.000

Batch Id RTR13-00213 **Container Id** 10003289 **Analysis Id** 0000091741

Waste Parameters

Waste Parameter	Remaining Weight %	Actual Weight Lbs
Iron-based Metals/Alloys	0.000	2.000
Aluminum-based Metals/Alloys	0.000	0.000
Other metals	0.000	0.000
Other Inorganic Materials	0.000	5.000
Cellulosics	100.000	33.620
Rubber	0.000	0.000
Plastic (Waste Materials)	0.000	0.250
Inorganic matrix	0.000	0.000
Organic matrix	0.000	0.000
Soils/gravel	0.000	0.000
Steel (packaging materials)	0.000	59.000
Plastic (packaging materials)	0.000	17.000
Cellulosics Packaging	0.000	0.000

Analysis Esignature History

Esig Approval Id	User Id	Esignature Date	Comment
2624610	JCUMMINGS	14-SEP-2013 14:16	
2624605	JCUMMINGS	14-SEP-2013 14:12	
2624604	JCUMMINGS	14-SEP-2013 14:11	

Batch Id RTR13-00213 **Container Id** 10078795 **Analysis Id** 0000091743

Container Type 001 drum, 55 Gallon (17C) **Analysis Status** Pass

RTR Date 14-SEP-2013 14:52 **Gross Weight** 266.805 Lbs. **Net Weight** 189.805 Lbs

Equipment Z-213-101 **Waste Matrix Code** S5490 **IDC** RF-374 Blacktop, Concrete and Construction Rubble

Recording Id RTR13-00113 **Procedure Id** INST-OI-12 **Revision** 52 **Approval Level** SPM

Is Test Pattern Resolution Ok? Yes **Start Side** A **Replicate** No **OIO** No

Audio Visual Ok? Yes **Operator** JCUMMINGS

Result Comment Contents of this drum is primarily concrete.

Package

IDC Correct Yes **Recommended IDC** **Summary Category** S5000

Idc Change Reason

Rigid Liner Present? Yes **LinerType** TYPE 2

Liner Punctured? Yes **Sharp Objects?** No

Liner Lid Present? Yes **Sharp Objects Are Protected?** Yes

Liner Lid Deformed? No **Layers Of Confinement** 3

Fill Factor 70

Bag Closure Method Twisted and Taped

Liquids

Liquid Present? No **Internal Container with Liquid** No

Internal Container with Liquid 0 pints **LA Candidate** No

Liquid Between Liner & Drum 0 pints **Containerized Liquid**

Containerized Liquid Amt 0 pints

Total Liquid Amount 0 pints

Other Liquids 0 pints **Comment**

Prohibited Liquids Present No **Comment**

Contents-Drum or Box

	Value	Comment		Value	Comment
Lead?	No		Mercury Present?	No	
Wet Cell Batteries?	No		Explosives?	No	
Prohibited Compressed Gases?	No		PCBs Present?	No	
Aerosol Cans?	No		PCB Mass (lbs)	0	
Non-Mixed Hazardous Waste Present?	No		Sealed Containers Over 4L?	No	

Non-Radionuclide Pyrophoric Materials Present? No

Waste exhibiting the characteristics of Ignitability, Corrosivity or Reactivity Present? No

Wastes Incompatible with backfill, seal and panel closure materials, container and packaging materials,shipping container or other wastes? No

Impenetrable Dense Objects? No

Waste Material Items

Packaging Materials

Material Item	Quantity	Unit	Unit Wt(lbs)	Item Wt(lbs)
90 mil liner	1.000	EACH	16.000	16.000
Drum plastic bag	2.000	EACH	1.000	2.000

Waste Items byWeight

Material Item	Quantity	Unit	Unit Wt(lbs)	Item Wt(lbs)
Plastic bag for waste	1.000	EACH	0.250	0.250

Waste Items by Volume

Material Item	Quantity	Unit	Unit Wt(lbs)	Item Wt(lbs)
Vermiculite (95 gm/liter) .125 lb/pint	12.000	PINTS	0.125	1.500

Batch Id RTR13-00213 **Container Id** 10078795 **Analysis Id** 0000091743

Waste Parameters

Waste Parameter	Remaining Weight %	Actual Weight Lbs
Iron-based Metals/Alloys	0.000	0.000
Aluminum-based Metals/Alloys	0.000	0.000
Other metals	0.000	0.000
Other Inorganic Materials	100.000	189.555
Cellulosics	0.000	0.000
Rubber	0.000	0.000
Plastic (Waste Materials)	0.000	0.250
Inorganic matrix	0.000	0.000
Organic matrix	0.000	0.000
Soils/gravel	0.000	0.000
Steel (packaging materials)	0.000	59.000
Plastic (packaging materials)	0.000	18.000
Cellulosics Packaging	0.000	0.000

Analysis Esignature History

Esig Approval Id	User Id	Esignature Date	Comment
2624635	JCUMMINGS	14-SEP-2013 14:52	

AMWTP
Advanced Mixed Waste Treatment Project

AMWTP
RTR Analysis Report

Date: 22-Sep-2014
Time: 08:58

Batch Id RTR13-00213 **Container Id** 10004612 **Analysis Id** 0000091747
Container Type 001 drum, 55 Gallon (17C) **Analysis Status** Pass

RTR Date 14-SEP-2013 15:08 **Gross Weight** 606.380 **Lbs.** **Net Weight** 529.380 **Lbs.**
Equipment Z-213-101 **Waste Matrix Code** S5112 **IDC** RF-480 Non-special Source Metal
Recording Id 1RTR13-00113 **Procedure Id** INST-OI-12 **Revision** 52 **Approval Level** SPM
Is Test Pattern Resolution Ok? Yes **Start Side** A **Replicate** No **OIO** No
Audio Visual Ok? Yes **Operator** JCUMMINGS

Result Comment Contents of this drum is primarily metal tubing.

Package

IDC Correct Yes **Recommended IDC** **Summary Category** S5000
Idc Change Reason
Rigid Liner Present? Yes **LinerType** TYPE 2
Liner Punctured? Yes **Sharp Objects?** No
Liner Lid Present? Yes **Sharp Objects Are Protected?** Yes
Liner Lid Deformed? No **Layers Of Confinement** 2
Fill Factor 90
Bag Closure Method Twisted and Taped

Liquids

Liquid Present? No **Internal Container with Liquid** No
Internal Container with Liquid 0 pints **LA Candidate** No
Liquid Between Liner & Drum 0 pints **Containerized Liquid**
Total Liquid Amount 0 pints **Containerized Liquid Amt** 0 pints
Other Liquids 0 pints **Comment**
Prohibited Liquids Present No **Comment**

Contents-Drum or Box

	Value	Comment		Value	Comment
Lead?	No		Mercury Present?	No	
Wet Cell Batteries?	No		Explosives?	No	
Prohibited Compressed Gases?	No		PCBs Present?	No	
Aerosol Cans?	No		PCB Mass (lbs)	0	
Non-Mixed Hazardous Waste Present?	No		Sealed Containers Over 4L?	No	

Non-Radionuclide Pyrophoric Materials Present? No
Waste exhibiting the characteristics of Ignitability, Corrosivity or Reactivity Present? No
Wastes Incompatible with backfill, seal and panel closure materials, container and packaging materials,shipping container or other wastes? No
Impenetrable Dense Objects? No

Waste Material Items

Packaging Materials

Material Item	Quantity	Unit	Unit Wt(lbs)	Item Wt(lbs)
90 mil liner	1.000	EACH	16.000	16.000
Drum plastic bag	2.000	EACH	1.000	2.000

Waste Items byWeight

Material Item	Quantity	Unit	Unit Wt(lbs)	Item Wt(lbs)
poly bottles	1.000	EACH	2.000	2.000

Waste Items by Volume

Material Item	Quantity	Unit	Unit Wt(lbs)	Item Wt(lbs)

Batch Id RTR13-00213 Container Id 10004612 Analysis Id 0000091747

Waste Parameters

Waste Parameter	Remaining Weight %	Actual Weight Lbs
Iron-based Metals/Alloys	100.000	527.380
Aluminum-based Metals/Alloys	0.000	0.000
Other metals	0.000	0.000
Other Inorganic Materials	0.000	0.000
Cellulosics	0.000	0.000
Rubber	0.000	0.000
Plastic (Waste Materials)	0.000	2.000
Inorganic matrix	0.000	0.000
Organic matrix	0.000	0.000
Soils/gravel	0.000	0.000
Steel (packaging materials)	0.000	59.000
Plastic (packaging materials)	0.000	18.000
Cellulosics Packaging	0.000	0.000

Analysis Esignature History

Esig Approval Id	User Id	Esignature Date	Comment
2624646	JCUMMINGS	14-SEP-2013 15:08	

AMWTP
Advanced Mixed Waste Treatment Project

AMWTP

RTR Analysis Report

Date: 22-Sep-2014
Time: 08:58

Batch Id RTR13-00213 **Container Id** 10135267 **Analysis Id** 0000091749
Container Type A drum, 55 Gallon Drum (17H) **Analysis Status** Pass

RTR Date 14-SEP-2013 15:31 **Gross Weight** 163.170 Lbs. **Net Weight** 102.170 Lbs
Equipment Z-213-101 **Waste Matrix Code** S5112 **IDC** RF-480 Non-special Source Metal
Recording Id IRTR13-00113 **Procedure Id** INST-OI-12 **Revision** 52 **Approval Level** SPM
Is Test Pattern Resolution Ok? Yes **Start Side** A **Replicate** No **OIO** No
Audio Visual Ok? Yes **Operator** JCUMMINGS

Result Comment Contents of this drum is primarily metal debris as tools, sheetmetal and metal cans.

Package

IDC Correct Yes **Recommended IDC** **Summary Category** S5000
Idc Change Reason
Rigid Liner Present? No **LinerType** NO LINER
Liner Punctured? N/A **Sharp Objects?** No
Liner Lid Present? No **Sharp Objects Are Protected?** Yes
Liner Lid Deformed? N/A **Layers Of Confinement** 3
Fill Factor 65
Bag Closure Method Twisted and Taped

Liquids

Liquid Present? No **Internal Container with Liquid** No
Internal Container with Liquid 0 pints **LA Candidate** No
Liquid Between Liner & Drum 0 pints **Containerized Liquid**
Total Liquid Amount 0 pints **Containerized Liquid Amt** 0 pints
Other Liquids 0 pints **Comment**
Prohibited Liquids Present No **Comment**

Contents-Drum or Box

	Value	Comment		Value	Comment
Lead?	Yes, Acceptable	lead sheeting	Mercury Present?	No	
Wet Cell Batteries?	No		Explosives?	No	
Prohibited Compressed Gases?	No		PCBs Present?	No	
Aerosol Cans?	No		PCB Mass (lbs)	0	
Non-Mixed Hazardous Waste Present?	No		Sealed Containers Over 4L?	No	

Non-Radionuclide Pyrophoric Materials Present? No
Waste exhibiting the characteristics of Ignitability, Corrosivity or Reactivity Present? No
Wastes Incompatible with backfill, seal and panel closure materials, container and packaging materials,shipping container or other wastes? No
Impenetrable Dense Objects? No

Waste Material Items

Packaging Materials

Material Item	Quantity	Unit	Unit Wt(lbs)	Item Wt(lbs)
Drum plastic bag	2.000	EACH	1.000	2.000

Waste Items byWeight

Material Item	Quantity	Unit	Unit Wt(lbs)	Item Wt(lbs)
d- Cell batteries	1.000	EACH	0.500	0.500
lead sheeting	1.000	EACH	5.000	5.000
Cardboard liner	1.000	EACH	4.000	4.000
Fiber pack	1.000	EACH	6.000	6.000
Plastic bag for waste	1.000	EACH	0.250	0.250

Waste Items by Volume

Material Item	Quantity	Unit	Unit Wt(lbs)	Item Wt(lbs)

Batch Id RTR13-00213 **Container Id** 10135267 **Analysis Id** 0000091749

Waste Parameters

Waste Parameter	Remaining Weight %	Actual Weight Lbs
Iron-based Metals/Alloys	100.000	86.420
Aluminum-based Metals/Alloys	0.000	0.000
Other metals	0.000	5.500
Other Inorganic Materials	0.000	0.000
Cellulosics	0.000	10.000
Rubber	0.000	0.000
Plastic (Waste Materials)	0.000	0.250
Inorganic matrix	0.000	0.000
Organic matrix	0.000	0.000
Soils/gravel	0.000	0.000
Steel (packaging materials)	0.000	59.000
Plastic (packaging materials)	0.000	2.000
Cellulosics Packaging	0.000	0.000

Analysis Esignature History

Esig Approval Id	User Id	Esignature Date	Comment
2624661	JCUMMINGS	14-SEP-2013 15:31	

-----End of RTR Analysis Report------

AMWTP

Advanced Mixed Waste Treatment Project

AMWTP

RTR Replicate Comparison Report

Date: 22-Sep-2014

Time: 08:59

RTR Batch Id: RTR13-00213 **Container Id:** 10078811 **Equipment Id:** Z-213-101

Container type Description: drum, 55 Gallon (17C) Gen-IDC: RF-374 Gross Weight(Lbs): 445.41

	Original Analysis		Replicate Analysis	
Analysis Id / Date:	0000091719	14-SEP-2013 08:58	0000091727	14-SEP-2013 10:25
Procedure /Revision:	INST-OI-12	52	INST-OI-12	52
Recording Media Id:	1RTR13-00113		1RTR13-00113	
Starting Position:	A		A	
Is Test Pattern Resolution Ok?	Y		Y	
Audio Visual Ok?	Y		Y	
Personnel Name:	CINDY TIEGS		JOHN CUMMINGS	
IDC Ok? / Recommended IDC:	Y		Y	
IDC Change Reason:				
Summary Category / Waste matrix Code:	S5000	S5490	S5000	S5490
Packaging				
Rigid Liner Present?	Y		Y	
Liner Type Code:	TYPE 2		TYPE 2	
Liner Punctured:	Y		Y	
Liner Lid Deformed:	N		N	
Layers Of Confinement:	2		2	
Sharp Objects?	N		N	
Sharp Objects Protected?	Y		Y	
Fill Factor(%):	65		60	
Bag Closure Method:	Twisted and Taped		Twisted and Taped	
Liner Lid Present?:	Y		Y	
Liquids: (Volume in Pints)				
Liquid Present?	N		N	
Internal Container with Liquid?	0		0	
Containerized Liquid	N		N	
Other Liquids:	0		0	
Internal Container with Liquid Amt:	0		0	
Liquid Between Liner and Drum:	0		0	
Containerized Liquid:	0		0	
Total Liquid Amount:	0		0	
LA Candidate?	N		N	
Prohibited Liquids Present	N		N	

Contents:	Y/N	Comments	Y/N	Comments
Sealed Containers over 4L?	N		N	
Lead Present?	N		N	
Explosives Present?	N		N	
Mercury Present?	N		N	
Wet Cell Batteries Detected?	N		N	

AMWTP

Advanced Mixed Waste Treatment Project

AMWTP

RTR Replicate Comparison Report

Date: 22-Sep-2014

Time: 08:59

RTR Batch Id: RTR13-00213 **Container Id:** 10078811 **Equipment Id:** Z-213-101

	Original Analysis		Replicate Analysis	
Prohibited Compressed Gas Present?	N		N	
PCBs Present?	N		N	
PCB Mass (lbs)	0		0	
Non-Radionuclide Pyrophoric Materials Present?	N		N	
Waste exhibiting the characteristics of ignitability, Corrosivity or reactivity Present?	N		N	
Non-Mixed Hazardous Waste Present?	N		N	
Waste Incompatibles with backfill, Seal and panel closure materials, container and packaging material, shipping container or other wastes?	N		N	
Impenetrable Dense Objects?	Y	dense areas of the waste down middle.	A	construction rubble
Result Comment:	Remaining waste appears to contain concrete, rubble.		Contents of this drum is primarily construction rubble.	

----------E-signature----------

Esig Approval ID	User ID	Signature Date	Comment
2661220	DLEE	28-NOV-13	Replicate Comparison completed.

-----End of RTR Replicate Comparison Report-----

AMWTP
Advanced Mixed Waste Treatment Project

AMWTP

RTR OIO Comparison Report

Date: 22-Sep-2014

Time: 08:59

RTR Batch Id: RTR13-00213 **Container Id:** 10078850 **Equipment Id:** Z-213-101

Container type Description: drum, 55 Gallon (17C) Gen-IDC: RF-374 Gross Weight(Lbs): 266.805

	Original Analysis		OIO Analysis	
Analysis Id / Date:	0000091722	14-SEP-2013 09:15	0000091728	14-SEP-2013 10:43
Procedure /Revision:	INST-OI-12	52	INST-OI-12	52
Recording Media Id:	IRTR13-00113		IRTR13-00113	
Starting Position:	A		A	
Is Test Pattern Resolution Ok?	Y		Y	
Audio Visual Ok?	Y		Y	
Personnel Name:	CINDY TIEGS		JOHN CUMMINGS	
IDC Ok? / Recommended IDC:	Y		Y	
IDC Change Reason:				
Summary Category / Waste matrix Code:	S5000	S5490	S5000	S5490
Packaging				
Rigid Liner Present?	Y		Y	
Liner Type Code:	TYPE 2		TYPE 2	
Liner Punctured:	Y		Y	
Liner Lid Deformed:	N		N	
Layers Of Confinement:	3		3	
Sharp Objects?	N		Y	
Sharp Objects Protected?	Y		Y	
Fill Factor(%):	66		65	
Bag Closure Method:	Twisted and Taped		Twisted and Taped	
Liner Lid Present?:	Y		Y	
Liquids: (Volume in Pints)				
Liquid Present?	N		N	
Internal Container with Liquid?	0		0	
Containerized Liquid	N		N	
Other Liquids:	0		0	
Internal Container with Liquid Amt:	0		0	
Liquid Between Liner and Drum:	0		0	
Containerized Liquid:	0		0	
Total Liquid Amount:	0		0	
LA Candidate?	N		N	
Prohibited Liquids Present	N		N	

Contents:	Y/N	Comments	Y/N	Comments
Sealed Containers over 4L?	N		N	
Lead Present?	N		N	
Explosives Present?	N		N	
Mercury Present?	N		N	
Wet Cell Batteries Detected?	N		N	

AMWTP

Advanced Mixed Waste Treatment Project

AMWTP

RTR OIO Comparison Report

Date: 22-Sep-2014

Time: 08:59

RTR Batch Id: RTR13-00213 **Container Id:** 10078850 **Equipment Id:** Z-213-101

	Original Analysis	OIO Analysis
Prohibited Compressed Gas Present?	N	N
PCBs Present?	N	N
PCB Mass (lbs)	0	0
Non-Radionuclide Pyrophoric Materials Present?	N	N
Waste exhibiting the characteristics of ignitability, Corrosivity or reactivity Present?	N	N
Non-Mixed Hazardous Waste Present?	N	N
Waste Incompatibles with backfill, Seal and panel closure materials, container and packaging material, shipping container or other wastes?	N	N
Impenetrable Dense Objects?	N	N
Result Comment:	Remaining waste appears to contain broken up floor tiles.	Contents of this drum is primarily construction rubble.

----------E-signature----------

Esig Approval ID	User ID	Signature Date	Comment

-----End of RTR OIO Comparison Report-----

AMWTP
Advanced Mixed Waste Treatment Project

AMWTP

Batch Report Coversheet

Date: 22-Sep-2014

Time: 09:08

Batch Type Real Time Radiography

Batch Report No. RTR13-00275

Batch Id RTR13-00275

Open Date 06-NOV-13 14:37:29

Close Date 08-NOV-13 14:24:17

Batch Status AP

Test Facility Idaho AMWTP

Equipment Id Z-213-106 RTR Station Right (213-106)

Container Id	IDC	Analysis Id	Date Examined	QC Type	Analysis Status	Operator
10267888	RF-750	0000093163	06-NOV-13 14:37:29	Original	P	DAVEY SUMNERS
10268516	RF-750	0000093165	06-NOV-13 16:15:50	Original	P	DAVEY SUMNERS
10267925	RF-750	0000093168	06-NOV-13 17:14:15	Original	P	DAVEY SUMNERS
10268446	RF-750	0000093171	06-NOV-13 18:02:49	Original	P	DAVEY SUMNERS
10272403	RF-750	0000093174	07-NOV-13 11:13:29	Original	P	KRISANN HUGHES
10272388	RF-750	0000093176	07-NOV-13 11:31:33	Original	P	JOHN CUMMINGS
10268047	RF-750	0000093178	07-NOV-13 11:50:10	Original	P	JOHN CUMMINGS
10268051	RF-741	0000093180	07-NOV-13 12:21:42	Original	P	JOHN CUMMINGS
10272403	RF-750	0000093184	07-NOV-13 13:15:28	Replicate / Duplicate	P	DAVEY SUMNERS
10272388	RF-750	0000093185	07-NOV-13 13:33:44	RTR OIO	P	DAVEY SUMNERS
10232790	RF-241	0000093187	07-NOV-13 14:51:03	Original	P	DENISE LEE
10145394	RF-750	0000093188	07-NOV-13 15:13:36	Original	P	DAVEY SUMNERS
10291002	BL-010	0000093191	07-NOV-13 16:42:05	Original	P	DAVEY SUMNERS
10145320	RF-750	0000093194	07-NOV-13 17:28:30	Original	P	DAVEY SUMNERS
10504976	RF-004	0000093196	07-NOV-13 17:51:20	Original	P	DAVEY SUMNERS
10090085	RF-441	0000093198	08-NOV-13 09:10:44	Original	P	CINDY TIEGS
10230734	RF-336	0000093201	08-NOV-13 10:30:16	Original	P	CINDY TIEGS
10222995	RF-241	0000093203	08-NOV-13 11:06:47	Original	P	CINDY TIEGS
10343624	RF-336	0000093206	08-NOV-13 12:12:11	Original	P	CINDY TIEGS
10140281	RF-750	0000093209	08-NOV-13 13:31:53	Original	P	DIANNA MOORE
10145949	RF-750	0000093211	08-NOV-13 13:53:21	Original	P	DIANNA MOORE
10113545	RF-750	0000093213	08-NOV-13 14:23:17	Original	P	DIANNA MOORE

**********Batch Comments**********

Written By	Date	Comment
CHINKLE	11-NOV-13 13:18:08	11-NOV-13 CHINKLE AKE Batch is promoted. chd 11/11/13
JSIMONSON	17-NOV-13 17:14:24	This batch was validated electronically only per MP-TRUW-8 8.
JSIMONSON	17-NOV-13 17:17:36	Rework: Drum 10272403, analysis 93174, Original for Replicate Comparison. Operator split the respirator cartridges 85% Aluminum-based Metals/Alloys and 15% Cellulosics, but per RPT-TRUW-05, the split should be 70%-30%. Please review and revise the Remaining Contents of Container to 70% Aluminum-based Metals/Alloys and 30% Cellulosics, as necessary.
JSIMONSON	17-NOV-13 17:17:46	Note: Information only. Drum 10232790. RTR Operator identified an impenetrable, lead lined, 30 gallon drum. Each of these conditions requires a separate NCR. RTR Operator initiated NCRs 81961 and 81962 for the lead liner and the Sealed Container Over 4 Liters. RTR ITR initiated NCR 82203 because the lead liner is impenetrable.
JSIMONSON	17-NOV-13 17:18:01	Note: Information only. Drum 10090085. Operator Identified a Drum Plastic Bag and 5 Plastic Bags for Waste. *After review of the A/V recording, it appears that the Raschig Rings* have been single bagged and placed in the fiber packs. Two layers of confinement are correct.
JSIMONSON	17-NOV-13 17:23:18	Demoted to Operations for rework.
KHUGHES	17-NOV-13 18:17:24	completed rework
JSIMONSON	17-NOV-13 18:20:07	Rework was performed completely and satisfactorily by a qualified operator.
JSIMONSON	17-NOV-13 18:20:29	Promoted to SPM.
DMARQUARDT	20-NOV-13 07:20:40	Drum 10232790. Per discussion with RTR SME, further review of this container is required in order to confirm waste form and ensure proper IDC assignment.
DMARQUARDT	20-NOV-13 07:20:40	Demote to ITR for review.
JSIMONSON	23-NOV-13 11:17:41	Rework: Drum 10232790. RTR Operator confirmed the IDC of RF-241 Americium Process Residue, but in the result comment stated "Remaining waste appears indeterminable due to lead liner in 30 gal drum." Per RTR SME, an AK evaluation should be performed on this container in order to insure the proper IDC is assigned. Please review, answer IDC Correct "No," Recommend IDC UN-00B, and enter "AK evaluation is required," or words to that effect, as the Reason for Change, as necessary.
JSIMONSON	23-NOV-13 11:24:05	Demoted to Operations for rework.
KHUGHES	23-NOV-13 12:25:26	completed rework
CHINKLE	26-NOV-13 07:12:34	11-NOV-13 CHINKLE AKE Batch is promoted. chd 11/11/13 26-NOV-13 CHINKLE AKE This batch is returned for rework. AK does not concur with the recommended IDC change for container 10232790 CHD 11/26/13
DLEE	28-NOV-13 05:40:50	Rework completed.
JSIMONSON	02-DEC-13 10:32:18	Rework was performed completely and satisfactorily by a qualified operator, and AK Evaluated IDC change request and recommended retention of IDC RF-241.
JSIMONSON	02-DEC-13 10:34:19	Promoted to SPM.
DMARQUARDT	02-DEC-13 11:54:28	Reviewed and validated. Approve.
DMARQUARDT	02-DEC-13 11:54:28	Drum 10232790. Due to the lead liner, specific waste form could not be determined. AK review of this container resulted in retention of the original IDC. This drum will be processed through special case waste to determine waste type and absence of prohibited items.

AMWTP
Advanced Mixed Waste Treatment Project

AMWTP

Batch Report Coversheet

Date: 22-Sep-2014

Time: 09:08

**********Batch E-Signature History**********

Approval ID	User ID	Signature Date	Comment
2656075	JSIMONSON	17-NOV-2013 17:23:18	Demoted to Operations for rework.
2656088	KHUGHES	17-NOV-2013 18:17:24	completed rework
2656090	JSIMONSON	17-NOV-2013 18:20:29	Promoted to SPM.
2657420	DMARQUARDT	20-NOV-2013 07:20:40	Demote to ITR for review.
2658632	JSIMONSON	23-NOV-2013 11:24:05	Demoted to Operations for rework.
2658642	KHUGHES	23-NOV-2013 12:25:26	completed rework
2661213	DLEE	28-NOV-2013 05:40:50	Rework completed.
2662033	JSIMONSON	02-DEC-2013 10:34:19	Promoted to SPM.
2662151	DMARQUARDT	02-DEC-2013 11:54:28	Reviewed and validated. Approve.

***** End of Batch Report Coversheet Report *****

AMWTP

Advanced Mixed Waste Treatment Project

AMWTP

Non-Conformance Report

Date: 22-Sep-2014

Time: 09:08

*****Batch NCR(s)*****

Batch Type RTR **Batch ID** RTR13-00275

Trackwise Number	Status	Opened Date	Closed Date

*****Container NCR(s)*****

Container ID *or related Batch ID*	Trackwise Number	Status	Opened Date	Closed Date
10268516	58758	CLOSED	14-JAN-11	03-DEC-13
10140281	81976	CLOSED	08-NOV-13	07-AUG-14
10145320	81967	CLOSED	07-NOV-13	20-MAR-14
10222995	81971	OPEN	08-NOV-13	
10222995	81972	OPEN	08-NOV-13	
10222995	81973	OPEN	08-NOV-13	
10232790	81961	OPEN	07-NOV-13	
10232790	81962	OPEN	07-NOV-13	
10232790	82203	OPEN	17-NOV-13	
10267888	81941	CLOSED	06-NOV-13	03-JUN-14
10268516	81942	CLOSED	06-NOV-13	29-MAY-14
10291002	81965	CLOSED	07-NOV-13	03-APR-14
10113545	83887	CLOSED	18-FEB-14	02-JUN-14
10504976	84702	CLOSED	18-MAR-14	08-AUG-14

*****End of Non-Conformance Report*****

AMWTP
Advanced Mixed Waste Treatment Project

AMWTP

Checklist Report

Date: 22-Sep-2014

Time: 09:08

Batch Id RTR13-00275 **Open Date** 06-NOV-13 **Close Date** 08-NOV-13

Reviewer JAY SIMONSON **Approval Level** Independent Technical Reviewer

Approval Date 17-NOV-13 **Review Iteration** 1

Question Text	Answer	Requirement	Comment
1. Is the Batch Data Report (BDR) and Quality Assurance (QA) documentation complete with the following: o Real-Time Radiography (RTR) Batch Coversheet o Table of Contents (manual review only) o RTR Analysis reports o Replicate Scan o Replicate Comparison o Independent Observation o ITR checklist (Form-1412, manual review only) o Form-1491, Batch Data Report Supplemental Comment Form (manual review only) o Associated NCRs (referenced in Waste Tracking System [WTS]) o Audio/Video Recording References?	Yes		
2. Are there 20 containers or less in the batch?	Yes		
3. Was the image quality indicator (IQI) satisfactory?	Yes		
4. Does every container in the batch reference an audio/video recording?	Yes		
5. Is there a completed radiography data analysis for each container in the batch?	Yes		
6. Was each RTR Operator qualified at the time of the radiography event?	Yes		
7. Was the data generated in a technically correct manner using the correct revision of INST-OI-12, Real-Time Radiography Operations (Drum)?	Yes		
8. Was the correct procedure and revision documented on all analysis reports?	Yes		
9. Has the E-signature History review been performed?	Yes		
10. Does the RTR operator confirm that the physical form matched the waste stream description and waste matrix code?	Yes		
11. Does the packaging weight plus the net weight equal the gross weight of the container in the estimated waste material parameters?	Yes		
12. Were all entries into the waste material items section assigned to the correct waste material parameters?	Yes		
13. Has the description of rigid liners and layers of confinement been properly documented, as applicable?	Yes		
14. Was the presence or absence of prohibited items properly documented?	Yes		
15. If prohibited items were identified, have appropriate nonconformance reports (NCRs) been generated?	Yes		See NCR report.
16. Were the containers examined between October and April in compliance with the preheat requirements?	Yes		
17. Were all proper units and significant figures used for all reported volumes/weights?	Yes		
18. Was there a valid replicate scan performed (at least one container per day, or once per testing batch, whichever is less frequent)? o Record the container number, the replicate observation date in the comment section of this checklist. o Record any issues or concerns in the batch comment section	Yes		On 07-Nov-2013 a qualified operator performed the Replicate analysis for batch RTR13-00275 on container 10272403. There were differences in the Fill Factor percentage, the Waste Items by Weight, and the Waste Items by Volume between the Original analysis and the Replicate analysis. These differences do not affect the original disposition of the container or the DQOs. Original Operator split the waste into 85% Aluminum and 15% Cellulosics in error. I agree

Batch Id RTR13-00275 **Open Date** 06-NOV-13 **Close Date** 08-NOV-13

Reviewer JAY SIMONSON **Approval Level** Independent Technical Reviewer
Approval Date 17-NOV-13 **Review Iteration** 1

Question Text	Answer	Requirement	Comment
			with the Original Operator except for the Waste parameters split, in which case I agree with the Replicate Operator. Original will be reworked to correct Waste Parameters split. No rework will be performed on the Replicate analysis.
19. Was there a valid Operator Independent Observation (OIO) (not the replicate) performed (at least one container per day, or once per testing batch, whichever is less frequent)? o Record the container number and the OIO date in the comment section of this checklist. o Record any issues or concerns in the batch comment section.	Yes		On 07-Nov-2013 a qualified operator performed the OIO analysis for batch RTR13-00275 on container 10272388. There was a difference in the Waste Items by Volume between the original analysis and the OIO analysis. This difference does not affect the original disposition of the container or the DQOs. I agree with the original operator. No rework will be performed on the OIO analysis.
20. Were any significant differences identified that would affect the original disposition of the replicate and OIO, or affect data quality objectives (DQOs)? If so, ensure an NCR was generated and WTS flagged.	No		
21. Were the RTR quality assurance objectives (QAOs) met? o Precision o Accuracy o Completeness o Comparability	Yes		
22. Were any NCRs generated for containers containing prohibited items, or any non-conforming conditions that failed to meet DQOs or QAOs? o If so, include the NCRs, as appropriate, in the BDR.	Yes		See NCR report.
23. Were the rework requirements clearly identified in WTS or on the BDR?	Yes		See batch comments

AMWTP
Advanced Mixed Waste Treatment Project

AMWTP

Checklist Report

Date: 22-Sep-2014

Time: 09:08

Batch Id RTR13-00275 **Open Date** 06-NOV-13 **Close Date** 08-NOV-13

Reviewer JAY SIMONSON **Approval Level** Independent Technical Reviewer

Approval Date 17-NOV-13 **Review Iteration** 2

Question Text	Answer	Requirement	Comment
1. Is the Batch Data Report (BDR) and Quality Assurance (QA) documentation complete with the following: o Real-Time Radiography (RTR) Batch Coversheet o Table of Contents (manual review only) o RTR Analysis reports o Replicate Scan o Replicate Comparison o Independent Observation o ITR checklist (Form-1412, manual review only) o Form-1491, Batch Data Report Supplemental Comment Form (manual review only) o Associated NCRs (referenced in Waste Tracking System [WTS]) o Audio/Video Recording References?	Yes		
2. Are there 20 containers or less in the batch?	Yes		
3. Was the image quality indicator (IQI) satisfactory?	Yes		
4. Does every container in the batch reference an audio/video recording?	Yes		
5. Is there a completed radiography data analysis for each container in the batch?	Yes		
6. Was each RTR Operator qualified at the time of the radiography event?	Yes		
7. Was the data generated in a technically correct manner using the correct revision of INST-OI-12, Real-Time Radiography Operations (Drum)?	Yes		
8. Was the correct procedure and revision documented on all analysis reports?	Yes		
9. Has the E-signature History review been performed?	Yes		
10. Does the RTR operator confirm that the physical form matched the waste stream description and waste matrix code?	Yes		
11. Does the packaging weight plus the net weight equal the gross weight of the container in the estimated waste material parameters?	Yes		
12. Were all entries into the waste material items section assigned to the correct waste material parameters?	Yes		
13. Has the description of rigid liners and layers of confinement been properly documented, as applicable?	Yes		
14. Was the presence or absence of prohibited items properly documented?	Yes		
15. If prohibited items were identified, have appropriate nonconformance reports (NCRs) been generated?	Yes		See NCR report.
16. Were the containers examined between October and April in compliance with the preheat requirements?	Yes		
17. Were all proper units and significant figures used for all reported volumes/weights?	Yes		
18. Was there a valid replicate scan performed (at least one container per day, or once per testing batch, whichever is less frequent)? o Record the container number, the replicate observation date in the comment section of this checklist. o Record any issues or concerns in the batch comment section	Yes		On 07-Nov-2013 a qualified operator performed the Replicate analysis for batch RTR13-00275 on container 10272403. There were differences in the Fill Factor percentage, the Waste Items by Weight, and the Waste Items by Volume between the Original analysis and the Replicate analysis. These differences do not affect the original disposition of the container or the DQOs. Original Operator split the waste into 85% Aluminum and 15% Cellulosics in error. I agree

Batch Id RTR13-00275 **Open Date** 06-NOV-13 **Close Date** 08-NOV-13

Reviewer JAY SIMONSON **Approval Level** Independent Technical Reviewer
Approval Date 17-NOV-13 **Review Iteration** 2

Question Text	Answer	Requirement	Comment
			with the Original Operator except for the Waste parameters split, in which case I agree with the Replicate Operator. Original will be reworked to correct Waste Parameters split. No rework will be performed on the Replicate analysis.
19. Was there a valid Operator Independent Observation (OIO) (not the replicate) performed (at least one container per day, or once per testing batch, whichever is less frequent)? o Record the container number and the OIO date in the comment section of this checklist. o Record any issues or concerns in the batch comment section.	Yes		On 07-Nov-2013 a qualified operator performed the OIO analysis for batch RTR13-00275 on container 10272388. There was a difference in the Waste Items by Volume between the original analysis and the OIO analysis. This difference does not affect the original disposition of the container or the DQOs. I agree with the original operator. No rework will be performed on the OIO analysis.
20. Were any significant differences identified that would affect the original disposition of the replicate and OIO, or affect data quality objectives (DQOs)? If so, ensure an NCR was generated and WTS flagged.	No		
21. Were the RTR quality assurance objectives (QAOs) met? o Precision o Accuracy o Completeness o Comparability	Yes		
22. Were any NCRs generated for containers containing prohibited items, or any non-conforming conditions that failed to meet DQOs or QAOs? o If so, include the NCRs, as appropriate, in the BDR.	Yes		See NCR report.
23. Were the rework requirements clearly identified in WTS or on the BDR?	Yes		See batch comments.

Batch Id RTR13-00275 **Open Date** 06-NOV-13 **Close Date** 08-NOV-13

Reviewer JAY SIMONSON **Approval Level** Independent Technical Reviewer

Approval Date 23-NOV-13 **Review Iteration** 3

Question Text	Answer	Requirement	Comment
1. Is the Batch Data Report (BDR) and Quality Assurance (QA) documentation complete with the following: o Real-Time Radiography (RTR) Batch Coversheet o Table of Contents (manual review only) o RTR Analysis reports o Replicate Scan o Replicate Comparison o Independent Observation o ITR checklist (Form-1412, manual review only) o Form-1491, Batch Data Report Supplemental Comment Form (manual review only) o Associated NCRs (referenced in Waste Tracking System [WTS]) o Audio/Video Recording References?	Yes		
2. Are there 20 containers or less in the batch?	Yes		
3. Was the image quality indicator (IQI) satisfactory?	Yes		
4. Does every container in the batch reference an audio/video recording?	Yes		
5. Is there a completed radiography data analysis for each container in the batch?	Yes		
6. Was each RTR Operator qualified at the time of the radiography event?	Yes		
7. Was the data generated in a technically correct manner using the correct revision of INST-OI-12, Real-Time Radiography Operations (Drum)?	Yes		
8. Was the correct procedure and revision documented on all analysis reports?	Yes		
9. Has the E-signature History review been performed?	Yes		
10. Does the RTR operator confirm that the physical form matched the waste stream description and waste matrix code?	Yes		
11. Does the packaging weight plus the net weight equal the gross weight of the container in the estimated waste material parameters?	Yes		
12. Were all entries into the waste material items section assigned to the correct waste material parameters?	Yes		
13. Has the description of rigid liners and layers of confinement been properly documented, as applicable?	Yes		
14. Was the presence or absence of prohibited items properly documented?	Yes		
15. If prohibited items were identified, have appropriate nonconformance reports (NCRs) been generated?	Yes		See NCR report.
16. Were the containers examined between October and April in compliance with the preheat requirements?	Yes		
17. Were all proper units and significant figures used for all reported volumes/weights?	Yes		
18. Was there a valid replicate scan performed (at least one container per day, or once per testing batch, whichever is less frequent)? o Record the container number, the replicate observation date in the comment section of this checklist. o Record any issues or concerns in the batch comment section.	Yes		On 07-Nov-2013 a qualified operator performed the Replicate analysis for batch RTR13-00275 on container 10272403. There were differences in the Fill Factor percentage, the Waste Items by Weight, and the Waste Items by Volume between the Original analysis and the Replicate analysis. These differences do not affect the original disposition of the container or the DQOs. Original Operator split the waste into 85% Aluminum and 15% Cellulosics in error. I agree

Batch Id RTR13-00275 **Open Date** 06-NOV-13 **Close Date** 08-NOV-13

Reviewer JAY SIMONSON **Approval Level** Independent Technical Reviewer

Approval Date 23-NOV-13 **Review Iteration** 3

Question Text	Answer	Requirement	Comment
			with the Original Operator except for the Waste parameters split, in which case I agree with the Replicate Operator. Original will be reworked to correct Waste Parameters split. No rework will be performed on the Replicate analysis.
19. Was there a valid Operator Independent Observation (OIO) (not the replicate) performed (at least one container per day, or once per testing batch, whichever is less frequent)? o Record the container number and the OIO date in the comment section of this checklist. o Record any issues or concerns in the batch comment section.	Yes		On 07-Nov-2013 a qualified operator performed the OIO analysis for batch RTR13-00275 on container 10272388. There was a difference in the Waste Items by Volume between the original analysis and the OIO analysis. This difference does not affect the original disposition of the container or the DQOs. I agree with the original operator. No rework will be performed on the OIO analysis.
20. Were any significant differences identified that would affect the original disposition of the replicate and OIO, or affect data quality objectives (DQOs)? If so, ensure an NCR was generated and WTS flagged.	No		
21. Were the RTR quality assurance objectives (QAOs) met? o Precision o Accuracy o Completeness o Comparability	Yes		
22. Were any NCRs generated for containers containing prohibited items, or any non-conforming conditions that failed to meet DQOs or QAOs? o If so, include the NCRs, as appropriate, in the BDR.	Yes		See NCR report.
23. Were the rework requirements clearly identified in WTS or on the BDR?	Yes		See batch comments.

Batch Id RTR13-00275 **Open Date** 06-NOV-13 **Close Date** 08-NOV-13

Reviewer JAY SIMONSON **Approval Level** Independent Technical Reviewer

Approval Date 02-DEC-13 **Review Iteration** 4

Question Text	Answer	Requirement	Comment
1. Is the Batch Data Report (BDR) and Quality Assurance (QA) documentation complete with the following: o Real-Time Radiography (RTR) Batch Coversheet o Table of Contents (manual review only) o RTR Analysis reports o Replicate Scan o Replicate Comparison o Independent Observation o ITR checklist (Form-1412, manual review only) o Form-1491, Batch Data Report Supplemental Comment Form (manual review only) o Associated NCRs (referenced in Waste Tracking System [WTS]) o Audio/Video Recording References?	Yes		
2. Are there 20 containers or less in the batch?	Yes		
3. Was the image quality indicator (IQI) satisfactory?	Yes		
4. Does every container in the batch reference an audio/video recording?	Yes		
5. Is there a completed radiography data analysis for each container in the batch?	Yes		
6. Was each RTR Operator qualified at the time of the radiography event?	Yes		
7. Was the data generated in a technically correct manner using the correct revision of INST-OI-12, Real-Time Radiography Operations (Drum)?	Yes		
8. Was the correct procedure and revision documented on all analysis reports?	Yes		
9. Has the E-signature History review been performed?	Yes		
10. Does the RTR operator confirm that the physical form matched the waste stream description and waste matrix code?	Yes		
11. Does the packaging weight plus the net weight equal the gross weight of the container in the estimated waste material parameters?	Yes		
12. Were all entries into the waste material items section assigned to the correct waste material parameters?	Yes		
13. Has the description of rigid liners and layers of confinement been properly documented, as applicable?	Yes		
14. Was the presence or absence of prohibited items properly documented?	Yes		
15. If prohibited items were identified, have appropriate nonconformance reports (NCRs) been generated?	Yes		See NCR report.
16. Were the containers examined between October and April in compliance with the preheat requirements?	Yes		
17. Were all proper units and significant figures used for all reported volumes/weights?	Yes		
18. Was there a valid replicate scan performed (at least one container per day, or once per testing batch, whichever is less frequent)? o Record the container number, the replicate observation date in the comment section of this checklist. o Record any issues or concerns in the batch comment section.	Yes		On 07-Nov-2013 a qualified operator performed the Replicate analysis for batch RTR13-00275 on container 10272403. There were differences in the Fill Factor percentage, the Waste Items by Weight, and the Waste Items by Volume between the Original analysis and the Replicate analysis. These differences do not affect the original disposition of the container or the DQOs. Original Operator split the waste into 85% Aluminum and 15% Cellulosics in error. I agree

Batch Id RTR13-00275 **Open Date** 06-NOV-13 **Close Date** 08-NOV-13

Reviewer JAY SIMONSON **Approval Level** Independent Technical Reviewer

Approval Date 02-DEC-13 **Review Iteration** 4

Question Text	Answer	Requirement	Comment
			with the Original Operator except for the Waste parameters split, in which case I agree with the Replicate Operator. Original will be reworked to correct Waste Parameters split. No rework will be performed on the Replicate analysis.
19. Was there a valid Operator Independent Observation (OIO) (not the replicate) performed (at least one container per day, or once per testing batch, whichever is less frequent)? o Record the container number and the OIO date in the comment section of this checklist. o Record any issues or concerns in the batch comment section.	Yes		On 07-Nov-2013 a qualified operator performed the OIO analysis for batch RTR13-00275 on container 10272388. There was a difference in the Waste Items by Volume between the original analysis and the OIO analysis. This difference does not affect the original disposition of the container or the DQOs. I agree with the original operator. No rework will be performed on the OIO analysis.
20. Were any significant differences identified that would affect the original disposition of the replicate and OIO, or affect data quality objectives (DQOs)? If so, ensure an NCR was generated and WTS flagged.	No		
21. Were the RTR quality assurance objectives (QAOs) met? o Precision o Accuracy o Completeness o Comparability	Yes		
22. Were any NCRs generated for containers containing prohibited items, or any non-conforming conditions that failed to meet DQOs or QAOs? o If so, include the NCRs, as appropriate, in the BDR.	Yes		See NCR report.
23. Were the rework requirements clearly identified in WTS or on the BDR?	Yes		See batch comments.

Batch Id RTR13-00275 **Open Date** 06-NOV-13 **Close Date** 08-NOV-13

Reviewer DAVE MARQUARDT **Approval Level** SPM Data Validation

Approval Date 20-NOV-13 **Review Iteration** 1

Question Text	Answer	Requirement	Comment
(1) Has the batch received a Data Generation Level Independent Technical Review?	Yes	MP-TRUW-8.2, C3-10b(1)	
(2) Is the Independent Technical Review checklist complete?	Yes	MP-TRUW-8.2, C3-10b(1)	
(3) When identified, were polychlorinated biphenyls (PCBs), mercury, lead, or other hazardous contaminants consistent with the waste stream acceptable knowledge (AK) Summary Report(s) and/or AK documentation?	Yes	MP-TRUW-8.2, C4-3	
(4) Are any ignitable, corrosive, or reactive wastes identified in this waste?	No	MP-TRUW-8.2, C4-3	
(5) Are the packaging configurations identified on the real-time radiography (RTR) consistent with the waste stream AK Summary Report(s) and/or AK documentation?	Yes	MP-TRUW-8.2, C4-3	
(6) Do the containers in this batch contain typical waste items consistent with waste stream AK Summary Report(s) and/or AK documentation?	Yes	MP-TRUW-8.2, C4-3	
(7) Are the Waste Matrix Codes (WMCs) and physical form descriptions consistent with AK?	Yes	MP-TRUW-8.2, C4-3	
(8) Have all AK discrepancies been resolved and have all AK Resolution checklists been approved? Reference all waste stream AK documentation used in review of this data package.	N/A	MP-TRUW-8.2, C4-3	No discrepancies. RPT-TRUW-05, RPT-TRUW-06, RPT-TRUW-12, RPT-TRUW-56.
(9) Have all applicable Quality Assurance Objectives (QAOs) been met, including precision, accuracy, completeness, and comparability, by using the appropriate acceptance criteria for each as specified in MP-TRUW-8.2, Quality Assurance Project Plan Section C3-4? Precision ¿ Verified prior to use by tuning precisely enough to demonstrate compliance with QAOs through viewing an image test pattern, as evidenced by a satisfactory Image Quality Indicator (IQI). ¿ Have discrepancies, if any, between radiography operators been reconciled? Accuracy ¿ Use of a target to tune the image for maximum sharpness as evidenced by a satisfactory IQI and by requiring operators to successfully identify 100% of the required items in a training container during initial and subsequent qualifications. Completeness ¿ An audio/videotape (or equivalent media) of the radiography examination and a validated radiography data form will be obtained for 100% of the retrievably stored waste container in the program for all waste containers subject to radiography. Comparability ¿ Use of standardized radiography procedures and operator qualifications.	Yes	MP-TRUW-8.2, C3-4a	
(10) Do the waste container contents match the WMC, waste stream description and identify the absence of prohibited items?	Yes	MP-TRUW-8.2, C1-3 and B3-11	See SPM batch comments regarding drum 10232790.
(11) If residual liquids exist in the container, is an estimate of quantity given?	Yes	MP-TRUW-8.2, C1-3	
(12) Do the individual container reports contain the (a) IDC, (b) Waste Matrix Code, (c) audio/video recording reference, (d) gross container weight, (e) waste material parameter weights, and (f) signature and date of examination?	Yes	MP-TRUW-8.2, C1-3 and C3-11a	
(13) Have the IDC, WMC, and/or waste stream for all	Yes	MP-TRUW-8.2, C1-3 and	

Batch Id RTR13-00275 **Open Date** 06-NOV-13 **Close Date** 08-NOV-13

Reviewer DAVE MARQUARDT **Approval Level** SPM Data Validation

Approval Date 20-NOV-13 **Review Iteration** 1

Question Text	Answer	Requirement	Comment
containers in the batch remained the same as originally assigned by the historical designation? If not, note the container number in the comment field and notify the Acceptable Knowledge Expert (AKE) if NCR does not exist on the WMC and IDC change.		C3-4a	
(14) Was a replicate scan performed by an independent operator on at least one container per day or once per testing batch, whichever is less frequent, by a qualified radiography operator that was not involved in the original scan of the waste container?	Yes	MP-TRUW-8.2, B1-3, C3-4a, and C3-10b(1)	
(15) Has an independent observation of one scan (not the replicate) been performed by a qualified operator that was not involved in the original scan of the waste container, at a rate of once per day or once per batch, whichever is less frequent? Record date of observation and any issues or concerns in the comment section.	Yes	MP-TRUW-8.2, C1-3 and C3-4a	On 07-Nov-2013 a qualified operator performed the OIO analysis for batch RTR13-00275 on container 10272388. No issues.
(16) Did personnel having current qualifications perform all RTR examinations?	Yes	MP-TRUW-8.1, Appendix F	
(17) Verify the correct procedure and revision number were used for all containers in this batch.	Yes	MP-TRUW-8.2, C3-4a	
(18) Verify the audio and video checks were performed and are satisfactory.	Yes	MP-TRUW-8.2, C3-4a	
(19) Verify that there are 20 or fewer containers in the batch.	Yes	MP-TRUW-8.2, C1-3	
(20) Does the data for all containers within this batch meet the review, validation, and verification requirements? · Are proper units (e.g. Liters or pounds) and significant figure used? · Is the BDR complete (all pages identified in the BDR and numbered accordingly)? - RTR Batch Coversheet - Table of Contents (manual review only) - RTR Analysis reports - Replicate Scan - Replicate Comparison - Independent Observation - Form-1412, ITR checklist - Associated NCRs - Form, 1491, Batch Data Report Supplemental Comment Form, as applicable - Audio/Video Recording References	Yes	MP-TRUW-8.2, C3 10b(2)	
(21) Review all NCR(s) (open and closed). Can the batch be approved?	Yes	MP-TRUW-8.2, C3-13	
(22) Is all data associated with this BDR acceptable for signature release?	No	MP-TRUW-8.2, C3 10b(2)	See SPM batch comments.

Batch Id RTR13-00275 **Open Date** 06-NOV-13 **Close Date** 08-NOV-13

Reviewer DAVE MARQUARDT **Approval Level** SPM Data Validation

Approval Date 02-DEC-13 **Review Iteration** 2

Question Text	Answer	Requirement	Comment
(1) Has the batch received a Data Generation Level Independent Technical Review?	Yes	MP-TRUW-8.2, C3-10b(1)	
(2) Is the Independent Technical Review checklist complete?	Yes	MP-TRUW-8.2, C3-10b(1)	
(3) When identified, were polychlorinated biphenyls (PCBs), mercury, lead, or other hazardous contaminants consistent with the waste stream acceptable knowledge (AK) *Summary Report(s) and/or AK documentation*?	Yes	MP-TRUW-8.2, C4-3	
(4) Are any ignitable, corrosive, or reactive wastes identified in this waste?	No	MP-TRUW-8.2, C4-3	
(5) Are the packaging configurations identified on the real-time radiography (RTR) consistent with the waste stream AK Summary Report(s) and/or AK documentation?	Yes	MP-TRUW-8.2, C4-3	
(6) Do the containers in this batch contain typical waste items consistent with waste stream AK Summary Report(s) and/or AK documentation?	Yes	MP-TRUW-8.2, C4-3	Drum 10232790. Due to the lead liner, specific waste form could not be determined. AK review of this container resulted in retention of the original IDC. This drum will be processed through special case waste to determine waste type and absence of prohibited items.
(7) Are the Waste Matrix Codes (WMCs) and physical form descriptions consistent with AK?	Yes	MP-TRUW-8.2, C4-3	Drum 10232790. Due to the lead liner, specific waste form could not be determined. AK review of this container resulted in retention of the original IDC. This drum will be processed through special case waste to determine waste type and absence of prohibited items.
(8) Have all AK discrepancies been resolved and have all AK Resolution checklists been approved? Reference all waste stream AK documentation used in review of this data package.	N/A	MP-TRUW-8.2, C4-3	No discrepancies. RPT-TRUW-05, RPT-TRUW-06, RPT-TRUW-12, RPT-TRUW-56. Drum 10232790. Due to the lead liner, specific waste form could not be determined. AK review of this container resulted in retention of the original IDC. This drum will be processed through special case waste to determine waste type and absence of prohibited items.
(9) Have all applicable Quality Assurance Objectives (QAOs) been met, including precision, accuracy, completeness, and comparability, by using the appropriate acceptance criteria for each as specified in MP-TRUW-8.2, Quality Assurance Project Plan Section C3-4? Precision ¿ Verified prior to use by tuning precisely enough to demonstrate compliance with QAOs through viewing an image test pattern, as evidenced by a satisfactory Image Quality Indicator (IQI) ¿ Have discrepancies, if any, between radiography operators been reconciled? Accuracy ¿ Use of a target to tune the image for maximum sharpness as evidenced by a satisfactory IQI and by requiring operators to successfully identify 100% of the required items in a training container during initial and subsequent qualifications. Completeness ¿ An audio/videotape (or equivalent media) of the radiography examination and a validated radiography data form will be obtained for 100% of the retrievably stored waste container in the program for all waste containers subject to radiography. Comparability ¿ Use of standardized radiography procedures and	Yes	MP-TRUW-8.2, C3-4a	

Batch Id RTR13-00275 **Open Date** 06-NOV-13 **Close Date** 08-NOV-13

Reviewer DAVE MARQUARDT **Approval Level** SPM Data Validation

Approval Date 02-DEC-13 **Review Iteration** 2

Question Text	Answer	Requirement	Comment
operator qualifications.			
(10) Do the waste container contents match the WMC, waste stream description and identify the absence of prohibited items?	Yes	MP-TRUW-8.2, C1-3 and B3-11	Drum 10232790. Due to the lead liner, specific waste form could not be determined. AK review of this container resulted in retention of the original IDC. This drum will be processed through special case waste to determine waste type and absence of prohibited items.
(11) If residual liquids exist in the container, is an estimate of quantity given?	Yes	MP-TRUW-8.2, C1-3	
(12) Do the individual container reports contain the (a) IDC, (b) Waste Matrix Code, (c) audio/video recording reference, (d) gross container weight, (e) waste material parameter weights, and (f) signature and date of examination?	Yes	MP-TRUW-8.2, C1-3 and C3-11a	
(13) Have the IDC, WMC, and/or waste stream for all containers in the batch remained the same as originally assigned by the historical designation? If not, note the container number in the comment field and notify the Acceptable Knowledge Expert (AKE) if NCR does not exist on the WMC and IDC change.	Yes	MP-TRUW-8.2, C1-3 and C3-4a	
(14) Was a replicate scan performed by an independent operator on at least one container per day or once per testing batch, whichever is less frequent, by a qualified radiography operator that was not involved in the original scan of the waste container?	Yes	MP-TRUW-8.2, B1-3, C3-4a, and C3-10b(1)	
(15) Has an independent observation of one scan (not the replicate) been performed by a qualified operator that was not involved in the original scan of the waste container, at a rate of once per day or once per batch, whichever is less frequent? Record date of observation and any issues or concerns in the comment section.	Yes	MP-TRUW-8.2, C1-3 and C3-4a	On 07-Nov-2013 a qualified operator performed the OIO analysis for batch RTR13-00275 on container 10272388. No issues.
(16) Did personnel having current qualifications perform all RTR examinations?	Yes	MP-TRUW-8.1, Appendix F	
(17) Verify the correct procedure and revision number were used for all containers in this batch.	Yes	MP-TRUW-8.2, C3-4a	
(18) Verify the audio and video checks were performed and are satisfactory.	Yes	MP-TRUW-8.2, C3-4a	
(19) Verify that there are 20 or fewer containers in the batch.	Yes	MP-TRUW-8.2, C1-3	
(20) Does the data for all containers within this batch meet the review, validation, and verification requirements? Are proper units (e.g. Liters or pounds) and significant figure used? Is the BDR complete (all pages identified in the BDR and numbered accordingly)? - RTR Batch Coversheet - Table of Contents (manual review only) - RTR Analysis reports - Replicate Scan - Replicate Comparison - Independent Observation - Form-1412, ITR checklist - Associated NCRs - Form, 1491, Batch Data Report Supplemental Comment Form, as applicable - Audio/Video Recording References	Yes	MP-TRUW-8.2, C3 10b(2)	
(21) Review all NCR(s) (open and closed). Can the batch be approved?	Yes	MP-TRUW-8.2, C3-13	
(22) Is all data associated with this BDR acceptable for signature release?	Yes	MP-TRUW-8.2, C3 10b(2)	

Batch Id RTR13-00275 **Open Date** 06-NOV-13 **Close Date** 08-NOV-13

Esignature History

Esig Approval ID	User ID	Esig Date	Approval Level	Comments
2662151	DMARQUARDT	02-DEC-13	SPM	Reviewed and validated. Approve.
2662033	JSIMONSON	02-DEC-13	ITR	Promoted to SPM.
2658632	JSIMONSON	23-NOV-13	ITR	Demoted to Operations for rework.
2657420	DMARQUARDT	20-NOV-13	SPM	Demote to ITR for review.
2656090	JSIMONSON	17-NOV-13	ITR	Promoted to SPM.
2656075	JSIMONSON	17-NOV-13	ITR	Demoted to Operations for rework.

AMWTP
Advanced Mixed Waste Treatment Project

AMWTP

RTR Analysis Report

Date: 22-Sep-2014
Time: 09:09

Batch Id RTR13-00275 **Container Id** 10267888 **Analysis Id** 0000093163
Container Type C drum, 83 Gallon **Analysis Status** Pass

RTR Date 06-NOV-2013 14:37 **Gross Weight** 251.370 **Lbs.** **Net Weight** 107.370 **Lbs**
Equipment Z-213-106 **Waste Matrix Code** S5490 **IDC** RF-750 Pits 11 & 12 Debris
Recording Id 2RTR13-00166 **Procedure Id** INST-OI-12 **Revision** 52 **Approval Level** SPM
Is Test Pattern Resolution Ok? Yes **Start Side** A **Replicate** No **OIO** No
Audio Visual Ok? Yes **Operator** DSUMNERS

Result Comment Remaining waste appears to be primarily cellulosics, rags and PPE.
AK concurs with the recommended IDC, RF-750, for container 10267888. No AKR or NCR is necessary. CHD 11/11/13

Package

IDC Correct Yes **Recommended IDC** **Summary Category** S5000
Idc Change Reason
Rigid Liner Present? No **LinerType** NO LINER
Liner Punctured? N/A **Sharp Objects?** No
Liner Lid Present? No **Sharp Objects Are Protected?** Yes
Liner Lid Deformed? N/A **Layers Of Confinement** 2
Fill Factor 80
Bag Closure Method Twisted and Taped

Liquids

Liquid Present? No
Internal Container with Liquid 0 pints
Liquid Between Liner & Drum 0 pints
Total Liquid Amount 0 pints
Other Liquids 0 pints
Prohibited Liquids Present No
Internal Container with Liquid No
LA Candidate No
Containerized Liquid
Containerized Liquid Amt 0 pints
Comment
Comment

Contents-Drum or Box

	Value	Comment		Value	Comment
Lead?	Yes, Rejected	Lead sheet pieces, impenetrable	**Mercury Present?**	No	
Wet Cell Batteries?	No		**Explosives?**	No	
Prohibited Compressed Gases?	No		**PCBs Present?**	No	
Aerosol Cans?	No		**PCB Mass (lbs)**	0	
Non-Mixed Hazardous Waste Present?	No		**Sealed Containers Over 4L?**	No	

Non-Radionuclide Pyrophoric Materials Present? No
Waste exhibiting the characteristics of Ignitability, Corrosivity or Reactivity Present? No
Wastes Incompatible with backfill, seal and panel closure materials, container and packaging materials,shipping container or other wastes? No
Impenetrable Dense Objects? Yes - Unacceptable lead sheeting pieces, (2)

Waste Material Items

Packaging Materials

Material Item	Quantity	Unit	Unit Wt(lbs)	Item Wt(lbs)
Drum plastic bag	2.000	EACH	1.000	2.000
55-GAL DRUM (17c)	1.000	EACH	59.000	59.000

Waste Items byWeight

Material Item	Quantity	Unit	Unit Wt(lbs)	Item Wt(lbs)
lead sheets	2.000	EACH	15.000	30.000
misc plastics, sheeting, bottle	1.000	EACH	10.000	10.000
misc metals, probe shields	1.000	EACH	5.000	5.000
Cardboard liner	1.000	EACH	4.000	4.000
D-cell Battery	2.000	EACH	0.250	0.500

AMWTP
Advanced Mixed Waste Treatment Project

AMWTP

RTR Analysis Report

Date: 22-Sep-2014

Time: 09:09

Batch Id RTR13-00275 **Container Id** 10267888 **Analysis Id** 0000093163

Waste Items by Volume

Material Item	Quantity	Unit	Unit Wt(lbs)	Item Wt(lbs)
Oil-Dri (Inside 55 gal drum)	70.000	PINTS	0.420	29.400

Waste Parameters

Waste Parameter	Remaining Weight %	Actual Weight Lbs
Iron-based Metals/Alloys	0.000	5.000
Aluminum-based Metals/Alloys	0.000	0.000
Other metals	0.000	30.500
Other Inorganic Materials	0.000	29.400
Cellulosics	100.000	32.470
Rubber	0.000	0.000
Plastic (Waste Materials)	0.000	10.000
Inorganic matrix	0.000	0.000
Organic matrix	0.000	0.000
Soils/gravel	0.000	0.000
Steel (packaging materials)	0.000	142.000
Plastic (packaging materials)	0.000	2.000
Cellulosics Packaging	0.000	0.000

Analysis Esignature History

Esig Approval Id	User Id	Esignature Date	Comment
2652478	CHINKLE	11-NOV-2013 13:18	Batch is promoted chd 11/11/13
2650201	DSUMNERS	06-NOV-2013 14:37	

AMWTP

Advanced Mixed Waste Treatment Project

AMWTP

RTR Analysis Report

Date: 22-Sep-2014

Time: 09:09

Batch Id RTR13-00275 **Container Id** 10268516 **Analysis Id** 0000093165

Container Type C drum, 83 Gallon **Analysis Status** Pass

RTR Date 06-NOV-2013 16:15 **Gross Weight** 262.395 Lbs. **Net Weight** 119.395 Lbs

Equipment Z-213-106 **Waste Matrix Code** S5490 **IDC** RF-750 Pits 11 & 12 Debris

Recording Id 2RTR13-00166 **Procedure Id** INST-OI-12 **Revision** 52 **Approval Level** SPM

Is Test Pattern Resolution Ok? Yes **Start Side** A **Replicate** No **OIO** No

Audio Visual Ok? Yes **Operator** DSUMNERS

Result Comment Remaining waste appears to be primarily cellulosics, rags and PPE.
AK concurs with the recommended IDC, RF-750, for container 10268516. No AKR or NCR is necessary. CHD 11/11/13

Package

IDC Correct Yes **Recommended IDC** **Summary Category** S5000

Idc Change Reason

Rigid Liner Present? No **LinerType** NO LINER

Liner Punctured? N/A **Sharp Objects?** No

Liner Lid Present? No **Sharp Objects Are Protected?** Yes

Liner Lid Deformed? N/A **Layers Of Confinement** 1

Fill Factor 90

Bag Closure Method Twisted and Taped

Liquids

Liquid Present? Yes

Internal Container with Liquid 09 pints

Liquid Between Liner & Drum 0 pints

Total Liquid Amount .09 pints

Other Liquids 0 pints

Prohibited Liquids Present No

Internal Container with Liquid Yes

LA Candidate No

Containerized Liquid

Containerized Liquid Amt 0 pints

Comment 3 tablespoons of liquid in aerosol can.

Comment

Contents-Drum or Box

	Value	Comment		Value	Comment
Lead?	No		**Mercury Present?**	No	
Wet Cell Batteries?	No		**Explosives?**	No	
Prohibited Compressed Gases?	Yes	unvented aerosol can	**PCBs Present?**	No	
Aerosol Cans?	Yes	unvented aerosol can	**PCB Mass (lbs)**	0	
Non-Mixed Hazardous Waste Present?	No		**Sealed Containers Over 4L?**	No	

Non-Radionuclide Pyrophoric Materials Present? No

Waste exhibiting the characteristics of Ignitability, Corrosivity or Reactivity Present? No

Wastes Incompatible with backfill, seal and panel closure materials, container and packaging materials,shipping container or other wastes? No

Impenetrable Dense Objects? No

Waste Material Items

Packaging Materials

Material Item	Quantity	Unit	Unit Wt(lbs)	Item Wt(lbs)
Drum plastic bag	1.000	EACH	1.000	1.000
55-GAL DRUM (17c)	1.000	EACH	59.000	59.000

Waste Items byWeight

Material Item	Quantity	Unit	Unit Wt(lbs)	Item Wt(lbs)
plastic sheeting	1.000	EACH	10.000	10.000
misc metals, probe shields	1.000	EACH	10.000	10.000
safety shoes	6.000	EACH	1.500	9.000
Aerosol Can	1.000	EACH	0.240	0.240
D-cell Battery	6.000	EACH	0.250	1.500

AMWTP
Advanced Mixed Waste Treatment Project

AMWTP

RTR Analysis Report

Date: 22-Sep-2014

Time: 09:09

Batch Id RTR13-00275 **Container Id** 10268516 **Analysis Id** 0000093165

Waste Items by Volume

Material Item	Quantity	Unit	Unit Wt(lbs)	Item Wt(lbs)
Oil-Dri (Inside 55 gal drum)	70.000	PINTS	0.420	29.400
Liquids for Other Inorganics	0.090	PINTS	1.000	0.090

Waste Parameters

Waste Parameter	Remaining Weight %	Actual Weight Lbs
Iron-based Metals/Alloys	0.000	11.140
Aluminum-based Metals/Alloys	0.000	0.000
Other metals	0.000	1.500
Other Inorganic Materials	0.000	29.490
Cellulosics	100.000	67.265
Rubber	0.000	0.000
Plastic (Waste Materials)	0.000	10.000
Inorganic matrix	0.000	0.000
Organic matrix	0.000	0.000
Soils/gravel	0.000	0.000
Steel (packaging materials)	0.000	142.000
Plastic (packaging materials)	0.000	1.000
Cellulosics Packaging	0.000	0.000

Analysis Esignature History

Esig Approval Id	User Id	Esignature Date	Comment
2652473	CHINKLE	11-NOV-2013 13:18	Batch is promoted. chd 11/11/13
2650277	DSUMNERS	06-NOV-2013 16:15	

AMWTP
Advanced Mixed Waste Treatment Project

AMWTP
RTR Analysis Report

Date: 22-Sep-2014
Time: 09:09

Batch Id RTR13-00275 **Container Id** 10267925 **Analysis Id** 0000093168
Container Type C drum, 83 Gallon **Analysis Status** Pass

RTR Date 06-NOV-2013 17:14 **Gross Weight** 231.525 **Lbs.** **Net Weight** 87.525 **Lbs**
Equipment Z-213-106 **Waste Matrix Code** S5490 **IDC** RF-750 Pits 11 & 12 Debris
Recording Id 2RTR13-00166 **Procedure Id** INST-OI-12 **Revision** 52 **Approval Level** SPM
Is Test Pattern Resolution Ok? Yes **Start Side** A **Replicate** No **OIO** No
Audio Visual Ok? Yes **Operator** DSUMNERS

Result Comment Remaining waste appears to be primarily cellulosis, rags, PPE and cardboard.
AK concurs with the recommended IDC, RF-750, for container 10267925_. No AKR or NCR is necessary. CHD 11/11/13

Package

IDC Correct Yes **Recommended IDC** **Summary Category** S5000
Idc Change Reason
Rigid Liner Present? No **LinerType** NO LINER
Liner Punctured? N/A **Sharp Objects?** No
Liner Lid Present? No **Sharp Objects Are Protected?** Yes
Liner Lid Deformed? N/A **Layers Of Confinement** 2
Fill Factor 85
Bag Closure Method Twisted and Taped

Liquids

Liquid Present? No **Internal Container with Liquid** No
Internal Container with Liquid 0 pints **LA Candidate** No
Liquid Between Liner & Drum 0 pints **Containerized Liquid**
Containerized Liquid Amt 0 pints
Total Liquid Amount 0 pints
Other Liquids 0 pints **Comment**
Prohibited Liquids Present No **Comment**

Contents-Drum or Box

	Value	Comment		Value	Comment
Lead?	No		Mercury Present?	No	
Wet Cell Batteries?	No		Explosives?	No	
Prohibited Compressed Gases?	No		PCBs Present?	No	
Aerosol Cans?	No		PCB Mass (lbs)	0	
Non-Mixed Hazardous Waste Present?	No		Sealed Containers Over 4L?	No	

Non-Radionuclide Pyrophoric Materials Present? No
Waste exhibiting the characteristics of Ignitability, Corrosivity or Reactivity Present? No
Wastes Incompatible with backfill, seal and panel closure materials, container and packaging materials,shipping container or other wastes? No
Impenetrable Dense Objects? No

Waste Material Items

Packaging Materials

Material Item	Quantity	Unit	Unit Wt(lbs)	Item Wt(lbs)
Drum plastic bag	2.000	EACH	1.000	2.000
55-GAL DRUM (17c)	1.000	EACH	59.000	59.000

Waste Items byWeight

Material Item	Quantity	Unit	Unit Wt(lbs)	Item Wt(lbs)
misc metals, fasteners	1.000	EACH	1.000	1.000
plastic sheeting and bagging	1.000	EACH	10.000	10.000

Waste Items by Volume

Material Item	Quantity	Unit	Unit Wt(lbs)	Item Wt(lbs)
Oil-Dri (Inside 55 gal drum)	90.000	PINTS	0.420	37.800

Batch Id RTR13-00275 **Container Id** 10267925 **Analysis Id** 0000093168

Waste Parameters

Waste Parameter	Remaining Weight %	Actual Weight Lbs
Iron-based Metals/Alloys	0.000	1.000
Aluminum-based Metals/Alloys	0.000	0.000
Other metals	0.000	0.000
Other Inorganic Materials	0.000	37.800
Cellulosics	100.000	38.725
Rubber	0.000	0.000
Plastic (Waste Materials)	0.000	10.000
Inorganic matrix	0.000	0.000
Organic matrix	0.000	0.000
Soils/gravel	0.000	0.000
Steel (packaging materials)	0.000	142.000
Plastic (packaging materials)	0.000	2.000
Cellulosics Packaging	0.000	0.000

Analysis Esignature History

Esig Approval Id	User Id	Esignature Date	Comment
2652477	CHINKLE	11-NOV-2013 13:18	Batch is promoted. chd 11/11/13
2650391	DSUMNERS	06-NOV-2013 17:14	

AMWTP
Advanced Mixed Waste Treatment Project

AMWTP
RTR Analysis Report

Date: 22-Sep-2014
Time: 09:09

Batch Id RTR13-00275 **Container Id** 10268446 **Analysis Id** 0000093171
Container Type C drum, 83 Gallon **Analysis Status** Pass

RTR Date 06-NOV-2013 18:02 **Gross Weight** 238.140 Lbs. **Net Weight** 95.140 Lbs
Equipment Z-213-106 **Waste Matrix Code** S5490 **IDC** RF-750 Pits 11 & 12 Debris
Recording Id 2RTR13-00166 **Procedure Id** INST-OI-12 **Revision** 52 **Approval Level** SPM
Is Test Pattern Resolution Ok? Yes **Start Side** A **Replicate** No **OIO** No
Audio Visual Ok? Yes **Operator** DSUMNERS

Result Comment Remaining waste appears to be primarily plastic waste materials, sheeting,bagging,tubing and plastic bottles.
AK concurs with the recommended IDC, RF-750, for container 10268446. No AKR or NCR is necessary. CHD 11/11/13

Package

IDC Correct Yes **Recommended IDC** **Summary Category** S5000
Idc Change Reason
Rigid Liner Present? No **LinerType** NO LINER
Liner Punctured? N/A **Sharp Objects?** No
Liner Lid Present? No **Sharp Objects Are Protected?** Yes
Liner Lid Deformed? N/A **Layers Of Confinement** 1
Fill Factor 70
Bag Closure Method Twisted and Taped

Liquids

Liquid Present? Yes **Internal Container with Liquid** Yes
Internal Container with Liquid .06 pints **LA Candidate** No
Liquid Between Liner & Drum 0 pints **Containerized Liquid**
Total Liquid Amount .06 pints **Containerized Liquid Amt** 0 pints
Other Liquids 0 pints **Comment** Approx 2 tablespoons of liquid in plastic squeeze bottle.
Prohibited Liquids Present No **Comment**

Contents-Drum or Box

	Value	Comment		Value	Comment
Lead?	No		**Mercury Present?**	No	
Wet Cell Batteries?	No		**Explosives?**	No	
Prohibited Compressed Gases?	No		**PCBs Present?**	No	
Aerosol Cans?	No		**PCB Mass (lbs)**	0	
Non-Mixed Hazardous Waste Present?	No		**Sealed Containers Over 4L?**	No	

Non-Radionuclide Pyrophoric Materials Present? No
Waste exhibiting the characteristics of Ignitability, Corrosivity or Reactivity Present? No
Wastes Incompatible with backfill, seal and panel closure materials, container and packaging materials,shipping container or other wastes? No
Impenetrable Dense Objects? No

Waste Material Items

Packaging Materials

Material Item	Quantity	Unit	Unit Wt(lbs)	Item Wt(lbs)
Drum plastic bag	1.000	EACH	1.000	1.000
55-GAL DRUM (17c)	1.000	EACH	59.000	59.000

Waste Items byWeight

Material Item	Quantity	Unit	Unit Wt(lbs)	Item Wt(lbs)
Wire, fasteners, flashlights, probe shields	1.000	EACH	10.000	10.000
1 Gal. Paint Can w/ Lid	1.000	EACH	0.840	0.840
D-cell Battery	2.000	EACH	0.250	0.500

Waste Items by Volume

Material Item	Quantity	Unit	Unit Wt(lbs)	Item Wt(lbs)
Oil-Dri (Inside 55 gal drum)	90.000	PINTS	0.420	37.800
Liquids for Other Inorganics	0.060	PINTS	1.000	0.060

Batch Id RTR13-00275 **Container Id** 10268446 **Analysis Id** 0000093171

Waste Parameters

Waste Parameter	Remaining Weight %	Actual Weight Lbs
Iron-based Metals/Alloys	0.000	10.840
Aluminum-based Metals/Alloys	0.000	0.000
Other metals	0.000	0.500
Other Inorganic Materials	0.000	37.860
Cellulosics	0.000	0.000
Rubber	0.000	0.000
Plastic (Waste Materials)	100.000	45.940
Inorganic matrix	0.000	0.000
Organic matrix	0.000	0.000
Soils/gravel	0.000	0.000
Steel (packaging materials)	0.000	142.000
Plastic (packaging materials)	0.000	1.000
Cellulosics Packaging	0.000	0.000

Analysis Esignature History

Esig Approval Id	User Id	Esignature Date	Comment
2652474	CHINKLE	11-NOV-2013 13:18	Batch is promoted. chd 11/11/13
2650403	DSUMNERS	06-NOV-2013 18:02	

AMWTP
Advanced Mixed Waste Treatment Project

AMWTP
RTR Analysis Report

Date: 22-Sep-2014
Time: 09:09

Batch Id RTR13-00275 **Container Id** 10272403 **Analysis Id** 0000093174
Container Type C drum, 83 Gallon **Analysis Status** Pass

RTR Date 07-NOV-2013 11:13 **Gross Weight** 317.520 **Lbs.** **Net Weight** 173.520 **Lbs**
Equipment Z-213-106 **Waste Matrix Code** S5490 **IDC** RF-750 Pits 11 & 12 Debris
Recording Id 2RTR13-00166 **Procedure Id** INST-OI-12 **Revision** 52 **Approval Level** SPM
Is Test Pattern Resolution Ok? Yes **Start Side** A **Replicate** No **OIO** No
Audio Visual Ok? Yes **Operator** JCUMMINGS

Result Comment Contents of this drum is primarily respirator cartridges.
AK concurs with the recommended IDC, RF-750, for container 10272403. No AKR or NCR is necessary. CHD 11/11/13
(rework) Updated Remaining Contents of Container. K.H. 11-17-13

Package

IDC Correct Yes **Recommended IDC** **Summary Category** S5000
Idc Change Reason
Rigid Liner Present? No **LinerType** NO LINER
Liner Punctured? N/A **Sharp Objects?** No
Liner Lid Present? No **Sharp Objects Are Protected?** Yes
Liner Lid Deformed? N/A **Layers Of Confinement** 3
Fill Factor 98
Bag Closure Method Twisted and Taped

Liquids

Liquid Present? No
Internal Container with Liquid 0 pints
Liquid Between Liner & Drum 0 pints
Total Liquid Amount 0 pints
Other Liquids 0 pints
Prohibited Liquids Present No
Internal Container with Liquid No
LA Candidate No
Containerized Liquid
Containerized Liquid Amt 0 pints
Comment
Comment

Contents-Drum or Box

	Value	Comment		Value	Comment
Lead?	No		Mercury Present?	No	
Wet Cell Batteries?	No		Explosives?	No	
Prohibited Compressed Gases?	No		PCBs Present?	No	
Aerosol Cans?	No		PCB Mass (lbs)	0	
Non-Mixed Hazardous Waste Present?	No		Sealed Containers Over 4L?	No	

Non-Radionuclide Pyrophoric Materials Present? No
Waste exhibiting the characteristics of Ignitability, Corrosivity or Reactivity Present? No
Wastes Incompatible with backfill, seal and panel closure materials, container and packaging materials,shipping container or other wastes? No
Impenetrable Dense Objects? No

Waste Material Items

Packaging Materials

Material Item	Quantity	Unit	Unit Wt(lbs)	Item Wt(lbs)
Drum plastic bag	2.000	EACH	1.000	2.000
55-GAL DRUM (17c)	1.000	EACH	59.000	59.000

Waste Items byWeight

Material Item	Quantity	Unit	Unit Wt(lbs)	Item Wt(lbs)
plastic bagging	1.000	EACH	4.000	4.000
1/2 face respirator	1.000	EACH	1.000	1.000
Plastic bag for waste	1.000	EACH	0.250	0.250

Waste Items by Volume

Material Item	Quantity	Unit	Unit Wt(lbs)	Item Wt(lbs)
Oil-Dri (Inside 55 gal drum)	45.000	PINTS	0.420	18.900

Batch Id RTR13-00275 **Container Id** 10272403 **Analysis Id** 0000093174

Waste Parameters

Waste Parameter	Remaining Weight %	Actual Weight Lbs
Iron-based Metals/Alloys	0.000	0.000
Aluminum-based Metals/Alloys	70.000	104.559
Other metals	0.000	0.000
Other Inorganic Materials	0.000	18.900
Cellulosics	30.000	44.811
Rubber	0.000	1.000
Plastic (Waste Materials)	0.000	4.250
Inorganic matrix	0.000	0.000
Organic matrix	0.000	0.000
Soils/gravel	0.000	0.000
Steel (packaging materials)	0.000	142.000
Plastic (packaging materials)	0.000	2.000
Cellulosics Packaging	0.000	0.000

Analysis Esignature History

Esig Approval Id	User Id	Esignature Date	Comment
2656086	KHUGHES	17-NOV-2013 18:16	
2652471	CHINKLE	11-NOV-2013 13:18	Batch is promoted. chd 11/11/13
2650647	JCUMMINGS	07-NOV-2013 11:13	

AMWTP
Advanced Mixed Waste Treatment Project

AMWTP
RTR Analysis Report

Date: 22-Sep-2014
Time: 09:09

Batch Id RTR13-00275 **Container Id** 10272388 **Analysis Id** 0000093176
Container Type C drum, 83 Gallon **Analysis Status** Pass

RTR Date 07-NOV-2013 11:31 **Gross Weight** 288.855 Lbs. **Net Weight** 144.855 Lbs
Equipment Z-213-106 **Waste Matrix Code** S5490 **IDC** RF-750 Pits 11 & 12 Debris
Recording Id 2RTR13-00166 **Procedure Id** INST-OI-12 **Revision** 52 **Approval Level** SPM
Is Test Pattern Resolution Ok? Yes **Start Side** A **Replicate** No **OIO** No
Audio Visual Ok? Yes **Operator** JCUMMINGS

Result Comment Contents of this drum is primarily plastic bagging and sheeting
AK concurs with the recommended IDC, RF-750, for container 10272388. No AKR or NCR is necessary. CHD 11/11/13

Package

IDC Correct Yes **Recommended IDC** **Summary Category** S5000
Idc Change Reason
Rigid Liner Present? No **LinerType** NO LINER
Liner Punctured? N/A **Sharp Objects?** No
Liner Lid Present? No **Sharp Objects Are Protected?** Yes
Liner Lid Deformed? N/A **Layers Of Confinement** 3
Fill Factor 90
Bag Closure Method Twisted and Taped

Liquids

Liquid Present? No
Internal Container with Liquid 0 pints
Liquid Between Liner & Drum 0 pints
Total Liquid Amount 0 pints
Other Liquids 0 pints
Prohibited Liquids Present No
Internal Container with Liquid No
LA Candidate No
Containerized Liquid
Containerized Liquid Amt 0 pints
Comment
Comment

Contents-Drum or Box

	Value	Comment		Value	Comment
Lead?	No		Mercury Present?	No	
Wet Cell Batteries?	No		Explosives?	No	
Prohibited Compressed Gases?	No		PCBs Present?	No	
Aerosol Cans?	No		PCB Mass (lbs)	0	
Non-Mixed Hazardous Waste Present?	No		Sealed Containers Over 4L?	No	

Non-Radionuclide Pyrophoric Materials Present? No
Waste exhibiting the characteristics of Ignitability, Corrosivity or Reactivity Present? No
Wastes Incompatible with backfill, seal and panel closure materials, container and packaging materials,shipping container or other wastes? No
Impenetrable Dense Objects? No

Waste Material Items

Packaging Materials

Material Item	Quantity	Unit	Unit Wt(lbs)	Item Wt(lbs)
Drum plastic bag	2.000	EACH	1.000	2.000
55-GAL DRUM (17c)	1.000	EACH	59.000	59.000

Waste Items byWeight

Material Item	Quantity	Unit	Unit Wt(lbs)	Item Wt(lbs)
misc. metal	1.000	EACH	4.000	4.000
Plastic bag for waste	1.000	EACH	0.250	0.250

Waste Items by Volume

Material Item	Quantity	Unit	Unit Wt(lbs)	Item Wt(lbs)
Oil-Dri (Inside 55 gal drum)	40.000	PINTS	0.420	16.800

AMWTP
Advanced Mixed Waste Treatment Project

AMWTP

RTR Analysis Report

Date: 22-Sep-2014
Time: 09:09

Batch Id RTR13-00275 **Container Id** 10272388 **Analysis Id** 0000093176

Waste Parameters

Waste Parameter	Remaining Weight %	Actual Weight Lbs
Iron-based Metals/Alloys	0.000	4.000
Aluminum-based Metals/Alloys	0.000	0.000
Other metals	0.000	0.000
Other Inorganic Materials	0.000	16.800
Cellulosics	0.000	0.000
Rubber	0.000	0.000
Plastic (Waste Materials)	100.000	124.055
Inorganic matrix	0.000	0.000
Organic matrix	0.000	0.000
Soils/gravel	0.000	0.000
Steel (packaging materials)	0.000	142.000
Plastic (packaging materials)	0.000	2.000
Cellulosics Packaging	0.000	0.000

Analysis Esignature History

Esig Approval Id	User Id	Esignature Date	Comment
2652472	CHINKLE	11-NOV-2013 13:18	Batch is promoted. chd 11/11/13
2650663	JCUMMINGS	07-NOV-2013 11:31	

AMWTP
Advanced Mixed Waste Treatment Project

AMWTP
RTR Analysis Report

Date: 22-Sep-2014
Time: 09:09

Batch Id RTR13-00275 **Container Id** 10268047 **Analysis Id** 0000093178
Container Type C drum, 83 Gallon **Analysis Status** Pass

RTR Date 07-NOV-2013 11:50 **Gross Weight** 275.625 **Lbs.** **Net Weight** 131.625 **Lbs**
Equipment Z-213-106 **Waste Matrix Code** S5490 **IDC** RF-750 Pits 11 & 12 Debris
Recording Id 2RTR13-00166 **Procedure Id** INST-OI-12 **Revision** 52 **Approval Level** SPM
Is Test Pattern Resolution Ok? Yes **Start Side** A **Replicate** No **OIO** No
Audio Visual Ok? Yes **Operator** JCUMMINGS

Result Comment Contents of this drum is primarily plastic bagging and PPE.
AK concurs with the recommended IDC, RF-750, for container 10268047. No AKR or NCR is necessary. CHD 11/11/13

Package

IDC Correct Yes **Recommended IDC** **Summary Category** S5000
Idc Change Reason
Rigid Liner Present? No **LinerType** NO LINER
Liner Punctured? N/A **Sharp Objects?** No
Liner Lid Present? No **Sharp Objects Are Protected?** Yes
Liner Lid Deformed? N/A **Layers Of Confinement** 3
Fill Factor 95
Bag Closure Method Twisted and Taped

Liquids

Liquid Present? No
Internal Container with Liquid 0 pints
Liquid Between Liner & Drum 0 pints
Total Liquid Amount 0 pints
Other Liquids 0 pints
Prohibited Liquids Present No

Internal Container with Liquid No
LA Candidate No
Containerized Liquid
Containerized Liquid Amt 0 pints
Comment
Comment

Contents-Drum or Box

	Value	Comment		Value	Comment
Lead?	No		Mercury Present?	No	
Wet Cell Batteries?	No		Explosives?	No	
Prohibited Compressed Gases?	No		PCBs Present?	No	
Aerosol Cans?	No		PCB Mass (lbs)	0	
Non-Mixed Hazardous Waste Present?	No		Sealed Containers Over 4L?	No	

Non-Radionuclide Pyrophoric Materials Present? No
Waste exhibiting the characteristics of Ignitability, Corrosivity or Reactivity Present? No
Wastes Incompatible with backfill, seal and panel closure materials, container and packaging materials,shipping container or other wastes? No
Impenetrable Dense Objects? No

Waste Material Items

Packaging Materials

Material Item	Quantity	Unit	Unit Wt(lbs)	Item Wt(lbs)
Drum plastic bag	2.000	EACH	1.000	2.000
55-GAL DRUM (17c)	1.000	EACH	59.000	59.000

Waste Items byWeight

Material Item	Quantity	Unit	Unit Wt(lbs)	Item Wt(lbs)
PPE	1.000	EACH	12.000	12.000
misc. metal	1.000	EACH	5.000	5.000
Plastic bag for waste	1.000	EACH	0.250	0.250

Waste Items by Volume

Material Item	Quantity	Unit	Unit Wt(lbs)	Item Wt(lbs)
Oil-Dri (Inside 55 gal drum)	45.000	PINTS	0.420	18.900

Batch Id RTR13-00275 **Container Id** 10268047 **Analysis Id** 0000093178

Waste Parameters

Waste Parameter	Remaining Weight %	Actual Weight Lbs
Iron-based Metals/Alloys	0.000	5.000
Aluminum-based Metals/Alloys	0.000	0.000
Other metals	0.000	0.000
Other Inorganic Materials	0.000	18.900
Cellulosics	0.000	12.000
Rubber	0.000	0.000
Plastic (Waste Materials)	100.000	95.725
Inorganic matrix	0.000	0.000
Organic matrix	0.000	0.000
Soils/gravel	0.000	0.000
Steel (packaging materials)	0.000	142.000
Plastic (packaging materials)	0.000	2.000
Cellulosics Packaging	0.000	0.000

Analysis Esignature History

Esig Approval Id	User Id	Esignature Date	Comment
2652476	CHINKLE	11-NOV-2013 13:18	Batch is promoted. chd 11/11/13
2650676	JCUMMINGS	07-NOV-2013 11:50	

AMWTP

Advanced Mixed Waste Treatment Project

AMWTP

RTR Analysis Report

Date: 22-Sep-2014

Time: 09:09

Batch Id RTR13-00275 **Container Id** 10268051 **Analysis Id** 0000093180

Container Type C drum, 83 Gallon **Analysis Status** Pass

RTR Date 07-NOV-2013 12:21 **Gross Weight** 652.680 **Lbs.** **Net Weight** 509.680 **Lbs**

Equipment Z-213-106 **Waste Matrix Code** S3121 **IDC** RF-741 Pits 11 & 12 First Stage Sludge

Recording Id 2RTR13-00166 **Procedure Id** INST-OI-12 **Revision** 52 **Approval Level** SPM

Is Test Pattern Resolution Ok? Yes **Start Side** A **Replicate** No **OIO** No

Audio Visual Ok? Yes **Operator** JCUMMINGS

Result Comment *Contents of this drum is primarily sludge.*
AK concurs with the recommended IDC, RF-741, for container 10268051. No AKR or NCR is necessary. CHD 11/11/13

Package

IDC Correct Yes **Recommended IDC** **Summary Category** S3000

Idc Change Reason

Rigid Liner Present? No **LinerType** NO LINER

Liner Punctured? N/A **Sharp Objects?** No

Liner Lid Present? No **Sharp Objects Are Protected?** Yes

Liner Lid Deformed? N/A **Layers Of Confinement** 1

Fill Factor 85

Bag Closure Method Twisted and Taped

Liquids

Liquid Present? No **Internal Container with Liquid** No

Internal Container with Liquid 0 pints **LA Candidate** No

Liquid Between Liner & Drum 0 pints **Containerized Liquid**

Total Liquid Amount 0 pints **Containerized Liquid Amt** 0 pints

Other Liquids 0 pints **Comment**

Prohibited Liquids Present No **Comment**

Contents-Drum or Box

	Value	Comment		Value	Comment
Lead?	No		**Mercury Present?**	No	
Wet Cell Batteries?	No		**Explosives?**	No	
Prohibited Compressed Gases?	No		**PCBs Present?**	No	
Aerosol Cans?	No		**PCB Mass (lbs)**	0	
Non-Mixed Hazardous Waste Present?	No		**Sealed Containers Over 4L?**	No	

Non-Radionuclide Pyrophoric Materials Present? No

Waste exhibiting the characteristics of Ignitability, Corrosivity or Reactivity Present? No

Wastes Incompatible with backfill, seal and panel closure materials, container and packaging materials,shipping container or other wastes? No

Impenetrable Dense Objects? No

Waste Material Items

Packaging Materials

Material Item	Quantity	Unit	Unit Wt(lbs)	Item Wt(lbs)
Drum plastic bag	1.000	EACH	1.000	1.000
55-GAL DRUM (17c)	1.000	EACH	59.000	59.000

Waste Items byWeight

Material Item	Quantity	Unit	Unit Wt(lbs)	Item Wt(lbs)

Waste Items by Volume

Material Item	Quantity	Unit	Unit Wt(lbs)	Item Wt(lbs)
Oil-Dri (Inside 55 gal drum)	45.000	PINTS	0.420	18.900

Batch Id RTR13-00275 **Container Id** 10268051 **Analysis Id** 0000093180

Waste Parameters

Waste Parameter	Remaining Weight %	Actual Weight Lbs
Iron-based Metals/Alloys	0.000	0.000
Aluminum-based Metals/Alloys	0.000	0.000
Other metals	0.000	0.000
Other Inorganic Materials	0.000	18.900
Cellulosics	0.000	0.000
Rubber	0.000	0.000
Plastic (Waste Materials)	0.000	0.000
Inorganic matrix	100.000	490.780
Organic matrix	0.000	0.000
Soils/gravel	0.000	0.000
Steel (packaging materials)	0.000	142.000
Plastic (packaging materials)	0.000	1.000
Cellulosics Packaging	0.000	0.000

Analysis Esignature History

Esig Approval Id	User Id	Esignature Date	Comment
2652475	CHINKLE	11-NOV-2013 13:18	Batch is promoted chd 11/11/13
2650700	JCUMMINGS	07-NOV-2013 12:21	

AMWTP
Advanced Mixed Waste Treatment Project

AMWTP

RTR Analysis Report

Date: 22-Sep-2014
Time: 09:09

Batch Id RTR13-00275 **Container Id** 10272403 **Analysis Id** 0000093184
Container Type C drum, 83 Gallon **Analysis Status** Pass

RTR Date 07-NOV-2013 13:15 **Gross Weight** 317.520 **Lbs.** **Net Weight** 173.520 **Lbs**
Equipment Z-213-106 **Waste Matrix Code** S5490 **IDC** RF-750 Pits 11 & 12 Debris
Recording Id 2RTR13-00166 **Procedure Id** INST-OI-12 **Revision** 52 **Approval Level** SPM
Is Test Pattern Resolution Ok? Yes **Start Side** A **Replicate** Yes **OIO** No
Audio Visual Ok? Yes **Operator** DSUMNERS

Result Comment Remaining waste appears to be primarily a combination of aluminum/cellulosics, respirator filters

Package

IDC Correct Yes **Recommended IDC** **Summary Category** S5000
Idc Change Reason
Rigid Liner Present? No **LinerType** NO LINER
Liner Punctured? N/A **Sharp Objects?** No
Liner Lid Present? No **Sharp Objects Are Protected?** Yes
Liner Lid Deformed? N/A **Layers Of Confinement** 3
Fill Factor 95
Bag Closure Method Twisted and Taped

Liquids

Liquid Present? No
Internal Container with Liquid 0 pints
Liquid Between Liner & Drum 0 pints
Total Liquid Amount 0 pints
Other Liquids 0 pints
Prohibited Liquids Present No

Internal Container with Liquid No
LA Candidate No
Containerized Liquid
Containerized Liquid Amt 0 pints
Comment
Comment

Contents-Drum or Box

	Value	Comment		Value	Comment
Lead?	No		Mercury Present?	No	
Wet Cell Batteries?	No		Explosives?	No	
Prohibited Compressed Gases?	No		PCBs Present?	No	
Aerosol Cans?	No		PCB Mass (lbs)	0	
Non-Mixed Hazardous Waste Present?	No		Sealed Containers Over 4L?	No	

Non-Radionuclide Pyrophoric Materials Present? No
Waste exhibiting the characteristics of Ignitability, Corrosivity or Reactivity Present? No
Wastes Incompatible with backfill, seal and panel closure materials, container and packaging materials,shipping container or other wastes? No
Impenetrable Dense Objects? No

Waste Material Items

Packaging Materials

Material Item	Quantity	Unit	Unit Wt(lbs)	Item Wt(lbs)
Drum plastic bag	2.000	EACH	1.000	2.000
55-GAL DRUM (17c)	1.000	EACH	59.000	59.000

Waste Items byWeight

Material Item	Quantity	Unit	Unit Wt(lbs)	Item Wt(lbs)
misc metals, radiac probe shields	1.000	EACH	1.000	1.000
Plastic bag for waste	1.000	EACH	0.250	0.250

Waste Items by Volume

Material Item	Quantity	Unit	Unit Wt(lbs)	Item Wt(lbs)
Oil-Dri (Inside 55 gal drum)	90.000	PINTS	0.420	37.800

Batch Id RTR13-00275 **Container Id** 10272403 **Analysis Id** 0000093184

Waste Parameters

Waste Parameter	Remaining Weight %	Actual Weight Lbs
Iron-based Metals/Alloys	0.000	1.000
Aluminum-based Metals/Alloys	70.000	94.129
Other metals	0.000	0.000
Other Inorganic Materials	0.000	37.800
Cellulosics	30.000	40.341
Rubber	0.000	0.000
Plastic (Waste Materials)	0.000	0.250
Inorganic matrix	0.000	0.000
Organic matrix	0.000	0.000
Soils/gravel	0.000	0.000
Steel (packaging materials)	0.000	142.000
Plastic (packaging materials)	0.000	2.000
Cellulosics Packaging	0.000	0.000

Analysis Esignature History

Esig Approval Id	User Id	Esignature Date	Comment
2650733	DSUMNERS	07-NOV-2013 13:15	

AMWTP
Advanced Mixed Waste Treatment Project

AMWTP
RTR Analysis Report

Date: 22-Sep-2014
Time: 09:09

Batch Id RTR13-00275 **Container Id** 10272388 **Analysis Id** 0000093185
Container Type C drum, 83 Gallon **Analysis Status** Pass

RTR Date 07-NOV-2013 13:33 **Gross Weight** 288.855 Lbs. **Net Weight** 144.855 Lbs
Equipment Z-213-106 **Waste Matrix Code** S5490 **IDC** RF-750 Pits 11 & 12 Debris
Recording Id 2RTR13-00166 **Procedure Id** INST-OI-12 **Revision** 52 **Approval Level** SPM
Is Test Pattern Resolution Ok? Yes **Start Side** A **Replicate** No **OIO** Yes
Audio Visual Ok? Yes **Operator** DSUMNERS

Result Comment Remaining waste appears to be primarily plastic waste materials, bagging and sheeting.

Package

IDC Correct Yes **Recommended IDC** **Summary Category** S5000
Idc Change Reason
Rigid Liner Present? No **LinerType** NO LINER
Liner Punctured? N/A **Sharp Objects?** No
Liner Lid Present? No **Sharp Objects Are Protected?** Yes
Liner Lid Deformed? N/A **Layers Of Confinement** 3
Fill Factor 90
Bag Closure Method Twisted and Taped

Liquids

Liquid Present? No
Internal Container with Liquid 0 pints
Liquid Between Liner & Drum 0 pints
Total Liquid Amount 0 pints
Other Liquids 0 pints
Prohibited Liquids Present No
Internal Container with Liquid No
LA Candidate No
Containerized Liquid
Containerized Liquid Amt 0 pints
Comment
Comment

Contents-Drum or Box

	Value	Comment		Value	Comment
Lead?	No		Mercury Present?	No	
Wet Cell Batteries?	No		Explosives?	No	
Prohibited Compressed Gases?	No		PCBs Present?	No	
Aerosol Cans?	No		PCB Mass (lbs)	0	
Non-Mixed Hazardous Waste Present?	No		Sealed Containers Over 4L?	No	

Non-Radionuclide Pyrophoric Materials Present? No
Waste exhibiting the characteristics of Ignitability, Corrosivity or Reactivity Present? No
Wastes Incompatible with backfill, seal and panel closure materials, container and packaging materials,shipping container or other wastes? No
Impenetrable Dense Objects? No

Waste Material Items

Packaging Materials

Material Item	Quantity	Unit	Unit Wt(lbs)	Item Wt(lbs)
Drum plastic bag	2.000	EACH	1.000	2.000
55-GAL DRUM (17c)	1.000	EACH	59.000	59.000

Waste Items byWeight

Material Item	Quantity	Unit	Unit Wt(lbs)	Item Wt(lbs)
misc metals, fasteners,brushes,box cover	1.000	EACH	2.000	2.000
Plastic bag for waste	1.000	EACH	0.250	0.250

Waste Items by Volume

Material Item	Quantity	Unit	Unit Wt(lbs)	Item Wt(lbs)
Oil-Dri (Inside 55 gal drum)	70.000	PINTS	0.420	29.400

Batch Id RTR13-00275 **Container Id** 10272388 **Analysis Id** 0000093185

Waste Parameters

Waste Parameter	Remaining Weight %	Actual Weight Lbs
Iron-based Metals/Alloys	0.000	2.000
Aluminum-based Metals/Alloys	0.000	0.000
Other metals	0.000	0.000
Other Inorganic Materials	0.000	29.400
Cellulosics	0.000	0.000
Rubber	0.000	0.000
Plastic (Waste Materials)	100.000	113.455
Inorganic matrix	0.000	0.000
Organic matrix	0.000	0.000
Soils/gravel	0.000	0.000
Steel (packaging materials)	0.000	142.000
Plastic (packaging materials)	0.000	2.000
Cellulosics Packaging	0.000	0.000

RTR Independent Observation

Obsolete	Performed	User Name	Checklist	Answer
No	16-NOV-2013 17:38	JSIMONSON	1.Was an independent observation performed?	Yes
			2.Were all items on the recording media identified correctly in WTS?	Yes
			3.Do you agree with the operator?	No

Comment On 07-Nov-2013 a qualified operator performed the OIO analysis for batch RTR13-00275 on container 10272388. There was a difference in the Waste Items by Volume between the original analysis and the OIO analysis. This difference does not affect the original disposition of the container or the DQOs. I agree with the original operator. No rework will be performed on the OIO analysis.

Independent Observation Esignature History

Esig Approval Id	User Id	Esignature Date	Comment
2655798	JSIMONSON	16-NOV-2013 17:39	ITR OIO Comparison complete.

Analysis Esignature History

Esig Approval Id	User Id	Esignature Date	Comment
2650740	DSUMNERS	07-NOV-2013 13.33	

AMWTP
Advanced Mixed Waste Treatment Project

AMWTP
RTR Analysis Report

Date: 22-Sep-2014
Time: 09:09

Batch Id RTR13-00275 **Container Id** 10232790 **Analysis Id** 0000093187
Container Type C drum, 83 Gallon **Analysis Status** Pass

RTR Date 07-NOV-2013 14:51 **Gross Weight** 441.000 Lbs. **Net Weight** 297.000 Lbs
Equipment Z-213-106 **Waste Matrix Code** S5490 **IDC** RF-241 Americium Process Residue
Recording Id 2RTR13-00166 **Procedure Id** INST-OI-12 **Revision** 52 **Approval Level** SPM
Is Test Pattern Resolution Ok? Yes **Start Side** A **Replicate** No **OIO** No
Audio Visual Ok? Yes **Operator** DSUMNERS

Result Comment Remaining waste appears to be indeterminable due to lead liner in 30 gal drum.
(rework) Per RTR SME recommended IDC change from RF-241 to UN-00B because AK evaluation is required. K.H. 23NOV13
AK does not concur with the recommended IDC change from RF-241 to UN-00B for container 10232790. Instead, AK recommends retaining the original IDC of RF-241. CHD 11/26/13
Rework to keep RF-241 IDC per AK. DKL 11/28/13

Package

IDC Correct Yes **Recommended IDC** **Summary Category** S5000
Idc Change Reason
Rigid Liner Present? No **LinerType** NO LINER
Liner Punctured? N/A **Sharp Objects?** No
Liner Lid Present? No **Sharp Objects Are Protected?** Yes
Liner Lid Deformed? N/A **Layers Of Confinement** 3
Fill Factor 95
Bag Closure Method Twisted and Taped

Liquids

Liquid Present? No **Internal Container with Liquid** No
Internal Container with Liquid 0 pints **LA Candidate** No
Liquid Between Liner & Drum 0 pints **Containerized Liquid**
Total Liquid Amount 0 pints **Containerized Liquid Amt** 0 pints
Other Liquids 0 pints **Comment**
Prohibited Liquids Present No **Comment**

Contents-Drum or Box

	Value	Comment		Value	Comment
Lead?	Yes, Rejected	lead lined 30 gal drum	**Mercury Present?**	No	
Wet Cell Batteries?	No		**Explosives?**	No	
Prohibited Compressed Gases?	No		**PCBs Present?**	No	
Aerosol Cans?	No		**PCB Mass (lbs)**	0	
Non-Mixed Hazardous Waste Present?	No		**Sealed Containers Over 4L?**	Yes	30 gal drum

Non-Radionuclide Pyrophoric Materials Present? No
Waste exhibiting the characteristics of Ignitability, Corrosivity or Reactivity Present? No
Wastes Incompatible with backfill, seal and panel closure materials, container and packaging materials,shipping container or other wastes? No
Impenetrable Dense Objects? Yes - Unacceptable lead lined 30 gal drum.

Waste Material Items

Packaging Materials

Material Item	Quantity	Unit	Unit Wt(lbs)	Item Wt(lbs)
Drum plastic bag	2.000	EACH	1.000	2.000
55-GAL DRUM (17c)	1.000	EACH	59.000	59.000

Waste Items byWeight

Material Item	Quantity	Unit	Unit Wt(lbs)	Item Wt(lbs)
30 gal drum lead liner, 1/8" thick	1.000	EACH	55.000	55.000
30 gal drum	1.000	EACH	30.000	30.000
Cardboard liner	1.000	EACH	4.000	4.000

AMWTP

Advanced Mixed Waste Treatment Project

AMWTP

RTR Analysis Report

Date: 22-Sep-2014

Time: 09:09

Batch Id RTR13-00275 **Container Id** 10232790 **Analysis Id** 0000093187

Waste Items by Volume

Material Item	Quantity	Unit	Unit Wt(lbs)	Item Wt(lbs)
Oil-Dri (Inside 55 gal drum)	92.000	PINTS	0.420	38.640

Waste Parameters

Waste Parameter	Remaining Weight %	Actual Weight Lbs
Iron-based Metals/Alloys	0.000	30.000
Aluminum-based Metals/Alloys	0.000	0.000
Other metals	0.000	55.000
Other Inorganic Materials	100.000	208.000
Cellulosics	0.000	4.000
Rubber	0.000	0.000
Plastic (Waste Materials)	0.000	0.000
Inorganic matrix	0.000	0.000
Organic matrix	0.000	0.000
Soils/gravel	0.000	0.000
Steel (packaging materials)	0.000	142.000
Plastic (packaging materials)	0.000	2.000
Cellulosics Packaging	0.000	0.000

Analysis Esignature History

Esig Approval Id	User Id	Esignature Date	Comment
2661212	DLEE	28-NOV-2013 05:40	
2659951	CHINKLE	26-NOV-2013 07:12	This batch is returned for rework. AK does not concur with the recommended IDC change for container 10232790 CHD 11/26/13
2658641	KHUGHES	23-NOV-2013 12:24	rework
2650787	DSUMNERS	07-NOV-2013 14:51	

Batch Id RTR13-00275 **Container Id** 10145394 **Analysis Id** 0000093188

Container Type 83u 83 Gallon unmarked and non-DOT apprvd cntr **Analysis Status** Pass

RTR Date 07-NOV-2013 15:13 **Gross Weight** 233.730 **Lbs.** **Net Weight** 90.730 **Lbs**

Equipment Z-213-106 **Waste Matrix Code** S5490 **IDC** RF-750 Pits 11 & 12 Debris

Recording Id 2RTR13-00166 **Procedure Id** INST-OI-12 **Revision** 52 **Approval Level** SPM

Is Test Pattern Resolution Ok? Yes **Start Side** A **Replicate** No **OIO** No

Audio Visual Ok? Yes **Operator** DSUMNERS

Result Comment Remaining waste appears to be primarily plastic waste materials, sheeting and bagging.

Package

IDC Correct Yes **Recommended IDC** **Summary Category** S5000

Idc Change Reason

Rigid Liner Present? No **LinerType** NO LINER

Liner Punctured? N/A **Sharp Objects?** No

Liner Lid Present? No **Sharp Objects Are Protected?** Yes

Liner Lid Deformed? N/A **Layers Of Confinement** 2

Fill Factor 65

Bag Closure Method Twisted and Taped

Liquids

Liquid Present? No **Internal Container with Liquid** No

Internal Container with Liquid 0 pints **LA Candidate** No

Liquid Between Liner & Drum 0 pints **Containerized Liquid**

Total Liquid Amount 0 pints **Containerized Liquid Amt** 0 pints

Other Liquids 0 pints **Comment**

Prohibited Liquids Present No **Comment**

Contents-Drum or Box

	Value	Comment		Value	Comment
Lead?	No		**Mercury Present?**	No	
Wet Cell Batteries?	No		**Explosives?**	No	
Prohibited Compressed Gases?	No		**PCBs Present?**	No	
Aerosol Cans?	No		**PCB Mass (lbs)**	0	
Non-Mixed Hazardous Waste Present?	No		**Sealed Containers Over 4L?**	No	

Non-Radionuclide Pyrophoric Materials Present? No

Waste exhibiting the characteristics of Ignitability, Corrosivity or Reactivity Present? No

Wastes Incompatible with backfill, seal and panel closure materials, container and packaging materials,shipping container or other wastes? No

Impenetrable Dense Objects? No

Waste Material Items

Packaging Materials

Material Item	Quantity	Unit	Unit Wt(lbs)	Item Wt(lbs)
Drum plastic bag	1.000	EACH	1.000	1.000
55-GAL DRUM (17c)	1.000	EACH	59.000	59.000

Waste Items byWeight

Material Item	Quantity	Unit	Unit Wt(lbs)	Item Wt(lbs)
metals, flanges, fasteners, fittings, wire	1.000	EACH	15.000	15.000
Plastic bag for waste	2.000	EACH	0.250	0.500

Waste Items by Volume

Material Item	Quantity	Unit	Unit Wt(lbs)	Item Wt(lbs)
Oil-Dri (Inside 55 gal drum)	40.000	PINTS	0.420	16.800

AMWTP

Advanced Mixed Waste Treatment Project

AMWTP

RTR Analysis Report

Date: 22-Sep-2014

Time: 09:09

Batch Id RTR13-00275 **Container Id** 10145394 **Analysis Id** 0000093188

Waste Parameters

Waste Parameter	Remaining Weight %	Actual Weight Lbs
Iron-based Metals/Alloys	0.000	15.000
Aluminum-based Metals/Alloys	0.000	0.000
Other metals	0.000	0.000
Other Inorganic Materials	0.000	16.800
Cellulosics	0.000	0.000
Rubber	0.000	0.000
Plastic (Waste Materials)	100.000	58.930
Inorganic matrix	0.000	0.000
Organic matrix	0.000	0.000
Soils/gravel	0.000	0.000
Steel (packaging materials)	0.000	142.000
Plastic (packaging materials)	0.000	1.000
Cellulosics Packaging	0.000	0.000
MLLW Waste	0.000	0.000

Analysis Esignature History

Esig Approval Id	User Id	Esignature Date	Comment
2650813	DSUMNERS	07-NOV-2013 15:13	

Batch Id RTR13-00275 **Container Id** 10291002 **Analysis Id** 0000093191

Container Type C drum, 83 Gallon **Analysis Status** Pass

RTR Date 07-NOV-2013 16:42 **Gross Weight** 213.885 **Lbs.** **Net Weight** 55.885 **Lbs**

Equipment Z-213-106 **Waste Matrix Code** S5390 **IDC** BL-010 Rags, Gloves, Poly

Recording Id 2RTR13-00166 **Procedure Id** INST-OI-12 **Revision** 52 **Approval Level** SPM

Is Test Pattern Resolution Ok? Yes **Start Side** A **Replicate** No **OIO** No

Audio Visual Ok? Yes **Operator** DSUMNERS

Result Comment Remaining waste appears to be primarily plastic waste materials, sheeting, bagging, tubing, bottles.

Package

IDC Correct Yes **Recommended IDC** **Summary Category** S5000

Idc Change Reason

Rigid Liner Present? Yes **LinerType** TYPE 1

Liner Punctured? Yes **Sharp Objects?** No

Liner Lid Present? Yes **Sharp Objects Are Protected?** Yes

Liner Lid Deformed? No **Layers Of Confinement** 1

Fill Factor 70

Bag Closure Method Twisted and Taped

Liquids

Liquid Present? Yes **Internal Container with Liquid** Yes

Internal Container with Liquid .03 pints **LA Candidate** No

Liquid Between Liner & Drum 0 pints **Containerized Liquid**

Containerized Liquid Amt 0 pints

Total Liquid Amount .03 pints

Other Liquids 0 pints **Comment**

Prohibited Liquids Present No **Comment**

Contents-Drum or Box

	Value	Comment		Value	Comment
Lead?	No		**Mercury Present?**	No	
Wet Cell Batteries?	No		**Explosives?**	No	
Prohibited Compressed Gases?	Yes	unvented empty aerosol cans	**PCBs Present?**	No	
Aerosol Cans?	Yes	unvented empty aerosol cans	**PCB Mass (lbs)**	0	
Non-Mixed Hazardous Waste Present?	No		**Sealed Containers Over 4L?**	No	

Non-Radionuclide Pyrophoric Materials Present? No

Waste exhibiting the characteristics of Ignitability, Corrosivity or Reactivity Present? No

Wastes Incompatible with backfill, seal and panel closure materials, container and packaging materials,shipping container or other wastes? No

Impenetrable Dense Objects? No

Waste Material Items

Packaging Materials

Material Item	Quantity	Unit	Unit Wt(lbs)	Item Wt(lbs)
90 mil liner	1.000	EACH	16.000	16.000
55-GAL DRUM (17c)	1.000	EACH	59.000	59.000

Waste Items byWeight

Material Item	Quantity	Unit	Unit Wt(lbs)	Item Wt(lbs)
cardboard material	1.000	EACH	5.000	5.000
gages, fasteners,strapping, fittings	1.000	EACH	5.000	5.000
Plastic bag for waste	4.000	EACH	0.250	1.000
Aerosol Can	2.000	EACH	0.240	0.480

Waste Items by Volume

Material Item	Quantity	Unit	Unit Wt(lbs)	Item Wt(lbs)
Liquids for Other Inorganics	0.030	PINTS	1.000	0.030

Batch Id RTR13-00275 **Container Id** 10291002 **Analysis Id** 0000093191

Waste Parameters

Waste Parameter	Remaining Weight %	Actual Weight Lbs
Iron-based Metals/Alloys	0.000	5.480
Aluminum-based Metals/Alloys	0.000	0.000
Other metals	0.000	0.000
Other Inorganic Materials	0.000	0.030
Cellulosics	0.000	5.000
Rubber	0.000	0.000
Plastic (Waste Materials)	100.000	45.375
Inorganic matrix	0.000	0.000
Organic matrix	0.000	0.000
Soils/gravel	0.000	0.000
Steel (packaging materials)	0.000	142.000
Plastic (packaging materials)	0.000	16.000
Cellulosics Packaging	0.000	0.000

Analysis Esignature History

Esig Approval Id	User Id	Esignature Date	Comment
2650937	DSUMNERS	07-NOV-2013 16:42	

AMWTP

Advanced Mixed Waste Treatment Project

AMWTP

RTR Analysis Report

Date: 22-Sep-2014

Time: 09:09

Batch Id RTR13-00275 **Container Id** 10145320 **Analysis Id** 0000093194

Container Type C drum, 83 Gallon **Analysis Status** Pass

RTR Date 07-NOV-2013 17:28 **Gross Weight** 809.235 Lbs. **Net Weight** 665.235 Lbs

Equipment Z-213-106 **Waste Matrix Code** S5490 **IDC** RF-750 Pits 11 & 12 Debris

Recording Id 2RTR13-00166 **Procedure Id** INST-OI-12 **Revision** 52 **Approval Level** SPM

Is Test Pattern Resolution Ok? Yes **Start Side** A **Replicate** No **OIO** No

Audio Visual Ok? Yes **Operator** DSUMNERS

Result Comment Remaining waste appears to be primarily other metals, cut up lead sheeting.

Package

IDC Correct Yes **Recommended IDC** **Summary Category** S5000

Idc Change Reason

Rigid Liner Present? No **LinerType** NO LINER

Liner Punctured? N/A **Sharp Objects?** No

Liner Lid Present? No **Sharp Objects Are Protected?** Yes

Liner Lid Deformed? N/A **Layers Of Confinement** 2

Fill Factor 50

Bag Closure Method Twisted and Taped

Liquids

Liquid Present? No **Internal Container with Liquid** No

Internal Container with Liquid 0 pints **LA Candidate** No

Liquid Between Liner & Drum 0 pints **Containerized Liquid**

Total Liquid Amount 0 pints **Containerized Liquid Amt** 0 pints

Other Liquids 0 pints **Comment**

Prohibited Liquids Present No **Comment**

Contents-Drum or Box

	Value	Comment		Value	Comment
Lead?	Yes, Rejected	lead sheeting various thickness	**Mercury Present?**	No	
Wet Cell Batteries?	No		**Explosives?**	No	
Prohibited Compressed Gases?	No		**PCBs Present?**	No	
Aerosol Cans?	No		**PCB Mass (lbs)**	0	
Non-Mixed Hazardous Waste Present?	No		**Sealed Containers Over 4L?**	No	

Non-Radionuclide Pyrophoric Materials Present? No

Waste exhibiting the characteristics of Ignitability, Corrosivity or Reactivity Present? No

Wastes Incompatible with backfill, seal and panel closure materials, container and packaging materials,shipping container or other wastes? No

Impenetrable Dense Objects? Yes - Unacceptable lead sheeting

Waste Material Items

Packaging Materials

Material Item	Quantity	Unit	Unit Wt(lbs)	Item Wt(lbs)
Drum plastic bag	2.000	EACH	1.000	2.000
55-GAL DRUM (17c)	1.000	EACH	59.000	59.000

Waste Items byWeight

Material Item	Quantity	Unit	Unit Wt(lbs)	Item Wt(lbs)

Waste Items by Volume

Material Item	Quantity	Unit	Unit Wt(lbs)	Item Wt(lbs)
Oil-Dri (Inside 55 gal drum)	90.000	PINTS	0.420	37.800

Batch Id RTR13-00275 **Container Id** 10145320 **Analysis Id** 0000093194

Waste Parameters

Waste Parameter	Remaining Weight %	Actual Weight Lbs
Iron-based Metals/Alloys	0.000	0.000
Aluminum-based Metals/Alloys	0.000	0.000
Other metals	100.000	627.435
Other Inorganic Materials	0.000	37.800
Cellulosics	0.000	0.000
Rubber	0.000	0.000
Plastic (Waste Materials)	0.000	0.000
Inorganic matrix	0.000	0.000
Organic matrix	0.000	0.000
Soils/gravel	0.000	0.000
Steel (packaging materials)	0.000	142.000
Plastic (packaging materials)	0.000	2.000
Cellulosics Packaging	0.000	0.000

Analysis Esignature History

Esig Approval Id	User Id	Esignature Date	Comment
2650970	DSUMNERS	07-NOV-2013 17:28	

AMWTP
Advanced Mixed Waste Treatment Project

AMWTP
RTR Analysis Report

Date: 22-Sep-2014
Time: 09:09

Batch Id RTR13-00275 **Container Id** 10504976 **Analysis Id** 0000093196
Container Type C drum, 83 Gallon **Analysis Status** Pass

RTR Date 07-NOV-2013 17:51 **Gross Weight** 672.525 **Lbs.** **Net Weight** 529.525 **Lbs**
Equipment Z-213-106 **Waste Matrix Code** S3150 **IDC** RF-004 Special Setups
Recording Id 2RTR13-00166 **Procedure Id** INST-OI-12 **Revision** 52 **Approval Level** SPM
Is Test Pattern Resolution Ok? Yes **Start Side** A **Replicate** No **OIO** No
Audio Visual Ok? Yes **Operator** DSUMNERS

Result Comment Remaining waste appears to be primarily Inorganic matrix, sludge.

Package

IDC Correct Yes **Recommended IDC** **Summary Category** S3000
Idc Change Reason
Rigid Liner Present? No **LinerType** NO LINER
Liner Punctured? N/A **Sharp Objects?** No
Liner Lid Present? No **Sharp Objects Are Protected?** Yes
Liner Lid Deformed? N/A **Layers Of Confinement** 1
Fill Factor 95
Bag Closure Method Twisted and Taped

Liquids

Liquid Present? Yes
Internal Container with Liquid 0 pints
Liquid Between Liner & Drum 0 pints
Total Liquid Amount 3 pints
Other Liquids 3 pints
Prohibited Liquids Present No
Internal Container with Liquid No
LA Candidate No
Containerized Liquid
Containerized Liquid Amt 0 pints
Comment Approx 3 pints liquid at bottom of 55 gal drum around outside of waste in bagging.
Comment

Contents-Drum or Box

	Value	Comment		Value	Comment
Lead?	No		Mercury Present?	No	
Wet Cell Batteries?	No		Explosives?	No	
Prohibited Compressed Gases?	No		PCBs Present?	No	
Aerosol Cans?	No		PCB Mass (lbs)	0	
Non-Mixed Hazardous Waste Present?	No		Sealed Containers Over 4L?	No	

Non-Radionuclide Pyrophoric Materials Present? No
Waste exhibiting the characteristics of Ignitability, Corrosivity or Reactivity Present? No
Wastes Incompatible with backfill, seal and panel closure materials, container and packaging materials,shipping container or other wastes? No
Impenetrable Dense Objects? No

Waste Material Items

Packaging Materials

Material Item	Quantity	Unit	Unit Wt(lbs)	Item Wt(lbs)
Drum plastic bag	1.000	EACH	1.000	1.000
55-GAL DRUM (17c)	1.000	EACH	59.000	59.000

Waste Items byWeight

Material Item	Quantity	Unit	Unit Wt(lbs)	Item Wt(lbs)

Waste Items by Volume

Material Item	Quantity	Unit	Unit Wt(lbs)	Item Wt(lbs)
Liquids for Inorganic Matrix	3.000	PINTS	1.000	3.000

Batch Id RTR13-00275 **Container Id** 10504976 **Analysis Id** 0000093196

Waste Parameters

Waste Parameter	Remaining Weight %	Actual Weight Lbs
Iron-based Metals/Alloys	0.000	0.000
Aluminum-based Metals/Alloys	0.000	0.000
Other metals	0.000	0.000
Other Inorganic Materials	0.000	0.000
Cellulosics	0.000	0.000
Rubber	0.000	0.000
Plastic (Waste Materials)	0.000	0.000
Inorganic matrix	100.000	529.525
Organic matrix	0.000	0.000
Soils/gravel	0.000	0.000
Steel (packaging materials)	0.000	142.000
Plastic (packaging materials)	0.000	1.000
Cellulosics Packaging	0.000	0.000

Analysis Esignature History

Esig Approval Id	User Id	Esignature Date	Comment
2650984	DSUMNERS	07-NOV-2013 17:51	

AMWTP
Advanced Mixed Waste Treatment Project

AMWTP
RTR Analysis Report

Date: 22-Sep-2014
Time: 09:09

Batch Id RTR13-00275 **Container Id** 10090085 **Analysis Id** 0000093198
Container Type C drum, 83 Gallon **Analysis Status** Pass

RTR Date 08-NOV-2013 09:10 **Gross Weight** 282.240 Lbs. **Net Weight** 123.240 Lbs
Equipment Z-213-106 **Waste Matrix Code** S5100 **IDC** RF-441 Raschig Rings, Unleached
Recording Id 2RTR13-00166 **Procedure Id** INST-OI-12 **Revision** 52 **Approval Level** SPM
Is Test Pattern Resolution Ok? Yes **Start Side** A **Replicate** No **OIO** No
Audio Visual Ok? Yes **Operator** CTIEGS

Result Comment Remaining waste appears to contain Raschig rings.

Package

IDC Correct Yes **Recommended IDC** **Summary Category** S5000
Idc Change Reason
Rigid Liner Present? Yes **LinerType** TYPE I
Liner Punctured? Yes **Sharp Objects?** No
Liner Lid Present? Yes **Sharp Objects Are Protected?** Yes
Liner Lid Deformed? No **Layers Of Confinement** 2
Fill Factor 65
Bag Closure Method Twisted and Taped

Liquids

Liquid Present? No
Internal Container with Liquid 0 pints
Liquid Between Liner & Drum 0 pints
Total Liquid Amount 0 pints
Other Liquids 0 pints
Prohibited Liquids Present No
Internal Container with Liquid No
LA Candidate No
Containerized Liquid
Containerized Liquid Amt 0 pints
Comment
Comment

Contents-Drum or Box

	Value	Comment		Value	Comment
Lead?	No		**Mercury Present?**	No	
Wet Cell Batteries?	No		**Explosives?**	No	
Prohibited Compressed Gases?	No		**PCBs Present?**	No	
Aerosol Cans?	No		**PCB Mass (lbs)**	0	
Non-Mixed Hazardous Waste Present?	No		**Sealed Containers Over 4L?**	No	

Non-Radionuclide Pyrophoric Materials Present? No
Waste exhibiting the characteristics of Ignitability, Corrosivity or Reactivity Present? No
Wastes Incompatible with backfill, seal and panel closure materials, container and packaging materials,shipping container or other wastes? No
Impenetrable Dense Objects? No

Waste Material Items

Packaging Materials

Material Item	Quantity	Unit	Unit Wt(lbs)	Item Wt(lbs)
90 mil liner	1.000	EACH	16.000	16.000
Drum plastic bag	1.000	EACH	1.000	1.000
55-GAL DRUM (17c)	1.000	EACH	59.000	59.000

Waste Items byWeight

Material Item	Quantity	Unit	Unit Wt(lbs)	Item Wt(lbs)
Fiber pack	2.000	EACH	6.000	12.000
Plastic bag for waste	5.000	EACH	0.250	1.250

Waste Items by Volume

Material Item	Quantity	Unit	Unit Wt(lbs)	Item Wt(lbs)
Oil-Dri (Inside 55 gal drum)	6.000	PINTS	0.420	2.520

Batch Id RTR13-00275 **Container Id** 10090085 **Analysis Id** 0000093198

Waste Parameters

Waste Parameter	Remaining Weight %	Actual Weight Lbs
Iron-based Metals/Alloys	0.000	0.000
Aluminum-based Metals/Alloys	0.000	0.000
Other metals	0.000	0.000
Other Inorganic Materials	100.000	109.990
Cellulosics	0.000	12.000
Rubber	0.000	0.000
Plastic (Waste Materials)	0.000	1.250
Inorganic matrix	0.000	0.000
Organic matrix	0.000	0.000
Soils/gravel	0.000	0.000
Steel (packaging materials)	0.000	142.000
Plastic (packaging materials)	0.000	17.000
Cellulosics Packaging	0.000	0.000

Analysis Esignature History

Esig Approval Id	User Id	Esignature Date	Comment
2651140	CTIEGS	08-NOV-2013 09:10	

AMWTP

Advanced Mixed Waste Treatment Project

AMWTP

RTR Analysis Report

Date: 22-Sep-2014

Time: 09:09

Batch Id RTR13-00275 **Container Id** 10230734 **Analysis Id** 0000093201

Container Type C drum, 83 Gallon **Analysis Status** Pass

RTR Date 08-NOV-2013 10:30 **Gross Weight** 235.935 Lbs. **Net Weight** 91.935 Lbs

Equipment Z-213-106 **Waste Matrix Code** S5300 **IDC** RF-336 Paper and Rags-Moist

Recording Id 2RTR13-00166 **Procedure Id** INST-OI-12 **Revision** 52 **Approval Level** SPM

Is Test Pattern Resolution Ok? Yes **Start Side** A **Replicate** No **OIO** No

Audio Visual Ok? Yes **Operator** CTIEGS

Result Comment Waste appears to be plastic sheeting.
Ran by Chelsie Beard under OJT supervision

Package

IDC Correct Yes **Recommended IDC** **Summary Category** S5000

Idc Change Reason

Rigid Liner Present? No **LinerType** NO LINER

Liner Punctured? N/A **Sharp Objects?** No

Liner Lid Present? No **Sharp Objects Are Protected?** Yes

Liner Lid Deformed? N/A **Layers Of Confinement** 2

Fill Factor 80

Bag Closure Method Twisted and Taped

Liquids

Liquid Present? Yes

Internal Container with Liquid 0 pints

Liquid Between Liner & Drum 0 pints

Total Liquid Amount 2 pints

Other Liquids 2 pints

Prohibited Liquids Present No

Internal Container with Liquid No

LA Candidate No

Containerized Liquid

Containerized Liquid Amt 0 pints

Comment 2 pint liquid in bagging towards the bottom

Comment

Contents-Drum or Box

	Value	Comment
Lead?	Yes. Acceptable	lead tape
Wet Cell Batteries?	No	
Prohibited Compressed Gases?	No	
Aerosol Cans?	No	
Non-Mixed Hazardous Waste Present?	No	

	Value	Comment
Mercury Present?	No	
Explosives?	No	
PCBs Present?	No	
PCB Mass (lbs)	0	
Sealed Containers Over 4L?	No	

Non-Radionuclide Pyrophoric Materials Present? No

Waste exhibiting the characteristics of Ignitability, Corrosivity or Reactivity Present? No

Wastes Incompatible with backfill, seal and panel closure materials, container and packaging materials,shipping container or other wastes? No

Impenetrable Dense Objects? No

Waste Material Items

Packaging Materials

Material Item	Quantity	Unit	Unit Wt(lbs)	Item Wt(lbs)
Drum plastic bag	2.000	EACH	1.000	2.000
55-GAL DRUM (17c)	1.000	EACH	59.000	59.000

Waste Items byWeight

Material Item	Quantity	Unit	Unit Wt(lbs)	Item Wt(lbs)
Misc metals	1.000	EACH	0.500	0.500
Cardboard tubes	1.000	EACH	3.000	3.000
lead tape	1.000	EACH	0.250	0.250
Cardboard liner	1.000	EACH	4.000	4.000
Plastic bag for waste	1.000	EACH	0.250	0.250

AMWTP

Advanced Mixed Waste Treatment Project

AMWTP

RTR Analysis Report

Date: 22-Sep-2014

Time: 09:09

Batch Id RTR13-00275 **Container Id** 10230734 **Analysis Id** 0000093201

Waste Items by Volume

Material Item	Quantity	Unit	Unit Wt(lbs)	Item Wt(lbs)
Oil-Dri (Inside 55 gal drum)	20.000	PINTS	0.420	8.400
Liquids for Other Inorganics	2.000	PINTS	1.000	2.000

Waste Parameters

Waste Parameter	Remaining Weight %	Actual Weight Lbs
Iron-based Metals/Alloys	0.000	0.500
Aluminum-based Metals/Alloys	0.000	0.000
Other metals	0.000	0.250
Other Inorganic Materials	0.000	10.400
Cellulosics	0.000	7.000
Rubber	0.000	0.000
Plastic (Waste Materials)	100.000	73.785
Inorganic matrix	0.000	0.000
Organic matrix	0.000	0.000
Soils/gravel	0.000	0.000
Steel (packaging materials)	0.000	142.000
Plastic (packaging materials)	0.000	2.000
Cellulosics Packaging	0.000	0.000

Analysis Esignature History

Esig Approval Id	User Id	Esignature Date	Comment
2651191	CTIEGS	08-NOV-2013 10:30	

AMWTP
Advanced Mixed Waste Treatment Project

AMWTP

RTR Analysis Report

Date: 22-Sep-2014
Time: 09:09

Batch Id RTR13-00275 **Container Id** 10222995 **Analysis Id** 0000093203
Container Type C drum, 83 Gallon **Analysis Status** Pass

RTR Date 08-NOV-2013 11:06 **Gross Weight** 436.590 **Lbs.** **Net Weight** 277.590 **Lbs**
Equipment Z-213-106 **Waste Matrix Code** S5490 **IDC** RF-241 Americium Process Residue
Recording Id 2RTR13-00166 **Procedure Id** INST-OI-12 **Revision** 52 **Approval Level** SPM
Is Test Pattern Resolution Ok? Yes **Start Side** A **Replicate** No **OIO** No
Audio Visual Ok? Yes **Operator** CTIEGS

Result Comment Remaining waste appears to contain paper and rags.

Package

IDC Correct Yes **Recommended IDC** **Summary Category** S5000
Idc Change Reason
Rigid Liner Present? Yes **LinerType** TYPE I
Liner Punctured? Yes **Sharp Objects?** No
Liner Lid Present? Yes **Sharp Objects Are Protected?** Yes
Liner Lid Deformed? No **Layers Of Confinement** 2
Fill Factor 95
Bag Closure Method Twisted and Taped

Liquids

Liquid Present? No **Internal Container with Liquid** No
Internal Container with Liquid 0 pints **LA Candidate** No
Liquid Between Liner & Drum 0 pints **Containerized Liquid** **Containerized Liquid Amt** 0 pints
Total Liquid Amount 0 pints
Other Liquids 0 pints **Comment**
Prohibited Liquids Present No **Comment**

Contents-Drum or Box

	Value	Comment		Value	Comment
Lead?	Yes, Rejected	lead lined 30 gal drum	**Mercury Present?**	No	
Wet Cell Batteries?	No		**Explosives?**	No	
Prohibited Compressed Gases?	No		**PCBs Present?**	No	
Aerosol Cans?	No		**PCB Mass (lbs)**	0	
Non-Mixed Hazardous Waste Present?	No		**Sealed Containers Over 4L?**	Yes	30 gal drum with lid

Non-Radionuclide Pyrophoric Materials Present? No
Waste exhibiting the characteristics of Ignitability, Corrosivity or Reactivity Present? No
Wastes Incompatible with backfill, seal and panel closure materials, container and packaging materials,shipping container or other wastes? No
Impenetrable Dense Objects? Yes - Unacceptable lead lined 30 gal drum

Waste Material Items

Packaging Materials

Material Item	Quantity	Unit	Unit Wt(lbs)	Item Wt(lbs)
90 mil liner	1.000	EACH	16.000	16.000
Drum plastic bag	1.000	EACH	1.000	1.000
55-GAL DRUM (17c)	1.000	EACH	59.000	59.000

Waste Items byWeight

Material Item	Quantity	Unit	Unit Wt(lbs)	Item Wt(lbs)
lead liner in 30 gal drum	1.000	EACH	65.000	65.000
30 gal drum	1.000	EACH	32.000	32.000

Waste Items by Volume

Material Item	Quantity	Unit	Unit Wt(lbs)	Item Wt(lbs)
Oil-Dri (Inside 55 gal drum)	160.000	PINTS	0.420	67.200

Batch Id RTR13-00275 **Container Id** 10222995 **Analysis Id** 0000093203

Waste Parameters

Waste Parameter	Remaining Weight %	Actual Weight Lbs
Iron-based Metals/Alloys	0.000	32.000
Aluminum-based Metals/Alloys	0.000	0.000
Other metals	0.000	65.000
Other Inorganic Materials	0.000	67.200
Cellulosics	100.000	113.390
Rubber	0.000	0.000
Plastic (Waste Materials)	0.000	0.000
Inorganic matrix	0.000	0.000
Organic matrix	0.000	0.000
Soils/gravel	0.000	0.000
Steel (packaging materials)	0.000	142.000
Plastic (packaging materials)	0.000	17.000
Cellulosics Packaging	0.000	0.000

Analysis Esignature History

Esig Approval Id	User Id	Esignature Date	Comment
2651203	CTIEGS	08-NOV-2013 11:06	

AMWTP
Advanced Mixed Waste Treatment Project

AMWTP

RTR Analysis Report

Date: 22-Sep-2014
Time: 09:09

Batch Id RTR13-00275 **Container Id** 10343624 **Analysis Id** 0000093206
Container Type C drum, 83 Gallon **Analysis Status** Pass

RTR Date 08-NOV-2013 12:12 **Gross Weight** 216.090 **Lbs.** **Net Weight** 72.090 **Lbs**
Equipment Z-213-106 **Waste Matrix Code** S5300 **IDC** RF-336 Paper and Rags-Moist
Recording Id 2RTR13-00166 **Procedure Id** INST-OI-12 **Revision** 52 **Approval Level** SPM
Is Test Pattern Resolution Ok? Yes **Start Side** A **Replicate** No **OIO** No
Audio Visual Ok? Yes **Operator** CTIEGS

Result Comment Waste appears to be Paper and rags.
Ran by Chelsie Beard under instruction OJT.

Package

IDC Correct Yes **Recommended IDC** **Summary Category** S5000
Idc Change Reason
Rigid Liner Present? No **LinerType** NO LINER
Liner Punctured? N/A **Sharp Objects?** No
Liner Lid Present? No **Sharp Objects Are Protected?** Yes
Liner Lid Deformed? N/A **Layers Of Confinement** 3
Fill Factor 95
Bag Closure Method Twisted and Taped

Liquids

Liquid Present? Yes
Internal Container with Liquid .02 pints
Liquid Between Liner & Drum 0 pints
Total Liquid Amount .02 pints
Other Liquids 0 pints
Prohibited Liquids Present No

Internal Container with Liquid Yes
LA Candidate No
Containerized Liquid
Containerized Liquid Amt 0 pints
Comment .02 pints in plastic poly bottles. One bottle toward the bottom and one middle chine of 55.
Comment

Contents-Drum or Box

	Value	Comment		Value	Comment
Lead?	No		Mercury Present?	No	
Wet Cell Batteries?	No		Explosives?	No	
Prohibited Compressed Gases?	No		PCBs Present?	No	
Aerosol Cans?	No		PCB Mass (lbs)	0	
Non-Mixed Hazardous Waste Present?	No		Sealed Containers Over 4L?	No	

Non-Radionuclide Pyrophoric Materials Present? No
Waste exhibiting the characteristics of Ignitability, Corrosivity or Reactivity Present? No
Wastes Incompatible with backfill, seal and panel closure materials, container and packaging materials,shipping container or other wastes? No
Impenetrable Dense Objects? No

Waste Material Items

Packaging Materials

Material Item	Quantity	Unit	Unit Wt(lbs)	Item Wt(lbs)
Drum plastic bag	2.000	EACH	1.000	2.000
55-GAL DRUM (17c)	1.000	EACH	59.000	59.000

Waste Items byWeight

Material Item	Quantity	Unit	Unit Wt(lbs)	Item Wt(lbs)
Plastic poly bottles and bagging	1.000	EACH	5.000	5.000
Misc Metals	1.000	EACH	2.000	2.000
Cardboard liner	1.000	EACH	4.000	4.000
Plastic bag for waste	1.000	EACH	0.250	0.250

AMWTP
Advanced Mixed Waste Treatment Project

AMWTP

RTR Analysis Report

Date: 22-Sep-2014

Time: 09:09

Batch Id RTR13-00275 **Container Id** 10343624 **Analysis Id** 0000093206

Waste Items by Volume

Material Item	Quantity	Unit	Unit Wt(lbs)	Item Wt(lbs)
Oil-Dri (Inside 55 gal drum)	3.000	PINTS	0.420	1.260
Liquids for Other Inorganics	0.020	PINTS	1.000	0.020

Waste Parameters

Waste Parameter	Remaining Weight %	Actual Weight Lbs
Iron-based Metals/Alloys	0.000	2.000
Aluminum-based Metals/Alloys	0.000	0.000
Other metals	0.000	0.000
Other Inorganic Materials	0.000	1.280
Cellulosics	100.000	63.560
Rubber	0.000	0.000
Plastic (Waste Materials)	0.000	5.250
Inorganic matrix	0.000	0.000
Organic matrix	0.000	0.000
Soils/gravel	0.000	0.000
Steel (packaging materials)	0.000	142.000
Plastic (packaging materials)	0.000	2.000
Cellulosics Packaging	0.000	0.000

Analysis Esignature History

Esig Approval Id	User Id	Esignature Date	Comment
2651216	CTIEGS	08-NOV-2013 12:12	

AMWTP
Advanced Mixed Waste Treatment Project

AMWTP
RTR Analysis Report

Date: 22-Sep-2014
Time: 09:09

Batch Id RTR13-00275 **Container Id** 10140281 **Analysis Id** 0000093209
Container Type C drum, 83 Gallon **Analysis Status** Pass

RTR Date 08-NOV-2013 13:31 **Gross Weight** 341.775 **Lbs.** **Net Weight** 199.775 **Lbs**
Equipment Z-213-106 **Waste Matrix Code** S5490 **IDC** RF-750 Pits 11 & 12 Debris
Recording Id 2RTR13-00166 **Procedure Id** INST-OI-12 **Revision** 52 **Approval Level** SPM
Is Test Pattern Resolution Ok? Yes **Start Side** A **Replicate** No **OIO** No
Audio Visual Ok? Yes **Operator** DMOORE

Result Comment Remaining waste appears to be bricks and brick pieces.

Package

IDC Correct Yes **Recommended IDC** **Summary Category** S5000
Idc Change Reason
Rigid Liner Present? No **LinerType** NO LINER
Liner Punctured? N/A **Sharp Objects?** No
Liner Lid Present? No **Sharp Objects Are Protected?** Yes
Liner Lid Deformed? N/A **Layers Of Confinement** 1
Fill Factor 90
Bag Closure Method No Bags

Liquids

Liquid Present? No **Internal Container with Liquid** No
Internal Container with Liquid 0 pints **LA Candidate** No
Liquid Between Liner & Drum 0 pints **Containerized Liquid**
Total Liquid Amount 0 pints **Containerized Liquid Amt** 0 pints
Other Liquids 0 pints **Comment**
Prohibited Liquids Present No **Comment**

Contents-Drum or Box

	Value	Comment		Value	Comment
Lead?	No		Mercury Present?	No	
Wet Cell Batteries?	No		Explosives?	No	
Prohibited Compressed Gases?	No		PCBs Present?	No	
Aerosol Cans?	No		PCB Mass (lbs)	0	
Non-Mixed Hazardous Waste Present?	No		Sealed Containers Over 4L?	Yes	sealed 30 gallon drum

Non-Radionuclide Pyrophoric Materials Present? No
Waste exhibiting the characteristics of Ignitability, Corrosivity or Reactivity Present? No
Wastes Incompatible with backfill, seal and panel closure materials, container and packaging materials,shipping container or other wastes? No
Impenetrable Dense Objects? No

Waste Material Items

Packaging Materials

Material Item	Quantity	Unit	Unit Wt(lbs)	Item Wt(lbs)
55-GAL DRUM (17c)	1.000	EACH	59.000	59.000

Waste Items byWeight

Material Item	Quantity	Unit	Unit Wt(lbs)	Item Wt(lbs)
lid rings, square vent, misc metals	1.000	EACH	4.000	4.000
30 sealed gallon drum	1.000	EACH	30.000	30.000
1 Gal. Paint Can w/ Lid	2.000	EACH	0.840	1.680

Waste Items by Volume

Material Item	Quantity	Unit	Unit Wt(lbs)	Item Wt(lbs)
Oil-Dri (Inside 55 gal drum)	65.000	PINTS	0.420	27.300

AMWTP
Advanced Mixed Waste Treatment Project

AMWTP

RTR Analysis Report

Date: 22-Sep-2014

Time: 09:09

Batch Id RTR13-00275 **Container Id** 10140281 **Analysis Id** 0000093209

Waste Parameters

Waste Parameter	Remaining Weight %	Actual Weight Lbs
Iron-based Metals/Alloys	0.000	35.680
Aluminum-based Metals/Alloys	0.000	0.000
Other metals	0.000	0.000
Other Inorganic Materials	100.000	164.095
Cellulosics	0.000	0.000
Rubber	0.000	0.000
Plastic (Waste Materials)	0.000	0.000
Inorganic matrix	0.000	0.000
Organic matrix	0.000	0.000
Soils/gravel	0.000	0.000
Steel (packaging materials)	0.000	142.000
Plastic (packaging materials)	0.000	0.000
Cellulosics Packaging	0.000	0.000

Analysis Esignature History

Esig Approval Id	User Id	Esignature Date	Comment
2651234	DMOORE	08-NOV-2013 13:31	

AMWTP
Advanced Mixed Waste Treatment Project

AMWTP
RTR Analysis Report

Date: 22-Sep-2014
Time: 09:09

Batch Id RTR13-00275 **Container Id** 10145949 **Analysis Id** 0000093211
Container Type 83u 83 Gallon unmarked and non-DOT apprvd cntr **Analysis Status** Pass

RTR Date 08-NOV-2013 13:53 **Gross Weight** 445.410 Lbs. **Net Weight** 301.410 Lbs
Equipment Z-213-106 **Waste Matrix Code** S5490 **IDC** RF-750 Pits 11 & 12 Debris
Recording Id 2RTR13-00166 **Procedure Id** INST-OI-12 **Revision** 52 **Approval Level** SPM
Is Test Pattern Resolution Ok? Yes **Start Side** A **Replicate** No **OIO** No
Audio Visual Ok? Yes **Operator** DMOORE

Result Comment Remaining waste appears to be square large and small leaded 1/4 inch thick metal pieces.

Package

IDC Correct Yes **Recommended IDC** **Summary Category** S5000
Idc Change Reason
Rigid Liner Present? No **LinerType** NO LINER
Liner Punctured? N/A **Sharp Objects?** No
Liner Lid Present? No **Sharp Objects Are Protected?** Yes
Liner Lid Deformed? N/A **Layers Of Confinement** 2
Fill Factor 70
Bag Closure Method Twisted and Taped

Liquids

Liquid Present? No
Internal Container with Liquid 0 pints
Liquid Between Liner & Drum 0 pints
Total Liquid Amount 0 pints
Other Liquids 0 pints
Prohibited Liquids Present No
Internal Container with Liquid No
LA Candidate No
Containerized Liquid
Containerized Liquid Amt 0 pints
Comment
Comment

Contents-Drum or Box

	Value	Comment		Value	Comment
Lead?	Yes. Acceptable	possible pieces of leaded objects	**Mercury Present?**	No	
Wet Cell Batteries?	No		**Explosives?**	No	
Prohibited Compressed Gases?	No		**PCBs Present?**	No	
Aerosol Cans?	No		**PCB Mass (lbs)**	0	
Non-Mixed Hazardous Waste Present?	No		**Sealed Containers Over 4L?**	No	

Non-Radionuclide Pyrophoric Materials Present? No
Waste exhibiting the characteristics of Ignitability, Corrosivity or Reactivity Present? No
Wastes Incompatible with backfill, seal and panel closure materials, container and packaging materials,shipping container or other wastes? No
Impenetrable Dense Objects? No

Waste Material Items

Packaging Materials

Material Item	Quantity	Unit	Unit Wt(lbs)	Item Wt(lbs)
Drum plastic bag	2.000	EACH	1.000	2.000
55-GAL DRUM (17c)	1.000	EACH	59.000	59.000

Waste Items byWeight

Material Item	Quantity	Unit	Unit Wt(lbs)	Item Wt(lbs)

Waste Items by Volume

Material Item	Quantity	Unit	Unit Wt(lbs)	Item Wt(lbs)
Oil-Dri (Inside 55 gal drum)	45.000	PINTS	0.420	18.900

Batch Id RTR13-00275 **Container Id** 10145949 **Analysis Id** 0000093211

Waste Parameters

Waste Parameter	Remaining Weight %	Actual Weight Lbs
Iron-based Metals/Alloys	0.000	0.000
Aluminum-based Metals/Alloys	0.000	0.000
Other metals	100.000	282.510
Other Inorganic Materials	0.000	18.900
Cellulosics	0.000	0.000
Rubber	0.000	0.000
Plastic (Waste Materials)	0.000	0.000
Inorganic matrix	0.000	0.000
Organic matrix	0.000	0.000
Soils/gravel	0.000	0.000
Steel (packaging materials)	0.000	142.000
Plastic (packaging materials)	0.000	2.000
Cellulosics Packaging	0.000	0.000

Analysis Esignature History

Esig Approval Id	User Id	Esignature Date	Comment
2651260	DMOORE	08-NOV-2013 14:03	added 55 gallon drum to waste parameters
2651254	DMOORE	08-NOV-2013 13:53	

AMWTP
Advanced Mixed Waste Treatment Project

AMWTP
RTR Analysis Report

Date: 22-Sep-2014
Time: 09:09

Batch Id RTR13-00275 **Container Id** 10113545 **Analysis Id** 0000093213
Container Type C drum, 83 Gallon **Analysis Status** Pass

RTR Date 08-NOV-2013 14:23 **Gross Weight** 291.060 Lbs. **Net Weight** 148.060 Lbs
Equipment Z-213-106 **Waste Matrix Code** S5490 **IDC** RF-750 Pits 11 & 12 Debris
Recording Id 2RTR13-00166 **Procedure Id** INST-OI-12 **Revision** 52 **Approval Level** SPM
Is Test Pattern Resolution Ok? Yes **Start Side** A **Replicate** No **OIO** No
Audio Visual Ok? Yes **Operator** DMOORE

Result Comment Remaining waste appears to be plastic sheeting, small round containers, and tube PVC items.

Package

IDC Correct Yes **Recommended IDC** **Summary Category** S5000
Idc Change Reason
Rigid Liner Present? No **LinerType** NO LINER
Liner Punctured? N/A **Sharp Objects?** No
Liner Lid Present? No **Sharp Objects Are Protected?** Yes
Liner Lid Deformed? N/A **Layers Of Confinement** 2
Fill Factor 100
Bag Closure Method Twisted and Taped

Liquids

Liquid Present? No **Internal Container with Liquid** No
Internal Container with Liquid 0 pints **LA Candidate** No
Liquid Between Liner & Drum 0 pints **Containerized Liquid**
Total Liquid Amount 0 pints **Containerized Liquid Amt** 0 pints
Other Liquids 0 pints **Comment**
Prohibited Liquids Present No **Comment**

Contents-Drum or Box

	Value	Comment		Value	Comment
Lead?	No		Mercury Present?	No	
Wet Cell Batteries?	No		Explosives?	No	
Prohibited Compressed Gases?	No		PCBs Present?	No	
Aerosol Cans?	No		PCB Mass (lbs)	0	
Non-Mixed Hazardous Waste Present?	No		Sealed Containers Over 4L?	No	

Non-Radionuclide Pyrophoric Materials Present? No
Waste exhibiting the characteristics of Ignitability, Corrosivity or Reactivity Present? No
Wastes Incompatible with backfill, seal and panel closure materials, container and packaging materials,shipping container or other wastes? No
Impenetrable Dense Objects? No

Waste Material Items

Packaging Materials

Material Item	Quantity	Unit	Unit Wt(lbs)	Item Wt(lbs)
Drum plastic bag	1.000	EACH	1.000	1.000
55-GAL DRUM (17c)	1.000	EACH	59.000	59.000

Waste Items byWeight

Material Item	Quantity	Unit	Unit Wt(lbs)	Item Wt(lbs)
paper, rags, cardboard empty tape rolls	1.000	EACH	30.000	30.000
Plastic bag for waste	1.000	EACH	0.250	0.250

Waste Items by Volume

Material Item	Quantity	Unit	Unit Wt(lbs)	Item Wt(lbs)
Oil-Dri (Inside 55 gal drum)	75.000	PINTS	0.420	31.500

AMWTP

Advanced Mixed Waste Treatment Project

AMWTP

RTR Analysis Report

Date: 22-Sep-2014

Time: 09:09

Batch Id RTR13-00275 **Container Id** 10113545 **Analysis Id** 0000093213

Waste Parameters

Waste Parameter	Remaining Weight %	Actual Weight Lbs
Iron-based Metals/Alloys	0.000	0.000
Aluminum-based Metals/Alloys	0.000	0.000
Other metals	0.000	0.000
Other Inorganic Materials	0.000	31.500
Cellulosics	0.000	30.000
Rubber	0.000	0.000
Plastic (Waste Materials)	100.000	86.560
Inorganic matrix	0.000	0.000
Organic matrix	0.000	0.000
Soils/gravel	0.000	0.000
Steel (packaging materials)	0.000	142.000
Plastic (packaging materials)	0.000	1.000
Cellulosics Packaging	0.000	0.000

Analysis Esignature History

Esig Approval Id	User Id	Esignature Date	Comment
2651271	DMOORE	08-NOV-2013 14:23	

------End of RTR Analysis Report------

AMWTP

Advanced Mixed Waste Treatment Project

AMWTP

RTR Replicate Comparison Report

Date: 22-Sep-2014

Time: 09:10

RTR Batch Id: RTR13-00275 **Container Id:** 10272403 **Equipment Id:** Z-213-106

Container type Description: drum, 83 Gallon Gen-IDC: RF-750 Gross Weight(Lbs): 317.52

	Original Analysis		Replicate Analysis	
Analysis Id / Date:	0000093174	07-NOV-2013 11:13	0000093184	07-NOV-2013 13:15
Procedure /Revision:	INST-OI-12	52	INST-OI-12	52
Recording Media Id:	2RTR13-00166		2RTR13-00166	
Starting Position:	A		A	
Is Test Pattern Resolution Ok?	Y		Y	
Audio Visual Ok?	Y		Y	
Personnel Name:	KRISANN HUGHES		DAVEY SUMNERS	
IDC Ok? / Recommended IDC:	Y		Y	
IDC Change Reason:				
Summary Category / Waste matrix Code:	S5000	S5490	S5000	S5490
Packaging				
Rigid Liner Present?	N		N	
Liner Type Code:	NO LINER		NO LINER	
Liner Punctured:	NA		NA	
Liner Lid Deformed:	NA		NA	
Layers Of Confinement:	3		3	
Sharp Objects?	N		N	
Sharp Objects Protected?	Y		Y	
Fill Factor(%):	98		95	
Bag Closure Method:	Twisted and Taped		Twisted and Taped	
Liner Lid Present?:	N		N	
Liquids: (Volume in Pints)				
Liquid Present?	N		N	
Internal Container with Liquid?	0		0	
Containerized Liquid	N		N	
Other Liquids:	0		0	
Internal Container with Liquid Amt:	0		0	
Liquid Between Liner and Drum:	0		0	
Containerized Liquid:	0		0	
Total Liquid Amount:	0		0	
LA Candidate?	N		N	
Prohibited Liquids Present	N		N	

Contents:	Y/N	Comments	Y/N	Comments
Sealed Containers over 4L?	N		N	
Lead Present?	N		N	
Explosives Present?	N		N	
Mercury Present?	N		N	
Wet Cell Batteries Detected?	N		N	

AMWTP

Advanced Mixed Waste Treatment Project

AMWTP

RTR Replicate Comparison Report

Date: 22-Sep-2014

Time: 09:10

RTR Batch Id: RTR13-00275 **Container Id:** 10272403 **Equipment Id:** Z-213-106

	Original Analysis	Replicate Analysis
Prohibited Compressed Gas Present?	N	N
PCBs Present?	N	N
PCB Mass (lbs)	0	0
Non-Radionuclide Pyrophoric Materials Present?	N	N
Waste exhibiting the characteristics of ignitability, Corrosivity or reactivity Present?	N	N
Non-Mixed Hazardous Waste Present?	N	N
Waste Incompatibles with backfill, Seal and panel closure materials, container and packaging material, shipping container or other wastes?	N	N
Impenetrable Dense Objects?	N	N
Result Comment:	Contents of this drum is primarily respirator cartridges AK concurs with the recommended IDC, RF-750, for container 10272403. No AKR or NCR is necessary. CHD 11/11/13 (rework) Updated Remaining Contents of Container. K.H. 11-17-13	Remaining waste appears to be primarily a combination of aluminum/cellulosics, respirator filters.

----------E-signature----------

Esig Approval ID	User ID	Signature Date	Comment
2655792	JSIMONSON	16-NOV-13	ITR Replicate Comparison complete.

-----End of RTR Replicate Comparison Report-----

AMWTP

Advanced Mixed Waste Treatment Project

AMWTP

RTR OIO Comparison Report

Date: 22-Sep-2014

Time: 09:10

RTR Batch Id: RTR13-00275 **Container Id:** 10272388 **Equipment Id:** Z-213-106

Container type Description: **drum, 83 Gallon** Gen-IDC: **RF-750** Gross Weight(Lbs): **288.855**

	Original Analysis		OIO Analysis	
Analysis Id / Date:	0000093176	07-NOV-2013 11:31	0000093185	07-NOV-2013 13:33
Procedure /Revision:	INST-OI-12	52	INST-OI-12	52
Recording Media Id:	2RTR13-00166		2RTR13-00166	
Starting Position:	A		A	
Is Test Pattern Resolution Ok?	Y		Y	
Audio Visual Ok?	Y		Y	
Personnel Name:	JOHN CUMMINGS		DAVEY SUMNERS	
IDC Ok? / Recommended IDC:	Y		Y	
IDC Change Reason:				
Summary Category / Waste matrix Code:	S5000	S5490	S5000	S5490
Packaging				
Rigid Liner Present?	N		N	
Liner Type Code:	NO LINER		NO LINER	
Liner Punctured:	NA		NA	
Liner Lid Deformed:	NA		NA	
Layers Of Confinement:	3		3	
Sharp Objects?	N		N	
Sharp Objects Protected?	Y		Y	
Fill Factor(%):	90		90	
Bag Closure Method:	Twisted and Taped		Twisted and Taped	
Liner Lid Present?:	N		N	
Liquids: (Volume in Pints)				
Liquid Present?	N		N	
Internal Container with Liquid?	0		0	
Containerized Liquid	N		N	
Other Liquids:	0		0	
Internal Container with Liquid Amt:	0		0	
Liquid Between Liner and Drum:	0		0	
Containerized Liquid:	0		0	
Total Liquid Amount:	0		0	
LA Candidate?	N		N	
Prohibited Liquids Present	N		N	

Contents:	Y/N	Comments	Y/N	Comments
Sealed Containers over 4L?	N		N	
Lead Present?	N		N	
Explosives Present?	N		N	
Mercury Present?	N		N	
Wet Cell Batteries Detected?	N		N	

AMWTP
Advanced Mixed Waste Treatment Project

AMWTP

RTR OIO Comparison Report

Date: 22-Sep-2014

Time: 09:10

RTR Batch Id: RTR13-00275 **Container Id: 10272388** **Equipment Id: Z-213-106**

	Original Analysis	OIO Analysis
Prohibited Compressed Gas Present?	N	N
PCBs Present?	N	N
PCB Mass (lbs)	0	0
Non-Radionuclide Pyrophoric Materials Present?	N	N
Waste exhibiting the characteristics of ignitability, Corrosivity or reactivity Present?	N	N
Non-Mixed Hazardous Waste Present?	N	N
Waste Incompatibles with backfill, Seal and panel closure materials, container and packaging material, shipping container or other wastes?	N	N
Impenetrable Dense Objects?	N	N
Result Comment:	Contents of this drum is primarily plastic bagging and sheeting. AK concurs with the recommended IDC, RF-750, for container 10272388. No AKR or NCR is necessary. CHD 11/11/13	Remaining waste appears to be primarily plastic waste materials, bagging and sheeting.

----------E-signature----------

Esig Approval ID	User ID	Signature Date	Comment

-----End of RTR OIO Comparison Report-----

RECORD
CORRECTION
RTR03-00066
SWALKER
06/20/2013

AK28

RTR03-00066
BATCH DATA REPORT

Record 9/17/04

Report Date: 11/26/03

Narrative:

This report provides test results and documentation for the Real Time Radiography examination of the following containers using INST-OI-12.

Software Change Request #191 has been generated to delete any "L" or "R" designations after the procedure number. These designations identify the Left or Right machine and are not pertinent to the procedure.

The following Nonconformance Reports are associated with and attached to this Batch Data Report:

Position	Signature	Date
AMWTP Site Project Manager		2-3-04
AMWTP Site Quality Assurance Officer	N/A	

2-4-04
6/20/13

001

RTR03-00066 Table of Contents

Contents
Batch Narrative
Table of Contents
Report Cover Sheet
RTR Analysis Reports
RTR Replicate Comparison Report
RTR Status Log
WTS WMF-634 Temperature
RTR Independent Technical Reviewer Checklist
RTR Technical Supervisor Checklist
RTR Quality Assurance Checklist
RTR Quality Assurance Officer Checklist
Acceptable Knowledge RTR Checklist
Site Project Manager Checklist
Batch Comments
Nonconformance Reports

AMWTP
Advanced Mixed Waste Treatment Project

BNFL, Inc.

Batch Report Coversheet

Date: 01-Dec-2003

Time: 21:20

Batch Type	Real Time Radiography			**Batch Report No.**	RTR03-00066
Batch Id	RTR03-00066	**Open Date**	05-NOV-03 13:07:33	**Close Date**	06-NOV-03 15:15:02
Batch Status	PROMOTED				
Test Facility	Idaho AMWTP	**Procedure Id**	INST-OI-12-R	**Revision Id**	15
Equipment Id	Z-213-106	RTR Station Right (213-106)			

Container Id	Analysis Id	Date Examined	Qc Type	Analysis Status	Operator
10001362	0000001290	05-NOV-03 13:07:33	Original	P	DENISE LEE
10001368	0000001291	05-NOV-03 13:46:45	Original	P	GARY PETERSEN
10001230	0000001292	05-NOV-03 14:08:54	Original	P	DENISE LEE
10001357	0000001294	05-NOV-03 14:50:19	Original	P	DENISE LEE
10001360	0000001296	05-NOV-03 15:03:21	Original	P	DENISE LEE
10001370	0000001297	05-NOV-03 15:16:47	Original	P	DENISE LEE
10001369	0000001299	05-NOV-03 15:28:28	Original	P	DENISE LEE
10001322	0000001301	05-NOV-03 16:29:58	Original	P	SHAWN JORDAN
10001323	0000001303	05-NOV-03 16:54:52	Original	P	SHAWN JORDAN
10001324	0000001304	05-NOV-03 17:40:17	Original	P	SHAWN JORDAN
10001321	0000001305	05-NOV-03 18:02:40	Original	P	SHAWN JORDAN
10001334	0000001306	06-NOV-03 08:56:45	Original	P	GARY PETERSEN
10001233	0000001307	06-NOV-03 09:29:21	Original	P	GARY PETERSEN
10001238	0000001308	06-NOV-03 10:12:14	Original	P	GARY PETERSEN
10001320	0000001309	06-NOV-03 11:18:45	Original	P	SHAWN JORDAN
10001233	0000001310	06-NOV-03 11:45:31	Replicate / Duplicate	P	SHAWN JORDAN
10001365	0000001311	06-NOV-03 12:55:52	Original	P	GARY PETERSEN
10001227	0000001312	06-NOV-03 13:15:32	Original	P	GARY PETERSEN
10001226	0000001313	06-NOV-03 13:39:32	Original	P	GARY PETERSEN
10001228	0000001314	06-NOV-03 14:38:03	Original	P	GARY PETERSEN
10001237	0000001315	06-NOV-03 15:15:02	Original	P	SHAWN JORDAN

***** End of Batch Report Coversheet Report *****

003

AMWTP
Advanced Mixed Waste Treatment Project

BNFL, Inc.

Batch Report Coversheet

Date: 26-Nov-2003

Time: 07:11

SUPERCEDED CRW 12-17-03

Batch Type Real Time Radiography

Batch Report No. RTR03-00066

Batch Id RTR03-00066 **Open Date** 05-NOV-03 13:07:33 **Close Date** 06-NOV-03 15:15:02

Batch Status PROMOTED

Test Facility Idaho AMWTP **Procedure Id** INST-OI-12-R **Revision Id** 15

Equipment Id Z-213-106 RTR Station Right (213-106)

Container Id	Analysis Id	Date Examined	Qc Type	Analysis Status	Operator
10001362	0000001290	05-NOV-03 13:07:33	Original	P	DENISE LEE
10001368	0000001291	05-NOV-03 13:46:45	Original	P	GARY PETERSEN
10001230	0000001292	05-NOV-03 14:08:54	Original	P	DENISE LEE
10001357	0000001294	05-NOV-03 14:50:19	Original	P	DENISE LEE
10001360	0000001296	05-NOV-03 15:03:21	Original	P	DENISE LEE
10001370	0000001297	05-NOV-03 15:16:47	Original	P	DENISE LEE
10001369	0000001299	05-NOV-03 15:28:28	Original	P	DENISE LEE
10001322	0000001301	05-NOV-03 16:29:58	Original	P	SHAWN JORDAN
10001323	0000001303	05-NOV-03 16:54:52	Original	P	SHAWN JORDAN
10001324	0000001304	05-NOV-03 17:40:17	Original	P	SHAWN JORDAN
10001321	0000001305	05-NOV-03 18:02:40	Original	P	SHAWN JORDAN
10001334	0000001306	06-NOV-03 08:56:45	Original	P	GARY PETERSEN
10001233	0000001307	06-NOV-03 09:29:21	Original	P	GARY PETERSEN
10001238	0000001308	06-NOV-03 10:12:14	Original	P	GARY PETERSEN
10001320	0000001309	06-NOV-03 11:18:45	Original	P	SHAWN JORDAN
10001233	0000001310	06-NOV-03 11:45:31	Replicate / Duplicate	P	SHAWN JORDAN
10001365	0000001311	06-NOV-03 12:55:52	Original	P	GARY PETERSEN
10001227	0000001312	06-NOV-03 13:15:32	Original	P	GARY PETERSEN
10001226	0000001313	06-NOV-03 13:39:32	Original	P	GARY PETERSEN
10001228	0000001314	06-NOV-03 14:38:03	Original	P	GARY PETERSEN
10001237	0000001315	06-NOV-03 15:15:02	Original	P	SHAWN JORDAN

***** End of Batch Report Coversheet Report *****

003 SUPERCEDED CRW 12.17-03

AMWTP
Advanced Mixed Waste Treatment Project

BNFL, Inc.

RTR Analysis Report

Date: 26-Nov-2003

Time: 07:11

Batch Id RTR03-00066 **Container Id** 10001226 **Analysis Id** 0000001313

Container Type A **Analysis Status** Pass

RTR Date 06-NOV-2003 13:39 **Gross Weight in lbs.** 743.09 **Net Weight in lbs.** 663.09

Equipment Z-213-106 **Waste Matrix Code** S3150 **IDC** RF-004 Special Setups

Recording Id 2RTR03-00056 **Procedure Id** INST-OI-12-R **Revision** 15 **Approval Level** ITR

Is Test Pattern Resolution Ok? Yes **Start Side** A **Replicate** No

Audio Visual Ok? Yes **Closure Date** 09-MAR-1983 00:00 **Operator** GARY PETERSEN

Result Comment THIS IS A REWORK DRUM. THIS DRUM APPEARS TO BE SLUDGE, ONE DRUM BAG, ONE O-RING BAG, APPROX. 5 GAL. OF VERMICULITE ON TOP OF THE BAGGING AND NO PROHIBITED ITEMS. GDP 11-06-03

Package

IDC Correct Yes **Recommended IDC** **Summary Category Code** S3000

Idc Change Reason

Liner Present? Yes **LinerType** TYPE 2

LinerPunctured? Yes **Sharp Objects Are Protected?** Yes

Fill Factor 90 **LayersOfPacking** 2

Bag Closure Method Twisted and Taped

Liquids

Liquid Present? No **Over One Inch of Liquid** No

Comment

Total Liquid Amount 0 pints **Liquid Between Liner and Drum** 0 pints

Liquid in Bags 0 pints **Containerized Liquid** 0 pints

Contents-Drum or Box

	Value	Comment		Value	Comment
Lead?	No		Mercury Present?	No	
Batteries?	No		Explosives?	No	
Compressed Gases?	No		PCBs Present?	No	
Non-Mixed Hazardous Waste Present?	No		Sealed Containers Over 4L?	No	
Non-Radionuclide Pyrophoric Materials Present?	No				
Waste exhibiting the characteristics of Ignitability, Corrosivity or Reactivity Present?	No				
Wastes Incompatible with backfill, seal and panel closure materials, container and packaging materials,shipping container or other wastes?	No				

Waste Material Items

Packaging Materials

Material Item	Quantity	Unit	Unit Wt(lbs)	Item Wt(lbs)
90 mil liner	1.000	EACH	16.000	16.000
Drum plastic bag	1.000	EACH	1.000	1.000
Box plastic liner	0.000	EACH	5.000	0.000
O-ring plastic bag in sludge, organic setups, etc.	1.000	EACH	4.000	4.000

Waste Items by Weight

Material Item	Quantity	Unit	Unit Wt(lbs)	Item Wt(lbs)
Cardboard liner (graphite mold waste)	0.000	EACH	4.000	0.000
Fiber pack	0.000	EACH	6.000	0.000
Box fiberboard liner	0.000	EACH	15.000	0.000
55-GAL DRUM (17c)	0.000	EACH	59.000	0.000
Plastic bag for waste	0.000	EACH	0.250	0.000
Lead brick 2 x 4 x 8 in.	0.000	EACH	25.000	0.000
Leaded rubber glove	0.000	EACH	5.500	0.000
Leaded rubber apron	0.000	EACH	5.250	0.000
Drum lead-liner (1/8"x28"x72")(.4lb/in.cubed)	0.000	EACH	100.000	0.000
Drum lead-liner (1/16"x28"x72")	0.000	EACH	50.000	0.000
Poly bottles (1 gal)	0.000	EACH	1.000	0.000
Metal can	0.000	EACH	0.500	0.000

004

AMWTP
Advanced Mixed Waste Treatment Project

BNFL, Inc.

RTR Analysis Report

Date: 26-Nov-2003

Time: 07:11

Batch Id RTR03-00066 **Container Id** 10001226 **Analysis Id** 0000001313

Waste Items by Volume

Material Item	Quantity	Unit	Unit Wt(lbs)	Item Wt(lbs)
Vermiculite (95 gm/liter) .125 lb/pint	40.000	PINTS	0.125	5.000
Oil-Dri (404 gm/liter) 0.42 lb/pint	0.000	PINTS	0.420	0.000

Waste Parameters

Waste Parameter	Remaining Weight %	Actual Weight Lbs
Iron-based Metals/Alloys	0.000	0.000
Aluminum-based Metals/Alloys	0.000	0.000
Other metals	0.000	0.000
Other Inorganic Materials	0.000	5.000
Vitrified	0.000	0.000
Cellulosics	0.000	0.000
Rubber	0.000	0.000
Plastic (Waste Materials)	0.000	0.000
Inorganic matrix	100.000	658.090
Organic matrix	0.000	0.000
Cement (Solidified)	0.000	0.000
Soils/gravel	0.000	0.000
Steel (packaging materials)	0.000	59.000
Plastic (packaging materials)	0.000	21.000

Esignature History

Esig Approval Id	User Id	Esignature Date	Comment
8010	GPETERSEN	06-NOV-2003 13:39	

005

AMWTP Advanced Mixed Waste Treatment Project

BNFL, Inc.

RTR Analysis Report

Date: 26-Nov-2003

Time: 07:11

Batch Id RTR03-00066 **Container Id** 10001227 **Analysis Id** 0000001312

Container Type A **Analysis Status** Pass

RTR Date 06-NOV-2003 13:15 **Gross Weight in lbs.** 632.84 **Net Weight in lbs.** 552.84

Equipment Z-213-106 **Waste Matrix Code** S3150 **IDC** RF-004 Special Setups

Recording Id 2RTR03-00056 **Procedure Id** INST-OI-12-R **Revision** 15 **Approval Level** ITR

Is Test Pattern Resolution Ok? Yes **Start Side** A **Replicate** No

Audio Visual Ok? Yes **Closure Date** 03-NOV-1981 00:00 **Operator** GARY PETERSEN

Result Comment THIS IS A REWORK DRUM. THIS DRUM APPEARS TO BE SLUDGE, ONE DRUM BAG, ONE O-RING BAG, NO PROHIBITED ITEMS. GDP 11-06-03

Package

IDC Correct Yes **Recommended IDC** **Summary Category Code** S3000

Idc Change Reason

Liner Present? Yes **LinerType** TYPE 2

LinerPunctured? Yes **Sharp Objects Are Protected?** Yes

Fill Factor 95 **LayersOfPacking** 2

Bag Closure Method Twisted and Taped

Liquids

Liquid Present? No **Over One Inch of Liquid** No

Comment

Total Liquid Amount 0 pints **Liquid Between Liner and Drum** 0 pints

Liquid in Bags 0 pints **Containerized Liquid** 0 pints

Contents-Drum or Box

	Value	Comment		Value	Comment
Lead?	No		Mercury Present?	No	
Batteries?	No		Explosives?	No	
Compressed Gases?	No		PCBs Present?	No	
Non-Mixed Hazardous Waste Present?	No		Sealed Containers Over 4L?	No	

Non-Radionuclide Pyrophoric Materials Present? No

Waste exhibiting the characteristics of Ignitability, Corrosivity or Reactivity Present? No

Wastes Incompatible with backfill, seal and panel closure materials, container and packaging materials,shipping container or other wastes? No

Waste Material Items

Packaging Materials

Material Item	Quantity	Unit	Unit Wt(lbs)	Item Wt(lbs)
90 mil liner	1.000	EACH	16.000	16.000
Drum plastic bag	1.000	EACH	1.000	1.000
Box plastic liner	0.000	EACH	5.000	0.000
O-ring plastic bag in sludge, organic setups, etc.	1.000	EACH	4.000	4.000

Waste Items by Weight

Material Item	Quantity	Unit	Unit Wt(lbs)	Item Wt(lbs)
Cardboard liner (graphite mold waste)	0.000	EACH	4.000	0.000
Fiber pack	0.000	EACH	6.000	0.000
Box fiberboard liner	0.000	EACH	15.000	0.000
55-GAL DRUM (17c)	0.000	EACH	59.000	0.000
Plastic bag for waste	0.000	EACH	0.250	0.000
Lead brick 2 x 4 x 8 in.	0.000	EACH	25.000	0.000
Leaded rubber glove	0.000	EACH	5.500	0.000
Leaded rubber apron	0.000	EACH	5.250	0.000
Drum lead-liner (1/8"x28"x72")(.4lb/in.cubed)	0.000	EACH	100.000	0.000
Drum lead-liner (1/16"x28"x72")	0.000	EACH	50.000	0.000
Poly bottles (1 gal)	0.000	EACH	1.000	0.000
Metal can	0.000	EACH	0.500	0.000

006

AMWTP
Advanced Mixed Waste Treatment Project

BNFL, Inc.

RTR Analysis Report

Date: 26-Nov-2003

Time: 07:11

Batch Id RTR03-00066 **Container Id** 10001227 **Analysis Id** 0000001312

Waste Items by Volume

Material Item	Quantity	Unit	Unit Wt(lbs)	Item Wt(lbs)
Vermiculite (95 gm/liter) .125 lb/pint	0.000	PINTS	0.125	0.000
Oil-Dri (404 gm/liter) 0.42 lb/pint	0.000	PINTS	0.420	0.000

Waste Parameters

Waste Parameter	Remaining Weight %	Actual Weight Lbs
Iron-based Metals/Alloys	0.000	0.000
Aluminum-based Metals/Alloys	0.000	0.000
Other metals	0.000	0.000
Other Inorganic Materials	0.000	0.000
Vitrified	0.000	0.000
Cellulosics	0.000	0.000
Rubber	0.000	0.000
Plastic (Waste Materials)	0.000	0.000
Inorganic matrix	100.000	552.840
Organic matrix	0.000	0.000
Cement (Solidified)	0.000	0.000
Soils/gravel	0.000	0.000
Steel (packaging materials)	0.000	59.000
Plastic (packaging materials)	0.000	21.000

Esignature History

Esig Approval Id	User Id	Esignature Date	Comment
8003	GPETERSEN	06-NOV-2003 13:15	

AMWTP
Advanced Mixed Waste Treatment Project

BNFL, Inc.

RTR Analysis Report

Date: 26-Nov-2003

Time: 07:11

Batch Id RTR03-00066 **Container Id** 10001228 **Analysis Id** 0000001314

Container Type A **Analysis Status** Pass

RTR Date 06-NOV-2003 14:38 **Gross Weight in lbs.** 707.81 **Net Weight in lbs.** 627.81

Equipment Z-213-106 **Waste Matrix Code** S3150 **IDC** RF-004 Special Setups

Recording Id 2RTR03-00056 **Procedure Id** INST-OI-12-R **Revision** 15 **Approval Level** ITR

Is Test Pattern Resolution Ok? Yes **Start Side** A **Replicate** No

Audio Visual Ok? Yes **Closure Date** 09-MAR-1983 00:00 **Operator** GARY PETERSEN

Result Comment TRAVIS THOMPSON TRAINING WITH OPERATOR GARY PETERSEN. THIS IS A REWORK DRUM. THIS DRUM APPEARS TO BE SLUDGE, ONE DRUM BAG, ONE O-RING BAG, 5 GAL. OF VERMICULITE ON TOP OF THE BAGGING AND NO PROHIBITED ITEMS. GDP 11-06-03

Package

IDC Correct Yes **Recommended IDC** **Summary Category Code** S3000

Idc Change Reason

Liner Present? Yes **LinerType** TYPE 2

LinerPunctured? Yes **Sharp Objects Are Protected?** Yes

Fill Factor 95 **LayersOfPacking** 2

Bag Closure Method Twisted and Taped

Liquids

Liquid Present? No **Over One Inch of Liquid** No

Comment

Total Liquid Amount 0 pints **Liquid Between Liner and Drum** 0 pints

Liquid in Bags 0 pints **Containerized Liquid** 0 pints

Contents-Drum or Box

	Value	Comment		Value	Comment
Lead?	No		Mercury Present?	No	
Batteries?	No		Explosives?	No	
Compressed Gases?	No		PCBs Present?	No	
Non-Mixed Hazardous Waste Present?	No		Sealed Containers Over 4L?	No	

Non-Radionuclide Pyrophoric Materials Present? No

Waste exhibiting the characteristics of Ignitability, Corrosivity or Reactivity Present? No

Wastes Incompatible with backfill, seal and panel closure materials, container and packaging materials,shipping container or other wastes? No

Waste Material Items

Packaging Materials

Material Item	Quantity	Unit	Unit Wt(lbs)	Item Wt(lbs)
90 mil liner	1.000	EACH	16.000	16.000
Drum plastic bag	1.000	EACH	1.000	1.000
Box plastic liner	0.000	EACH	5.000	0.000
O-ring plastic bag in sludge, organic setups, etc.	1.000	EACH	4.000	4.000

Waste Items by Weight

Material Item	Quantity	Unit	Unit Wt(lbs)	Item Wt(lbs)
Cardboard liner (graphite mold waste)	0.000	EACH	4.000	0.000
Fiber pack	0.000	EACH	6.000	0.000
Box fiberboard liner	0.000	EACH	15.000	0.000
55-GAL DRUM (17c)	0.000	EACH	59.000	0.000
Plastic bag for waste	0.000	EACH	0.250	0.000
Lead brick 2 x 4 x 8 in.	0.000	EACH	25.000	0.000
Leaded rubber glove	0.000	EACH	5.500	0.000
Leaded rubber apron	0.000	EACH	5.250	0.000
Drum lead-liner (1/8"x28"x72")(.4lb/in.cubed)	0.000	EACH	100.000	0.000
Drum lead-liner (1/16"x28"x72")	0.000	EACH	50.000	0.000
Poly bottles (1 gal)	0.000	EACH	1.000	0.000
Metal can	0.000	EACH	0.500	0.000

AMWTP
Advanced Mixed Waste Treatment Project

BNFL, Inc.

RTR Analysis Report

Date: 26-Nov-2003

Time: 07:11

Batch Id RTR03-00066 **Container Id** 10001228 **Analysis Id** 0000001314

Waste Items by Volume

Material Item	Quantity	Unit	Unit Wt(lbs)	Item Wt(lbs)
Vermiculite (95 gm/liter) .125 lb/pint	40.000	PINTS	0.125	5.000
Oil-Dri (404 gm/liter) 0.42 lb/pint	0.000	PINTS	0.420	0.000

Waste Parameters

Waste Parameter	Remaining Weight %	Actual Weight Lbs
Iron-based Metals/Alloys	0.000	0.000
Aluminum-based Metals/Alloys	0.000	0.000
Other metals	0.000	0.000
Other Inorganic Materials	0.000	5.000
Vitrified	0.000	0.000
Cellulosics	0.000	0.000
Rubber	0.000	0.000
Plastic (Waste Materials)	0.000	0.000
Inorganic matrix	100.000	622.810
Organic matrix	0.000	0.000
Cement (Solidified)	0.000	0.000
Soils/gravel	0.000	0.000
Steel (packaging materials)	0.000	59.000
Plastic (packaging materials)	0.000	21.000

Esignature History

Esig Approval Id	User Id	Esignature Date	Comment
8027	GPETERSEN	06-NOV-2003 14:38	

009

AMWTP
Advanced Mixed Waste Treatment Project

BNFL, Inc.

RTR Analysis Report

Date: 01-Dec-2003

Time: 21:20

Batch Id RTR03-00066 **Container Id** 10001230 **Analysis Id** 0000001292

Container Type A **Analysis Status** Pass

RTR Date 05-NOV-2003 14:08 **Gross Weight in lbs.** 332.96 **Net Weight in lbs.** 252.96

Equipment Z-213-106 **Waste Matrix Code** S3150 **IDC** RF-004 Special Setups

Recording Id 2RTR03-00055 **Procedure Id** INST-OI-12-R **Revision** 15 **Approval Level** ITR

Is Test Pattern Resolution Ok? Yes **Start Side** A **Replicate** No

Audio Visual Ok? Yes **Closure Date** 04-MAY-1981 00:00 **Operator** DENISE LEE

Result Comment This drum contains sludge, metal rod, oil dri, poly bag, drum bag and o-ring bag. DKL 11/5/03 Rework to correct the layers of containment to 3 layers. DKL 11/28/03

Package

IDC Correct Yes **Recommended IDC** **Summary Category Code** S3000

Idc Change Reason

Liner Present? Yes **LinerType** TYPE 2

LinerPunctured? Yes **Sharp Objects Are Protected?** Yes

Fill Factor 60 **LayersOfPacking** 3

Bag Closure Method Twisted and Taped

Liquids

Liquid Present? No **Over One Inch of Liquid** No

Comment

Total Liquid Amount 0 pints **Liquid Between Liner and Drum** 0 pints

Liquid in Bags 0 pints **Containerized Liquid** 0 pints

Contents-Drum or Box

	Value	Comment		Value	Comment
Lead?	No		Mercury Present?	No	
Batteries?	No		Explosives?	No	
Compressed Gases?	No		PCBs Present?	No	
Non-Mixed Hazardous Waste Present?	No		Sealed Containers Over 4L?	No	

Non-Radionuclide Pyrophoric Materials Present? No

Waste exhibiting the characteristics of Ignitability, Corrosivity or Reactivity Present? No

Wastes Incompatible with backfill, seal and panel closure materials, container and packaging materials,shipping container or other wastes? No

Waste Material Items

Packaging Materials

Material Item	Quantity	Unit	Unit Wt(lbs)	Item Wt(lbs)
90 mil liner	1.000	EACH	16.000	16.000
Drum plastic bag	1.000	EACH	1.000	1.000
Box plastic liner	0.000	EACH	5.000	0.000
O-ring plastic bag in sludge, organic setups, etc.	1.000	EACH	4.000	4.000

Waste Items by Weight

Material Item	Quantity	Unit	Unit Wt(lbs)	Item Wt(lbs)
Metal Rod	1.000	EACH	1.000	1.000
Cardboard liner (graphite mold waste)	0.000	EACH	4.000	0.000
Fiber pack	0.000	EACH	6.000	0.000
Box fiberboard liner	0.000	EACH	15.000	0.000
55-GAL DRUM (17c)	0.000	EACH	59.000	0.000
Plastic bag for waste	1.000	EACH	0.250	0.250
Lead brick 2 x 4 x 8 in.	0.000	EACH	25.000	0.000
Leaded rubber glove	0.000	EACH	5.500	0.000
Leaded rubber apron	0.000	EACH	5.250	0.000
Drum lead-liner (1/8"x28"x72")(.4lb/in.cubed)	0.000	EACH	100.000	0.000
Drum lead-liner (1/16"x28"x72")	0.000	EACH	50.000	0.000
Poly bottles (1 gal)	0.000	EACH	1.000	0.000

AMWTP
Advanced Mixed Waste Treatment Project

BNFL, Inc.

RTR Analysis Report

Date: 26-Nov-2003

Time: 07:11

SUPERCEDED ERN 12-17-03

Batch Id RTR03-00066 **Container Id** 10001230 **Analysis Id** 0000001292

Container Type A **Analysis Status** Pass

RTR Date 05-NOV-2003 14:08 **Gross Weight in lbs.** 332.96 **Net Weight in lbs.** 252.96

Equipment Z-213-106 **Waste Matrix Code** S3150 **IDC** RF-004 Special Setups

Recording Id 2RTR03-00055 **Procedure Id** INST-OI-12-R **Revision** 15 **Approval Level** ITR

Is Test Pattern Resolution Ok? Yes **Start Side** A **Replicate** No

Audio Visual Ok? Yes **Closure Date** 04-MAY-1981 00:00 **Operator** DENISE LEE

Result Comment This drum contains sludge, metal rod, oil dri, poly bag, drum bag and o-ring bag. DKL 11/5/03

Package

IDC Correct Yes **Recommended IDC** **Summary Category Code** S3000

Idc Change Reason

Liner Present? Yes **LinerType** TYPE 2

LinerPunctured? Yes **Sharp Objects Are Protected?** Yes

Fill Factor 60 **LayersOfPacking** 2

Bag Closure Method Twisted and Taped

Liquids

Liquid Present? No **Over One Inch of Liquid** No

Comment

Total Liquid Amount 0 pints **Liquid Between Liner and Drum** 0 pints

Liquid in Bags 0 pints **Containerized Liquid** 0 pints

Contents-Drum or Box

	Value	Comment		Value	Comment
Lead?	No		Mercury Present?	No	
Batteries?	No		Explosives?	No	
Compressed Gases?	No		PCBs Present?	No	
Non-Mixed Hazardous Waste Present?	No		Sealed Containers Over 4L?	No	

Non-Radionuclide Pyrophoric Materials Present? No

Waste exhibiting the characteristics of Ignitability, Corrosivity or Reactivity Present? No

Wastes Incompatible with backfill, seal and panel closure materials, container and packaging materials,shipping container or other wastes? No

Waste Material Items

Packaging Materials

Material Item	Quantity	Unit	Unit Wt(lbs)	Item Wt(lbs)
90 mil liner	1.000	EACH	16.000	16.000
Drum plastic bag	1.000	EACH	1.000	1.000
Box plastic liner	0.000	EACH	5.000	0.000
O-ring plastic bag in sludge, organic setups, etc.	1.000	EACH	4.000	4.000

Waste Items by Weight

Material Item	Quantity	Unit	Unit Wt(lbs)	Item Wt(lbs)
Metal Rod	1.000	EACH	1.000	1.000
Cardboard liner (graphite mold waste)	0.000	EACH	4.000	0.000
Fiber pack	0.000	EACH	6.000	0.000
Box fiberboard liner	0.000	EACH	15.000	0.000
55-GAL DRUM (17c)	0.000	EACH	59.000	0.000
Plastic bag for waste	1.000	EACH	0.250	0.250
Lead brick 2 x 4 x 8 in.	0.000	EACH	25.000	0.000
Leaded rubber glove	0.000	EACH	5.500	0.000
Leaded rubber apron	0.000	EACH	5.250	0.000
Drum lead-liner (1/8"x28"x72")(.4lb/in.cubed)	0.000	EACH	100.000	0.000
Drum lead-liner (1/16"x28"x72")	0.000	EACH	50.000	0.000
Poly bottles (1 gal)	0.000	EACH	1.000	0.000
Metal can	0.000	EACH	0.500	0.000

SUPERCEDED ERN 12-17-03

010

Batch Id RTR03-00066 **Container Id** 10001230 **Analysis Id** 0000001292

Metal can	0.000	EACH	0.500	0.000

Waste Items by Volume

Material Item	Quantity	Unit	Unit Wt(lbs)	Item Wt(lbs)
Vermiculite (95 gm/liter) .125 lb/pint	0.000	PINTS	0.125	0.000
Oil-Dri (404 gm/liter) 0.42 lb/pint	4.000	PINTS	0.420	1.680

Waste Parameters

Waste Parameter	Remaining Weight %	Actual Weight Lbs
Iron-based Metals/Alloys	0.000	0.000
Aluminum-based Metals/Alloys	0.000	0.000
Other metals	0.000	1.000
Other Inorganic Materials	0.000	1.680
Vitrified	0.000	0.000
Cellulosics	0.000	0.000
Rubber	0.000	0.000
Plastic (Waste Materials)	0.000	0.250
Inorganic matrix	100.000	250.030
Organic matrix	0.000	0.000
Cement (Solidified)	0.000	0.000
Soils/gravel	0.000	0.000
Steel (packaging materials)	0.000	59.000
Plastic (packaging materials)	0.000	21.000

Esignature History

Esig Approval Id	User Id	Esignature Date	Comment
10683	DLEE	28-NOV-2003 22:50	Rework complete. DKL 11/28/03
7902	DLEE	05-NOV-2003 14:08	

011

AMWTP
Advanced Mixed Waste Treatment Project

BNFL, Inc.

RTR Analysis Report

Date: 26-Nov-2003

Time: 07:11

SUPERCEDED ERW 12-17-03

Batch Id RTR03-00066 **Container Id** 10001230 **Analysis Id** 0000001292

Waste Items by Volume

Material Item	Quantity	Unit	Unit Wt(lbs)	Item Wt(lbs)
Vermiculite (95 gm/liter) .125 lb/pint	0.000	PINTS	0.125	0.000
Oil-Dri (404 gm/liter) 0.42 lb/pint	4.000	PINTS	0.420	1.680

Waste Parameters

Waste Parameter	Remaining Weight %	Actual Weight Lbs
Iron-based Metals/Alloys	0.000	0.000
Aluminum-based Metals/Alloys	0.000	0.000
Other metals	0.000	1.000
Other Inorganic Materials	0.000	1.680
Vitrified	0.000	0.000
Cellulosics	0.000	0.000
Rubber	0.000	0.000
Plastic (Waste Materials)	0.000	0.250
Inorganic matrix	100.000	250.030
Organic matrix	0.000	0.000
Cement (Solidified)	0.000	0.000
Soils/gravel	0.000	0.000
Steel (packaging materials)	0.000	59.000
Plastic (packaging materials)	0.000	21.000

Esignature History

Esig Approval Id	User Id	Esignature Date	Comment
7902	DLEE	05-NOV-2003 14:08	

011 SUPERCEDED 12-17-03 ERW

AMWTP Advanced Mixed Waste Treatment Project

BNFL, Inc.

RTR Analysis Report

Date: 01-Dec-2003

Time: 21:20

Batch Id RTR03-00066 **Container Id** 10001233 **Analysis Id** 0000001307

Container Type A **Analysis Status** Pass

RTR Date 06-NOV-2003 09:29 **Gross Weight in lbs.** 608.58 **Net Weight in lbs.** 528.58

Equipment Z-213-106 **Waste Matrix Code** S3150 **IDC** RF-004 Special Setups

Recording Id 2RTR03-00055 **Procedure Id** INST-OI-12-R **Revision** 15 **Approval Level** ITR

Is Test Pattern Resolution Ok? Yes **Start Side** B **Replicate** No

Audio Visual Ok? Yes **Closure Date** 08-OCT-1981 00:00 **Operator** GARY PETERSEN

Result Comment THIS IS A REWORK DRUM. THIS DRUM APPEARS TO BE SLUDGE, ONE DRUM BAG, ONE O-RING BAG, AND APROX. 3 GALLONS VERMICULITE. NO PROHIBITED ITEMS. GDP 11-06-03 { AFTER REVIEW OF THE RECORDING,FOR REWORK, THE VERMICULITE THAT I CALLED OUT WAS ACTUALLY PART OF THE WASTE } GDP 11-28-03

Package

IDC Correct Yes **Recommended IDC** **Summary Category Code** S3000

Idc Change Reason

Liner Present? Yes **LinerType** TYPE 2

LinerPunctured? Yes **Sharp Objects Are Protected?** Yes

Fill Factor 85 **LayersOfPacking** 2

Bag Closure Method Twisted and Taped

Liquids

Liquid Present? No **Over One Inch of Liquid** No

Comment

Total Liquid Amount 0 pints **Liquid Between Liner and Drum** 0 pints

Liquid in Bags 0 pints **Containerized Liquid** 0 pints

Contents-Drum or Box

	Value	Comment		Value	Comment
Lead?	No		Mercury Present?	No	
Batteries?	No		Explosives?	No	
Compressed Gases?	No		PCBs Present?	No	
Non-Mixed Hazardous Waste Present?	No		Sealed Containers Over 4L?	No	

Non-Radionuclide Pyrophoric Materials Present? No

Waste exhibiting the characteristics of Ignitability, Corrosivity or Reactivity Present? No

Wastes Incompatible with backfill, seal and panel closure materials, container and packaging materials,shipping container or other wastes? No

Waste Material Items

Packaging Materials

Material Item	Quantity	Unit	Unit Wt(lbs)	Item Wt(lbs)
90 mil liner	1.000	EACH	16.000	16.000
Drum plastic bag	1.000	EACH	1.000	1.000
Box plastic liner	0.000	EACH	5.000	0.000
O-ring plastic bag in sludge, organic setups, etc.	1.000	EACH	4.000	4.000

Waste Items by Weight

Material Item	Quantity	Unit	Unit Wt(lbs)	Item Wt(lbs)
Cardboard liner (graphite mold waste)	0.000	EACH	4.000	0.000
Fiber pack	0.000	EACH	6.000	0.000
Box fiberboard liner	0.000	EACH	15.000	0.000
55-GAL DRUM (17c)	0.000	EACH	59.000	0.000
Plastic bag for waste	0.000	EACH	0.250	0.000
Lead brick 2 x 4 x 8 in.	0.000	EACH	25.000	0.000
Leaded rubber glove	0.000	EACH	5.500	0.000
Leaded rubber apron	0.000	EACH	5.250	0.000
Drum lead-liner (1/8"x28"x72")(.4lb/in.cubed)	0.000	EACH	100.000	0.000
Drum lead-liner (1/16"x28"x72")	0.000	EACH	50.000	0.000
Poly bottles (1 gal)	0.000	EACH	1.000	0.000

AMWTP
Advanced Mixed Waste Treatment Project

BNFL, Inc.

RTR Analysis Report

Date: 26-Nov-2003

Time: 07:11

SUPERCEDED ERN 12-17-03

Batch Id RTR03-00066 **Container Id** 10001233 **Analysis Id** 0000001307

Container Type A **Analysis Status** Pass

RTR Date 06-NOV-2003 09:29 **Gross Weight in lbs.** 608.58 **Net Weight in lbs.** 528.58

Equipment Z-213-106 **Waste Matrix Code** S3150 **IDC** RF-004 Special Setups

Recording Id 2RTR03-00055 **Procedure Id** INST-OI-12-R **Revision** 15 **Approval Level** ITR

Is Test Pattern Resolution Ok? Yes **Start Side** B **Replicate** No

Audio Visual Ok? Yes **Closure Date** 08-OCT-1981 00:00 **Operator** GARY PETERSEN

Result Comment THIS IS A REWORK DRUM. THIS DRUM APPEARS TO BE SLUDGE, ONE DRUM BAG, ONE O-RING BAG, AND APROX. 3 GALLONS VERMICULITE. NO PROHIBITED ITEMS. GDP 11-06-03

Package

IDC Correct Yes **Recommended IDC** **Summary Category Code** S3000

Idc Change Reason

Liner Present? Yes **LinerType** TYPE 2

LinerPunctured? Yes **Sharp Objects Are Protected?** Yes

Fill Factor 85 **LayersOfPacking** 2

Bag Closure Method Twisted and Taped

Liquids

Liquid Present? No **Over One Inch of Liquid** No

Comment

Total Liquid Amount 0 pints **Liquid Between Liner and Drum** 0 pints

Liquid in Bags 0 pints **Containerized Liquid** 0 pints

Contents-Drum or Box

	Value	Comment		Value	Comment
Lead?	No		Mercury Present?	No	
Batteries?	No		Explosives?	No	
Compressed Gases?	No		PCBs Present?	No	
Non-Mixed Hazardous Waste Present?	No		Sealed Containers Over 4L?	No	

Non-Radionuclide Pyrophoric Materials Present? No

Waste exhibiting the characteristics of Ignitability, Corrosivity or Reactivity Present? No

Wastes Incompatible with backfill, seal and panel closure materials, container and packaging materials,shipping container or other wastes? No

Waste Material Items

Packaging Materials

Material Item	Quantity	Unit	Unit Wt(lbs)	Item Wt(lbs)
90 mil liner	1.000	EACH	16.000	16.000
Drum plastic bag	1.000	EACH	1.000	1.000
Box plastic liner	0.000	EACH	5.000	0.000
O-ring plastic bag in sludge, organic setups, etc.	1.000	EACH	4.000	4.000

Waste Items by Weight

Material Item	Quantity	Unit	Unit Wt(lbs)	Item Wt(lbs)
Cardboard liner (graphite mold waste)	0.000	EACH	4.000	0.000
Fiber pack	0.000	EACH	6.000	0.000
Box fiberboard liner	0.000	EACH	15.000	0.000
55-GAL DRUM (17c)	0.000	EACH	59.000	0.000
Plastic bag for waste	0.000	EACH	0.250	0.000
Lead brick 2 x 4 x 8 in.	0.000	EACH	25.000	0.000
Leaded rubber glove	0.000	EACH	5.500	0.000
Leaded rubber apron	0.000	EACH	5.250	0.000
Drum lead-liner (1/8"x28"x72")(.4lb/in.cubed)	0.000	EACH	100.000	0.000
Drum lead-liner (1/16"x28"x72")	0.000	EACH	50.000	0.000
Poly bottles (1 gal)	0.000	EACH	1.000	0.000
Metal can	0.000	EACH	0.500	0.000

Q12 SUPERCEDED ERN 12-17-03

AMWTP
Advanced Mixed Waste Treatment Project

BNFL, Inc.

RTR Analysis Report

Date: 01-Dec-2003

Time: 21:20

Batch Id RTR03-00066	Container Id 10001233		Analysis Id 0000001307	
Metal can	0.000	EACH	0.500	0.000

Waste Items by Volume

Material Item	Quantity	Unit	Unit Wt(lbs)	Item Wt(lbs)
Vermiculite (95 gm/liter) .125 lb/pint	0.000	PINTS	0.125	0.000
Oil-Dri (404 gm/liter) 0.42 lb/pint	0.000	PINTS	0.420	0.000

Waste Parameters

Waste Parameter	Remaining Weight %	Actual Weight Lbs
Iron-based Metals/Alloys	0.000	0.000
Aluminum-based Metals/Alloys	0.000	0.000
Other metals	0.000	0.000
Other Inorganic Materials	0.000	0.000
Vitrified	0.000	0.000
Cellulosics	0.000	0.000
Rubber	0.000	0.000
Plastic (Waste Materials)	0.000	0.000
Inorganic matrix	100.000	528.580
Organic matrix	0.000	0.000
Cement (Solidified)	0.000	0.000
Soils/gravel	0.000	0.000
Steel (packaging materials)	0.000	59.000
Plastic (packaging materials)	0.000	21.000

Esignature History

Esig Approval Id	User Id	Esignature Date	Comment
10646	GPETERSEN	28-NOV-2003 14:46	ON REWORK I FORGOT TO REMOVE THE WEIGHT THAT I ASSIGNED TO VERMICULITE.
10643	GPETERSEN	28-NOV-2003 14:27	REWORK COMPLETE.
7958	GPETERSEN	06-NOV-2003 09:29	

013

AMWTP
Advanced Mixed Waste Treatment Project

BNFL, Inc.

RTR Analysis Report

Date: 26-Nov-2003

Time: 07:11

SUPERCEDED ERW 12-17-03

Batch Id RTR03-00066 **Container Id** 10001233 **Analysis Id** 0000001307

Waste Items by Volume

Material Item	Quantity	Unit	Unit Wt(lbs)	Item Wt(lbs)
Vermiculite (95 gm/liter) .125 lb/pint	24.000	PINTS	0.125	3.000
Oil-Dri (404 gm/liter) 0.42 lb/pint	0.000	PINTS	0.420	0.000

Waste Parameters

Waste Parameter	Remaining Weight %	Actual Weight Lbs
Iron-based Metals/Alloys	0.000	0.000
Aluminum-based Metals/Alloys	0.000	0.000
Other metals	0.000	0.000
Other Inorganic Materials	0.000	3.000
Vitrified	0.000	0.000
Cellulosics	0.000	0.000
Rubber	0.000	0.000
Plastic (Waste Materials)	0.000	0.000
Inorganic matrix	100.000	525.580
Organic matrix	0.000	0.000
Cement (Solidified)	0.000	0.000
Soils/gravel	0.000	0.000
Steel (packaging materials)	0.000	59.000
Plastic (packaging materials)	0.000	21.000

Esignature History

Esig Approval Id	User Id	Esignature Date	Comment
7958	GPETERSEN	06-NOV-2003 09:29	

013 SUPERCEDED ERW 12-17-03

AMWTP
Advanced Mixed Waste Treatment Project

BNFL, Inc.

RTR Analysis Report

Date: 26-Nov-2003

Time: 07:11

Batch Id RTR03-00066 **Container Id** 10001233 **Analysis Id** 0000001310

Container Type A **Analysis Status** Pass

RTR Date 06-NOV-2003 11:45 **Gross Weight in lbs.** 608.58 **Net Weight in lbs.** 528.58

Equipment Z-213-106 **Waste Matrix Code** S3150 **IDC** RF-004 Special Setups

Recording Id 2RTR03-00055 **Procedure Id** INST-OI-12-R **Revision** 15 **Approval Level** ITR

Is Test Pattern Resolution Ok? Yes **Start Side** B **Replicate** Yes

Audio Visual Ok? Yes **Closure Date** 08-OCT-1981 00:00 **Operator** SHAWN JORDAN

Result Comment THIS IS A REPLICATE EXAM . THIS DRUM IS A REWORK DRUM. THIS DRUM CONTAINS A DRUM BAG, A O-RING BAG.THE REST OF THE WASTE APPEARS TO BE SLUDGE. NO PROHIBITED ITEMS FOUND. SJ 11-06-03

Package

IDC Correct Yes **Recommended IDC** **Summary Category Code** S3000

Idc Change Reason

Liner Present? Yes **LinerType** TYPE 2

LinerPunctured? Yes **Sharp Objects Are Protected?** Yes

Fill Factor 85 **LayersOfPacking** 2

Bag Closure Method Twisted and Taped

Liquids

Liquid Present? No **Over One Inch of Liquid** No

Comment

Total Liquid Amount 0 pints **Liquid Between Liner and Drum** 0 pints

Liquid in Bags 0 pints **Containerized Liquid** 0 pints

Contents-Drum or Box

	Value	Comment		Value	Comment
Lead?	No		Mercury Present?	No	
Batteries?	No		Explosives?	No	
Compressed Gases?	No		PCBs Present?	No	
Non-Mixed Hazardous Waste Present?	No		Sealed Containers Over 4L?	No	

Non-Radionuclide Pyrophoric Materials Present? No

Waste exhibiting the characteristics of Ignitability, Corrosivity or Reactivity Present? No

Wastes Incompatible with backfill, seal and panel closure materials, container and packaging materials,shipping container or other wastes? No

Waste Material Items

Packaging Materials

Material Item	Quantity	Unit	Unit Wt(lbs)	Item Wt(lbs)
90 mil liner	1.000	EACH	16.000	16.000
Drum plastic bag	1.000	EACH	1.000	1.000
Box plastic liner	0.000	EACH	5.000	0.000
O-ring plastic bag in sludge, organic setups, etc.	1.000	EACH	4.000	4.000

Waste Items by Weight

Material Item	Quantity	Unit	Unit Wt(lbs)	Item Wt(lbs)
Cardboard liner (graphite mold waste)	0.000	EACH	4.000	0.000
Fiber pack	0.000	EACH	6.000	0.000
Box fiberboard liner	0.000	EACH	15.000	0.000
55-GAL DRUM (17c)	0.000	EACH	59.000	0.000
Plastic bag for waste	0.000	EACH	0.250	0.000
Lead brick 2 x 4 x 8 in.	0.000	EACH	25.000	0.000
Leaded rubber glove	0.000	EACH	5.500	0.000
Leaded rubber apron	0.000	EACH	5.250	0.000
Drum lead-liner (1/8"x28"x72")(.4lb/in.cubed)	0.000	EACH	100.000	0.000
Drum lead-liner (1/16"x28"x72")	0.000	EACH	50.000	0.000
Poly bottles (1 gal)	0.000	EACH	1.000	0.000
Metal can	0.000	EACH	0.500	0.000

AMWTP
Advanced Mixed Waste Treatment Project

BNFL, Inc.

RTR Analysis Report

Date: 26-Nov-2003

Time: 07:11

Batch Id RTR03-00066 **Container Id** 10001233 **Analysis Id** 0000001310

Waste Items by Volume

Material Item	Quantity	Unit	Unit Wt(lbs)	Item Wt(lbs)
Vermiculite (95 gm/liter) .125 lb/pint	0.000	PINTS	0.125	0.000
Oil-Dri (404 gm/liter) 0.42 lb/pint	0.000	PINTS	0.420	0.000

Waste Parameters

Waste Parameter	Remaining Weight %	Actual Weight Lbs
Iron-based Metals/Alloys	0.000	0.000
Aluminum-based Metals/Alloys	0.000	0.000
Other metals	0.000	0.000
Other Inorganic Materials	0.000	0.000
Vitrified	0.000	0.000
Cellulosics	0.000	0.000
Rubber	0.000	0.000
Plastic (Waste Materials)	0.000	0.000
Inorganic matrix	100.000	528.580
Organic matrix	0.000	0.000
Cement (Solidified)	0.000	0.000
Soils/gravel	0.000	0.000
Steel (packaging materials)	0.000	59.000
Plastic (packaging materials)	0.000	21.000

Esignature History

Esig Approval Id	User Id	Esignature Date	Comment
7997	SJORDAN	06-NOV-2003 11:45	

015

AMWTP
Advanced Mixed Waste Treatment Project

BNFL, Inc.

RTR Analysis Report

Date: 26-Nov-2003

Time: 07:11

Batch Id RTR03-00066 **Container Id** 10001237 **Analysis Id** 0000001315

Container Type A **Analysis Status** Pass

RTR Date 06-NOV-2003 15:15 **Gross Weight in lbs.** 582.12 **Net Weight in lbs.** 506.12

Equipment Z-213-106 **Waste Matrix Code** S3150 **IDC** RF-004 Special Setups

Recording Id 2RTR03-00056 **Procedure Id** INST-OI-12-R **Revision** 15 **Approval Level** ITR

Is Test Pattern Resolution Ok? Yes **Start Side** A **Replicate** No

Audio Visual Ok? Yes **Closure Date** 23-OCT-1981 00:00 **Operator** SHAWN JORDAN

Result Comment THIS IS A REWORK DRUM. THIS DRUM APPEARS TO BE SLUDGE, ONE DRUM BAG, TWO CUP OF OIL DRI, AND NO PROHIBITED ITEMS. SJ 11-06-03

Package

IDC Correct Yes **Recommended IDC** **Summary Category Code** S3000

Idc Change Reason

Liner Present? Yes **LinerType** TYPE 2

LinerPunctured? Yes **Sharp Objects Are Protected?** Yes

Fill Factor 85 **LayersOfPacking** 1

Bag Closure Method Twisted and Taped

Liquids

Liquid Present? No **Over One Inch of Liquid** No

Comment

Total Liquid Amount 0 pints **Liquid Between Liner and Drum** 0 pints

Liquid in Bags 0 pints **Containerized Liquid** 0 pints

Contents-Drum or Box

	Value	Comment		Value	Comment
Lead?	No		**Mercury Present?**	No	
Batteries?	No		**Explosives?**	No	
Compressed Gases?	No		**PCBs Present?**	No	
Non-Mixed Hazardous Waste Present?	No		**Sealed Containers Over 4L?**	No	

Non-Radionuclide Pyrophoric Materials Present? No

Waste exhibiting the characteristics of Ignitability, Corrosivity or Reactivity Present? No

Wastes incompatible with backfill, seal and panel closure materials, container and packaging materials,shipping contalner or other wastes? No

Waste Material Items

Packaging Materials

Material Item	Quantity	Unit	Unit Wt(lbs)	Item Wt(lbs)
90 mil liner	1.000	EACH	16.000	16.000
Drum plastic bag	1.000	EACH	1.000	1.000
Box plastic liner	0.000	EACH	5.000	0.000
O-ring plastic bag in sludge, organic setups, etc.	0.000	EACH	4.000	0.000

Waste Items by Weight

Material Item	Quantity	Unit	Unit Wt(lbs)	Item Wt(lbs)
Cardboard liner (graphite mold waste)	0.000	EACH	4.000	0.000
Fiber pack	0.000	EACH	6.000	0.000
Box fiberboard liner	0.000	EACH	15.000	0.000
55-GAL DRUM (17c)	0.000	EACH	59.000	0.000
Plastic bag for waste	0.000	EACH	0.250	0.000
Lead brick 2 x 4 x 8 in.	0.000	EACH	25.000	0.000
Leaded rubber glove	0.000	EACH	5.500	0.000
Leaded rubber apron	0.000	EACH	5.250	0.000
Drum lead-liner (1/8"x28"x72")(.4lb/in.cubed)	0.000	EACH	100.000	0.000
Drum lead-liner (1/16"x28"x72")	0.000	EACH	50.000	0.000
Poly bottles (1 gal)	0.000	EACH	1.000	0.000
Metal can	0.000	EACH	0.500	0.000

AMWTP
Advanced Mixed Waste Treatment Project

BNFL, Inc.

RTR Analysis Report

Date: 26-Nov-2003

Time: 07:11

Batch Id RTR03-00066 **Container Id** 10001237 **Analysis Id** 0000001315

Waste Items by Volume

Material Item	Quantity	Unit	Unit Wt(lbs)	Item Wt(lbs)
Vermiculite (95 gm/liter) .125 lb/pint	0.000	PINTS	0.125	0.000
Oil-Dri (404 gm/liter) 0.42 lb/pint	1.000	PINTS	0.420	0.420

Waste Parameters

Waste Parameter	Remaining Weight %	Actual Weight Lbs
Iron-based Metals/Alloys	0.000	0.000
Aluminum-based Metals/Alloys	0.000	0.000
Other metals	0.000	0.000
Other Inorganic Materials	0.000	0.420
Vitrified	0.000	0.000
Cellulosics	0.000	0.000
Rubber	0.000	0.000
Plastic (Waste Materials)	0.000	0.000
Inorganic matrix	100.000	505.700
Organic matrix	0.000	0.000
Cement (Solidified)	0.000	0.000
Soils/gravel	0.000	0.000
Steel (packaging materials)	0.000	59.000
Plastic (packaging materials)	0.000	17.000

Esignature History

Esig Approval Id	User Id	Esignature Date	Comment
8044	SJORDAN	06-NOV-2003 15:15	

AMWTP
Advanced Mixed Waste Treatment Project

BNFL, Inc.

RTR Analysis Report

Date: 02-Feb-2004

Time: 15:34

Batch Id RTR03-00066	**Container Id** 10001238	**Analysis Id** 0000001308
Container Type A	**Analysis Status** Pass	
RTR Date 06-NOV-2003 10:12	**Gross Weight in lbs.** 626.22	**Net Weight in lbs.** 546.22
Equipment Z-213-106	**Waste Matrix Code** S3150	**IDC** RF-004 Special Setups
Recording Id 2RTR03-00055	**Procedure Id** INST-OI-12-R	**Revision** 15 **Approval Level** ITR
Is Test Pattern Resolution Ok? Yes	**Start Side** B	**Replicate** No
Audio Visual Ok? Yes	**Closure Date** 20-NOV-1981 00:00	**Operator** GARY PETERSEN

Result Comment THIS IS A REWORK DRUM. THIS DRUM APPEARS TO BE SLUDGE, ONE DRUM BAG , AND APROX. 3 GALLONS VERMICULITE. NO PROHIBITED ITEMS. GDP 11-06-03 {AFTER REVIEWING THIS DRUM,FOR REWORK,WHAT I HAD ORIGINALY CALLED OUT AS VERMICULITE,WAS ACTUALLY PART OF THE WASTE} GDP 11-28-03 FOR REWORK I AM ADDING A O-RING BAG TO MY COMMENTS. GDP 2-2-04

Package

IDC Correct Yes **Recommended IDC** **Summary Category Code** S3000

Idc Change Reason

Liner Present?	Yes	**LinerType**	TYPE 2
LinerPunctured?	Yes	**Sharp Objects Are Protected?**	Yes
Fill Factor	95	**LayersOfPacking**	2
Bag Closure Method	Twisted and Taped		

Liquids

Liquid Present?	No	**Over One Inch of Liquid**	No
Comment			
Total Liquid Amount	0 pints	**Liquid Between Liner and Drum**	0 pints
Liquid in Bags	0 pints	**Containerized Liquid**	0 pints

Contents-Drum or Box

	Value	*Comment*		*Value*	*Comment*
Lead?	No		**Mercury Present?**	No	
Batteries?	No		**Explosives?**	No	
Compressed Gases?	No		**PCBs Present?**	No	
Non-Mixed Hazardous Waste Present?	No		**Sealed Containers Over 4L?**	No	

Non-Radionuclide Pyrophoric Materials Present? No

Waste exhibiting the characteristics of Ignitability, Corrosivity or Reactivity Present? No

Wastes Incompatible with backfill, seal and panel closure materials, container and packaging materials,shipping container or other wastes? No

Waste Material Items

Packaging Materials

Material Item	Quantity	Unit	Unit Wt(lbs)	Item Wt(lbs)
90 mil liner	1.000	EACH	16.000	16.000
Drum plastic bag	1.000	EACH	1.000	1.000
Box plastic liner	0.000	EACH	5.000	0.000
O-ring plastic bag in sludge, organic setups, etc.	1.000	EACH	4.000	4.000
Drum Stub Bag (Plastic Packaging)	0.000	EACH	2.000	0.000

Waste Items by Weight

Material Item	Quantity	Unit	Unit Wt(lbs)	Item Wt(lbs)
Cardboard liner (graphite mold waste)	0.000	EACH	4.000	0.000
Fiber pack	0.000	EACH	6.000	0.000
Box fiberboard liner	0.000	EACH	15.000	0.000
55-GAL DRUM (17c)	0.000	EACH	59.000	0.000
Plastic bag for waste	0.000	EACH	0.250	0.000
Lead brick 2 x 4 x 8 in.	0.000	EACH	25.000	0.000
Leaded rubber glove	0.000	EACH	5.500	0.000
Leaded rubber apron	0.000	EACH	5.250	0.000
Drum lead-liner (1/8"x28"x72")(.4lb/in.cubed)	0.000	EACH	100.000	0.000

AMWTP
Advanced Mixed Waste Treatment Project

BNFL, Inc.

RTR Analysis Report

Date: 01-Dec-2003

Time: 21:20

SUPERCEDED

Batch Id RTR03-00066	**Container Id** 10001238	**Analysis Id** 0000001308
Container Type A	**Analysis Status** Pass	
RTR Date 06-NOV-2003 10:12	**Gross Weight in lbs.** 626.22	**Net Weight in lbs.** 546.22
Equipment Z-213-106	**Waste Matrix Code** S3150	**IDC** RF-004 Special Setups
Recording Id 2RTR03-00055	**Procedure Id** INST-OI-12-R	**Revision** 15 **Approval Level** ITR
Is Test Pattern Resolution Ok? Yes	**Start Side** B	**Replicate** No
Audio Visual Ok? Yes	**Closure Date** 20-NOV-1981 00:00	**Operator** GARY PETERSEN

Result Comment THIS IS A REWORK DRUM. THIS DRUM APPEARS TO BE SLUDGE, ONE DRUM BAG , AND APROX. 3 GALLONS VERMICULITE. NO PROHIBITED ITEMS. GDP 11-06-03
{AFTER REVIEWING THIS DRUM,FOR REWORK,WHAT I HAD ORIGINALY CALLED OUT AS VERMICULITE,WAS ACTUALLY PART OF THE WASTE} GDP 11-28-03

Package

IDC Correct Yes | **Recommended IDC** | **Summary Category Code** S3000

Idc Change Reason

Liner Present?	Yes	**LinerType**	TYPE 2
LinerPunctured?	Yes	**Sharp Objects Are Protected?**	Yes
Fill Factor	95	**LayersOfPacking**	2
Bag Closure Method	Twisted and Taped		

Liquids

Liquid Present?	No	**Over One Inch of Liquid**	No
Comment			
Total Liquid Amount	0 pints	**Liquid Between Liner and Drum**	0 pints
Liquid in Bags	0 pints	**Containerized Liquid**	0 pints

Contents-Drum or Box

	Value	Comment		Value	Comment
Lead?	No		**Mercury Present?**	No	
Batteries?	No		**Explosives?**	No	
Compressed Gases?	No		**PCBs Present?**	No	
Non-Mixed Hazardous Waste Present?	No		**Sealed Containers Over 4L?**	No	

Non-Radionuclide Pyrophoric Materials Present? No

Waste exhibiting the characteristics of Ignitability, Corrosivity or Reactivity Present? No

Wastes Incompatible with backfill, seal and panel closure materials, container and packaging materials,shipping container or other wastes? No

Waste Material Items

Packaging Materials

Material Item	Quantity	Unit	Unit Wt(lbs)	Item Wt(lbs)
90 mil liner	1.000	EACH	16.000	16.000
Drum plastic bag	1.000	EACH	1.000	1.000
Box plastic liner	0.000	EACH	5.000	0.000
O-ring plastic bag in sludge, organic setups, etc.	1.000	EACH	4.000	4.000

Waste Items by Weight

Material Item	Quantity	Unit	Unit Wt(lbs)	Item Wt(lbs)
Cardboard liner (graphite mold waste)	0.000	EACH	4.000	0.000
Fiber pack	0.000	EACH	6.000	0.000
Box fiberboard liner	0.000	EACH	15.000	0.000
55-GAL DRUM (17c)	0.000	EACH	59.000	0.000
Plastic bag for waste	0.000	EACH	0.250	0.000
Lead brick 2 x 4 x 8 in.	0.000	EACH	25.000	0.000
Leaded rubber glove	0.000	EACH	5.500	0.000
Leaded rubber apron	0.000	EACH	5.250	0.000
Drum lead-liner (1/8"x28"x72")(.4lb/in.cubed)	0.000	EACH	100.000	0.000
Drum lead-liner (1/16"x28"x72")	0.000	EACH	50.000	0.000
Poly bottles (1 gal)	0.000	EACH	1.000	0.000

2-2-04

018 SUPERCEDED RH 2-2-04

AMWTP
Advanced Mixed Waste Treatment Project

BNFL, Inc.

RTR Analysis Report

Date: 26-Nov-2003

Time: 07:11

SUPERCEDED ERW 12-17-03

Batch Id RTR03-00066 **Container Id** 10001238 **Analysis Id** 0000001308

Container Type A **Analysis Status** Pass

RTR Date 06-NOV-2003 10:12 **Gross Weight in lbs.** 626.22 **Net Weight in lbs.** 546.22

Equipment Z-213-106 **Waste Matrix Code** S3150 **IDC** RF-004 Special Setups

Recording Id 2RTR03-00055 **Procedure Id** INST-OI-12-R **Revision** 15 **Approval Level** ITR

Is Test Pattern Resolution Ok? Yes **Start Side** B **Replicate** No

Audio Visual Ok? Yes **Closure Date** 20-NOV-1981 00:00 **Operator** GARY PETERSEN

Result Comment THIS IS A REWORK DRUM. THIS DRUM APPEARS TO BE SLUDGE, ONE DRUM BAG, ONE O-RING BAG, AND APROX. 3 GALLONS VERMICULITE. NO PROHIBITED ITEMS. GDP 11-06-03

Package

IDC Correct Yes **Recommended IDC** **Summary Category Code** S3000

Idc Change Reason

Liner Present? Yes **LinerType** TYPE 2

LinerPunctured? Yes **Sharp Objects Are Protected?** Yes

Fill Factor 95 **LayersOfPacking** 2

Bag Closure Method Twisted and Taped

Liquids

Liquid Present? No **Over One Inch of Liquid** No

Comment

Total Liquid Amount 0 pints **Liquid Between Liner and Drum** 0 pints

Liquid in Bags 0 pints **Containerized Liquid** 0 pints

Contents-Drum or Box

	Value	Comment		Value	Comment
Lead?	No		Mercury Present?	No	
Batteries?	No		Explosives?	No	
Compressed Gases?	No		PCBs Present?	No	
Non-Mixed Hazardous Waste Present?	No		Sealed Containers Over 4L?	No	

Non-Radionuclide Pyrophoric Materials Present? No

Waste exhibiting the characteristics of Ignitability, Corrosivity or Reactivity Present? No

Wastes Incompatible with backfill, seal and panel closure materials, container and packaging materials,shipping container or other wastes? No

Waste Material Items

Packaging Materials

Material Item	Quantity	Unit	Unit Wt(lbs)	Item Wt(lbs)
90 mil liner	1.000	EACH	16.000	16.000
Drum plastic bag	1.000	EACH	1.000	1.000
Box plastic liner	0.000	EACH	5.000	0.000
O-ring plastic bag in sludge, organic setups, etc.	1.000	EACH	4.000	4.000

Waste Items by Weight

Material Item	Quantity	Unit	Unit Wt(lbs)	Item Wt(lbs)
Cardboard liner (graphite mold waste)	0.000	EACH	4.000	0.000
Fiber pack	0.000	EACH	6.000	0.000
Box fiberboard liner	0.000	EACH	15.000	0.000
55-GAL DRUM (17c)	0.000	EACH	59.000	0.000
Plastic bag for waste	0.000	EACH	0.250	0.000
Lead brick 2 x 4 x 8 in.	0.000	EACH	25.000	0.000
Leaded rubber glove	0.000	EACH	5.500	0.000
Leaded rubber apron	0.000	EACH	5.250	0.000
Drum lead-liner (1/8"x28"x72")(.4lb/in.cubed)	0.000	EACH	100.000	0.000
Drum lead-liner (1/16"x28"x72")	0.000	EACH	50.000	0.000
Poly bottles (1 gal)	0.000	EACH	1.000	0.000
Metal can	0.000	EACH	0.500	0.000

018

SUPERCEDED ERW 12-17-03

Batch Id RTR03-00066 **Container Id** 10001238 **Analysis Id** 0000001308

Drum lead-liner (1/16"x28"x72")	0.000	EACH	50.000	0.000
Poly bottles (1 gal)	0.000	EACH	1.000	0.000
Metal can	0.000	EACH	0.500	0.000
Drum Stub Bag (Plastic Waste)	0.000	EACH	2.000	0.000

Waste Items by Volume

Material Item	Quantity	Unit	Unit Wt(lbs)	Item Wt(lbs)
Vermiculite (95 gm/liter) .125 lb/pint	0.000	PINTS	0.125	0.000
Oil-Dri (404 gm/liter) 0.42 lb/pint	0.000	PINTS	0.420	0.000
Liquids for Inorganic Matrix	0.000	PINTS	1.000	0.000
Liquids for Organic Matrix	0.000	PINTS	1.000	0.000
Liquids for Other Inorganics	0.000	PINTS	1.000	0.000
Aquaset Absorbent	0.000	PINTS	1.200	0.000
Uncured Cement	0.000	PINTS	3.000	0.000
Cured Cement (Solidified)	0.000	PINTS	1.125	0.000
Cured Cement (Other Inorganics)	0.000	PINTS	1.125	0.000

Waste Parameters

Waste Parameter	Remaining Weight %	Actual Weight Lbs
Iron-based Metals/Alloys	0.000	0.000
Aluminum-based Metals/Alloys	0.000	0.000
Other metals	0.000	0.000
Other Inorganic Materials	0.000	0.000
Vitrified	0.000	0.000
Cellulosics	0.000	0.000
Rubber	0.000	0.000
Plastic (Waste Materials)	0.000	0.000
Inorganic matrix	100.000	546.220
Organic matrix	0.000	0.000
Cement (Solidified)	0.000	0.000
Soils/gravel	0.000	0.000
Steel (packaging materials)	0.000	59.000
Plastic (packaging materials)	0.000	21.000

Esignature History

Esig Approval Id	User Id	Esignature Date	Comment
23223	GPETERSEN	02-FEB-2004 15:32	REWORK COMPLETE.
10644	GPETERSEN	28-NOV-2003 14:36	REWORK COMPLETE.
7968	GPETERSEN	06-NOV-2003 10:12	

AMWTP
Advanced Mixed Waste Treatment Project

BNFL, Inc.

RTR Analysis Report

Date: 01-Dec-2003

Time: 21:20

SUPERCEDED

Batch Id RTR03-00066	Container Id 10001238		Analysis Id 0000001308	
Metal can	0.000	EACH	0.500	0.000

Waste Items by Volume

Material Item	Quantity	Unit	Unit Wt(lbs)	Item Wt(lbs)
Vermiculite (95 gm/liter) .125 lb/pint	0.000	PINTS	0.125	0.000
Oil-Dri (404 gm/liter) 0.42 lb/pint	0.000	PINTS	0.420	0.000

Waste Parameters

Waste Parameter	Remaining Weight %	Actual Weight Lbs
Iron-based Metals/Alloys	0.000	0.000
Aluminum-based Metals/Alloys	0.000	0.000
Other metals	0.000	0.000
Other Inorganic Materials	0.000	0.000
Vitrified	0.000	0.000
Cellulosics	0.000	0.000
Rubber	0.000	0.000
Plastic (Waste Materials)	0.000	0.000
Inorganic matrix	100.000	546.220
Organic matrix	0.000	0.000
Cement (Solidified)	0.000	0.000
Soils/gravel	0.000	0.000
Steel (packaging materials)	0.000	59.000
Plastic (packaging materials)	0.000	21.000

Esignature History

Esig Approval Id	User Id	Esignature Date	Comment
10644	GPETERSEN	28-NOV-2003 14:36	REWORK COMPLETE.
7968	GPETERSEN	06-NOV-2003 10:12	

SUPERCEDED RFF 2-2-04

AMWTP
Advanced Mixed Waste Treatment Project

BNFL, Inc.

RTR Analysis Report

Date: 26-Nov-2003

Time: 07:11

SUPERCEDED CRW 12-17-03

Batch Id RTR03-00066 **Container Id** 10001238 **Analysis Id** 0000001308

Waste Items by Volume

Material Item	Quantity	Unit	Unit Wt(lbs)	Item Wt(lbs)
Vermiculite (95 gm/liter) .125 lb/pint	24.000	PINTS	0.125	3.000
Oil-Dri (404 gm/liter) 0.42 lb/pint	0.000	PINTS	0.420	0.000

Waste Parameters

Waste Parameter	Remaining Weight %	Actual Weight Lbs
Iron-based Metals/Alloys	0.000	0.000
Aluminum-based Metals/Alloys	0.000	0.000
Other metals	0.000	0.000
Other Inorganic Materials	0.000	3.000
Vitrified	0.000	0.000
Cellulosics	0.000	0.000
Rubber	0.000	0.000
Plastic (Waste Materials)	0.000	0.000
Inorganic matrix	100.000	543.220
Organic matrix	0.000	0.000
Cement (Solidified)	0.000	0.000
Soils/gravel	0.000	0.000
Steel (packaging materials)	0.000	59.000
Plastic (packaging materials)	0.000	21.000

Esignature History

Esig Approval Id	User Id	Esignature Date	Comment
7968	GPETERSEN	06-NOV-2003 10:12	

019

SUPERCEDED 12-17-03 CRW

AMWTP
Advanced Mixed Waste Treatment Project

BNFL, Inc.

RTR Analysis Report

Date: 26-Nov-2003
Time: 07:11

Batch Id RTR03-00066 **Container Id** 10001320 **Analysis Id** 0000001309

Container Type A **Analysis Status** Pass

RTR Date 06-NOV-2003 11:18 **Gross Weight in lbs.** 668.12 **Net Weight in lbs.** 588.12

Equipment Z-213-106 **Waste Matrix Code** S3150 **IDC** RF-004 Special Setups

Recording Id 2RTR03-00055 **Procedure Id** INST-OI-12-R **Revision** 15 **Approval Level** ITR

Is Test Pattern Resolution Ok? Yes **Start Side** B **Replicate** No

Audio Visual Ok? Yes **Closure Date** 09-MAR-1983 00:00 **Operator** SHAWN JORDAN

Result Comment TRAVIS THOMPSON TRAINING WITH OPERATOR SHAWN JORDAN. THIS IS A REWORK DRUM. THIS DRUM APPEARS TO BE SLUDGE, ONE DRUM BAG, ONE O-RING BAG, AND APROX. 5 GALLONS OF VERMICULITE. NO PROHIBITED ITEMS. SJ 11-06-03

Package

IDC Correct Yes **Recommended IDC** **Summary Category Code** S3000

Idc Change Reason

Liner Present? Yes **LinerType** TYPE 2

LinerPunctured? Yes **Sharp Objects Are Protected?** Yes

Fill Factor 95 **LayersOfPacking** 2

Bag Closure Method Twisted and Taped

Liquids

Liquid Present? No **Over One Inch of Liquid** No

Comment

Total Liquid Amount 0 pints **Liquid Between Liner and Drum** 0 pints

Liquid in Bags 0 pints **Containerized Liquid** 0 pints

Contents-Drum or Box

	Value	Comment		Value	Comment
Lead?	No		Mercury Present?	No	
Batteries?	No		Explosives?	No	
Compressed Gases?	No		PCBs Present?	No	
Non-Mixed Hazardous Waste Present?	No		Sealed Containers Over 4L?	No	

Non-Radionuclide Pyrophoric Materials Present? No

Waste exhibiting the characteristics of Ignitability, Corrosivity or Reactivity Present? No

Wastes Incompatible with backfill, seal and panel closure materials, container and packaging materials,shipping container or other wastes? No

Waste Material Items

Packaging Materials

Material Item	Quantity	Unit	Unit Wt(lbs)	Item Wt(lbs)
90 mil liner	1.000	EACH	16.000	16.000
Drum plastic bag	1.000	EACH	1.000	1.000
Box plastic liner	0.000	EACH	5.000	0.000
O-ring plastic bag in sludge, organic setups, etc.	1.000	EACH	4.000	4.000

Waste Items by Weight

Material Item	Quantity	Unit	Unit Wt(lbs)	Item Wt(lbs)
Cardboard liner (graphite mold waste)	0.000	EACH	4.000	0.000
Fiber pack	0.000	EACH	6.000	0.000
Box fiberboard liner	0.000	EACH	15.000	0.000
55-GAL DRUM (17c)	0.000	EACH	59.000	0.000
Plastic bag for waste	0.000	EACH	0.250	0.000
Lead brick 2 x 4 x 8 in.	0.000	EACH	25.000	0.000
Leaded rubber glove	0.000	EACH	5.500	0.000
Leaded rubber apron	0.000	EACH	5.250	0.000
Drum lead-liner (1/8"x28"x72")(.4lb/in.cubed)	0.000	EACH	100.000	0.000
Drum lead-liner (1/16"x28"x72")	0.000	EACH	50.000	0.000
Poly bottles (1 gal)	0.000	EACH	1.000	0.000
Metal can	0.000	EACH	0.500	0.000

Batch Id RTR03-00066 **Container Id** 10001320 **Analysis Id** 0000001309

Waste Items by Volume

Material Item	Quantity	Unit	Unit Wt(lbs)	Item Wt(lbs)
Vermiculite (95 gm/liter) .125 lb/pint	40.000	PINTS	0.125	5.000
Oil-Dri (404 gm/liter) 0.42 lb/pint	0.000	PINTS	0.420	0.000

Waste Parameters

Waste Parameter	Remaining Weight %	Actual Weight Lbs
Iron-based Metals/Alloys	0.000	0.000
Aluminum-based Metals/Alloys	0.000	0.000
Other metals	0.000	0.000
Other Inorganic Materials	0.000	5.000
Vitrified	0.000	0.000
Cellulosics	0.000	0.000
Rubber	0.000	0.000
Plastic (Waste Materials)	0.000	0.000
Inorganic matrix	100.000	583.120
Organic matrix	0.000	0.000
Cement (Solidified)	0.000	0.000
Soils/gravel	0.000	0.000
Steel (packaging materials)	0.000	59.000
Plastic (packaging materials)	0.000	21.000

Esignature History

Esig Approval Id	User Id	Esignature Date	Comment
7989	SJORDAN	06-NOV-2003 11:18	

AMWTP
Advanced Mixed Waste Treatment Project

BNFL, Inc.

RTR Analysis Report

Date: 01-Dec-2003
Time: 21:20

Batch Id RTR03-00066 **Container Id** 10001321 **Analysis Id** 0000001305

Container Type A **Analysis Status** Pass

RTR Date 05-NOV-2003 18:02 **Gross Weight in lbs.** 507.15 **Net Weight in lbs.** 427.15

Equipment Z-213-106 **Waste Matrix Code** S3150 **IDC** RF-004 Special Setups

Recording Id 2RTR03-00055 **Procedure Id** INST-OI-12-R **Revision** 15 **Approval Level** ITR

Is Test Pattern Resolution Ok? Yes **Start Side** B **Replicate** No

Audio Visual Ok? Yes **Closure Date** 03-SEP-1981 00:00 **Operator** SHAWN JORDAN

Result Comment THIS IS A REWORK DRUM. THIS DRUM CONTAINS A O-RING BAG, A DRUM BAG, A CUP OF VERMICULTIE. THE REST OF THE WASTE APPEARS TO BE SLUDGE. NO PROHIBITED ITEMS FOUND. SJ 11-05-03. AFTER REVIEWING RECORDING ABSORBENT MATERIAL APPEARS TO BE OIL DRI. CHANGED WTS PER REWORK. SJ 1129-03

Package

IDC Correct Yes **Recommended IDC** **Summary Category Code** S3000

Idc Change Reason

Liner Present? Yes **LinerType** TYPE 2

LinerPunctured? Yes **Sharp Objects Are Protected?** Yes

Fill Factor 80 **LayersOfPacking** 2

Bag Closure Method Twisted and Taped

Liquids

Liquid Present? No **Over One Inch of Liquid** No

Comment

Total Liquid Amount 0 pints **Liquid Between Liner and Drum** 0 pints

Liquid in Bags 0 pints **Containerized Liquid** 0 pints

Contents-Drum or Box

	Value	Comment		Value	Comment
Lead?	No		Mercury Present?	No	
Batteries?	No		Explosives?	No	
Compressed Gases?	No		PCBs Present?	No	
Non-Mixed Hazardous Waste Present?	No		Sealed Containers Over 4L?	No	

Non-Radionuclide Pyrophoric Materials Present? No

Waste exhibiting the characteristics of Ignitability, Corrosivity or Reactivity Present? No

Wastes incompatible with backfill, seal and panel closure materials, container and packaging materials,shipping container or other wastes? No

Waste Material Items

Packaging Materials

Material Item	Quantity	Unit	Unit Wt(lbs)	Item Wt(lbs)
90 mil liner	1.000	EACH	16.000	16.000
Drum plastic bag	1.000	EACH	1.000	1.000
Box plastic liner	0.000	EACH	5.000	0.000
O-ring plastic bag in sludge, organic setups, etc.	1.000	EACH	4.000	4.000

Waste Items by Weight

Material Item	Quantity	Unit	Unit Wt(lbs)	Item Wt(lbs)
Cardboard liner (graphite mold waste)	0.000	EACH	4.000	0.000
Fiber pack	0.000	EACH	6.000	0.000
Box fiberboard liner	0.000	EACH	15.000	0.000
55-GAL DRUM (17c)	0.000	EACH	59.000	0.000
Plastic bag for waste	0.000	EACH	0.250	0.000
Lead brick 2 x 4 x 8 in.	0.000	EACH	25.000	0.000
Leaded rubber glove	0.000	EACH	5.500	0.000
Leaded rubber apron	0.000	EACH	5.250	0.000
Drum lead-liner (1/8"x28"x72")(.4lb/in.cubed)	0.000	EACH	100.000	0.000
Drum lead-liner (1/16"x28"x72")	0.000	EACH	50.000	0.000
Poly bottles (1 gal)	0.000	EACH	1.000	0.000
Metal can	0.000	EACH	0.500	0.000

AMWTP
Advanced Mixed Waste Treatment Project

BNFL, Inc.

RTR Analysis Report

Date: 26-Nov-2003

Time: 07:11

SUPERCEDED ERW 12-17-03

Batch Id RTR03-00066	**Container Id** 10001321	**Analysis Id** 0000001305
Container Type A	**Analysis Status** Pass	
RTR Date 05-NOV-2003 18:02	**Gross Weight in lbs.** 507.15	**Net Weight in lbs.** 427.15
Equipment Z-213-106	**Waste Matrix Code** S3150	**IDC** RF-004 Special Setups
Recording Id 2RTR03-00055	**Procedure Id** INST-OI-12-R	**Revision** 15 **Approval Level** ITR
Is Test Pattern Resolution Ok? Yes	**Start Side** B	**Replicate** No
Audio Visual Ok? Yes	**Closure Date** 03-SEP-1981 00:00	**Operator** SHAWN JORDAN

Result Comment THIS IS A REWORK DRUM. THIS DRUM CONTAINS A O-RING BAG, A DRUM BAG, A CUP OF VERMICULTIE. THE REST OF THE WASTE APPEARS TO BE SLUDGE. NO PROHIBITED ITEMS FOUND. SJ 11-05-03

Package

IDC Correct Yes		**Recommended IDC**		**Summary Category Code**	S3000
Idc Change Reason					
Liner Present?	Yes	**LinerType**	TYPE 2		
LinerPunctured?	Yes	**Sharp Objects Are Protected?**	Yes		
Fill Factor	80	**LayersOfPacking**	2		
Bag Closure Method	Twisted and Taped				

Liquids

Liquid Present? No		**Over One Inch of Liquid** No	
Comment			
Total Liquid Amount	0 pints	**Liquid Between Liner and Drum**	0 pints
Liquid in Bags	0 pints	**Containerized Liquid**	0 pints

Contents-Drum or Box

	Value	*Comment*		*Value*	*Comment*
Lead?	No		**Mercury Present?**	No	
Batteries?	No		**Explosives?**	No	
Compressed Gases?	No		**PCBs Present?**	No	
Non-Mixed Hazardous Waste Present?	No		**Sealed Containers Over 4L?**	No	

Non-Radionuclide Pyrophoric Materials Present? No

Waste exhibiting the characteristics of Ignitability, Corrosivity or Reactivity Present? No

Wastes Incompatible with backfill, seal and panel closure materials, container and packaging materials,shipping container or other wastes? No

Waste Material Items

Packaging Materials

Material Item	Quantity	Unit	Unit Wt(lbs)	Item Wt(lbs)
90 mil liner	1.000	EACH	16.000	16.000
Drum plastic bag	1.000	EACH	1.000	1.000
Box plastic liner	0.000	EACH	5.000	0.000
O-ring plastic bag in sludge, organic setups, etc.	1.000	EACH	4.000	4.000

Waste Items by Weight

Material Item	Quantity	Unit	Unit Wt(lbs)	Item Wt(lbs)
Cardboard liner (graphite mold waste)	0.000	EACH	4.000	0.000
Fiber pack	0.000	EACH	6.000	0.000
Box fiberboard liner	0.000	EACH	15.000	0.000
55-GAL DRUM (17c)	0.000	EACH	59.000	0.000
Plastic bag for waste	0.000	EACH	0.250	0.000
Lead brick 2 x 4 x 8 in.	0.000	EACH	25.000	0.000
Leaded rubber glove	0.000	EACH	5.500	0.000
Leaded rubber apron	0.000	EACH	5.250	0.000
Drum lead-liner (1/8"x28"x72")(.4lb/in.cubed)	0.000	EACH	100.000	0.000
Drum lead-liner (1/16"x28"x72")	0.000	EACH	50.000	0.000
Poly bottles (1 gal)	0.000	EACH	1.000	0.000
Metal can	0.000	EACH	0.500	0.000

022 **SUPERCEDED** ERW 12-17-03

AMWTP
Advanced Mixed Waste Treatment Project

BNFL, Inc.

RTR Analysis Report

Date: 01-Dec-2003

Time: 21:20

Batch Id RTR03-00066 **Container Id** 10001321 **Analysis Id** 0000001305

Waste Items by Volume

Material Item	Quantity	Unit	Unit Wt(lbs)	Item Wt(lbs)
Vermiculite (95 gm/liter) .125 lb/pint	0.000	PINTS	0.125	0.000
Oil-Dri (404 gm/liter) 0.42 lb/pint	0.500	PINTS	0.420	0.210

Waste Parameters

Waste Parameter	Remaining Weight %	Actual Weight Lbs
Iron-based Metals/Alloys	0.000	0.000
Aluminum-based Metals/Alloys	0.000	0.000
Other metals	0.000	0.000
Other Inorganic Materials	0.000	0.210
Vitrified	0.000	0.000
Cellulosics	0.000	0.000
Rubber	0.000	0.000
Plastic (Waste Materials)	0.000	0.000
Inorganic matrix	100.000	426.940
Organic matrix	0.000	0.000
Cement (Solidified)	0.000	0.000
Soils/gravel	0.000	0.000
Steel (packaging materials)	0.000	59.000
Plastic (packaging materials)	0.000	21.000

RTR Independent Observation

Obsolete	Performed Date	User Name	Checklist	Answer (Yes)
	05-NOV-03	DLEE	1.Was an independent observation performed?	Yes
			2.Were all items on the recording media identified correctly in WTS?	Yes
			3.Do you agree with the operator?	Yes

Comment Working OI-12, rev 15 DKL 11/5/03

Esignature History

Esig Approval Id	User Id	Esignature Date	Comment
10694	SJORDAN	29-NOV-2003 00:58	REWORK COMPLETE. SJ 11-29-03
7926	SJORDAN	05-NOV-2003 18:02	

AMWTP
Advanced Mixed Waste Treatment Project

BNFL, Inc.

RTR Analysis Report

Date: 26-Nov-2003

Time: 07:11

SUPERCEDED RW 12-17-03

Batch Id RTR03-00066 **Container Id** 10001321 **Analysis Id** 0000001305

Waste Items by Volume

Material Item	Quantity	Unit	Unit Wt(lbs)	Item Wt(lbs)
Vermiculite (95 gm/liter) .125 lb/pint	0.500	PINTS	0.125	0.060
Oil-Dri (404 gm/liter) 0.42 lb/pint	0.000	PINTS	0.420	0.000

Waste Parameters

Waste Parameter	Remaining Weight %	Actual Weight Lbs
Iron-based Metals/Alloys	0.000	0.000
Aluminum-based Metals/Alloys	0.000	0.000
Other metals	0.000	0.000
Other Inorganic Materials	0.000	0.060
Vitrified	0.000	0.000
Cellulosics	0.000	0.000
Rubber	0.000	0.000
Plastic (Waste Materials)	0.000	0.000
Inorganic matrix	100.000	427.090
Organic matrix	0.000	0.000
Cement (Solidified)	0.000	0.000
Soils/gravel	0.000	0.000
Steel (packaging materials)	0.000	59.000
Plastic (packaging materials)	0.000	21.000

RTR Independent Observation

Obsolete	Performed Date	User Name	Checklist	Answer (Yes)
	05-NOV-03	DLEE	1.Was an independent observation performed?	Yes
			2.Were all items on the recording media identified correctly in WTS?	Yes
			3.Do you agree with the operator?	Yes

Comment Working OI-12, rev 15 DKL 11/5/03

Esignature History

Esig Approval Id	User Id	Esignature Date	Comment
7926	SJORDAN	05-NOV-2003 18:02	

023

SUPERCEDED RW 12-17-03

AMWTP
Advanced Mixed Waste Treatment Project

BNFL, Inc.

RTR Analysis Report

Date: 01-Dec-2003

Time: 21:20

Batch Id RTR03-00066 **Container Id** 10001322 **Analysis Id** 0000001301

Container Type A **Analysis Status** Pass

RTR Date 05-NOV-2003 16:29 **Gross Weight in lbs.** 551.25 **Net Weight in lbs.** 471.25

Equipment Z-213-106 **Waste Matrix Code** S3150 **IDC** RF-004 Special Setups

Recording Id 2RTR03-00055 **Procedure Id** INST-OI-12-R **Revision** 15 **Approval Level** ITR

Is Test Pattern Resolution Ok? Yes **Start Side** A **Replicate** No

Audio Visual Ok? Yes **Closure Date** 26-AUG-1981 00:00 **Operator** SHAWN JORDAN

Result Comment THIS DRUM IS A REWORK DRUM. THIS DRUM CONTAINS A DRUM BAG, A O-RING BAG, TWO GALLONS OF VERMICULITE.NO PROHIBITED ITEMS FOUND.THE REST OF THE WASTE APPEARS TO BE SLUDGE. SJ 11-05-03 AFTER REVIEWING RECORDING ABSORBENT MATERIAL APPEARS TO BE OIL DRI. CHANGED WTS PER REWORK. SJ 1129-03

Package

IDC Correct Yes **Recommended IDC** **Summary Category Code** S3000

Idc Change Reason

Liner Present? Yes **LinerType** TYPE 2

LinerPunctured? Yes **Sharp Objects Are Protected?** Yes

Fill Factor 80 **LayersOfPacking** 2

Bag Closure Method Twisted and Taped

Liquids

Liquid Present? No **Over One Inch of Liquid** No

Comment

Total Liquid Amount 0 pints **Liquid Between Liner and Drum** 0 pints

Liquid in Bags 0 pints **Containerized Liquid** 0 pints

Contents-Drum or Box

	Value	Comment		Value	Comment
Lead?	No		Mercury Present?	No	
Batteries?	No		Explosives?	No	
Compressed Gases?	No		PCBs Present?	No	
Non-Mixed Hazardous Waste Present?	No		Sealed Containers Over 4L?	No	

Non-Radionuclide Pyrophoric Materials Present? No

Waste exhibiting the characteristics of Ignitability, Corrosivity or Reactivity Present? No

Wastes Incompatible with backfill, seal and panel closure materials, container and packaging materials,shipping container or other wastes? No

Waste Material Items

Packaging Materials

Material Item	Quantity	Unit	Unit Wt(lbs)	Item Wt(lbs)
90 mil liner	1.000	EACH	16.000	16.000
Drum plastic bag	1.000	EACH	1.000	1.000
Box plastic liner	0.000	EACH	5.000	0.000
O-ring plastic bag in sludge, organic setups, etc.	1.000	EACH	4.000	4.000

Waste Items by Weight

Material Item	Quantity	Unit	Unit Wt(lbs)	Item Wt(lbs)
Cardboard liner (graphite mold waste)	0.000	EACH	4.000	0.000
Fiber pack	0.000	EACH	6.000	0.000
Box fiberboard liner	0.000	EACH	15.000	0.000
55-GAL DRUM (17c)	0.000	EACH	59.000	0.000
Plastic bag for waste	0.000	EACH	0.250	0.000
Lead brick 2 x 4 x 8 in.	0.000	EACH	25.000	0.000
Leaded rubber glove	0.000	EACH	5.500	0.000
Leaded rubber apron	0.000	EACH	5.250	0.000
Drum lead-liner (1/8"x28"x72")(.4lb/in.cubed)	0.000	EACH	100.000	0.000
Drum lead-liner (1/16"x28"x72")	0.000	EACH	50.000	0.000
Poly bottles (1 gal)	0.000	EACH	1.000	0.000

AMWTP
Advanced Mixed Waste Treatment Project

BNFL, Inc.

RTR Analysis Report

Date: 26-Nov-2003

Time: 07:11

SUPERCEDED ERW 12-17-03

Batch Id RTR03-00066	**Container Id** 10001322	**Analysis Id** 0000001301
Container Type A	**Analysis Status** Pass	
RTR Date 05-NOV-2003 16:29	**Gross Weight in lbs.** 551.25	**Net Weight in lbs.** 471.25
Equipment Z-213-106	**Waste Matrix Code** S3150	**IDC** RF-004 Special Setups
Recording Id 2RTR03-00055	**Procedure Id** INST-OI-12-R	**Revision** 15 **Approval Level** ITR
Is Test Pattern Resolution Ok? Yes	**Start Side** A	**Replicate** No
Audio Visual Ok? Yes	**Closure Date** 26-AUG-1981 00:00	**Operator** SHAWN JORDAN

Result Comment THIS DRUM IS A REWORK DRUM. THIS DRUM CONTAINS A DRUM BAG, A O-RING BAG, TWO GALLONS OF VERMICULITE.NO PROHIBITED ITEMS FOUND.THE REST OF THE WASTE APPEARS TO BE SLUDGE. SJ 11-05-03

Package

IDC Correct Yes	**Recommended IDC**	**Summary Category Code** S3000	
Idc Change Reason			
Liner Present? Yes	**LinerType** TYPE 2		
LinerPunctured? Yes	**Sharp Objects Are Protected?** Yes		
Fill Factor 80	**LayersOfPacking** 2		
Bag Closure Method Twisted and Taped			

Liquids

Liquid Present? No		**Over One Inch of Liquid** No	
Comment			
Total Liquid Amount 0 pints		**Liquid Between Liner and Drum** 0 pints	
Liquid in Bags 0 pints		**Containerized Liquid** 0 pints	

Contents-Drum or Box

	Value	*Comment*		*Value*	*Comment*
Lead?	No		**Mercury Present?**	No	
Batteries?	No		**Explosives?**	No	
Compressed Gases?	No		**PCBs Present?**	No	
Non-Mixed Hazardous Waste Present?	No		**Sealed Containers Over 4L?**	No	

Non-Radionuclide Pyrophoric Materials Present? No

Waste exhibiting the characteristics of Ignitability, Corrosivity or Reactivity Present? No

Wastes Incompatible with backfill, seal and panel closure materials, container and packaging materials,shipping container or other wastes? No

Waste Material Items

Packaging Materials

Material Item	Quantity	Unit	Unit Wt(lbs)	Item Wt(lbs)
90 mil liner	1.000	EACH	16.000	16.000
Drum plastic bag	1.000	EACH	1.000	1.000
Box plastic liner	0.000	EACH	5.000	0.000
O-ring plastic bag in sludge, organic setups, etc.	1.000	EACH	4.000	4.000

Waste Items by Weight

Material Item	Quantity	Unit	Unit Wt(lbs)	Item Wt(lbs)
Cardboard liner (graphite mold waste)	0.000	EACH	4.000	0.000
Fiber pack	0.000	EACH	6.000	0.000
Box fiberboard liner	0.000	EACH	15.000	0.000
55-GAL DRUM (17c)	0.000	EACH	59.000	0.000
Plastic bag for waste	0.000	EACH	0.250	0.000
Lead brick 2 x 4 x 8 in.	0.000	EACH	25.000	0.000
Leaded rubber glove	0.000	EACH	5.500	0.000
Leaded rubber apron	0.000	EACH	5.250	0.000
Drum lead-liner (1/8"x28"x72")(.4lb/in.cubed)	0.000	EACH	100.000	0.000
Drum lead-liner (1/16"x28"x72")	0.000	EACH	50.000	0.000
Poly bottles (1 gal)	0.000	EACH	1.000	0.000
Metal can	0.000	EACH	0.500	0.000

SUPERCEDED ERW 12-17-03

AMWTP
Advanced Mixed Waste Treatment Project

BNFL, Inc.

RTR Analysis Report

Date: 01-Dec-2003

Time: 21:20

Batch Id RTR03-00066 **Container Id** 10001322 **Analysis Id** 0000001301

Metal can	0.000	EACH	0.500	0.000

Waste Items by Volume

Material Item	Quantity	Unit	Unit Wt(lbs)	Item Wt(lbs)
Vermiculite (95 gm/liter) .125 lb/pint	0.000	PINTS	0.125	0.000
Oil-Dri (404 gm/liter) 0.42 lb/pint	16.000	PINTS	0.420	6.720

Waste Parameters

Waste Parameter	Remaining Weight %	Actual Weight Lbs
Iron-based Metals/Alloys	0.000	0.000
Aluminum-based Metals/Alloys	0.000	0.000
Other metals	0.000	0.000
Other Inorganic Materials	0.000	6.720
Vitrified	0.000	0.000
Cellulosics	0.000	0.000
Rubber	0.000	0.000
Plastic (Waste Materials)	0.000	0.000
Inorganic matrix	100.000	464.530
Organic matrix	0.000	0.000
Cement (Solidified)	0.000	0.000
Soils/gravel	0.000	0.000
Steel (packaging materials)	0.000	59.000
Plastic (packaging materials)	0.000	21.000

Esignature History

Esig Approval Id	User Id	Esignature Date	Comment
10696	SJORDAN	29-NOV-2003 01:02	REWORK COMPLETE. SJ 11-29-03
7920	SJORDAN	05-NOV-2003 16:29	

025

AMWTP
Advanced Mixed Waste Treatment Project

BNFL, Inc.

RTR Analysis Report

Date: 26-Nov-2003

Time: 07:11

SUPERCEDED ERW 12-17-03

Batch Id RTR03-00066 **Container Id** 10001322 **Analysis Id** 0000001301

Waste Items by Volume

Material Item	Quantity	Unit	Unit Wt(lbs)	Item Wt(lbs)
Vermiculite (95 gm/liter) .125 lb/pint	16.000	PINTS	0.125	2.000
Oil-Dri (404 gm/liter) 0.42 lb/pint	0.000	PINTS	0.420	0.000

Waste Parameters

Waste Parameter	Remaining Weight %	Actual Weight Lbs
Iron-based Metals/Alloys	0.000	0.000
Aluminum-based Metals/Alloys	0.000	0.000
Other metals	0.000	0.000
Other Inorganic Materials	0.000	2.000
Vitrified	0.000	0.000
Cellulosics	0.000	0.000
Rubber	0.000	0.000
Plastic (Waste Materials)	0.000	0.000
Inorganic matrix	100.000	469.250
Organic matrix	0.000	0.000
Cement (Solidified)	0.000	0.000
Soils/gravel	0.000	0.000
Steel (packaging materials)	0.000	59.000
Plastic (packaging materials)	0.000	21.000

Esignature History

Esig Approval Id	User Id	Esignature Date	Comment
7920	SJORDAN	05-NOV-2003 16:29	

SUPERCEDED ERW 12-17-03

AMWTP
Advanced Mixed Waste Treatment Project

BNFL, Inc.

RTR Analysis Report

Date: 26-Nov-2003

Time: 07:11

Batch Id RTR03-00066 **Container Id** 10001323 **Analysis Id** 0000001303

Container Type A **Analysis Status** Pass

RTR Date 05-NOV-2003 16:54 **Gross Weight in lbs.** 652.68 **Net Weight in lbs.** 572.68

Equipment Z-213-106 **Waste Matrix Code** S3150 **IDC** RF-004 Special Setups

Recording Id 2RTR03-00055 **Procedure Id** INST-OI-12-R **Revision** 15 **Approval Level** ITR

Is Test Pattern Resolution Ok? Yes **Start Side** A **Replicate** No

Audio Visual Ok? Yes **Closure Date** 21-SEP-1982 00:00 **Operator** SHAWN JORDAN

Result Comment THIS IS A REWORK DRUM. THIS DRUM CONTAINS A O-RING BAG, A DRUM BAG,FIVE GALLONS OF VERMICULITE.THE REST OF THE WASTE APPEARS TO BE SLUDGE. NO PROHIBITED ITEMS FOUND. SJ 11-05-03

Package

IDC Correct Yes **Recommended IDC** **Summary Category Code** S3000

Idc Change Reason

Liner Present? Yes **LinerType** TYPE 2

LinerPunctured? Yes **Sharp Objects Are Protected?** Yes

Fill Factor 90 **LayersOfPacking** 2

Bag Closure Method Twisted and Taped

Liquids

Liquid Present? No **Over One Inch of Liquid** No

Comment

Total Liquid Amount 0 pints **Liquid Between Liner and Drum** 0 pints

Liquid in Bags 0 pints **Containerized Liquid** 0 pints

Contents-Drum or Box

	Value	Comment		Value	Comment
Lead?	No		Mercury Present?	No	
Batteries?	No		Explosives?	No	
Compressed Gases?	No		PCBs Present?	No	
Non-Mixed Hazardous Waste Present?	No		Sealed Containers Over 4L?	No	

Non-Radionuclide Pyrophoric Materials Present? No

Waste exhibiting the characteristics of Ignitability, Corrosivity or Reactivity Present? No

Wastes Incompatible with backfill, seal and panel closure materials, container and packaging materials,shipping container or other wastes? No

Waste Material Items

Packaging Materials

Material Item	Quantity	Unit	Unit Wt(lbs)	Item Wt(lbs)
90 mil liner	1.000	EACH	16.000	16.000
Drum plastic bag	1.000	EACH	1.000	1.000
Box plastic liner	0.000	EACH	5.000	0.000
O-ring plastic bag in sludge, organic setups, etc.	1.000	EACH	4.000	4.000

Waste Items by Weight

Material Item	Quantity	Unit	Unit Wt(lbs)	Item Wt(lbs)
Cardboard liner (graphite mold waste)	0.000	EACH	4.000	0.000
Fiber pack	0.000	EACH	6.000	0.000
Box fiberboard liner	0.000	EACH	15.000	0.000
55-GAL DRUM (17c)	0.000	EACH	59.000	0.000
Plastic bag for waste	0.000	EACH	0.250	0.000
Lead brick 2 x 4 x 8 in.	0.000	EACH	25.000	0.000
Leaded rubber glove	0.000	EACH	5.500	0.000
Leaded rubber apron	0.000	EACH	5.250	0.000
Drum lead-liner (1/8"x28"x72")(.4lb/in.cubed)	0.000	EACH	100.000	0.000
Drum lead-liner (1/16"x28"x72")	0.000	EACH	50.000	0.000
Poly bottles (1 gal)	0.000	EACH	1.000	0.000
Metal can	0.000	EACH	0.500	0.000

Batch Id RTR03-00066 **Container Id** 10001323 **Analysis Id** 0000001303

Waste Items by Volume

Material Item	Quantity	Unit	Unit Wt(lbs)	Item Wt(lbs)
Vermiculite (95 gm/liter) .125 lb/pint	40.000	PINTS	0.125	5.000
Oil-Dri (404 gm/liter) 0.42 lb/pint	0.000	PINTS	0.420	0.000

Waste Parameters

Waste Parameter	Remaining Weight %	Actual Weight Lbs
Iron-based Metals/Alloys	0.000	0.000
Aluminum-based Metals/Alloys	0.000	0.000
Other metals	0.000	0.000
Other Inorganic Materials	0.000	5.000
Vitrified	0.000	0.000
Cellulosics	0.000	0.000
Rubber	0.000	0.000
Plastic (Waste Materials)	0.000	0.000
Inorganic matrix	100.000	567.680
Organic matrix	0.000	0.000
Cement (Solidified)	0.000	0.000
Soils/gravel	0.000	0.000
Steel (packaging materials)	0.000	59.000
Plastic (packaging materials)	0.000	21.000

Esignature History

Esig Approval Id	User Id	Esignature Date	Comment
7922	SJORDAN	05-NOV-2003 16:54	

AMWTP
Advanced Mixed Waste Treatment Project

BNFL, Inc.

RTR Analysis Report

Date: 01-Dec-2003
Time: 21:20

Batch Id RTR03-00066 **Container Id** 10001324 **Analysis Id** 0000001304

Container Type A **Analysis Status** Pass

RTR Date 05-NOV-2003 17:40 **Gross Weight in lbs.** 619.61 **Net Weight in lbs.** 539.61

Equipment Z-213-106 **Waste Matrix Code** S3150 **IDC** RF-004 Special Setups

Recording Id 2RTR03-00055 **Procedure Id** INST-OI-12-R **Revision** 15 **Approval Level** ITR

Is Test Pattern Resolution Ok? Yes **Start Side** B **Replicate** No

Audio Visual Ok? Yes **Closure Date** 09-DEC-1982 00:00 **Operator** SHAWN JORDAN

Result Comment THIS IS A REWORK DRUM. THIS DRUM CONTAINS A O-RING BAG, A DRUM BAG AND FIVE GALLONS OF VERMICULITE. THE REST OF THE WASTE APPEARS TO BE SLUDGE. NO PROHIBITED ITEMS FOUND. SJ 11-05-03. AFTER REVIEWING RECORDING CHANGED LINER TYPE IN WTS TO A TYPE 2 LINER. SJ 11-29-03

Package

IDC Correct Yes **Recommended IDC** **Summary Category Code** S3000

Idc Change Reason

Liner Present? Yes **LinerType** TYPE 2

LinerPunctured? Yes **Sharp Objects Are Protected?** Yes

Fill Factor 85 **LayersOfPacking** 2

Bag Closure Method Twisted and Taped

Liquids

Liquid Present? No **Over One Inch of Liquid** No

Comment

Total Liquid Amount 0 pints **Liquid Between Liner and Drum** 0 pints

Liquid in Bags 0 pints **Containerized Liquid** 0 pints

Contents-Drum or Box

	Value	Comment		Value	Comment
Lead?	No		Mercury Present?	No	
Batteries?	No		Explosives?	No	
Compressed Gases?	No		PCBs Present?	No	
Non-Mixed Hazardous Waste Present?	No		Sealed Containers Over 4L?	No	

Non-Radionuclide Pyrophoric Materials Present? No

Waste exhibiting the characteristics of Ignitability, Corrosivity or Reactivity Present? No

Wastes Incompatible with backfill, seal and panel closure materials, container and packaging materials,shipping container or other wastes? No

Waste Material Items

Packaging Materials

Material Item	Quantity	Unit	Unit Wt(lbs)	Item Wt(lbs)
90 mil liner	1.000	EACH	16.000	16.000
Drum plastic bag	1.000	EACH	1.000	1.000
Box plastic liner	0.000	EACH	5.000	0.000
O-ring plastic bag in sludge, organic setups, etc.	1.000	EACH	4.000	4.000

Waste Items by Weight

Material Item	Quantity	Unit	Unit Wt(lbs)	Item Wt(lbs)
Cardboard liner (graphite mold waste)	0.000	EACH	4.000	0.000
Fiber pack	0.000	EACH	6.000	0.000
Box fiberboard liner	0.000	EACH	15.000	0.000
55-GAL DRUM (17c)	0.000	EACH	59.000	0.000
Plastic bag for waste	0.000	EACH	0.250	0.000
Lead brick 2 x 4 x 8 in.	0.000	EACH	25.000	0.000
Leaded rubber glove	0.000	EACH	5.500	0.000
Leaded rubber apron	0.000	EACH	5.250	0.000
Drum lead-liner (1/8"x28"x72")(.4lb/in.cubed)	0.000	EACH	100.000	0.000
Drum lead-liner (1/16"x28"x72")	0.000	EACH	50.000	0.000
Poly bottles (1 gal)	0.000	EACH	1.000	0.000
Metal can	0.000	EACH	0.500	0.000

AMWTP Advanced Mixed Waste Treatment Project

BNFL, Inc.

RTR Analysis Report

Date: 26-Nov-2003

Time: 07:11

SUPERCEDED ERW 12-17-03

Batch Id RTR03-00066 **Container Id** 10001324 **Analysis Id** 0000001304

Container Type A **Analysis Status** Pass

RTR Date 05-NOV-2003 17:40 **Gross Weight in lbs.** 619.61 **Net Weight in lbs.** 539.61

Equipment Z-213-106 **Waste Matrix Code** S3150 **IDC** RF-004 Special Setups

Recording Id 2RTR03-00055 **Procedure Id** INST-OI-12-R **Revision** 15 **Approval Level** ITR

Is Test Pattern Resolution Ok? Yes **Start Side** B **Replicate** No

Audio Visual Ok? Yes **Closure Date** 09-DEC-1982 00:00 **Operator** SHAWN JORDAN

Result Comment THIS IS A REWORK DRUM. THIS DRUM CONTAINS A O-RING BAG, A DRUM BAG AND FIVE GALLONS OF VERMICULITE. THE REST OF THE WASTE APPEARS TO BE SLUDGE. NO PROHIBITED ITEMS FOUND. SJ 11-05-03.

Package

IDC Correct Yes **Recommended IDC** **Summary Category Code** S3000

Idc Change Reason

Liner Present? Yes **LinerType** TYPE 3

LinerPunctured? Yes **Sharp Objects Are Protected?** Yes

Fill Factor 85 **LayersOfPacking** 2

Bag Closure Method Twisted and Taped

Liquids

Liquid Present? No **Over One Inch of Liquid** No

Comment

Total Liquid Amount 0 pints **Liquid Between Liner and Drum** 0 pints

Liquid in Bags 0 pints **Containerized Liquid** 0 pints

Contents-Drum or Box

	Value	Comment		Value	Comment
Lead?	No		Mercury Present?	No	
Batteries?	No		Explosives?	No	
Compressed Gases?	No		PCBs Present?	No	
Non-Mixed Hazardous Waste Present?	No		Sealed Containers Over 4L?	No	

Non-Radionuclide Pyrophoric Materials Present? No

Waste exhibiting the characteristics of Ignitability, Corrosivity or Reactivity Present? No

Wastes Incompatible with backfill, seal and panel closure materials, container and packaging materials,shipping container or other wastes? No

Waste Material Items

Packaging Materials

Material Item	Quantity	Unit	Unit Wt(lbs)	Item Wt(lbs)
90 mil liner	1.000	EACH	16.000	16.000
Drum plastic bag	1.000	EACH	1.000	1.000
Box plastic liner	0.000	EACH	5.000	0.000
O-ring plastic bag in sludge, organic setups, etc.	1.000	EACH	4.000	4.000

Waste Items by Weight

Material Item	Quantity	Unit	Unit Wt(lbs)	Item Wt(lbs)
Cardboard liner (graphite mold waste)	0.000	EACH	4.000	0.000
Fiber pack	0.000	EACH	6.000	0.000
Box fiberboard liner	0.000	EACH	15.000	0.000
55-GAL DRUM (17c)	0.000	EACH	59.000	0.000
Plastic bag for waste	0.000	EACH	0.250	0.000
Lead brick 2 x 4 x 8 in.	0.000	EACH	25.000	0.000
Leaded rubber glove	0.000	EACH	5.500	0.000
Leaded rubber apron	0.000	EACH	5.250	0.000
Drum lead-liner (1/8"x28"x72")(.4lb/in.cubed)	0.000	EACH	100.000	0.000
Drum lead-liner (1/16"x28"x72")	0.000	EACH	50.000	0.000
Poly bottles (1 gal)	0.000	EACH	1.000	0.000
Metal can	0.000	EACH	0.500	0.000

028 SUPERCEDED ERW 12-17-03

AMWTP
Advanced Mixed Waste Treatment Project

BNFL, Inc.

RTR Analysis Report

Date: 01-Dec-2003

Time: 21:20

Batch Id RTR03-00066 **Container Id** 10001324 **Analysis Id** 0000001304

Waste Items by Volume

Material Item	Quantity	Unit	Unit Wt(lbs)	Item Wt(lbs)
Vermiculite (95 gm/liter) .125 lb/pint	40.000	PINTS	0.125	5.000
Oil-Dri (404 gm/liter) 0.42 lb/pint	0.000	PINTS	0.420	0.000

Waste Parameters

Waste Parameter	Remaining Weight %	Actual Weight Lbs
Iron-based Metals/Alloys	0.000	0.000
Aluminum-based Metals/Alloys	0.000	0.000
Other metals	0.000	0.000
Other Inorganic Materials	0.000	5.000
Vitrified	0.000	0.000
Cellulosics	0.000	0.000
Rubber	0.000	0.000
Plastic (Waste Materials)	0.000	0.000
Inorganic matrix	100.000	534.610
Organic matrix	0.000	0.000
Cement (Solidified)	0.000	0.000
Soils/gravel	0.000	0.000
Steel (packaging materials)	0.000	59.000
Plastic (packaging materials)	0.000	21.000

Esignature History

Esig Approval Id	User Id	Esignature Date	Comment
10698	SJORDAN	29-NOV-2003 01:07	REWORK COMPLETE. SJ 11-29-03
7925	SJORDAN	05-NOV-2003 17:40	

AMWTP
Advanced Mixed Waste Treatment Project

BNFL, Inc.

RTR Analysis Report

Date: 26-Nov-2003

Time: 07:11

SUPERCEDED LRW 12-17-03

Batch Id RTR03-00066 **Container Id** 10001324 **Analysis Id** 0000001304

Waste Items by Volume

Material Item	Quantity	Unit	Unit Wt(lbs)	Item Wt(lbs)
Vermiculite (95 gm/liter) .125 lb/pint	40.000	PINTS	0.125	5.000
Oil-Dri (404 gm/liter) 0.42 lb/pint	0.000	PINTS	0.420	0.000

Waste Parameters

Waste Parameter	Remaining Weight %	Actual Weight Lbs
Iron-based Metals/Alloys	0.000	0.000
Aluminum-based Metals/Alloys	0.000	0.000
Other metals	0.000	0.000
Other Inorganic Materials	0.000	5.000
Vitrified	0.000	0.000
Cellulosics	0.000	0.000
Rubber	0.000	0.000
Plastic (Waste Materials)	0.000	0.000
Inorganic matrix	100.000	534.610
Organic matrix	0.000	0.000
Cement (Solidified)	0.000	0.000
Soils/gravel	0.000	0.000
Steel (packaging materials)	0.000	59.000
Plastic (packaging materials)	0.000	21.000

Esignature History

Esig Approval Id	User Id	Esignature Date	Comment
7925	SJORDAN	05-NOV-2003 17:40	

029 SUPERCEDED LRW 12-17-03

AMWTP
Advanced Mixed Waste Treatment Project

BNFL, Inc.

RTR Analysis Report

Date: 26-Nov-2003
Time: 07:11

Batch Id RTR03-00066 **Container Id** 10001334 **Analysis Id** 0000001306

Container Type A **Analysis Status** Pass

RTR Date 06-NOV-2003 08:56 **Gross Weight in lbs.** 670.32 **Net Weight in lbs.** 590.32

Equipment Z-213-106 **Waste Matrix Code** S3150 **IDC** RF-004 Special Setups

Recording Id 2RTR03-00055 **Procedure Id** INST-OI-12-R **Revision** 15 **Approval Level** ITR

Is Test Pattern Resolution Ok? Yes **Start Side** B **Replicate** No

Audio Visual Ok? Yes **Closure Date** 09-MAR-1983 00:00 **Operator** GARY PETERSEN

Result Comment TRAVIS THOMPSON TRAINING WITH OPERATOR GARY PETERSEN. THIS DRUM CONTAINED ONE DRUM BAG, ONE O-RING BAG, 5 GALLONS OF VERMICULITE, AND SLUDGE. NO PROHIBITED ITEMS. GDP 11-6-03

Package

IDC Correct Yes **Recommended IDC** **Summary Category Code** S3000

Idc Change Reason

Liner Present? Yes **LinerType** TYPE 2

LinerPunctured? Yes **Sharp Objects Are Protected?** Yes

Fill Factor 95 **LayersOfPacking** 2

Bag Closure Method Twisted and Taped

Liquids

Liquid Present? No **Over One Inch of Liquid** No

Comment

Total Liquid Amount 0 pints **Liquid Between Liner and Drum** 0 pints

Liquid in Bags 0 pints **Containerized Liquid** 0 pints

Contents-Drum or Box

	Value	Comment		Value	Comment
Lead?	No		Mercury Present?	No	
Batteries?	No		Explosives?	No	
Compressed Gases?	No		PCBs Present?	No	
Non-Mixed Hazardous Waste Present?	No		Sealed Containers Over 4L?	No	

Non-Radionuclide Pyrophoric Materials Present? No

Waste exhibiting the characteristics of Ignitability, Corrosivity or Reactivity Present? No

Wastes Incompatible with backfill, seal and panel closure materials, container and packaging materials,shipping container or other wastes? No

Waste Material Items

Packaging Materials

Material Item	Quantity	Unit	Unit Wt(lbs)	Item Wt(lbs)
90 mil liner	1.000	EACH	16.000	16.000
Drum plastic bag	1.000	EACH	1.000	1.000
Box plastic liner	0.000	EACH	5.000	0.000
O-ring plastic bag in sludge; organic setups, etc.	1.000	EACH	4.000	4.000

Waste Items by Weight

Material Item	Quantity	Unit	Unit Wt(lbs)	Item Wt(lbs)
Cardboard liner (graphite mold waste)	0.000	EACH	4.000	0.000
Fiber pack	0.000	EACH	6.000	0.000
Box fiberboard liner	0.000	EACH	15.000	0.000
55-GAL DRUM (17c)	0.000	EACH	59.000	0.000
Plastic bag for waste	0.000	EACH	0.250	0.000
Lead brick 2 x 4 x 8 in.	0.000	EACH	25.000	0.000
Leaded rubber glove	0.000	EACH	5.500	0.000
Leaded rubber apron	0.000	EACH	5.250	0.000
Drum lead-liner (1/8"x28"x72")(.4lb/in.cubed)	0.000	EACH	100.000	0.000
Drum lead-liner (1/16"x28"x72")	0.000	EACH	50.000	0.000
Poly bottles (1 gal)	0.000	EACH	1.000	0.000
Metal can	0.000	EACH	0.500	0.000

AMWTP
Advanced Mixed Waste Treatment Project

BNFL, Inc.

RTR Analysis Report

Date: 26-Nov-2003

Time: 07:11

Batch Id RTR03-00066 **Container Id** 10001334 **Analysis Id** 0000001306

Waste Items by Volume

Material Item	Quantity	Unit	Unit Wt(lbs)	Item Wt(lbs)
Vermiculite (95 gm/liter) .125 lb/pint	40.000	PINTS	0.125	5.000
Oil-Dri (404 gm/liter) 0.42 lb/pint	0.000	PINTS	0.420	0.000

Waste Parameters

Waste Parameter	Remaining Weight %	Actual Weight Lbs
Iron-based Metals/Alloys	0.000	0.000
Aluminum-based Metals/Alloys	0.000	0.000
Other metals	0.000	0.000
Other Inorganic Materials	0.000	5.000
Vitrified	0.000	0.000
Cellulosics	0.000	0.000
Rubber	0.000	0.000
Plastic (Waste Materials)	0.000	0.000
Inorganic matrix	100.000	585.320
Organic matrix	0.000	0.000
Cement (Solidified)	0.000	0.000
Soils/gravel	0.000	0.000
Steel (packaging materials)	0.000	59.000
Plastic (packaging materials)	0.000	21.000

Esignature History

Esig Approval Id	User Id	Esignature Date	Comment
7954	GPETERSEN	06-NOV-2003 08:56	

AMWTP
Advanced Mixed Waste Treatment Project

BNFL, Inc.

RTR Analysis Report

Date: 26-Nov-2003
Time: 07:11

Batch Id RTR03-00066 **Container Id** 10001357 **Analysis Id** 0000001294

Container Type A **Analysis Status** Pass
RTR Date 05-NOV-2003 14:50 **Gross Weight in lbs.** 346.19 **Net Weight in lbs.** 266.19
Equipment Z-213-106 **Waste Matrix Code** S3150 **IDC** RF-004 Special Setups
Recording Id 2RTR03-00055 **Procedure Id** INST-OI-12-R **Revision** 15 **Approval Level** ITR
Is Test Pattern Resolution Ok? Yes **Start Side** A **Replicate** No
Audio Visual Ok? Yes **Closure Date** 22-JAN-1982 00:00 **Operator** DENISE LEE
Result Comment This drum contains sludge, oil dri, drum bag and o-ring bag. DKL 11/5/03

Package

IDC Correct Yes **Recommended IDC** **Summary Category Code** S3000
Idc Change Reason

Liner Present? Yes **LinerType** TYPE 2
LinerPunctured? Yes **Sharp Objects Are Protected?** Yes
Fill Factor 95 **LayersOfPacking** 2
Bag Closure Method Twisted and Taped

Liquids

Liquid Present? No **Over One Inch of Liquid** No
Comment
Total Liquid Amount 0 pints **Liquid Between Liner and Drum** 0 pints
Liquid in Bags 0 pints **Containerized Liquid** 0 pints

Contents-Drum or Box

	Value	Comment		Value	Comment
Lead?	No		Mercury Present?	No	
Batteries?	No		Explosives?	No	
Compressed Gases?	No		PCBs Present?	No	
Non-Mixed Hazardous Waste Present?	No		Sealed Containers Over 4L?	No	

Non-Radionuclide Pyrophoric Materials Present? No
Waste exhibiting the characteristics of Ignitability, Corrosivity or Reactivity Present? No
Wastes Incompatible with backfill, seal and panel closure materials, container and packaging materials,shipping container or other wastes? No

Waste Material Items

Packaging Materials

Material Item	Quantity	Unit	Unit Wt(lbs)	Item Wt(lbs)
90 mil liner	1.000	EACH	16.000	16.000
Drum plastic bag	1.000	EACH	1.000	1.000
Box plastic liner	0.000	EACH	5.000	0.000
O-ring plastic bag in sludge, organic setups, etc.	1.000	EACH	4.000	4.000

Waste Items by Weight

Material Item	Quantity	Unit	Unit Wt(lbs)	Item Wt(lbs)
Cardboard liner (graphite mold waste)	0.000	EACH	4.000	0.000
Fiber pack	0.000	EACH	6.000	0.000
Box fiberboard liner	0.000	EACH	15.000	0.000
55-GAL DRUM (17c)	0.000	EACH	59.000	0.000
Plastic bag for waste	0.000	EACH	0.250	0.000
Lead brick 2 x 4 x 8 in.	0.000	EACH	25.000	0.000
Leaded rubber glove	0.000	EACH	5.500	0.000
Leaded rubber apron	0.000	EACH	5.250	0.000
Drum lead-liner (1/8"x28"x72")(.4lb/in.cubed)	0.000	EACH	100.000	0.000
Drum lead-liner (1/16"x28"x72")	0.000	EACH	50.000	0.000
Poly bottles (1 gal)	0.000	EACH	1.000	0.000
Metal can	0.000	EACH	0.500	0.000

AMWTP
Advanced Mixed Waste Treatment Project

BNFL, Inc.

RTR Analysis Report

Date: 26-Nov-2003

Time: 07:11

Batch Id RTR03-00066 **Container Id** 10001357 **Analysis Id** 0000001294

Waste Items by Volume

Material Item	Quantity	Unit	Unit Wt(lbs)	Item Wt(lbs)
Vermiculite (95 gm/liter) .125 lb/pint	0.000	PINTS	0.125	0.000
Oil-Dri (404 gm/liter) 0.42 lb/pint	12.000	PINTS	0.420	5.040

Waste Parameters

Waste Parameter	Remaining Weight %	Actual Weight Lbs
Iron-based Metals/Alloys	0.000	0.000
Aluminum-based Metals/Alloys	0.000	0.000
Other metals	0.000	0.000
Other Inorganic Materials	0.000	5.040
Vitrified	0.000	0.000
Cellulosics	0.000	0.000
Rubber	0.000	0.000
Plastic (Waste Materials)	0.000	0.000
Inorganic matrix	100.000	261.150
Organic matrix	0.000	0.000
Cement (Solidified)	0.000	0.000
Soils/gravel	0.000	0.000
Steel (packaging materials)	0.000	59.000
Plastic (packaging materials)	0.000	21.000

Esignature History

Esig Approval Id	User Id	Esignature Date	Comment
7909	DLEE	05-NOV-2003 14:50	

AMWTP
Advanced Mixed Waste Treatment Project

BNFL, Inc.

RTR Analysis Report

Date: 26-Nov-2003
Time: 07:11

Batch Id RTR03-00066 **Container Id** 10001360 **Analysis Id** 0000001296

Container Type A **Analysis Status** Pass

RTR Date 05-NOV-2003 15:03 **Gross Weight in lbs.** 628.43 **Net Weight in lbs.** 548.43

Equipment Z-213-106 **Waste Matrix Code** S3150 **IDC** RF-004 Special Setups

Recording Id 2RTR03-00055 **Procedure Id** INST-OI-12-R **Revision** 15 **Approval Level** ITR

Is Test Pattern Resolution Ok? Yes **Start Side** A **Replicate** No

Audio Visual Ok? Yes **Closure Date** 18-APR-1984 00:00 **Operator** DENISE LEE

Result Comment This drum contains sludge, drum bag and o-ring bag. DKL 11/5/03

Package

IDC Correct Yes **Recommended IDC** **Summary Category Code** S3000

Idc Change Reason

Liner Present? Yes **LinerType** TYPE 3

LinerPunctured? Yes **Sharp Objects Are Protected?** Yes

Fill Factor 75 **LayersOfPacking** 2

Bag Closure Method Twisted and Taped

Liquids

Liquid Present? No **Over One Inch of Liquid** No

Comment

Total Liquid Amount 0 pints **Liquid Between Liner and Drum** 0 pints

Liquid in Bags 0 pints **Containerized Liquid** 0 pints

Contents-Drum or Box

	Value	Comment		Value	Comment
Lead?	No		Mercury Present?	No	
Batteries?	No		Explosives?	No	
Compressed Gases?	No		PCBs Present?	No	
Non-Mixed Hazardous Waste Present?	No		Sealed Containers Over 4L?	No	

Non-Radionuclide Pyrophoric Materials Present? No

Waste exhibiting the characteristics of Ignitability, Corrosivity or Reactivity Present? No

Wastes Incompatible with backfill, seal and panel closure materials, container and packaging materials,shipping container or other wastes? No

Waste Material Items

Packaging Materials

Material Item	Quantity	Unit	Unit Wt(lbs)	Item Wt(lbs)
90 mil liner	1.000	EACH	16.000	16.000
Drum plastic bag	1.000	EACH	1.000	1.000
Box plastic liner	0.000	EACH	5.000	0.000
O-ring plastic bag in sludge, organic setups, etc.	1.000	EACH	4.000	4.000

Waste Items by Weight

Material Item	Quantity	Unit	Unit Wt(lbs)	Item Wt(lbs)
Cardboard liner (graphite mold waste)	0.000	EACH	4.000	0.000
Fiber pack	0.000	EACH	6.000	0.000
Box fiberboard liner	0.000	EACH	15.000	0.000
55-GAL DRUM (17c)	0.000	EACH	59.000	0.000
Plastic bag for waste	0.000	EACH	0.250	0.000
Lead brick 2 x 4 x 8 in.	0.000	EACH	25.000	0.000
Leaded rubber glove	0.000	EACH	5.500	0.000
Leaded rubber apron	0.000	EACH	5.250	0.000
Drum lead-liner (1/8"x28"x72")(.4lb/in.cubed)	0.000	EACH	100.000	0.000
Drum lead-liner (1/16"x28"x72")	0.000	EACH	50.000	0.000
Poly bottles (1 gal)	0.000	EACH	1.000	0.000
Metal can	0.000	EACH	0.500	0.000

Batch Id RTR03-00066 **Container Id** 10001360 **Analysis Id** 0000001296

Waste Items by Volume

Material Item	Quantity	Unit	Unit Wt(lbs)	Item Wt(lbs)
Vermiculite (95 gm/liter) .125 lb/pint	0.000	PINTS	0.125	0.000
Oil-Dri (404 gm/liter) 0.42 lb/pint	0.000	PINTS	0.420	0.000

Waste Parameters

Waste Parameter	Remaining Weight %	Actual Weight Lbs
Iron-based Metals/Alloys	0.000	0.000
Aluminum-based Metals/Alloys	0.000	0.000
Other metals	0.000	0.000
Other Inorganic Materials	0.000	0.000
Vitrified	0.000	0.000
Cellulosics	0.000	0.000
Rubber	0.000	0.000
Plastic (Waste Materials)	0.000	0.000
Inorganic matrix	100.000	548.430
Organic matrix	0.000	0.000
Cement (Solidified)	0.000	0.000
Soils/gravel	0.000	0.000
Steel (packaging materials)	0.000	59.000
Plastic (packaging materials)	0.000	21.000

Esignature History

Esig Approval Id	User Id	Esignature Date	Comment
7912	DLEE	05-NOV-2003 15:03	

AMWTP
Advanced Mixed Waste Treatment Project

BNFL, Inc.

RTR Analysis Report

Date: 26-Nov-2003

Time: 07:11

Batch Id RTR03-00066 **Container Id** 10001362 **Analysis Id** 0000001290

Container Type A **Analysis Status** Pass

RTR Date 05-NOV-2003 13:07 **Gross Weight in lbs.** 628.43 **Net Weight in lbs.** 548.43

Equipment Z-213-106 **Waste Matrix Code** S3150 **IDC** RF-004 Special Setups

Recording Id 2RTR03-00055 **Procedure Id** INST-OI-12-R **Revision** 15 **Approval Level** ITR

Is Test Pattern Resolution Ok? Yes **Start Side** A **Replicate** No

Audio Visual Ok? Yes **Closure Date** 10-MAY-1984 00:00 **Operator** DENISE LEE

Result Comment This drum contained slugde, drum bag and o-ring bag. DKL 11/5/03

Package

IDC Correct Yes **Recommended IDC** **Summary Category Code** S3000

Idc Change Reason

Liner Present? Yes **LinerType** TYPE 3

LinerPunctured? Yes **Sharp Objects Are Protected?** Yes

Fill Factor 85 **LayersOfPacking** 2

Bag Closure Method Twisted and Taped

Liquids

Liquid Present? No **Over One Inch of Liquid** No

Comment

Total Liquid Amount 0 pints **Liquid Between Liner and Drum** 0 pints

Liquid in Bags 0 pints **Containerized Liquid** 0 pints

Contents-Drum or Box

	Value	Comment		Value	Comment
Lead?	No		Mercury Present?	No	
Batteries?	No		Explosives?	No	
Compressed Gases?	No		PCBs Present?	No	
Non-Mixed Hazardous Waste Present?	No		Sealed Containers Over 4L?	No	

Non-Radionuclide Pyrophoric Materials Present? No

Waste exhibiting the characteristics of Ignitability, Corrosivity or Reactivity Present? No

Wastes incompatible with backfill, seal and panel closure materials, container and packaging materials,shipping container or other wastes? No

Waste Material Items

Packaging Materials

Material Item	Quantity	Unit	Unit Wt(lbs)	Item Wt(lbs)
90 mil liner	1.000	EACH	16.000	16.000
Drum plastic bag	1.000	EACH	1.000	1.000
Box plastic liner	0.000	EACH	5.000	0.000
O-ring plastic bag in sludge, organic setups, etc.	1.000	EACH	4.000	4.000

Waste Items by Weight

Material Item	Quantity	Unit	Unit Wt(lbs)	Item Wt(lbs)
Cardboard liner (graphite mold waste)	0.000	EACH	4.000	0.000
Fiber pack	0.000	EACH	6.000	0.000
Box fiberboard liner	0.000	EACH	15.000	0.000
55-GAL DRUM (17c)	0.000	EACH	59.000	0.000
Plastic bag for waste	0.000	EACH	0.250	0.000
Lead brick 2 x 4 x 8 in.	0.000	EACH	25.000	0.000
Leaded rubber glove	0.000	EACH	5.500	0.000
Leaded rubber apron	0.000	EACH	5.250	0.000
Drum lead-liner (1/8"x28"x72")(.4lb/in.cubed)	0.000	EACH	100.000	0.000
Drum lead-liner (1/16"x28"x72")	0.000	EACH	50.000	0.000
Poly bottles (1 gal)	0.000	EACH	1.000	0.000
Metal can	0.000	EACH	0.500	0.000

AMWTP
Advanced Mixed Waste Treatment Project

BNFL, Inc.

RTR Analysis Report

Date: 26-Nov-2003

Time: 07:11

Batch Id RTR03-00066 **Container Id** 10001362 **Analysis Id** 0000001290

Waste Items by Volume

Material Item	Quantity	Unit	Unit Wt(lbs)	Item Wt(lbs)
Vermiculite (95 gm/liter) .125 lb/pint	0.000	PINTS	0.125	0.000
Oil-Dri (404 gm/liter) 0.42 lb/pint	0.000	PINTS	0.420	0.000

Waste Parameters

Waste Parameter	Remaining Weight %	Actual Weight Lbs
Iron-based Metals/Alloys	0.000	0.000
Aluminum-based Metals/Alloys	0.000	0.000
Other metals	0.000	0.000
Other Inorganic Materials	0.000	0.000
Vitrified	0.000	0.000
Cellulosics	0.000	0.000
Rubber	0.000	0.000
Plastic (Waste Materials)	0.000	0.000
Inorganic matrix	100.000	548.430
Organic matrix	0.000	0.000
Cement (Solidified)	0.000	0.000
Soils/gravel	0.000	0.000
Steel (packaging materials)	0.000	59.000
Plastic (packaging materials)	0.000	21.000

Esignature History

Esig Approval Id	User Id	Esignature Date	Comment
7892	DLEE	05-NOV-2003 13:07	

037

AMWTP
Advanced Mixed Waste Treatment Project

BNFL, Inc.

RTR Analysis Report

Date: 26-Nov-2003

Time: 07:11

Batch Id RTR03-00066 **Container Id** 10001365 **Analysis Id** 0000001311

Container Type A **Analysis Status** Pass

RTR Date 06-NOV-2003 12:55 **Gross Weight in lbs.** 654.89 **Net Weight in lbs.** 574.89

Equipment Z-213-106 **Waste Matrix Code** S3150 **IDC** RF-004 Special Setups

Recording Id 2RTR03-00056 **Procedure Id** INST-OI-12-R **Revision** 15 **Approval Level** ITR

Is Test Pattern Resolution Ok? Yes **Start Side** A **Replicate** No

Audio Visual Ok? Yes **Closure Date** 29-MAR-1984 00:00 **Operator** GARY PETERSEN

Result Comment THIS IS A REWORK DRUM. THIS DRUM APPEARS TO BE SLUDGE, ONE DRUM BAG, ONE O-RING BAG AND NO PROHIBITED ITEMS. GDP 11-06-03

Package

IDC Correct Yes **Recommended IDC** **Summary Category Code** S3000

Idc Change Reason

Liner Present? Yes **LinerType** TYPE 3

LinerPunctured? Yes **Sharp Objects Are Protected?** Yes

Fill Factor 85 **LayersOfPacking** 2

Bag Closure Method Twisted and Taped

Liquids

Liquid Present? No **Over One Inch of Liquid** No

Comment

Total Liquid Amount 0 pints **Liquid Between Liner and Drum** 0 pints

Liquid in Bags 0 pints **Containerized Liquid** 0 pints

Contents-Drum or Box

	Value	Comment		Value	Comment
Lead?	No		Mercury Present?	No	
Batteries?	No		Explosives?	No	
Compressed Gases?	No		PCBs Present?	No	
Non-Mixed Hazardous Waste Present?	No		Sealed Containers Over 4L?	No	

Non-Radionuclide Pyrophoric Materials Present? No

Waste exhibiting the characteristics of Ignitability, Corrosivity or Reactivity Present? No

Wastes Incompatible with backfill, seal and panel closure materials, container and packaging materials,shipping container or other wastes? No

Waste Material Items

Packaging Materials

Material Item	Quantity	Unit	Unit Wt(lbs)	Item Wt(lbs)
90 mil liner	1.000	EACH	16.000	16.000
Drum plastic bag	1.000	EACH	1.000	1.000
Box plastic liner	0.000	EACH	5.000	0.000
O-ring plastic bag in sludge, organic setups, etc.	1.000	EACH	4.000	4.000

Waste Items by Weight

Material Item	Quantity	Unit	Unit Wt(lbs)	Item Wt(lbs)
Cardboard liner (graphite mold waste)	0.000	EACH	4.000	0.000
Fiber pack	0.000	EACH	6.000	0.000
Box fiberboard liner	0.000	EACH	15.000	0.000
55-GAL DRUM (17c)	0.000	EACH	59.000	0.000
Plastic bag for waste	0.000	EACH	0.250	0.000
Lead brick 2 x 4 x 8 in.	0.000	EACH	25.000	0.000
Leaded rubber glove	0.000	EACH	5.500	0.000
Leaded rubber apron	0.000	EACH	5.250	0.000
Drum lead-liner (1/8"x28"x72")(.4lb/in.cubed)	0.000	EACH	100.000	0.000
Drum lead-liner (1/16"x28"x72")	0.000	EACH	50.000	0.000
Poly bottles (1 gal)	0.000	EACH	1.000	0.000
Metal can	0.000	EACH	0.500	0.000

AMWTP
Advanced Mixed Waste Treatment Project

BNFL, Inc.

RTR Analysis Report

Date: 26-Nov-2003

Time: 07:11

Batch Id RTR03-00066 **Container Id** 10001365 **Analysis Id** 0000001311

Waste Items by Volume

Material Item	Quantity	Unit	Unit Wt(lbs)	Item Wt(lbs)
Vermiculite (95 gm/liter) .125 lb/pint	0.000	PINTS	0.125	0.000
Oil-Dri (404 gm/liter) 0.42 lb/pint	0.000	PINTS	0.420	0.000

Waste Parameters

Waste Parameter	Remaining Weight %	Actual Weight Lbs
Iron-based Metals/Alloys	0.000	0.000
Aluminum-based Metals/Alloys	0.000	0.000
Other metals	0.000	0.000
Other Inorganic Materials	0.000	0.000
Vitrified	0.000	0.000
Cellulosics	0.000	0.000
Rubber	0.000	0.000
Plastic (Waste Materials)	0.000	0.000
Inorganic matrix	100.000	574.890
Organic matrix	0.000	0.000
Cement (Solidified)	0.000	0.000
Soils/gravel	0.000	0.000
Steel (packaging materials)	0.000	59.000
Plastic (packaging materials)	0.000	21.000

Esignature History

Esig Approval Id	User Id	Esignature Date	Comment
8001	GPETERSEN	06-NOV-2003 12:55	

039

AMWTP
Advanced Mixed Waste Treatment Project

BNFL, Inc.

RTR Analysis Report

Date: 17-Dec-2003
Time: 09:18

Batch Id RTR03-00066 **Container Id** 10001368 **Analysis Id** 0000001291

Container Type A **Analysis Status** Pass

RTR Date 05-NOV-2003 13:46 **Gross Weight in lbs.** 573.3 **Net Weight in lbs.** 493.3

Equipment Z-213-106 **Waste Matrix Code** S3150 **IDC** RF-004 Special Setups

Recording Id 2RTR03-00055 **Procedure Id** INST-OI-12-R **Revision** 15 **Approval Level** ITR

Is Test Pattern Resolution Ok? Yes **Start Side** A **Replicate** No

Audio Visual Ok? Yes **Closure Date** 12-DEC-1980 00:00 **Operator** GARY PETERSEN

Result Comment THIS DRUM APPEARS TO BE SLUDGE. 1 DRUM BAG AND 1 O-RING BAG. I CALLED OUT VERMICULITE. GDP 11-05-03
{ AFTER REVIEW OF THE RECORDING,FOR REWORK, THE VERMICULITE THAT I CALLED OUT WAS ACTUALLY PART OF THE WASTE } GDP 11-28-03
After reviewing this drum further, for rework, what I called out as vermiculite, is actualy oil dry, and there was approx. 1 cup of oil dry on top of the bagging that I did not account for in my summary or WTS. 12-15-03 GDP

Package

IDC Correct Yes **Recommended IDC** **Summary Category Code** S3000

Idc Change Reason

Liner Present? Yes **LinerType** TYPE 2

LinerPunctured? Yes **Sharp Objects Are Protected?** Yes

Fill Factor 80 **LayersOfPacking** 2

Bag Closure Method Twisted and Taped

Liquids

Liquid Present? No **Over One Inch of Liquid** No

Comment

Total Liquid Amount 0 pints **Liquid Between Liner and Drum** 0 pints

Liquid in Bags 0 pints **Containerized Liquid** 0 pints

Contents-Drum or Box

	Value	Comment		Value	Comment
Lead?	No		Mercury Present?	No	
Batteries?	No		Explosives?	No	
Compressed Gases?	No		PCBs Present?	No	
Non-Mixed Hazardous Waste Present?	No		Sealed Containers Over 4L?	No	

Non-Radionuclide Pyrophoric Materials Present? No

Waste exhibiting the characteristics of Ignitability, Corrosivity or Reactivity Present? No

Wastes Incompatible with backfill, seal and panel closure materials, container and packaging materials,shipping container or other wastes? No

Waste Material Items

Packaging Materials

Material Item	Quantity	Unit	Unit Wt(lbs)	Item Wt(lbs)
90 mil liner	1.000	EACH	16.000	16.000
Drum plastic bag	1.000	EACH	1.000	1.000
Box plastic liner	0.000	EACH	5.000	0.000
O-ring plastic bag in sludge, organic setups, etc.	1.000	EACH	4.000	4.000

Waste Items by Weight

Material Item	Quantity	Unit	Unit Wt(lbs)	Item Wt(lbs)
Cardboard liner (graphite mold waste)	0.000	EACH	4.000	0.000
Fiber pack	0.000	EACH	6.000	0.000
Box fiberboard liner	0.000	EACH	15.000	0.000
55-GAL DRUM (17c)	0.000	EACH	59.000	0.000
Plastic bag for waste	0.000	EACH	0.250	0.000
Lead brick 2 x 4 x 8 in.	0.000	EACH	25.000	0.000
Leaded rubber glove	0.000	EACH	5.500	0.000
Leaded rubber apron	0.000	EACH	5.250	0.000
Drum lead-liner (1/8"x28"x72")(.4lb/in.cubed)	0.000	EACH	100.000	0.000

AMWTP
Advanced Mixed Waste Treatment Project

BNFL, Inc.

RTR Analysis Report

Date: 01-Dec-2003

Time: 21:20

SUPERCEDED ERW 12-17-03

Batch Id RTR03-00066	**Container Id** 10001368	**Analysis Id** 0000001291
Container Type A	**Analysis Status** Pass	
RTR Date 05-NOV-2003 13:46	**Gross Weight in lbs.** 573.3	**Net Weight in lbs.** 493.3
Equipment Z-213-106	**Waste Matrix Code** S3150	**IDC** RF-004 Special Setups
Recording Id 2RTR03-00055	**Procedure Id** INST-OI-12-R	**Revision** 15 **Approval Level** ITR
Is Test Pattern Resolution Ok? Yes	**Start Side** A	**Replicate** No
Audio Visual Ok? Yes	**Closure Date** 12-DEC-1980 00:00	**Operator** GARY PETERSEN

Result Comment THIS DRUM APPEARS TO BE SLUDGE. 1 DRUM BAG AND 1 O-RING BAG. I CALLED OUT VERMICULITE. GDP 11-05-03 { AFTER REVIEW OF THE RECORDING,FOR REWORK, THE VERMICULITE THAT I CALLED OUT WAS ACTUALLY PART OF THE WASTE } GDP 11-28-03

Package

IDC Correct Yes **Recommended IDC** **Summary Category Code** S3000

Idc Change Reason

Liner Present?	Yes	**LinerType**	TYPE 2
LinerPunctured?	Yes	**Sharp Objects Are Protected?**	Yes
Fill Factor	80	**LayersOfPacking**	2
Bag Closure Method	Twisted and Taped		

Liquids

Liquid Present?	No	**Over One Inch of Liquid**	No
Comment			
Total Liquid Amount	0 pints	**Liquid Between Liner and Drum**	0 pints
Liquid in Bags	0 pints	**Containerized Liquid**	0 pints

Contents-Drum or Box

	Value	Comment		Value	Comment
Lead?	No		**Mercury Present?**	No	
Batteries?	No		**Explosives?**	No	
Compressed Gases?	No		**PCBs Present?**	No	
Non-Mixed Hazardous Waste Present?	No		**Sealed Containers Over 4L?**	No	

Non-Radionuclide Pyrophoric Materials Present? No

Waste exhibiting the characteristics of Ignitability, Corrosivity or Reactivity Present? No

Wastes Incompatible with backfill, seal and panel closure materials, container and packaging materials,shipping container or other wastes? No

Waste Material Items

Packaging Materials

Material Item	Quantity	Unit	Unit Wt(lbs)	Item Wt(lbs)
90 mil liner	1.000	EACH	16.000	16.000
Drum plastic bag	1.000	EACH	1.000	1.000
Box plastic liner	0.000	EACH	5.000	0.000
O-ring plastic bag in sludge, organic setups, etc.	1.000	EACH	4.000	4.000

Waste Items by Weight

Material Item	Quantity	Unit	Unit Wt(lbs)	Item Wt(lbs)
Cardboard liner (graphite mold waste)	0.000	EACH	4.000	0.000
Fiber pack	0.000	EACH	6.000	0.000
Box fiberboard liner	0.000	EACH	15.000	0.000
55-GAL DRUM (17c)	0.000	EACH	59.000	0.000
Plastic bag for waste	0.000	EACH	0.250	0.000
Lead brick 2 x 4 x 8 in.	0.000	EACH	25.000	0.000
Leaded rubber glove	0.000	EACH	5.500	0.000
Leaded rubber apron	0.000	EACH	5.250	0.000
Drum lead-liner (1/8"x28"x72")(.4lb/in.cubed)	0.000	EACH	100.000	0.000
Drum lead-liner (1/16"x28"x72")	0.000	EACH	50.000	0.000
Poly bottles (1 gal)	0.000	EACH	1.000	0.000

040

SUPERCEDED ERW (12-17-03

AMWTP
Advanced Mixed Waste Treatment Project

BNFL, Inc.

RTR Analysis Report

Date: 26-Nov-2003

Time: 07:11

SUPERCEDED RW 12-17-03

Batch Id RTR03-00066 **Container Id** 10001368 **Analysis Id** 0000001291

Container Type A **Analysis Status** Pass

RTR Date 05-NOV-2003 13:46 **Gross Weight in lbs.** 573.3 **Net Weight in lbs.** 493.3

Equipment Z-213-106 **Waste Matrix Code** S3150 **IDC** RF-004 Special Setups

Recording Id 2RTR03-00055 **Procedure Id** INST-OI-12-R **Revision** 15 **Approval Level** ITR

Is Test Pattern Resolution Ok? Yes **Start Side** A **Replicate** No

Audio Visual Ok? Yes **Closure Date** 12-DEC-1980 00:00 **Operator** GARY PETERSEN

Result Comment THIS DRUM APPEARS TO BE SLUDGE. 1 DRUM BAG AND 1 O-RING BAG. I CALLED OUT VERMICULITE. GDP 11-05-03

Package

IDC Correct Yes **Recommended IDC** **Summary Category Code** S3000

Idc Change Reason

Liner Present? Yes **LinerType** TYPE 2

LinerPunctured? Yes **Sharp Objects Are Protected?** Yes

Fill Factor 80 **LayersOfPacking** 2

Bag Closure Method Twisted and Taped

Liquids

Liquid Present? No **Over One Inch of Liquid** No

Comment

Total Liquid Amount 0 pints **Liquid Between Liner and Drum** 0 pints

Liquid in Bags 0 pints **Containerized Liquid** 0 pints

Contents-Drum or Box

	Value	Comment		Value	Comment
Lead?	No		Mercury Present?	No	
Batteries?	No		Explosives?	No	
Compressed Gases?	No		PCBs Present?	No	
Non-Mixed Hazardous Waste Present?	No		Sealed Containers Over 4L?	No	

Non-Radionuclide Pyrophoric Materials Present? No

Waste exhibiting the characteristics of Ignitability, Corrosivity or Reactivity Present? No

Wastes Incompatible with backfill, seal and panel closure materials, container and packaging materials,shipping container or other wastes? No

Waste Material Items

Packaging Materials

Material Item	Quantity	Unit	Unit Wt(lbs)	Item Wt(lbs)
90 mil liner	1.000	EACH	16.000	16.000
Drum plastic bag	1.000	EACH	1.000	1.000
Box plastic liner	0.000	EACH	5.000	0.000
O-ring plastic bag in sludge, organic setups, etc.	1.000	EACH	4.000	4.000

Waste Items by Weight

Material Item	Quantity	Unit	Unit Wt(lbs)	Item Wt(lbs)
Cardboard liner (graphite mold waste)	0.000	EACH	4.000	0.000
Fiber pack	0.000	EACH	6.000	0.000
Box fiberboard liner	0.000	EACH	15.000	0.000
55-GAL DRUM (17c)	0.000	EACH	59.000	0.000
Plastic bag for waste	0.000	EACH	0.250	0.000
Lead brick 2 x 4 x 8 in.	0.000	EACH	25.000	0.000
Leaded rubber glove	0.000	EACH	5.500	0.000
Leaded rubber apron	0.000	EACH	5.250	0.000
Drum lead-liner (1/8"x28"x72")(.4lb/in.cubed)	0.000	EACH	100.000	0.000
Drum lead-liner (1/16"x28"x72")	0.000	EACH	50.000	0.000
Poly bottles (1 gal)	0.000	EACH	1.000	0.000
Metal can	0.000	EACH	0.500	0.000

040 **SUPERCEDED** RW (12-17-03)

AMWTP
Advanced Mixed Waste Treatment Project

BNFL, Inc.

RTR Analysis Report

Date: 17-Dec-2003

Time: 09:18

Batch Id RTR03-00066 **Container Id** 10001368 **Analysis Id** 0000001291

Drum lead-liner (1/16"x28"x72")	0.000	EACH	50.000	0.000
Poly bottles (1 gal)	0.000	EACH	1.000	0.000
Metal can	0.000	EACH	0.500	0.000

Waste Items by Volume

Material Item	Quantity	Unit	Unit Wt(lbs)	Item Wt(lbs)
Vermiculite (95 gm/liter) .125 lb/pint	0.000	PINTS	0.125	0.000
Oil-Dri (404 gm/liter) 0.42 lb/pint	0.500	PINTS	0.420	0.210

Waste Parameters

Waste Parameter	Remaining Weight %	Actual Weight Lbs
Iron-based Metals/Alloys	0.000	0.000
Aluminum-based Metals/Alloys	0.000	0.000
Other metals	0.000	0.000
Other Inorganic Materials	0.000	0.210
Vitrified	0.000	0.000
Cellulosics	0.000	0.000
Rubber	0.000	0.000
Plastic (Waste Materials)	0.000	0.000
Inorganic matrix	100.000	493.090
Organic matrix	0.000	0.000
Cement (Solidified)	0.000	0.000
Soils/gravel	0.000	0.000
Steel (packaging materials)	0.000	59.000
Plastic (packaging materials)	0.000	21.000

Esignature History

Esig Approval Id	User Id	Esignature Date	Comment
14404	GPETERSEN	15-DEC-2003 12:56	Rework completed. 12-15-03 GDP
10647	GPETERSEN	28-NOV-2003 14:48	REWORK COMPLETE.
7900	GPETERSEN	05-NOV-2003 13:46	

041

AMWTP
Advanced Mixed Waste Treatment Project

BNFL, Inc.

RTR Analysis Report

Date: 01-Dec-2003

Time: 21:20

SUPERCEDED ERW 12-17-03

Batch Id RTR03-00066	Container Id 10001368			Analysis Id 0000001291
Metal can	0.000	EACH	0.500	0.000

Waste Items by Volume

Material Item	Quantity	Unit	Unit Wt(lbs)	Item Wt(lbs)
Vermiculite (95 gm/liter) .125 lb/pint	0.000	PINTS	0.125	0.000
Oil-Dri (404 gm/liter) 0.42 lb/pint	0.000	PINTS	0.420	0.000

Waste Parameters

Waste Parameter	Remaining Weight %	Actual Weight Lbs
Iron-based Metals/Alloys	0.000	0.000
Aluminum-based Metals/Alloys	0.000	0.000
Other metals	0.000	0.000
Other Inorganic Materials	0.000	0.000
Vitrified	0.000	0.000
Cellulosics	0.000	0.000
Rubber	0.000	0.000
Plastic (Waste Materials)	0.000	0.000
Inorganic matrix	100.000	493.300
Organic matrix	0.000	0.000
Cement (Solidified)	0.000	0.000
Soils/gravel	0.000	0.000
Steel (packaging materials)	0.000	59.000
Plastic (packaging materials)	0.000	21.000

Esignature History

Esig Approval Id	User Id	Esignature Date	Comment
10647	GPETERSEN	28-NOV-2003 14:48	REWORK COMPLETE.
7900	GPETERSEN	05-NOV-2003 13:46	

041 SUPERCEDED ERW 12-17-03

AMWTP
Advanced Mixed Waste Treatment Project

BNFL, Inc.

RTR Analysis Report

Date: 26-Nov-2003

Time: 07:11

SUPERCEDED ERW 12-17-03

Batch Id RTR03-00066 **Container Id** 10001368 **Analysis Id** 0000001291

Waste Items by Volume

Material Item	Quantity	Unit	Unit Wt(lbs)	Item Wt(lbs)
Vermiculite (95 gm/liter) .125 lb/pint	24.000	PINTS	0.125	3.000
Oil-Dri (404 gm/liter) 0.42 lb/pint	0.000	PINTS	0.420	0.000

Waste Parameters

Waste Parameter	Remaining Weight %	Actual Weight Lbs
Iron-based Metals/Alloys	0.000	0.000
Aluminum-based Metals/Alloys	0.000	0.000
Other metals	0.000	0.000
Other Inorganic Materials	0.000	3.000
Vitrified	0.000	0.000
Cellulosics	0.000	0.000
Rubber	0.000	0.000
Plastic (Waste Materials)	0.000	0.000
Inorganic matrix	100.000	490.300
Organic matrix	0.000	0.000
Cement (Solidified)	0.000	0.000
Soils/gravel	0.000	0.000
Steel (packaging materials)	0.000	59.000
Plastic (packaging materials)	0.000	21.000

Esignature History

Esig Approval Id	User Id	Esignature Date	Comment
7900	GPETERSEN	05-NOV-2003 13:46	

041 SUPERCEDED ERW 12-17-03

AMWTP Advanced Mixed Waste Treatment Project

BNFL, Inc.

RTR Analysis Report

Date: 26-Nov-2003

Time: 07:11

Batch Id RTR03-00066 **Container Id** 10001369 **Analysis Id** 0000001299

Container Type 001 **Analysis Status** Pass

RTR Date 05-NOV-2003 15:28 **Gross Weight in lbs.** 412.34 **Net Weight in lbs.** 332.34

Equipment Z-213-106 **Waste Matrix Code** S3150 **IDC** RF-004 Special Setups

Recording Id 2RTR03-00055 **Procedure Id** INST-OI-12-R **Revision** 15 **Approval Level** ITR

Is Test Pattern Resolution Ok? Yes **Start Side** A **Replicate** No

Audio Visual Ok? Yes **Closure Date** 12-SEP-1985 00:00 **Operator** DENISE LEE

Result Comment This drum contains sludge,drum bag and o-ring bag. DKL 11/5/03

Package

IDC Correct Yes **Recommended IDC** **Summary Category Code** S3000

Idc Change Reason

Liner Present? Yes **LinerType** TYPE 3

LinerPunctured? Yes **Sharp Objects Are Protected?** Yes

Fill Factor 60 **LayersOfPacking** 2

Bag Closure Method Twisted and Taped

Liquids

Liquid Present? No **Over One Inch of Liquid** No

Comment

Total Liquid Amount 0 pints **Liquid Between Liner and Drum** 0 pints

Liquid in Bags 0 pints **Containerized Liquid** 0 pints

Contents-Drum or Box

	Value	Comment		Value	Comment
Lead?	No		Mercury Present?	No	
Batteries?	No		Explosives?	No	
Compressed Gases?	No		PCBs Present?	No	
Non-Mixed Hazardous Waste Present?	No		Sealed Containers Over 4L?	No	

Non-Radionuclide Pyrophoric Materials Present? No

Waste exhibiting the characteristics of Ignitability, Corrosivity or Reactivity Present? No

Wastes Incompatible with backfill, seal and panel closure materials, container and packaging materials,shipping container or other wastes? No

Waste Material Items

Packaging Materials

Material Item	Quantity	Unit	Unit Wt(lbs)	Item Wt(lbs)
90 mil liner	1.000	EACH	16.000	16.000
Drum plastic bag	1.000	EACH	1.000	1.000
Box plastic liner	0.000	EACH	5.000	0.000
O-ring plastic bag in sludge, organic setups, etc.	1.000	EACH	4.000	4.000

Waste Items by Weight

Material Item	Quantity	Unit	Unit Wt(lbs)	Item Wt(lbs)
Cardboard liner (graphite mold waste)	0.000	EACH	4.000	0.000
Fiber pack	0.000	EACH	6.000	0.000
Box fiberboard liner	0.000	EACH	15.000	0.000
55-GAL DRUM (17c)	0.000	EACH	59.000	0.000
Plastic bag for waste	0.000	EACH	0.250	0.000
Lead brick 2 x 4 x 8 in.	0.000	EACH	25.000	0.000
Leaded rubber glove	0.000	EACH	5.500	0.000
Leaded rubber apron	0.000	EACH	5.250	0.000
Drum lead-liner (1/8"x28"x72")(.4lb/in.cubed)	0.000	EACH	100.000	0.000
Drum lead-liner (1/16"x28"x72")	0.000	EACH	50.000	0.000
Poly bottles (1 gal)	0.000	EACH	1.000	0.000
Metal can	0.000	EACH	0.500	0.000

AMWTP
Advanced Mixed Waste Treatment Project

BNFL, Inc.

RTR Analysis Report

Date: 26-Nov-2003

Time: 07:11

Batch Id RTR03-00066 **Container Id** 10001369 **Analysis Id** 0000001299

Waste Items by Volume

Material Item	Quantity	Unit	Unit Wt(lbs)	Item Wt(lbs)
Vermiculite (95 gm/liter) .125 lb/pint	0.000	PINTS	0.125	0.000
Oil-Dri (404 gm/liter) 0.42 lb/pint	0.000	PINTS	0.420	0.000

Waste Parameters

Waste Parameter	Remaining Weight %	Actual Weight Lbs
Iron-based Metals/Alloys	0.000	0.000
Aluminum-based Metals/Alloys	0.000	0.000
Other metals	0.000	0.000
Other Inorganic Materials	0.000	0.000
Vitrified	0.000	0.000
Cellulosics	0.000	0.000
Rubber	0.000	0.000
Plastic (Waste Materials)	0.000	0.000
Inorganic matrix	100.000	332.340
Organic matrix	0.000	0.000
Cement (Solidified)	0.000	0.000
Soils/gravel	0.000	0.000
Steel (packaging materials)	0.000	59.000
Plastic (packaging materials)	0.000	21.000

Esignature History

Esig Approval Id	User Id	Esignature Date	Comment
7915	DLEE	05-NOV-2003 15:28	

AMWTP
Advanced Mixed Waste Treatment Project

BNFL, Inc.

RTR Analysis Report

Date: 26-Nov-2003
Time: 07:11

Batch Id RTR03-00066 **Container Id** 10001370 **Analysis Id** 0000001297

Container Type A **Analysis Status** Pass
RTR Date 05-NOV-2003 15:16 **Gross Weight in lbs.** 665.91 **Net Weight in lbs.** 585.91
Equipment Z-213-106 **Waste Matrix Code** S3150 **IDC** RF-004 Special Setups
Recording Id 2RTR03-00055 **Procedure Id** INST-OI-12-R **Revision** 15 **Approval Level** ITR
Is Test Pattern Resolution Ok? Yes **Start Side** A **Replicate** No
Audio Visual Ok? Yes **Closure Date** 10-OCT-1980 00:00 **Operator** DENISE LEE
Result Comment This drum contains sludge, oil dri,drum bag and o-ring bag. DKL 11/5/03

Package

IDC Correct Yes **Recommended IDC** **Summary Category Code** S3000
Idc Change Reason

Liner Present? Yes **LinerType** TYPE 2
LinerPunctured? Yes **Sharp Objects Are Protected?** Yes
Fill Factor 90 **LayersOfPacking** 2
Bag Closure Method Twisted and Taped

Liquids

Liquid Present? No **Over One Inch of Liquid** No
Comment
Total Liquid Amount 0 pints **Liquid Between Liner and Drum** 0 pints
Liquid in Bags 0 pints **Containerized Liquid** 0 pints

Contents-Drum or Box

	Value	Comment		Value	Comment
Lead?	No		Mercury Present?	No	
Batteries?	No		Explosives?	No	
Compressed Gases?	No		PCBs Present?	No	
Non-Mixed Hazardous Waste Present?	No		Sealed Containers Over 4L?	No	

Non-Radionuclide Pyrophoric Materials Present? No
Waste exhibiting the characteristics of Ignitability, Corrosivity or Reactivity Present? No
Wastes Incompatible with backfill, seal and panel closure materials, container and packaging materials,shipping container or other wastes? No

Waste Material Items

Packaging Materials

Material Item	Quantity	Unit	Unit Wt(lbs)	Item Wt(lbs)
90 mil liner	1.000	EACH	16.000	16.000
Drum plastic bag	1.000	EACH	1.000	1.000
Box plastic liner	0.000	EACH	5.000	0.000
O-ring plastic bag in sludge, organic setups, etc.	1.000	EACH	4.000	4.000

Waste Items by Weight

Material Item	Quantity	Unit	Unit Wt(lbs)	Item Wt(lbs)
Cardboard liner (graphite mold waste)	0.000	EACH	4.000	0.000
Fiber pack	0.000	EACH	6.000	0.000
Box fiberboard liner	0.000	EACH	15.000	0.000
55-GAL DRUM (17c)	0.000	EACH	59.000	0.000
Plastic bag for waste	0.000	EACH	0.250	0.000
Lead brick 2 x 4 x 8 in.	0.000	EACH	25.000	0.000
Leaded rubber glove	0.000	EACH	5.500	0.000
Leaded rubber apron	0.000	EACH	5.250	0.000
Drum lead-liner (1/8"x28"x72")(.4lb/in.cubed)	0.000	EACH	100.000	0.000
Drum lead-liner (1/16"x28"x72")	0.000	EACH	50.000	0.000
Poly bottles (1 gal)	0.000	EACH	1.000	0.000
Metal can	0.000	EACH	0.500	0.000

AMWTP
Advanced Mixed Waste Treatment Project

BNFL, Inc.

RTR Analysis Report

Date: 26-Nov-2003

Time: 07:11

Batch Id RTR03-00066 **Container Id** 10001370 **Analysis Id** 0000001297

Waste Items by Volume

Material Item	Quantity	Unit	Unit Wt(lbs)	Item Wt(lbs)
Vermiculite (95 gm/liter) .125 lb/pint	0.000	PINTS	0.125	0.000
Oil-Dri (404 gm/liter) 0.42 lb/pint	24.000	PINTS	0.420	10.080

Waste Parameters

Waste Parameter	Remaining Weight %	Actual Weight Lbs
Iron-based Metals/Alloys	0.000	0.000
Aluminum-based Metals/Alloys	0.000	0.000
Other metals	0.000	0.000
Other Inorganic Materials	0.000	10.080
Vitrified	0.000	0.000
Cellulosics	0.000	0.000
Rubber	0.000	0.000
Plastic (Waste Materials)	0.000	0.000
Inorganic matrix	100.000	575.830
Organic matrix	0.000	0.000
Cement (Solidified)	0.000	0.000
Soils/gravel	0.000	0.000
Steel (packaging materials)	0.000	59.000
Plastic (packaging materials)	0.000	21.000

Esignature History

Esig Approval Id	User Id	Esignature Date	Comment
7913	DLEE	05-NOV-2003 15:16	

End of RTR Analysis Report

AMWTP
Advanced Mixed Waste Treatment Project

BNFL, Inc.

RTR Replicate Comparison Report

Date: 01-Dec-2003

Time: 21:20

RTR Batch Id: RTR03-00066 **Container Id:** 10001233 **Equipment Id:** Z-213-106

Container type Description: drum, 55 Gallon Drum (17H) Gen-IDC: RF-004 Gross Weight(Lbs): 608.58

	Original Analysis		Replicate Analysis	
Analysis Id / Date:	0000001307	06-NOV-2003 09:29	0000001310	06-NOV-2003 11:45
Procedure Id/Revision:	INST-OI-12-R	15	INST-OI-12-R	15
Recording Media Id:	2RTR03-00055		2RTR03-00055	
Starting : Ending Position:	B	2	B	2
Is Test Pattern Resolution Ok?	Y		Y	
Audio Visual Ok?	Y		Y	
Personnel Name:	GARY PETERSEN		SHAWN JORDAN	
IDC Ok? / Recommended IDC:	Y		Y	
IDC Change Reason:				
Summary Category / Waste matrix Code:	S3000	S3150	S3000	S3150
Packaging				
Liner Present?	Y		Y	
Liner Type Code:	TYPE 2		TYPE 2	
Liner Punctured:	Y		Y	
Layers Of Packaging:	2		2	
Sharp Objects Protected?	Y		Y	
Fill Factor(%):	85		85	
Bag Closure Method:	Twisted and Taped		Twisted and Taped	
Liquids: (Volume in Pints)				
Liquid Present?	N		N	
Liquid in Bags:	0		0	
Liquid Between Liner and Drums:	0		0	
Containerized Liquid:	0		0	
Total Liquid Amount:	0		0	

Contents:	Y/N	Comments	Y/N	Comments
Sealed Containers over 4L?	N		N	
Over One Inch Liquid?	N		N	
Lead Present?	N		N	
Explosives Present?	N		N	
Mercury Present?	N		N	
Batteries Detected?	N		N	
Compressed Gas Present?	N		N	
Items With PCB?	N		N	

Signature: _____ Date: 12-7-03

AMWTP
Advanced Mixed Waste Treatment Project

BNFL, Inc.

Date: 26-Nov-2003

RTR Replicate Comparison Report

Time: 07:12

SUPERCEDED CRW 12-17-03

RTR Batch Id: RTR03-00066 **Container Id:** 10001233 **Equipment Id:** Z-213-106

Container type Description: drum, 55 Gallon Drum (17H) Gen-IDC: RF-004 Gross Weight(Lbs): 608.58

	Original Analysis		Replicate Analysis	
Analysis Id / Date:	0000001307	06-NOV-2003 09:29	0000001310	06-NOV-2003 11:45
Procedure Id/Revision:	INST-OI-12-R	15	INST-OI-12-R	15
Recording Media Id:	2RTR03-00055		2RTR03-00055	
Starting : Ending Position:	B	2	B	2
Is Test Pattern Resolution Ok?	Y		Y	
Audio Visual Ok?	Y		Y	
Personnel Name:	GARY PETERSEN		SHAWN JORDAN	
IDC Ok? / Recommended IDC:	Y		Y	
IDC Change Reason:				
Summary Category / Waste matrix Code:	S3000	S3150	S3000	S3150
Packaging				
Liner Present?	Y		Y	
Liner Type Code:	TYPE 2		TYPE 2	
Liner Punctured:	Y		Y	
Layers Of Packaging:	2		2	
Sharp Objects Protected?	Y		Y	
Fill Factor(%):	85		85	
Bag Closure Method:	Twisted and Taped		Twisted and Taped	
Liquids: (Volume in Pints)				
Liquid Present?	N		N	
Liquid in Bags:	0		0	
Liquid Between Liner and Drums:	0		0	
Containerized Liquid:	0		0	
Total Liquid Amount:	0		0	

Contents:	Y/N	Comments	Y/N	Comments
Sealed Containers over 4L?	N		N	
Over One Inch Liquid?	N		N	
Lead Present?	N		N	
Explosives Present?	N		N	
Mercury Present?	N		N	
Batteries Detected?	N		N	
Compressed Gas Present?	N		N	
Items With PCB?	N		N	

Signature: _____ Date: 12-17-03

046 SUPERCEDED CRW 12-17-03

AMWTP
Advanced Mixed Waste Treatment Project

BNFL, Inc.

RTR Replicate Comparison Report

Date: 01-Dec-2003

Time: 21:20

RTR Batch Id: RTR03-00066 **Container Id:** 10001233 **Equipment Id:** Z-213-106

	Original Analysis	Replicate Analysis
Non-Radionuclide Pyrophoric Materials Present?	N	N

Contents:	Y/N	Comments	Y/N	Comments
Waste exhibiting the characteristics of ignitability, Corrosivity or reactivity Present?	N		N	
Non-Mixed Hazardous Waste Present?	N		N	
Waste Incompatibles with backfill, Seal and panel closure materials, container and packaging material, shipping container or other wastes?	N		N	
Analysis Result Comment:		THIS IS A REWORK DRUM. THIS DRUM APPEARS TO BE SLUDGE, ONE DRUM BAG, ONE O-RING BAG, AND APROX. 3 GALLONS VERMICULITE. NO PROHIBITED ITEMS. GDP 11-06-03 { AFTER REVIEW OF THE RECORDING,FOR REWORK, THE VERMICULITE THAT I CALLED OUT WAS ACTUALLY PART OF THE WASTE } GDP 11-28-03		THIS IS A REPLICATE EXAM . THIS DRUM IS A REWORK DRUM. THIS DRUM CONTAINS A DRUM BAG, A O-RING BAG.THE REST OF THE WASTE APPEARS TO BE SLUDGE. NO PROHIBITED ITEMS FOUND. SJ 11-06-03

Waste Parameters	Original Weight(lbs)	Replicate Weight(lbs)	RPD Weight
Iron-based Metals/Alloys	0	0	0.0000
Aluminum-based Metals/Alloys	0	0	0.0000
Other metals	0	0	0.0000
Other Inorganic Materials	0	0	0.0000
Vitrified	0	0	0.0000
Cellulosics	0	0	0.0000
Rubber	0	0	0.0000
Plastic (Waste Materials)	0	0	0.0000
Inorganic matrix	528.58	528.58	0.0000
Organic matrix	0	0	0.0000
Cement (Solidified)	0	0	0.0000
Soils/gravel	0	0	0.0000
Steel (packaging materials)	59	59	0.0000
Plastic (packaging materials)	21	21	0.0000

-----End of RTR Replicate Comparison Report-----

Signature: _____ Date: 12-17-03

AMWTP
Advanced Mixed Waste Treatment Project

BNFL, Inc. **Date:** 26-Nov-2003

RTR Replicate Comparison Report **Time:** 07:12

SUPERCEDED ERW 12-17-03

RTR Batch Id: RTR03-00066 **Container Id:** 10001233 **Equipment Id:** Z-213-106

	Original Analysis	Replicate Analysis
Non-Radionuclide Pyrophoric Materials Present?	N	N

Contents:	Y/N	Comments	Y/N	Comments
Waste exhibiting the characteristics of ignitability, Corrosivity or reactivity Present?	N		N	
Non-Mixed Hazardous Waste Present?	N		N	
Waste Incompatibles with backfill, Seal and panel closure materials, container and packaging material, shipping container or other wastes?	N		N	
Analysis Result Comment:		THIS IS A REWORK DRUM. THIS DRUM APPEARS TO BE SLUDGE, ONE DRUM BAG, ONE O-RING BAG, AND APROX. 3 GALLONS VERMICULITE. NO PROHIBITED ITEMS. GDP 11-06-03		THIS IS A REPLICATE EXAM . THIS DRUM IS A REWORK DRUM. THIS DRUM CONTAINS A DRUM BAG, A O-RING BAG.THE REST OF THE WASTE APPEARS TO BE SLUDGE. NO PROHIBITED ITEMS FOUND. SJ 11-06-03

Waste Parameters	Original Weight(lbs)	Replicate Weight(lbs)	RPD Weight
Iron-based Metals/Alloys	0	0	0.0000
Aluminum-based Metals/Alloys	0	0	0.0000
Other metals	0	0	0.0000
Other Inorganic Materials	3	0	200.0000
Vitrified	0	0	0.0000
Cellulosics	0	0	0.0000
Rubber	0	0	0.0000
Plastic (Waste Materials)	0	0	0.0000
Inorganic matrix	525.58	528.58	0.5692
Organic matrix	0	0	0.0000
Cement (Solidified)	0	0	0.0000
Soils/gravel	0	0	0.0000
Steel (packaging materials)	59	59	0.0000
Plastic (packaging materials)	21	21	0.0000

-----End of RTR Replicate Comparison Report-----

Signature: Ebby R Walls **Date:** 12-17-03

047 SUPERCEDED ERW 12-17-03

RTR03-00066

634 Characterization Temperature

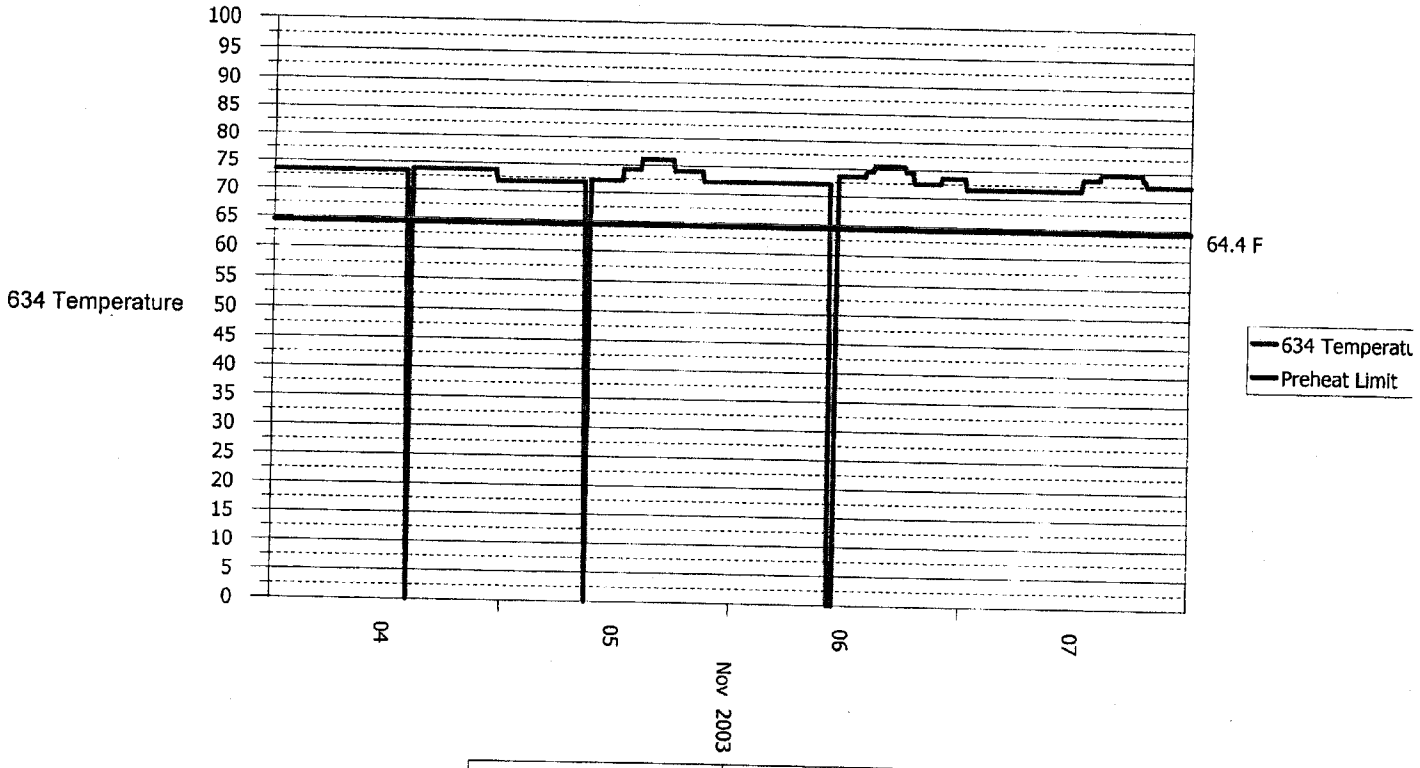

Start Date	End Date
04-NOV-03	08-NOV-03

AMWTP Advanced Mixed Waste Treatment Project

RTR Status Log

AMWTP Form-1374 Rev: 1
Implementing Document: INST-OI-12
Effective Date: 10/22/03
Page 1 of 2

Page Number: 03-4159 **Date:** 11-5-03

RTR: 101 / 106 RTR03-00066 **Shift:** Days / Nights

Operator	Time In	Time Out	Operator	Time In	Time Out
[signature]	0630	1250	Denise K Lee	1033	1150
[signature]	0645	1250	Denise K Lee	1250	1550
[signature]	1600	1747	[signature]	1300	1845
			Denise K Lee	1820	1845

Note: Operator signature above acknowledges that personnel have reviewed all applicable logs from the previous 24 hours and have reviewed the Precautions and Limitations for applicable operations.

Completion of LCO 3.1 Surveillances		
SR 4.1.1 Daily Safety Checks ✓	Time Performed: 0716	Date Performed: 11-5-03
SR 4.1.2 Semi-Annual Safety Checks ✓	Due Date: 2-13-04	
SR 4.1.3 Semi-Annual Radiation Survey of Shielding ✓	Due Date: 4-14-04	

Image Resolution: 16 lines kV: 74 mA: 1.0 Completion Time: 0815

Brightness: 128 Contrast: 128 Magnification: C Focus: Broad / Fine

Pre-Operation Warm-up: Required / Not Required Warm-up Completion Time: 0714

Warm-up Elapsed Time: 19 10

End of Shift Status

Batch Number RTR03-00066 **Number of Drums in the Batch** 11

Replicate Completed For The Batch: YES / NO Drum ID _____

OIO Completed For The Batch: YES / NO Drum ID 10001321

Image Quality Recorded For The Shift YES / NO RTR Disc ID RTR03-00054

RTR Set Up For: BOXES / DRUMS **Drums Needed to be Examined:** ~~1 2 3 4~~

RTR Brought To Full Power This Shift: YES / NO

Comments: (i.e. Safety Items, Equipment Tagged Out, Procedure Changes)
Running production Rem Kdrums. The DRUMS on CART are complete but you can use any of them For a Replicate etc

On-Coming: [signature] Signature Off-Going: Denise K Lee Signature

Page Number: 03-460 RTR03-00066 **Date:** 11-5-03

RTR Narrative Log

Time	Narrative
0630	Operator Shawn Jordan Stationed at RTR106.
0706	System Power-up
0716	Daily Safety Checks Completed and SAT
0744	Auto Command Complete
0815	IQT completed and Sat
0830	WTS will be down For a patch Fix.
0855	WTS back on line. Running Rework production Drums
0907	Rework drum 10000080 / wippaccept
0930	Rework Drum 10000558 wipp accept
0959	Rework Drum 10000110 wippaccept
1033	Rework Drum 10000547 wippaccept
1100	Turn over to Denise Lee to do the Replicate and OIO For- Batch RTR03-00065 DRC
1107	Rework Replicate 10000558 DRC
1132	OIO 10000110 complete DRC
1130	~~Turn over~~ DRC 11-5-03 Turn back over to Shawn J. DRC
1150	Rework Drum 10000560 wippaccept. Completed Rework Drums Closing out Batch RTR03-00065.
1240	New Disk 2 RTR03-00055.
1250	Turn backover to Operator Denise Lee DRC
1254	Drum #10001362 wipp Open Batch RTR03-00066 DRC
1315	Rework Drum #10001368 WIPP
1350	Rework Drum #10001230 WIPP DRC
1410	Drum Change out DRC
1432	Rework Drum #10001357 WIPP DRC
1453	Rework Drum # 10001360 WIPP DRC
1506	Rework Drum # 10001370 WIPP DRC
1520	Rework Drum # 10001369 WIPP DRC
1532	Drum Change Out DRC
1550	Turn back over to Operator Shawn Jordan
1600	Running Production Rework drums. Operator Shawn Jordan Relieving Denise Lee on RTR106
1628	Rework Drum 10001322 wippaccept
1721	Rework Drum 10001324 wippaccept
1745	SRL reviewed Logs OBaxter
1746	Logs Continued on Page 03-461

Instructions:
Completed Status Logs shall be retained as a part of the RTR Narrative Log.
A new Status Log shall be completed at the end/beginning of each shift.
Each page shall be numbered consecutively using the following format YR-XXX, (e.g. 03-001 through 03-999)
If additional narrative sheets are needed, this page (RTR Narrative Log) should be copied to both the front and back of a single sheet of paper.
A new record shall be started on the first day of each year.

RTR Status Log

Page Number: 03-461 RTR03-00066 **Date:** 11-5-03

RTR Narrative Log

Time	Narrative
1746	Continuing log from page 03-460
1747	Rework Drum 10001321 ship accept
1880	OIO Done on DRum 10001321 For Batch RTR03-000606 11-5-03 Done by
	Operator Denise Cox
1843	System Shutdown per OI 12 Rev 15
1845	Last Log Entry

Denise Cox 11/5/03

Instructions:
Completed Status Logs shall be retained as a part of the RTR Narrative Log.
A new Status Log shall be completed at the end/beginning of each shift.
Each page shall be numbered consecutively using the following format YR-XXX, (e.g. 03-001 through 03-999)
If additional narrative sheets are needed, this page (RTR Narrative Log) should be copied to both the front and back of a single sheet of paper.
A new record shall be started on the first day of each year.

AMWTP Advanced Mixed Waste Treatment Project

RTR Status Log

AMWTP Form-1374 Rev: 1
Implementing Document: INST-OI-12
Effective Date: 10/22/03
Page 1 of 2

Page Number: 03-462 RTR03-00066 **Date:** 11-6-03

RTR: 101 / (106) **Shift:** (Days) / Nights

Operator	Time In	Time Out	Operator	Time In	Time Out
Jay D. Peterson	0630	1045	Jay D. Peterson	1230	1500
Travis Thompson	0630	1800	Shawn Gordon	1500	1800
Cassidy Tripp	0658	1800			
Shawn Gordon	1100	1230			

Note: Operator signature above acknowledges that personnel have reviewed all applicable logs from the previous 24 hours and have reviewed the Precautions and Limitations for applicable operations.

Completion of LCO 3.1 Surveillances		
SR 4.1.1 Daily Safety Checks	Time Performed: 0728	Date Performed: 11-6-03
SR 4.1.2 Semi-Annual Safety Checks	Due Date: 2-13-04	
SR 4.1.3 Semi-Annual Radiation Survey of Shielding	Due Date: 4-14-04	

Image Resolution: 1616 x 1232 kV: 66 mA: 0.9 Completion Time: 0815

Brightness: 128 Contrast: 128 Magnification: 0 Focus: (Broad) / Fine

Pre-Operation Warm-up: (Required) / Not Required Warm-up Completion Time: 0756

Warm-up Elapsed Time: 19:13

End of Shift Status

Batch Number RTR03-00066 **Number of Drums in the Batch** 2

New Batch RTR03-00072

Replicate Completed For The Batch: (YES) / NO Drum ID 1000123 3 (Batch 66)

OIO Completed For The Batch: (YES) / NO Drum ID 1000132 (Batch 66)

Image Quality Recorded For The Shift (YES) / NO RTR Disc ID 2RTR03-00055

New RTR Disc 2RTR03-00056

RTR Set Up For: BOXES / (DRUMS) **Drums Needed to be Examined:** 1 2 3 (4) CT 11-6-03

RTR Brought To Full Power This Shift: (YES) / NO

Comments: (i.e. Safety Items, Equipment Tagged Out, Procedure Changes)

All Drums on Cart have not been examined. CT 11-6-03

Batch 00066 is closed, New Batch 00072 has two drums ran on it. CT 11-06-03

On-Coming: _____ Signature Off-Going: _____ Signature

AMWTP Advanced Mixed Waste Treatment Project

RTR Status Log

AMWTP Form-1374 Rev: 1
Implementing Document: INST-OI-12
Effective Date: 10/22/03

Page Number: 03-463 RTR03-00066 **Date:** 11-6-03

RTR Narrative Log

Time	Narrative
0630	OPERATOR GARY PETERSEN HAS READ AND UNDERSTANDS Logs AND CURRENT CONDITIONS ON RTR 106.
0716	System Power up complete per OI 12 Rev 15.
0756	Daily Safety Checks complete and Sat
0756	Auto warm up complete.
0815	IGI Recording Complete and Sat
0835	RUNNING REWORK DRUM # 10001334 WIPP ACCEPT WIPP BATCH # 00066
0905	RUNNING REWORK DRUM # 10001233 W.PP ACCEPT WIPP
0940	RUNNING REWORK DRUM # 10001238 Wipp Accept
1100	Operator Shawn Jordan assuming control of RTR 106
1120	Rework Drum 10001320 Wippaccept
1123	Running Replicate exam For drum 10001233
1200	Changing out drums on Cart
1227	Drum 10001365 (REWORK)
1230	OPERATOR GARY PETERSEN REASSUMING Control of RTR 106
1240	RUNNING REWORK DRUM # 10001365 WIPP
1300	RUNNING REWORK DRUM # 10001227 W.PP WIPP
1320	RUNNING DRUM # 10001226 (REWORK) WIPP WIPP
1404	Running Drum # 10001238 (Rework) Wipp accentable
1500	Operator Shawn Jordan Relieving Gary Petersen on RTR 106.
1515	Rework Drum 10001237 wippaccept.
1518	Rework Drum 10001236 wippaccept After completing Drum 10001236 it Finished batch 066. When I selected next drum new batch went to 072. Contacted CTL bene Simmons and he told me to Continue Running Rework drums
1549	Rework Drum 10001332 wippaccept. New Batch is RTR03-00072
1616	Rework Drum 10001333 wipp accept
1635	STL Log Review EOS
1645	Changed out Drums on Cart
1745	Total System Shutdown
1746	Last entry this Page.
	11-6-03

Instructions:
Completed Status Logs shall be retained as a part of the RTR Narrative Log.
A new Status Log shall be completed at the end/beginning of each shift.
Each page shall be numbered consecutively using the following format YR-XXX. (e.g. 03-001 through 03-999)
If additional narrative sheets are needed, this page (RTR Narrative Log) should be copied to both the front and back of a single sheet of paper.
A new record shall be started on the first day of each year.

AMWTP
Advanced Mixed Waste Treatment Project

Real-Time Radiography

Independent Technical Reviewer Checklist REV. 2
ERW 2-3-04

Testing Batch No.: RTR03-00066	**RTR System ID: Z-213-106**
ITR Print Name: Eddy R Walters	**Date: 2-3-04**
ITR Signature: Eddy R Walters	**Date: 2-3-04**

Criteria	Yes	No	NA	Comment
RTR Examination				
1. Were all drums preheated for a minimum of 72 hours at 18 degrees Centigrade or higher?	X			On 11-06-03 their where two temperature fluctuations the first at 10:16 - 10:18 for 2 minutes and the second at 10:45 - 10:46 for 1 minute. Both temperature devices were at zero for these times. Before and after these fluctuations the temperature was 18 degrees C. There were no other temperature fluctuations during the time frame in question.
2. Do all drums in the batch have a complete scan (100% of each waste container)?	X			
3. Was the imaging quality indicator check valid and was it documented for every shift that data was generated for the batch?	X			
4. Does every drum reported in the batch have a valid audio/video recording and is the location correctly identified on the drum data report?	X			

Hold 2 ERW 2/1/04

AMWTP
Advanced Mixed Waste Treatment Project

Real-Time Radiography

Independent Technical Reviewer Checklist REV. 2
ERW 2-3-04

Criteria	Yes	No	NA	Comment
5. Does the physical form match the waste stream description and waste matrix code?	X			
6. Did this require an IDC, Waste Matrix Code, and/or waste stream change? If so, was an NCR initiated?		X		
7. Were the waste material parameters documented correctly?	X			
8. Was the presence or absence of prohibited items properly identified?	X			
Data Validation and Reporting				
9. Are all changes to original data or forms made by a single line through incorrect entry, initialed, and dated by the person making the change?	X			
10. Was the data reviewed for changes and adequate justifications made?	X			
11. Have all hand calculations and unit conversions performed on the waste material parameters or liquid volumes been verified and validated?	X			
12. Were all proper units and significant figures used for all reported volumes/weights?	X			
13. Has the data been reviewed for transcription errors as appropriate?	X			
14. Was the data generated in a technically correct manner in accordance with INST-OI-12, *Real-Time Radiography Operations*?	X			
15. When applicable, are all data signed and dated in black ink, labeled with the batch number and each page numbered?	X			
Quality Control				

Eddy R Walt 2-3-04
RTR03-00066

055

AMWTP
Advanced Mixed Waste Treatment Project

Real-Time Radiography

Independent Technical Reviewer Checklist REV. 2
ERW 2-3-04

Criteria	Yes	No	NA	Comment
16. Did personnel having current qualifications perform all RTR examinations?	X			
17. Was a replicate scan performed by an independent operator on at least one drum per day or once per batch, whichever is less frequent? Record comparison results for both the original and replicate scans in the comment section.	X			Ref. checklist comments Rev.0
18. Was an independent observation (not the replicate) performed by qualified operator other than the individual who performed the first examination on at least one container in this batch? Record the container number, date of observation and any issues or concerns in the comment section.	X			Drum ID 10001321 IO was completed 11-05-03 by Denise Lee and does agree with the operator.
19. Did the operator correctly record the RTR examination information noted during the audio/video recording? If no, record the observation in the comment section.	X			
20. Were proper procedures (current revision) used to generate the data in this batch?	X			
21. Is the QA documentation for the Batch Data Reports complete and does it include data reports and QC results?	X			
22. Were there any nonconforming conditions identified which affect data quality? If so indicate all NCR numbers in the comment section.		X		No NCR's generated
23. Are all NCRs closed?			X	

Comments: Promoted to TS level. This batch was validated to MP-TRUW-8.8, Rev 7.

Ebby R Walt 2-3-04

RTR03-00066

056

AMWTP
Advanced Mixed Waste Treatment Project

Real-Time Radiography

Independent Technical Reviewer Checklist REV. 1
ERW 12-17-03

Testing Batch No.: RTR03-00066	**RTR System ID: Z-213-106**
ITR Print Name: Eddy R Walters	**Date: 12-17-03**
ITR Signature: E R Walters	**Date: 12-17-03**

Criteria	Yes	No	NA	Comment
RTR Examination				
1. Were all drums preheated for a minimum of 72 hours at 18 degrees Centigrade or higher?	X			On 11-06-03 their where two temperature fluctuations the first at 10:16 - 10:18 for 2 minutes and the second at 10:45 - 10:46 for 1 minute. Both temperature devices were at zero for these times. Before and after these fluctuations the temperature was 18 degrees C. There were no other temperature fluctuations during the time frame in question.
2. Do all drums in the batch have a complete scan (100% of each waste container)?	X			
3. Was the imaging quality indicator check valid and was it documented for every shift that data was generated for the batch?	X			
4. Does every drum reported in the batch have a valid audio/video recording and is the location correctly identified on the drum data report?	X			

057

Criteria	Yes	No	NA	Comment
5. Does the physical form match the waste stream description and waste matrix code?	X			
6. Did this require an IDC, Waste Matrix Code, and/or waste stream change? If so, was an NCR initiated?		X		
7. Were the waste material parameters documented correctly?	X			
8. Was the presence or absence of prohibited items properly identified?	X			
Data Validation and Reporting				
9. Are all changes to original data or forms made by a single line through incorrect entry, initialed, and dated by the person making the change?	X			
10. Was the data reviewed for changes and adequate justifications made?	X			
11. Have all hand calculations and unit conversions performed on the waste material parameters or liquid volumes been verified and validated?	X			
12. Were all proper units and significant figures used for all reported volumes/weights?	X			
13. Has the data been reviewed for transcription errors as appropriate?	X			
14. Was the data generated in a technically correct manner in accordance with INST-OI-12, *Real-Time Radiography Operations*?	X			
15. When applicable, are all data signed and dated in black ink, labeled with the batch number and each page numbered?	X			
Quality Control				

Edby R Walls 12-17-03
RtR 03-00066

Real-Time Radiography

Independent Technical Reviewer Checklist REV. 1 ERW 12-17-03

Criteria	Yes	No	NA	Comment
16. Did personnel having current qualifications perform all RTR examinations?	X			
17. Was a replicate scan performed by an independent operator on at least one drum per day or once per batch, whichever is less frequent? Record comparison results for both the original and replicate scans in the comment section.	X			After review of the original and replicate comparisons all parameters were in agreement between the original and replicate. I agree with the original operators assessment. ERW 2-3-04 REF. CHECKLIST COMMENTS REV.0 ERW 2-3-04
18. Was an independent observation (not the replicate) performed by qualified operator other than the individual who performed the first examination on at least one container in this batch? Record the container number, date of observation and any issues or concerns in the comment section.	X			Drum ID 10001321 IO was completed 11-05-03 by Denise Lee and does agree with the operator.
19. Did the operator correctly record the RTR examination information noted during the audio/video recording? If no, record the observation in the comment section.	X			
20. Were proper procedures (current revision) used to generate the data in this batch?	X			
21. Is the QA documentation for the Batch Data Reports complete and does it include data reports and QC results?	X			
22. Were there any nonconforming conditions identified which affect data quality? If so indicate all NCR numbers in the comment section.		X		No NCR's generated
23. Are all NCRs closed?			X	

Comments: Promoted to TS level.

E R Walter 12-17-03

RTR03-00066

059

AMWTP
Advanced Mixed Waste Treatment Project

Real-Time Radiography

Independent Technical Reviewer Checklist REV. 0
ERW 11-26-03

Testing Batch No.: RTR03-00066	**RTR System ID: Z-213-106**
ITR Print Name: Eddy R Walters	**Date: 11-26-03**
ITR Signature: Eddy R Walters	**Date: 11-26-03**

Criteria	Yes	No	NA	Comment
RTR Examination				
1. Were all drums preheated for a minimum of 72 hours at 18 degrees Centigrade or higher?	X			On 11-06-03 their where two temperature fluctuations the first at 10:16 - 10:18 for 2 minutes and the second at 10:45 - 10:46 for 1 minute. Both temperature devices were at zero for these times. Before and after these fluctuations the temperature was 18 degrees C. There were no other temperature fluctuations during the time frame in question.
2. Do all drums in the batch have a complete scan (100% of each waste container)?	X			
3. Was the imaging quality indicator check valid and was it documented for every shift that data was generated for the batch?	X			
4. Does every drum reported in the batch have a valid audio/video recording and is the location correctly identified on the drum data report?	X			

090

Criteria	Yes	No	NA	Comment
5. Does the physical form match the waste stream description and waste matrix code?	X			
6. Did this require an IDC, Waste Matrix Code, and/or waste stream change? If so, was an NCR initiated?		X		
7. Were the waste material parameters documented correctly?	X			
8. Was the presence or absence of prohibited items properly identified?	X			
Data Validation and Reporting				
9. Are all changes to original data or forms made by a single line through incorrect entry, initialed, and dated by the person making the change?	X			
10. Was the data reviewed for changes and adequate justifications made?		X		Ref. Items 1 and 5 of batch comment form
11. Have all hand calculations and unit conversions performed on the waste material parameters or liquid volumes been verified and validated?	X			
12. Were all proper units and significant figures used for all reported volumes/weights?	X			
13. Has the data been reviewed for transcription errors as appropriate?	X			
14. Was the data generated in a technically correct manner in accordance with INST-OI-12, *Real-Time Radiography Operations*?	~~X~~ ERW 11-26-03	X		Ref. Items 1 and 5 of batch comment form
15. When applicable, are all data signed and dated in black ink, labeled with the batch number and each page numbered?	X			
Quality Control				

Eddy R White 11-26-03
RTR03-00066

061

Real-Time Radiography

Independent Technical Reviewer Checklist REV. 0

ERW 11-26-03

Criteria	Yes	No	NA	Comment
16. Did personnel having current qualifications perform all RTR examinations?	X			
17. Was a replicate scan performed by an independent operator on at least one drum per day or once per batch, whichever is less frequent? Record comparison results for both the original and replicate scans in the comment section.	X			After review of the original and replicate recordings and comparison reports the original report lists 3 gallons of vermiculite The replicate does not list any absorbents all other parameters were in agreement.
18. Was an independent observation (not the replicate) performed by qualified operator other than the individual who performed the first examination on at least one container in this batch? Record the container number, date of observation and any issues or concerns in the comment section.	X			Drum ID 10001321 IO was completed 11-05-03 by Denise Lee and does agree with the operator.
19. Did the operator correctly record the RTR examination information noted during the audio/video recording? If no, record the observation in the comment section.		X		Ref. Items 1 and 5 of batch comment form
20. Were proper procedures (current revision) used to generate the data in this batch?	X			
21. Is the QA documentation for the Batch Data Reports complete and does it include data reports and QC results?	X			
22. Were there any nonconforming conditions identified which affect data quality? If so indicate all NCR numbers in the comment section.		X		No NCR's generated
23. Are all NCRs closed?	~~X~~ ERW 11-26-03		X	

Comments: Demoted to operations for re-work

Edgar Walter 11-26-03

RTR03-00066

062

AMWTP
Advanced Mixed Waste Treatment Project

Real-Time Radiography

Technical Supervisor Checklist Rev 0 JM 2-4-04

Testing Batch No.: RTR03-00066	**RTR System ID: Z-213-106**
TS Print Name: D. Marquardt	**Date: 2-04-04**
TS Signature: D. Marquardt	**Date: 2-04-04**

Criteria	Yes	No	Comment
1. Does the contents of the waste container confirm the IDC, waste matrix code and waste stream?	X		
2. Did the operator recommend any IDC, Waste Matrix Code, waste stream change and were they evaluated and documented on a NCR as appropriate? If yes, record the waste container(s) and NCR in the comment section.		X	
3. Was the data reviewed for changes and adequate justifications made?	X		
4. Was the data generated in a technically correct manner in accordance with INST-OI-12, *Real-Time Radiography Operations*?	X		
Quality Control			
5. Has the Independent Technical Review been performed and documented by signature release?	X		
6. Was a replicate scan performed by an independent operator on at least one drum per day or once per batch, whichever is less frequent?	X		
7. Confirm that an independent observation (not the replicate) has been performed by a qualified operator other than the individual that collected the data on one drum per day or once per batch whichever is less frequent.	X		

063

AMWTP
Advanced Mixed Waste Treatment Project

Real-Time Radiography

Technical Supervisor Checklist Rev 0 JDM 2-4-04

Criteria	Yes	No	Comment
8. Is the QA documentation for the Batch Data Reports complete and includes data reports and QC results?	X		
9. Were there any nonconforming conditions identified which affect data quality? If so indicate all NCR numbers in the comment section		X	
10. Are all NCRs closed?	N/A		

Comments: Batch RTR03-00066. Promote to Level 1 QA. DJM. 2-04-04.

J Maynard 2-4-04

064

AMWTP
Advanced Mixed Waste Treatment Project

Real-Time Radiography

Quality Assurance Checklist

Testing Batch No.: RTR03-00066	**RTR System ID: Z-213-106**
QA Print Name: Karen L. Haskett	**Date: February 5, 2004**
QA Signature: Karen L Haskett	**Date:** 2/5/04

Criteria	Yes	No	Comment
1. Has the Independent Technical Reviewer and Technical Supervisor reviews been performed and documented by signature release?	X		
2. Was the imaging quality indicator check valid and was it documented for every shift that data was generated?	X		
3. Was a replicate scan performed and documented on one waste container per day or once per testing batch whichever is less frequent, which is not the replicate?	X		
4. Confirm that an independent observation has been performed by a qualified RTR operator other than the individual that performed the first examination on one drum (not the replicate) per day or once per batch whichever is less frequent.	X		
5. Did the independent observation or replicate comparison identify anything that would change the original disposition of the drum?		X	
6. Confirm all rework identified through independent observation or replicate scan is complete?	X		
7. Was the presence or absence of prohibited items properly identified?	X		
8. Are the waste material parameters documented correctly?	X		

AMWTP
Advanced Mixed Waste Treatment Project

Real-Time Radiography

Quality Assurance Checklist

Criteria	Yes	No	Comment
9. Was the data reviewed for changes and adequate justifications made?	X		
10. Were there any nonconforming conditions identified which affect data quality? If so indicate all NCR numbers in the comment section.		X	
11. Are all NCRs closed?	**		**N/A
12 Was the QA documentation complete, reported properly with correct units and significant figures?	X		
13. Were the RTR QAOs satisfactorily met?	X		

Comments: This batch (RTR03-00066) was reviewed in accordance with MP-TRUW-8.8 Rev 7.

Karen L Haskett 2/5/04

990

AMWTP Advanced Mixed Waste Treatment Project	Site Quality Assurance Officer – RTR Checklist	AMWTP Form 1385, Rev. 3 Effective Date: 10/03/03 MP-TRUW-8.9 Page 1 of 4

SQAO (Print Name) Tim McKenna Batch Data Report # : RTR03-00066

SQAO (Signature/Date): Tim McKenna 02/06/04

Question	Response			Requirement	Comment
	YES	NO	N/A		
(1) Are there 20 or fewer waste containers in the batch?	X			WAP B3-10	
(2) Does the batch data report contain (a) batch number, (b) date of batch report, (c) waste container numbers, (d) date of examination, and (e) RTR data for each drum in the batch?	X			WAP Table B3-11	
(3) Does the batch report identify the implementing procedure number and revision number used for this testing method?	X			WAP Table B3-11	
(4) Do (Does) the individual drum reports contain the (a) IDC, (b) Waste Matrix Code, (c) audio/video recording reference, (d) gross container weight, (e) waste material parameter weights, (f) signature and date of examination?	X			WAP Table B3-11	
(5) Is there verification that the physical form matches the waste stream description and waste matrix code?	X			WAP Table B3-11	

490

SQAO (Print Name) Tim McKenna Batch Data Report # : RTR03-00066

SQAO (Signature/Date): [signature] 02/06/04

Question	Response			Requirement	Comment
	YES	NO	N/A		
(6) Have the IDC, Waste Matrix Code (WMC), and/or waste stream for all drums in the batch remained the same as originally assigned? If not, note the drum number in the comment field and notify SPM-Acceptable Knowledge (AK) if NCR does not exist on the WMC and IDC change.	X			WAP B-3C and B4-3d (1)	
(7) Is the description of container contents detailed enough to provide verification of estimated weights for the waste material parameters identified?	X			WAP B1-3a, B3-1 and B3-11a	
(8) Has a clear description of liners and layers of containment been given (if possible) for all drums in the batch?	X			WAP Table B3-11	
(9) Can liner venting be verified for all drums having vent dates?	X			WAP Table B1-5 – B1-10	
(10) For each drum in the batch, was the presence or absence of prohibited items properly identified? If free liquid exists in the drum, is an estimate of quantity given?	X			WAP B-1c	No containers in this batch have liquids that exceed 4.4 pints.
(11) Where QC checks properly performed and do they meet the Quality Assurance Objectives (QAOs)?	X			WAP B3-10b(1)	

068

SQAO (Print Name) Tim McKenna Batch Data Report # : RTR03-00066

SQAO (Signature/Date): Tim McKenna 02/06/04

Question	Response			Requirement	Comment
	YES	NO	N/A		
(12) Was the imaging quality indicator check valid, and was it performed and documented for every shift that data was generated?	X			WAP B3-4	
(13) Has a replicate drum scan occurred at a rate of once per day or one per batch, whichever is less frequent?	X			WAP B1-3b	A replicate comparison scan was performed on ID10001233.
(14) Has an independent observation of one scan (not the replicate) been performed by a qualified operator other than the individual who performed the first scan, at a rate of once per day or one per batch, whichever is less frequent?	X			WAP B1-3b, B3-10b(1)	
(15) Is the RTR batch complete and acceptable based on evidence of a review of at least one drum RTR audio/video recording per batch? Record the container number, date of observation and any issues or concerns in the comment section.	X			WAP B3-10b(1)	Operator D. Lee has performed an independent observation on ID10001321 dated ~~1/05/04~~ 11/05/03 EPS 6/20/13
(16) Are the Independent Technical Reviewer, Technical Supervisor and Quality Assurance Officer checklists complete and accurate?	X			WAP B3-13	

699

SQAO (Print Name) Tim McKenna Batch Data Report # : RTR03-00066

SQAO (Signature/Date): Tim McKenna 02/06/04

Question	Response			Requirement	Comment
	YES	NO	N/A		
(17) Are there any Nonconformance Reports associated with this Batch? Identify NCR(s) (open or closed), and whether the NCR is for a specific container, or the batch.		X		WAP B3-12a	
(18) Is the batch complete (required batch forms are listed in MP-TRUW-8.8 and 8.9); data reported properly with correct units and significant figures.	X			WAP Table B3-11	

070

AMWTP Advanced Mixed Waste Treatment Project	**Acceptable Knowledge RTR Checklist**	AMWTP Form 1394, Rev. 2 Effective Date: 05/02/03 MP-TRUW-8.9 Page 1 of 2

SPM Signature/Date: _____ 2/7/04

Batch Data Report # : RTR03-00066

Question	Response			Requirement	Comment
	YES	NO	N/A		
(1) When identified, were PCBs, mercury, lead, or other hazardous contaminants consistent with the waste stream AK Summary Report?			X	WAP B4-3d	None identified.
(2) Are any ignitable, corrosive, or reactive wastes identified in this waste?		X		WAP B4-3d	
(3) Are the packaging configurations identified on the RTR consistent with the waste stream AK Summary Report?		X		WAP B4-3b	AKR-04-59: 10001230 (3 layers)
(4) Do the drums in this batch contain typical waste items consistent with waste stream AK Summary Report?	X			WAP B4-3b	
(5) Are the Waste Matrix Codes and physical form descriptions consistent with AK?	X			WAP B4-3d	
(6) Were any nonconforming items or conditions identified?	~~X~~	X		WAP B3-12a	

SPM 2-4-04

071

	Response				
(7) Have all AK discrepancies been resolved and have all AK Resolution checklists been approved? Reference all waste stream AK Summary Reports used in review of this data package.	X			WAP B4-3b	Reference: INEL-96/0280 rev 3, BNFL-5232-RPT-TRUW-12 rev 1.

SPM Signature/Date: _____ 2/7/04

Batch Data Report # : RTR03-00066

072

AMWTP Advanced Mixed Waste Treatment Project	Site Project Manager RTR Data Validation Checklist	AMWTP Form 1397, Rev. 2 Effective Date: 05/02/03 MP-TRUW-8.9 Page 1 of 1

SPM Signature/Date: _____ 2/7/04

Batch Data Report # : RTR03-00066

Question	Response			Requirement	Comment
	YES	NO	N/A		
(1) Has the batch received a Data Generation Level Independent Technical Review, Technical Supervisor and QA Officer review?	X			WAP B3-10b(2)	
(2) Are the batch data review checklists complete?	X			WAP B3-10b(2)	
(3) Have all applicable Quality Assurance Objectives been met including precision, accuracy, completeness, and comparability by using the appropriate acceptance criteria for each as specified in WAP section B3-4?	X			WAP B3-4 WAP B3-10b(2)	
(4) The data for all containers within this batch are complete, properly documented, technically reasonable, representative, and meet the review, validation, and verification requirements of MP-TRUW-8.2, and the relevant batch specific Checklists/Forms from MP-TRUW-8.8 and MP-TRUW-8.9. Are proper units (e.g. liters or pounds) and significant figures used?	X			WAP B3-10b(2)	As evidenced by BDR and associated checklists. Temperature chart on BDR pg 048 begins on 11/4/2003. Accept.

There was a typographical error in the responce on question 15 of the SQAO Checklist. Correction of the date has been made regarding the independent observation. This date error does not impact the data quality of the batch or the validation performed. Cin Bloomberg, SPM, 6/20/13

073

AMWTP
Advanced Mixed Waste Treatment Project

Batch Data Report Supplemental Comment Form

AMWTP Form-1491
Rev. 0
Implementing Documents: MP-TRUW-8.8 & 8.9
Effective Date: 9/25/03
~~Page 1 of 2~~
EMM 2-7-04

074

Batch Number RTR03-00066

Page 1 of 7

Item	Date	Name	Comments
1	11-26-03	Eddy R Walters (ITR)	Drum ID's 10001233, 10001238, And 10001368 Operator Gary Peterson calls out Vermiculite for absorbent this appears to be incorrect. Please review audio / video recording and make corrections accordingly.
2	11-26-03	Eddy R Walters (ITR)	Drum ID 10001230 Operator Denise Lee states on the audio / video recording 3 layers of containment and lists 2 in WTS. Please review audio / video recording and make correction accordingly.
3	11-26-03	Eddy R Walters (ITR)	Drum ID's 10001321, and 10001322 Operator Shawn Jordan calls out Vermiculite for absorbent this appears to be incorrect. Please review audio / video recording and make corrections accordingly.
4	11-26-03	Eddy R Walters (ITR)	Drum ID 10001324 Operator Shawn Jordan states on the audio / video recording type 2 90ml liner and lists type 3 90ml liner in WTS. Please review audio / video recording and make correction accordingly
5	11-26-03	Eddy R Walters (ITR)	Drum ID 10001323 Operator Shawn Jordan fails to state on the audio / video recording a fill factor but enters the correct fill factor in WTS. No response required. Demoted to Operations for re-work.
6	11-28-03	Eddy R Walters (ITR)	Operator Gary Peterson reviewed Drum ID's 10001233, 10001238, And 10001368 and has completed his re-work for these drums.
7	11-28-03	Eddy R Walters (ITR)	Operator Denise Lee reviewed Drum ID 10001230 and has completed her re-work for this drum.
8	11-29-03	Eddy R Walters (ITR)	Operator Shawn Jordan reviewed Drum ID's 10001321, 10001322, and 10001324 and has completed his re-work for these drums.

Note: Data Validation Reviewers should continue with indicating the Item number in the first column in numerical sequence. This page's Item number column was intentionally left blank in the event a batch may require additional comment pages.

Eddy R Walters 12-17-03

AMWTP
Advanced Mixed Waste Treatment Project

Batch Data Report Supplemental Comment Form

AMWTP Form-1491
Rev. 0
Implementing Documents: MP-TRUW-8.8 & 8.9
Effective Date: 9/25/03
~~Page 2 of 2~~
Cpm 2-7-04

075

Batch Number RTR03-00066

Page 2 of 7

Item	Date	Name	Comments
9	12-02-03	Eddy R Walters (ITR)	Drum ID 10001368 at 3:06 of the audio/video recording Operator Gary Peterson calls out Vermiculite on top of the bagging for absorbent this appears to be oil dry. Please review audio / video recording and make corrections accordingly.
10	12-15-03	Eddy R Walters (ITR)	Operator Gary Peterson reviewed Drum ID 10001368 and has completed his re-work for this drum.
11	12-17-03	Eddy R Walters (ITR)	Reviewed BDR after completion of re-work Per. MP-TRUW-8.8 Rev.7 Promoted to TS level.

Note: Data Validation Reviewers should continue with indicating the Item number in the first column in numerical sequence. This page's Item number column was intentionally left blank in the event a batch may require additional comment pages.

Eddy R Walters 12-17-03

AMWTP
Advanced Mixed Waste Treatment Project

Batch Data Report Supplemental Comment Form

AMWTP Form-1491
Rev. 0
Implementing Documents: MP-TRUW-8.8 & 8.9
Effective Date: 9/25/03
~~Page 1 of 1~~
2-7-04

Batch Number RTR03-00066

Item	Date	Name	Comments
12.	2/1/04	Pam Fetzer (TS)	ITR please correct comment for ITR checklist (all Revisions) #17 Original/Replicate comparison to reflect pre-rework status.
13.	2/1/04	Pam Fetzer (TS)	10001238: Operator changes drum comment of 11-6-03 to delete an O-ring bag. Please clarify if there is an O-ring bag in the waste. (G. Petersen)
14.	2/1/04	Pam Fetzer (TS)	TS review complete. Demote to Operations.

970

2-1-04

AMWTP
Advanced Mixed Waste Treatment Project

Batch Data Report Supplemental Comment Form

AMWTP Form-1491
Rev. 0
Implementing Documents: MP-TRUW-8.8 & 8.9
Effective Date: 9/25/03
~~Page 1 of 2~~
2-7-04

Batch Number RTR03-00066

Page 4 of 7

Item	Date	Name	Comments
15	2-3-04	Eddy R Walters (ITR)	Corrected checklist # 17 to reflect Pre-work status.
16	2-3-04	Eddy R Walters (ITR)	Operator added o-ring bag to result comment area of the BDR. The o-ring bag was originally included in the comment area but was inadvertently deleted during re-work. This o-ring bag is reflected in the waste Material Items as Packaging Materials.
17	2-3-04	Eddy R Walters (ITR)	Reviewed BDR after completion of re-wok Per. MP-TRUW-8.8 Rev.7 Promoted to TS level.

Note: Data Validation Reviewers should continue with indicating the Item number in the first column in numerical sequence. This page's Item number column was intentionally left blank in the event a batch may require additional comment pages.

Eddy R Walters 2-3-04

027

AMWTP
Advanced Mixed Waste Treatment Project

Batch Data Report Supplemental Comment Form

AMWTP Form-1491
Rev. 0
Implementing Documents: MP-TRUW-8.8 & 8.9
Effective Date: 9/25/03
~~Page 2 of 2~~

2-4-04

Batch Number RTR03-00066

Item	Date	Name	Comments
18	2-04-04	D. Marquardt (TS)	Temperature spikes on November 5th and 6th are of a short duration and does not affect the warming requirements.
19	2-04-04	D. Marquardt (TS)	Promote to Level 1 QA.

Note: Data Validation Reviewers should continue with indicating the Item number in the first column in numerical sequence. This page's Item number column was intentionally left blank in the event a batch may require additional comment pages.

2-4-04

AMWTP
Advanced Mixed Waste Treatment Project

Batch Data Report Supplemental Comment Form

AMWTP Form-1491
Rev. 0
Implementing Documents: MP-TRUW-8.8 & 8.9
Effective Date: 9/25/03
~~Page 2 of 2~~
Zaml 2-7-04

Batch Number RTR03-00066

Page 6 of 7

Item	Date	Name	Comments
20.	2/5/04	Karen L. Haskett (QA)	Review complete. Promoted batch to SQAO.

Note: Data Validation Reviewers should continue with indicating the Item number in the first column in numerical sequence. This page's Item number column was intentionally left blank in the event a batch may require additional comment pages.

Karen L Haskett 2/5/04

679

AMWTP
Advanced Mixed Waste Treatment Project

Batch Data Report Supplemental Comment Form

AMWTP Form-1491
Rev. 0
Implementing Documents: MP-TRUW-8.8 & 8.9
Effective Date: 9/25/03
~~Page 1 of 2~~
TM 2/6/04

Batch Number RTR03-00066

Page 7 **of** 7

Item	Date	Name	Comments
21.	2/06/04	Tim McKenna SQAO	Promoted batch to SPM. TMcK 02/~~04~~06/04 TM 2/6/04

T. McKenna 2/6/04

Note:

080

AMWTP
Advanced Mixed Waste Treatment Project

AMWTP

Batch Report Coversheet

Date: 22-Sep-2014

Time: 06:45

Batch Type VE Boxline
Batch Report No. VEB14-00098
Batch Id VEB14-00098
Open Date 10-APR-14 00:43:07
Close Date 10-APR-14 15:27:18
Batch Status AP
Test Facility Idaho AMWTP
Equipment Id VE BiD RPCK VE Box Repackaging Into Drums

Container Id	IDC	Analysis Id	Date Examined	QC Type	Analysis Status	Operator
10516352	BN-508	0000316485	10-APR-14 00:43:08	Original	P	SARA FELLOWS
10516360	BN-508	0000316486	10-APR-14 01:00:40	Original	P	SARA FELLOWS
10516371	BN-508	0000316488	10-APR-14 01:30:11	Original	P	SARA FELLOWS
10516374	BN-508	0000316491	10-APR-14 03:18:50	Original	P	SARA FELLOWS
10516375	BN-508	0000316492	10-APR-14 03:31:05	Original	P	SARA FELLOWS
10516368	BN-508	0000316493	10-APR-14 04:02:09	Original	P	SARA FELLOWS
10516364	BN-508	0000316496	10-APR-14 05:20:25	Original	P	SARA FELLOWS
10516362	BN-508	0000316497	10-APR-14 05:50:59	Original	P	SARA FELLOWS
10516369	BN-508	0000316498	10-APR-14 07:10:33	Original	P	TRACY PARK
10516353	BN-508	0000316499	10-APR-14 07:12:14	Original	P	TRACY PARK
10516355	BN-508	0000316516	10-APR-14 13:20:04	Original	P	ROSS J GUNNING
10516351	BN-508	0000316517	10-APR-14 12:35:19	Original	P	ANTHONY CAIN
10516365	BN-508	0000316519	10-APR-14 13:22:16	Original	P	ROSS J GUNNING
10516357	BN-508	0000316523	10-APR-14 14:12:17	Original	P	VIRGIL B WATERS
10516386	BN-508	0000316524	10-APR-14 14:46:39	Original	P	VIRGIL B WATERS
10516388	BN-508	0000316525	10-APR-14 14:53:01	Original	P	VIRGIL B WATERS
10516356	BN-508	0000316526	10-APR-14 14:59:24	Original	P	VIRGIL B WATERS
10516391	BN-508	0000316527	10-APR-14 15:07:39	Original	P	VIRGIL B WATERS
10516376	BN-508	0000316528	10-APR-14 15:19:11	Original	P	VIRGIL B WATERS
10516354	BN-508	0000316529	10-APR-14 15:26:19	Original	P	ANTHONY CAIN

**********Batch Comments**********

Written By	Date	Comment
CSIMMONS	13-APR-14 07:46:08	This batch was validated to MP-TRUW-8.8.
CSIMMONS	13-APR-14 07:46:09	Promoted batch to SPM level.
NSTYHL	14-APR-14 09:28:05	SPM review complete.
NSTYHL	14-APR-14 09:28:05	Approve batch.

**********Batch E-Signature History**********

Approval ID	User ID	Signature Date	Comment
2731638	CSIMMONS	13-APR-2014 07:46:09	Promoted batch to SPM level.
2732147	NSTYHL	14-APR-2014 09:28:06	Approve batch.

***** End of Batch Report Coversheet Report *****

AMWTP
Advanced Mixed Waste Treatment Project

AMWTP

VE Boxline and Repackaging Report

Date: 22-Sep-2014

Time: 06:46

Batch Id VEB14-00098 **Container Id** 10516352 **Analysis Id** 0000316485

VE Date 10-APR-14 00:43:08 **Analysis Status** Pass

Gen-IDC Code BN-508 AMWTP Newly Generated Debris **VE Weight** 88.20 lbs

Closure Date 10-APR-14 00:43:08 **Procedure Id** INST-FOI-17 **Net Weight** 62.20 lbs

Container Type 55 **Revision** 27

Operator 1 SARA FELLOWS **Waste Matrix** S5490 **Summary Category Group** S5000

Operator 2 SHANE HIGH **Equipment ID** VE BiD RPCK

General

Rigid Liner Present? No **Liner Type** NO LINER **Closure Method** No Bags

Liner Punctured? Yes **Layers Of Confinement** 0 **Fill Factor** 75 % **Liner Lid Present** No

Liquids

Liquids Present? No **Comment**

Liquid Between Liner and Drum 0 pints **Other Liquids** 0 pints

Containerized Liquid pints **Total Liquid Amount** 0 pints

Internal Container with Liquid 0 pints

Internal Container with Liquid No

Prohibited Liquids Present No

Containerized Liquid

Contents

Sharp Objects? No **Are Sharp Objects Protected?** Yes

	Value	*Comment*
Prohibited Compressed Gas Present?	No	
Explosives Present?	No	
Pyrophorics Present?	No	
Mercury Present?	No	
PCBs Present?	No	
PCB Mass (lbs)	0	
Wet Cell Batteries Present?	No	
Corrosives,Ignitables or Reactives Present?	No	
Beryllium Contaminates Present?	No	
Hazardous-Only Waste Present?	No	
Is Waste Incompatible with backfill, packaging materials, or shipping container materials?	No	
Sealed Containers Over 4L?	No	

IDC Verification

Is IDC correct? Yes **Recommended IDC** -

IDC Change Reason

Batch Id VEB14-00098 **Container Id** 10516352 **Analysis Id** 0000316485

Visual Exam Comment The remaining waste by weight percent is plastic (Waste Materials) consisting of bags, sheeting and tape.

Source Container

Is there a source container? Yes

Source Container ID	Location	IDC
10508937	destroyed @ 676- BXI/9	RF-760

IDC CODES

Current Container IDC Code: BN-508 **Recommended IDC Code:** -

Waste Material Items

Packaging Materials

Material Item	Quantity	Unit	Unit Wt	Item Wt(lbs)

Waste Items by Weight

Material Item	Quantity	Unit	Unit Wt	Item Wt(lbs)

Waste Items by Volume

Material Item	Quantity	Unit	Unit Wt	Item Wt(lbs)
Paper	5.000	PINTS	0.969	4.850
Rubber	2.000	PINTS	1.554	3.110
Wood	1.000	PINTS	0.702	0.700

Waste Parameters

Waste Parameter	Remaining Weight %	Actual Weight Lbs
Iron-based Metals/Alloys	0.000	0.000
Aluminum-based Metals/Alloys	0.000	0.000
Other metals	0.000	0.000
Other Inorganic Materials	0.000	0.000
Cellulosics	0.000	5.550
Rubber	0.000	3.110
Plastic (Waste Materials)	100.000	53.540
Inorganic matrix	0.000	0.000
Organic matrix	0.000	0.000
Soils/gravel	0.000	0.000
Steel (packaging materials)	0.000	26.000
Plastic (packaging materials)	0.000	0.000
Cellulosics Packaging	0.000	0.000
MLLW Waste	0.000	0.000

Esignature History

Esig Approval Id	User Id	E-signature Date	Comment
2729689	SFELLOWS	10-APR-14 00:43:09	
2729690	SHIGH	10-APR-14 00:43:12	

Batch Id VEB14-00098 **Container Id** 10516360 **Analysis Id** 0000316486

VE Date 10-APR-14 01:00:40 **Analysis Status** Pass

Gen-IDC Code BN-508 AMWTP Newly Generated Debris **VE Weight** 83.79 lbs

Closure Date 10-APR-14 01:00:40 **Procedure Id** INST-FOI-17 **Net Weight** 57.79 lbs

Container Type 55 **Revision** 27

Operator 1 SARA FELLOWS **Waste Matrix** S5490 **Summary Category Group** S5000

Operator 2 SHANE HIGH **Equipment ID** VE BiD RPCK

General

Rigid Liner Present? No **Liner Type** NO LINER **Closure Method** No Bags

Liner Punctured? Yes **Layers Of Confinement** 0 **Fill Factor** 80 % **Liner Lid Present** No

Liquids

Liquids Present? No **Comment**

Liquid Between Liner and Drum 0 pints **Other Liquids** 0 pints

Containerized Liquid pints **Total Liquid Amount** 0 pints

Internal Container with Liquid 0 pints

Internal Container with Liquid No

Prohibited Liquids Present No

Containerized Liquid

Contents

Sharp Objects? No **Are Sharp Objects Protected?** Yes

	Value	*Comment*
Prohibited Compressed Gas Present?	No	
Explosives Present?	No	
Pyrophorics Present?	No	
Mercury Present?	No	
PCBs Present?	No	
PCB Mass (lbs)	0	
Wet Cell Batteries Present?	No	
Corrosives,Ignitables or Reactives Present?	No	
Beryllium Contaminates Present?	No	
Hazardous-Only Waste Present?	No	
Is Waste Incompatible with backfill, packaging materials, or shipping container materials?	No	
Sealed Containers Over 4L?	No	

IDC Verification

Is IDC correct? Yes **Recommended IDC** -

IDC Change Reason

Batch Id VEB14-00098 **Container Id** 10516360 **Analysis Id** 0000316486

Visual Exam Comment The remaining waste by weight percent is Cellulosics consisting of wood debris.

Source Container

Is there a source container? Yes

Source Container ID	Location	IDC
10508937	destroyed @ 676- BXI/9	RF-760

IDC CODES

Current Container IDC Code: BN-508 **Recommended IDC Code:** -

Waste Material Items

Packaging Materials

Material Item	Quantity	Unit	Unit Wt	Item Wt(lbs)

Waste Items by Weight

Material Item	Quantity	Unit	Unit Wt	Item Wt(lbs)

Waste Items by Volume

Material Item	Quantity	Unit	Unit Wt	Item Wt(lbs)
Plastic	1.000	PINTS	0.937	0.940

Waste Parameters

Waste Parameter	Remaining Weight %	Actual Weight Lbs
Iron-based Metals/Alloys	0.000	0.000
Aluminum-based Metals/Alloys	0.000	0.000
Other metals	0.000	0.000
Other Inorganic Materials	0.000	0.000
Cellulosics	100.000	56.850
Rubber	0.000	0.000
Plastic (Waste Materials)	0.000	0.940
Inorganic matrix	0.000	0.000
Organic matrix	0.000	0.000
Soils/gravel	0.000	0.000
Steel (packaging materials)	0.000	26.000
Plastic (packaging materials)	0.000	0.000
Cellulosics Packaging	0.000	0.000
MLLW Waste	0.000	0.000

Esignature History

Esig Approval Id	User Id	E-signature Date	Comment
2729691	SFELLOWS	10-APR-14 01:00:41	
2729692	SHIGH	10-APR-14 01:00:43	

Batch Id VEB14-00098 **Container Id** 10516371 **Analysis Id** 0000316488

VE Date 10-APR-14 01:30:11 **Analysis Status** Pass

Gen-IDC Code BN-508 AMWTP Newly Generated Debris **VE Weight** 101.43 lbs

Closure Date 10-APR-14 01:30:11 **Procedure Id** INST-FOI-17 **Net Weight** 75.43 lbs

Container Type 55 **Revision** 27

Operator 1 SARA FELLOWS **Waste Matrix** S5490 **Summary Category Group** S5000

Operator 2 SHANE HIGH **Equipment ID** VE BiD RPCK

General

Rigid Liner Present? No **Liner Type** NO LINER **Closure Method** No Bags

Liner Punctured? Yes **Layers Of Confinement** 0 **Fill Factor** 75 % **Liner Lid Present** No

Liquids

Liquids Present? No **Comment**

Liquid Between Liner and Drum 0 pints **Other Liquids** 0 pints

Containerized Liquid pints **Total Liquid Amount** 0 pints

Internal Container with Liquid 0 pints

Internal Container with Liquid No

Prohibited Liquids Present No

Containerized Liquid

Contents

Sharp Objects? No **Are Sharp Objects Protected?** Yes

	Value	*Comment*
Prohibited Compressed Gas Present?	No	
Explosives Present?	No	
Pyrophorics Present?	No	
Mercury Present?	No	
PCBs Present?	No	
PCB Mass (lbs)	0	
Wet Cell Batteries Present?	No	
Corrosives,Ignitables or Reactives Present?	No	
Beryllium Contaminates Present?	No	
Hazardous-Only Waste Present?	No	
Is Waste Incompatible with backfill, packaging materials, or shipping container materials?	No	
Sealed Containers Over 4L?	No	

IDC Verification

Is IDC correct? Yes **Recommended IDC** -

IDC Change Reason

Batch Id VEB14-00098 **Container Id** 10516371 **Analysis Id** 0000316488

Visual Exam Comment The remaining waste by weight percent is Cellulosics consisting of wood debris.

---Source Container---

Is there a source container? Yes

Source Container ID	Location	IDC
10508937	destroyed @ 676- BXI/9	RF-760

---IDC CODES---

Current Container IDC Code: BN-508 **Recommended IDC Code:** -

---Waste Material Items---

---Packaging Materials---

Material Item	Quantity	Unit	Unit Wt	Item Wt(lbs)

---Waste Items by Weight---

Material Item	Quantity	Unit	Unit Wt	Item Wt(lbs)

---Waste Items by Volume---

Material Item	Quantity	Unit	Unit Wt	Item Wt(lbs)

---Waste Parameters---

Waste Parameter	Remaining Weight %	Actual Weight Lbs
Iron-based Metals/Alloys	0.000	0.000
Aluminum-based Metals/Alloys	0.000	0.000
Other metals	0.000	0.000
Other Inorganic Materials	0.000	0.000
Cellulosics	100.000	75.430
Rubber	0.000	0.000
Plastic (Waste Materials)	0.000	0.000
Inorganic matrix	0.000	0.000
Organic matrix	0.000	0.000
Soils/gravel	0.000	0.000
Steel (packaging materials)	0.000	26.000
Plastic (packaging materials)	0.000	0.000
Cellulosics Packaging	0.000	0.000
MLLW Waste	0.000	0.000

---Esignature History---

Esig Approval Id	User Id	E-signature Date	Comment
2729694	SFELLOWS	10-APR-14 01:30:12	
2729695	SHIGH	10-APR-14 01:30:14	

Batch Id VEB14-00098 **Container Id** 10516374 **Analysis Id** 0000316491

VE Date 10-APR-14 03:18:50 **Analysis Status** Pass

Gen-IDC Code BN-508 AMWTP Newly Generated Debris **VE Weight** 154.35 lbs

Closure Date 10-APR-14 03:18:50 **Procedure Id** INST-FOI-17 **Net Weight** 128.35 lbs

Container Type 55 **Revision** 27

Operator 1 SARA FELLOWS **Waste Matrix** S5490 **Summary Category Group** S5000

Operator 2 SHANE HIGH **Equipment ID** VE BiD RPCK

General

Rigid Liner Present? No **Liner Type** NO LINER **Closure Method** No Bags

Liner Punctured? Yes **Layers Of Confinement** 0 **Fill Factor** 65 % **Liner Lid Present** No

Liquids

Liquids Present? No **Comment**

Liquid Between Liner and Drum 0 pints **Other Liquids** 0 pints

Containerized Liquid pints **Total Liquid Amount** 0 pints

Internal Container with Liquid 0 pints

Internal Container with Liquid No

Prohibited Liquids Present No

Containerized Liquid

Contents

Sharp Objects? Yes **Are Sharp Objects Protected?** No

	Value	*Comment*
Prohibited Compressed Gas Present?	No	
Explosives Present?	No	
Pyrophorics Present?	No	
Mercury Present?	No	
PCBs Present?	No	
PCB Mass (lbs)	0	
Wet Cell Batteries Present?	No	
Corrosives,Ignitables or Reactives Present?	No	
Beryllium Contaminates Present?	No	
Hazardous-Only Waste Present?	No	
Is Waste Incompatible with backfill, packaging materials, or shipping container materials?	No	
Sealed Containers Over 4L?	No	

IDC Verification

Is IDC correct? Yes **Recommended IDC** -

IDC Change Reason

Batch Id VEB14-00098 **Container Id** 10516374 **Analysis Id** 0000316491

Visual Exam Comment The remaining waste by weight percent is Iron-based Metals/Alloys consisting of misc. scrap metal.

Source Container

Is there a source container? Yes

Source Container ID	Location	IDC
10508937	destroyed @ 676- BXI/9	RF-760

IDC CODES

Current Container IDC Code: BN-508 **Recommended IDC Code:** -

Waste Material Items

Packaging Materials

Material Item	Quantity	Unit	Unit Wt	Item Wt(lbs)

Waste Items by Weight

Material Item	Quantity	Unit	Unit Wt	Item Wt(lbs)

Waste Items by Volume

Material Item	Quantity	Unit	Unit Wt	Item Wt(lbs)

Waste Parameters

Waste Parameter	Remaining Weight %	Actual Weight Lbs
Iron-based Metals/Alloys	100.000	128.350
Aluminum-based Metals/Alloys	0.000	0.000
Other metals	0.000	0.000
Other Inorganic Materials	0.000	0.000
Cellulosics	0.000	0.000
Rubber	0.000	0.000
Plastic (Waste Materials)	0.000	0.000
Inorganic matrix	0.000	0.000
Organic matrix	0.000	0.000
Soils/gravel	0.000	0.000
Steel (packaging materials)	0.000	26.000
Plastic (packaging materials)	0.000	0.000
Cellulosics Packaging	0.000	0.000
MLLW Waste	0.000	0.000

Esignature History

Esig Approval Id	User Id	E-signature Date	Comment
2729708	SFELLOWS	10-APR-14 03:18:50	
2729709	SHIGH	10-APR-14 03:18:52	

Batch Id VEB14-00098 **Container Id** 10516375 **Analysis Id** 0000316492

VE Date 10-APR-14 03:31:05 **Analysis Status** Pass

Gen-IDC Code BN-508 AMWTP Newly Generated Debris **VE Weight** 141.12 lbs

Closure Date 10-APR-14 03:31:05 **Procedure Id** INST-FOI-17 **Net Weight** 115.12 lbs

Container Type 55 **Revision** 27

Operator 1 SARA FELLOWS **Waste Matrix** S5490 **Summary Category Group** S5000

Operator 2 SHANE HIGH **Equipment ID** VE BiD RPCK

General

Rigid Liner Present? No **Liner Type** NO LINER **Closure Method** No Bags

Liner Punctured? Yes **Layers Of Confinement** 0 **Fill Factor** 70 % **Liner Lid Present** No

Liquids

Liquids Present? No **Comment**

Liquid Between Liner and Drum 0 pints **Other Liquids** 0 pints

Containerized Liquid pints **Total Liquid Amount** 0 pints

Internal Container with Liquid 0 pints

Internal Container with Liquid No

Prohibited Liquids Present No

Containerized Liquid

Contents

Sharp Objects? Yes **Are Sharp Objects Protected?** No

	Value	*Comment*
Prohibited Compressed Gas Present?	No	
Explosives Present?	No	
Pyrophorics Present?	No	
Mercury Present?	No	
PCBs Present?	No	
PCB Mass (lbs)	0	
Wet Cell Batteries Present?	No	
Corrosives,Ignitables or Reactives Present?	No	
Beryllium Contaminates Present?	No	
Hazardous-Only Waste Present?	No	
Is Waste Incompatible with backfill, packaging materials, or shipping container materials?	No	
Sealed Containers Over 4L?	No	

IDC Verification

Is IDC correct? Yes **Recommended IDC** -

IDC Change Reason

Batch Id VEB14-00098 **Container Id** 10516375 **Analysis Id** 0000316492

Visual Exam Comment The remaining waste by weight percent is Iron-based Metals/Alloys consisting of misc. scrap metal.

Source Container

Is there a source container? Yes

Source Container ID	Location	IDC
10508937	destroyed @ 676- BXI/9	RF-760

IDC CODES

Current Container IDC Code: BN-508 **Recommended IDC Code:** -

Waste Material Items

Packaging Materials

Material Item	Quantity	Unit	Unit Wt	Item Wt(lbs)

Waste Items by Weight

Material Item	Quantity	Unit	Unit Wt	Item Wt(lbs)

Waste Items by Volume

Material Item	Quantity	Unit	Unit Wt	Item Wt(lbs)

Waste Parameters

Waste Parameter	Remaining Weight %	Actual Weight Lbs
Iron-based Metals/Alloys	100.000	115.120
Aluminum-based Metals/Alloys	0.000	0.000
Other metals	0.000	0.000
Other Inorganic Materials	0.000	0.000
Cellulosics	0.000	0.000
Rubber	0.000	0.000
Plastic (Waste Materials)	0.000	0.000
Inorganic matrix	0.000	0.000
Organic matrix	0.000	0.000
Soils/gravel	0.000	0.000
Steel (packaging materials)	0.000	26.000
Plastic (packaging materials)	0.000	0.000
Cellulosics Packaging	0.000	0.000
MLLW Waste	0.000	0.000

Esignature History

Esig Approval Id	User Id	E-signature Date	Comment
2729712	SFELLOWS	10-APR-14 03:31:06	
2729713	SHIGH	10-APR-14 03:31:10	

Batch Id VEB14-00098 **Container Id** 10516368 **Analysis Id** 0000316493

VE Date 10-APR-14 04:02:09 **Analysis Status** Pass

Gen-IDC Code BN-508 AMWTP Newly Generated Debris **VE Weight** 180.81 lbs

Closure Date 10-APR-14 04:02:09 **Procedure Id** INST-FOI-17 **Net Weight** 154.81 lbs

Container Type 55 **Revision** 27

Operator 1 SARA FELLOWS **Waste Matrix** S5490 **Summary Category Group** S5000

Operator 2 SHANE HIGH **Equipment ID** VE BiD RPCK

General

Rigid Liner Present? No **Liner Type** NO LINER **Closure Method** No Bags

Liner Punctured? Yes **Layers Of Confinement** 0 **Fill Factor** 75 % **Liner Lid Present** No

Liquids

Liquids Present? No **Comment**

Liquid Between Liner and Drum 0 pints **Other Liquids** 0 pints

Containerized Liquid pints **Total Liquid Amount** 0 pints

Internal Container with Liquid 0 pints

Internal Container with Liquid No

Prohibited Liquids Present No

Containerized Liquid

Contents

Sharp Objects? Yes **Are Sharp Objects Protected?** No

	Value	*Comment*
Prohibited Compressed Gas Present?	No	
Explosives Present?	No	
Pyrophorics Present?	No	
Mercury Present?	No	
PCBs Present?	No	
PCB Mass (lbs)	0	
Wet Cell Batteries Present?	No	
Corrosives,Ignitables or Reactives Present?	No	
Beryllium Contaminates Present?	No	
Hazardous-Only Waste Present?	No	
Is Waste Incompatible with backfill, packaging materials, or shipping container materials?	No	
Sealed Containers Over 4L?	No	

IDC Verification

Is IDC correct? Yes **Recommended IDC** -

IDC Change Reason

Batch Id VEB14-00098 **Container Id** 10516368 **Analysis Id** 0000316493

Visual Exam Comment The remaining waste by weight percent is Iron-based Metals/Alloys consisting of misc. scrap metal.

Source Container

Is there a source container? Yes

Source Container ID	Location	IDC
10508937	destroyed @ 676- BXI/9	RF-760

IDC CODES

Current Container IDC Code: BN-508 **Recommended IDC Code:** -

Waste Material Items

Packaging Materials

Material Item	Quantity	Unit	Unit Wt	Item Wt(lbs)

Waste Items by Weight

Material Item	Quantity	Unit	Unit Wt	Item Wt(lbs)

Waste Items by Volume

Material Item	Quantity	Unit	Unit Wt	Item Wt(lbs)

Waste Parameters

Waste Parameter	Remaining Weight %	Actual Weight Lbs
Iron-based Metals/Alloys	100.000	154.810
Aluminum-based Metals/Alloys	0.000	0.000
Other metals	0.000	0.000
Other Inorganic Materials	0.000	0.000
Cellulosics	0.000	0.000
Rubber	0.000	0.000
Plastic (Waste Materials)	0.000	0.000
Inorganic matrix	0.000	0.000
Organic matrix	0.000	0.000
Soils/gravel	0.000	0.000
Steel (packaging materials)	0.000	26.000
Plastic (packaging materials)	0.000	0.000
Cellulosics Packaging	0.000	0.000
MLLW Waste	0.000	0.000

Esignature History

Esig Approval Id	User Id	E-signature Date	Comment
2729715	SFELLOWS	10-APR-14 04:02:09	
2729716	SHIGH	10-APR-14 04:02:12	

Batch Id VEB14-00098 **Container Id** 10516364 **Analysis Id** 0000316496

VE Date 10-APR-14 05:20:25 **Analysis Status** Pass

Gen-IDC Code BN-508 AMWTP Newly Generated Debris **VE Weight** 105.84 lbs

Closure Date 10-APR-14 05:20:25 **Procedure Id** INST-FOI-17 **Net Weight** 79.84 lbs

Container Type 55 **Revision** 27

Operator 1 SARA FELLOWS **Waste Matrix** S5490 **Summary Category Group** S5000

Operator 2 SHANE HIGH **Equipment ID** VE BiD RPCK

General

Rigid Liner Present? No **Liner Type** NO LINER **Closure Method** No Bags

Liner Punctured? Yes **Layers Of Confinement** 0 **Fill Factor** 80 % **Liner Lid Present** No

Liquids

Liquids Present? No **Comment**

Liquid Between Liner and Drum 0 pints **Other Liquids** 0 pints

Containerized Liquid pints **Total Liquid Amount** 0 pints

Internal Container with Liquid 0 pints

Internal Container with Liquid No

Prohibited Liquids Present No

Containerized Liquid

Contents

Sharp Objects? Yes **Are Sharp Objects Protected?** No

	Value	Comment
Prohibited Compressed Gas Present?	No	
Explosives Present?	No	
Pyrophorics Present?	No	
Mercury Present?	No	
PCBs Present?	No	
PCB Mass (lbs)	0	
Wet Cell Batteries Present?	No	
Corrosives,Ignitables or Reactives Present?	No	
Beryllium Contaminates Present?	No	
Hazardous-Only Waste Present?	No	
Is Waste Incompatible with backfill, packaging materials, or shipping container materials?	No	
Sealed Containers Over 4L?	No	

IDC Verification

Is IDC correct? Yes **Recommended IDC** -

IDC Change Reason

Batch Id VEB14-00098 **Container Id** 10516364 **Analysis Id** 0000316496

Visual Exam Comment The remaining waste by weight percent is Iron-based Metals/Alloys consisting of misc. scrap metal.

Source Container

Is there a source container? Yes

Source Container ID	Location	IDC
10291964	destroyed @ 676- BXI/16	SD-177

IDC CODES

Current Container IDC Code: BN-508 **Recommended IDC Code:** -

Waste Material Items

Packaging Materials

Material Item	Quantity	Unit	Unit Wt	Item Wt(lbs)

Waste Items by Weight

Material Item	Quantity	Unit	Unit Wt	Item Wt(lbs)

Waste Items by Volume

Material Item	Quantity	Unit	Unit Wt	Item Wt(lbs)
Paper	5.000	PINTS	0.969	4.850
Rubber	3.000	PINTS	1.554	4.660
Plastic	4.000	PINTS	0.937	3.750

Waste Parameters

Waste Parameter	Remaining Weight %	Actual Weight Lbs
Iron-based Metals/Alloys	100.000	66.580
Aluminum-based Metals/Alloys	0.000	0.000
Other metals	0.000	0.000
Other Inorganic Materials	0.000	0.000
Cellulosics	0.000	4.850
Rubber	0.000	4.660
Plastic (Waste Materials)	0.000	3.750
Inorganic matrix	0.000	0.000
Organic matrix	0.000	0.000
Soils/gravel	0.000	0.000
Steel (packaging materials)	0.000	26.000
Plastic (packaging materials)	0.000	0.000
Cellulosics Packaging	0.000	0.000
MLLW Waste	0.000	0.000

Esignature History

Esig Approval Id	User Id	E-signature Date	Comment
2729725	SFELLOWS	10-APR-14 05:20:25	
2729726	SHIGH	10-APR-14 05:20:27	

Batch Id VEB14-00098 **Container Id** 10516362 **Analysis Id** 0000316497

VE Date 10-APR-14 05:50:59 **Analysis Status** Pass

Gen-IDC Code BN-508 AMWTP Newly Generated Debris **VE Weight** 123.48 lbs

Closure Date 10-APR-14 05:50:59 **Procedure Id** INST-FOI-17 **Net Weight** 97.48 lbs

Container Type 55 **Revision** 27

Operator 1 SARA FELLOWS **Waste Matrix** S5490 **Summary Category Group** S5000

Operator 2 SHANE HIGH **Equipment ID** VE BiD RPCK

General

Rigid Liner Present? No **Liner Type** NO LINER **Closure Method** No Bags

Liner Punctured? Yes **Layers Of Confinement** 0 **Fill Factor** 75 % **Liner Lid Present** No

Liquids

Liquids Present? No **Comment**

Liquid Between Liner and Drum 0 pints **Other Liquids** 0 pints

Containerized Liquid pints **Total Liquid Amount** 0 pints

Internal Container with Liquid 0 pints

Internal Container with Liquid No

Prohibited Liquids Present No

Containerized Liquid

Contents

Sharp Objects? Yes **Are Sharp Objects Protected?** No

	Value	*Comment*
Prohibited Compressed Gas Present?	No	
Explosives Present?	No	
Pyrophorics Present?	No	
Mercury Present?	No	
PCBs Present?	No	
PCB Mass (lbs)	0	
Wet Cell Batteries Present?	No	
Corrosives,Ignitables or Reactives Present?	No	
Beryllium Contaminates Present?	No	
Hazardous-Only Waste Present?	No	
Is Waste Incompatible with backfill, packaging materials, or shipping container materials?	No	
Sealed Containers Over 4L?	No	

IDC Verification

Is IDC correct? Yes **Recommended IDC** -

IDC Change Reason

Batch Id VEB14-00098 **Container Id** 10516362 **Analysis Id** 0000316497

Visual Exam Comment The remaining waste by weight percent is Iron-based Metals/Alloys consisting of misc. scrap metal.

Source Container

Is there a source container? Yes

Source Container ID	Location	IDC
10291964	destroyed @ 676- BXI/16	SD-177

IDC CODES

Current Container IDC Code: BN-508 **Recommended IDC Code:** -

Waste Material Items

Packaging Materials

Material Item	Quantity	Unit	Unit Wt	Item Wt(lbs)

Waste Items by Weight

Material Item	Quantity	Unit	Unit Wt	Item Wt(lbs)

Waste Items by Volume

Material Item	Quantity	Unit	Unit Wt	Item Wt(lbs)
Oil-Dri (Inside 55 gal drum)	1.000	PINTS	0.420	0.420
Paper	4.000	PINTS	0.969	3.880
Rubber	2.000	PINTS	1.554	3.110
Plastic	5.000	PINTS	0.937	4.690

Waste Parameters

Waste Parameter	Remaining Weight %	Actual Weight Lbs
Iron-based Metals/Alloys	100.000	85.380
Aluminum-based Metals/Alloys	0.000	0.000
Other metals	0.000	0.000
Other Inorganic Materials	0.000	0.420
Cellulosics	0.000	3.880
Rubber	0.000	3.110
Plastic (Waste Materials)	0.000	4.690
Inorganic matrix	0.000	0.000
Organic matrix	0.000	0.000
Soils/gravel	0.000	0.000
Steel (packaging materials)	0.000	26.000
Plastic (packaging materials)	0.000	0.000
Cellulosics Packaging	0.000	0.000
MLLW Waste	0.000	0.000

Esignature History

Esig Approval Id	User Id	E-signature Date	Comment
2729731	SFELLOWS	10-APR-14 05:50:59	
2729732	SHIGH	10-APR-14 05:51:02	

Batch Id VEB14-00098 **Container Id** 10516369 **Analysis Id** 0000316498

VE Date 10-APR-14 07:10:33 **Analysis Status** Pass

Gen-IDC Code BN-508 AMWTP Newly Generated Debris **VE Weight** 44.10 lbs

Closure Date 10-APR-14 07:10:33 **Procedure Id** INST-FOI-17 **Net Weight** 18.10 lbs

Container Type 55 **Revision** 27

Operator 1 TRACY PARK **Waste Matrix** S5490 **Summary Category Group** S5000

Operator 2 DARREN BUTTE **Equipment ID** VE BiD RPCK

General

Rigid Liner Present? No **Liner Type** NO LINER **Closure Method** No Bags

Liner Punctured? Yes **Layers Of Confinement** 0 **Fill Factor** 60 % **Liner Lid Present** No

Liquids

Liquids Present? No **Comment**

Liquid Between Liner and Drum 0 pints **Other Liquids** 0 pints

Containerized Liquid pints **Total Liquid Amount** 0 pints

Internal Container with Liquid 0 pints

Internal Container with Liquid No

Prohibited Liquids Present No

Containerized Liquid

Contents

Sharp Objects? No **Are Sharp Objects Protected?** Yes

	Value	*Comment*
Prohibited Compressed Gas Present?	No	
Explosives Present?	No	
Pyrophorics Present?	No	
Mercury Present?	No	
PCBs Present?	No	
PCB Mass (lbs)	0	
Wet Cell Batteries Present?	No	
Corrosives,Ignitables or Reactives Present?	No	
Beryllium Contaminates Present?	No	
Hazardous-Only Waste Present?	No	
Is Waste Incompatible with backfill, packaging materials, or shipping container materials?	No	
Sealed Containers Over 4L?	No	

IDC Verification

Is IDC correct? Yes **Recommended IDC** -

IDC Change Reason

Batch Id VEB14-00098 **Container Id** 10516369 **Analysis Id** 0000316498

Visual Exam Comment Remaining waste by weight percent is Plastic (Waste Material) Consisiting of PPE, Bubble Suites and Airline Hoses.

Source Container

Is there a source container? Yes

Source Container ID	Location	IDC
10316158	destroyed @ 676- BXI/6	SD-177

IDC CODES

Current Container IDC Code: BN-508 **Recommended IDC Code:** -

Waste Material Items

Packaging Materials

Material Item	Quantity	Unit	Unit Wt	Item Wt(lbs)

Waste Items by Weight

Material Item	Quantity	Unit	Unit Wt	Item Wt(lbs)

Waste Items by Volume

Material Item	Quantity	Unit	Unit Wt	Item Wt(lbs)
Rubber	1.000	PINTS	1.554	1.550

Waste Parameters

Waste Parameter	Remaining Weight %	Actual Weight Lbs
Iron-based Metals/Alloys	0.000	0.000
Aluminum-based Metals/Alloys	0.000	0.000
Other metals	0.000	0.000
Other Inorganic Materials	0.000	0.000
Cellulosics	0.000	0.000
Rubber	0.000	1.550
Plastic (Waste Materials)	100.000	16.550
Inorganic matrix	0.000	0.000
Organic matrix	0.000	0.000
Soils/gravel	0.000	0.000
Steel (packaging materials)	0.000	26.000
Plastic (packaging materials)	0.000	0.000
Cellulosics Packaging	0.000	0.000
MLLW Waste	0.000	0.000

Esignature History

Esig Approval Id	User Id	E-signature Date	Comment
2729768	PARKT	10-APR-14 07:10:34	
2729769	DBUTTE	10-APR-14 07:10:36	

Batch Id VEB14-00098 **Container Id** 10516353 **Analysis Id** 0000316499

VE Date 10-APR-14 07:12:14 **Analysis Status** Pass

Gen-IDC Code BN-508 AMWTP Newly Generated Debris **VE Weight** 68.36 lbs

Closure Date 10-APR-14 07:12:14 **Procedure Id** INST-FOI-17 **Net Weight** 42.36 lbs

Container Type 55 **Revision** 27

Operator 1 TRACY PARK **Waste Matrix** S5490 **Summary Category Group** S5000

Operator 2 DARREN BUTTE **Equipment ID** VE BiD RPCK

General

Rigid Liner Present? No **Liner Type** NO LINER **Closure Method** No Bags

Liner Punctured? Yes **Layers Of Confinement** 0 **Fill Factor** 60 % **Liner Lid Present** No

Liquids

Liquids Present? No **Comment**

Liquid Between Liner and Drum 0 pints **Other Liquids** 0 pints

Containerized Liquid pints **Total Liquid Amount** 0 pints

Internal Container with Liquid 0 pints

Internal Container with Liquid No

Prohibited Liquids Present No

Containerized Liquid

Contents

Sharp Objects? No **Are Sharp Objects Protected?** Yes

	Value	*Comment*
Prohibited Compressed Gas Present?	No	
Explosives Present?	No	
Pyrophorics Present?	No	
Mercury Present?	No	
PCBs Present?	No	
PCB Mass (lbs)	0	
Wet Cell Batteries Present?	No	
Corrosives,Ignitables or Reactives Present?	No	
Beryllium Contaminates Present?	No	
Hazardous-Only Waste Present?	No	
Is Waste Incompatible with backfill, packaging materials, or shipping container materials?	No	
Sealed Containers Over 4L?	No	

IDC Verification

Is IDC correct? Yes **Recommended IDC** -

IDC Change Reason

Batch Id VEB14-00098 **Container Id** 10516353 **Analysis Id** 0000316499

Visual Exam Comment Remaining waste by weight percent is Plastic (Waste Material) Consisiting of PPE, Bubble Suites and Airline Hoses.

Source Container

Is there a source container? Yes

Source Container ID	Location	IDC
10316158	destroyed @ 676- BXI/6	SD-177

IDC CODES

Current Container IDC Code: BN-508 **Recommended IDC Code:** -

Waste Material Items

Packaging Materials

Material Item	Quantity	Unit	Unit Wt	Item Wt(lbs)

Waste Items by Weight

Material Item	Quantity	Unit	Unit Wt	Item Wt(lbs)

Waste Items by Volume

Material Item	Quantity	Unit	Unit Wt	Item Wt(lbs)
Rubber	1.000	PINTS	1.554	1.550

Waste Parameters

Waste Parameter	Remaining Weight %	Actual Weight Lbs
Iron-based Metals/Alloys	0.000	0.000
Aluminum-based Metals/Alloys	0.000	0.000
Other metals	0.000	0.000
Other Inorganic Materials	0.000	0.000
Cellulosics	0.000	0.000
Rubber	0.000	1.550
Plastic (Waste Materials)	100.000	40.805
Inorganic matrix	0.000	0.000
Organic matrix	0.000	0.000
Soils/gravel	0.000	0.000
Steel (packaging materials)	0.000	26.000
Plastic (packaging materials)	0.000	0.000
Cellulosics Packaging	0.000	0.000
MLLW Waste	0.000	0.000

Esignature History

Esig Approval Id	User Id	E-signature Date	Comment
2729770	PARKT	10-APR-14 07:12:14	
2729771	DBUTTE	10-APR-14 07:12:16	

Batch Id VEB14-00098 **Container Id** 10516355 **Analysis Id** 0000316516

VE Date 10-APR-14 13:20:04 **Analysis Status** Pass

Gen-IDC Code BN-508 AMWTP Newly Generated Debris **VE Weight** 72.77 lbs

Closure Date 10-APR-14 13:20:04 **Procedure Id** INST-FOI-17 **Net Weight** 46.77 lbs

Container Type 55 **Revision** 27

Operator 1 ROSS J GUNNING **Waste Matrix** S5490 **Summary Category Group** S5000

Operator 2 DARREN BUTTE **Equipment ID** VE BiD RPCK

General

Rigid Liner Present? No **Liner Type** NO LINER **Closure Method** No Bags

Liner Punctured? Yes **Layers Of Confinement** 0 **Fill Factor** 65 % **Liner Lid Present** No

Liquids

Liquids Present? No **Comment**

Liquid Between Liner and Drum 0 pints **Other Liquids** 0 pints

Containerized Liquid pints **Total Liquid Amount** 0 pints

Internal Container with Liquid 0 pints

Internal Container with Liquid No

Prohibited Liquids Present No

Containerized Liquid

Contents

Sharp Objects? Yes **Are Sharp Objects Protected?** No

	Value	Comment
Prohibited Compressed Gas Present?	No	
Explosives Present?	No	
Pyrophorics Present?	No	
Mercury Present?	No	
PCBs Present?	No	
PCB Mass (lbs)	0	
Wet Cell Batteries Present?	No	
Corrosives,Ignitables or Reactives Present?	No	
Beryllium Contaminates Present?	No	
Hazardous-Only Waste Present?	No	
Is Waste Incompatible with backfill, packaging materials, or shipping container materials?	No	
Sealed Containers Over 4L?	No	

IDC Verification

Is IDC correct? Yes **Recommended IDC** -

IDC Change Reason

Batch Id VEB14-00098 **Container Id** 10516355 **Analysis Id** 0000316516

Visual Exam Comment Remaining waste by weight percent is plastic consisting of bubble suit, air hoses, and PPE. Waste is from a 345 entry. RJG and DJB 04/10/14

Source Container

Is there a source container? Yes

Source Container ID	Location	IDC
10291964	destroyed @ 676- BXI/16	SD-177

IDC CODES

Current Container IDC Code: BN-508 **Recommended IDC Code:** -

Waste Material Items

Packaging Materials

Material Item	Quantity	Unit	Unit Wt	Item Wt(lbs)

Waste Items by Weight

Material Item	Quantity	Unit	Unit Wt	Item Wt(lbs)

Waste Items by Volume

Material Item	Quantity	Unit	Unit Wt	Item Wt(lbs)
Rubber	1.300	PINTS	1.554	2.020
Iron	1.000	PINTS	7.807	7.810

Waste Parameters

Waste Parameter	Remaining Weight %	Actual Weight Lbs
Iron-based Metals/Alloys	0.000	7.810
Aluminum-based Metals/Alloys	0.000	0.000
Other metals	0.000	0.000
Other Inorganic Materials	0.000	0.000
Cellulosics	0.000	0.000
Rubber	0.000	2.020
Plastic (Waste Materials)	100.000	36.935
Inorganic matrix	0.000	0.000
Organic matrix	0.000	0.000
Soils/gravel	0.000	0.000
Steel (packaging materials)	0.000	26.000
Plastic (packaging materials)	0.000	0.000
Cellulosics Packaging	0.000	0.000
MLLW Waste	0.000	0.000

Esignature History

Esig Approval Id	User Id	E-signature Date	Comment
2730064	RGUNNING	10-APR-14 13:20:05	
2730065	DBUTTE	10-APR-14 13:20:07	

Batch Id VEB14-00098 **Container Id** 10516351 **Analysis Id** 0000316517

VE Date 10-APR-14 12:35:19 **Analysis Status** Pass

Gen-IDC Code BN-508 AMWTP Newly Generated Debris **VE Weight** 103.64 lbs

Closure Date 10-APR-14 12:35:19 **Procedure Id** INST-FOI-17 **Net Weight** 77.64 lbs

Container Type 55 **Revision** 27

Operator 1 ANTHONY CAIN **Waste Matrix** S5490 **Summary Category Group** S5000

Operator 2 KEN DOWNS **Equipment ID** VE BiD RPCK

General

Rigid Liner Present? No **Liner Type** NO LINER **Closure Method** No Bags

Liner Punctured? Yes **Layers Of Confinement** 0 **Fill Factor** 66 % **Liner Lid Present** No

Liquids

Liquids Present? No **Comment**

Liquid Between Liner and Drum 0 pints **Other Liquids** 0 pints

Containerized Liquid pints **Total Liquid Amount** 0 pints

Internal Container with Liquid 0 pints

Internal Container with Liquid No

Prohibited Liquids Present No

Containerized Liquid

Contents

Sharp Objects? Yes **Are Sharp Objects Protected?** No

	Value	Comment
Prohibited Compressed Gas Present?	No	
Explosives Present?	No	
Pyrophorics Present?	No	
Mercury Present?	No	
PCBs Present?	No	
PCB Mass (lbs)	0	
Wet Cell Batteries Present?	No	
Corrosives,Ignitables or Reactives Present?	No	
Beryllium Contaminates Present?	No	
Hazardous-Only Waste Present?	No	
Is Waste Incompatible with backfill, packaging materials, or shipping container materials?	No	
Sealed Containers Over 4L?	No	

IDC Verification

Is IDC correct? Yes **Recommended IDC** -

IDC Change Reason

Batch Id VEB14-00098 **Container Id** 10516351 **Analysis Id** 0000316517

Visual Exam Comment Remaining waste by weight percent is Plastic (Waste Material) consisting of plastic bags, sheeting and tape.

Source Container

Is there a source container? Yes

Source Container ID	Location	IDC
10291964	destroyed @ 676- BXI/16	SD-177

IDC CODES

Current Container IDC Code: BN-508 **Recommended IDC Code:** -

Waste Material Items

Packaging Materials

Material Item	Quantity	Unit	Unit Wt	Item Wt(lbs)

Waste Items by Weight

Material Item	Quantity	Unit	Unit Wt	Item Wt(lbs)

Waste Items by Volume

Material Item	Quantity	Unit	Unit Wt	Item Wt(lbs)
Rubber	7.000	PINTS	1.554	10.880
Copper	0.500	PINTS	9.369	4.680

Waste Parameters

Waste Parameter	Remaining Weight %	Actual Weight Lbs
Iron-based Metals/Alloys	0.000	0.000
Aluminum-based Metals/Alloys	0.000	0.000
Other metals	0.000	4.680
Other Inorganic Materials	0.000	0.000
Cellulosics	0.000	0.000
Rubber	0.000	10.880
Plastic (Waste Materials)	100.000	62.075
Inorganic matrix	0.000	0.000
Organic matrix	0.000	0.000
Soils/gravel	0.000	0.000
Steel (packaging materials)	0.000	26.000
Plastic (packaging materials)	0.000	0.000
Cellulosics Packaging	0.000	0.000
MLLW Waste	0.000	0.000

Esignature History

Esig Approval Id	User Id	E-signature Date	Comment
2730052	TCAIN	10-APR-14 12:35:20	
2730053	KDOWNS	10-APR-14 12:35:24	

Batch Id VEB14-00098 **Container Id** 10516365 **Analysis Id** 0000316519

VE Date 10-APR-14 13:22:16 **Analysis Status** Pass

Gen-IDC Code BN-508 AMWTP Newly Generated Debris **VE Weight** 77.18 lbs

Closure Date 10-APR-14 13:22:16 **Procedure Id** INST-FOI-17 **Net Weight** 51.18 lbs

Container Type 55 **Revision** 27

Operator 1 ROSS J GUNNING **Waste Matrix** S5490 **Summary Category Group** S5000

Operator 2 DARREN BUTTE **Equipment ID** VE BiD RPCK

General

Rigid Liner Present? No **Liner Type** NO LINER **Closure Method** No Bags

Liner Punctured? Yes **Layers Of Confinement** 0 **Fill Factor** 65 % **Liner Lid Present** No

Liquids

Liquids Present? No **Comment**

Liquid Between Liner and Drum 0 pints **Other Liquids** 0 pints

Containerized Liquid pints **Total Liquid Amount** 0 pints

Internal Container with Liquid 0 pints

Internal Container with Liquid No

Prohibited Liquids Present No

Containerized Liquid

Contents

Sharp Objects? Yes **Are Sharp Objects Protected?** No

	Value	*Comment*
Prohibited Compressed Gas Present?	No	
Explosives Present?	No	
Pyrophorics Present?	No	
Mercury Present?	No	
PCBs Present?	No	
PCB Mass (lbs)	0	
Wet Cell Batteries Present?	No	
Corrosives,Ignitables or Reactives Present?	No	
Beryllium Contaminates Present?	No	
Hazardous-Only Waste Present?	No	
Is Waste Incompatible with backfill, packaging materials, or shipping container materials?	No	
Sealed Containers Over 4L?	No	

IDC Verification

Is IDC correct? Yes **Recommended IDC** -

IDC Change Reason

Batch Id VEB14-00098 **Container Id** 10516365 **Analysis Id** 0000316519

Visual Exam Comment Remaining waste by weight percent is plastic consisting of air hoses and PPE. Waste is from a 345 entry. RJG and DJB 04/10/14

Source Container

Is there a source container? Yes

Source Container ID	Location	IDC
10291964	destroyed @ 676- BXI/16	SD-177

IDC CODES

Current Container IDC Code: BN-508 **Recommended IDC Code:** -

Waste Material Items

Packaging Materials

Material Item	Quantity	Unit	Unit Wt	Item Wt(lbs)

Waste Items by Weight

Material Item	Quantity	Unit	Unit Wt	Item Wt(lbs)

Waste Items by Volume

Material Item	Quantity	Unit	Unit Wt	Item Wt(lbs)
Iron	2.000	PINTS	7.807	15.610

Waste Parameters

Waste Parameter	Remaining Weight %	Actual Weight Lbs
Iron-based Metals/Alloys	0.000	15.610
Aluminum-based Metals/Alloys	0.000	0.000
Other metals	0.000	0.000
Other Inorganic Materials	0.000	0.000
Cellulosics	0.000	0.000
Rubber	0.000	0.000
Plastic (Waste Materials)	100.000	35.565
Inorganic matrix	0.000	0.000
Organic matrix	0.000	0.000
Soils/gravel	0.000	0.000
Steel (packaging materials)	0.000	26.000
Plastic (packaging materials)	0.000	0.000
Cellulosics Packaging	0.000	0.000
MLLW Waste	0.000	0.000

Esignature History

Esig Approval Id	User Id	E-signature Date	Comment
2730066	RGUNNING	10-APR-14 13:22:16	
2730067	DBUTTE	10-APR-14 13:22:18	

Batch Id VEB14-00098 **Container Id** 10516357 **Analysis Id** 0000316523

VE Date 10-APR-14 14:12:17 **Analysis Status** Pass

Gen-IDC Code BN-508 AMWTP Newly Generated Debris **VE Weight** 61.74 lbs

Closure Date 10-APR-14 14:12:17 **Procedure Id** INST-FOI-17 **Net Weight** 35.74 lbs

Container Type 55 **Revision** 27

Operator 1 VIRGIL B WATERS **Waste Matrix** S5490 **Summary Category Group** S5000

Operator 2 MICHAEL BECK **Equipment ID** VE BiD RPCK

General

Rigid Liner Present? No **Liner Type** NO LINER **Closure Method** No Bags

Liner Punctured? Yes **Layers Of Confinement** 0 **Fill Factor** 65 % **Liner Lid Present** No

Liquids

Liquids Present? No **Comment**

Liquid Between Liner and Drum 0 pints **Other Liquids** 0 pints

Containerized Liquid pints **Total Liquid Amount** 0 pints

Internal Container with Liquid 0 pints

Internal Container with Liquid No

Prohibited Liquids Present No

Containerized Liquid

Contents

Sharp Objects? No **Are Sharp Objects Protected?** Yes

	Value	*Comment*
Prohibited Compressed Gas Present?	No	
Explosives Present?	No	
Pyrophorics Present?	No	
Mercury Present?	No	
PCBs Present?	No	
PCB Mass (lbs)	0	
Wet Cell Batteries Present?	No	
Corrosives,Ignitables or Reactives Present?	No	
Beryllium Contaminates Present?	No	
Hazardous-Only Waste Present?	No	
Is Waste Incompatible with backfill, packaging materials, or shipping container materials?	No	
Sealed Containers Over 4L?	No	

IDC Verification

Is IDC correct? Yes **Recommended IDC** -

IDC Change Reason

Batch Id VEB14-00098 **Container Id** 10516357 **Analysis Id** 0000316523

Visual Exam Comment Remaining waste by weight percent is plastic consisting of PPE, bags, sheeting and tape.

Source Container

Is there a source container? Yes

Source Container ID	Location	IDC
10508936	destroyed @ 676- BXI/15	RF-760

IDC CODES

Current Container IDC Code: BN-508 **Recommended IDC Code:** -

Waste Material Items

Packaging Materials

Material Item	Quantity	Unit	Unit Wt	Item Wt(lbs)

Waste Items by Weight

Material Item	Quantity	Unit	Unit Wt	Item Wt(lbs)

Waste Items by Volume

Material Item	Quantity	Unit	Unit Wt	Item Wt(lbs)

Waste Parameters

Waste Parameter	Remaining Weight %	Actual Weight Lbs
Iron-based Metals/Alloys	0.000	0.000
Aluminum-based Metals/Alloys	0.000	0.000
Other metals	0.000	0.000
Other Inorganic Materials	0.000	0.000
Cellulosics	0.000	0.000
Rubber	0.000	0.000
Plastic (Waste Materials)	100.000	35.740
Inorganic matrix	0.000	0.000
Organic matrix	0.000	0.000
Soils/gravel	0.000	0.000
Steel (packaging materials)	0.000	26.000
Plastic (packaging materials)	0.000	0.000
Cellulosics Packaging	0.000	0.000
MLLW Waste	0.000	0.000

Esignature History

Esig Approval Id	User Id	E-signature Date	Comment
2730126	VWATERS	10-APR-14 14:12:17	
2730153	MBECK1	10-APR-14 14:12:19	

Batch Id VEB14-00098 **Container Id** 10516386 **Analysis Id** 0000316524

VE Date 10-APR-14 14:46:39 **Analysis Status** Pass

Gen-IDC Code BN-508 AMWTP Newly Generated Debris **VE Weight** 61.74 lbs

Closure Date 10-APR-14 14:46:39 **Procedure Id** INST-FOI-17 **Net Weight** 35.74 lbs

Container Type 55 **Revision** 27

Operator 1 VIRGIL B WATERS **Waste Matrix** S5490 **Summary Category Group** S5000

Operator 2 MICHAEL BECK **Equipment ID** VE BiD RPCK

General

Rigid Liner Present? No **Liner Type** NO LINER **Closure Method** No Bags

Liner Punctured? Yes **Layers Of Confinement** 0 **Fill Factor** 65 % **Liner Lid Present** No

Liquids

Liquids Present? No **Comment**

Liquid Between Liner and Drum 0 pints **Other Liquids** 0 pints

Containerized Liquid pints **Total Liquid Amount** 0 pints

Internal Container with Liquid 0 pints

Internal Container with Liquid No

Prohibited Liquids Present No

Containerized Liquid

Contents

Sharp Objects? No **Are Sharp Objects Protected?** Yes

	Value	*Comment*
Prohibited Compressed Gas Present?	No	
Explosives Present?	No	
Pyrophorics Present?	No	
Mercury Present?	No	
PCBs Present?	No	
PCB Mass (lbs)	0	
Wet Cell Batteries Present?	No	
Corrosives,Ignitables or Reactives Present?	No	
Beryllium Contaminates Present?	No	
Hazardous-Only Waste Present?	No	
Is Waste Incompatible with backfill, packaging materials, or shipping container materials?	No	
Sealed Containers Over 4L?	No	

IDC Verification

Is IDC correct? Yes **Recommended IDC** -

IDC Change Reason

Batch Id VEB14-00098 **Container Id** 10516386 **Analysis Id** 0000316524

Visual Exam Comment Remaining waste by weight percent is plastic consisting of PPE, bags, sheeting and tape.

Source Container

Is there a source container? Yes

Source Container ID	Location	IDC
10508936	destroyed @ 676- BXI/15	RF-760

IDC CODES

Current Container IDC Code: BN-508 **Recommended IDC Code:** -

Waste Material Items

Packaging Materials

Material Item	Quantity	Unit	Unit Wt	Item Wt(lbs)

Waste Items by Weight

Material Item	Quantity	Unit	Unit Wt	Item Wt(lbs)

Waste Items by Volume

Material Item	Quantity	Unit	Unit Wt	Item Wt(lbs)

Waste Parameters

Waste Parameter	Remaining Weight %	Actual Weight Lbs
Iron-based Metals/Alloys	0.000	0.000
Aluminum-based Metals/Alloys	0.000	0.000
Other metals	0.000	0.000
Other Inorganic Materials	0.000	0.000
Cellulosics	0.000	0.000
Rubber	0.000	0.000
Plastic (Waste Materials)	100.000	35.740
Inorganic matrix	0.000	0.000
Organic matrix	0.000	0.000
Soils/gravel	0.000	0.000
Steel (packaging materials)	0.000	26.000
Plastic (packaging materials)	0.000	0.000
Cellulosics Packaging	0.000	0.000
MLLW Waste	0.000	0.000

Esignature History

Esig Approval Id	User Id	E-signature Date	Comment
2730247	VWATERS	10-APR-14 14:46:40	
2730248	MBECK1	10-APR-14 14:46:44	

Batch Id VEB14-00098 Container Id 10516388 Analysis Id 0000316525

VE Date 10-APR-14 14:53:01 Analysis Status Pass

Gen-IDC Code BN-508 AMWTP Newly Generated Debris VE Weight 88.20 lbs

Closure Date 10-APR-14 14:53:01 Procedure Id INST-FOI-17 Net Weight 62.20 lbs

Container Type 55 Revision 27

Operator 1 VIRGIL B WATERS Waste Matrix S5490 Summary Category Group S5000

Operator 2 MICHAEL BECK Equipment ID VE BiD RPCK

General

Rigid Liner Present? No Liner Type NO LINER Closure Method No Bags

Liner Punctured? Yes Layers Of Confinement 0 Fill Factor 70 % Liner Lid Present No

Liquids

Liquids Present? No Comment

Liquid Between Liner and Drum 0 pints Other Liquids 0 pints

Containerized Liquid pints Total Liquid Amount 0 pints

Internal Container with Liquid 0 pints

Internal Container with Liquid No

Prohibited Liquids Present No

Containerized Liquid

Contents

Sharp Objects? No Are Sharp Objects Protected? Yes

	Value	*Comment*
Prohibited Compressed Gas Present?	No	
Explosives Present?	No	
Pyrophorics Present?	No	
Mercury Present?	No	
PCBs Present?	No	
PCB Mass (lbs)	0	
Wet Cell Batteries Present?	No	
Corrosives,Ignitables or Reactives Present?	No	
Beryllium Contaminates Present?	No	
Hazardous-Only Waste Present?	No	
Is Waste Incompatible with backfill, packaging materials, or shipping container materials?	No	
Sealed Containers Over 4L?	No	

IDC Verification

Is IDC correct? Yes Recommended IDC -

IDC Change Reason

Batch Id VEB14-00098 Container Id 10516388 Analysis Id 0000316525

Visual Exam Comment Remaining waste by weight percent is plastic consisting of PPE, bags, sheeting and tape.

Source Container

Is there a source container? Yes

Source Container ID	Location	IDC
10508936	destroyed @ 676- BXI/15	RF-760

IDC CODES

Current Container IDC Code: BN-508 **Recommended IDC Code:** -

Waste Material Items

Packaging Materials

Material Item	Quantity	Unit	Unit Wt	Item Wt(lbs)

Waste Items by Weight

Material Item	Quantity	Unit	Unit Wt	Item Wt(lbs)

Waste Items by Volume

Material Item	Quantity	Unit	Unit Wt	Item Wt(lbs)

Waste Parameters

Waste Parameter	Remaining Weight %	Actual Weight Lbs
Iron-based Metals/Alloys	0.000	0.000
Aluminum-based Metals/Alloys	0.000	0.000
Other metals	0.000	0.000
Other Inorganic Materials	0.000	0.000
Cellulosics	0.000	0.000
Rubber	0.000	0.000
Plastic (Waste Materials)	100.000	62.200
Inorganic matrix	0.000	0.000
Organic matrix	0.000	0.000
Soils/gravel	0.000	0.000
Steel (packaging materials)	0.000	26.000
Plastic (packaging materials)	0.000	0.000
Cellulosics Packaging	0.000	0.000
MLLW Waste	0.000	0.000

Esignature History

Esig Approval Id	User Id	E-signature Date	Comment
2730260	VWATERS	10-APR-14 14:53:02	
2730261	MBECK1	10-APR-14 14:53:05	

Batch Id VEB14-00098 **Container Id** 10516356 **Analysis Id** 0000316526

VE Date 10-APR-14 14:59:24 **Analysis Status** Pass

Gen-IDC Code BN-508 AMWTP Newly Generated Debris **VE Weight** 66.15 lbs

Closure Date 10-APR-14 14:59:24 **Procedure Id** INST-FOI-17 **Net Weight** 40.15 lbs

Container Type 55 **Revision** 27

Operator 1 VIRGIL B WATERS **Waste Matrix** S5490 **Summary Category Group** S5000

Operator 2 MICHAEL BECK **Equipment ID** VE BiD RPCK

General

Rigid Liner Present? No **Liner Type** NO LINER **Closure Method** No Bags

Liner Punctured? Yes **Layers Of Confinement** 0 **Fill Factor** 65 % **Liner Lid Present** No

Liquids

Liquids Present? No **Comment**

Liquid Between Liner and Drum 0 pints **Other Liquids** 0 pints

Containerized Liquid pints **Total Liquid Amount** 0 pints

Internal Container with Liquid 0 pints

Internal Container with Liquid No

Prohibited Liquids Present No

Containerized Liquid

Contents

Sharp Objects? No **Are Sharp Objects Protected?** Yes

	Value	*Comment*
Prohibited Compressed Gas Present?	No	
Explosives Present?	No	
Pyrophorics Present?	No	
Mercury Present?	No	
PCBs Present?	No	
PCB Mass (lbs)	0	
Wet Cell Batteries Present?	No	
Corrosives,Ignitables or Reactives Present?	No	
Beryllium Contaminates Present?	No	
Hazardous-Only Waste Present?	No	
Is Waste Incompatible with backfill, packaging materials, or shipping container materials?	No	
Sealed Containers Over 4L?	No	

IDC Verification

Is IDC correct? Yes **Recommended IDC** -

IDC Change Reason

Batch Id VEB14-00098 **Container Id** 10516356 **Analysis Id** 0000316526

Visual Exam Comment Remaining waste by weight percent is plastic consisting of PPE, bags, sheeting and tape.

Source Container

Is there a source container? Yes

Source Container ID	Location	IDC
10508936	destroyed @ 676- BXI/15	RF-760

IDC CODES

Current Container IDC Code: BN-508 **Recommended IDC Code:** -

Waste Material Items

Packaging Materials

Material Item	Quantity	Unit	Unit Wt	Item Wt(lbs)

Waste Items by Weight

Material Item	Quantity	Unit	Unit Wt	Item Wt(lbs)

Waste Items by Volume

Material Item	Quantity	Unit	Unit Wt	Item Wt(lbs)

Waste Parameters

Waste Parameter	Remaining Weight %	Actual Weight Lbs
Iron-based Metals/Alloys	0.000	0.000
Aluminum-based Metals/Alloys	0.000	0.000
Other metals	0.000	0.000
Other Inorganic Materials	0.000	0.000
Cellulosics	0.000	0.000
Rubber	0.000	0.000
Plastic (Waste Materials)	100.000	40.150
Inorganic matrix	0.000	0.000
Organic matrix	0.000	0.000
Soils/gravel	0.000	0.000
Steel (packaging materials)	0.000	26.000
Plastic (packaging materials)	0.000	0.000
Cellulosics Packaging	0.000	0.000
MLLW Waste	0.000	0.000

Esignature History

Esig Approval Id	User Id	E-signature Date	Comment
2730269	VWATERS	10-APR-14 14:59:25	
2730270	MBECK1	10-APR-14 14:59:35	

Batch Id VEB14-00098 **Container Id** 10516391 **Analysis Id** 0000316527

VE Date 10-APR-14 15:07:39 **Analysis Status** Pass

Gen-IDC Code BN-508 AMWTP Newly Generated Debris **VE Weight** 72.77 lbs

Closure Date 10-APR-14 15:07:39 **Procedure Id** INST-FOI-17 **Net Weight** 46.77 lbs

Container Type 55 **Revision** 27

Operator 1 VIRGIL B WATERS **Waste Matrix** S5490 **Summary Category Group** S5000

Operator 2 MICHAEL BECK **Equipment ID** VE BiD RPCK

General

Rigid Liner Present? No **Liner Type** NO LINER **Closure Method** No Bags

Liner Punctured? Yes **Layers Of Confinement** 0 **Fill Factor** 65 % **Liner Lid Present** No

Liquids

Liquids Present? No **Comment**

Liquid Between Liner and Drum 0 pints **Other Liquids** 0 pints

Containerized Liquid pints **Total Liquid Amount** 0 pints

Internal Container with Liquid 0 pints

Internal Container with Liquid No

Prohibited Liquids Present No

Containerized Liquid

Contents

Sharp Objects? No **Are Sharp Objects Protected?** Yes

	Value	*Comment*
Prohibited Compressed Gas Present?	No	
Explosives Present?	No	
Pyrophorics Present?	No	
Mercury Present?	No	
PCBs Present?	No	
PCB Mass (lbs)	0	
Wet Cell Batteries Present?	No	
Corrosives,Ignitables or Reactives Present?	No	
Beryllium Contaminates Present?	No	
Hazardous-Only Waste Present?	No	
Is Waste Incompatible with backfill, packaging materials, or shipping container materials?	No	
Sealed Containers Over 4L?	No	

IDC Verification

Is IDC correct? Yes **Recommended IDC** -

IDC Change Reason

Batch Id VEB14-00098 **Container Id** 10516391 **Analysis Id** 0000316527

Visual Exam Comment Remaining waste by weight percent is plastic consisting of PPE, bags, sheeting and tape.

Source Container

Is there a source container? Yes

Source Container ID	Location	IDC
10508936	destroyed @ 676- BXI/15	RF-760

IDC CODES

Current Container IDC Code: BN-508 **Recommended IDC Code:** -

Waste Material Items

Packaging Materials

Material Item	Quantity	Unit	Unit Wt	Item Wt(lbs)

Waste Items by Weight

Material Item	Quantity	Unit	Unit Wt	Item Wt(lbs)

Waste Items by Volume

Material Item	Quantity	Unit	Unit Wt	Item Wt(lbs)

Waste Parameters

Waste Parameter	Remaining Weight %	Actual Weight Lbs
Iron-based Metals/Alloys	0.000	0.000
Aluminum-based Metals/Alloys	0.000	0.000
Other metals	0.000	0.000
Other Inorganic Materials	0.000	0.000
Cellulosics	0.000	0.000
Rubber	0.000	0.000
Plastic (Waste Materials)	100.000	46.765
Inorganic matrix	0.000	0.000
Organic matrix	0.000	0.000
Soils/gravel	0.000	0.000
Steel (packaging materials)	0.000	26.000
Plastic (packaging materials)	0.000	0.000
Cellulosics Packaging	0.000	0.000
MLLW Waste	0.000	0.000

Esignature History

Esig Approval Id	User Id	E-signature Date	Comment
2730289	VWATERS	10-APR-14 15:07:39	
2730290	MBECK1	10-APR-14 15:07:42	

Batch Id VEB14-00098 **Container Id** 10516376 **Analysis Id** 0000316528

VE Date 10-APR-14 15:19:11 **Analysis Status** Pass

Gen-IDC Code BN-508 AMWTP Newly Generated Debris **VE Weight** 149.94 lbs

Closure Date 10-APR-14 15:19:11 **Procedure Id** INST-FOI-17 **Net Weight** 123.94 lbs

Container Type 55 **Revision** 27

Operator 1 VIRGIL B WATERS **Waste Matrix** S5490 **Summary Category Group** S5000

Operator 2 MICHAEL BECK **Equipment ID** VE BiD RPCK

General

Rigid Liner Present? No **Liner Type** NO LINER **Closure Method** No Bags

Liner Punctured? Yes **Layers Of Confinement** 0 **Fill Factor** 60 % **Liner Lid Present** No

Liquids

Liquids Present? No **Comment**

Liquid Between Liner and Drum 0 pints **Other Liquids** 0 pints

Containerized Liquid pints **Total Liquid Amount** 0 pints

Internal Container with Liquid 0 pints

Internal Container with Liquid No

Prohibited Liquids Present No

Containerized Liquid

Contents

Sharp Objects? No **Are Sharp Objects Protected?** Yes

	Value	Comment
Prohibited Compressed Gas Present?	No	
Explosives Present?	No	
Pyrophorics Present?	No	
Mercury Present?	No	
PCBs Present?	No	
PCB Mass (lbs)	0	
Wet Cell Batteries Present?	No	
Corrosives,Ignitables or Reactives Present?	No	
Beryllium Contaminates Present?	No	
Hazardous-Only Waste Present?	No	
Is Waste Incompatible with backfill, packaging materials, or shipping container materials?	No	
Sealed Containers Over 4L?	No	

IDC Verification

Is IDC correct? Yes **Recommended IDC** -

IDC Change Reason

Batch Id VEB14-00098 **Container Id** 10516376 **Analysis Id** 0000316528

Visual Exam Comment Remaining waste by weight percent is plastic consisting of PPE, bags, sheeting, hose, and tape.

Source Container

Is there a source container? Yes

Source Container ID	Location	IDC
10508936	destroyed @ 676- BXI/15	RF-760

IDC CODES

Current Container IDC Code: BN-508 **Recommended IDC Code:** -

Waste Material Items

Packaging Materials

Material Item	Quantity	Unit	Unit Wt	Item Wt(lbs)

Waste Items by Weight

Material Item	Quantity	Unit	Unit Wt	Item Wt(lbs)

Waste Items by Volume

Material Item	Quantity	Unit	Unit Wt	Item Wt(lbs)

Waste Parameters

Waste Parameter	Remaining Weight %	Actual Weight Lbs
Iron-based Metals/Alloys	0.000	0.000
Aluminum-based Metals/Alloys	0.000	0.000
Other metals	0.000	0.000
Other Inorganic Materials	0.000	0.000
Cellulosics	0.000	0.000
Rubber	0.000	0.000
Plastic (Waste Materials)	100.000	123.940
Inorganic matrix	0.000	0.000
Organic matrix	0.000	0.000
Soils/gravel	0.000	0.000
Steel (packaging materials)	0.000	26.000
Plastic (packaging materials)	0.000	0.000
Cellulosics Packaging	0.000	0.000
MLLW Waste	0.000	0.000

Esignature History

Esig Approval Id	User Id	E-signature Date	Comment
2730304	VWATERS	10-APR-14 15:19:11	
2730305	MBECK1	10-APR-14 15:19:13	

Batch Id VEB14-00098 **Container Id** 10516354 **Analysis Id** 0000316529

VE Date 10-APR-14 15:26:19 **Analysis Status** Pass

Gen-IDC Code BN-508 AMWTP Newly Generated Debris **VE Weight** 187.43 lbs

Closure Date 10-APR-14 15:26:19 **Procedure Id** INST-FOI-17 **Net Weight** 161.43 lbs

Container Type 55 **Revision** 27

Operator 1 ANTHONY CAIN **Waste Matrix** S5490 **Summary Category Group** S5000

Operator 2 KEN DOWNS **Equipment ID** VE BiD RPCK

General

Rigid Liner Present? No **Liner Type** NO LINER **Closure Method** No Bags

Liner Punctured? Yes **Layers Of Confinement** 0 **Fill Factor** 68 % **Liner Lid Present** No

Liquids

Liquids Present? No **Comment**

Liquid Between Liner and Drum 0 pints **Other Liquids** 0 pints

Containerized Liquid pints **Total Liquid Amount** 0 pints

Internal Container with Liquid 0 pints

Internal Container with Liquid No

Prohibited Liquids Present No

Containerized Liquid

Contents

Sharp Objects? Yes **Are Sharp Objects Protected?** No

	Value	*Comment*
Prohibited Compressed Gas Present?	No	
Explosives Present?	No	
Pyrophorics Present?	No	
Mercury Present?	No	
PCBs Present?	No	
PCB Mass (lbs)	0	
Wet Cell Batteries Present?	No	
Corrosives,Ignitables or Reactives Present?	No	
Beryllium Contaminates Present?	No	
Hazardous-Only Waste Present?	No	
Is Waste Incompatible with backfill, packaging materials, or shipping container materials?	No	
Sealed Containers Over 4L?	No	

IDC Verification

Is IDC correct? Yes **Recommended IDC** -

IDC Change Reason

Batch Id VEB14-00098 **Container Id** 10516354 **Analysis Id** 0000316529

Visual Exam Comment Remaining waste by weight percent is Iron based Metals/Alloys consisting of misc. scrap metal.

Source Container

Is there a source container? Yes

Source Container ID	Location	IDC
10291964	destroyed @ 676- BXI/16	SD-177

IDC CODES

Current Container IDC Code: BN-508 **Recommended IDC Code:** -

Waste Material Items

Packaging Materials

Material Item	Quantity	Unit	Unit Wt	Item Wt(lbs)

Waste Items by Weight

Material Item	Quantity	Unit	Unit Wt	Item Wt(lbs)

Waste Items by Volume

Material Item	Quantity	Unit	Unit Wt	Item Wt(lbs)
Paper	5.000	PINTS	0.969	4.850
Plastic	12.000	PINTS	0.937	11.240

Waste Parameters

Waste Parameter	Remaining Weight %	Actual Weight Lbs
Iron-based Metals/Alloys	100.000	145.335
Aluminum-based Metals/Alloys	0.000	0.000
Other metals	0.000	0.000
Other Inorganic Materials	0.000	0.000
Cellulosics	0.000	4.850
Rubber	0.000	0.000
Plastic (Waste Materials)	0.000	11.240
Inorganic matrix	0.000	0.000
Organic matrix	0.000	0.000
Soils/gravel	0.000	0.000
Steel (packaging materials)	0.000	26.000
Plastic (packaging materials)	0.000	0.000
Cellulosics Packaging	0.000	0.000
MLLW Waste	0.000	0.000

Esignature History

Esig Approval Id	User Id	E-signature Date	Comment
2730330	TCAIN	10-APR-14 15:26:19	
2730332	KDOWNS	10-APR-14 15:26:23	

-----End of VE Boxline Report-----

AMWTP
Advanced Mixed Waste Treatment Project

AMWTP

Checklist Report

Date: 22-Sep-2014

Time: 06:49

Batch Id VEB14-00098 **Open Date** 10-APR-14 **Close Date** 10-APR-14

Reviewer CRAIG SIMMONS **Approval Level** Independent Technical Reviewer

Approval Date 13-APR-14 **Review Iteration** 1

Question Text	Answer	Requirement	Comment
1. Is the QA documentation for the Batch Data Reports complete and includes data reports and QC results? o VE Batch Coversheet o Table of Contents (manual review only) o VE Analysis Reports o Analytical Balance Calibration Check Sheet (Form-1215), if applicable (manual review only) o ITR Checklist (Form-1415, manual review only) o Batch Data Report Supplemental Comment Form (Form-1491, manual review only) o Associated NCRs (referenced in WTS) o Audio/Video Recording References, if applicable	Yes		
2. Are there 20 containers or less in the batch?	Yes		
3. Was each VE Operator qualified at the time of the VE event?	Yes		
4. Was a VE data form completed for each container in the batch?	Yes		
Was the data generated in a technically correct manner using the correct revision of INST-OI-34, Non-facility Visual Examination or INST-FOI-17, Facility Visual Examination Operations, as applicable.	Yes		
6. Was the correct revision of the procedure documented on each analysis report?	Yes		
7. Was the E-signature History review performed?	Yes		
8. Was guidance from VEE documented, as applicable?	N/A		Not applicable for this VEB batch.
9. Does every drum reported in the batch have a valid audio/video recording (as applicable)?	N/A		Not applicable for this VEB batch.
10. Does the physical form match the waste stream description, waste matrix code and IDC?	Yes		
11. Did the VE event result in an IDC/Waste Matrix Code change? If so, was an NCR initiated?	No		
12. Were the waste material parameters documented correctly?	Yes		
13. Was the presence or absence of prohibited items properly identified? o If prohibited items were identified, were NCRs initiated?	Yes		
14. Has the description of rigid liners and layers of confinement been properly documented?	Yes		
15. Was the drum age criteria (DAC) entered correctly and completely? o Closure Method(s) o Liner Puncture Status o Layers of Confinement o Closure Date o Packaging Configuration o Type and number of filters, as applicable o Liner hole presence and diameter, as applicable	Yes		
16. Have filters been installed or removed from drum as recorded in WTS, as applicable?	N/A		Not applicable for this VEB batch.
17. Hand calculations and unit conversions are correct?	Yes		

Batch Id VEB14-00098 **Open Date** 10-APR-14 **Close Date** 10-APR-14

Reviewer CRAIG SIMMONS **Approval Level** Independent Technical Reviewer

Approval Date 13-APR-14 **Review Iteration** 1

Question Text	Answer	Requirement	Comment
o Does the packaging weight plus the net weight equal the gross weight of the drum in the estimated waste material parameters, and for the unit conversions that are entered by volume or weight?			
18. Were all units and significant figures used correct for all reported volumes/weights?	Yes		
19. Has the data been reviewed for transcription errors as appropriate?	Yes		
20. Were the Visual Examination QAOs met? o Precision o Accuracy o Completeness o Comparability	Yes		
21. Is each data form signed by qualified VE Operators, as applicable per the appropriate procedure being used?	Yes		
22. Was the audio/video check satisfactory, as applicable?	N/A		Not applicable for this VEB batch.
23. Was the scale or balance check weight event satisfactory, as applicable?	N/A		Not applicable for this VEB batch.
24. Are the QC weight checks within the tolerance of the scale or balance, as applicable?	N/A		Not applicable for this VEB batch.
25. Were any NCRs generated for drums containing prohibited items or any nonconforming conditions that failed to meet DQOs or QAOs? o Include the NCRs as appropriate, in the Batch Data Report.	No		
26. Were the rework requirements clearly identified in WTS or on the BDR?	N/A		No rework was identified for this batch.

Batch Id VEB14-00098 **Open Date** 10-APR-14 **Close Date** 10-APR-14

Reviewer NICK STYHL **Approval Level** SPM Data Validation

Approval Date 14-APR-14 **Review Iteration** 1

Question Text	Answer	Requirement	Comment
(1) Has the batch received a Data Generation Level Independent Technical Review?	Yes	MP-TRUW-8.2, C3-10b(1)	
(2) Are the batch data review checklists complete?	Yes	MP-TRUW-8.2, C3-10b(1)	
(3) When identified, were PCBs, mercury, lead, or other hazardous contaminants consistent with the waste stream AK Summary Report(s) and/or AK documentation?	N/A	MP-TRUW-8.2, C4-3	None identified.
(4) Are any ignitable, corrosive, or reactive wastes identified?	No	MP-TRUW-8.2, C4-3	
(5) Are the packaging configurations identified on the VE consistent with the waste stream AK Summary Report(s) and/or AK documentation?	Yes	MP-TRUW-8.2, C4-3	
(6) Do the drums in this batch contain typical waste items consistent with waste stream AK Summary Report(s) and/or AK documentation?	Yes	MP-TRUW-8.2, C4-3	
(7) Are the Waste Matrix Codes and physical form descriptions consistent with AK?	Yes	MP-TRUW-8.2, C4-3	
(8) Have all AK discrepancies been resolved and have all AK Resolution checklists been approved? Reference all waste stream AK documentation used in review of this data package.	N/A	MP-TRUW-8.2, C4-3	No discrepancies. MP-TRUW-05, MP-TRUW-06
(9) Does the batch report identify the correct implementing procedure number and revision number used for this testing method?	Yes	MP-TRUW-8.2, C3-4 and Table C3-11	
(10) Have the Waste Matrix Code (WMC) and IDC for all drums in the batch remained the same as originally assigned by the historical designation? NOTE: If not, note the drum number in the comment field and notify the Acceptable Knowledge Expert (AKE) if an NCR does not exist for the WMC and IDC change.	Yes	MP-TRUW-8.2, C-3c and C1-4	The IDC/WMC and summary category for newly generated waste are assigned by the operators during the VE event.
(11) Does the physical form of the waste match the WMC, waste stream description, and identify the absence of prohibited items?	Yes	MP-TRUW-8.2, C-3c and C1-4	
(12) If observable liquids exist in the drum, is an estimate of quantity given?	N/A	MP-TRUW-8.2, C-3c and C1-4	No residual liquids exist.
(13) Precision: Have all discrepancies been reconciled between the operator and the ITR with regard to identification of WMC, liquids in excess of TSDF-WAC limits, and compressed gases?	Yes	MP-TRUW-8.2 C3-4b	
(14) Accuracy: Have all operators passed a comprehensive examination and demonstrated satisfactory performance in the presence of the VE expert during initial and subsequent qualifications?	Yes	MP-TRUW-8.2 C3-4b	
(15) Completeness: Has a validated VE data form been obtained for 100% of the waste containers subject to VE?	Yes	MP-TRUW-8.2 C3-4b	
(16) Comparability: Has the comparability of VE data from different operators been enhanced by use of standardized VE procedures and operator qualifications?	Yes	MP-TRUW-8.2 C3-4b	
(17) Does the data for all containers within this batch meet the review, validation, and verification requirements?	Yes	MP-TRUW-8.2, C3-10b and Table C3-11	

Batch Id VEB14-00098 **Open Date** 10-APR-14 **Close Date** 10-APR-14

Reviewer NICK STYHL **Approval Level** SPM Data Validation

Approval Date 14-APR-14 **Review Iteration** 1

Question Text	Answer	Requirement	Comment
· Are proper units (e.g. Liters or pounds) and significant figure used? · Is the BDR complete (all pages identified in the BDR and numbered according)? - VE Batch Coversheet - Table of Contents (manual review only) - VE Analysis Reports - Analytical Balance Calibration Checklist (if applicable) - ITR Checklist (Form-1415) - Associated NCRs - Audio/Video Recordings (if applicable)			
(18) Do the drum reports contain the (a) Batch Data Report number and date, (b) waste container number (c)WMC, (d) implementing procedure and revision, (e) audio/video recording reference, (f) audio and video QC checks were performed and satisfactory, (g) verification that the physical form matches the waste stream description and WMC, (h) absence of prohibited items, (i) gross container weight, (j) waste material parameter weights, and (k) signature and date of examination (signatures of both operators when applicable)?	Yes	MP-TRUW-8.2, C1-4 and Table C3-11	Audio/Video recording and QC checks reference not applicable.
(19) Is the description of container contents detailed enough to provide verification of estimated weights for the waste matrix parameters identified?	Yes	MP-TRUW-8.2, C1-4 and Table C3-11	
(20) Is there a valid second weight check for every 10 items?	N/A	MP-TRUW-8.2, C1-4	Scales were not used during this VE event.
(21) Verification of two operator signatures when doing VE?	Yes	MP-TRUW-8.2, C-3d(1) and Table C3-11	
(22) Are there 20 or fewer containers in the batch?	Yes	MP-TRUW-8.2, C1-3 and C3-10	
(23) Review all NCRs (open and closed). Can the batch be approved?	Yes	MP-TRUW-8.2, C3-13	
(24) All data associated with this BDR is acceptable for signature release?	Yes	MP-TRUW-8.2, C3-10b and C3-10b(1)	

Batch Id VEB14-00098 **Open Date** 10-APR-14 **Close Date** 10-APR-14

Esignature History

Esig Approval ID	User ID	Esig Date	Approval Level	Comments
2732147	NSTYHL	14-APR-14	SPM	Approve batch.
2731638	CSIMMONS	13-APR-14	ITR	Promoted batch to SPM level.

AMWTP

Advanced Mixed Waste Treatment Project

AMWTP

Non-Conformance Report

Date: 22-Sep-2014

Time: 06:52

*****Batch NCR(s)*****

Batch Type	VEB	Batch ID	VEB14-00098		
Trackwise Number		Status		Opened Date	Closed Date

*****Container NCR(s)*****

Container ID or related Batch ID	Trackwise Number	Status	Opened Date	Closed Date

*****End of Non-Conformance Report*****

AMWTP

Advanced Mixed Waste Treatment Project

AMWTP

Scale Check Event Report

Date: 22-Sep-2014

Time: 06:52

Batch Id	VEB14-00098	Container Id	10516352
Batch Id	VEB14-00098	Container Id	10516360
Batch Id	VEB14-00098	Container Id	10516374
Batch Id	VEB14-00098	Container Id	10516386
Batch Id	VEB14-00098	Container Id	10516391
Batch Id	VEB14-00098	Container Id	10516369
Batch Id	VEB14-00098	Container Id	10516357
Batch Id	VEB14-00098	Container Id	10516388
Batch Id	VEB14-00098	Container Id	10516375
Batch Id	VEB14-00098	Container Id	10516365
Batch Id	VEB14-00098	Container Id	10516356
Batch Id	VEB14-00098	Container Id	10516364
Batch Id	VEB14-00098	Container Id	10516354
Batch Id	VEB14-00098	Container Id	10516353
Batch Id	VEB14-00098	Container Id	10516351
Batch Id	VEB14-00098	Container Id	10516371
Batch Id	VEB14-00098	Container Id	10516368
Batch Id	VEB14-00098	Container Id	10516362
Batch Id	VEB14-00098	Container Id	10516355
Batch Id	VEB14-00098	Container Id	10516376

AMWTP

Advanced Mixed Waste Treatment Project

AMWTP

Batch Report Coversheet

Date: 22-Sep-2014

Time: 08:02

Batch Type VE Boxline

Batch Report No. VEB14-00099

Batch Id VEB14-00099

Open Date 10-APR-14 15:33:29

Close Date 11-APR-14 00:43:04

Batch Status AP

Test Facility Idaho AMWTP

Equipment Id VE BiD RPCK VE Box Repackaging Into Drums

Container Id	IDC	Analysis Id	Date Examined	QC Type	Analysis Status	Operator
10516389	BN-508	0000316530	10-APR-14 15:33:29	Original	P	VIRGIL B WATERS
10516366	BN-508	0000316531	10-APR-14 15:45:56	Original	P	ANTHONY CAIN
10516385	BN-508	0000316533	10-APR-14 15:43:52	Original	P	VIRGIL B WATERS
10516380	BN-508	0000316534	10-APR-14 16:00:10	Original	P	VIRGIL B WATERS
10516381	BN-508	0000316535	10-APR-14 16:11:57	Original	P	ANTHONY CAIN
10516393	BN-508	0000316536	10-APR-14 16:08:52	Original	P	VIRGIL B WATERS
10516377	BN-508	0000316537	10-APR-14 16:16:56	Original	P	VIRGIL B WATERS
10516363	BN-508	0000316538	10-APR-14 16:35:38	Original	P	ANTHONY CAIN
10516347	BN-508	0000316539	10-APR-14 16:27:36	Original	P	VIRGIL B WATERS
10516325	BN-508	0000316542	10-APR-14 16:35:15	Original	P	VIRGIL B WATERS
10516370	BN-508	0000316543	10-APR-14 17:47:39	Original	P	ANTHONY CAIN
10516384	BN-508	0000316545	10-APR-14 20:07:56	Original	P	JOHN CUNNINGHAM
10516317	BN-508	0000316549	10-APR-14 20:46:16	Original	P	SHANE HIGH
10516315	BN-508	0000316550	10-APR-14 20:57:23	Original	P	SHANE HIGH
10516278	BN-508	0000316551	10-APR-14 22:08:29	Original	P	SHANE HIGH
10516350	BN-508	0000316552	10-APR-14 23:56:17	Original	P	SHANE HIGH
10516326	BN-508	0000316553	11-APR-14 00:11:00	Original	P	SHANE HIGH
10516358	BN-508	0000316554	11-APR-14 00:20:56	Original	P	JOHN CUNNINGHAM
10516280	BN-508	0000316555	11-APR-14 00:29:57	Original	P	SHANE HIGH
10516283	BN-508	0000316556	11-APR-14 00:42:04	Original	P	SHANE HIGH

**********Batch Comments**********

Written By	Date	Comment
KHUGHES	17-MAY-14 07:05:26	ITR validation
KHUGHES	17-MAY-14 08:46:39	Container 10516380, please review Sharp Objects fields and rework as necessary.
KHUGHES	17-MAY-14 08:51:14	return for rework
VWATERS	17-MAY-14 20:51:26	Esigned.
KHUGHES	20-MAY-14 06:49:01	rework complete and sat.
KHUGHES	20-MAY-14 06:49:50	promote to SPM
RWALKER	21-MAY-14 15:36:40	SPM validation complete. Promote batch.

AMWTP
Advanced Mixed Waste Treatment Project

AMWTP

Batch Report Coversheet

Date: 22-Sep-2014

Time: 08:02

**********Batch E-Signature History**********

Approval ID	User ID	Signature Date	Comment
2757642	KHUGHES	17-MAY-2014 08:51:15	return for rework
2757915	VWATERS	17-MAY-2014 20:51:26	
2759033	KHUGHES	20-MAY-2014 06:49:50	promote to SPM
2760007	RWALKER	21-MAY-2014 15:36:41	SPM validation complete. Promote batch.

***** End of Batch Report Coversheet Report *****

AMWTP
Advanced Mixed Waste Treatment Project

AMWTP

Checklist Report

Date: 22-Sep-2014

Time: 08:03

Batch Id VEB14-00099 **Open Date** 10-APR-14 **Close Date** 11-APR-14

Reviewer KRISANN HUGHES **Approval Level** Independent Technical Reviewer

Approval Date 17-MAY-14 **Review Iteration** 1

Question Text	Answer	Requirement	Comment
1. Is the QA documentation for the Batch Data Reports complete and includes data reports and QC results? o VE Batch Coversheet o Table of Contents (manual review only) o VE Analysis Reports o Analytical Balance Calibration Check Sheet (Form-1215), if applicable (manual review only) o ITR Checklist (Form-1415, manual review only) o Batch Data Report Supplemental Comment Form (Form-1491, manual review only) o Associated NCRs (referenced in WTS) o Audio/Video Recording References, if applicable	Yes		
2. Are there 20 containers or less in the batch?	Yes		
3. Was each VE Operator qualified at the time of the VE event?	Yes		
4. Was a VE data form completed for each container in the batch?	Yes		
Was the data generated in a technically correct manner using the correct revision of INST-OI-34, Non-facility Visual Examination or INST-FOI-17, Facility Visual Examination Operations, as applicable.	Yes		
6. Was the correct revision of the procedure documented on each analysis report?	Yes		
7. Was the E-signature History review performed?	Yes		
8. Was guidance from VEE documented, as applicable?	N/A		
9. Does every drum reported in the batch have a valid audio/video recording (as applicable)?	N/A		
10. Does the physical form match the waste stream description, waste matrix code and IDC?	Yes		
11. Did the VE event result in an IDC/Waste Matrix Code change? If so, was an NCR initiated?	No		
12. Were the waste material parameters documented correctly?	Yes		
13. Was the presence or absence of prohibited items properly identified? o If prohibited items were identified, were NCRs initiated?	Yes		
14. Has the description of rigid liners and layers of confinement been properly documented?	Yes		
15. Was the drum age criteria (DAC) entered correctly and completely? o Closure Method(s) o Liner Puncture Status o Layers of Confinement o Closure Date o Packaging Configuration o Type and number of filters, as applicable o Liner hole presence and diameter, as applicable	Yes		
16. Have filters been installed or removed from drum as recorded in WTS, as applicable?	N/A		
17. Hand calculations and unit conversions are correct? o Does the packaging weight plus the net weight equal the gross weight of the drum in the estimated waste material parameters, and for the unit conversions that are entered by volume or weight?	Yes		
18. Were all units and significant figures used correct for all reported volumes/weights?	Yes		

Batch Id VEB14-00099 **Open Date** 10-APR-14 **Close Date** 11-APR-14

Reviewer KRISANN HUGHES **Approval Level** Independent Technical Reviewer
Approval Date 17-MAY-14 **Review Iteration** 1

Question Text	Answer	Requirement	Comment
19. Has the data been reviewed for transcription errors as appropriate?	Yes		
20. Were the Visual Examination QAOs met? o Precision o Accuracy o Completeness o Comparability	Yes		
21. Is each data form signed by qualified VE Operators, as applicable per the appropriate procedure being used?	Yes		
22. Was the audio/video check satisfactory, as applicable?	N/A		
23. Was the scale or balance check weight event satisfactory, as applicable?	N/A		
24. Are the QC weight checks within the tolerance of the scale or balance, as applicable?	N/A		
25. Were any NCRs generated for drums containing prohibited items or any nonconforming conditions that failed to meet DQOs or QAOs? o Include the NCRs as appropriate, in the Batch Data Report.	No		
26. Were the rework requirements clearly identified in WTS or on the BDR?	Yes		

Batch Id VEB14-00099 **Open Date** 10-APR-14 **Close Date** 11-APR-14

Reviewer KRISANN HUGHES **Approval Level** Independent Technical Reviewer

Approval Date 20-MAY-14 **Review Iteration** 2

Question Text	Answer	Requirement	Comment
1. Is the QA documentation for the Batch Data Reports complete and includes data reports and QC results? o VE Batch Coversheet o Table of Contents (manual review only) o VE Analysis Reports o Analytical Balance Calibration Check Sheet (Form-1215), if applicable (manual review only) o ITR Checklist (Form-1415, manual review only) o Batch Data Report Supplemental Comment Form (Form-1491, manual review only) o Associated NCRs (referenced in WTS) o Audio/Video Recording References, if applicable	Yes		
2. Are there 20 containers or less in the batch?	Yes		
3. Was each VE Operator qualified at the time of the VE event?	Yes		
4. Was a VE data form completed for each container in the batch?	Yes		
Was the data generated in a technically correct manner using the correct revision of INST-OI-34, Non-facility Visual Examination or INST-FOI-17, Facility Visual Examination Operations, as applicable.	Yes		
6. Was the correct revision of the procedure documented on each analysis report?	Yes		
7. Was the E-signature History review performed?	Yes		
8. Was guidance from VEE documented, as applicable?	N/A		
9. Does every drum reported in the batch have a valid audio/video recording (as applicable)?	N/A		
10. Does the physical form match the waste stream description, waste matrix code and IDC?	Yes		
11. Did the VE event result in an IDC/Waste Matrix Code change? If so, was an NCR initiated?	No		
12. Were the waste material parameters documented correctly?	Yes		
13. Was the presence or absence of prohibited items properly identified? o If prohibited items were identified, were NCRs initiated?	Yes		
14. Has the description of rigid liners and layers of confinement been properly documented?	Yes		
15. Was the drum age criteria (DAC) entered correctly and completely? o Closure Method(s) o Liner Puncture Status o Layers of Confinement o Closure Date o Packaging Configuration o Type and number of filters, as applicable o Liner hole presence and diameter, as applicable	Yes		
16. Have filters been installed or removed from drum as recorded in WTS, as applicable?	N/A		
17. Hand calculations and unit conversions are correct? o Does the packaging weight plus the net weight equal the gross weight of the drum in the estimated waste material parameters, and for the unit conversions that are entered by volume or weight?	Yes		
18. Were all units and significant figures used correct for all reported volumes/weights?	Yes		

Batch Id VEB14-00099 **Open Date** 10-APR-14 **Close Date** 11-APR-14

Reviewer KRISANN HUGHES **Approval Level** Independent Technical Reviewer
Approval Date 20-MAY-14 **Review Iteration** 2

Question Text	Answer	Requirement	Comment
19. Has the data been reviewed for transcription errors as appropriate?	Yes		
20. Were the Visual Examination QAOs met? o Precision o Accuracy o Completeness o Comparability	Yes		
21. Is each data form signed by qualified VE Operators, as applicable per the appropriate procedure being used?	Yes		
22. Was the audio/video check satisfactory, as applicable?	N/A		
23. Was the scale or balance check weight event satisfactory, as applicable?	N/A		
24. Are the QC weight checks within the tolerance of the scale or balance, as applicable?	N/A		
25. Were any NCRs generated for drums containing prohibited items or any nonconforming conditions that failed to meet DQOs or QAOs? o Include the NCRs as appropriate, in the Batch Data Report.	No		
26. Were the rework requirements clearly identified in WTS or on the BDR?	Yes		

Batch Id VEB14-00099 **Open Date** 10-APR-14 **Close Date** 11-APR-14

Reviewer REED WALKER **Approval Level** SPM Data Validation

Approval Date 21-MAY-14 **Review Iteration** 1

Question Text	Answer	Requirement	Comment
(1) Has the batch received a Data Generation Level Independent Technical Review?	Yes	MP-TRUW-8.2, C3-10b(1)	
(2) Are the batch data review checklists complete?	Yes	MP-TRUW-8.2, C3-10b(1)	
(3) When identified, were PCBs, mercury, lead, or other hazardous contaminants consistent with the waste stream AK Summary Report(s) and/or AK documentation?	N/A	MP-TRUW-8.2, C4-3	None were identified.
(4) Are any ignitable, corrosive, or reactive wastes identified?	No	MP-TRUW-8.2, C4-3	
(5) Are the packaging configurations identified on the VE consistent with the waste stream AK Summary Report(s) and/or AK documentation?	Yes	MP-TRUW-8.2, C4-3	
(6) Do the drums in this batch contain typical waste items consistent with waste stream AK Summary Report(s) and/or AK documentation?	Yes	MP-TRUW-8.2, C4-3	
(7) Are the Waste Matrix Codes and physical form descriptions consistent with AK?	Yes	MP-TRUW-8.2, C4-3	
(8) Have all AK discrepancies been resolved and have all AK Resolution checklists been approved? Reference all waste stream AK documentation used in review of this data package.	N/A	MP-TRUW-8.2, C4-3	No discrepancies identified.
(9) Does the batch report identify the correct implementing procedure number and revision number used for this testing method?	Yes	MP-TRUW-8.2, C3-4 and Table C3-11	
(10) Have the Waste Matrix Code (WMC) and IDC for all drums in the batch remained the same as originally assigned by the historical designation? NOTE: If not, note the drum number in the comment field and notify the Acceptable Knowledge Expert (AKE) if an NCR does not exist for the WMC and IDC change.	Yes	MP-TRUW-8.2, C-3c and C1-4	
(11) Does the physical form of the waste match the WMC, waste stream description, and identify the absence of prohibited items?	Yes	MP-TRUW-8.2, C-3c and C1-4	
(12) If observable liquids exist in the drum, is an estimate of quantity given?	N/A	MP-TRUW-8.2, C-3c and C1-4	No liquids identified.
(13) Precision: Have all discrepancies been reconciled between the operator and the ITR with regard to identification of WMC, liquids in excess of TSDF-WAC limits, and compressed gases?	Yes	MP-TRUW-8.2 C3-4b	
(14) Accuracy: Have all operators passed a comprehensive examination and demonstrated satisfactory performance in the presence of the VE expert during initial and subsequent qualifications?	Yes	MP-TRUW-8.2 C3-4b	
(15) Completeness: Has a validated VE data form been obtained for 100% of the waste containers subject to VE?	Yes	MP-TRUW-8.2 C3-4b	
(16) Comparability: Has the comparability of VE data from different operators been enhanced by use of standardized VE procedures and operator qualifications?	Yes	MP-TRUW-8.2 C3-4b	
(17) Does the data for all containers within this batch meet the review, validation, and verification requirements? · Are proper units (e.g. Liters or pounds) and significant figure used? · Is the BDR complete (all pages identified in the BDR and numbered according)? - VE Batch Coversheet - Table of Contents (manual review only) - VE Analysis Reports - Analytical Balance Calibration Checklist (if applicable) - ITR Checklist (Form-1415)	Yes	MP-TRUW-8.2, C3-10b and Table C3-11	

Batch Id VEB14-00099 **Open Date** 10-APR-14 **Close Date** 11-APR-14

Reviewer REED WALKER **Approval Level** SPM Data Validation

Approval Date 21-MAY-14 **Review Iteration** 1

Question Text	Answer	Requirement	Comment
- Associated NCRs - Audio/Video Recordings (if applicable)			
(18) Do the drum reports contain the (a) Batch Data Report number and date, (b) waste container number (c)WMC, (d) implementing procedure and revision, (e) audio/video recording reference, (f) audio and video QC checks were performed and satisfactory, (g) verification that the physical form matches the waste stream description and WMC, (h) absence of prohibited items, (i) gross container weight, (j) waste material parameter weights, and (k) signature and date of examination (signatures of both operators when applicable)?	Yes	MP-TRUW-8.2, C1-4 and Table C3-11	
(19) Is the description of container contents detailed enough to provide verification of estimated weights for the waste matrix parameters identified?	Yes	MP-TRUW-8.2, C1-4 and Table C3-11	
(20) Is there a valid second weight check for every 10 items?	N/A	MP-TRUW-8.2, C1-4	Not required for this batch.
(21) Verification of two operator signatures when doing VE?	Yes	MP-TRUW-8.2, C-3d(1) and Table C3-11	
(22) Are there 20 or fewer containers in the batch?	Yes	MP-TRUW-8.2, C1-3 and C3-10	
(23) Review all NCRs (open and closed). Can the batch be approved?	Yes	MP-TRUW-8.2, C3-13	No NCRs.
(24) All data associated with this BDR is acceptable for signature release?	Yes	MP-TRUW-8.2, C3-10b and C3-10b(1)	

Batch Id VEB14-00099 **Open Date** 10-APR-14 **Close Date** 11-APR-14

Esignature History

Esig Approval ID	User ID	Esig Date	Approval Level	Comments
2760007	RWALKER	21-MAY-14	SPM	SPM validation complete. Promote batch.
2759033	KHUGHES	20-MAY-14	ITR	promote to SPM
2757642	KHUGHES	17-MAY-14	ITR	return for rework

AMWTP
Advanced Mixed Waste Treatment Project

AMWTP

VE Boxline and Repackaging Report

Date: 22-Sep-2014

Time: 08:04

Batch Id VEB14-00099 **Container Id** 10516389 **Analysis Id** 0000316530

VE Date 10-APR-14 15:33:29 **Analysis Status** Pass

Gen-IDC Code BN-508 AMWTP Newly Generated Debris **VE Weight** 149.94 lbs.

Closure Date 10-APR-14 15:33:29 **Procedure Id** INST-FOI-17 **Net Weight** 123.94 lbs.

Container Type 55 **Revision** 27

Operator 1 VIRGIL B WATERS **Waste Matrix** S5490 **Summary Category Group** S5000

Operator 2 MICHAEL BECK **Equipment ID** VE BiD RPCK

General

Rigid Liner Present? No **Liner Type** NO LINER **Closure Method** No Bags

Liner Punctured? Yes **Layers Of Confinement** 0 **Fill Factor** 65 % **Liner Lid Present** No

Liquids

Liquids Present? No **Comment**

Liquid Between Liner and Drum 0 pints **Other Liquids** 0 pints

Containerized Liquid pints **Total Liquid Amount** 0 pints

Internal Container with Liquid 0 pints

Internal Container with Liquid No

Prohibited Liquids Present No

Containerized Liquid

Contents

Sharp Objects? No **Are Sharp Objects Protected?** Yes

	Value	*Comment*
Prohibited Compressed Gas Present?	No	
Explosives Present?	No	
Pyrophorics Present?	No	
Mercury Present?	No	
PCBs Present?	No	
PCB Mass (lbs)	0	
Wet Cell Batteries Present?	No	
Corrosives,Ignitables or Reactives Present?	No	
Beryllium Contaminates Present?	No	
Hazardous-Only Waste Present?	No	
Is Waste Incompatible with backfill, packaging materials, or shipping container materials?	No	
Sealed Containers Over 4L?	No	

IDC Verification

Is IDC correct? Yes **Recommended IDC** -

IDC Change Reason

Visual Exam Comment Remaining waste by weight percent is plastic consisting of PPE, bags, hose, sheeting and tape.

Batch Id VEB14-00099 **Container Id** 10516389 **Analysis Id** 0000316530

Source Container

Is there a source container? Yes

Source Container ID	Location	IDC
10508936	destroyed @ 676-BXI/15	RF-760

IDC CODES

Current Container IDC Code: BN-508 **Recommended IDC Code:** -

Waste Material Items

Packaging Materials

Material Item	Quantity	Unit	Unit Wt	Item Wt(lbs)

Waste Items by Weight

Material Item	Quantity	Unit	Unit Wt	Item Wt(lbs)

Waste Items by Volume

Material Item	Quantity	Unit	Unit Wt	Item Wt(lbs)

Waste Parameters

Waste Parameter	Remaining Weight %	Actual Weight Lbs
Iron-based Metals/Alloys	0.000	0.000
Aluminum-based Metals/Alloys	0.000	0.000
Other metals	0.000	0.000
Other Inorganic Materials	0.000	0.000
Cellulosics	0.000	0.000
Rubber	0.000	0.000
Plastic (Waste Materials)	100.000	123.940
Inorganic matrix	0.000	0.000
Organic matrix	0.000	0.000
Soils/gravel	0.000	0.000
Steel (packaging materials)	0.000	26.000
Plastic (packaging materials)	0.000	0.000
Cellulosics Packaging	0.000	0.000
MLLW Waste	0.000	0.000

Esignature History

Esig Approval Id	User Id	E-signature Date	Comment
2730342	VWATERS	10-APR-14 15:33:30	
2730343	MBECK1	10-APR-14 15:33:33	

Batch Id VEB14-00099 **Container Id** 10516366 **Analysis Id** 0000316531

VE Date 10-APR-14 15:45:56 **Analysis Status** Pass

Gen-IDC Code BN-508 AMWTP Newly Generated Debris **VE Weight** 169.79 lbs.

Closure Date 10-APR-14 15:45:56 **Procedure Id** INST-FOI-17 **Net Weight** 143.79 lbs.

Container Type 55 **Revision** 27

Operator 1 ANTHONY CAIN **Waste Matrix** S5490 **Summary Category Group** S5000

Operator 2 KEN DOWNS **Equipment ID** VE BiD RPCK

General

Rigid Liner Present? No **Liner Type** NO LINER **Closure Method** No Bags

Liner Punctured? Yes **Layers Of Confinement** 0 **Fill Factor** 67 % **Liner Lid Present** No

Liquids

Liquids Present? No **Comment**

Liquid Between Liner and Drum 0 pints **Other Liquids** 0 pints

Containerized Liquid pints **Total Liquid Amount** 0 pints

Internal Container with Liquid 0 pints

Internal Container with Liquid No

Prohibited Liquids Present No

Containerized Liquid

Contents

Sharp Objects? Yes **Are Sharp Objects Protected?** No

	Value	*Comment*
Prohibited Compressed Gas Present?	No	
Explosives Present?	No	
Pyrophorics Present?	No	
Mercury Present?	No	
PCBs Present?	No	
PCB Mass (lbs)	0	
Wet Cell Batteries Present?	No	
Corrosives,Ignitables or Reactives Present?	No	
Beryllium Contaminates Present?	No	
Hazardous-Only Waste Present?	No	
Is Waste Incompatible with backfill, packaging materials, or shipping container materials?	No	
Sealed Containers Over 4L?	No	

IDC Verification

Is IDC correct? Yes **Recommended IDC** -

IDC Change Reason

Visual Exam Comment Remaining waste by weight percent is Iron based Metals/Alloys consisting of misc. scrap metal.

VE Boxline and Repackaging Report

Batch Id VEB14-00099 **Container Id** 10516366 **Analysis Id** 0000316531

Source Container

Is there a source container? Yes

Source Container ID	Location	IDC
10291964	destroyed @ 676- BXI/16	SD-177

IDC CODES

Current Container IDC Code: BN-508 **Recommended IDC Code:** -

Waste Material Items

Packaging Materials

Material Item	Quantity	Unit	Unit Wt	Item Wt(lbs)

Waste Items by Weight

Material Item	Quantity	Unit	Unit Wt	Item Wt(lbs)

Waste Items by Volume

Material Item	Quantity	Unit	Unit Wt	Item Wt(lbs)
Rubber	3.000	PINTS	1.554	4.660
Plastic	15.000	PINTS	0.937	14.060

Waste Parameters

Waste Parameter	Remaining Weight %	Actual Weight Lbs
Iron-based Metals/Alloys	100.000	125.065
Aluminum-based Metals/Alloys	0.000	0.000
Other metals	0.000	0.000
Other Inorganic Materials	0.000	0.000
Cellulosics	0.000	0.000
Rubber	0.000	4.660
Plastic (Waste Materials)	0.000	14.060
Inorganic matrix	0.000	0.000
Organic matrix	0.000	0.000
Soils/gravel	0.000	0.000
Steel (packaging materials)	0.000	26.000
Plastic (packaging materials)	0.000	0.000
Cellulosics Packaging	0.000	0.000
MLLW Waste	0.000	0.000

Esignature History

Esig Approval Id	User Id	E-signature Date	Comment
2730370	TCAIN	10-APR-14 15:45:57	
2730372	KDOWNS	10-APR-14 15:46:04	

AMWTP
Advanced Mixed Waste Treatment Project

AMWTP

VE Boxline and Repackaging Report

Date: 22-Sep-2014

Time: 08:04

Batch Id VEB14-00099 **Container Id** 10516385 **Analysis Id** 0000316533

VE Date 10-APR-14 15:43:52 **Analysis Status** Pass

Gen-IDC Code BN-508 AMWTP Newly Generated Debris **VE Weight** 70.56 lbs.

Closure Date 10-APR-14 15:43:52 **Procedure Id** INST-FOI-17 **Net Weight** 44.56 lbs.

Container Type 55 **Revision** 27

Operator 1 VIRGIL B WATERS **Waste Matrix** S5490 **Summary Category Group** S5000

Operator 2 MICHAEL BECK **Equipment ID** VE BiD RPCK

General

Rigid Liner Present? No **Liner Type** NO LINER **Closure Method** No Bags

Liner Punctured? Yes **Layers Of Confinement** 0 **Fill Factor** 60 % **Liner Lid Present** No

Liquids

Liquids Present? No **Comment**

Liquid Between Liner and Drum 0 pints **Other Liquids** 0 pints

Containerized Liquid pints **Total Liquid Amount** 0 pints

Internal Container with Liquid 0 pints

Internal Container with Liquid No

Prohibited Liquids Present No

Containerized Liquid

Contents

Sharp Objects? No **Are Sharp Objects Protected?** Yes

	Value	*Comment*
Prohibited Compressed Gas Present?	No	
Explosives Present?	No	
Pyrophorics Present?	No	
Mercury Present?	No	
PCBs Present?	No	
PCB Mass (lbs)	0	
Wet Cell Batteries Present?	No	
Corrosives,Ignitables or Reactives Present?	No	
Beryllium Contaminates Present?	No	
Hazardous-Only Waste Present?	No	
Is Waste Incompatible with backfill, packaging materials, or shipping container materials?	No	
Sealed Containers Over 4L?	No	

IDC Verification

Is IDC correct? Yes **Recommended IDC** -

IDC Change Reason

Visual Exam Comment Remaining waste by weight percent is plastic consisting of PPE, bags, hose,sheeting and tape.

Batch Id VEB14-00099 Container Id 10516385 Analysis Id 0000316533

Source Container

Is there a source container? Yes

Source Container ID	Location	IDC
10508936	destroyed @ 676- BXI/15	RF-760

IDC CODES

Current Container IDC Code: BN-508 Recommended IDC Code: -

Waste Material Items

Packaging Materials

Material Item	Quantity	Unit	Unit Wt	Item Wt(lbs)

Waste Items by Weight

Material Item	Quantity	Unit	Unit Wt	Item Wt(lbs)

Waste Items by Volume

Material Item	Quantity	Unit	Unit Wt	Item Wt(lbs)

Waste Parameters

Waste Parameter	Remaining Weight %	Actual Weight Lbs
Iron-based Metals/Alloys	0.000	0.000
Aluminum-based Metals/Alloys	0.000	0.000
Other metals	0.000	0.000
Other Inorganic Materials	0.000	0.000
Cellulosics	0.000	0.000
Rubber	0.000	0.000
Plastic (Waste Materials)	100.000	44.560
Inorganic matrix	0.000	0.000
Organic matrix	0.000	0.000
Soils/gravel	0.000	0.000
Steel (packaging materials)	0.000	26.000
Plastic (packaging materials)	0.000	0.000
Cellulosics Packaging	0.000	0.000
MLLW Waste	0.000	0.000

Esignature History

Esig Approval Id	User Id	E-signature Date	Comment
2730364	VWATERS	10-APR-14 15:43:53	
2730365	MBECKI	10-APR-14 15:43:56	

AMWTP
Advanced Mixed Waste Treatment Project

AMWTP

VE Boxline and Repackaging Report

Date: 22-Sep-2014

Time: 08:04

Batch Id VEB14-00099 **Container Id** 10516380 **Analysis Id** 0000316534

VE Date 10-APR-14 16:00:10 **Analysis Status** Pass

Gen-IDC Code BN-508 AMWTP Newly Generated Debris **VE Weight** 77.18 lbs.

Closure Date 10-APR-14 16:00:10 **Procedure Id** INST-FOI-17 **Net Weight** 51.18 lbs.

Container Type 55 **Revision** 27

Operator 1 VIRGIL B WATERS **Waste Matrix** S5490 **Summary Category Group** S5000

Operator 2 MICHAEL BECK **Equipment ID** VE BiD RPCK

General

Rigid Liner Present? No **Liner Type** NO LINER **Closure Method** No Bags

Liner Punctured? Yes **Layers Of Confinement** 0 **Fill Factor** 60 % **Liner Lid Present** No

Liquids

Liquids Present? No **Comment**

Liquid Between Liner and Drum 0 pints

Containerized Liquid pints

Internal Container with Liquid 0 pints

Other Liquids 0 pints

Total Liquid Amount 0 pints

Internal Container with Liquid No

Prohibited Liquids Present No

Containerized Liquid

Contents

Sharp Objects? No **Are Sharp Objects Protected?** Yes

	Value	*Comment*
Prohibited Compressed Gas Present?	No	
Explosives Present?	No	
Pyrophorics Present?	No	
Mercury Present?	No	
PCBs Present?	No	
PCB Mass (lbs)	0	
Wet Cell Batteries Present?	No	
Corrosives,Ignitables or Reactives Present?	No	
Beryllium Contaminates Present?	No	
Hazardous-Only Waste Present?	No	
Is Waste Incompatible with backfill, packaging materials, or shipping container materials?	No	
Sealed Containers Over 4L?	No	

IDC Verification

Is IDC correct? Yes **Recommended IDC** -

IDC Change Reason

Visual Exam Comment Remaining waste by weight percent is plastic consisting of PPE, bags, hose,sheeting and tape. Changed sharps from no are protected to sharps yes are protected. VBW 05/17/14.

Batch Id VEB14-00099 **Container Id** 10516380 **Analysis Id** 0000316534

Source Container

Is there a source container? Yes

Source Container ID	Location	IDC
10508936	destroyed @ 676- BXI/15	RF-760

IDC CODES

Current Container IDC Code: BN-508 **Recommended IDC Code:** -

Waste Material Items

Packaging Materials

Material Item	Quantity	Unit	Unit Wt	Item Wt(lbs)

Waste Items by Weight

Material Item	Quantity	Unit	Unit Wt	Item Wt(lbs)

Waste Items by Volume

Material Item	Quantity	Unit	Unit Wt	Item Wt(lbs)

Waste Parameters

Waste Parameter	Remaining Weight %	Actual Weight Lbs
Iron-based Metals/Alloys	0.000	0.000
Aluminum-based Metals/Alloys	0.000	0.000
Other metals	0.000	0.000
Other Inorganic Materials	0.000	0.000
Cellulosics	0.000	0.000
Rubber	0.000	0.000
Plastic (Waste Materials)	100.000	51.175
Inorganic matrix	0.000	0.000
Organic matrix	0.000	0.000
Soils/gravel	0.000	0.000
Steel (packaging materials)	0.000	26.000
Plastic (packaging materials)	0.000	0.000
Cellulosics Packaging	0.000	0.000
MLLW Waste	0.000	0.000

Esignature History

Esig Approval Id	User Id	E-signature Date	Comment
2730393	VWATERS	10-APR-14 16:00:11	
2730394	MBECK1	10-APR-14 16:00:14	
2757913	VWATERS	17-MAY-14 20:50:49	Changed sharps from no are protected to sharps yes are protected. VBW 05/17/14.
2757914	MBECK1	17-MAY-14 20:50:57	Changed sharps from no are protected to sharps yes are protected. VBW 05/17/14.

AMWTP
Advanced Mixed Waste Treatment Project

AMWTP

VE Boxline and Repackaging Report

Date: 22-Sep-2014

Time: 08:04

Batch Id VEB14-00099 **Container Id** 10516381 **Analysis Id** 0000316535

VE Date 10-APR-14 16:11:57 **Analysis Status** Pass

Gen-IDC Code BN-508 AMWTP Newly Generated Debris **VE Weight** 156.56 lbs.

Closure Date 10-APR-14 16:11:57 **Procedure Id** INST-FOI-17 **Net Weight** 130.56 lbs.

Container Type 55 **Revision** 27

Operator 1 ANTHONY CAIN **Waste Matrix** S5490 **Summary Category Group** S5000

Operator 2 KEN DOWNS **Equipment ID** VE BiD RPCK

General

Rigid Liner Present? No **Liner Type** NO LINER **Closure Method** No Bags

Liner Punctured? Yes **Layers Of Confinement** 0 **Fill Factor** 65 % **Liner Lid Present** No

Liquids

Liquids Present? No **Comment**

Liquid Between Liner and Drum 0 pints **Other Liquids** 0 pints

Containerized Liquid pints **Total Liquid Amount** 0 pints

Internal Container with Liquid 0 pints

Internal Container with Liquid No

Prohibited Liquids Present No

Containerized Liquid

Contents

Sharp Objects? Yes **Are Sharp Objects Protected?** No

	Value	*Comment*
Prohibited Compressed Gas Present?	No	
Explosives Present?	No	
Pyrophorics Present?	No	
Mercury Present?	No	
PCBs Present?	No	
PCB Mass (lbs)	0	
Wet Cell Batteries Present?	No	
Corrosives,Ignitables or Reactives Present?	No	
Beryllium Contaminates Present?	No	
Hazardous-Only Waste Present?	No	
Is Waste Incompatible with backfill, packaging materials, or shipping container materials?	No	
Sealed Containers Over 4L?	No	

IDC Verification

Is IDC correct? Yes **Recommended IDC** -

IDC Change Reason

Visual Exam Comment Remaining waste by weight percent is Iron based Metals/Alloys consisting of misc. scrap metal.

VE Boxline and Repackaging Report

Batch Id VEB14-00099 **Container Id** 10516381 **Analysis Id** 0000316535

Source Container

Is there a source container? Yes

Source Container ID	Location	IDC
10291964	destroyed @ 676- BXI/16	SD-177

IDC CODES

Current Container IDC Code: BN-508 **Recommended IDC Code:** -

Waste Material Items

Packaging Materials

Material Item	Quantity	Unit	Unit Wt	Item Wt(lbs)

Waste Items by Weight

Material Item	Quantity	Unit	Unit Wt	Item Wt(lbs)

Waste Items by Volume

Material Item	Quantity	Unit	Unit Wt	Item Wt(lbs)
Paper	6.000	PINTS	0.969	5.810
Rubber	3.000	PINTS	1.554	4.660
Plastic	11.000	PINTS	0.937	10.310

Waste Parameters

Waste Parameter	Remaining Weight %	Actual Weight Lbs
Iron-based Metals/Alloys	100.000	109.775
Aluminum-based Metals/Alloys	0.000	0.000
Other metals	0.000	0.000
Other Inorganic Materials	0.000	0.000
Cellulosics	0.000	5.810
Rubber	0.000	4.660
Plastic (Waste Materials)	0.000	10.310
Inorganic matrix	0.000	0.000
Organic matrix	0.000	0.000
Soils/gravel	0.000	0.000
Steel (packaging materials)	0.000	26.000
Plastic (packaging materials)	0.000	0.000
Cellulosics Packaging	0.000	0.000
MLLW Waste	0.000	0.000

Esignature History

Esig Approval Id	User Id	E-signature Date	Comment
2730483	TCAIN	10-APR-14 16:11:58	
2730485	KDOWNS	10-APR-14 16:12:01	

AMWTP

Advanced Mixed Waste Treatment Project

AMWTP

VE Boxline and Repackaging Report

Date: 22-Sep-2014

Time: 08:04

Batch Id VEB14-00099 **Container Id** 10516393 **Analysis Id** 0000316536

VE Date 10-APR-14 16:08:52 **Analysis Status** Pass

Gen-IDC Code BN-508 AMWTP Newly Generated Debris **VE Weight** 110.25 lbs.

Closure Date 10-APR-14 16:08:52 **Procedure Id** INST-FOI-17 **Net Weight** 84.25 lbs.

Container Type 55 **Revision** 27

Operator 1 VIRGIL B WATERS **Waste Matrix** S5490 **Summary Category Group** S5000

Operator 2 MICHAEL BECK **Equipment ID** VE BiD RPCK

General

Rigid Liner Present? No **Liner Type** NO LINER **Closure Method** No Bags

Liner Punctured? Yes **Layers Of Confinement** 0 **Fill Factor** 65 % **Liner Lid Present** No

Liquids

Liquids Present? No **Comment**

Liquid Between Liner and Drum 0 pints **Other Liquids** 0 pints

Containerized Liquid pints **Total Liquid Amount** 0 pints

Internal Container with Liquid 0 pints

Internal Container with Liquid No

Prohibited Liquids Present No

Containerized Liquid

Contents

Sharp Objects? Yes **Are Sharp Objects Protected?** No

	Value	*Comment*
Prohibited Compressed Gas Present?	No	
Explosives Present?	No	
Pyrophorics Present?	No	
Mercury Present?	No	
PCBs Present?	No	
PCB Mass (lbs)	0	
Wet Cell Batteries Present?	No	
Corrosives,Ignitables or Reactives Present?	No	
Beryllium Contaminates Present?	No	
Hazardous-Only Waste Present?	No	
Is Waste Incompatible with backfill, packaging materials, or shipping container materials?	No	
Sealed Containers Over 4L?	No	

IDC Verification

Is IDC correct? Yes **Recommended IDC** -

IDC Change Reason

Visual Exam Comment Remaining waste by weight percent is plastic consisting of PPE, bags, hose,sheeting and tape.

VE Boxline and Repackaging Report

Batch Id VEB14-00099 **Container Id** 10516393 **Analysis Id** 0000316536

Source Container

Is there a source container? Yes

Source Container ID	Location	IDC
10508936	destroyed @ 676- BXI/15	RF-760

IDC CODES

Current Container IDC Code: BN-508 **Recommended IDC Code:** -

Waste Material Items

Packaging Materials

Material Item	Quantity	Unit	Unit Wt	Item Wt(lbs)

Waste Items by Weight

Material Item	Quantity	Unit	Unit Wt	Item Wt(lbs)

Waste Items by Volume

Material Item	Quantity	Unit	Unit Wt	Item Wt(lbs)
Rubber	0.500	PINTS	1.554	0.780
Aluminum	3.000	PINTS	3.123	9.370

Waste Parameters

Waste Parameter	Remaining Weight %	Actual Weight Lbs
Iron-based Metals/Alloys	0.000	0.000
Aluminum-based Metals/Alloys	0.000	9.370
Other metals	0.000	0.000
Other Inorganic Materials	0.000	0.000
Cellulosics	0.000	0.000
Rubber	0.000	0.780
Plastic (Waste Materials)	100.000	74.100
Inorganic matrix	0.000	0.000
Organic matrix	0.000	0.000
Soils/gravel	0.000	0.000
Steel (packaging materials)	0.000	26.000
Plastic (packaging materials)	0.000	0.000
Cellulosics Packaging	0.000	0.000
MLLW Waste	0.000	0.000

Esignature History

Esig Approval Id	User Id	E-signature Date	Comment
2730439	VWATERS	10-APR-14 16:08:52	
2730440	MBECKI	10-APR-14 16:08:54	

AMWTP
Advanced Mixed Waste Treatment Project

AMWTP

VE Boxline and Repackaging Report

Date: 22-Sep-2014
Time: 08:04

Batch Id VEB14-00099 **Container Id** 10516377 **Analysis Id** 0000316537

VE Date 10-APR-14 16:16:56 **Analysis Status** Pass

Gen-IDC Code BN-508 AMWTP Newly Generated Debris **VE Weight** 191.84 lbs.

Closure Date 10-APR-14 16:16:56 **Procedure Id** INST-FOI-17 **Net Weight** 165.84 lbs.

Container Type 55 **Revision** 27

Operator 1 VIRGIL B WATERS **Waste Matrix** S5490 **Summary Category Group** S5000

Operator 2 MICHAEL BECK **Equipment ID** VE BiD RPCK

General

Rigid Liner Present? No **Liner Type** NO LINER **Closure Method** No Bags

Liner Punctured? Yes **Layers Of Confinement** 0 **Fill Factor** 60 % **Liner Lid Present** No

Liquids

Liquids Present? No **Comment**

Liquid Between Liner and Drum 0 pints **Other Liquids** 0 pints

Containerized Liquid pints **Total Liquid Amount** 0 pints

Internal Container with Liquid 0 pints

Internal Container with Liquid No

Prohibited Liquids Present No

Containerized Liquid

Contents

Sharp Objects? Yes **Are Sharp Objects Protected?** No

	Value	Comment
Prohibited Compressed Gas Present?	No	
Explosives Present?	No	
Pyrophorics Present?	No	
Mercury Present?	No	
PCBs Present?	No	
PCB Mass (lbs)	0	
Wet Cell Batteries Present?	No	
Corrosives,Ignitables or Reactives Present?	No	
Beryllium Contaminates Present?	No	
Hazardous-Only Waste Present?	No	
Is Waste Incompatible with backfill, packaging materials, or shipping container materials?	No	
Sealed Containers Over 4L?	No	

IDC Verification

Is IDC correct? Yes **Recommended IDC** -

IDC Change Reason

Visual Exam Comment Remaining waste by weight percent is iron based metal alloys consisting of misc. scrap metal.

VE Boxline and Repackaging Report

Batch Id VEB14-00099 **Container Id** 10516377 **Analysis Id** 0000316537

Source Container

Is there a source container? Yes

Source Container ID	Location	IDC
10508936	destroyed @ 676- BXI/15	RF-760

IDC CODES

Current Container IDC Code: BN-508 **Recommended IDC Code:** -

Waste Material Items

Packaging Materials

Material Item	Quantity	Unit	Unit Wt	Item Wt(lbs)

Waste Items by Weight

Material Item	Quantity	Unit	Unit Wt	Item Wt(lbs)

Waste Items by Volume

Material Item	Quantity	Unit	Unit Wt	Item Wt(lbs)
Plastic	1.000	PINTS	0.937	0.940

Waste Parameters

Waste Parameter	Remaining Weight %	Actual Weight Lbs
Iron-based Metals/Alloys	100.000	164.895
Aluminum-based Metals/Alloys	0.000	0.000
Other metals	0.000	0.000
Other Inorganic Materials	0.000	0.000
Cellulosics	0.000	0.000
Rubber	0.000	0.000
Plastic (Waste Materials)	0.000	0.940
Inorganic matrix	0.000	0.000
Organic matrix	0.000	0.000
Soils/gravel	0.000	0.000
Steel (packaging materials)	0.000	26.000
Plastic (packaging materials)	0.000	0.000
Cellulosics Packaging	0.000	0.000
MLLW Waste	0.000	0.000

Esignature History

Esig Approval Id	User Id	E-signature Date	Comment
2730526	VWATERS	10-APR-14 16:16:56	
2730563	MBECK1	10-APR-14 16:16:58	

AMWTP
Advanced Mixed Waste Treatment Project

AMWTP

VE Boxline and Repackaging Report

Date: 22-Sep-2014
Time: 08:04

Batch Id VEB14-00099 **Container Id** 10516363 **Analysis Id** 0000316538

VE Date 10-APR-14 16:35:38 **Analysis Status** Pass
Gen-IDC Code BN-508 AMWTP Newly Generated Debris **VE Weight** 147.74 lbs.
Closure Date 10-APR-14 16:35:38 **Procedure Id** INST-FOI-17 **Net Weight** 121.74 lbs.
Container Type 55 **Revision** 27
Operator 1 ANTHONY CAIN **Waste Matrix** S5490 **Summary Category Group** S5000
Operator 2 KEN DOWNS **Equipment ID** VE BiD RPCK

General

Rigid Liner Present? No **Liner Type** NO LINER **Closure Method** No Bags
Liner Punctured? Yes **Layers Of Confinement** 0 **Fill Factor** 68 % **Liner Lid Present** No

Liquids

Liquids Present? No **Comment**

Liquid Between Liner and Drum 0 pints **Other Liquids** 0 pints
Containerized Liquid pints **Total Liquid Amount** 0 pints
Internal Container with Liquid 0 pints

Internal Container with Liquid No

Prohibited Liquids Present No

Containerized Liquid

Contents

Sharp Objects? Yes **Are Sharp Objects Protected?** No

	Value	*Comment*
Prohibited Compressed Gas Present?	No	
Explosives Present?	No	
Pyrophorics Present?	No	
Mercury Present?	No	
PCBs Present?	No	
PCB Mass (lbs)	0	
Wet Cell Batteries Present?	No	
Corrosives,Ignitables or Reactives Present?	No	
Beryllium Contaminates Present?	No	
Hazardous-Only Waste Present?	No	
Is Waste Incompatible with backfill, packaging materials, or shipping container materials?	No	
Sealed Containers Over 4L?	No	

IDC Verification

Is IDC correct? Yes **Recommended IDC** -

IDC Change Reason

Visual Exam Comment Remaining waste by weight percent is Iron based Metals/Alloys consisting of misc. scrap metal.

Batch Id VEB14-00099 Container Id 10516363 Analysis Id 0000316538

Source Container

Is there a source container? Yes

Source Container ID	Location	IDC
10291964	destroyed @ 676- BXI/16	SD-177

IDC CODES

Current Container IDC Code: BN-508 Recommended IDC Code: -

Waste Material Items

Packaging Materials

Material Item	Quantity	Unit	Unit Wt	Item Wt(lbs)

Waste Items by Weight

Material Item	Quantity	Unit	Unit Wt	Item Wt(lbs)

Waste Items by Volume

Material Item	Quantity	Unit	Unit Wt	Item Wt(lbs)
Paper	5.000	PINTS	0.969	4.850
Rubber	2.000	PINTS	1.554	3.110
Plastic	9.000	PINTS	0.937	8.430

Waste Parameters

Waste Parameter	Remaining Weight %	Actual Weight Lbs
Iron-based Metals/Alloys	100.000	105.345
Aluminum-based Metals/Alloys	0.000	0.000
Other metals	0.000	0.000
Other Inorganic Materials	0.000	0.000
Cellulosics	0.000	4.850
Rubber	0.000	3.110
Plastic (Waste Materials)	0.000	8.430
Inorganic matrix	0.000	0.000
Organic matrix	0.000	0.000
Soils/gravel	0.000	0.000
Steel (packaging materials)	0.000	26.000
Plastic (packaging materials)	0.000	0.000
Cellulosics Packaging	0.000	0.000
MLLW Waste	0.000	0.000

Esignature History

Esig Approval Id	User Id	E-signature Date	Comment
2730584	TCAIN	10-APR-14 16:35:38	
2730585	KDOWNS	10-APR-14 16:35:39	

AMWTP

Advanced Mixed Waste Treatment Project

AMWTP

VE Boxline and Repackaging Report

Date: 22-Sep-2014

Time: 08:04

Batch Id VEB14-00099 **Container Id** 10516347 **Analysis Id** 0000316539

VE Date 10-APR-14 16:27:36 **Analysis Status** Pass

Gen-IDC Code BN-508 AMWTP Newly Generated Debris **VE Weight** 372.65 lbs.

Closure Date 10-APR-14 16:27:36 **Procedure Id** INST-FOI-17 **Net Weight** 346.65 lbs.

Container Type 55 **Revision** 27

Operator 1 VIRGIL B WATERS **Waste Matrix** S5490 **Summary Category Group** S5000

Operator 2 MICHAEL BECK **Equipment ID** VE BiD RPCK

General

Rigid Liner Present? No **Liner Type** NO LINER **Closure Method** No Bags

Liner Punctured? Yes **Layers Of Confinement** 0 **Fill Factor** 60 % **Liner Lid Present** No

Liquids

Liquids Present? No **Comment**

Liquid Between Liner and Drum 0 pints **Other Liquids** 0 pints

Containerized Liquid pints **Total Liquid Amount** 0 pints

Internal Container with Liquid 0 pints

Internal Container with Liquid No

Prohibited Liquids Present No

Containerized Liquid

Contents

Sharp Objects? Yes **Are Sharp Objects Protected?** No

	Value	*Comment*
Prohibited Compressed Gas Present?	No	
Explosives Present?	No	
Pyrophorics Present?	No	
Mercury Present?	No	
PCBs Present?	No	
PCB Mass (lbs)	0	
Wet Cell Batteries Present?	No	
Corrosives,Ignitables or Reactives Present?	No	
Beryllium Contaminates Present?	No	
Hazardous-Only Waste Present?	No	
Is Waste Incompatible with backfill, packaging materials, or shipping container materials?	No	
Sealed Containers Over 4L?	No	

IDC Verification

Is IDC correct? Yes **Recommended IDC** -

IDC Change Reason

Visual Exam Comment Remaining waste by weight percent is iron based metal alloys consisting of misc. scrap metal.

VE Boxline and Repackaging Report

Batch Id VEB14-00099 **Container Id** 10516347 **Analysis Id** 0000316539

Source Container

Is there a source container? Yes

Source Container ID	Location	IDC
10508936	destroyed @ 676- BXI/15	RF-760

IDC CODES

Current Container IDC Code: BN-508 **Recommended IDC Code:** -

Waste Material Items

Packaging Materials

Material Item	Quantity	Unit	Unit Wt	Item Wt(lbs)

Waste Items by Weight

Material Item	Quantity	Unit	Unit Wt	Item Wt(lbs)

Waste Items by Volume

Material Item	Quantity	Unit	Unit Wt	Item Wt(lbs)
Plastic	2.000	PINTS	0.937	1.870

Waste Parameters

Waste Parameter	Remaining Weight %	Actual Weight Lbs
Iron-based Metals/Alloys	100.000	344.775
Aluminum-based Metals/Alloys	0.000	0.000
Other metals	0.000	0.000
Other Inorganic Materials	0.000	0.000
Cellulosics	0.000	0.000
Rubber	0.000	0.000
Plastic (Waste Materials)	0.000	1.870
Inorganic matrix	0.000	0.000
Organic matrix	0.000	0.000
Soils/gravel	0.000	0.000
Steel (packaging materials)	0.000	26.000
Plastic (packaging materials)	0.000	0.000
Cellulosics Packaging	0.000	0.000
MLLW Waste	0.000	0.000

Esignature History

Esig Approval Id	User Id	E-signature Date	Comment
2730571	VWATERS	10-APR-14 16:27:37	
2730572	MBECK1	10-APR-14 16:27:40	

Batch Id VEB14-00099 **Container Id** 10516325 **Analysis Id** 0000316542

VE Date 10-APR-14 16:35:15 **Analysis Status** Pass

Gen-IDC Code BN-508 AMWTP Newly Generated Debris **VE Weight** 108.05 lbs.

Closure Date 10-APR-14 16:35:15 **Procedure Id** INST-FOI-17 **Net Weight** 82.05 lbs.

Container Type 55 **Revision** 27

Operator 1 VIRGIL B WATERS **Waste Matrix** S5490 **Summary Category Group** S5000

Operator 2 MICHAEL BECK **Equipment ID** VE BiD RPCK

General

Rigid Liner Present? No **Liner Type** NO LINER **Closure Method** No Bags

Liner Punctured? Yes **Layers Of Confinement** 0 **Fill Factor** 60 % **Liner Lid Present** No

Liquids

Liquids Present? No **Comment**

Liquid Between Liner and Drum 0 pints **Other Liquids** 0 pints

Containerized Liquid pints **Total Liquid Amount** 0 pints

Internal Container with Liquid 0 pints

Internal Container with Liquid No

Prohibited Liquids Present No

Containerized Liquid

Contents

Sharp Objects? Yes **Are Sharp Objects Protected?** No

	Value	*Comment*
Prohibited Compressed Gas Present?	No	
Explosives Present?	No	
Pyrophorics Present?	No	
Mercury Present?	No	
PCBs Present?	No	
PCB Mass (lbs)	0	
Wet Cell Batteries Present?	No	
Corrosives,Ignitables or Reactives Present?	No	
Beryllium Contaminates Present?	No	
Hazardous-Only Waste Present?	No	
Is Waste Incompatible with backfill, packaging materials, or shipping container materials?	No	
Sealed Containers Over 4L?	No	

IDC Verification

Is IDC correct? Yes **Recommended IDC** -

IDC Change Reason

Visual Exam Comment Remaining waste by weight percent is iron based metal alloys consisting of misc. scrap metal.

Batch Id VEB14-00099 **Container Id** 10516325 **Analysis Id** 0000316542

Source Container

Is there a source container? Yes

Source Container ID	Location	IDC
10508936	destroyed @ 676- BXI/15	RF-760

IDC CODES

Current Container IDC Code: BN-508 **Recommended IDC Code:** -

Waste Material Items

Packaging Materials

Material Item	Quantity	Unit	Unit Wt	Item Wt(lbs)

Waste Items by Weight

Material Item	Quantity	Unit	Unit Wt	Item Wt(lbs)

Waste Items by Volume

Material Item	Quantity	Unit	Unit Wt	Item Wt(lbs)
Plastic	5.000	PINTS	0.937	4.690

Waste Parameters

Waste Parameter	Remaining Weight %	Actual Weight Lbs
Iron-based Metals/Alloys	100.000	77.355
Aluminum-based Metals/Alloys	0.000	0.000
Other metals	0.000	0.000
Other Inorganic Materials	0.000	0.000
Cellulosics	0.000	0.000
Rubber	0.000	0.000
Plastic (Waste Materials)	0.000	4.690
Inorganic matrix	0.000	0.000
Organic matrix	0.000	0.000
Soils/gravel	0.000	0.000
Steel (packaging materials)	0.000	26.000
Plastic (packaging materials)	0.000	0.000
Cellulosics Packaging	0.000	0.000
MLLW Waste	0.000	0.000

Esignature History

Esig Approval Id	User Id	E-signature Date	Comment
2730581	VWATERS	10-APR-14 16:35:16	
2730582	MBECK1	10-APR-14 16:35:18	

Batch Id VEB14-00099 **Container Id** 10516370 **Analysis Id** 0000316543

VE Date 10-APR-14 17:47:39 **Analysis Status** Pass

Gen-IDC Code BN-508 AMWTP Newly Generated Debris **VE Weight** 171.99 lbs.

Closure Date 10-APR-14 17:47:39 **Procedure Id** INST-FOI-17 **Net Weight** 145.99 lbs.

Container Type 55 **Revision** 27

Operator 1 ANTHONY CAIN **Waste Matrix** S5490 **Summary Category Group** S5000

Operator 2 KEN DOWNS **Equipment ID** VE BiD RPCK

General

Rigid Liner Present? No **Liner Type** NO LINER **Closure Method** No Bags

Liner Punctured? Yes **Layers Of Confinement** 0 **Fill Factor** 68 % **Liner Lid Present** No

Liquids

Liquids Present? No **Comment**

Liquid Between Liner and Drum 0 pints **Other Liquids** 0 pints

Containerized Liquid pints **Total Liquid Amount** 0 pints

Internal Container with Liquid 0 pints

Internal Container with Liquid No

Prohibited Liquids Present No

Containerized Liquid

Contents

Sharp Objects? Yes **Are Sharp Objects Protected?** No

	Value	*Comment*
Prohibited Compressed Gas Present?	No	
Explosives Present?	No	
Pyrophorics Present?	No	
Mercury Present?	No	
PCBs Present?	No	
PCB Mass (lbs)	0	
Wet Cell Batteries Present?	No	
Corrosives,Ignitables or Reactives Present?	No	
Beryllium Contaminates Present?	No	
Hazardous-Only Waste Present?	No	
Is Waste Incompatible with backfill, packaging materials, or shipping container materials?	No	
Sealed Containers Over 4L?	No	

IDC Verification

Is IDC correct? Yes **Recommended IDC** -

IDC Change Reason

Visual Exam Comment Remaining waste by weight percent is Iron based Metals/Alloys consisting of misc. scrap metal.

VE Boxline and Repackaging Report

Batch Id VEB14-00099 Container Id 10516370 Analysis Id 0000316543

Source Container

Is there a source container? Yes

Source Container ID	Location	IDC
10291964	destroyed @ 676- BXI/16	SD-177

IDC CODES

Current Container IDC Code: BN-508 Recommended IDC Code: -

Waste Material Items

Packaging Materials

Material Item	Quantity	Unit	Unit Wt	Item Wt(lbs)

Waste Items by Weight

Material Item	Quantity	Unit	Unit Wt	Item Wt(lbs)

Waste Items by Volume

Material Item	Quantity	Unit	Unit Wt	Item Wt(lbs)
Paper	5.000	PINTS	0.969	4.850
Rubber	4.000	PINTS	1.554	6.220
Plastic	9.000	PINTS	0.937	8.430

Waste Parameters

Waste Parameter	Remaining Weight %	Actual Weight Lbs
Iron-based Metals/Alloys	100.000	126.490
Aluminum-based Metals/Alloys	0.000	0.000
Other metals	0.000	0.000
Other Inorganic Materials	0.000	0.000
Cellulosics	0.000	4.850
Rubber	0.000	6.220
Plastic (Waste Materials)	0.000	8.430
Inorganic matrix	0.000	0.000
Organic matrix	0.000	0.000
Soils/gravel	0.000	0.000
Steel (packaging materials)	0.000	26.000
Plastic (packaging materials)	0.000	0.000
Cellulosics Packaging	0.000	0.000
MLLW Waste	0.000	0.000

Esignature History

Esig Approval Id	User Id	E-signature Date	Comment
2730630	TCAIN	10-APR-14 17:47:41	
2730631	KDOWNS	10-APR-14 17:47:43	

AMWTP
Advanced Mixed Waste Treatment Project

AMWTP

VE Boxline and Repackaging Report

Date: 22-Sep-2014

Time: 08:04

Batch Id VEB14-00099 **Container Id** 10516384 **Analysis Id** 0000316545

VE Date 10-APR-14 20:07:56 **Analysis Status** Pass

Gen-IDC Code BN-508 AMWTP Newly Generated Debris **VE Weight** 158.76 lbs.

Closure Date 10-APR-14 20:07:56 **Procedure Id** INST-FOI-17 **Net Weight** 132.76 lbs.

Container Type 55 **Revision** 27

Operator 1 JOHN CUNNINGHAM **Waste Matrix** S5490 **Summary Category Group** S5000

Operator 2 JUSTIN BURTON **Equipment ID** VE BiD RPCK

General

Rigid Liner Present? No **Liner Type** NO LINER **Closure Method** No Bags

Liner Punctured? Yes **Layers Of Confinement** 0 **Fill Factor** 65 % **Liner Lid Present** No

Liquids

Liquids Present? No **Comment**

Liquid Between Liner and Drum 0 pints **Other Liquids** 0 pints

Containerized Liquid pints **Total Liquid Amount** 0 pints

Internal Container with Liquid 0 pints

Internal Container with Liquid No

Prohibited Liquids Present No

Containerized Liquid

Contents

Sharp Objects? Yes **Are Sharp Objects Protected?** No

	Value	*Comment*
Prohibited Compressed Gas Present?	No	
Explosives Present?	No	
Pyrophorics Present?	No	
Mercury Present?	No	
PCBs Present?	No	
PCB Mass (lbs)	0	
Wet Cell Batteries Present?	No	
Corrosives,Ignitables or Reactives Present?	No	
Beryllium Contaminates Present?	No	
Hazardous-Only Waste Present?	No	
Is Waste Incompatible with backfill, packaging materials, or shipping container materials?	No	
Sealed Containers Over 4L?	No	

IDC Verification

Is IDC correct? Yes **Recommended IDC** -

IDC Change Reason

Visual Exam Comment Remaining waste by weight percent is Iron-based Metals/Alloys consisting of scrap metal.

Batch Id VEB14-00099 **Container Id** 10516384 **Analysis Id** 0000316545

Source Container

Is there a source container? Yes

Source Container ID	Location	IDC
10508936	destroyed @ 676- BXI/15	RF-760

IDC CODES

Current Container IDC Code: BN-508 **Recommended IDC Code:** -

Waste Material Items

Packaging Materials

Material Item	Quantity	Unit	Unit Wt	Item Wt(lbs)

Waste Items by Weight

Material Item	Quantity	Unit	Unit Wt	Item Wt(lbs)

Waste Items by Volume

Material Item	Quantity	Unit	Unit Wt	Item Wt(lbs)
Paper	1.000	PINTS	0.969	0.970
Plastic	5.000	PINTS	0.937	4.690

Waste Parameters

Waste Parameter	Remaining Weight %	Actual Weight Lbs
Iron-based Metals/Alloys	100.000	127.100
Aluminum-based Metals/Alloys	0.000	0.000
Other metals	0.000	0.000
Other Inorganic Materials	0.000	0.000
Cellulosics	0.000	0.970
Rubber	0.000	0.000
Plastic (Waste Materials)	0.000	4.690
Inorganic matrix	0.000	0.000
Organic matrix	0.000	0.000
Soils/gravel	0.000	0.000
Steel (packaging materials)	0.000	26.000
Plastic (packaging materials)	0.000	0.000
Cellulosics Packaging	0.000	0.000
MLLW Waste	0.000	0.000

Esignature History

Esig Approval Id	User Id	E-signature Date	Comment
2730664	JCUNNINGHAM	10-APR-14 20:07:57	
2730665	JBURTON	10-APR-14 20:08:00	

Batch Id VEB14-00099 **Container Id** 10516317 **Analysis Id** 0000316549

VE Date 10-APR-14 20:46:16 **Analysis Status** Pass

Gen-IDC Code BN-508 AMWTP Newly Generated Debris **VE Weight** 59.54 lbs.

Closure Date 10-APR-14 20:46:16 **Procedure Id** INST-FOI-17 **Net Weight** 33.54 lbs.

Container Type 55 **Revision** 27

Operator 1 SHANE HIGH **Waste Matrix** S5490 **Summary Category Group** S5000

Operator 2 AARON FENN **Equipment ID** VE BiD RPCK

General

Rigid Liner Present? No **Liner Type** NO LINER **Closure Method** No Bags

Liner Punctured? Yes **Layers Of Confinement** 0 **Fill Factor** 75 % **Liner Lid Present** No

Liquids

Liquids Present? No **Comment**

Liquid Between Liner and Drum 0 pints **Other Liquids** 0 pints

Containerized Liquid pints **Total Liquid Amount** 0 pints

Internal Container with Liquid 0 pints

Internal Container with Liquid No

Prohibited Liquids Present No

Containerized Liquid

Contents

Sharp Objects? No **Are Sharp Objects Protected?** Yes

	Value	*Comment*
Prohibited Compressed Gas Present?	No	
Explosives Present?	No	
Pyrophorics Present?	No	
Mercury Present?	No	
PCBs Present?	No	
PCB Mass (lbs)	0	
Wet Cell Batteries Present?	No	
Corrosives,Ignitables or Reactives Present?	No	
Beryllium Contaminates Present?	No	
Hazardous-Only Waste Present?	No	
Is Waste Incompatible with backfill, packaging materials, or shipping container materials?	No	
Sealed Containers Over 4L?	No	

IDC Verification

Is IDC correct? Yes **Recommended IDC** -

IDC Change Reason

Visual Exam Comment Waste is Plastic consisting of sheeting and tape.

Advanced Mixed Waste Treatment Project

VE Boxline and Repackaging Report

Batch Id VEB14-00099 Container Id 10516317 Analysis Id 0000316549

Source Container

Is there a source container? Yes

Source Container ID	Location	IDC
10509022	destroyed @ 676- BXI/9	RF-760

IDC CODES

Current Container IDC Code: BN-508 Recommended IDC Code: -

Waste Material Items

Packaging Materials

Material Item	Quantity	Unit	Unit Wt	Item Wt(lbs)

Waste Items by Weight

Material Item	Quantity	Unit	Unit Wt	Item Wt(lbs)

Waste Items by Volume

Material Item	Quantity	Unit	Unit Wt	Item Wt(lbs)

Waste Parameters

Waste Parameter	Remaining Weight %	Actual Weight Lbs
Iron-based Metals/Alloys	0.000	0.000
Aluminum-based Metals/Alloys	0.000	0.000
Other metals	0.000	0.000
Other Inorganic Materials	0.000	0.000
Cellulosics	0.000	0.000
Rubber	0.000	0.000
Plastic (Waste Materials)	100.000	33.535
Inorganic matrix	0.000	0.000
Organic matrix	0.000	0.000
Soils/gravel	0.000	0.000
Steel (packaging materials)	0.000	26.000
Plastic (packaging materials)	0.000	0.000
Cellulosics Packaging	0.000	0.000
MLLW Waste	0.000	0.000

Esignature History

Esig Approval Id	User Id	E-signature Date	Comment
2730669	SHIGH	10-APR-14 20:46:16	
2730670	AFENN	10-APR-14 20:46:18	

AMWTP
Advanced Mixed Waste Treatment Project

AMWTP

VE Boxline and Repackaging Report

Date: 22-Sep-2014

Time: 08:04

Batch Id VEB14-00099 **Container Id** 10516315 **Analysis Id** 0000316550

VE Date 10-APR-14 20:57:23 **Analysis Status** Pass

Gen-IDC Code BN-508 AMWTP Newly Generated Debris **VE Weight** 57.33 lbs.

Closure Date 10-APR-14 20:57:23 **Procedure Id** INST-FOI-17 **Net Weight** 31.33 lbs.

Container Type 55 **Revision** 27

Operator 1 SHANE HIGH **Waste Matrix** S5490 **Summary Category Group** S5000

Operator 2 AARON FENN **Equipment ID** VE BiD RPCK

General

Rigid Liner Present? No **Liner Type** NO LINER **Closure Method** No Bags

Liner Punctured? Yes **Layers Of Confinement** 0 **Fill Factor** 70 % **Liner Lid Present** No

Liquids

Liquids Present? No **Comment**

Liquid Between Liner and Drum 0 pints **Other Liquids** 0 pints

Containerized Liquid pints **Total Liquid Amount** 0 pints

Internal Container with Liquid 0 pints

Internal Container with Liquid No

Prohibited Liquids Present No

Containerized Liquid

Contents

Sharp Objects? No **Are Sharp Objects Protected?** Yes

	Value	*Comment*
Prohibited Compressed Gas Present?	No	
Explosives Present?	No	
Pyrophorics Present?	No	
Mercury Present?	No	
PCBs Present?	No	
PCB Mass (lbs)	0	
Wet Cell Batteries Present?	No	
Corrosives,Ignitables or Reactives Present?	No	
Beryllium Contaminates Present?	No	
Hazardous-Only Waste Present?	No	
Is Waste Incompatible with backfill, packaging materials, or shipping container materials?	No	
Sealed Containers Over 4L?	No	

IDC Verification

Is IDC correct? Yes **Recommended IDC** -

IDC Change Reason

Visual Exam Comment Waste is Plastic consisting of sheeting and tape.

VE Boxline and Repackaging Report

Batch Id VEB14-00099 Container Id 10516315 Analysis Id 0000316550

Source Container

Is there a source container? Yes

Source Container ID	Location	IDC
10509022	destroyed @ 676- BXI/9	RF-760

IDC CODES

Current Container IDC Code: BN-508 Recommended IDC Code: -

Waste Material Items

Packaging Materials

Material Item	Quantity	Unit	Unit Wt	Item Wt(lbs)

Waste Items by Weight

Material Item	Quantity	Unit	Unit Wt	Item Wt(lbs)

Waste Items by Volume

Material Item	Quantity	Unit	Unit Wt	Item Wt(lbs)

Waste Parameters

Waste Parameter	Remaining Weight %	Actual Weight Lbs
Iron-based Metals/Alloys	0.000	0.000
Aluminum-based Metals/Alloys	0.000	0.000
Other metals	0.000	0.000
Other Inorganic Materials	0.000	0.000
Cellulosics	0.000	0.000
Rubber	0.000	0.000
Plastic (Waste Materials)	100.000	31.330
Inorganic matrix	0.000	0.000
Organic matrix	0.000	0.000
Soils/gravel	0.000	0.000
Steel (packaging materials)	0.000	26.000
Plastic (packaging materials)	0.000	0.000
Cellulosics Packaging	0.000	0.000
MLLW Waste	0.000	0.000

Esignature History

Esig Approval Id	User Id	E-signature Date	Comment
2730672	SHIGH	10-APR-14 20:57:23	
2730673	AFENN	10-APR-14 20:57:26	

AMWTP
Advanced Mixed Waste Treatment Project

AMWTP

VE Boxline and Repackaging Report

Date: 22-Sep-2014
Time: 08:04

Batch Id VEB14-00099 **Container Id** 10516278 **Analysis Id** 0000316551

VE Date 10-APR-14 22:08:29 **Analysis Status** Pass
Gen-IDC Code BN-508 AMWTP Newly Generated Debris **VE Weight** 52.92 lbs.
Closure Date 10-APR-14 22:08:29 **Procedure Id** INST-FOI-17 **Net Weight** 26.92 lbs.
Container Type 55 **Revision** 27
Operator 1 SHANE HIGH **Waste Matrix** S5490 **Summary Category Group** S5000
Operator 2 AARON FENN **Equipment ID** VE BiD RPCK

General

Rigid Liner Present? No **Liner Type** NO LINER **Closure Method** No Bags
Liner Punctured? Yes **Layers Of Confinement** 0 **Fill Factor** 65 % **Liner Lid Present** No

Liquids

Liquids Present? No **Comment**

Liquid Between Liner and Drum 0 pints
Containerized Liquid pints
Internal Container with Liquid 0 pints
Other Liquids 0 pints
Total Liquid Amount 0 pints

Internal Container with Liquid No

Prohibited Liquids Present No

Containerized Liquid

Contents

Sharp Objects? Yes **Are Sharp Objects Protected?** No

	Value	*Comment*
Prohibited Compressed Gas Present?	No	
Explosives Present?	No	
Pyrophorics Present?	No	
Mercury Present?	No	
PCBs Present?	No	
PCB Mass (lbs)	0	
Wet Cell Batteries Present?	No	
Corrosives,Ignitables or Reactives Present?	No	
Beryllium Contaminates Present?	No	
Hazardous-Only Waste Present?	No	
Is Waste Incompatible with backfill, packaging materials, or shipping container materials?	No	
Sealed Containers Over 4L?	No	

IDC Verification

Is IDC correct? Yes **Recommended IDC** -

IDC Change Reason

Visual Exam Comment Waste is Plastic consisting of plastic sheeting and tape.

Batch Id VEB14-00099 **Container Id** 10516278 **Analysis Id** 0000316551

Source Container

Is there a source container? Yes

Source Container ID	Location	IDC
10509022	destroyed @ 676- BXI/9	RF-760

IDC CODES

Current Container IDC Code: BN-508 **Recommended IDC Code:** -

Waste Material Items

Packaging Materials

Material Item	Quantity	Unit	Unit Wt	Item Wt(lbs)

Waste Items by Weight

Material Item	Quantity	Unit	Unit Wt	Item Wt(lbs)

Waste Items by Volume

Material Item	Quantity	Unit	Unit Wt	Item Wt(lbs)
Wood	4.000	PINTS	0.702	2.810
Iron	0.250	PINTS	7.807	1.950

Waste Parameters

Waste Parameter	Remaining Weight %	Actual Weight Lbs
Iron-based Metals/Alloys	0.000	1.950
Aluminum-based Metals/Alloys	0.000	0.000
Other metals	0.000	0.000
Other Inorganic Materials	0.000	0.000
Cellulosics	0.000	2.810
Rubber	0.000	0.000
Plastic (Waste Materials)	100.000	22.160
Inorganic matrix	0.000	0.000
Organic matrix	0.000	0.000
Soils/gravel	0.000	0.000
Steel (packaging materials)	0.000	26.000
Plastic (packaging materials)	0.000	0.000
Cellulosics Packaging	0.000	0.000
MLLW Waste	0.000	0.000

Esignature History

Esig Approval Id	User Id	E-signature Date	Comment
2730690	SHIGH	10-APR-14 22:08:30	
2730691	AFENN	10-APR-14 22:08:32	

AMWTP
Advanced Mixed Waste Treatment Project

AMWTP

VE Boxline and Repackaging Report

Date: 22-Sep-2014

Time: 08:04

Batch Id VEB14-00099 **Container Id** 10516350 **Analysis Id** 0000316552

VE Date 10-APR-14 23:56:17 **Analysis Status** Pass

Gen-IDC Code BN-508 AMWTP Newly Generated Debris **VE Weight** 81.59 lbs.

Closure Date 10-APR-14 23:56:17 **Procedure Id** INST-FOI-17 **Net Weight** 55.59 lbs.

Container Type 55 **Revision** 27

Operator 1 SHANE HIGH **Waste Matrix** S5490 **Summary Category Group** S5000

Operator 2 AARON FENN **Equipment ID** VE BiD RPCK

General

Rigid Liner Present? No **Liner Type** NO LINER **Closure Method** No Bags

Liner Punctured? Yes **Layers Of Confinement** 0 **Fill Factor** 65 % **Liner Lid Present** No

Liquids

Liquids Present? No **Comment**

Liquid Between Liner and Drum 0 pints **Other Liquids** 0 pints

Containerized Liquid pints **Total Liquid Amount** 0 pints

Internal Container with Liquid 0 pints

Internal Container with Liquid No

Prohibited Liquids Present No

Containerized Liquid

Contents

Sharp Objects? No **Are Sharp Objects Protected?** Yes

	Value	*Comment*
Prohibited Compressed Gas Present?	No	
Explosives Present?	No	
Pyrophorics Present?	No	
Mercury Present?	No	
PCBs Present?	No	
PCB Mass (lbs)	0	
Wet Cell Batteries Present?	No	
Corrosives,Ignitables or Reactives Present?	No	
Beryllium Contaminates Present?	No	
Hazardous-Only Waste Present?	No	
Is Waste Incompatible with backfill, packaging materials, or shipping container materials?	No	
Sealed Containers Over 4L?	No	

IDC Verification

Is IDC correct? Yes **Recommended IDC** -

IDC Change Reason

Visual Exam Comment Waste is cellulosics consisting of wood debris.

Batch Id VEB14-00099 Container Id 10516350 Analysis Id 0000316552

---Source Container---

Is there a source container? Yes

Source Container ID	Location	IDC
10509022	destroyed @ 676- BXI/9	RF-760

---IDC CODES---

Current Container IDC Code: BN-508 Recommended IDC Code: -

---Waste Material Items---

---Packaging Materials---

Material Item	Quantity	Unit	Unit Wt	Item Wt(lbs)

---Waste Items by Weight---

Material Item	Quantity	Unit	Unit Wt	Item Wt(lbs)

---Waste Items by Volume---

Material Item	Quantity	Unit	Unit Wt	Item Wt(lbs)

---Waste Parameters---

Waste Parameter	Remaining Weight %	Actual Weight Lbs
Iron-based Metals/Alloys	0.000	0.000
Aluminum-based Metals/Alloys	0.000	0.000
Other metals	0.000	0.000
Other Inorganic Materials	0.000	0.000
Cellulosics	100.000	55.585
Rubber	0.000	0.000
Plastic (Waste Materials)	0.000	0.000
Inorganic matrix	0.000	0.000
Organic matrix	0.000	0.000
Soils/gravel	0.000	0.000
Steel (packaging materials)	0.000	26.000
Plastic (packaging materials)	0.000	0.000
Cellulosics Packaging	0.000	0.000
MLLW Waste	0.000	0.000

---Esignature History---

Esig Approval Id	User Id	E-signature Date	Comment
2730713	SHIGH	10-APR-14 23:56:18	
2730714	AFENN	10-APR-14 23:56:23	

AMWTP

Advanced Mixed Waste Treatment Project

AMWTP

VE Boxline and Repackaging Report

Date: 22-Sep-2014

Time: 08:04

Batch Id VEB14-00099 **Container Id** 10516326 **Analysis Id** 0000316553

VE Date 11-APR-14 00:11:00 **Analysis Status** Pass

Gen-IDC Code BN-508 AMWTP Newly Generated Debris **VE Weight** 83.79 lbs.

Closure Date 11-APR-14 00:11:00 **Procedure Id** INST-FOI-17 **Net Weight** 57.79 lbs.

Container Type 55 **Revision** 27

Operator 1 SHANE HIGH **Waste Matrix** S5490 **Summary Category Group** S5000

Operator 2 AARON FENN **Equipment ID** VE BiD RPCK

General

Rigid Liner Present? No **Liner Type** NO LINER **Closure Method** No Bags

Liner Punctured? Yes **Layers Of Confinement** 0 **Fill Factor** 70 % **Liner Lid Present** No

Liquids

Liquids Present? No **Comment**

Liquid Between Liner and Drum 0 pints **Other Liquids** 0 pints

Containerized Liquid pints **Total Liquid Amount** 0 pints

Internal Container with Liquid 0 pints

Internal Container with Liquid No

Prohibited Liquids Present No

Containerized Liquid

Contents

Sharp Objects? No **Are Sharp Objects Protected?** Yes

	Value	*Comment*
Prohibited Compressed Gas Present?	No	
Explosives Present?	No	
Pyrophorics Present?	No	
Mercury Present?	No	
PCBs Present?	No	
PCB Mass (lbs)	0	
Wet Cell Batteries Present?	No	
Corrosives,Ignitables or Reactives Present?	No	
Beryllium Contaminates Present?	No	
Hazardous-Only Waste Present?	No	
Is Waste Incompatible with backfill, packaging materials, or shipping container materials?	No	
Sealed Containers Over 4L?	No	

IDC Verification

Is IDC correct? Yes **Recommended IDC** -

IDC Change Reason

Visual Exam Comment Waste is cellulosics consisting of wood debris.

Batch Id VEB14-00099 **Container Id** 10516326 **Analysis Id** 0000316553

Source Container

Is there a source container? Yes

Source Container ID	Location	IDC
10509022	destroyed @ 676- BXI/9	RF-760

IDC CODES

Current Container IDC Code: BN-508 **Recommended IDC Code:** -

Waste Material Items

Packaging Materials

Material Item	Quantity	Unit	Unit Wt	Item Wt(lbs)

Waste Items by Weight

Material Item	Quantity	Unit	Unit Wt	Item Wt(lbs)

Waste Items by Volume

Material Item	Quantity	Unit	Unit Wt	Item Wt(lbs)

Waste Parameters

Waste Parameter	Remaining Weight %	Actual Weight Lbs
Iron-based Metals/Alloys	0.000	0.000
Aluminum-based Metals/Alloys	0.000	0.000
Other metals	0.000	0.000
Other Inorganic Materials	0.000	0.000
Cellulosics	100.000	57.790
Rubber	0.000	0.000
Plastic (Waste Materials)	0.000	0.000
Inorganic matrix	0.000	0.000
Organic matrix	0.000	0.000
Soils/gravel	0.000	0.000
Steel (packaging materials)	0.000	26.000
Plastic (packaging materials)	0.000	0.000
Cellulosics Packaging	0.000	0.000
MLLW Waste	0.000	0.000

Esignature History

Esig Approval Id	User Id	E-signature Date	Comment
2730717	SHIGH	11-APR-14 00:11:00	
2730718	AFENN	11-APR-14 00:11:02	

AMWTP
Advanced Mixed Waste Treatment Project

AMWTP

VE Boxline and Repackaging Report

Date: 22-Sep-2014
Time: 08:04

Batch Id VEB14-00099 **Container Id** 10516358 **Analysis Id** 0000316554

VE Date 11-APR-14 00:20:56 **Analysis Status** Pass
Gen-IDC Code BN-508 AMWTP Newly Generated Debris **VE Weight** 191.84 lbs.
Closure Date 11-APR-14 00:20:56 **Procedure Id** INST-FOI-17 **Net Weight** 165.84 lbs.
Container Type 55 **Revision** 27
Operator 1 JOHN CUNNINGHAM **Waste Matrix** S5490 **Summary Category Group** S5000
Operator 2 JUSTIN BURTON **Equipment ID** VE BiD RPCK

General

Rigid Liner Present? No **Liner Type** NO LINER **Closure Method** No Bags
Liner Punctured? Yes **Layers Of Confinement** 0 **Fill Factor** 55 % **Liner Lid Present** No

Liquids

Liquids Present? No **Comment**

Liquid Between Liner and Drum 0 pints **Other Liquids** 0 pints
Containerized Liquid pints **Total Liquid Amount** 0 pints
Internal Container with Liquid 0 pints

Internal Container with Liquid No

Prohibited Liquids Present No

Containerized Liquid

Contents

Sharp Objects? Yes **Are Sharp Objects Protected?** No

	Value	*Comment*
Prohibited Compressed Gas Present?	No	
Explosives Present?	No	
Pyrophorics Present?	No	
Mercury Present?	No	
PCBs Present?	No	
PCB Mass (lbs)	0	
Wet Cell Batteries Present?	No	
Corrosives,Ignitables or Reactives Present?	No	
Beryllium Contaminates Present?	No	
Hazardous-Only Waste Present?	No	
Is Waste Incompatible with backfill, packaging materials, or shipping container materials?	No	
Sealed Containers Over 4L?	No	

IDC Verification

Is IDC correct? Yes **Recommended IDC** -

IDC Change Reason

Visual Exam Comment Remaining waste by weight percent is Iron-based Metals/Alloys consisting of scrap metal.

Batch Id VEB14-00099 **Container Id** 10516358 **Analysis Id** 0000316554

Source Container

Is there a source container? Yes

Source Container ID	Location	IDC
10508936	destroyed @ 676- BXI/15	RF-760

IDC CODES

Current Container IDC Code: BN-508 **Recommended IDC Code:** -

Waste Material Items

Packaging Materials

Material Item	Quantity	Unit	Unit Wt	Item Wt(lbs)

Waste Items by Weight

Material Item	Quantity	Unit	Unit Wt	Item Wt(lbs)

Waste Items by Volume

Material Item	Quantity	Unit	Unit Wt	Item Wt(lbs)
Paper	2.000	PINTS	0.969	1.940
Rubber	1.000	PINTS	1.554	1.550
Plastic	3.000	PINTS	0.937	2.810

Waste Parameters

Waste Parameter	Remaining Weight %	Actual Weight Lbs
Iron-based Metals/Alloys	100.000	159.535
Aluminum-based Metals/Alloys	0.000	0.000
Other metals	0.000	0.000
Other Inorganic Materials	0.000	0.000
Cellulosics	0.000	1.940
Rubber	0.000	1.550
Plastic (Waste Materials)	0.000	2.810
Inorganic matrix	0.000	0.000
Organic matrix	0.000	0.000
Soils/gravel	0.000	0.000
Steel (packaging materials)	0.000	26.000
Plastic (packaging materials)	0.000	0.000
Cellulosics Packaging	0.000	0.000
MLLW Waste	0.000	0.000

Esignature History

Esig Approval Id	User Id	E-signature Date	Comment
2730720	JCUNNINGHAM	11-APR-14 00:20:56	
2730721	JBURTON	11-APR-14 00:20:58	

Batch Id VEB14-00099 **Container Id** 10516280 **Analysis Id** 0000316555

VE Date 11-APR-14 00:29:57 **Analysis Status** Pass

Gen-IDC Code BN-508 AMWTP Newly Generated Debris **VE Weight** 59.54 lbs.

Closure Date 11-APR-14 00:29:57 **Procedure Id** INST-FOI-17 **Net Weight** 33.54 lbs.

Container Type 55 **Revision** 27

Operator 1 SHANE HIGH **Waste Matrix** S5490 **Summary Category Group** S5000

Operator 2 AARON FENN **Equipment ID** VE BiD RPCK

General

Rigid Liner Present? No **Liner Type** NO LINER **Closure Method** No Bags

Liner Punctured? Yes **Layers Of Confinement** 0 **Fill Factor** 70 % **Liner Lid Present** No

Liquids

Liquids Present? No **Comment**

Liquid Between Liner and Drum 0 pints **Other Liquids** 0 pints

Containerized Liquid pints **Total Liquid Amount** 0 pints

Internal Container with Liquid 0 pints

Internal Container with Liquid No

Prohibited Liquids Present No

Containerized Liquid

Contents

Sharp Objects? No **Are Sharp Objects Protected?** Yes

	Value	*Comment*
Prohibited Compressed Gas Present?	No	
Explosives Present?	No	
Pyrophorics Present?	No	
Mercury Present?	No	
PCBs Present?	No	
PCB Mass (lbs)	0	
Wet Cell Batteries Present?	No	
Corrosives,Ignitables or Reactives Present?	No	
Beryllium Contaminates Present?	No	
Hazardous-Only Waste Present?	No	
Is Waste Incompatible with backfill, packaging materials, or shipping container materials?	No	
Sealed Containers Over 4L?	No	

IDC Verification

Is IDC correct? Yes **Recommended IDC** -

IDC Change Reason

Visual Exam Comment Waste is cellulosics consisting of wood debris.

VE Boxline and Repackaging Report

Batch Id VEB14-00099 **Container Id** 10516280 **Analysis Id** 0000316555

Source Container

Is there a source container? Yes

Source Container ID	Location	IDC
10509022	destroyed @ 676-BXI/9	RF-760

IDC CODES

Current Container IDC Code: BN-508 **Recommended IDC Code:** -

Waste Material Items

Packaging Materials

Material Item	Quantity	Unit	Unit Wt	Item Wt(lbs)

Waste Items by Weight

Material Item	Quantity	Unit	Unit Wt	Item Wt(lbs)

Waste Items by Volume

Material Item	Quantity	Unit	Unit Wt	Item Wt(lbs)

Waste Parameters

Waste Parameter	Remaining Weight %	Actual Weight Lbs
Iron-based Metals/Alloys	0.000	0.000
Aluminum-based Metals/Alloys	0.000	0.000
Other metals	0.000	0.000
Other Inorganic Materials	0.000	0.000
Cellulosics	100.000	33.535
Rubber	0.000	0.000
Plastic (Waste Materials)	0.000	0.000
Inorganic matrix	0.000	0.000
Organic matrix	0.000	0.000
Soils/gravel	0.000	0.000
Steel (packaging materials)	0.000	26.000
Plastic (packaging materials)	0.000	0.000
Cellulosics Packaging	0.000	0.000
MLLW Waste	0.000	0.000

Esignature History

Esig Approval Id	User Id	E-signature Date	Comment
2730723	SHIGH	11-APR-14 00:29:58	
2730724	AFENN	11-APR-14 00:30:00	

AMWTP
Advanced Mixed Waste Treatment Project

AMWTP

VE Boxline and Repackaging Report

Date: 22-Sep-2014

Time: 08:04

Batch Id VEB14-00099 **Container Id** 10516283 **Analysis Id** 0000316556

VE Date 11-APR-14 00:42:04 **Analysis Status** Pass

Gen-IDC Code BN-508 AMWTP Newly Generated Debris **VE Weight** 63.95 lbs.

Closure Date 11-APR-14 00:42:04 **Procedure Id** INST-FOI-17 **Net Weight** 37.95 lbs.

Container Type 55 **Revision** 27

Operator 1 SHANE HIGH **Waste Matrix** S5490 **Summary Category Group** S5000

Operator 2 AARON FENN **Equipment ID** VE BiD RPCK

General

Rigid Liner Present? No **Liner Type** NO LINER **Closure Method** No Bags

Liner Punctured? Yes **Layers Of Confinement** 0 **Fill Factor** 70 % **Liner Lid Present** No

Liquids

Liquids Present? No **Comment**

Liquid Between Liner and Drum 0 pints **Other Liquids** 0 pints

Containerized Liquid pints **Total Liquid Amount** 0 pints

Internal Container with Liquid 0 pints

Internal Container with Liquid No

Prohibited Liquids Present No

Containerized Liquid

Contents

Sharp Objects? No **Are Sharp Objects Protected?** Yes

	Value	*Comment*
Prohibited Compressed Gas Present?	No	
Explosives Present?	No	
Pyrophorics Present?	No	
Mercury Present?	No	
PCBs Present?	No	
PCB Mass (lbs)	0	
Wet Cell Batteries Present?	No	
Corrosives,Ignitables or Reactives Present?	No	
Beryllium Contaminates Present?	No	
Hazardous-Only Waste Present?	No	
Is Waste Incompatible with backfill, packaging materials, or shipping container materials?	No	
Sealed Containers Over 4L?	No	

IDC Verification

Is IDC correct? Yes **Recommended IDC** -

IDC Change Reason

Visual Exam Comment Waste is cellulosics consisting of wood debris.

Batch Id VEB14-00099 **Container Id** 10516283 **Analysis Id** 0000316556

Source Container

Is there a source container? Yes

Source Container ID	Location	IDC
10509022	destroyed @ 676- BXI/9	RF-760

IDC CODES

Current Container IDC Code: BN-508 **Recommended IDC Code:** -

Waste Material Items

Packaging Materials

Material Item	Quantity	Unit	Unit Wt	Item Wt(lbs)

Waste Items by Weight

Material Item	Quantity	Unit	Unit Wt	Item Wt(lbs)

Waste Items by Volume

Material Item	Quantity	Unit	Unit Wt	Item Wt(lbs)

Waste Parameters

Waste Parameter	Remaining Weight %	Actual Weight Lbs
Iron-based Metals/Alloys	0.000	0.000
Aluminum-based Metals/Alloys	0.000	0.000
Other metals	0.000	0.000
Other Inorganic Materials	0.000	0.000
Cellulosics	100.000	37.945
Rubber	0.000	0.000
Plastic (Waste Materials)	0.000	0.000
Inorganic matrix	0.000	0.000
Organic matrix	0.000	0.000
Soils/gravel	0.000	0.000
Steel (packaging materials)	0.000	26.000
Plastic (packaging materials)	0.000	0.000
Cellulosics Packaging	0.000	0.000
MLLW Waste	0.000	0.000

Esignature History

Esig Approval Id	User Id	E-signature Date	Comment
2730729	SHIGH	11-APR-14 00:42:05	
2730730	AFENN	11-APR-14 00:42:07	

-----End of VE Boxline Report-----

AMWTP
Advanced Mixed Waste Treatment Project

AMWTP

Non-Conformance Report

Date: 22-Sep-2014

Time: 08:05

*****Batch NCR(s)*****

Batch Type	VEB	Batch ID	VEB14-00099		
Trackwise Number		**Status**		**Opened Date**	**Closed Date**

*****Container NCR(s)*****

Container ID *or related Batch ID*	**Trackwise Number**	**Status**	**Opened Date**	**Closed Date**

*****End of Non-Conformance Report*****

AMWTP
Advanced Mixed Waste Treatment Project

AMWTP

Scale Check Event Report

Date: 22-Sep-2014

Time: 08:06

Batch Id	VEB14-00099	**Container Id**	10516377
Batch Id	VEB14-00099	**Container Id**	10516358
Batch Id	VEB14-00099	**Container Id**	10516389
Batch Id	VEB14-00099	**Container Id**	10516283
Batch Id	VEB14-00099	**Container Id**	10516350
Batch Id	VEB14-00099	**Container Id**	10516326
Batch Id	VEB14-00099	**Container Id**	10516280
Batch Id	VEB14-00099	**Container Id**	10516381
Batch Id	VEB14-00099	**Container Id**	10516393
Batch Id	VEB14-00099	**Container Id**	10516347
Batch Id	VEB14-00099	**Container Id**	10516317
Batch Id	VEB14-00099	**Container Id**	10516363
Batch Id	VEB14-00099	**Container Id**	10516370
Batch Id	VEB14-00099	**Container Id**	10516315
Batch Id	VEB14-00099	**Container Id**	10516366
Batch Id	VEB14-00099	**Container Id**	10516385
Batch Id	VEB14-00099	**Container Id**	10516380
Batch Id	VEB14-00099	**Container Id**	10516325
Batch Id	VEB14-00099	**Container Id**	10516384
Batch Id	VEB14-00099	**Container Id**	10516278

AMWTP

Advanced Mixed Waste Treatment Project

AMWTP

Batch Report Coversheet

Date: 22-Sep-2014

Time: 07:43

Batch Type VE Boxline

Batch Id VEB14-00100

Batch Status AP

Test Facility Idaho AMWTP

Equipment Id VE BiD RPCK VE Box Repackaging Into Drums

Batch Report No. VEB14-00100

Open Date 11-APR-14 00:47:33

Close Date 13-APR-14 23:16:41

Container Id	IDC	Analysis Id	Date Examined	QC Type	Analysis Status	Operator
10516344	BN-508	0000316557	11-APR-14 00:47:33	Original	P	JOHN CUNNINGHAM
10516335	BN-508	0000316558	11-APR-14 00:52:30	Original	P	JOHN CUNNINGHAM
10516314	BN-508	0000316559	11-APR-14 01:00:54	Original	P	SHANE HIGH
10516341	BN-508	0000316560	11-APR-14 01:01:38	Original	P	JOHN CUNNINGHAM
10516318	BN-508	0000316561	11-APR-14 01:14:26	Original	P	JOHN CUNNINGHAM
10516342	BN-508	0000316562	11-APR-14 01:22:54	Original	P	JOHN CUNNINGHAM
10516346	BN-508	0000316563	11-APR-14 01:31:49	Original	P	JOHN CUNNINGHAM
10516324	BN-508	0000316564	11-APR-14 01:39:43	Original	P	JOHN CUNNINGHAM
10516316	BN-508	0000316565	11-APR-14 01:44:23	Original	P	JOHN CUNNINGHAM
10516330	BN-508	0000316567	13-APR-14 20:50:44	Original	P	REX BUSH
10516334	BN-508	0000316569	13-APR-14 21:04:32	Original	P	REX BUSH
10516322	BN-508	0000316571	13-APR-14 21:30:53	Original	P	REX BUSH
10516343	BN-508	0000316574	13-APR-14 21:55:27	Original	P	SHIRLEY PEREZ
10516284	BN-508	0000316575	13-APR-14 22:00:58	Original	P	REX BUSH
10516345	BN-508	0000316576	13-APR-14 22:20:56	Original	P	SHIRLEY PEREZ
10516287	BN-508	0000316577	13-APR-14 22:20:33	Original	P	REX BUSH
10516319	BN-508	0000316578	13-APR-14 22:35:30	Original	P	SHIRLEY PEREZ
10516337	BN-508	0000316579	13-APR-14 22:50:07	Original	P	REX BUSH
10516339	BN-508	0000316580	13-APR-14 22:52:49	Original	P	SHIRLEY PEREZ
10516321	BN-508	0000316581	13-APR-14 23:15:41	Original	P	SHIRLEY PEREZ

**********Batch Comments**********

Written By	Date	Comment
CSIMMONS	14-APR-14 07:18:55	This batch was validated to MP-TRUW-8.8.
CSIMMONS	14-APR-14 07:18:55	Promoted batch to SPM level.
NSTYHL	14-APR-14 13:53:51	SPM review complete.
NSTYHL	14-APR-14 13:53:51	Approve batch.

**********Batch E-Signature History**********

Approval ID	User ID	Signature Date	Comment
2732064	CSIMMONS	14-APR-2014 07:18:55	Promoted batch to SPM level.
2732382	NSTYHL	14-APR-2014 13:53:51	Approve batch.

***** End of Batch Report Coversheet Report *****

AMWTP
Advanced Mixed Waste Treatment Project

AMWTP

Checklist Report

Date: 22-Sep-2014
Time: 07:43

Batch Id VEB14-00100 **Open Date** 11-APR-14 **Close Date** 13-APR-14

Reviewer CRAIG SIMMONS **Approval Level** Independent Technical Reviewer
Approval Date 14-APR-14 **Review Iteration** 1

Question Text	Answer	Requirement	Comment
1. Is the QA documentation for the Batch Data Reports complete and includes data reports and QC results? o VE Batch Coversheet o Table of Contents (manual review only) o VE Analysis Reports o Analytical Balance Calibration Check Sheet (Form-1215), if applicable (manual review only) o ITR Checklist (Form-1415, manual review only) o Batch Data Report Supplemental Comment Form (Form-1491, manual review only) o Associated NCRs (referenced in WTS) o Audio/Video Recording References, if applicable	Yes		
2. Are there 20 containers or less in the batch?	Yes		
3. Was each VE Operator qualified at the time of the VE event?	Yes		
4. Was a VE data form completed for each container in the batch?	Yes		
Was the data generated in a technically correct manner using the correct revision of INST-OI-34, Non-facility Visual Examination or INST-FOI-17, Facility Visual Examination Operations, as applicable.	Yes		
6. Was the correct revision of the procedure documented on each analysis report?	Yes		
7. Was the E-signature History review performed?	Yes		
8. Was guidance from VEE documented, as applicable?	N/A		Not applicable for this VEB batch.
9. Does every drum reported in the batch have a valid audio/video recording (as applicable)?	N/A		Not applicable for this VEB batch.
10. Does the physical form match the waste stream description, waste matrix code and IDC?	Yes		
11. Did the VE event result in an IDC/Waste Matrix Code change? If so, was an NCR initiated?	No		
12. Were the waste material parameters documented correctly?	Yes		
13. Was the presence or absence of prohibited items properly identified? o If prohibited items were identified, were NCRs initiated?	Yes		
14. Has the description of rigid liners and layers of confinement been properly documented?	Yes		
15. Was the drum age criteria (DAC) entered correctly and completely? o Closure Method(s) o Liner Puncture Status o Layers of Confinement o Closure Date o Packaging Configuration o Type and number of filters, as applicable o Liner hole presence and diameter, as applicable	Yes		
16. Have filters been installed or removed from drum as recorded in WTS, as applicable?	N/A		Not applicable for this VEB batch.
17. Hand calculations and unit conversions are correct? o Does the packaging weight plus the net weight equal the gross weight of the drum in the estimated waste material parameters, and for the unit conversions that are entered by volume or weight?	Yes		
18. Were all units and significant figures used correct for all reported volumes/weights?	Yes		
19. Has the data been reviewed for transcription errors as	Yes		

Batch Id VEB14-00100 **Open Date** 11-APR-14 **Close Date** 13-APR-14

Reviewer CRAIG SIMMONS **Approval Level** Independent Technical Reviewer
Approval Date 14-APR-14 **Review Iteration** 1

Question Text	Answer	Requirement	Comment
appropriate?			
20. Were the Visual Examination QAOs met? o Precision o Accuracy o Completeness o Comparability	Yes		
21. Is each data form signed by qualified VE Operators, as applicable per the appropriate procedure being used?	Yes		
22. Was the audio/video check satisfactory, as applicable?	N/A		Not applicable for this VEB batch.
23. Was the scale or balance check weight event satisfactory, as applicable?	N/A		Not applicable for this VEB batch.
24. Are the QC weight checks within the tolerance of the scale or balance, as applicable?	N/A		Not applicable for this VEB batch.
25. Were any NCRs generated for drums containing prohibited items or any nonconforming conditions that failed to meet DQOs or QAOs? o Include the NCRs as appropriate, in the Batch Data Report.	No		
26. Were the rework requirements clearly identified in WTS or on the BDR?	N/A		No rework was identified for this batch.

Batch Id VEB14-00100 **Open Date** 11-APR-14 **Close Date** 13-APR-14

Reviewer NICK STYHL **Approval Level** SPM Data Validation

Approval Date 14-APR-14 **Review Iteration** 1

Question Text	Answer	Requirement	Comment
(1) Has the batch received a Data Generation Level Independent Technical Review?	Yes	MP-TRUW-8.2, C3-10b(1)	
(2) Are the batch data review checklists complete?	Yes	MP-TRUW-8.2, C3-10b(1)	
(3) When identified, were PCBs, mercury, lead, or other hazardous contaminants consistent with the waste stream AK Summary Report(s) and/or AK documentation?	N/A	MP-TRUW-8.2, C4-3	None Identified.
(4) Are any ignitable, corrosive, or reactive wastes identified?	No	MP-TRUW-8.2, C4-3	
(5) Are the packaging configurations identified on the VE consistent with the waste stream AK Summary Report(s) and/or AK documentation?	Yes	MP-TRUW-8.2, C4-3	
(6) Do the drums in this batch contain typical waste items consistent with waste stream AK Summary Report(s) and/or AK documentation?	Yes	MP-TRUW-8.2, C4-3	
(7) Are the Waste Matrix Codes and physical form descriptions consistent with AK?	Yes	MP-TRUW-8.2, C4-3	
(8) Have all AK discrepancies been resolved and have all AK Resolution checklists been approved? Reference all waste stream AK documentation used in review of this data package.	N/A	MP-TRUW-8.2, C4-3	No discrepancies. MP-TRUW-05, MP-TRUW-06
(9) Does the batch report identify the correct implementing procedure number and revision number used for this testing method?	Yes	MP-TRUW-8.2, C3-4 and Table C3-11	
(10) Have the Waste Matrix Code (WMC) and IDC for all drums in the batch remained the same as originally assigned by the historical designation? NOTE: If not, note the drum number in the comment field and notify the Acceptable Knowledge Expert (AKE) if an NCR does not exist for the WMC and IDC change.	Yes	MP-TRUW-8.2, C-3c and C1-4	The IDC/WMC and summary category for newly generated waste are assigned by the operators during the VE event.
(11) Does the physical form of the waste match the WMC, waste stream description, and identify the absence of prohibited items?	Yes	MP-TRUW-8.2, C-3c and C1-4	
(12) If observable liquids exist in the drum, is an estimate of quantity given?	N/A	MP-TRUW-8.2, C-3c and C1-4	No residual liquids exist.
(13) Precision: Have all discrepancies been reconciled between the operator and the ITR with regard to identification of WMC, liquids in excess of TSDF-WAC limits, and compressed gases?	Yes	MP-TRUW-8.2 C3-4b	
(14) Accuracy: Have all operators passed a comprehensive examination and demonstrated satisfactory performance in the presence of the VE expert during initial and subsequent qualifications?	Yes	MP-TRUW-8.2 C3-4b	
(15) Completeness: Has a validated VE data form been obtained for 100% of the waste containers subject to VE?	Yes	MP-TRUW-8.2 C3-4b	
(16) Comparability: Has the comparability of VE data from different operators been enhanced by use of standardized VE procedures and operator qualifications?	Yes	MP-TRUW-8.2 C3-4b	
(17) Does the data for all containers within this batch meet the review, validation, and verification requirements? · Are proper units (e.g. Liters or pounds) and significant figure used? · Is the BDR complete (all pages identified in the BDR and numbered according)? - VE Batch Coversheet - Table of Contents (manual review only) - VE Analysis Reports - Analytical Balance Calibration Checklist (if applicable) - ITR Checklist (Form-1415)	Yes	MP-TRUW-8.2, C3-10b and Table C3-11	

Batch Id VEB14-00100 **Open Date** 11-APR-14 **Close Date** 13-APR-14

Reviewer NICK STYHL **Approval Level** SPM Data Validation

Approval Date 14-APR-14 **Review Iteration** 1

Question Text	Answer	Requirement	Comment
- Associated NCRs - Audio/Video Recordings (if applicable)			
(18) Do the drum reports contain the (a) Batch Data Report number and date, (b) waste container number (c)WMC, (d) implementing procedure and revision, (e) audio/video recording reference, (f) audio and video QC checks were performed and satisfactory, (g) verification that the physical form matches the waste stream description and WMC, (h) absence of prohibited items, (i) gross container weight, (j) waste material parameter weights, and (k) signature and date of examination (signatures of both operators when applicable)?	Yes	MP-TRUW-8.2, C1-4 and Table C3-11	Audio/Video recording and QC checks reference not applicable.
(19) Is the description of container contents detailed enough to provide verification of estimated weights for the waste matrix parameters identified?	Yes	MP-TRUW-8.2, C1-4 and Table C3-11	
(20) Is there a valid second weight check for every 10 items?	N/A	MP-TRUW-8.2, C1-4	Scales were not used during this VE event.
(21) Verification of two operator signatures when doing VE?	Yes	MP-TRUW-8.2, C-3d(1) and Table C3-11	
(22) Are there 20 or fewer containers in the batch?	Yes	MP-TRUW-8.2, C1-3 and C3-10	
(23) Review all NCRs (open and closed). Can the batch be approved?	Yes	MP-TRUW-8.2, C3-13	
(24) All data associated with this BDR is acceptable for signature release?	Yes	MP-TRUW-8.2, C3-10b and C3-10b(1)	

Batch Id VEB14-00100 **Open Date** 11-APR-14 **Close Date** 13-APR-14

Esignature History

Esig Approval ID	User ID	Esig Date	Approval Level	Comments
2732382	NSTYHL	14-APR-14	SPM	Approve batch.
2732064	CSIMMONS	14-APR-14	ITR	Promoted batch to SPM level.

AMWTP

Advanced Mixed Waste Treatment Project

AMWTP

VE Boxline and Repackaging Report

Date: 22-Sep-2014

Time: 07:44

Batch Id VEB14-00100 **Container Id** 10516344 **Analysis Id** 0000316557

VE Date 11-APR-14 00:47:33 **Analysis Status** Pass

Gen-IDC Code BN-508 AMWTP Newly Generated Debris **VE Weight** 191.84 lbs

Closure Date 11-APR-14 00:47:33 **Procedure Id** INST-FOI-17 **Net Weight** 165.84 lbs

Container Type 55 **Revision** 27

Operator 1 JOHN CUNNINGHAM **Waste Matrix** S5490 **Summary Category Group** S5000

Operator 2 JUSTIN BURTON **Equipment ID** VE BiD RPCK

General

Rigid Liner Present? No **Liner Type** NO LINER **Closure Method** No Bags

Liner Punctured? Yes **Layers Of Confinement** 0 **Fill Factor** 65 % **Liner Lid Present** No

Liquids

Liquids Present? No **Comment**

Liquid Between Liner and Drum 0 pints **Other Liquids** 0 pints

Containerized Liquid pints **Total Liquid Amount** 0 pints

Internal Container with Liquid 0 pints

Internal Container with Liquid No

Prohibited Liquids Present No

Containerized Liquid

Contents

Sharp Objects? Yes **Are Sharp Objects Protected?** No

	Value	*Comment*
Prohibited Compressed Gas Present?	No	
Explosives Present?	No	
Pyrophorics Present?	No	
Mercury Present?	No	
PCBs Present?	No	
PCB Mass (lbs)	0	
Wet Cell Batteries Present?	No	
Corrosives,Ignitables or Reactives Present?	No	
Beryllium Contaminates Present?	No	
Hazardous-Only Waste Present?	No	
Is Waste Incompatible with backfill, packaging materials, or shipping container materials?	No	
Sealed Containers Over 4L?	No	

IDC Verification

Is IDC correct? Yes **Recommended IDC** -

IDC Change Reason

Visual Exam Comment Remaining waste by weight percent is Iron-based Metals/Alloys consisting of scrap metal.

VE Boxline and Repackaging Report

Batch Id VEB14-00100 **Container Id** 10516344 **Analysis Id** 0000316557

Source Container

Is there a source container? Yes

Source Container ID	Location	IDC
10508936	destroyed @ 676- BXI/15	RF-760

IDC CODES

Current Container IDC Code: BN-508 **Recommended IDC Code:** -

Waste Material Items

Packaging Materials

Material Item	Quantity	Unit	Unit Wt	Item Wt(lbs)

Waste Items by Weight

Material Item	Quantity	Unit	Unit Wt	Item Wt(lbs)

Waste Items by Volume

Material Item	Quantity	Unit	Unit Wt	Item Wt(lbs)
Rubber	0.500	PINTS	1.554	0.780
Plastic	6.000	PINTS	0.937	5.620

Waste Parameters

Waste Parameter	Remaining Weight %	Actual Weight Lbs
Iron-based Metals/Alloys	100.000	159.435
Aluminum-based Metals/Alloys	0.000	0.000
Other metals	0.000	0.000
Other Inorganic Materials	0.000	0.000
Cellulosics	0.000	0.000
Rubber	0.000	0.780
Plastic (Waste Materials)	0.000	5.620
Inorganic matrix	0.000	0.000
Organic matrix	0.000	0.000
Soils/gravel	0.000	0.000
Steel (packaging materials)	0.000	26.000
Plastic (packaging materials)	0.000	0.000
Cellulosics Packaging	0.000	0.000
MLLW Waste	0.000	0.000

Esignature History

Esig Approval Id	User Id	E-signature Date	Comment
2730735	JCUNNINGHAM	11-APR-14 00:47:34	
2730736	JBURTON	11-APR-14 00:47:35	

Batch Id VEB14-00100 **Container Id** 10516335 **Analysis Id** 0000316558

VE Date 11-APR-14 00:52:30 **Analysis Status** Pass

Gen-IDC Code BN-508 AMWTP Newly Generated Debris **VE Weight** 147.74 lbs

Closure Date 11-APR-14 00:52:30 **Procedure Id** INST-FOI-17 **Net Weight** 121.74 lbs

Container Type 55 **Revision** 27

Operator 1 JOHN CUNNINGHAM **Waste Matrix** S5490 **Summary Category Group** S5000

Operator 2 JUSTIN BURTON **Equipment ID** VE BiD RPCK

General

Rigid Liner Present? No **Liner Type** NO LINER **Closure Method** No Bags

Liner Punctured? Yes **Layers Of Confinement** 0 **Fill Factor** 55 % **Liner Lid Present** No

Liquids

Liquids Present? No **Comment**

Liquid Between Liner and Drum 0 pints **Other Liquids** 0 pints

Containerized Liquid pints **Total Liquid Amount** 0 pints

Internal Container with Liquid 0 pints

Internal Container with Liquid No

Prohibited Liquids Present No

Containerized Liquid

Contents

Sharp Objects? Yes **Are Sharp Objects Protected?** No

	Value	*Comment*
Prohibited Compressed Gas Present?	No	
Explosives Present?	No	
Pyrophorics Present?	No	
Mercury Present?	No	
PCBs Present?	No	
PCB Mass (lbs)	0	
Wet Cell Batteries Present?	No	
Corrosives,Ignitables or Reactives Present?	No	
Beryllium Contaminates Present?	No	
Hazardous-Only Waste Present?	No	
Is Waste Incompatible with backfill, packaging materials, or shipping container materials?	No	
Sealed Containers Over 4L?	No	

IDC Verification

Is IDC correct? Yes **Recommended IDC** -

IDC Change Reason

Visual Exam Comment Remaining waste by weight percent is Iron-based Metals/Alloys consisting of scrap metal.

Batch Id VEB14-00100 **Container Id** 10516335 **Analysis Id** 0000316558

Source Container

Is there a source container? Yes

Source Container ID	Location	IDC
10508936	destroyed @ 676- BXI/15	RF-760

IDC CODES

Current Container IDC Code: BN-508 **Recommended IDC Code:** -

Waste Material Items

Packaging Materials

Material Item	Quantity	Unit	Unit Wt	Item Wt(lbs)

Waste Items by Weight

Material Item	Quantity	Unit	Unit Wt	Item Wt(lbs)

Waste Items by Volume

Material Item	Quantity	Unit	Unit Wt	Item Wt(lbs)
Rubber	1.000	PINTS	1.554	1.550
Plastic	4.000	PINTS	0.937	3.750
Floor Sweepings	1.000	PINTS	1.000	1.000

Waste Parameters

Waste Parameter	Remaining Weight %	Actual Weight Lbs
Iron-based Metals/Alloys	100.000	115.435
Aluminum-based Metals/Alloys	0.000	0.000
Other metals	0.000	0.000
Other Inorganic Materials	0.000	1.000
Cellulosics	0.000	0.000
Rubber	0.000	1.550
Plastic (Waste Materials)	0.000	3.750
Inorganic matrix	0.000	0.000
Organic matrix	0.000	0.000
Soils/gravel	0.000	0.000
Steel (packaging materials)	0.000	26.000
Plastic (packaging materials)	0.000	0.000
Cellulosics Packaging	0.000	0.000
MLLW Waste	0.000	0.000

Esignature History

Esig Approval Id	User Id	E-signature Date	Comment
2730739	JCUNNINGHAM	11-APR-14 00:52:30	
2730740	JBURTON	11-APR-14 00:52:30	

VE Boxline and Repackaging Report

Advanced Mixed Waste Treatment Project

Batch Id VEB14-00100 **Container Id** 10516314 **Analysis Id** 0000316559

VE Date 11-APR-14 01:00:54 **Analysis Status** Pass

Gen-IDC Code BN-508 AMWTP Newly Generated Debris **VE Weight** 68.36 lbs

Closure Date 11-APR-14 01:00:54 **Procedure Id** INST-FOI-17 **Net Weight** 42.36 lbs

Container Type 55 **Revision** 27

Operator 1 SHANE HIGH **Waste Matrix** S5490 **Summary Category Group** S5000

Operator 2 AARON FENN **Equipment ID** VE BiD RPCK

General

Rigid Liner Present? No **Liner Type** NO LINER **Closure Method** No Bags

Liner Punctured? Yes **Layers Of Confinement** 0 **Fill Factor** 65 % **Liner Lid Present** No

Liquids

Liquids Present? No **Comment**

Liquid Between Liner and Drum 0 pints **Other Liquids** 0 pints

Containerized Liquid pints **Total Liquid Amount** 0 pints

Internal Container with Liquid 0 pints

Internal Container with Liquid No

Prohibited Liquids Present No

Containerized Liquid

Contents

Sharp Objects? No **Are Sharp Objects Protected?** Yes

	Value	*Comment*
Prohibited Compressed Gas Present?	No	
Explosives Present?	No	
Pyrophorics Present?	No	
Mercury Present?	No	
PCBs Present?	No	
PCB Mass (lbs)	0	
Wet Cell Batteries Present?	No	
Corrosives,Ignitables or Reactives Present?	No	
Beryllium Contaminates Present?	No	
Hazardous-Only Waste Present?	No	
Is Waste incompatible with backfill, packaging materials, or shipping container materials?	No	
Sealed Containers Over 4L?	No	

IDC Verification

Is IDC correct? Yes **Recommended IDC** -

IDC Change Reason

Visual Exam Comment Waste is cellulosics consisting of wood debris.

Batch Id VEB14-00100 **Container Id** 10516314 **Analysis Id** 0000316559

---Source Container---

Is there a source container? Yes

Source Container ID	Location	IDC
10509022	destroyed @ 676- BXI/9	RF-760

---IDC CODES---

Current Container IDC Code: BN-508 **Recommended IDC Code:** -

--- Waste Material Items---

---Packaging Materials---

Material Item	Quantity	Unit	Unit Wt	Item Wt(lbs)

---Waste Items by Weight---

Material Item	Quantity	Unit	Unit Wt	Item Wt(lbs)

---Waste Items by Volume---

Material Item	Quantity	Unit	Unit Wt	Item Wt(lbs)

---Waste Parameters---

Waste Parameter	Remaining Weight %	Actual Weight Lbs
Iron-based Metals/Alloys	0.000	0.000
Aluminum-based Metals/Alloys	0.000	0.000
Other metals	0.000	0.000
Other Inorganic Materials	0.000	0.000
Cellulosics	100.000	42.355
Rubber	0.000	0.000
Plastic (Waste Materials)	0.000	0.000
Inorganic matrix	0.000	0.000
Organic matrix	0.000	0.000
Soils/gravel	0.000	0.000
Steel (packaging materials)	0.000	26.000
Plastic (packaging materials)	0.000	0.000
Cellulosics Packaging	0.000	0.000
MLLW Waste	0.000	0.000

---Esignature History---

Esig Approval Id	User Id	E-signature Date	Comment
2730743	SHIGH	11-APR-14 01:00:54	
2730744	AFENN	11-APR-14 01:00:55	

Batch Id VEB14-00100 **Container Id** 10516341 **Analysis Id** 0000316560

VE Date 11-APR-14 01:01:38 **Analysis Status** Pass

Gen-IDC Code BN-508 AMWTP Newly Generated Debris **VE Weight** 112.46 lbs

Closure Date 11-APR-14 01:01:38 **Procedure Id** INST-FOI-17 **Net Weight** 86.46 lbs

Container Type 55 **Revision** 27

Operator 1 JOHN CUNNINGHAM **Waste Matrix** S5490 **Summary Category Group** S5000

Operator 2 JUSTIN BURTON **Equipment ID** VE BiD RPCK

General

Rigid Liner Present? No **Liner Type** NO LINER **Closure Method** No Bags

Liner Punctured? Yes **Layers Of Confinement** 0 **Fill Factor** 75 % **Liner Lid Present** No

Liquids

Liquids Present? No *Comment*

Liquid Between Liner and Drum 0 pints **Other Liquids** 0 pints

Containerized Liquid pints **Total Liquid Amount** 0 pints

Internal Container with Liquid 0 pints

Internal Container with Liquid No

Prohibited Liquids Present No

Containerized Liquid

Contents

Sharp Objects? Yes **Are Sharp Objects Protected?** No

	Value	*Comment*
Prohibited Compressed Gas Present?	No	
Explosives Present?	No	
Pyrophorics Present?	No	
Mercury Present?	No	
PCBs Present?	No	
PCB Mass (lbs)	0	
Wet Cell Batteries Present?	No	
Corrosives,Ignitables or Reactives Present?	No	
Beryllium Contaminates Present?	No	
Hazardous-Only Waste Present?	No	
Is Waste Incompatible with backfill, packaging materials, or shipping container materials?	No	
Sealed Containers Over 4L?	No	

IDC Verification

Is IDC correct? Yes **Recommended IDC** -

IDC Change Reason

Visual Exam Comment Remaining waste by weight percent is Iron-based Metals/Alloys consisting of scrap metal

Batch Id VEB14-00100 Container Id 10516341 Analysis Id 0000316560

Source Container

Is there a source container? Yes

Source Container ID	Location	IDC
10508936	destroyed @ 676- BX1/15	RF-760

IDC CODES

Current Container IDC Code: BN-508 Recommended IDC Code: -

Waste Material Items

Packaging Materials

Material Item	Quantity	Unit	Unit Wt	Item Wt(lbs)

Waste Items by Weight

Material Item	Quantity	Unit	Unit Wt	Item Wt(lbs)

Waste Items by Volume

Material Item	Quantity	Unit	Unit Wt	Item Wt(lbs)
Plastic	9.000	PINTS	0.937	8.430

Waste Parameters

Waste Parameter	Remaining Weight %	Actual Weight Lbs
Iron-based Metals/Alloys	100.000	78.025
Aluminum-based Metals/Alloys	0.000	0.000
Other metals	0.000	0.000
Other Inorganic Materials	0.000	0.000
Cellulosics	0.000	0.000
Rubber	0.000	0.000
Plastic (Waste Materials)	0.000	8.430
Inorganic matrix	0.000	0.000
Organic matrix	0.000	0.000
Soils/gravel	0.000	0.000
Steel (packaging materials)	0.000	26.000
Plastic (packaging materials)	0.000	0.000
Cellulosics Packaging	0.000	0.000
MLLW Waste	0.000	0.000

Esignature History

Esig Approval Id	User Id	E-signature Date	Comment
2730745	JCUNNINGHAM	11-APR-14 01:01:38	
2730746	JBURTON	11-APR-14 01:01:38	

AMWTP
Advanced Mixed Waste Treatment Project

AMWTP

VE Boxline and Repackaging Report

Date: 22-Sep-2014

Time: 07:44

Batch Id VEB14-00100 **Container Id** 10516318 **Analysis Id** 0000316561

VE Date 11-APR-14 01:14:26 **Analysis Status** Pass

Gen-IDC Code BN-508 AMWTP Newly Generated Debris **VE Weight** 152.15 lbs

Closure Date 11-APR-14 01:14:26 **Procedure Id** INST-FOI-17 **Net Weight** 126.15 lbs

Container Type 55 **Revision** 27

Operator 1 JOHN CUNNINGHAM **Waste Matrix** S5490 **Summary Category Group** S5000

Operator 2 JUSTIN BURTON **Equipment ID** VE BiD RPCK

General

Rigid Liner Present? No **Liner Type** NO LINER **Closure Method** No Bags

Liner Punctured? Yes **Layers Of Confinement** 0 **Fill Factor** 65 % **Liner Lid Present** No

Liquids

Liquids Present? No **Comment**

Liquid Between Liner and Drum 0 pints **Other Liquids** 0 pints

Containerized Liquid pints **Total Liquid Amount** 0 pints

Internal Container with Liquid 0 pints

Internal Container with Liquid No

Prohibited Liquids Present No

Containerized Liquid

Contents

Sharp Objects? Yes **Are Sharp Objects Protected?** No

	Value	*Comment*
Prohibited Compressed Gas Present?	No	
Explosives Present?	No	
Pyrophorics Present?	No	
Mercury Present?	No	
PCBs Present?	No	
PCB Mass (lbs)	0	
Wet Cell Batteries Present?	No	
Corrosives,Ignitables or Reactives Present?	No	
Beryllium Contaminates Present?	No	
Hazardous-Only Waste Present?	No	
Is Waste Incompatible with backfill, packaging materials, or shipping container materials?	No	
Sealed Containers Over 4L?	No	

IDC Verification

Is IDC correct? Yes **Recommended IDC** -

IDC Change Reason

Visual Exam Comment Remaining waste by weight percent is Iron-based Metals/Alloys consisting of scrap metal.

Batch Id VEB14-00100 **Container Id** 10516318 **Analysis Id** 0000316561

Source Container

Is there a source container? Yes

Source Container ID	Location	IDC
10508936	destroyed @ 676- BXI/15	RF-760

IDC CODES

Current Container IDC Code: BN-508 **Recommended IDC Code:** -

Waste Material Items

Packaging Materials

Material Item	Quantity	Unit	Unit Wt	Item Wt(lbs)

Waste Items by Weight

Material Item	Quantity	Unit	Unit Wt	Item Wt(lbs)

Waste Items by Volume

Material Item	Quantity	Unit	Unit Wt	Item Wt(lbs)
Paper	1.000	PINTS	0.969	0.970
Plastic	3.000	PINTS	0.937	2.810

Waste Parameters

Waste Parameter	Remaining Weight %	Actual Weight Lbs
Iron-based Metals/Alloys	100.000	122.365
Aluminum-based Metals/Alloys	0.000	0.000
Other metals	0.000	0.000
Other Inorganic Materials	0.000	0.000
Cellulosics	0.000	0.970
Rubber	0.000	0.000
Plastic (Waste Materials)	0.000	2.810
Inorganic matrix	0.000	0.000
Organic matrix	0.000	0.000
Soils/gravel	0.000	0.000
Steel (packaging materials)	0.000	26.000
Plastic (packaging materials)	0.000	0.000
Cellulosics Packaging	0.000	0.000
MLLW Waste	0.000	0.000

Esignature History

Esig Approval Id	User Id	E-signature Date	Comment
2730747	JCUNNINGHAM	11-APR-14 01:14:26	
2730748	JBURTON	11-APR-14 01:14:26	

Batch Id VEB14-00100 **Container Id** 10516342 **Analysis Id** 0000316562

VE Date 11-APR-14 01:22:54 **Analysis Status** Pass

Gen-IDC Code BN-508 AMWTP Newly Generated Debris **VE Weight** 123.48 lbs

Closure Date 11-APR-14 01:22:54 **Procedure Id** INST-FOI-17 **Net Weight** 97.48 lbs

Container Type 55 **Revision** 27

Operator 1 JOHN CUNNINGHAM **Waste Matrix** S5490 **Summary Category Group** S5000

Operator 2 JUSTIN BURTON **Equipment ID** VE BiD RPCK

---General---

Rigid Liner Present? No **Liner Type** NO LINER **Closure Method** No Bags

Liner Punctured? Yes **Layers Of Confinement** 0 **Fill Factor** 65 % **Liner Lid Present** No

---Liquids---

Liquids Present? No **Comment**

Liquid Between Liner and Drum 0 pints **Other Liquids** 0 pints

Containerized Liquid pints **Total Liquid Amount** 0 pints

Internal Container with Liquid 0 pints

Internal Container with Liquid No

Prohibited Liquids Present No

Containerized Liquid

---Contents---

Sharp Objects? Yes **Are Sharp Objects Protected?** No

	Value	*Comment*
Prohibited Compressed Gas Present?	No	
Explosives Present?	No	
Pyrophorics Present?	No	
Mercury Present?	No	
PCBs Present?	No	
PCB Mass (lbs)	0	
Wet Cell Batteries Present?	No	
Corrosives,Ignitables or Reactives Present?	No	
Beryllium Contaminates Present?	No	
Hazardous-Only Waste Present?	No	
Is Waste Incompatible with backfill, packaging materials, or shipping container materials?	No	
Sealed Containers Over 4L?	No	

---IDC Verification---

Is IDC correct? Yes **Recommended IDC** -

IDC Change Reason

Visual Exam Comment Remaining waste by weight percent is Iron-based Metals/Alloys consisting of scrap metal.

Batch Id VEB14-00100 Container Id 10516342 Analysis Id 0000316562

Source Container

Is there a source container? Yes

Source Container ID	Location	IDC
10508936	destroyed @ 676- BXI/15	RF-760

IDC CODES

Current Container IDC Code: BN-508 Recommended IDC Code: -

Waste Material Items

Packaging Materials

Material Item	Quantity	Unit	Unit Wt	Item Wt(lbs)

Waste Items by Weight

Material Item	Quantity	Unit	Unit Wt	Item Wt(lbs)

Waste Items by Volume

Material Item	Quantity	Unit	Unit Wt	Item Wt(lbs)
Wood	1.000	PINTS	0.702	0.700
Plastic	5.000	PINTS	0.937	4.690

Waste Parameters

Waste Parameter	Remaining Weight %	Actual Weight Lbs
Iron-based Metals/Alloys	100.000	92.090
Aluminum-based Metals/Alloys	0.000	0.000
Other metals	0.000	0.000
Other Inorganic Materials	0.000	0.000
Cellulosics	0.000	0.700
Rubber	0.000	0.000
Plastic (Waste Materials)	0.000	4.690
Inorganic matrix	0.000	0.000
Organic matrix	0.000	0.000
Soils/gravel	0.000	0.000
Steel (packaging materials)	0.000	26.000
Plastic (packaging materials)	0.000	0.000
Cellulosics Packaging	0.000	0.000
MLLW Waste	0.000	0.000

Esignature History

Esig Approval Id	User Id	E-signature Date	Comment
2730753	JCUNNINGHAM	11-APR-14 01:22:54	
2730754	JBURTON	11-APR-14 01:22:56	

VE Boxline and Repackaging Report

Batch Id VEB14-00100 **Container Id** 10516346 **Analysis Id** 0000316563

VE Date 11-APR-14 01:31:49 **Analysis Status** Pass

Gen-IDC Code BN-508 AMWTP Newly Generated Debris **VE Weight** 116.87 lbs

Closure Date 11-APR-14 01:31:49 **Procedure Id** INST-FOI-17 **Net Weight** 90.87 lbs

Container Type 55 **Revision** 27

Operator 1 JOHN CUNNINGHAM **Waste Matrix** S5490 **Summary Category Group** S5000

Operator 2 JUSTIN BURTON **Equipment ID** VE BiD RPCK

General

Rigid Liner Present? No **Liner Type** NO LINER **Closure Method** No Bags

Liner Punctured? Yes **Layers Of Confinement** 0 **Fill Factor** 75 % **Liner Lid Present** No

Liquids

Liquids Present? No **Comment**

Liquid Between Liner and Drum 0 pints **Other Liquids** 0 pints

Containerized Liquid pints **Total Liquid Amount** 0 pints

Internal Container with Liquid 0 pints

Internal Container with Liquid No

Prohibited Liquids Present No

Containerized Liquid

Contents

Sharp Objects? Yes **Are Sharp Objects Protected?** No

	Value	*Comment*
Prohibited Compressed Gas Present?	No	
Explosives Present?	No	
Pyrophorics Present?	No	
Mercury Present?	No	
PCBs Present?	No	
PCB Mass (lbs)	0	
Wet Cell Batteries Present?	No	
Corrosives,Ignitables or Reactives Present?	No	
Beryllium Contaminates Present?	No	
Hazardous-Only Waste Present?	No	
Is Waste Incompatible with backfill, packaging materials, or shipping container materials?	No	
Sealed Containers Over 4L?	No	

IDC Verification

Is IDC correct? Yes **Recommended IDC** -

IDC Change Reason

Visual Exam Comment Remaining waste by weight percent is Iron-based Metals/Alloys consisting of scrap metal.

Batch Id VEB14-00100 **Container Id** 10516346 **Analysis Id** 0000316563

Source Container

Is there a source container? Yes

Source Container ID	Location	IDC
10508936	destroyed @ 676- BXI/15	RF-760

IDC CODES

Current Container IDC Code: BN-508 **Recommended IDC Code:** -

Waste Material Items

Packaging Materials

Material Item	Quantity	Unit	Unit Wt	Item Wt(lbs)

Waste Items by Weight

Material Item	Quantity	Unit	Unit Wt	Item Wt(lbs)

Waste Items by Volume

Material Item	Quantity	Unit	Unit Wt	Item Wt(lbs)
Wood	3.000	PINTS	0.702	2.110
Plastic	8.000	PINTS	0.937	7.500

Waste Parameters

Waste Parameter	Remaining Weight %	Actual Weight Lbs
Iron-based Metals/Alloys	100.000	81.255
Aluminum-based Metals/Alloys	0.000	0.000
Other metals	0.000	0.000
Other Inorganic Materials	0.000	0.000
Cellulosics	0.000	2.110
Rubber	0.000	0.000
Plastic (Waste Materials)	0.000	7.500
Inorganic matrix	0.000	0.000
Organic matrix	0.000	0.000
Soils/gravel	0.000	0.000
Steel (packaging materials)	0.000	26.000
Plastic (packaging materials)	0.000	0.000
Cellulosics Packaging	0.000	0.000
MLLW Waste	0.000	0.000

Esignature History

Esig Approval Id	User Id	E-signature Date	Comment
2730766	JCUNNINGHAM	11-APR-14 01:31:50	
2730767	JBURTON	11-APR-14 01:31:51	

VE Boxline and Repackaging Report

Batch Id VEB14-00100 **Container Id** 10516324 **Analysis Id** 0000316564

VE Date 11-APR-14 01:39:43 **Analysis Status** Pass

Gen-IDC Code BN-508 AMWTP Newly Generated Debris **VE Weight** 209.48 lbs

Closure Date 11-APR-14 01:39:43 **Procedure Id** INST-FOI-17 **Net Weight** 183.48 lbs

Container Type 55 **Revision** 27

Operator 1 JOHN CUNNINGHAM **Waste Matrix** S5490 **Summary Category Group** S5000

Operator 2 JUSTIN BURTON **Equipment ID** VE BiD RPCK

General

Rigid Liner Present? No **Liner Type** NO LINER **Closure Method** No Bags

Liner Punctured? Yes **Layers Of Confinement** 0 **Fill Factor** 65 % **Liner Lid Present** No

Liquids

Liquids Present? No **Comment**

Liquid Between Liner and Drum 0 pints **Other Liquids** 0 pints

Containerized Liquid pints **Total Liquid Amount** 0 pints

Internal Container with Liquid 0 pints

Internal Container with Liquid No

Prohibited Liquids Present No

Containerized Liquid

Contents

Sharp Objects? Yes **Are Sharp Objects Protected?** No

	Value	*Comment*
Prohibited Compressed Gas Present?	No	
Explosives Present?	No	
Pyrophorics Present?	No	
Mercury Present?	No	
PCBs Present?	No	
PCB Mass (lbs)	0	
Wet Cell Batteries Present?	No	
Corrosives,Ignitables or Reactives Present?	No	
Beryllium Contaminates Present?	No	
Hazardous-Only Waste Present?	No	
Is Waste Incompatible with backfill, packaging materials, or shipping container materials?	No	
Sealed Containers Over 4L?	No	

IDC Verification

Is IDC correct? Yes **Recommended IDC** -

IDC Change Reason

Visual Exam Comment Remaining waste by weight percent is Iron-based Metals/Alloys consisting of scrap metal.

Batch Id VEB14-00100 **Container Id** 10516324 **Analysis Id** 0000316564

Source Container

Is there a source container? Yes

Source Container ID	Location	IDC
10508936	destroyed @ 676- BXI/15	RF-760

IDC CODES

Current Container IDC Code: BN-508 **Recommended IDC Code:** -

Waste Material Items

Packaging Materials

Material Item	Quantity	Unit	Unit Wt	Item Wt(lbs)

Waste Items by Weight

Material Item	Quantity	Unit	Unit Wt	Item Wt(lbs)

Waste Items by Volume

Material Item	Quantity	Unit	Unit Wt	Item Wt(lbs)
Paper	1.000	PINTS	0.969	0.970
Rubber	2.000	PINTS	1.554	3.110
Wood	1.000	PINTS	0.702	0.700
Plastic	6.000	PINTS	0.937	5.620

Waste Parameters

Waste Parameter	Remaining Weight %	Actual Weight Lbs
Iron-based Metals/Alloys	100.000	173.075
Aluminum-based Metals/Alloys	0.000	0.000
Other metals	0.000	0.000
Other Inorganic Materials	0.000	0.000
Cellulosics	0.000	1.670
Rubber	0.000	3.110
Plastic (Waste Materials)	0.000	5.620
Inorganic matrix	0.000	0.000
Organic matrix	0.000	0.000
Soils/gravel	0.000	0.000
Steel (packaging materials)	0.000	26.000
Plastic (packaging materials)	0.000	0.000
Cellulosics Packaging	0.000	0.000
MLLW Waste	0.000	0.000

Esignature History

Esig Approval Id	User Id	E-signature Date	Comment
2730769	JCUNNINGHAM	11-APR-14 01:39:43	
2730770	JBURTON	11-APR-14 01:39:45	

AMWTP

Advanced Mixed Waste Treatment Project

AMWTP

VE Boxline and Repackaging Report

Date: 22-Sep-2014

Time: 07:44

Batch Id VEB14-00100 **Container Id** 10516316 **Analysis Id** 0000316565

VE Date 11-APR-14 01:44:23 **Analysis Status** Pass

Gen-IDC Code BN-508 AMWTP Newly Generated Debris **VE Weight** 194.04 lbs

Closure Date 11-APR-14 01:44:23 **Procedure Id** INST-FOI-17 **Net Weight** 168.04 lbs

Container Type 55 **Revision** 27

Operator 1 JOHN CUNNINGHAM **Waste Matrix** S5490 **Summary Category Group** S5000

Operator 2 JUSTIN BURTON **Equipment ID** VE BiD RPCK

General

Rigid Liner Present? No **Liner Type** NO LINER **Closure Method** No Bags

Liner Punctured? Yes **Layers Of Confinement** 0 **Fill Factor** 65 % **Liner Lid Present** No

Liquids

Liquids Present? No **Comment**

Liquid Between Liner and Drum 0 pints **Other Liquids** 0 pints

Containerized Liquid pints **Total Liquid Amount** 0 pints

Internal Container with Liquid 0 pints

Internal Container with Liquid No

Prohibited Liquids Present No

Containerized Liquid

Contents

Sharp Objects? Yes **Are Sharp Objects Protected?** No

	Value	*Comment*
Prohibited Compressed Gas Present?	No	
Explosives Present?	No	
Pyrophorics Present?	No	
Mercury Present?	No	
PCBs Present?	No	
PCB Mass (lbs)	0	
Wet Cell Batteries Present?	No	
Corrosives,Ignitables or Reactives Present?	No	
Beryllium Contaminates Present?	No	
Hazardous-Only Waste Present?	No	
Is Waste Incompatible with backfill, packaging materials, or shipping container materials?	No	
Sealed Containers Over 4L?	No	

IDC Verification

Is IDC correct? Yes **Recommended IDC** -

IDC Change Reason

Visual Exam Comment Remaining waste by weight percent is Iron-based Metals/Alloys consisting of scrap metal.

Batch Id VEB14-00100 **Container Id** 10516316 **Analysis Id** 0000316565

Source Container

Is there a source container? Yes

Source Container ID	Location	IDC
10508936	destroyed @ 676- BXI/15	RF-760

IDC CODES

Current Container IDC Code: BN-508 **Recommended IDC Code:** -

Waste Material Items

Packaging Materials

Material Item	Quantity	Unit	Unit Wt	Item Wt(lbs)

Waste Items by Weight

Material Item	Quantity	Unit	Unit Wt	Item Wt(lbs)

Waste Items by Volume

Material Item	Quantity	Unit	Unit Wt	Item Wt(lbs)
Paper	1.000	PINTS	0.969	0.970
Plastic	3.000	PINTS	0.937	2.810

Waste Parameters

Waste Parameter	Remaining Weight %	Actual Weight Lbs
Iron-based Metals/Alloys	100.000	164.260
Aluminum-based Metals/Alloys	0.000	0.000
Other metals	0.000	0.000
Other Inorganic Materials	0.000	0.000
Cellulosics	0.000	0.970
Rubber	0.000	0.000
Plastic (Waste Materials)	0.000	2.810
Inorganic matrix	0.000	0.000
Organic matrix	0.000	0.000
Soils/gravel	0.000	0.000
Steel (packaging materials)	0.000	26.000
Plastic (packaging materials)	0.000	0.000
Cellulosics Packaging	0.000	0.000
MLLW Waste	0.000	0.000

Esignature History

Esig Approval Id	User Id	E-signature Date	Comment
2730771	JCUNNINGHAM	11-APR-14 01:44:24	
2730772	JBURTON	11-APR-14 01:44:25	

Batch Id VEB14-00100 Container Id 10516330 Analysis Id 0000316567

VE Date 13-APR-14 20:50:44 Analysis Status Pass

Gen-IDC Code BN-508 AMWTP Newly Generated Debris VE Weight 63.95 lbs

Closure Date 13-APR-14 20:50:44 Procedure Id INST-FOI-17 Net Weight 37.95 lbs

Container Type 55 Revision 27

Operator 1 REX BUSH Waste Matrix S5490 Summary Category Group S5000

Operator 2 TIM OZBURN Equipment ID VE BiD RPCK

General

Rigid Liner Present? No Liner Type NO LINER Closure Method No Bags

Liner Punctured? Yes Layers Of Confinement 0 Fill Factor 60 % Liner Lid Present No

Liquids

Liquids Present? No Comment

Liquid Between Liner and Drum 0 pints Other Liquids 0 pints

Containerized Liquid pints Total Liquid Amount 0 pints

Internal Container with Liquid 0 pints

Internal Container with Liquid No

Prohibited Liquids Present No

Containerized Liquid

Contents

Sharp Objects? Yes Are Sharp Objects Protected? No

	Value	*Comment*
Prohibited Compressed Gas Present?	No	
Explosives Present?	No	
Pyrophorics Present?	No	
Mercury Present?	No	
PCBs Present?	No	
PCB Mass (lbs)	0	
Wet Cell Batteries Present?	No	
Corrosives,Ignitables or Reactives Present?	No	
Beryllium Contaminates Present?	No	
Hazardous-Only Waste Present?	No	
Is Waste Incompatible with backfill, packaging materials, or shipping container materials?	No	
Sealed Containers Over 4L?	No	

IDC Verification

Is IDC correct? Yes Recommended IDC -

IDC Change Reason

Visual Exam Comment Remaining waste by weight percent is plastic (Waste Materials) consisting of bags, sheeting, PPE, and tape.

Batch Id VEB14-00100 **Container Id** 10516330 **Analysis Id** 0000316567

Source Container

Is there a source container? Yes

Source Container ID	Location	IDC
10508936	destroyed @ 676- BXI/15	RF-760

IDC CODES

Current Container IDC Code: BN-508 **Recommended IDC Code:** -

Waste Material Items

Packaging Materials

Material Item	Quantity	Unit	Unit Wt	Item Wt(lbs)

Waste Items by Weight

Material Item	Quantity	Unit	Unit Wt	Item Wt(lbs)

Waste Items by Volume

Material Item	Quantity	Unit	Unit Wt	Item Wt(lbs)
Paper	1.000	PINTS	0.969	0.970
Wood	1.000	PINTS	0.702	0.700
Iron	0.500	PINTS	7.807	3.900
Floor Sweepings	1.000	PINTS	1.000	1.000

Waste Parameters

Waste Parameter	Remaining Weight %	Actual Weight Lbs
Iron-based Metals/Alloys	0.000	3.900
Aluminum-based Metals/Alloys	0.000	0.000
Other metals	0.000	0.000
Other Inorganic Materials	0.000	1.000
Cellulosics	0.000	1.670
Rubber	0.000	0.000
Plastic (Waste Materials)	100.000	31.375
Inorganic matrix	0.000	0.000
Organic matrix	0.000	0.000
Soils/gravel	0.000	0.000
Steel (packaging materials)	0.000	26.000
Plastic (packaging materials)	0.000	0.000
Cellulosics Packaging	0.000	0.000
MLLW Waste	0.000	0.000

Esignature History

Esig Approval Id	User Id	E-signature Date	Comment
2731871	RBUSH1	13-APR-14 20:50:45	
2731872	TOZBURN	13-APR-14 20:50:47	

Batch Id VEB14-00100 **Container Id** 10516334 **Analysis Id** 0000316569

VE Date 13-APR-14 21:04:32 **Analysis Status** Pass

Gen-IDC Code BN-508 AMWTP Newly Generated Debris **VE Weight** 103.64 lbs

Closure Date 13-APR-14 21:04:32 **Procedure Id** INST-FOI-17 **Net Weight** 77.64 lbs

Container Type 55 **Revision** 27

Operator 1 REX BUSH **Waste Matrix** S5490 **Summary Category Group** S5000

Operator 2 TIM OZBURN **Equipment ID** VE BiD RPCK

General

Rigid Liner Present? No **Liner Type** NO LINER **Closure Method** No Bags

Liner Punctured? Yes **Layers Of Confinement** 0 **Fill Factor** 58 % **Liner Lid Present** No

Liquids

Liquids Present? No **Comment**

Liquid Between Liner and Drum 0 pints **Other Liquids** 0 pints

Containerized Liquid pints **Total Liquid Amount** 0 pints

Internal Container with Liquid 0 pints

Internal Container with Liquid No

Prohibited Liquids Present No

Containerized Liquid

Contents

Sharp Objects? Yes **Are Sharp Objects Protected?** No

	Value	*Comment*
Prohibited Compressed Gas Present?	No	
Explosives Present?	No	
Pyrophorics Present?	No	
Mercury Present?	No	
PCBs Present?	No	
PCB Mass (lbs)	0	
Wet Cell Batteries Present?	No	
Corrosives,Ignitables or Reactives Present?	No	
Beryllium Contaminates Present?	No	
Hazardous-Only Waste Present?	No	
Is Waste Incompatible with backfill, packaging materials, or shipping container materials?	No	
Sealed Containers Over 4L?	No	

IDC Verification

Is IDC correct? Yes **Recommended IDC** -

IDC Change Reason

Visual Exam Comment Remaining waste by weight percent is plastic (Waste Materials) consisting of bags, sheeting, PPE, airhose, and tape.

Batch Id VEB14-00100 Container Id 10516334 Analysis Id 0000316569

Source Container

Is there a source container? Yes

Source Container ID	Location	IDC
10508936	destroyed @ 676- BXI/15	RF-760

IDC CODES

Current Container IDC Code: BN-508 Recommended IDC Code: -

Waste Material Items

Packaging Materials

Material Item	Quantity	Unit	Unit Wt	Item Wt(lbs)

Waste Items by Weight

Material Item	Quantity	Unit	Unit Wt	Item Wt(lbs)

Waste Items by Volume

Material Item	Quantity	Unit	Unit Wt	Item Wt(lbs)
Rubber	1.000	PINTS	1.554	1.550
Iron	0.500	PINTS	7.807	3.900

Waste Parameters

Waste Parameter	Remaining Weight %	Actual Weight Lbs
Iron-based Metals/Alloys	0.000	3.900
Aluminum-based Metals/Alloys	0.000	0.000
Other metals	0.000	0.000
Other Inorganic Materials	0.000	0.000
Cellulosics	0.000	0.000
Rubber	0.000	1.550
Plastic (Waste Materials)	100.000	72.185
Inorganic matrix	0.000	0.000
Organic matrix	0.000	0.000
Soils/gravel	0.000	0.000
Steel (packaging materials)	0.000	26.000
Plastic (packaging materials)	0.000	0.000
Cellulosics Packaging	0.000	0.000
MLLW Waste	0.000	0.000

Esignature History

Esig Approval Id	User Id	E-signature Date	Comment
2731876	RBUSH1	13-APR-14 21:04:33	
2731877	TOZBURN	13-APR-14 21:04:34	

Batch Id VEB14-00100 **Container Id** 10516322 **Analysis Id** 0000316571

VE Date 13-APR-14 21:30:53 **Analysis Status** Pass

Gen-IDC Code BN-508 AMWTP Newly Generated Debris **VE Weight** 105.84 lbs

Closure Date 13-APR-14 21:30:53 **Procedure Id** INST-FOI-17 **Net Weight** 79.84 lbs

Container Type 55 **Revision** 27

Operator 1 REX BUSH **Waste Matrix** S5490 **Summary Category Group** S5000

Operator 2 TIM OZBURN **Equipment ID** VE BiD RPCK

General

Rigid Liner Present? No **Liner Type** NO LINER **Closure Method** No Bags

Liner Punctured? Yes **Layers Of Confinement** 0 **Fill Factor** 55 % **Liner Lid Present** No

Liquids

Liquids Present? No **Comment**

Liquid Between Liner and Drum 0 pints **Other Liquids** 0 pints

Containerized Liquid pints **Total Liquid Amount** 0 pints

Internal Container with Liquid 0 pints

Internal Container with Liquid No

Prohibited Liquids Present No

Containerized Liquid

Contents

Sharp Objects? Yes **Are Sharp Objects Protected?** No

	Value	*Comment*
Prohibited Compressed Gas Present?	No	
Explosives Present?	No	
Pyrophorics Present?	No	
Mercury Present?	No	
PCBs Present?	No	
PCB Mass (lbs)	0	
Wet Cell Batteries Present?	No	
Corrosives,Ignitables or Reactives Present?	No	
Beryllium Contaminates Present?	No	
Hazardous-Only Waste Present?	No	
Is Waste Incompatible with backfill, packaging materials, or shipping container materials?	No	
Sealed Containers Over 4L?	No	

IDC Verification

Is IDC correct? Yes **Recommended IDC** -

IDC Change Reason

Visual Exam Comment Remaining waste by weight percent is plastic (Waste Materials) consisting of bags, PPE, sheeting and tape.

Batch Id VEB14-00100 **Container Id** 10516322 **Analysis Id** 0000316571

Source Container

Is there a source container? Yes

Source Container ID	Location	IDC
10508936	destroyed @ 676- BXI/15	RF-760

IDC CODES

Current Container IDC Code: BN-508 **Recommended IDC Code:** -

Waste Material Items

Packaging Materials

Material Item	Quantity	Unit	Unit Wt	Item Wt(lbs)

Waste Items by Weight

Material Item	Quantity	Unit	Unit Wt	Item Wt(lbs)

Waste Items by Volume

Material Item	Quantity	Unit	Unit Wt	Item Wt(lbs)
Rubber	1.000	PINTS	1.554	1.550
Iron	0.500	PINTS	7.807	3.900

Waste Parameters

Waste Parameter	Remaining Weight %	Actual Weight Lbs
Iron-based Metals/Alloys	0.000	3.900
Aluminum-based Metals/Alloys	0.000	0.000
Other metals	0.000	0.000
Other Inorganic Materials	0.000	0.000
Cellulosics	0.000	0.000
Rubber	0.000	1.550
Plastic (Waste Materials)	100.000	74.390
Inorganic matrix	0.000	0.000
Organic matrix	0.000	0.000
Soils/gravel	0.000	0.000
Steel (packaging materials)	0.000	26.000
Plastic (packaging materials)	0.000	0.000
Cellulosics Packaging	0.000	0.000
MLLW Waste	0.000	0.000

Esignature History

Esig Approval Id	User Id	E-signature Date	Comment
2731883	RBUSH1	13-APR-14 21:30:54	
2731884	TOZBURN	13-APR-14 21:30:58	

Batch Id VEB14-00100 **Container Id** 10516343 **Analysis Id** 0000316574

VE Date 13-APR-14 21:55:27 **Analysis Status** Pass

Gen-IDC Code BN-508 AMWTP Newly Generated Debris **VE Weight** 81.59 lbs

Closure Date 13-APR-14 21:55:27 **Procedure Id** INST-FOI-17 **Net Weight** 55.59 lbs

Container Type 55 **Revision** 27

Operator 1 SHIRLEY PEREZ **Waste Matrix** S5490 **Summary Category Group** S5000

Operator 2 GUY MATLOCK **Equipment ID** VE BiD RPCK

---General---

Rigid Liner Present? No **Liner Type** NO LINER **Closure Method** No Bags

Liner Punctured? Yes **Layers Of Confinement** 0 **Fill Factor** 65 % **Liner Lid Present** No

---Liquids---

Liquids Present? No **Comment**

Liquid Between Liner and Drum 0 pints **Other Liquids** 0 pints

Containerized Liquid pints **Total Liquid Amount** 0 pints

Internal Container with Liquid 0 pints

Internal Container with Liquid No

Prohibited Liquids Present No

Containerized Liquid

---Contents---

Sharp Objects? No **Are Sharp Objects Protected?** Yes

	Value	*Comment*
Prohibited Compressed Gas Present?	No	
Explosives Present?	No	
Pyrophorics Present?	No	
Mercury Present?	No	
PCBs Present?	No	
PCB Mass (lbs)	0	
Wet Cell Batteries Present?	No	
Corrosives,Ignitables or Reactives Present?	No	
Beryllium Contaminates Present?	No	
Hazardous-Only Waste Present?	No	
Is Waste Incompatible with backfill, packaging materials, or shipping container materials?	No	
Sealed Containers Over 4L?	No	

---IDC Verification---

Is IDC correct? Yes **Recommended IDC** -

IDC Change Reason

Visual Exam Comment The remaining waste by weight percent is Plastic consisting of Bags ,sheeting and tape.

Batch Id VEB14-00100 **Container Id** 10516343 **Analysis Id** 0000316574

Source Container

Is there a source container? Yes

Source Container ID	Location	IDC
10509022	destroyed @ 676- BX1/9	RF-760

IDC CODES

Current Container IDC Code: BN-508 **Recommended IDC Code:** -

Waste Material Items

Packaging Materials

Material Item	Quantity	Unit	Unit Wt	Item Wt(lbs)

Waste Items by Weight

Material Item	Quantity	Unit	Unit Wt	Item Wt(lbs)

Waste Items by Volume

Material Item	Quantity	Unit	Unit Wt	Item Wt(lbs)
Paper	2.000	PINTS	0.969	1.940
Wood	7.000	PINTS	0.702	4.910

Waste Parameters

Waste Parameter	Remaining Weight %	Actual Weight Lbs
Iron-based Metals/Alloys	0.000	0.000
Aluminum-based Metals/Alloys	0.000	0.000
Other metals	0.000	0.000
Other Inorganic Materials	0.000	0.000
Cellulosics	0.000	6.850
Rubber	0.000	0.000
Plastic (Waste Materials)	100.000	48.735
Inorganic matrix	0.000	0.000
Organic matrix	0.000	0.000
Soils/gravel	0.000	0.000
Steel (packaging materials)	0.000	26.000
Plastic (packaging materials)	0.000	0.000
Cellulosics Packaging	0.000	0.000
MLLW Waste	0.000	0.000

Esignature History

Esig Approval Id	User Id	E-signature Date	Comment
2731889	SPEREZ	13-APR-14 21:55:27	
2731890	GMATLOCK	13-APR-14 21:55:29	

AMWTP
Advanced Mixed Waste Treatment Project

AMWTP

VE Boxline and Repackaging Report

Date: 22-Sep-2014
Time: 07:44

Batch Id VEB14-00100 **Container Id** 10516284 **Analysis Id** 0000316575

VE Date 13-APR-14 22:00:58 **Analysis Status** Pass
Gen-IDC Code BN-508 AMWTP Newly Generated Debris
Closure Date 13-APR-14 22:00:58
Container Type 55
Operator 1 REX BUSH
Operator 2 TIM OZBURN
Procedure Id INST-FOI-17
Revision 27
Waste Matrix S5490
Equipment ID VE BID RPCK
VE Weight 105.84 lbs
Net Weight 79.84 lbs
Summary Category Group S5000

General

Rigid Liner Present? No **Liner Type** NO LINER **Closure Method** No Bags
Liner Punctured? Yes **Layers Of Confinement** 0 **Fill Factor** 52 % **Liner Lid Present** No

Liquids

Liquids Present? No **Comment**

Liquid Between Liner and Drum 0 pints
Containerized Liquid pints
Internal Container with Liquid 0 pints
Other Liquids 0 pints
Total Liquid Amount 0 pints

Internal Container with Liquid No

Prohibited Liquids Present No

Containerized Liquid

Contents

Sharp Objects? Yes **Are Sharp Objects Protected?** No

	Value	*Comment*
Prohibited Compressed Gas Present?	No	
Explosives Present?	No	
Pyrophorics Present?	No	
Mercury Present?	No	
PCBs Present?	No	
PCB Mass (lbs)	0	
Wet Cell Batteries Present?	No	
Corrosives,Ignitables or Reactives Present?	No	
Beryllium Contaminates Present?	No	
Hazardous-Only Waste Present?	No	
Is Waste Incompatible with backfill, packaging materials, or shipping container materials?	No	
Sealed Containers Over 4L?	No	

IDC Verification

Is IDC correct? Yes **Recommended IDC** -
IDC Change Reason

Visual Exam Comment Remaining waste by weight percent is Aluminum-based metal alloys consisting of scrap aluminum.

Batch Id VEB14-00100 **Container Id** 10516284 **Analysis Id** 0000316575

Source Container

Is there a source container? Yes

Source Container ID	Location	IDC
10508936	destroyed @ 676- BXI/15	RF-760

IDC CODES

Current Container IDC Code: BN-508 **Recommended IDC Code:** -

Waste Material Items

Packaging Materials

Material Item	Quantity	Unit	Unit Wt	Item Wt(lbs)

Waste Items by Weight

Material Item	Quantity	Unit	Unit Wt	Item Wt(lbs)

Waste Items by Volume

Material Item	Quantity	Unit	Unit Wt	Item Wt(lbs)
Paper	1.000	PINTS	0.969	0.970
Rubber	1.000	PINTS	1.554	1.550
Iron	1.000	PINTS	7.807	7.810
Plastic	2.000	PINTS	0.937	1.870

Waste Parameters

Waste Parameter	Remaining Weight %	Actual Weight Lbs
Iron-based Metals/Alloys	0.000	7.810
Aluminum-based Metals/Alloys	100.000	67.640
Other metals	0.000	0.000
Other Inorganic Materials	0.000	0.000
Cellulosics	0.000	0.970
Rubber	0.000	1.550
Plastic (Waste Materials)	0.000	1.870
Inorganic matrix	0.000	0.000
Organic matrix	0.000	0.000
Soils/gravel	0.000	0.000
Steel (packaging materials)	0.000	26.000
Plastic (packaging materials)	0.000	0.000
Cellulosics Packaging	0.000	0.000
MLLW Waste	0.000	0.000

Esignature History

Esig Approval Id	User Id	E-signature Date	Comment
2731891	RBUSH1	13-APR-14 22:00:58	
2731892	TOZBURN	13-APR-14 22:01:01	

Batch Id VEB14-00100 **Container Id** 10516345 **Analysis Id** 0000316576

VE Date 13-APR-14 22:20:56 **Analysis Status** Pass

Gen-IDC Code BN-508 AMWTP Newly Generated Debris **VE Weight** 108.05 lbs

Closure Date 13-APR-14 22:20:56 **Procedure Id** INST-FOI-17 **Net Weight** 82.05 lbs

Container Type 55 **Revision** 27

Operator 1 SHIRLEY PEREZ **Waste Matrix** S5490 **Summary Category Group** S5000

Operator 2 GUY MATLOCK **Equipment ID** VE BiD RPCK

General

Rigid Liner Present? No **Liner Type** NO LINER **Closure Method** No Bags

Liner Punctured? Yes **Layers Of Confinement** 0 **Fill Factor** 60 % **Liner Lid Present** No

Liquids

Liquids Present? No **Comment**

Liquid Between Liner and Drum 0 pints **Other Liquids** 0 pints

Containerized Liquid pints **Total Liquid Amount** 0 pints

Internal Container with Liquid 0 pints

Internal Container with Liquid No

Prohibited Liquids Present No

Containerized Liquid

Contents

Sharp Objects? No **Are Sharp Objects Protected?** Yes

	Value	Comment
Prohibited Compressed Gas Present?	No	
Explosives Present?	No	
Pyrophorics Present?	No	
Mercury Present?	No	
PCBs Present?	No	
PCB Mass (lbs)	0	
Wet Cell Batteries Present?	No	
Corrosives,Ignitables or Reactives Present?	No	
Beryllium Contaminates Present?	No	
Hazardous-Only Waste Present?	No	
Is Waste Incompatible with backfill, packaging materials, or shipping container materials?	No	
Sealed Containers Over 4L?	No	

IDC Verification

Is IDC correct? Yes **Recommended IDC** -

IDC Change Reason

Visual Exam Comment The remaining waste by weight percent is Cellulosics consisting of Wood ,paper.

Batch Id VEB14-00100 Container Id 10516345 Analysis Id 0000316576

Source Container

Is there a source container? Yes

Source Container ID	Location	IDC
10509022	destroyed @ 676- BXI/9	RF-760

IDC CODES

Current Container IDC Code: BN-508 Recommended IDC Code: -

Waste Material Items

Packaging Materials

Material Item	Quantity	Unit	Unit Wt	Item Wt(lbs)

Waste Items by Weight

Material Item	Quantity	Unit	Unit Wt	Item Wt(lbs)

Waste Items by Volume

Material Item	Quantity	Unit	Unit Wt	Item Wt(lbs)
Plastic	2.000	PINTS	0.937	1.870

Waste Parameters

Waste Parameter	Remaining Weight %	Actual Weight Lbs
Iron-based Metals/Alloys	0.000	0.000
Aluminum-based Metals/Alloys	0.000	0.000
Other metals	0.000	0.000
Other Inorganic Materials	0.000	0.000
Cellulosics	100.000	80.175
Rubber	0.000	0.000
Plastic (Waste Materials)	0.000	1.870
Inorganic matrix	0.000	0.000
Organic matrix	0.000	0.000
Soils/gravel	0.000	0.000
Steel (packaging materials)	0.000	26.000
Plastic (packaging materials)	0.000	0.000
Cellulosics Packaging	0.000	0.000
MLLW Waste	0.000	0.000

Esignature History

Esig Approval Id	User Id	E-signature Date	Comment
2731895	SPEREZ	13-APR-14 22:20:56	
2731896	GMATLOCK	13-APR-14 22:20:57	

AMWTP

Advanced Mixed Waste Treatment Project

AMWTP

VE Boxline and Repackaging Report

Date: 22-Sep-2014

Time: 07:44

Batch Id VEB14-00100 **Container Id** 10516287 **Analysis Id** 0000316577

VE Date 13-APR-14 22:20:33 **Analysis Status** Pass

Gen-IDC Code BN-508 AMWTP Newly Generated Debris **VE Weight** 81.59 lbs

Closure Date 13-APR-14 22:20:33 **Procedure Id** INST-FOI-17 **Net Weight** 55.59 lbs

Container Type 55 **Revision** 27

Operator 1 REX BUSH **Waste Matrix** S5490 **Summary Category Group** S5000

Operator 2 TIM OZBURN **Equipment ID** VE BiD RPCK

General

Rigid Liner Present? No **Liner Type** NO LINER **Closure Method** No Bags

Liner Punctured? Yes **Layers Of Confinement** 0 **Fill Factor** 58 % **Liner Lid Present** No

Liquids

Liquids Present? No **Comment**

Liquid Between Liner and Drum 0 pints **Other Liquids** 0 pints

Containerized Liquid pints **Total Liquid Amount** 0 pints

Internal Container with Liquid 0 pints

Internal Container with Liquid No

Prohibited Liquids Present No

Containerized Liquid

Contents

Sharp Objects? Yes **Are Sharp Objects Protected?** No

	Value	*Comment*
Prohibited Compressed Gas Present?	No	
Explosives Present?	No	
Pyrophorics Present?	No	
Mercury Present?	No	
PCBs Present?	No	
PCB Mass (lbs)	0	
Wet Cell Batteries Present?	No	
Corrosives,Ignitables or Reactives Present?	No	
Beryllium Contaminates Present?	No	
Hazardous-Only Waste Present?	No	
Is Waste Incompatible with backfill, packaging materials, or shipping container materials?	No	
Sealed Containers Over 4L?	No	

IDC Verification

Is IDC correct? Yes **Recommended IDC** -

IDC Change Reason

Visual Exam Comment Remaining waste by weight percent is Aluminum-based metal alloys consisting of aluminum debris.

AMWTP

Advanced Mixed Waste Treatment Project

AMWTP

VE Boxline and Repackaging Report

Date: 22-Sep-2014

Time: 07:44

Batch Id VEB14-00100 **Container Id** 10516287 **Analysis Id** 0000316577

Source Container

Is there a source container? Yes

Source Container ID	Location	IDC
10508936	destroyed @ 676- BXI/15	RF-760

IDC CODES

Current Container IDC Code: BN-508 **Recommended IDC Code:** -

Waste Material Items

Packaging Materials

Material Item	Quantity	Unit	Unit Wt	Item Wt(lbs)

Waste Items by Weight

Material Item	Quantity	Unit	Unit Wt	Item Wt(lbs)

Waste Items by Volume

Material Item	Quantity	Unit	Unit Wt	Item Wt(lbs)
Paper	1.000	PINTS	0.969	0.970
Rubber	1.000	PINTS	1.554	1.550
Iron	0.500	PINTS	7.807	3.900
Plastic	2.000	PINTS	0.937	1.870

Waste Parameters

Waste Parameter	Remaining Weight %	Actual Weight Lbs
Iron-based Metals/Alloys	0.000	3.900
Aluminum-based Metals/Alloys	100.000	47.295
Other metals	0.000	0.000
Other Inorganic Materials	0.000	0.000
Cellulosics	0.000	0.970
Rubber	0.000	1.550
Plastic (Waste Materials)	0.000	1.870
Inorganic matrix	0.000	0.000
Organic matrix	0.000	0.000
Soils/gravel	0.000	0.000
Steel (packaging materials)	0.000	26.000
Plastic (packaging materials)	0.000	0.000
Cellulosics Packaging	0.000	0.000
MLLW Waste	0.000	0.000

Esignature History

Esig Approval Id	User Id	E-signature Date	Comment
2731893	RBUSH1	13-APR-14 22:20:34	
2731894	TOZBURN	13-APR-14 22:20:36	

AMWTP

Advanced Mixed Waste Treatment Project

AMWTP

VE Boxline and Repackaging Report

Date: 22-Sep-2014

Time: 07:44

Batch Id VEB14-00100 **Container Id** 10516319 **Analysis Id** 0000316578

VE Date 13-APR-14 22:35:30 **Analysis Status** Pass

Gen-IDC Code BN-508 AMWTP Newly Generated Debris **VE Weight** 141.12 lbs

Closure Date 13-APR-14 22:35:30 **Procedure Id** INST-FOI-17 **Net Weight** 115.12 lbs

Container Type 55 **Revision** 27

Operator 1 SHIRLEY PEREZ **Waste Matrix** S5490 **Summary Category Group** S5000

Operator 2 GUY MATLOCK **Equipment ID** VE BiD RPCK

General

Rigid Liner Present? No **Liner Type** NO LINER **Closure Method** No Bags

Liner Punctured? Yes **Layers Of Confinement** 0 **Fill Factor** 55 % **Liner Lid Present** No

Liquids

Liquids Present? No **Comment**

Liquid Between Liner and Drum 0 pints **Other Liquids** 0 pints

Containerized Liquid pints **Total Liquid Amount** 0 pints

Internal Container with Liquid 0 pints

Internal Container with Liquid No

Prohibited Liquids Present No

Containerized Liquid

Contents

Sharp Objects? Yes **Are Sharp Objects Protected?** No

	Value	Comment
Prohibited Compressed Gas Present?	No	
Explosives Present?	No	
Pyrophorics Present?	No	
Mercury Present?	No	
PCBs Present?	No	
PCB Mass (lbs)	0	
Wet Cell Batteries Present?	No	
Corrosives,Ignitables or Reactives Present?	No	
Beryllium Contaminates Present?	No	
Hazardous-Only Waste Present?	No	
Is Waste Incompatible with backfill, packaging materials, or shipping container materials?	No	
Sealed Containers Over 4L?	No	

IDC Verification

Is IDC correct? Yes **Recommended IDC** -

IDC Change Reason

Visual Exam Comment The remaining waste by weight percent is Iron Base Metal/Alloy consisting of scrap metal.

AMWTP
Advanced Mixed Waste Treatment Project

AMWTP

VE Boxline and Repackaging Report

Date: 22-Sep-2014

Time: 07:44

Batch Id VEB14-00100 **Container Id** 10516319 **Analysis Id** 0000316578

Source Container

Is there a source container? Yes

Source Container ID	Location	IDC
10509022	destroyed @ 676- BXI/9	RF-760

IDC CODES

Current Container IDC Code: BN-508 **Recommended IDC Code:** -

Waste Material Items

Packaging Materials

Material Item	Quantity	Unit	Unit Wt	Item Wt(lbs)

Waste Items by Weight

Material Item	Quantity	Unit	Unit Wt	Item Wt(lbs)

Waste Items by Volume

Material Item	Quantity	Unit	Unit Wt	Item Wt(lbs)
Paper	1.000	PINTS	0.969	0.970
Plastic	2.000	PINTS	0.937	1.870

Waste Parameters

Waste Parameter	Remaining Weight %	Actual Weight Lbs
Iron-based Metals/Alloys	100.000	112.280
Aluminum-based Metals/Alloys	0.000	0.000
Other metals	0.000	0.000
Other Inorganic Materials	0.000	0.000
Cellulosics	0.000	0.970
Rubber	0.000	0.000
Plastic (Waste Materials)	0.000	1.870
Inorganic matrix	0.000	0.000
Organic matrix	0.000	0.000
Soils/gravel	0.000	0.000
Steel (packaging materials)	0.000	26.000
Plastic (packaging materials)	0.000	0.000
Cellulosics Packaging	0.000	0.000
MLLW Waste	0.000	0.000

Esignature History

Esig Approval Id	User Id	E-signature Date	Comment
2731897	SPEREZ	13-APR-14 22:35:30	
2731898	GMATLOCK	13-APR-14 22:35:32	

AMWTP
Advanced Mixed Waste Treatment Project

AMWTP

VE Boxline and Repackaging Report

Date: 22-Sep-2014
Time: 07:44

Batch Id VEB14-00100 **Container Id** 10516337 **Analysis Id** 0000316579

VE Date 13-APR-14 22:50:07 **Analysis Status** Pass
Gen-IDC Code BN-508 AMWTP Newly Generated Debris **VE Weight** 108.05 lbs
Closure Date 13-APR-14 22:50:07 **Procedure Id** INST-FOI-17 **Net Weight** 82.05 lbs
Container Type 55 **Revision** 27
Operator 1 REX BUSH **Waste Matrix** S5490 **Summary Category Group** S5000
Operator 2 TIM OZBURN **Equipment ID** VE BiD RPCK

General

Rigid Liner Present? No **Liner Type** NO LINER **Closure Method** No Bags
Liner Punctured? Yes **Layers Of Confinement** 0 **Fill Factor** 55 % **Liner Lid Present** No

Liquids

Liquids Present? No **Comment**

Liquid Between Liner and Drum 0 pints
Containerized Liquid pints
Internal Container with Liquid 0 pints
Other Liquids 0 pints
Total Liquid Amount 0 pints

Internal Container with Liquid No

Prohibited Liquids Present No

Containerized Liquid

Contents

Sharp Objects? Yes **Are Sharp Objects Protected?** No

	Value	*Comment*
Prohibited Compressed Gas Present?	No	
Explosives Present?	No	
Pyrophorics Present?	No	
Mercury Present?	No	
PCBs Present?	No	
PCB Mass (lbs)	0	
Wet Cell Batteries Present?	No	
Corrosives,Ignitables or Reactives Present?	No	
Beryllium Contaminates Present?	No	
Hazardous-Only Waste Present?	No	
Is Waste Incompatible with backfill, packaging materials, or shipping container materials?	No	
Sealed Containers Over 4L?	No	

IDC Verification

Is IDC correct? Yes **Recommended IDC** -

IDC Change Reason

Visual Exam Comment Remaining waste by weight percent is Aluminum-based metal alloys consisting of aluminum debris.

AMWTP

Advanced Mixed Waste Treatment Project

AMWTP

VE Boxline and Repackaging Report

Date: 22-Sep-2014

Time: 07:44

Batch Id VEB14-00100 **Container Id** 10516337 **Analysis Id** 0000316579

Source Container

Is there a source container? Yes

Source Container ID	Location	IDC
10508936	destroyed @ 676- BXI/15	RF-760

IDC CODES

Current Container IDC Code: BN-508 **Recommended IDC Code:** -

Waste Material Items

Packaging Materials

Material Item	Quantity	Unit	Unit Wt	Item Wt(lbs)

Waste Items by Weight

Material Item	Quantity	Unit	Unit Wt	Item Wt(lbs)

Waste Items by Volume

Material Item	Quantity	Unit	Unit Wt	Item Wt(lbs)
Paper	1.000	PINTS	0.969	0.970
Rubber	1.000	PINTS	1.554	1.550
Iron	0.500	PINTS	7.807	3.900
Plastic	2.000	PINTS	0.937	1.870
Floor Sweepings	1.000	PINTS	1.000	1.000

Waste Parameters

Waste Parameter	Remaining Weight %	Actual Weight Lbs
Iron-based Metals/Alloys	0.000	3.900
Aluminum-based Metals/Alloys	100.000	72.755
Other metals	0.000	0.000
Other Inorganic Materials	0.000	1.000
Cellulosics	0.000	0.970
Rubber	0.000	1.550
Plastic (Waste Materials)	0.000	1.870
Inorganic matrix	0.000	0.000
Organic matrix	0.000	0.000
Soils/gravel	0.000	0.000
Steel (packaging materials)	0.000	26.000
Plastic (packaging materials)	0.000	0.000
Cellulosics Packaging	0.000	0.000
MLLW Waste	0.000	0.000

Esignature History

Esig Approval Id	User Id	E-signature Date	Comment
2731899	RBUSH1	13-APR-14 22:50:07	
2731900	TOZBURN	13-APR-14 22:50:09	

Batch Id VEB14-00100 **Container Id** 10516339 **Analysis Id** 0000316580

VE Date 13-APR-14 22:52:49 **Analysis Status** Pass

Gen-IDC Code BN-508 AMWTP Newly Generated Debris **VE Weight** 94.82 lbs

Closure Date 13-APR-14 22:52:49 **Procedure Id** INST-FOI-17 **Net Weight** 68.82 lbs

Container Type 55 **Revision** 27

Operator 1 SHIRLEY PEREZ **Waste Matrix** S5490 **Summary Category Group** S5000

Operator 2 GUY MATLOCK **Equipment ID** VE BiD RPCK

General

Rigid Liner Present? No **Liner Type** NO LINER **Closure Method** No Bags

Liner Punctured? Yes **Layers Of Confinement** 0 **Fill Factor** 45 % **Liner Lid Present** No

Liquids

Liquids Present? No **Comment**

Liquid Between Liner and Drum 0 pints **Other Liquids** 0 pints

Containerized Liquid pints **Total Liquid Amount** 0 pints

Internal Container with Liquid 0 pints

Internal Container with Liquid No

Prohibited Liquids Present No

Containerized Liquid

Contents

Sharp Objects? Yes **Are Sharp Objects Protected?** No

	Value	*Comment*
Prohibited Compressed Gas Present?	No	
Explosives Present?	No	
Pyrophorics Present?	No	
Mercury Present?	No	
PCBs Present?	No	
PCB Mass (lbs)	0	
Wet Cell Batteries Present?	No	
Corrosives,Ignitables or Reactives Present?	No	
Beryllium Contaminates Present?	No	
Hazardous-Only Waste Present?	No	
Is Waste Incompatible with backfill, packaging materials, or shipping container materials?	No	
Sealed Containers Over 4L?	No	

IDC Verification

Is IDC correct? Yes **Recommended IDC** -

IDC Change Reason

Visual Exam Comment The remaining waste by weight percent is Iron Base Metals/Alloys consisting of scrap metal.

Batch Id VEB14-00100 Container Id 10516339 Analysis Id 0000316580

Source Container

Is there a source container? Yes

Source Container ID	Location	IDC
10509022	destroyed @ 676- BXI/9	RF-760

IDC CODES

Current Container IDC Code: BN-508 Recommended IDC Code: -

Waste Material Items

Packaging Materials

Material Item	Quantity	Unit	Unit Wt	Item Wt(lbs)

Waste Items by Weight

Material Item	Quantity	Unit	Unit Wt	Item Wt(lbs)

Waste Items by Volume

Material Item	Quantity	Unit	Unit Wt	Item Wt(lbs)
Paper	2.000	PINTS	0.969	1.940
Wood	6.000	PINTS	0.702	4.210
Plastic	2.000	PINTS	0.937	1.870

Waste Parameters

Waste Parameter	Remaining Weight %	Actual Weight Lbs
Iron-based Metals/Alloys	100.000	60.795
Aluminum-based Metals/Alloys	0.000	0.000
Other metals	0.000	0.000
Other Inorganic Materials	0.000	0.000
Cellulosics	0.000	6.150
Rubber	0.000	0.000
Plastic (Waste Materials)	0.000	1.870
Inorganic matrix	0.000	0.000
Organic matrix	0.000	0.000
Soils/gravel	0.000	0.000
Steel (packaging materials)	0.000	26.000
Plastic (packaging materials)	0.000	0.000
Cellulosics Packaging	0.000	0.000
MLLW Waste	0.000	0.000

Esignature History

Esig Approval Id	User Id	E-signature Date	Comment
2731901	SPEREZ	13-APR-14 22:52:49	
2731902	GMATLOCK	13-APR-14 22:52:49	

AMWTP
Advanced Mixed Waste Treatment Project

AMWTP

VE Boxline and Repackaging Report

Date: 22-Sep-2014
Time: 07:44

Batch Id VEB14-00100 **Container Id** 10516321 **Analysis Id** 0000316581

VE Date 13-APR-14 23:15:41 **Analysis Status** Pass
Gen-IDC Code BN-508 AMWTP Newly Generated Debris **VE Weight** 90.41 lbs
Closure Date 13-APR-14 23:15:41 **Procedure Id** INST-FOI-17 **Net Weight** 64.41 lbs
Container Type 55 **Revision** 27
Operator 1 SHIRLEY PEREZ **Waste Matrix** S5490 **Summary Category Group** S5000
Operator 2 GUY MATLOCK **Equipment ID** VE BiD RPCK

General

Rigid Liner Present? No **Liner Type** NO LINER **Closure Method** No Bags
Liner Punctured? Yes **Layers Of Confinement** 0 **Fill Factor** 45 % **Liner Lid Present** No

Liquids

Liquids Present? No **Comment**

Liquid Between Liner and Drum 0 pints
Containerized Liquid pints
Internal Container with Liquid 0 pints
Other Liquids 0 pints
Total Liquid Amount 0 pints

Internal Container with Liquid No

Prohibited Liquids Present No

Containerized Liquid

Contents

Sharp Objects? Yes **Are Sharp Objects Protected?** No

	Value	*Comment*
Prohibited Compressed Gas Present?	No	
Explosives Present?	No	
Pyrophorics Present?	No	
Mercury Present?	No	
PCBs Present?	No	
PCB Mass (lbs)	0	
Wet Cell Batteries Present?	No	
Corrosives,Ignitables or Reactives Present?	No	
Beryllium Contaminates Present?	No	
Hazardous-Only Waste Present?	No	
Is Waste Incompatible with backfill, packaging materials, or shipping container materials?	No	
Sealed Containers Over 4L?	No	

IDC Verification

Is IDC correct? Yes **Recommended IDC** -

IDC Change Reason

Visual Exam Comment The remaining waste by weight percent is Iron Base Metals/Alloys consisting of scrap metal.

AMWTP

Advanced Mixed Waste Treatment Project

AMWTP

VE Boxline and Repackaging Report

Date: 22-Sep-2014

Time: 07:44

Batch Id VEB14-00100 **Container Id** 10516321 **Analysis Id** 0000316581

Source Container

Is there a source container? Yes

Source Container ID	Location	IDC
10509022	destroyed @ 676- BXI/9	RF-760

IDC CODES

Current Container IDC Code: BN-508 **Recommended IDC Code:** -

Waste Material Items

Packaging Materials

Material Item	Quantity	Unit	Unit Wt	Item Wt(lbs)

Waste Items by Weight

Material Item	Quantity	Unit	Unit Wt	Item Wt(lbs)

Waste Items by Volume

Material Item	Quantity	Unit	Unit Wt	Item Wt(lbs)
Paper	2.000	PINTS	0.969	1.940
Wood	7.000	PINTS	0.702	4.910

Waste Parameters

Waste Parameter	Remaining Weight %	Actual Weight Lbs
Iron-based Metals/Alloys	100.000	57.555
Aluminum-based Metals/Alloys	0.000	0.000
Other metals	0.000	0.000
Other Inorganic Materials	0.000	0.000
Cellulosics	0.000	6.850
Rubber	0.000	0.000
Plastic (Waste Materials)	0.000	0.000
Inorganic matrix	0.000	0.000
Organic matrix	0.000	0.000
Soils/gravel	0.000	0.000
Steel (packaging materials)	0.000	26.000
Plastic (packaging materials)	0.000	0.000
Cellulosics Packaging	0.000	0.000
MLLW Waste	0.000	0.000

Esignature History

Esig Approval Id	User Id	E-signature Date	Comment
2731903	SPEREZ	13-APR-14 23:15:41	
2731904	GMATLOCK	13-APR-14 23:15:43	

-----End of VE Boxline Report-----

AMWTP
Advanced Mixed Waste Treatment Project

AMWTP

Non-Conformance Report

Date: 22-Sep-2014

Time: 07:45

*****Batch NCR(s)*****

Batch Type	VEB	Batch ID	VEB14-00100		
Trackwise Number		Status		Opened Date	Closed Date

*****Container NCR(s)*****

Container ID *or related Batch ID*	Trackwise Number	Status	Opened Date	Closed Date

*****End of Non-Conformance Report*****

AMWTP
Advanced Mixed Waste Treatment Project

AMWTP

Scale Check Event Report

Date: 22-Sep-2014

Time: 07:45

Batch Id	VEB14-00100	**Container Id**	10516335
Batch Id	VEB14-00100	**Container Id**	10516342
Batch Id	VEB14-00100	**Container Id**	10516346
Batch Id	VEB14-00100	**Container Id**	10516339
Batch Id	VEB14-00100	**Container Id**	10516341
Batch Id	VEB14-00100	**Container Id**	10516343
Batch Id	VEB14-00100	**Container Id**	10516314
Batch Id	VEB14-00100	**Container Id**	10516319
Batch Id	VEB14-00100	**Container Id**	10516318
Batch Id	VEB14-00100	**Container Id**	10516316
Batch Id	VEB14-00100	**Container Id**	10516287
Batch Id	VEB14-00100	**Container Id**	10516344
Batch Id	VEB14-00100	**Container Id**	10516330
Batch Id	VEB14-00100	**Container Id**	10516334
Batch Id	VEB14-00100	**Container Id**	10516322
Batch Id	VEB14-00100	**Container Id**	10516321
Batch Id	VEB14-00100	**Container Id**	10516324
Batch Id	VEB14-00100	**Container Id**	10516284
Batch Id	VEB14-00100	**Container Id**	10516345
Batch Id	VEB14-00100	**Container Id**	10516337

AMWTP
Advanced Mixed Waste Treatment Project

Reconciliation with Data Quality Objectives

Date: 08-OCT-2014
Time: 01:49:37 PM

Lot Number: BN510.3.0015

	Data Quality Objective	Answer	Comment
1	Have all containers in the lot been assigned the correct Waste Matrix Code?	YES	
2	Have waste material parameter weights been established for each container in the lot?	YES	
3	Does each waste container of waste contain transuranic (TRU) radioactive waste?	YES	
4	Does the waste stream exhibit a toxicity characteristic (TC) under 40 CFR Part 261, Subpart C?	YES	
5	Does the waste stream contain listed waste found in 20.4.1.200 NMAC incorporating 40 CFR, Part 261, Subpart D?	YES	
6	Can the waste stream be classified as hazardous or nonhazardous?	YES	
7	Have the overall completeness, comparability, and representativeness quality assurance objectives (QAOs) been met for each of the testing procedures as specified in MP-TRUW-8.2, Sections C3-2 and C3-3, for the lot?	YES	
8	Was an Open nonconformance report (NCR) search performed for all containers/pucks/source containers on the final list for the waste stream profile/reconciliation lot?	YES	
9	Was an Open NCR search performed for all batches in the final list for the waste stream profile/reconciliation lot?	YES	
10	Were all batches identified in the waste stream profile form (WSPF) or reconciliation lot complete through site project manager (SPM) signature release? List any batches identified as not complete through validation.	YES	
11	Were any open NCRs found that are applicable to the waste stream profile/reconciliation lot? List NCR, container, and batch.	NO	There are no open NCRs for any of the containers or batch data reports associated with the lot.
12	Is there an approved AK Sufficiency Determination for this waste stream?	NO	

Site Project Manager: NANCY KIRK

Date: 09-APR-14

AMWTP
Advanced Mixed Waste Treatment Project

Reconciliation Narrative Report

Date: 08-OCT-2014
Time: 01:51:02 PM

Lot Number: BN510.3.0015

Narrative Comments

Reconciliation was performed on validated drum file containers obtained from waste stream BN510.3, Revision 0, Supercompacted Debris Waste from the Advanced Mixed Waste Treatment Project. This Reconciliation Lot BN510.3.0015 consists of 25 containers of mixed transuranic waste. Each container file was analyzed and all data were reconciled using MP-TRUW-8.11 and MP-TRUW-8.14 WIPP approved procedures.

The absence of prohibited items is determined and documented through acceptable knowledge and confirmation activities. Radiography or visual examination is performed on each container in this waste stream as a confirmation activity. See Batch Correlation Tab for the associated RTR and Visual examinations. None of the listed containers contains prohibited items as defined by Section C-1c of the Quality Assurance Project Plan, MP-TRUW-8.2

Site Project Manager: NANCY KIRK **Date:** 09-APR-14

AMWTP
Advanced Mixed Waste Treatment Project

Reconciliation Batch Correlation Table

Date: 08-OCT-2014
Time: 01:51:31 PM

Lot Number: BN510.3.0015

Container ID	Headspace Gas WAP Batch	RTR Batch	Assay Batch	Visual Examination Batch	Solid Sampling Batch	Solid Analytical Batch
BN10515528	N/A	N/A	N/A	N/A	N/A	N/A
10514470	N/A	N/A	ASY14-00802	VEB14-00087	N/A	N/A
10514471	N/A	N/A	ASY14-00802	VEB14-00087	N/A	N/A
10514472	N/A	N/A	ASY14-00802	VEB14-00087	N/A	N/A
10514481	N/A	N/A	ASY14-00802	VEB14-00087	N/A	N/A
BN10515529	N/A	N/A	N/A	N/A	N/A	N/A
10514480	N/A	N/A	ASY14-00802	VEB14-00087	N/A	N/A
10514482	N/A	N/A	ASY14-00799	VEB14-00087	N/A	N/A
BN10515531	N/A	N/A	N/A	N/A	N/A	N/A
10242760	N/A	RTR13-00252	ASY13-03260	N/A	N/A	N/A
10330018	N/A	RTR13-00241	ASY13-03203	N/A	N/A	N/A
10365357	N/A	RTR13-00318	ASY13-03787	N/A	N/A	N/A
10453925	N/A	RTR14-00007	ASY14-00090	N/A	N/A	N/A
BN10515533	N/A	N/A	N/A	N/A	N/A	N/A
10514457	N/A	N/A	ASY14-00802	VEB14-00087	N/A	N/A
10514474	N/A	N/A	ASY14-00802	VEB14-00087	N/A	N/A
10514478	N/A	N/A	ASY14-00800	VEB14-00087	N/A	N/A
BN10515534	N/A	N/A	N/A	N/A	N/A	N/A
10242828	N/A	RTR13-00213	ASY13-02645	N/A	N/A	N/A
10357107	N/A	RTR14-00006	ASY14-00086	N/A	N/A	N/A
10453439	N/A	RTR14-00005	ASY14-00090	N/A	N/A	N/A
BN10515535	N/A	N/A	N/A	N/A	N/A	N/A
10003620	N/A	RTR13-00211	ASY13-02624	N/A	N/A	N/A
10011680	N/A	RTR13-00063	ASY13-01208	N/A	N/A	N/A
10100194	N/A	RTR13-00207	ASY13-02596	N/A	N/A	N/A
10136905	N/A	RTR13-00252	ASY13-03261	N/A	N/A	N/A
BN10515536	N/A	N/A	N/A	N/A	N/A	N/A
10352593	N/A	RTR14-00006	ASY14-00090	N/A	N/A	N/A
10368704	N/A	RTR14-00007	ASY14-00086	N/A	N/A	N/A
10368715	N/A	RTR13-00321	ASY13-03813	N/A	N/A	N/A
BN10515537	N/A	N/A	N/A	N/A	N/A	N/A
10242751	N/A	RTR13-00270	ASY13-03374	N/A	N/A	N/A
10359471	N/A	RTR13-00323	ASY14-00184	N/A	N/A	N/A
10359834	N/A	RTR14-00007	ASY14-00086	N/A	N/A	N/A
BN10515538	N/A	N/A	N/A	N/A	N/A	N/A
10107232	N/A	RTR13-00257	ASY13-03278	N/A	N/A	N/A
10137945	N/A	RTR13-00252	ASY13-03260	N/A	N/A	N/A
BN10516731	N/A	N/A	N/A	N/A	N/A	N/A
10514477	N/A	N/A	ASY14-00800	VEB14-00087	N/A	N/A
10516220	N/A	N/A	ASY14-00800	VEB14-00087	N/A	N/A
BN10516825	N/A	N/A	N/A	N/A	N/A	N/A
10516180	N/A	N/A	ASY14-00812	VEB14-00091	N/A	N/A
10516186	N/A	N/A	ASY14-00812	VEB14-00091	N/A	N/A
10516213	N/A	N/A	ASY14-00812	VEB14-00091	N/A	N/A
10516221	N/A	N/A	ASY14-00812	VEB14-00092	N/A	N/A
10516243	N/A	N/A	ASY14-00812	VEB14-00092	N/A	N/A
BN10516826	N/A	N/A	N/A	N/A	N/A	N/A
10516183	N/A	N/A	ASY14-00811	VEB14-00091	N/A	N/A
10516211	N/A	N/A	ASY14-00810	VEB14-00091	N/A	N/A
10516222	N/A	N/A	ASY14-00810	VEB14-00091	N/A	N/A
10516312	N/A	N/A	ASY14-00810	VEB14-00090	N/A	N/A
BN10516827	N/A	N/A	N/A	N/A	N/A	N/A
10514449	N/A	N/A	ASY14-00803	VEB14-00087	N/A	N/A
10516200	N/A	N/A	ASY14-00809	VEB14-00091	N/A	N/A

AMWTP
Advanced Mixed Waste Treatment Project

Reconciliation Batch Correlation Table

Date: 08-OCT-201
Time: 01:51:31 PM

Container ID	Headspace Gas WAP Batch	RTR Batch	Assay Batch	Visual Examination Batch	Solid Sampling Batch	Solid Analytical Batch
10516294	N/A	N/A	ASY14-00809	VEB14-00090	N/A	N/A
10516306	N/A	N/A	ASY14-00810	VEB14-00091	N/A	N/A
BN10516828	N/A	N/A	N/A	N/A	N/A	N/A
10516206	N/A	N/A	ASY14-00807	VEB14-00090	N/A	N/A
10516216	N/A	N/A	ASY14-00807	VEB14-00090	N/A	N/A
10516226	N/A	N/A	ASY14-00809	VEB14-00090	N/A	N/A
10516301	N/A	N/A	ASY14-00807	VEB14-00090	N/A	N/A
10516310	N/A	N/A	ASY14-00807	VEB14-00090	N/A	N/A
10516311	N/A	N/A	ASY14-00807	VEB14-00090	N/A	N/A
BN10516829	N/A	N/A	N/A	N/A	N/A	N/A
10516185	N/A	N/A	ASY14-00807	VEB14-00090	N/A	N/A
10516298	N/A	N/A	ASY14-00809	VEB14-00089	N/A	N/A
10516305	N/A	N/A	ASY14-00809	VEB14-00090	N/A	N/A
10516307	N/A	N/A	ASY14-00803	VEB14-00089	N/A	N/A
10516313	N/A	N/A	ASY14-00803	VEB14-00089	N/A	N/A
BN10516830	N/A	N/A	N/A	N/A	N/A	N/A
10514467	N/A	N/A	ASY14-00803	VEB14-00089	N/A	N/A
10516184	N/A	N/A	ASY14-00808	VEB14-00090	N/A	N/A
10516189	N/A	N/A	ASY14-00806	VEB14-00090	N/A	N/A
10516291	N/A	N/A	ASY14-00803	VEB14-00089	N/A	N/A
10516302	N/A	N/A	ASY14-00805	VEB14-00090	N/A	N/A
BN10516834	N/A	N/A	N/A	N/A	N/A	N/A
10516192	N/A	N/A	ASY14-00812	VEB14-00092	N/A	N/A
10516201	N/A	N/A	ASY14-00812	VEB14-00091	N/A	N/A
10516203	N/A	N/A	ASY14-00812	VEB14-00092	N/A	N/A
10516214	N/A	N/A	ASY14-00812	VEB14-00092	N/A	N/A
10516240	N/A	N/A	ASY14-00812	VEB14-00092	N/A	N/A
BN10516835	N/A	N/A	N/A	N/A	N/A	N/A
10516188	N/A	N/A	ASY14-00811	VEB14-00091	N/A	N/A
10516210	N/A	N/A	ASY14-00810	VEB14-00091	N/A	N/A
10516230	N/A	N/A	ASY14-00810	VEB14-00091	N/A	N/A
10516234	N/A	N/A	ASY14-00810	VEB14-00091	N/A	N/A
BN10516836	N/A	N/A	N/A	N/A	N/A	N/A
10516181	N/A	N/A	ASY14-00811	VEB14-00091	N/A	N/A
10516191	N/A	N/A	ASY14-00807	VEB14-00090	N/A	N/A
10516209	N/A	N/A	ASY14-00809	VEB14-00090	N/A	N/A
10516308	N/A	N/A	ASY14-00807	VEB14-00090	N/A	N/A
BN10516874	N/A	N/A	N/A	N/A	N/A	N/A
10516228	N/A	N/A	ASY14-00816	VEB14-00092	N/A	N/A
10516400	N/A	N/A	ASY14-00818	VEB14-00092	N/A	N/A
10516412	N/A	N/A	ASY14-00812	VEB14-00092	N/A	N/A
10516423	N/A	N/A	ASY14-00818	VEB14-00093	N/A	N/A
10516445	N/A	N/A	ASY14-00818	VEB14-00093	N/A	N/A
10516453	N/A	N/A	ASY14-00818	VEB14-00092	N/A	N/A
BN10516876	N/A	N/A	N/A	N/A	N/A	N/A
10516187	N/A	N/A	ASY14-00815	VEB14-00092	N/A	N/A
10516421	N/A	N/A	ASY14-00817	VEB14-00093	N/A	N/A
10516422	N/A	N/A	ASY14-00813	VEB14-00092	N/A	N/A
10516451	N/A	N/A	ASY14-00817	VEB14-00092	N/A	N/A
10516463	N/A	N/A	ASY14-00815	VEB14-00093	N/A	N/A
BN10516877	N/A	N/A	N/A	N/A	N/A	N/A
10516197	N/A	N/A	ASY14-00813	VEB14-00091	N/A	N/A
10516205	N/A	N/A	ASY14-00813	VEB14-00091	N/A	N/A
10516208	N/A	N/A	ASY14-00813	VEB14-00092	N/A	N/A
10516217	N/A	N/A	ASY14-00813	VEB14-00092	N/A	N/A
10516219	N/A	N/A	ASY14-00813	VEB14-00092	N/A	N/A

AMWTP
Advanced Mixed Waste Treatment Project

Reconciliation Batch Correlation Table

Date: 08-OCT-2014
Time: 01:51:31 PM

Container ID	Headspace Gas WAP Batch	RTR Batch	Assay Batch	Visual Examination Batch	Solid Sampling Batch	Solid Analytical Batch
10516241	N/A	N/A	ASY14-00813	VEB14-00091	N/A	N/A
BN10516878	N/A	N/A	N/A	N/A	N/A	N/A
10083286	N/A	RTR13-00267	ASY13-03359	N/A	N/A	N/A
10100982	N/A	RTR13-00207	ASY13-02596	N/A	N/A	N/A
10282156	N/A	RTR13-00310	ASY13-03728	N/A	N/A	N/A
BN10516879	N/A	N/A	N/A	N/A	N/A	N/A
10516410	N/A	N/A	ASY14-00816	VEB14-00093	N/A	N/A
10516440	N/A	N/A	ASY14-00816	VEB14-00093	N/A	N/A
10516442	N/A	N/A	ASY14-00818	VEB14-00093	N/A	N/A
10516449	N/A	N/A	ASY14-00816	VEB14-00093	N/A	N/A
10516469	N/A	N/A	ASY14-00816	VEB14-00093	N/A	N/A
10516475	N/A	N/A	ASY14-00818	VEB14-00093	N/A	N/A
BN10516880	N/A	N/A	N/A	N/A	N/A	N/A
10116906	N/A	RTR13-00288	ASY13-03577	N/A	N/A	N/A
10182192	N/A	RTR13-00252	ASY13-03257	N/A	N/A	N/A
10193372	N/A	RTR13-00253	ASY13-03261	N/A	N/A	N/A

DIVIDER

PAGE

AMWTP
Advanced Mixed Waste Treatment Project

Reconciliation with Data Quality Objectives

Date: 08-OCT-201
Time: 01:34:30 PM

Lot Number: BN510.3.0023

	Data Quality Objective	Answer	Comment
1	Have all containers in the lot been assigned the correct Waste Matrix Code?	YES	
2	Have waste material parameter weights been established for each container in the lot?	YES	
3	Does each waste container of waste contain transuranic (TRU) radioactive waste?	YES	
4	Does the waste stream exhibit a toxicity characteristic (TC) under 40 CFR Part 261, Subpart C?	YES	
5	Does the waste stream contain listed waste found in 20.4.1.200 NMAC incorporating 40 CFR, Part 261, Subpart D?	YES	
6	Can the waste stream be classified as hazardous or nonhazardous?	YES	
7	Have the overall completeness, comparability, and representativeness quality assurance objectives (QAOs) been met for each of the testing procedures as specified in MP-TRUW-8.2, Sections C3-2 and C3-3, for the lot?	YES	
8	Was an Open nonconformance report (NCR) search performed for all containers/pucks/source containers on the final list for the waste stream profile/reconciliation lot?	YES	
9	Was an Open NCR search performed for all batches in the final list for the waste stream profile/reconciliation lot?	YES	
10	Were all batches identified in the waste stream profile form (WSPF) or reconciliation lot complete through site project manager (SPM) signature release? List any batches identified as not complete through validation.	YES	
11	Were any open NCRs found that are applicable to the waste stream profile reconciliation lot? List NCR, container, and batch.	NO	There are no open NCRs for any of the containers or batch data reports associated with the lot.
12	Is there an approved AK Sufficiency Determination for this waste stream?	NO	

Site Project Manager: NANCY KIRK

Date: 29-MAY-14

AMWTP
Advanced Mixed Waste Treatment Project

Reconciliation Narrative Report

Date: 08-OCT-201
Time: 01:38:09 PM

Lot Number: BN510.3.0023

Narrative Comments

Reconciliation was performed on validated drum file containers obtained from waste stream BN510.3, Revision 0, Supercompacted Debris Waste from the Advanced Mixed Waste Treatment Project. This Reconciliation Lot BN510.3.0023 consists of 36 containers of mixed transuranic waste. Each container file was analyzed and all data were reconciled using MP-TRUW-8.11 and MP-TRUW-8.14 WIPP approved procedures.

The absence of prohibited items is determined and documented through acceptable knowledge and confirmation activities. Radiography or visual examination is performed on each container in this waste stream as a confirmation activity. See Batch Correlation Tab for the associated RTR and Visual examinations. None of the listed containers contains prohibited items as defined by Section C-1e of the Quality Assurance Project Plan, MP-TRUW-8.2.

BN10521591 BN10521591 removed from lot because assay is indeterminant. NKIRK 12-JUN-14

Site Project Manager: NANCY KIRK **Date:** 29-MAY-14

AMWTP
Advanced Mixed Waste Treatment Project

Reconciliation Batch Correlation Table

Date: 08-OCT-201
Time: 01:42:23 PM

Lot Number: BN510.3.0023

Container ID	Headspace Gas WAP Batch	RTR Batch	Assay Batch	Visual Examination Batch	Solid Sampling Batch	Solid Analytical Batch
BN10517114	N/A	N/A	N/A	N/A	N/A	N/A
10516351	N/A	N/A	ASY14-00874	VEB14-00098	N/A	N/A
10516370	N/A	N/A	ASY14-00871	VEB14-00099	N/A	N/A
10516380	N/A	N/A	ASY14-00871	VEB14-00099	N/A	N/A
10516392	N/A	N/A	ASY14-00866	VEB14-00097	N/A	N/A
10516393	N/A	N/A	ASY14-00871	VEB14-00099	N/A	N/A
BN10517115	N/A	N/A	N/A	N/A	N/A	N/A
10516324	N/A	N/A	ASY14-00874	VEB14-00100	N/A	N/A
10516326	N/A	N/A	ASY14-00873	VEB14-00099	N/A	N/A
10516344	N/A	N/A	ASY14-00873	VEB14-00100	N/A	N/A
10516358	N/A	N/A	ASY14-00874	VEB14-00099	N/A	N/A
10516560	N/A	N/A	ASY14-00866	VEB14-00095	N/A	N/A
BN10517120	N/A	N/A	N/A	N/A	N/A	N/A
10516278	N/A	N/A	ASY14-00873	VEB14-00099	N/A	N/A
10516283	N/A	N/A	ASY14-00873	VEB14-00099	N/A	N/A
10516315	N/A	N/A	ASY14-00871	VEB14-00099	N/A	N/A
10516317	N/A	N/A	ASY14-00871	VEB14-00099	N/A	N/A
10516342	N/A	N/A	ASY14-00873	VEB14-00100	N/A	N/A
10516357	N/A	N/A	ASY14-00867	VEB14-00098	N/A	N/A
10516386	N/A	N/A	ASY14-00869	VEB14-00098	N/A	N/A
BN10517121	N/A	N/A	N/A	N/A	N/A	N/A
10516362	N/A	N/A	ASY14-00866	VEB14-00098	N/A	N/A
10516363	N/A	N/A	ASY14-00870	VEB14-00099	N/A	N/A
10516366	N/A	N/A	ASY14-00871	VEB14-00099	N/A	N/A
10516377	N/A	N/A	ASY14-00870	VEB14-00099	N/A	N/A
10516383	N/A	N/A	ASY14-00867	VEB14-00097	N/A	N/A
BN10517122	N/A	N/A	N/A	N/A	N/A	N/A
10516318	N/A	N/A	ASY14-00874	VEB14-00100	N/A	N/A
10516335	N/A	N/A	ASY14-00874	VEB14-00100	N/A	N/A
10516341	N/A	N/A	ASY14-00873	VEB14-00100	N/A	N/A
10516371	N/A	N/A	ASY14-00868	VEB14-00098	N/A	N/A
10516381	N/A	N/A	ASY14-00870	VEB14-00099	N/A	N/A
10516394	N/A	N/A	ASY14-00866	VEB14-00097	N/A	N/A
BN10517123	N/A	N/A	N/A	N/A	N/A	N/A
10516280	N/A	N/A	ASY14-00874	VEB14-00099	N/A	N/A
10516314	N/A	N/A	ASY14-00874	VEB14-00100	N/A	N/A
10516350	N/A	N/A	ASY14-00874	VEB14-00099	N/A	N/A
10516352	N/A	N/A	ASY14-00866	VEB14-00098	N/A	N/A
10516360	N/A	N/A	ASY14-00865	VEB14-00098	N/A	N/A
10516384	N/A	N/A	ASY14-00873	VEB14-00099	N/A	N/A
10516391	N/A	N/A	ASY14-00871	VEB14-00098	N/A	N/A
BN10517124	N/A	N/A	N/A	N/A	N/A	N/A
10516346	N/A	N/A	ASY14-00873	VEB14-00100	N/A	N/A
10516354	N/A	N/A	ASY14-00870	VEB14-00098	N/A	N/A
10516364	N/A	N/A	ASY14-00866	VEB14-00098	N/A	N/A
10516385	N/A	N/A	ASY14-00869	VEB14-00099	N/A	N/A
10516389	N/A	N/A	ASY14-00870	VEB14-00099	N/A	N/A
BN10518061	N/A	N/A	N/A	N/A	N/A	N/A
10517840	N/A	N/A	ASY14-00946	VEB14-00114	N/A	N/A
10517842	N/A	N/A	ASY14-00950	VEB14-00114	N/A	N/A
10517843	N/A	N/A	ASY14-00947	VEB14-00114	N/A	N/A
10517845	N/A	N/A	ASY14-00946	VEB14-00114	N/A	N/A
10518213	N/A	N/A	ASY14-00954	VEB14-00116	N/A	N/A
BN10519961	N/A	N/A	N/A	N/A	N/A	N/A
10519270	N/A	N/A	ASY14-01142	VEB14-00144	N/A	N/A
10519327	N/A	N/A	ASY14-01142	VEB14-00143	N/A	N/A
10519371	N/A	N/A	ASY14-01142	VEB14-00144	N/A	N/A
10519404	N/A	N/A	ASY14-01143	VEB14-00144	N/A	N/A

AMWTP
Advanced Mixed Waste Treatment Project

Reconciliation Batch Correlation Table

Date: 08-OCT-2014
Time: 01:42:23 PM

Container ID	Headspace Gas WAP Batch	RTR Batch	Assay Batch	Visual Examination Batch	Solid Sampling Batch	Solid Analytical Batch
10519406	N/A	N/A	ASY14-01141	VEB14-00143	N/A	N/A
BN10519969	N/A	N/A	N/A	N/A	N/A	N/A
10519265	N/A	N/A	ASY14-01143	VEB14-00144	N/A	N/A
10519268	N/A	N/A	ASY14-01143	VEB14-00144	N/A	N/A
10519278	N/A	N/A	ASY14-01141	VEB14-00143	N/A	N/A
10519282	N/A	N/A	ASY14-01137	VEB14-00142	N/A	N/A
10519390	N/A	N/A	ASY14-01141	VEB14-00143	N/A	N/A
10519393	N/A	N/A	ASY14-01139	VEB14-00143	N/A	N/A
BN10520868	N/A	N/A	N/A	N/A	N/A	N/A
10520137	N/A	N/A	ASY14-01317	VEB14-00160	N/A	N/A
10520162	N/A	N/A	ASY14-01318	VEB14-00161	N/A	N/A
10520719	N/A	N/A	ASY14-01317	VEB14-00160	N/A	N/A
10520747	N/A	N/A	ASY14-01317	VEB14-00160	N/A	N/A
10520780	N/A	N/A	ASY14-01317	VEB14-00161	N/A	N/A
BN10520968	N/A	N/A	N/A	N/A	N/A	N/A
10520152	N/A	N/A	ASY14-01320	VEB14-00161	N/A	N/A
10520705	N/A	N/A	ASY14-01318	VEB14-00161	N/A	N/A
10520723	N/A	N/A	ASY14-01318	VEB14-00161	N/A	N/A
10520756	N/A	N/A	ASY14-01318	VEB14-00161	N/A	N/A
BN10520969	N/A	N/A	N/A	N/A	N/A	N/A
10516347	N/A	N/A	ASY14-01316	VEB14-00099	N/A	N/A
10520160	N/A	N/A	ASY14-01316	VEB14-00160	N/A	N/A
10520697	N/A	N/A	ASY14-01315	VEB14-00160	N/A	N/A
10520778	N/A	N/A	ASY14-01318	VEB14-00161	N/A	N/A
BN10521196	N/A	N/A	N/A	N/A	N/A	N/A
10011695	N/A	RTR13-00263	ASY13-03342	N/A	N/A	N/A
10027891	N/A	RTR13-00072	ASY13-01362	N/A	N/A	N/A
10306738	N/A	RTR13-00303	ASY13-03805	N/A	N/A	N/A
10473813	N/A	RTR13-00038	ASY13-00649	N/A	N/A	N/A
BN10521198	N/A	N/A	N/A	N/A	N/A	N/A
10001142	N/A	RTR11-00158	ASY11-00963	N/A	N/A	N/A
10093114	N/A	RTR11-00240	ASY12-02498	N/A	N/A	N/A
10476111	N/A	RTR13-00037	ASY13-00642	N/A	N/A	N/A
BN10521201	N/A	N/A	N/A	N/A	N/A	N/A
10023687	N/A	RTR11-00216	ASY09-00979	N/A	N/A	N/A
10350093	N/A	RTR11-00246	ASY11-01671	N/A	N/A	N/A
10476565	N/A	RTR13-00036	ASY13-00611	N/A	N/A	N/A
BN10521204	N/A	N/A	N/A	N/A	N/A	N/A
10011653	N/A	RTR13-00263	ASY13-03353	N/A	N/A	N/A
10011654	N/A	RTR13-00263	ASY13-03354	N/A	N/A	N/A
10011655	N/A	RTR13-00265	ASY13-03353	N/A	N/A	N/A
BN10521205	N/A	N/A	N/A	N/A	N/A	N/A
10027365	N/A	RTR13-00265	ASY13-03354	N/A	N/A	N/A
10476083	N/A	RTR13-00037	ASY13-00642	N/A	N/A	N/A
10486097	N/A	RTR13-00196	ASY13-02887	N/A	N/A	N/A
BN10521421	N/A	N/A	N/A	N/A	N/A	N/A
10006004	N/A	RTR13-00210	ASY13-02593	N/A	N/A	N/A
10011666	N/A	RTR13-00062	ASY13-01211	N/A	N/A	N/A
10011867	N/A	RTR13-00062	ASY13-01211	N/A	N/A	N/A
10316827	N/A	RTR11-00351	ASY11-02093	N/A	N/A	N/A
BN10521422	N/A	N/A	N/A	N/A	N/A	N/A
10011866	N/A	RTR13-00062	ASY13-01210	N/A	N/A	N/A
10027371	N/A	RTR13-00263	ASY13-03342	N/A	N/A	N/A
10306670	N/A	RTR13-00302	ASY13-03755	N/A	N/A	N/A

AMWTP
Advanced Mixed Waste Treatment Project

Reconciliation Batch Correlation Table

Date: 08-OCT-2014
Time: 01:42:23 PM

Container ID	Headspace Gas WAP Batch	RTR Batch	Assay Batch	Visual Examination Batch	Solid Sampling Batch	Solid Analytical Batch
10366544	N/A	RTR14-00033	ASY14-00492	N/A	N/A	N/A
BN10521425	N/A	N/A	N/A	N/A	N/A	N/A
10170444	N/A	RTR11-00231	ASY11-01435	N/A	N/A	N/A
10474759	N/A	RTR13-00038	ASY13-00662	N/A	N/A	N/A
10482355	N/A	RTR13-00066	ASY13-01732	N/A	N/A	N/A
10482531	N/A	RTR13-00066	ASY13-03079	N/A	N/A	N/A
BN10521554	N/A	N/A	N/A	N/A	N/A	N/A
10520202	N/A	N/A	ASY14-01380	VEB14-00170	N/A	N/A
10520229	N/A	N/A	ASY14-01380	VEB14-00170	N/A	N/A
10521121	N/A	N/A	ASY14-01380	VEB14-00169	N/A	N/A
10521141	N/A	N/A	ASY14-01380	VEB14-00169	N/A	N/A
BN10521556	N/A	N/A	N/A	N/A	N/A	N/A
10520200	N/A	N/A	ASY14-01380	VEB14-00170	N/A	N/A
10520228	N/A	N/A	ASY14-01380	VEB14-00169	N/A	N/A
10520773	N/A	N/A	ASY14-01355	VEB14-00164	N/A	N/A
10521011	N/A	N/A	ASY14-01355	VEB14-00164	N/A	N/A
10521102	N/A	N/A	ASY14-01355	VEB14-00164	N/A	N/A
10521133	N/A	N/A	ASY14-01379	VEB14-00169	N/A	N/A
BN10521559	N/A	N/A	N/A	N/A	N/A	N/A
10011683	N/A	RTR13-00062	ASY13-01208	N/A	N/A	N/A
10011684	N/A	RTR13-00062	ASY13-01208	N/A	N/A	N/A
10359100	N/A	RTR13-00136	ASY13-02844	N/A	N/A	N/A
10520251	N/A	N/A	ASY14-01378	VEB14-00169	N/A	N/A
BN10521593	N/A	N/A	N/A	N/A	N/A	N/A
10520188	N/A	N/A	ASY14-01467	VEB14-00172	N/A	N/A
10520189	N/A	N/A	ASY14-01465	VEB14-00172	N/A	N/A
10520205	N/A	N/A	ASY14-01384	VEB14-00171	N/A	N/A
10520243	N/A	N/A	ASY14-01465	VEB14-00172	N/A	N/A
10520246	N/A	N/A	ASY14-01467	VEB14-00172	N/A	N/A
BN10521594	N/A	N/A	N/A	N/A	N/A	N/A
10520183	N/A	N/A	ASY14-01389	VEB14-00172	N/A	N/A
10520193	N/A	N/A	ASY14-01390	VEB14-00171	N/A	N/A
10520204	N/A	N/A	ASY14-01390	VEB14-00172	N/A	N/A
10520219	N/A	N/A	ASY14-01390	VEB14-00172	N/A	N/A
10520220	N/A	N/A	ASY14-01389	VEB14-00172	N/A	N/A
10521111	N/A	N/A	ASY14-01384	VEB14-00170	N/A	N/A
BN10521597	N/A	N/A	N/A	N/A	N/A	N/A
10342869	N/A	RTR11-00246	ASY11-01671	N/A	N/A	N/A
10350090	N/A	RTR11-00246	ASY11-01674	N/A	N/A	N/A
10475745	N/A	RTR13-00038	ASY13-00662	N/A	N/A	N/A
BN10521818	N/A	N/A	N/A	N/A	N/A	N/A
10172694	N/A	RTR11-00227	ASY13-03581	N/A	N/A	N/A
10307587	N/A	RTR13-00304	ASY13-03697	N/A	N/A	N/A
10309135	N/A	RTR12-00164	ASY12-03982	N/A	N/A	N/A
10309782	N/A	RTR13-00325	ASY13-03853	N/A	N/A	N/A
BN10521821	N/A	N/A	N/A	N/A	N/A	N/A
10520728	N/A	N/A	ASY14-01490	VEB14-00173	N/A	N/A
10521024	N/A	N/A	ASY14-01490	VEB14-00173	N/A	N/A
BN10521822	N/A	N/A	N/A	N/A	N/A	N/A
10520197	N/A	N/A	ASY14-01466	VEB14-00172	N/A	N/A
10520198	N/A	N/A	ASY14-01466	VEB14-00172	N/A	N/A
10520206	N/A	N/A	ASY14-01466	VEB14-00172	N/A	N/A
10520242	N/A	N/A	ASY14-01466	VEB14-00173	N/A	N/A
BN10521823	N/A	N/A	N/A	N/A	N/A	N/A

AMWTP
Advanced Mixed Waste Treatment Project

Reconciliation Batch Correlation Table

Date: 08-OCT-2014
Time: 01:42:23 PM

Container ID	Headspace Gas WAP Batch	RTR Batch	Assay Batch	Visual Examination Batch	Solid Sampling Batch	Solid Analytical Batch
10521092	N/A	N/A	ASY14-01492	VEB14-00173	N/A	N/A
10521158	N/A	N/A	ASY14-01492	VEB14-00173	N/A	N/A
10521160	N/A	N/A	ASY14-01490	VEB14-00173	N/A	N/A
BN10521824	N/A	N/A	N/A	N/A	N/A	N/A
10310202	N/A	RTR11-00347	ASY11-02065	N/A	N/A	N/A
10345593	N/A	RTR11-00246	ASY11-01495	N/A	N/A	N/A
10475023	N/A	RTR13-00038	ASY13-00662	N/A	N/A	N/A
10475065	N/A	RTR13-00038	ASY13-00649	N/A	N/A	N/A
BN10521825	N/A	N/A	N/A	N/A	N/A	N/A
10521013	N/A	N/A	ASY14-01490	VEB14-00173	N/A	N/A
10521155	N/A	N/A	ASY14-01490	VEB14-00173	N/A	N/A
10521168	N/A	N/A	ASY14-01490	VEB14-00173	N/A	N/A
BN10521828	N/A	N/A	N/A	N/A	N/A	N/A
10307563	N/A	RTR13-00304	ASY13-03712	N/A	N/A	N/A
10325131	N/A	RTR12-00187	ASY13-03119	N/A	N/A	N/A
10474757	N/A	RTR13-00038	ASY13-00649	N/A	N/A	N/A
10521157	N/A	N/A	ASY14-01490	VEB14-00173	N/A	N/A
10521159	N/A	N/A	ASY14-01492	VEB14-00173	N/A	N/A
BN10521829	N/A	N/A	N/A	N/A	N/A	N/A
10307590	N/A	RTR13-00306	ASY13-03710	N/A	N/A	N/A
10308858	N/A	RTR12-00164	ASY13-00181	N/A	N/A	N/A
10308959	N/A	RTR12-00164	ASY12-04184	N/A	N/A	N/A
10323565	N/A	RTR13-00306	ASY13-03699	N/A	N/A	N/A
10323567	N/A	RTR12-00166	ASY12-04163	N/A	N/A	N/A

DIVIDER

PAGE

T-0983

SR 1:19.06

RECORD
BN004.01
2006-0238
SWALKER
03/11/2010

AMWTP
Advanced Mixed Waste Treatment Project
Bechtel BWXT Idaho, LLC

INTEROFFICE MEMORANDUM

Date: December 28, 2005

To: Eric Schweinsberg
Acceptable Knowledge/Site Project Manager

From: Angela K. Morse Angela K Morse 12-28-05
Site Quality Assurance Officer (SQAO)

Subject: QA Review of Lot BN004.01 for Data Reconciliation - AKM-012-2005

The containers identified in the final list for reconciliation in Lot BN004.01 have been screened for any outstanding deficiencies on Nonconformance Reports (NCRs). No outstanding deficiencies were identified.

These containers are released for lot reconciliation to proceed.

cc: Steve Carpenter
Corey Cannon
Joan Connolly
Donna Corey
Elvin Dumas
Bobby Eschenbaum
Lloyd Gouldthorpe
Mike Griffin
Kathy Leonard
Jason Lance
Jeff Mousseau
Lyle Ryman
Wes Skaar
Patricia Utley
Lori Varela
AMWTP Correspondence Control
Angela Morse Letter Log

AMWTP	Reconciliation with Data Quality Objectives	AMWTP Form-1597 Rev. 0 MP-TRUW-8.11 Effective Date: 12/06/04 Page 1 of 1

I certify by signature (below) that sufficient data have been collected to determine the following Program-required waste parameters.

WSPF# BN004.01

Data Quality Objective	Yes	No	N/A	Comment
1. Have all containers in the lot been assigned an appropriate Waste Matrix Code?	✓			
2. Have waste material parameter weights been established for each container in the lot?	✓			
3. Does each waste container of waste contain TRU radioactive waste?	✓			
4. Have mean concentrations, UCL_{90} values for the mean concentration, standard deviations, and the number of samples collected for each VOC in the headspace gas of waste containers in the waste stream lot been evaluated against the constituent hazardous waste number assignments?	✓			
5. Has the potential flammability of TRU waste headspace gases been evaluated for the lot?	✓			Containers will be evaluated on an individual basis through headspace gas and WWIS
6. Have mean concentrations, UCL_{90} for the mean concentrations, standard deviations, and number of samples collected for VOCs, SVOCs, and metals in the waste stream (if applicable) lot been evaluated against the constituent hazardous waste number assignments?	✓			
7. Does the waste stream exhibit a toxicity characteristic (TC) under 40 CFR Part 261, Subpart C?	✓			
8. Can the waste stream be classified as hazardous or nonhazardous at the 90-percent confidence level?	✓			
9. Have a sufficient number of waste containers been visually examined (as a QC check on radiography) to determine with a reasonable level of certainty that the UCL_{90} for the miscertification rate is less than 14 percent for the summary category group?	✓			
10. Was an appropriate packaging configuration and Drum Age Criteria (DAC) applied and documented in the headspace gas sampling documentation and was the drum age criteria met prior to sampling?	✓			
11. Have all TICs been appropriately identified and reported in accordance with the requirements of Section B3-1 for the lot?	✓			
12. Have the overall completeness, comparability, and representativeness QAOs been met for each of the analytical and testing procedures as specified in Sections B3-2 through B3-9 for the lot?	✓			
13. Have the PRQLs for all analyses been met for the lot?	✓			

Signature of Site Project Manager

Jason Lance
Printed Name

12/28/05
Date

AMWTP Advanced Mixed Waste Treatment Project	**Characterization Information Summary Report**	AMWTP Form-1598 Rev. 0 MP-TRUW-8.14 Effective Date: 11/30/04 Page 1 of 14

WSPF Number: BN004.01 Reconciliation Lot

SQAO [signature] Date: 12-23-05

SQAO signature indicates that the information presented in this package is consistent with analytical batch reports.

SPM [signature] Date: 12/23/05

SPM signature indicates concurrence with all information presented in this report.

Characterization Description:

Drum selection and quantity of drums for Totals Analysis; Reduced Headspace Gas Sampling; and/or Newly Generated Soils/Gravel have been evaluated and meet the requirements established in MP-TRUW-8.25, *RCRA Statistical Sampling*.

Y ☐ N☐ NA ☒

SPM Signature _____ Date 12/28/05

For "N" or "NA" provide rationale.

Reconciliation lot, only HSG data reported.

Narrative Summary

Reconciliation was performed on validated drum file containers obtained from waste stream BN004, Revision 0, Special Setups Waste from the Rocky Flats Environmental Technology Site (RFETS). This Reconciliation Lot BN004.01 consists of 100 drums of mixed transuranic waste. Each drum file was analyzed and all data were reconciled using MP-TRUW-8.11 and MP-TRUW-8.14 WIPP approved procedures. Statistics were performed on the analytical results from the headspace gas samples in accordance with MP-TRUW-8.25 procedure.

The results of the Lot BN004.01 headspace gas sampling and data analysis did not assign additional Hazardous Waste Numbers (HWNs). TICs detected in this lot are detailed in Table 1B. The total metal, VOC, SVOC analytical results and container data are found in the Characterization Information Summary from waste stream BN004, Lot 1. Cyclohexane, 1,2,4-Trimethylbenzene, 1,3,5-Trimethylbenzene, and Carbon Disulfide have been added as target compounds on the Agilent system at the AMWTP for the purpose of supporting VOC flammability evaluations in accordance with MP-TRUW-8.2, Quality Assurance Project Plan (QAPjP). Chloromethane is not a target analyte for this waste stream but will be reported because it has been added as a target compound for other waste streams at AMWTP.

Table 1A. Headspace Gas summary data.

	Number of Samples	# of Samples above MDL[a]	Transformation Used	Maximum (ppmv)	Mean (ppmv)	Standard Deviation (ppmv)	Upper 90% confidence limit (ppmv)	Transformed PRQL	PRQL (ppmv)	EPA Code
Chloromethane [c]	100	1	Natural log	1.65	0.70	0.36	0.75	2.30	10	-
Methanol [c]	100	36	Natural log	6.80	4.20	1.20	4.35	4.61	100	-
Ethyl ether [c]	100	2	Natural log	2.40	0.74	0.25	0.77	2.30	10	-
1,1-Dichloroethylene [c]	100	19	Natural log	5.86	1.19	1.16	1.34	2.30	10	D029 [d]
1,1,2-Trichloro-1,2,2-trifluoroethane [c]	100	1	Natural log	1.84	0.71	0.24	0.74	2.30	10	F001, F002 [d]
Acetone [c]	100	5	Natural log	5.60	3.01	0.56	3.08	4.61	100	-
Carbon disulfide	100	0	None	2.50	2.12	0.50	[b]	-	10	-
Methylene chloride [c]	100	1	Natural log	5.30	0.66	0.61	0.74	2.30	10	F002 [d]
trans-1,2-Dichloroethylene [c]	100	2	Natural log	2.14	0.59	0.48	0.65	2.30	10	-
1,1-Dichloroethane [c]	100	35	Natural log	6.06	1.73	1.71	1.95	2.30	10	-
cis-1,2-Dichloroethylene	100	1	None	5.30	1.91	0.66	1.99	-	10	-
Methyl ethyl ketone	100	0	None	24.50	20.60	6.36	[b]	-	100	F005 [d]
Chloroform [c]	100	1	Natural log	5.14	0.60	0.61	0.68	2.30	10	-
1,1,1-Trichloroethane [c]	100	50	Natural log	6.90	2.36	1.96	2.62	2.30	10	F001, F002 [d]
Cyclohexane [c]	100	19	Natural log	9.74	1.10	1.53	1.29	2.30	10	-
Carbon tetrachloride	100	0	None	2.55	1.99	0.59	[b]	-	10	F001 [d]
Benzene [c]	100	8	Natural log	2.48	0.70	0.53	0.77	2.30	10	F005 [d]
1,2-Dichloroethane	100	0	None	2.35	1.89	0.59	[b]	-	10	-
Trichloroethylene [c]	100	33	Natural log	5.19	1.35	1.33	1.52	2.30	10	F001, F002 [d]
Butanol [c]	100	1	Natural log	4.94	3.10	0.44	3.16	4.61	100	-
Methyl isobutyl ketone	100	1	None	19.50	17.49	4.70	18.09	-	100	-
Toluene [c]	100	29	Natural log	5.60	1.08	1.03	1.21	2.30	10	F005 [d]
Tetrachloroethylene	100	1	None	3.90	1.60	0.46	1.66	-	10	F001, F002 [d]
Chlorobenzene	100	0	None	2.10	1.76	0.53	[b]	-	10	-
Ethyl benzene [c]	100	12	Natural log	7.31	1.15	1.95	1.40	2.30	10	-
m&p-Xylene [c]	100	15	Natural log	8.32	1.25	2.27	1.54	2.30	10	-
o-Xylene [c]	100	12	Natural log	6.65	1.15	1.71	1.38	2.30	10	-
Bromoform	100	0	None	2.00	1.67	0.51	[b]	-	10	-
1,1,2,2-Tetrachloroethane	100	0	None	2.35	1.92	0.66	[b]	-	10	-
1,3,5-Trimethylbenzene	100	1	None	2.30	1.86	0.64	1.95	-	10	-
1,2,4-Trimethylbenzene	100	1	None	3.80	1.88	0.75	1.98	-	10	-

Did the Data verify the Acceptable Knowledge? Yes ✓ No _____

If no, describe the basis for assigning the EPA Hazardous Waste Code.

Notes:

a. When a measurement is reported as below detection, one-half the analysis method detection limit (MDL) is used. Note that the MDL for a given analyte may vary from sample to sample.

b. The means and standard deviation presented are the mean and standard deviation of the method detection limits (after dividing by 2). All measurements are below detection; therefore, the upper 90% confidence limit is not calculated.

c. All values are presented as transformed values.

d. The HWNs for these constituents have been applied based on acceptable knowledge. No additional codes were added as a result of headspace gas sampling.

Statistics Performed by: _____ Date: 12/28/05
Signature

Table 1B. Headspace gas summary data – tentatively identified compounds.

Tentatively Identified Compound	Maximum Observed Estimated Concentrations (ppmv)	# Samples Containing TIC	# Containers in Lot	% Detected	# Containers in Waste Stream to Date	% Detected
1-Hexene	49.0	1	100	1.0%	118	0.8%
1-Propene, 1-chloro-, (Z)-	40.0	1	100	1.0%	118	0.8%
2-Propanol, 2-methyl-	100.0	11	100	11.0%	118	9.3%
Cyclohexene	68.0	1	100	1.0%	118	0.8%
Cyclotetrasiloxane, octamethyl-	25.0	1	100	1.0%	118	0.8%
Decane	31.0	1	100	1.0%	118	0.8%
Disiloxane, hexamethyl-	440.0	1	100	1.0%	118	0.8%
Ethanol	210.0	8	100	8.0%	118	11.0%
Heptane	34.0	1	100	1.0%	118	0.8%
Isopropyl Alcohol	1900.0	2	100	2.0%	118	1.7%
Octane	84.0	8	100	8.0%	118	6.8%
Pentane, 2,2-dimethyl-	97.0	1	100	1.0%	118	0.8%
Pentane, 2,3-dimethyl-	57.0	1	100	1.0%	118	0.8%
Trisiloxane, octamethyl-	33.0	1	100	1.0%	118	0.8%

Notes: N/A

Did the data verify the Acceptable Knowledge? YES: ✓ NO: ___

If no, describe the basis for assigning the EPA Hazardous Waste Code. N/A

Verification of % Detected Calculation: _____ Signature Date: 12/28/05

Table 5. Correlation of container identification numbers to data package.

Container Number	Headspace Gas Sampling Data Package	RTR Data Package	RA Data Package	Visual Examination Data Package	Solid Sampling Data Package	Solid Analysis Data Package
10001226	HS505_00075	RTR03-00066	ASY03-00353	N/A	N/A	N/A
10001229	HS105_00178	RTR03-00073	ASY03-00347	N/A	N/A	N/A
10001320	HS205_00290	RTR03-00066	ASY03-00352	N/A	N/A	N/A
10016676	HS505_00081	RTR04-00225	ASY04-00483	N/A	N/A	N/A
10016678	HS505_00086	RTR04-00225	ASY04-00484	N/A	N/A	N/A
10016727	HS505_00076	RTR04-00188	ASY04-00443	N/A	N/A	N/A
10016731	HS205_00286	RTR04-00187	ASY04-00443	N/A	N/A	N/A
10016741	HS505_00079	RTR04-00186	ASY04-00445	N/A	N/A	N/A
10016745	HS505_00071	RTR04-00185	ASY04-00449	N/A	N/A	N/A
10016821	HS505_00081	RTR04-00199	ASY04-00467	N/A	N/A	N/A
10016827	HS505_00081	RTR04-00198	ASY04-00469	N/A	N/A	N/A
10016830	HS205_00294	RTR04-00198	ASY04-00469	N/A	N/A	N/A
10016834	HS505_00072	RTR04-00190	ASY04-00453	N/A	N/A	N/A
10016835	HS505_00081	RTR04-00200	ASY04-00462	N/A	N/A	N/A
10016836	HS505_00074	RTR04-00197	ASY04-00460	N/A	N/A	N/A
10016837	HS505_00083	RTR04-00200	ASY04-00465	N/A	N/A	N/A
10016838	HS505_00080	RTR04-00199	ASY04-00467	N/A	N/A	N/A
10017120	HS505_00081	RTR04-00217	ASY04-00472	N/A	N/A	N/A
10017121	HS105_00172	RTR04-00217	ASY04-00474	N/A	N/A	N/A
10017152	HS505_00086	RTR04-00219	ASY04-00474	N/A	N/A	N/A
10017155	HS205_00171	RTR04-00220	ASY04-00482	N/A	N/A	N/A
10017158	HS505_00075	RTR04-00220	ASY04-00481	N/A	N/A	N/A
10017160	HS505_00086	RTR04-00220	ASY04-00475	N/A	N/A	N/A
10017162	HS505_00073	RTR04-00218	ASY04-00472	N/A	N/A	N/A
10017163	HS505_00082	RTR04-00218	ASY04-00473	N/A	N/A	N/A
10017166	HS505_00087	RTR04-00218	ASY04-00474	N/A	N/A	N/A
10017175	HS505_00091	RTR04-00220	ASY04-00475	N/A	N/A	N/A
10017181	HS505_00076	RTR04-00216	ASY04-00471	N/A	N/A	N/A
10017186	HS205_00289	RTR04-00189	ASY04-00425	N/A	N/A	N/A
10017187	HS505_00073	RTR04-00218	ASY04-00473	N/A	N/A	N/A
10017190	HS505_00083	RTR04-00216	ASY04-00472	N/A	N/A	N/A
10017193	HS505_00072	RTR04-00216	ASY04-00473	N/A	N/A	N/A
10017194	HS505_00087	RTR04-00217	ASY04-00472	N/A	N/A	N/A
10018314	HS505_00075	RTR04-00204	ASY04-00602	N/A	N/A	N/A
10018652	HS505_00074	RTR04-00209	ASY04-00466	N/A	N/A	N/A
10018653	HS505_00081	RTR04-00209	ASY04-00466	N/A	N/A	N/A
10018654	HS405_00341	RTR04-00209	ASY04-00467	N/A	N/A	N/A

Container Number	Headspace Gas Sampling Data Package	RTR Data Package	RA Data Package	Visual Examination Data Package	Solid Sampling Data Package	Solid Analysis Data Package
10018664	HS505_00072	RTR04-00206	ASY04-00458	N/A	N/A	N/A
10018667	HS505_00072	RTR04-00206	ASY04-00456	N/A	N/A	N/A
10018668	HS505_00068	RTR04-00205	ASY04-00456	N/A	N/A	N/A
10019211	HS505_00069	RTR04-00311	ASY04-00784	N/A	N/A	N/A
10020120	HS405_00311	RTR04-00311	ASY04-00665	N/A	N/A	N/A
10020160	HS505_00069	RTR04-00372	ASY04-00664	N/A	N/A	N/A
10020163	HS505_00068	RTR04-00373	ASY04-00664	N/A	N/A	N/A
10021237	HS205_00282	RTR04-00318	ASY04-00787	N/A	N/A	N/A
10021811	HS505_00072	RTR04-00252	ASY04-00740	N/A	N/A	N/A
10022339	HS405_00311	RTR04-00290	ASY04-00774	N/A	N/A	N/A
10022340	HS505_00069	RTR04-00290	ASY04-00647	N/A	N/A	N/A
10022342	HS505_00079	RTR04-00290	ASY04-00647	N/A	N/A	N/A
10022344	HS505_00071	RTR04-00317	ASY04-00674	N/A	N/A	N/A
10022515	HS505_00074	RTR04-00292	ASY04-00777	N/A	N/A	N/A
10022517	HS405_00311	RTR04-00292	ASY04-00777	N/A	N/A	N/A
10022848	HS405_00311	RTR04-00290	ASY04-00774	N/A	N/A	N/A
10022859	HS405_00311	RTR04-00292	ASY04-00818	N/A	N/A	N/A
10025352	HS505_00069	RTR04-00378	ASY04-00730	N/A	N/A	N/A
10025354	HS505_00068	RTR04-00377	ASY04-00664	N/A	N/A	N/A
10025976	HS405_00311	RTR04-00408	ASY04-00830	N/A	N/A	N/A
10026005	HS405_00331	RTR04-00409	ASY04-00821	N/A	N/A	N/A
10027247	HS505_00083	RTR04-00405	ASY04-00771	N/A	N/A	N/A
10029038	HS405_00312	RTR05-03724	ASY05-04484	N/A	N/A	N/A
10031650	HS405_00341	RTR05-03724	ASY05-04205	N/A	N/A	N/A
10031810	HS405_00312	RTR05-04066	ASY05-04803	N/A	N/A	N/A
10031944	HS205_00282	RTR05-03784	ASY05-04503	N/A	N/A	N/A
10031990	HS405_00311	RTR05-03744	ASY05-04484	N/A	N/A	N/A
10032020	HS405_00311	RTR05-03844	ASY05-04324	N/A	N/A	N/A
10032024	HS505_00071	RTR05-03784	ASY05-04523	N/A	N/A	N/A
10032181	HS505_00069	RTR05-03744	ASY05-04544	N/A	N/A	N/A
10032196	HS505_00079	RTR05-03764	ASY05-04544	N/A	N/A	N/A
10032261	HS405_00312	RTR05-03764	ASY05-04483	N/A	N/A	N/A
10036723	HS505_00096	RTR05-06314	ASY05-11120	N/A	N/A	N/A
10036775	HS505_00090	RTR05-06310	ASY05-11104	N/A	N/A	N/A
10037070	HS505_00071	RTR05-03764	ASY05-04483	N/A	N/A	N/A
10037340	HS505_00071	RTR05-03764	ASY05-04544	N/A	N/A	N/A
10038785	HS405_00311	RTR05-03804	ASY05-04324	N/A	N/A	N/A
10039124	HS205_00282	RTR05-03804	ASY05-04324	N/A	N/A	N/A

Container Number	Headspace Gas Sampling Data Package	RTR Data Package	RA Data Package	Visual Examination Data Package	Solid Sampling Data Package	Solid Analysis Data Package
10048268	HS505_00069	RTR05-04065	ASY05-05043	N/A	N/A	N/A
10048269	HS205_00303	RTR05-04065	ASY05-04784	N/A	N/A	N/A
10048271	HS405_00332	RTR05-04065	ASY05-04784	N/A	N/A	N/A
10048272	HS205_00303	RTR05-04065	ASY05-04785	N/A	N/A	N/A
10048276	HS205_00303	RTR05-04065	ASY05-04785	N/A	N/A	N/A
10048278	HS405_00341	RTR05-04065	ASY05-05027	N/A	N/A	N/A
10048279	HS405_00332	RTR05-04066	ASY05-04784	N/A	N/A	N/A
10048280	HS505_00071	RTR05-04064	ASY05-05027	N/A	N/A	N/A
10048287	HS205_00282	RTR05-04065	ASY05-04963	N/A	N/A	N/A
10048296	HS405_00332	RTR05-04066	ASY05-04785	N/A	N/A	N/A
10048395	HS405_00332	RTR05-04064	ASY05-04763	N/A	N/A	N/A
10048401	HS505_00068	RTR05-04065	ASY05-04984	N/A	N/A	N/A
10048402	HS505_00069	RTR05-04065	ASY05-04984	N/A	N/A	N/A
10048403	HS505_00069	RTR05-04065	ASY05-04984	N/A	N/A	N/A
10048405	HS405_00312	RTR05-04005	ASY05-04664	N/A	N/A	N/A
10048444	HS505_00072	RTR05-04065	ASY05-05043	N/A	N/A	N/A
10048446	HS405_00332	RTR05-04064	ASY05-04763	N/A	N/A	N/A
10048447	HS105_00167	RTR05-04025	ASY05-04703	N/A	N/A	N/A
10048449	HS505_00068	RTR05-04065	ASY05-04984	N/A	N/A	N/A
10048453	HS205_00303	RTR05-04065	ASY05-04785	N/A	N/A	N/A
10048454	HS205_00303	RTR05-04064	ASY05-04763	N/A	N/A	N/A
10048456	HS505_00067	RTR05-04065	ASY05-05043	N/A	N/A	N/A
10054134	HS505_00090	RTR05-06319	ASY05-11141	N/A	N/A	N/A
10056040	HS505_00096	RTR05-06316	ASY05-11126	N/A	N/A	N/A
10058482	HS505_00090	RTR05-06310	ASY05-11104	N/A	N/A	N/A

Notes: N/A

Table 6. RTR/VE summary of prohibited items and AK confirmation. [a]

Container Number	RTR Prohibited Items	Visual Examination Prohibited Items [c]	AK Confirmation [b]
10001226	None	N/A	Complete
10001229	None	N/A	Complete
10001320	None	N/A	Complete
10016676	None	N/A	Complete
10016678	None	N/A	Complete
10016727	None	N/A	Complete
10016731	None	N/A	Complete
10016741	None	N/A	Complete
10016745	None	N/A	Complete
10016821	None	N/A	Complete
10016827	None	N/A	Complete
10016830	None	N/A	Complete
10016834	None	N/A	Complete
10016835	None	N/A	Complete
10016836	None	N/A	Complete
10016837	None	N/A	Complete
10016838	None	N/A	Complete
10017120	None	N/A	Complete
10017121	None	N/A	Complete
10017152	None	N/A	Complete
10017155	None	N/A	Complete
10017158	None	N/A	Complete
10017160	None	N/A	Complete
10017162	None	N/A	Complete
10017163	None	N/A	Complete
10017166	None	N/A	Complete
10017175	None	N/A	Complete
10017181	None	N/A	Complete
10017186	None	N/A	Complete
10017187	None	N/A	Complete
10017190	None	N/A	Complete
10017193	None	N/A	Complete
10017194	None	N/A	Complete
10018314	None	N/A	Complete
10018652	None	N/A	Complete
10018653	None	N/A	Complete
10018654	None	N/A	Complete
10018664	None	N/A	Complete
10018667	None	N/A	Complete
10018668	None	N/A	Complete

Container Number	RTR Prohibited Items	Visual Examination Prohibited Items [c]	AK Confirmation [b]
10019211	None	N/A	Complete
10020120	None	N/A	Complete
10020160	None	N/A	Complete
10020162	None	N/A	Complete
10021237	None	N/A	Complete
10021811	None	N/A	Complete
10022339	None	N/A	Complete
10022340	None	N/A	Complete
10022342	None	N/A	Complete
10022344	None	N/A	Complete
10022515	None	N/A	Complete
10022517	None	N/A	Complete
10022848	None	N/A	Complete
10022859	None	N/A	Complete
10025352	None	N/A	Complete
10025354	None	N/A	Complete
10025976	None	N/A	Complete
10026005	None	N/A	Complete
10027247	None	N/A	Complete
10029038	None	N/A	Complete
10031650	None	N/A	Complete
10031810	None	N/A	Complete
10031944	None	N/A	Complete
10031990	None	N/A	Complete
10032020	None	N/A	Complete
10032024	None	N/A	Complete
10032181	None	N/A	Complete
10032196	None	N/A	Complete
10032261	None	N/A	Complete
10036723	None	N/A	Complete
10036775	None	N/A	Complete
10037070	None	N/A	Complete
10037340	None	N/A	Complete
10038785	None	N/A	Complete
10039124	None	N/A	Complete
10048268	None	N/A	Complete
10048269	None	N/A	Complete
10048271	None	N/A	Complete
10048272	None	N/A	Complete
10048276	None	N/A	Complete
10048278	None	N/A	Complete

Container Number	RTR Prohibited Items	Visual Examination Prohibited Items [c]	AK Confirmation [b]
10048279	None	N/A	Complete
10048280	None	N/A	Complete
10048287	None	N/A	Complete
10048296	None	N/A	Complete
10048395	None	N/A	Complete
10048401	None	N/A	Complete
10048402	None	N/A	Complete
10048403	None	N/A	Complete
10048405	None	N/A	Complete
10048444	None	N/A	Complete
10048446	None	N/A	Complete
10048447	None	N/A	Complete
10048449	None	N/A	Complete
10048453	None	N/A	Complete
10048454	None	N/A	Complete
10048456	None	N/A	Complete
10054134	None	N/A	Complete
10056040	None	N/A	Complete
10058482	None	N/A	Complete

Notes:

a. See Table 5 for the associated RTR and visual examination data packages. None of the listed containers contains prohibited items as defined by Section B-1c of the Advanced Mixed Waste Treatment Project Quality Assurance Project Plan (QAPjP), MP_TRUW_8.2. The absence of prohibited items is determined and documented through acceptable knowledge and confirmation activities. Radiography or visual examination is performed on each container in this waste stream as a confirmation activity.

b. Acceptable Knowledge confirmations for RTR and visual examinations are conducted by an Acceptable Knowledge Expert on every drum by completing a checklist for each RTR and visual batch. This checklist can be accessed through the batches listed in Table 5.

c. None of these drums have a VE in lieu of RTR examination. N/A indicates that a visual examination was not conducted on the container.

Table 7. Sample identification number cross-correlation table.

Container Number	Headspace Gas Sample Number	Solidified Sample Number(s)
10001226	HS505_00075B-13	N/A
10001229	HS105_00178B-11	N/A
10001320	HS205_00290B-09	N/A
10016676	HS505_00081B-03	N/A
10016678	HS505_00086B-13	N/A
10016727	HS505_00076C-07	N/A
10016731	HS205_00286B-05	N/A
10016741	HS505_00079B-21	N/A
10016745	HS505_00071B-04	N/A
10016821	HS505_00081B-04	N/A
10016827	HS505_00081B-10	N/A
10016830	HS205_00294B-17	N/A
10016834	HS505_00072B-01	N/A
10016835	HS505_00081B-20	N/A
10016836	HS505_00074B-16	N/A
10016837	HS505_00083B-18	N/A
10016838	HS505_00080B-14	N/A
10017120	HS505_00081B-09	N/A
10017121	HS105_00172B-18	N/A
10017152	HS505_00086B-08	N/A
10017155	HS205_00171B-11	N/A
10017158	HS505_00075B-09	N/A
10017160	HS505_00086B-06	N/A
10017162	HS505_00073B-09	N/A
10017163	HS505_00082B-20	N/A
10017166	HS505_00087B-01	N/A
10017175	HS505_00091B-19	N/A
10017181	HS505_00076C-09	N/A
10017186	HS205_00289B-12	N/A
10017187	HS505_00073B-08	N/A
10017190	HS505_00083B-12	N/A
10017193	HS505_00072B-17	N/A
10017194	HS505_00087B-06	N/A
10018314	HS505_00075B-04	N/A
10018652	HS505_00074B-07	N/A
10018653	HS505_00081B-17	N/A
10018654	HS405_00341B-09	N/A
10018664	HS505_00072B-06	N/A
10018667	HS505_00072B-10	N/A

Container Number	Headspace Gas Sample Number	Solidified Sample Number(s)
10018668	HS505_00068B-14	N/A
10019211	HS505_00069B-15	N/A
10020120	HS405_00311B-09	N/A
10020160	HS505_00069B-07	N/A
10020162	HS505_00068B-01	N/A
10021237	HS205_00282B-20	N/A
10021811	HS505_00072B-16	N/A
10022339	HS405_00311B-14	N/A
10022340	HS505_00069B-20	N/A
10022342	HS505_00079B-06	N/A
10022344	HS505_00071B-18	N/A
10022515	HS505_00074B-04	N/A
10022517	HS405_00311B-21	N/A
10022848	HS405_00311B-05	N/A
10022859	HS405_00311B-15	N/A
10025352	HS505_00069B-19	N/A
10025354	HS505_00068B-09	N/A
10025976	HS405_00311B-10	N/A
10026005	HS405_00331B-04	N/A
10027247	HS505_00083B-16	N/A
10029038	HS405_00312B-05	N/A
10031650	HS405_00341B-07	N/A
10031810	HS405_00312B-09	N/A
10031944	HS205_00282B-16	N/A
10031990	HS405_00311B-04	N/A
10032020	HS405_00311B-17	N/A
10032024	HS505_00071B-01	N/A
10032181	HS505_00069B-12	N/A
10032196	HS505_00079B-05	N/A
10032261	HS405_00312B-06	N/A
10036723	HS505_00096B-10	N/A
10036775	HS505_00090B-15	N/A
10037070	HS505_00071B-12	N/A
10037340	HS505_00071B-19	N/A
10038785	HS405_00311B-16	N/A
10039124	HS205_00282B-04	N/A
10048268	HS505_00069B-05	N/A
10048269	HS205_00303B-21	N/A
10048271	HS405_00332B-09	N/A
10048272	HS205_00303B-15	N/A
10048276	HS205_00303B-05	N/A

Container Number	Headspace Gas Sample Number	Solidified Sample Number(s)
10048278	HS405_00341B-13	N/A
10048279	HS405_00332B-16	N/A
10048280	HS505_00071B-16	N/A
10048287	HS205_00282B-21	N/A
10048296	HS405_00332B-01	N/A
10048395	HS405_00332B-17	N/A
10048401	HS505_00068B-05	N/A
10048402	HS505_00069B-10	N/A
10048403	HS505_00069B-16	N/A
10048405	HS405_00312B-03	N/A
10048444	HS505_00072B-13	N/A
10048446	HS405_00332B-06	N/A
10048447	HS105_00167B-13	N/A
10048449	HS505_00068B-10	N/A
10048453	HS205_00303B-07	N/A
10048454	HS205_00303B-02	N/A
10048456	HS505_00067B-20	N/A
10054134	HS505_00090B-09	N/A
10056040	HS505_00096B-16	N/A
10058482	HS505_00090B-20	N/A

Notes: N/A

Analyte	Container	Sample no.	Concentration (ppm)	U	D	Z	J	E	B	Analyte Order
Chloromethane	10001226	HS505_00075B-13	5.2	U						1
Methanol	10001226	HS505_00075B-13	72.0	U						2
Ethyl ether	10001226	HS505_00075B-13	4.6	U						3
1,1-Dichloroethylene	10001226	HS505_00075B-13	5.1				J			4
1,1,2-Trichloro-1,2,2-trifluoroethane	10001226	HS505_00075B-13	4.7	U						5
Acetone	10001226	HS505_00075B-13	51.0	U						6
Carbon disulfide	10001226	HS505_00075B-13	5.0	U						7
Methylene chloride	10001226	HS505_00075B-13	4.6	U						8
trans-1,2-Dichloroethylene	10001226	HS505_00075B-13	4.5	U						9
1,1-Dichloroethane	10001226	HS505_00075B-13	4.7	U						10
cis-1,2-Dichloroethylene	10001226	HS505_00075B-13	4.5	U						11
Methyl ethyl ketone	10001226	HS505_00075B-13	49.0	U						12
Chloroform	10001226	HS505_00075B-13	4.6	U						13
1,1,1-Trichloroethane	10001226	HS505_00075B-13	35.0							14
Cyclohexane	10001226	HS505_00075B-13	4.4	U						15
Carbon tetrachloride	10001226	HS505_00075B-13	4.9	U						16
Benzene	10001226	HS505_00075B-13	4.5	U						17
1,2-Dichloroethane	10001226	HS505_00075B-13	4.7	U						18
Trichloroethylene	10001226	HS505_00075B-13	4.6	U						19
Butanol	10001226	HS505_00075B-13	55.0	U						20
Methyl isobutyl ketone	10001226	HS505_00075B-13	39.0	U						21
Toluene	10001226	HS505_00075B-13	4.1	U						22
Tetrachloroethylene	10001226	HS505_00075B-13	3.7	U						23
Chlorobenzene	10001226	HS505_00075B-13	4.2	U						24
Ethyl benzene	10001226	HS505_00075B-13	4.3	U						25
m&p-Xylene	10001226	HS505_00075B-13	3.8	U						26
o-Xylene	10001226	HS505_00075B-13	4.4	U						27
Bromoform	10001226	HS505_00075B-13	4.0	U						28
1,1,2,2-Tetrachloroethane	10001226	HS505_00075B-13	4.7	U						29
1,3,5-Trimethylbenzene	10001226	HS505_00075B-13	4.6	U						30
1,2,4-Trimethylbenzene	10001226	HS505_00075B-13	4.7	U						31
Chloromethane	10001229	HS105_00178B-11	2.5	U						1
Methanol	10001229	HS105_00178B-11	150.0							2
Ethyl ether	10001229	HS105_00178B-11	2.5	U						3
1,1-Dichloroethylene	10001229	HS105_00178B-11	2.7	U						4
1,1,2-Trichloro-1,2,2-trifluoroethane	10001229	HS105_00178B-11	2.8	U						5
Acetone	10001229	HS105_00178B-11	13.0	U						6
Carbon disulfide	10001229	HS105_00178B-11	2.6	U						7
Methylene chloride	10001229	HS105_00178B-11	1.6	U						8
trans-1,2-Dichloroethylene	10001229	HS105_00178B-11	1.4	U						9
1,1-Dichloroethane	10001229	HS105_00178B-11	1.5	U						10
cis-1,2-Dichloroethylene	10001229	HS105_00178B-11	1.5	U						11
Methyl ethyl ketone	10001229	HS105_00178B-11	16.0	U						12
Chloroform	10001229	HS105_00178B-11	1.3	U						13
1,1,1-Trichloroethane	10001229	HS105_00178B-11	14.0							14
Cyclohexane	10001229	HS105_00178B-11	1.2	U						15
Carbon tetrachloride	10001229	HS105_00178B-11	1.9	U						16
Benzene	10001229	HS105_00178B-11	1.2	U						17
1,2-Dichloroethane	10001229	HS105_00178B-11	1.7	U						18
Trichloroethylene	10001229	HS105_00178B-11	3.2				J			19
Butanol	10001229	HS105_00178B-11	47.0	U						20
Methyl isobutyl ketone	10001229	HS105_00178B-11	30.0	U						21
Toluene	10001229	HS105_00178B-11	4.9				J			22
Tetrachloroethylene	10001229	HS105_00178B-11	1.3	U						23
Chlorobenzene	10001229	HS105_00178B-11	1.4	U						24
Ethyl benzene	10001229	HS105_00178B-11	1.5	U						25
m&p-Xylene	10001229	HS105_00178B-11	3.1				J			26
o-Xylene	10001229	HS105_00178B-11	1.5	U						27
Bromoform	10001229	HS105_00178B-11	1.3	U						28
1,1,2,2-Tetrachloroethane	10001229	HS105_00178B-11	1.2	U						29
1,3,5-Trimethylbenzene	10001229	HS105_00178B-11	1.3	U						30
1,2,4-Trimethylbenzene	10001229	HS105_00178B-11	1.2	U						31
Chloromethane	10001320	HS205_00290B-09	3.2	U						1
Methanol	10001320	HS205_00290B-09	760.0							2
Ethyl ether	10001320	HS205_00290B-09	3.4	U						3
1,1-Dichloroethylene	10001320	HS205_00290B-09	2.5	U						4
1,1,2-Trichloro-1,2,2-trifluoroethane	10001320	HS205_00290B-09	3.3	U						5
Acetone	10001320	HS205_00290B-09	13.0	U						6
Carbon disulfide	10001320	HS205_00290B-09	2.5	U						7
Methylene chloride	10001320	HS205_00290B-09	1.5	U						8
trans-1,2-Dichloroethylene	10001320	HS205_00290B-09	1.2	U						9
1,1-Dichloroethane	10001320	HS205_00290B-09	1.6	U						10
cis-1,2-Dichloroethylene	10001320	HS205_00290B-09	1.4	U						11
Methyl ethyl ketone	10001320	HS205_00290B-09	13.0	U						12
Chloroform	10001320	HS205_00290B-09	1.6	U						13
1,1,1-Trichloroethane	10001320	HS205_00290B-09	13.0							14

Analyte	Container	Sample no	Concentration (ppm)	U	D	Z	J	E	B	Analyte Order
Cyclohexane	10001320	HS205_00290B-09	1.6				J			15
Carbon tetrachloride	10001320	HS205_00290B-09	2.6	U						16
Benzene	10001320	HS205_00290B-09	1.4	U						17
1,2-Dichloroethane	10001320	HS205_00290B-09	2.1	U						18
Trichloroethylene	10001320	HS205_00290B-09	13.0							19
Butanol	10001320	HS205_00290B-09	16.0	U						20
Methyl isobutyl ketone	10001320	HS205_00290B-09	10.0	U						21
Toluene	10001320	HS205_00290B-09	1.3	U						22
Tetrachloroethylene	10001320	HS205_00290B-09	1.5	U						23
Chlorobenzene	10001320	HS205_00290B-09	1.2	U						24
Ethyl benzene	10001320	HS205_00290B-09	1.0	U						25
m&p-Xylene	10001320	HS205_00290B-09	1.1	U						26
o-Xylene	10001320	HS205_00290B-09	1.5	U						27
Bromoform	10001320	HS205_00290B-09	1.2	U						28
1,1,2,2-Tetrachloroethane	10001320	HS205_00290B-09	1.0	U						29
1,3,5-Trimethylbenzene	10001320	HS205_00290B-09	0.9	U						30
1,2,4-Trimethylbenzene	10001320	HS205_00290B-09	0.6	U						31
Chloromethane	10016676	HS505_00081B-03	5.2	U						1
Methanol	10016676	HS505_00081B-03	72.0	U						2
Ethyl ether	10016676	HS505_00081B-03	4.6	U						3
1,1-Dichloroethylene	10016676	HS505_00081B-03	4.9	U						4
1,1,2-Trichloro-1,2,2-trifluoroethane	10016676	HS505_00081B-03	4.7	U						5
Acetone	10016676	HS505_00081B-03	51.0	U						6
Carbon disulfide	10016676	HS505_00081B-03	5.0	U						7
Methylene chloride	10016676	HS505_00081B-03	4.6	U						8
trans-1,2-Dichloroethylene	10016676	HS505_00081B-03	4.5	U						9
1,1-Dichloroethane	10016676	HS505_00081B-03	4.7	U						10
cis-1,2-Dichloroethylene	10016676	HS505_00081B-03	4.5	U						11
Methyl ethyl ketone	10016676	HS505_00081B-03	49.0	U						12
Chloroform	10016676	HS505_00081B-03	4.6	U						13
1,1,1-Trichloroethane	10016676	HS505_00081B-03	4.6	U						14
Cyclohexane	10016676	HS505_00081B-03	4.4	U						15
Carbon tetrachloride	10016676	HS505_00081B-03	4.9	U						16
Benzene	10016676	HS505_00081B-03	4.5	U						17
1,2-Dichloroethane	10016676	HS505_00081B-03	4.7	U						18
Trichloroethylene	10016676	HS505_00081B-03	4.6	U						19
Butanol	10016676	HS505_00081B-03	55.0	U						20
Methyl isobutyl ketone	10016676	HS505_00081B-03	39.0	U						21
Toluene	10016676	HS505_00081B-03	4.3				J			22
Tetrachloroethylene	10016676	HS505_00081B-03	3.7	U						23
Chlorobenzene	10016676	HS505_00081B-03	4.2	U						24
Ethyl benzene	10016676	HS505_00081B-03	4.3	U						25
m&p-Xylene	10016676	HS505_00081B-03	3.8	U						26
o-Xylene	10016676	HS505_00081B-03	4.4	U						27
Bromoform	10016676	HS505_00081B-03	4.0	U						28
1,1,2,2-Tetrachloroethane	10016676	HS505_00081B-03	4.7	U						29
1,3,5-Trimethylbenzene	10016676	HS505_00081B-03	4.6	U						30
1,2,4-Trimethylbenzene	10016676	HS505_00081B-03	4.7	U						31
Chloromethane	10016678	HS505_00086B-13	5.2	U						1
Methanol	10016678	HS505_00086B-13	72.0	U						2
Ethyl ether	10016678	HS505_00086B-13	4.6	U						3
1,1-Dichloroethylene	10016678	HS505_00086B-13	4.9	U						4
1,1,2-Trichloro-1,2,2-trifluoroethane	10016678	HS505_00086B-13	4.7	U						5
Acetone	10016678	HS505_00086B-13	51.0	U						6
Carbon disulfide	10016678	HS505_00086B-13	5.0	U						7
Methylene chloride	10016678	HS505_00086B-13	4.6	U						8
trans-1,2-Dichloroethylene	10016678	HS505_00086B-13	4.5	U						9
1,1-Dichloroethane	10016678	HS505_00086B-13	4.7	U						10
cis-1,2-Dichloroethylene	10016678	HS505_00086B-13	4.5	U						11
Methyl ethyl ketone	10016678	HS505_00086B-13	49.0	U						12
Chloroform	10016678	HS505_00086B-13	4.6	U						13
1,1,1-Trichloroethane	10016678	HS505_00086B-13	4.6	U						14
Cyclohexane	10016678	HS505_00086B-13	4.4	U						15
Carbon tetrachloride	10016678	HS505_00086B-13	4.9	U						16
Benzene	10016678	HS505_00086B-13	4.5	U						17
1,2-Dichloroethane	10016678	HS505_00086B-13	4.7	U						18
Trichloroethylene	10016678	HS505_00086B-13	4.6	U						19
Butanol	10016678	HS505_00086B-13	55.0	U						20
Methyl isobutyl ketone	10016678	HS505_00086B-13	39.0	U						21
Toluene	10016678	HS505_00086B-13	4.1	U						22
Tetrachloroethylene	10016678	HS505_00086B-13	3.7	U						23
Chlorobenzene	10016678	HS505_00086B-13	4.2	U						24
Ethyl benzene	10016678	HS505_00086B-13	4.3	U						25
m&p-Xylene	10016678	HS505_00086B-13	3.8	U						26
o-Xylene	10016678	HS505_00086B-13	4.4	U						27
Bromoform	10016678	HS505_00086B-13	4.0	U						28

Analyte	Container	Sample no	Concentration (ppm)	U	D	Z	J	E	B	Analyte Order
1,1,2,2-Tetrachloroethane	10016678	HS505_00086B-13	4.7	U						29
1,3,5-Trimethylbenzene	10016678	HS505_00086B-13	4.6	U						30
1,2,4-Trimethylbenzene	10016678	HS505_00086B-13	4.7	U						31
Chloromethane	10016727	HS505_00076C-07	5.2	U						1
Methanol	10016727	HS505_00076C-07	77.0				J			2
Ethyl ether	10016727	HS505_00076C-07	4.6	U						3
1,1-Dichloroethylene	10016727	HS505_00076C-07	4.9	U						4
1,1,2-Trichloro-1,2,2-trifluoroethane	10016727	HS505_00076C-07	4.7	U						5
Acetone	10016727	HS505_00076C-07	51.0	U						6
Carbon disulfide	10016727	HS505_00076C-07	5.0	U						7
Methylene chloride	10016727	HS505_00076C-07	4.6	U						8
trans-1,2-Dichloroethylene	10016727	HS505_00076C-07	4.5	U						9
1,1-Dichloroethane	10016727	HS505_00076C-07	4.7	U						10
cis-1,2-Dichloroethylene	10016727	HS505_00076C-07	4.5	U						11
Methyl ethyl ketone	10016727	HS505_00076C-07	49.0	U						12
Chloroform	10016727	HS505_00076C-07	4.6	U						13
1,1,1-Trichloroethane	10016727	HS505_00076C-07	29.0							14
Cyclohexane	10016727	HS505_00076C-07	4.4	U						15
Carbon tetrachloride	10016727	HS505_00076C-07	4.9	U						16
Benzene	10016727	HS505_00076C-07	4.5	U						17
1,2-Dichloroethane	10016727	HS505_00076C-07	4.7	U						18
Trichloroethylene	10016727	HS505_00076C-07	4.6	U						19
Butanol	10016727	HS505_00076C-07	55.0	U						20
Methyl isobutyl ketone	10016727	HS505_00076C-07	39.0	U						21
Toluene	10016727	HS505_00076C-07	4.1	U						22
Tetrachloroethylene	10016727	HS505_00076C-07	3.7	U						23
Chlorobenzene	10016727	HS505_00076C-07	4.2	U						24
Ethyl benzene	10016727	HS505_00076C-07	4.3	U						25
m&p-Xylene	10016727	HS505_00076C-07	3.8	U						26
o-Xylene	10016727	HS505_00076C-07	4.4	U						27
Bromoform	10016727	HS505_00076C-07	4.0	U						28
1,1,2,2-Tetrachloroethane	10016727	HS505_00076C-07	4.7	U						29
1,3,5-Trimethylbenzene	10016727	HS505_00076C-07	4.6	U						30
1,2,4-Trimethylbenzene	10016727	HS505_00076C-07	4.7	U						31
Chloromethane	10016731	HS205_00286B-05	3.2	U						1
Methanol	10016731	HS205_00286B-05	47.0	U						2
Ethyl ether	10016731	HS205_00286B-05	3.4	U						3
1,1-Dichloroethylene	10016731	HS205_00286B-05	2.5	U						4
1,1,2-Trichloro-1,2,2-trifluoroethane	10016731	HS205_00286B-05	3.3	U						5
Acetone	10016731	HS205_00286B-05	13.0	U						6
Carbon disulfide	10016731	HS205_00286B-05	2.5	U						7
Methylene chloride	10016731	HS205_00286B-05	1.5	U						8
trans-1,2-Dichloroethylene	10016731	HS205_00286B-05	1.2	U						9
1,1-Dichloroethane	10016731	HS205_00286B-05	1.6	U						10
cis-1,2-Dichloroethylene	10016731	HS205_00286B-05	1.4	U						11
Methyl ethyl ketone	10016731	HS205_00286B-05	13.0	U						12
Chloroform	10016731	HS205_00286B-05	1.6	U						13
1,1,1-Trichloroethane	10016731	HS205_00286B-05	2.2	U						14
Cyclohexane	10016731	HS205_00286B-05	1.3	U						15
Carbon tetrachloride	10016731	HS205_00286B-05	2.6	U						16
Benzene	10016731	HS205_00286B-05	1.4	U						17
1,2-Dichloroethane	10016731	HS205_00286B-05	2.1	U						18
Trichloroethylene	10016731	HS205_00286B-05	1.4	U						19
Butanol	10016731	HS205_00286B-05	16.0	U						20
Methyl isobutyl ketone	10016731	HS205_00286B-05	10.0	U						21
Toluene	10016731	HS205_00286B-05	2.8				J			22
Tetrachloroethylene	10016731	HS205_00286B-05	1.5	U						23
Chlorobenzene	10016731	HS205_00286B-05	1.2	U						24
Ethyl benzene	10016731	HS205_00286B-05	1.0	U						25
m&p-Xylene	10016731	HS205_00286B-05	1.1	U						26
o-Xylene	10016731	HS205_00286B-05	1.5	U						27
Bromoform	10016731	HS205_00286B-05	1.2	U						28
1,1,2,2-Tetrachloroethane	10016731	HS205_00286B-05	1.0	U						29
1,3,5-Trimethylbenzene	10016731	HS205_00286B-05	0.9	U						30
1,2,4-Trimethylbenzene	10016731	HS205_00286B-05	0.6	U						31
Chloromethane	10016741	HS505_00079B-21	5.2	U						1
Methanol	10016741	HS505_00079B-21	72.0	U						2
Ethyl ether	10016741	HS505_00079B-21	4.6	U						3
1,1-Dichloroethylene	10016741	HS505_00079B-21	12.0							4
1,1,2-Trichloro-1,2,2-trifluoroethane	10016741	HS505_00079B-21	4.7	U						5
Acetone	10016741	HS505_00079B-21	51.0	U						6
Carbon disulfide	10016741	HS505_00079B-21	5.0	U						7
Methylene chloride	10016741	HS505_00079B-21	4.6	U						8
trans-1,2-Dichloroethylene	10016741	HS505_00079B-21	4.5	U						9
1,1-Dichloroethane	10016741	HS505_00079B-21	4.7	U						10
cis-1,2-Dichloroethylene	10016741	HS505_00079B-21	4.5	U						11

Analyte	Container	Sample no.	Concentration (ppm)	U	D	Z	J	E	B	Analyte Order
Methyl ethyl ketone	10016741	HS505_00079B-21	49.0	U						12
Chloroform	10016741	HS505_00079B-21	4.6	U						13
1,1,1-Trichloroethane	10016741	HS505_00079B-21	59.0							14
Cyclohexane	10016741	HS505_00079B-21	4.4	U						15
Carbon tetrachloride	10016741	HS505_00079B-21	4.9	U						16
Benzene	10016741	HS505_00079B-21	4.5	U						17
1,2-Dichloroethane	10016741	HS505_00079B-21	4.7	U						18
Trichloroethylene	10016741	HS505_00079B-21	4.6	U						19
Butanol	10016741	HS505_00079B-21	55.0	U						20
Methyl isobutyl ketone	10016741	HS505_00079B-21	39.0	U						21
Toluene	10016741	HS505_00079B-21	23.0							22
Tetrachloroethylene	10016741	HS505_00079B-21	3.7	U						23
Chlorobenzene	10016741	HS505_00079B-21	4.2	U						24
Ethyl benzene	10016741	HS505_00079B-21	1500.0		D					25
m&p-Xylene	10016741	HS505_00079B-21	3700.0		D					26
o-Xylene	10016741	HS505_00079B-21	770.0		D					27
Bromoform	10016741	HS505_00079B-21	4.0	U						28
1,1,2,2-Tetrachloroethane	10016741	HS505_00079B-21	4.7	U						29
1,3,5-Trimethylbenzene	10016741	HS505_00079B-21	4.6	U						30
1,2,4-Trimethylbenzene	10016741	HS505_00079B-21	4.7	U						31
Chloromethane	10016745	HS505_00071B-04	5.2	U						1
Methanol	10016745	HS505_00071B-04	72.0	U						2
Ethyl ether	10016745	HS505_00071B-04	4.6	U						3
1,1-Dichloroethylene	10016745	HS505_00071B-04	4.9	U						4
1,1,2-Trichloro-1,2,2-trifluoroethane	10016745	HS505_00071B-04	4.7	U						5
Acetone	10016745	HS505_00071B-04	51.0	U						6
Carbon disulfide	10016745	HS505_00071B-04	5.0	U						7
Methylene chloride	10016745	HS505_00071B-04	4.6	U						8
trans-1,2-Dichloroethylene	10016745	HS505_00071B-04	4.5	U						9
1,1-Dichloroethane	10016745	HS505_00071B-04	4.7	U						10
cis-1,2-Dichloroethylene	10016745	HS505_00071B-04	4.5	U						11
Methyl ethyl ketone	10016745	HS505_00071B-04	49.0	U						12
Chloroform	10016745	HS505_00071B-04	4.6	U						13
1,1,1-Trichloroethane	10016745	HS505_00071B-04	29.0							14
Cyclohexane	10016745	HS505_00071B-04	4.4	U						15
Carbon tetrachloride	10016745	HS505_00071B-04	4.9	U						16
Benzene	10016745	HS505_00071B-04	4.5	U						17
1,2-Dichloroethane	10016745	HS505_00071B-04	4.7	U						18
Trichloroethylene	10016745	HS505_00071B-04	18.0							19
Butanol	10016745	HS505_00071B-04	55.0	U						20
Methyl isobutyl ketone	10016745	HS505_00071B-04	39.0	U						21
Toluene	10016745	HS505_00071B-04	4.1	U						22
Tetrachloroethylene	10016745	HS505_00071B-04	3.7	U						23
Chlorobenzene	10016745	HS505_00071B-04	4.2	U						24
Ethyl benzene	10016745	HS505_00071B-04	4.3	U						25
m&p-Xylene	10016745	HS505_00071B-04	3.8	U						26
o-Xylene	10016745	HS505_00071B-04	4.4	U						27
Bromoform	10016745	HS505_00071B-04	4.0	U						28
1,1,2,2-Tetrachloroethane	10016745	HS505_00071B-04	4.7	U						29
1,3,5-Trimethylbenzene	10016745	HS505_00071B-04	4.6	U						30
1,2,4-Trimethylbenzene	10016745	HS505_00071B-04	4.7	U						31
Chloromethane	10016821	HS505_00081B-04	5.2	U						1
Methanol	10016821	HS505_00081B-04	72.0	U						2
Ethyl ether	10016821	HS505_00081B-04	4.6	U						3
1,1-Dichloroethylene	10016821	HS505_00081B-04	4.9	U						4
1,1,2-Trichloro-1,2,2-trifluoroethane	10016821	HS505_00081B-04	4.7	U						5
Acetone	10016821	HS505_00081B-04	51.0	U						6
Carbon disulfide	10016821	HS505_00081B-04	5.0	U						7
Methylene chloride	10016821	HS505_00081B-04	4.6	U						8
trans-1,2-Dichloroethylene	10016821	HS505_00081B-04	4.5	U						9
1,1-Dichloroethane	10016821	HS505_00081B-04	4.7	U						10
cis-1,2-Dichloroethylene	10016821	HS505_00081B-04	4.5	U						11
Methyl ethyl ketone	10016821	HS505_00081B-04	49.0	U						12
Chloroform	10016821	HS505_00081B-04	4.6	U						13
1,1,1-Trichloroethane	10016821	HS505_00081B-04	8.2				J			14
Cyclohexane	10016821	HS505_00081B-04	4.4	U						15
Carbon tetrachloride	10016821	HS505_00081B-04	4.9	U						16
Benzene	10016821	HS505_00081B-04	4.5	U						17
1,2-Dichloroethane	10016821	HS505_00081B-04	4.7	U						18
Trichloroethylene	10016821	HS505_00081B-04	26.0							19
Butanol	10016821	HS505_00081B-04	55.0	U						20
Methyl isobutyl ketone	10016821	HS505_00081B-04	39.0	U						21
Toluene	10016821	HS505_00081B-04	4.1	U						22
Tetrachloroethylene	10016821	HS505_00081B-04	3.7	U						23
Chlorobenzene	10016821	HS505_00081B-04	4.2	U						24
Ethyl benzene	10016821	HS505_00081B-04	4.3	U						25

Analyte	Container	Sample no	Concentration (ppm)	U	D	Z	J	E	B	Analyte Order
m&p-Xylene	10016821	HS505_00081B-04	3.8	U						26
o-Xylene	10016821	HS505_00081B-04	4.4	U						27
Bromoform	10016821	HS505_00081B-04	4.0	U						28
1,1,2,2-Tetrachloroethane	10016821	HS505_00081B-04	4.7	U						29
1,3,5-Trimethylbenzene	10016821	HS505_00081B-04	4.6	U						30
1,2,4-Trimethylbenzene	10016821	HS505_00081B-04	4.7	U						31
Chloromethane	10016827	HS505_00081B-10	5.2	U						1
Methanol	10016827	HS505_00081B-10	72.0	U						2
Ethyl ether	10016827	HS505_00081B-10	4.6	U						3
1,1-Dichloroethylene	10016827	HS505_00081B-10	4.9	U						4
1,1,2-Trichloro-1,2,2-trifluoroethane	10016827	HS505_00081B-10	4.7	U						5
Acetone	10016827	HS505_00081B-10	51.0	U						6
Carbon disulfide	10016827	HS505_00081B-10	5.0	U						7
Methylene chloride	10016827	HS505_00081B-10	4.6	U						8
trans-1,2-Dichloroethylene	10016827	HS505_00081B-10	4.5	U						9
1,1-Dichloroethane	10016827	HS505_00081B-10	4.7	U						10
cis-1,2-Dichloroethylene	10016827	HS505_00081B-10	4.5	U						11
Methyl ethyl ketone	10016827	HS505_00081B-10	49.0	U						12
Chloroform	10016827	HS505_00081B-10	4.6	U						13
1,1,1-Trichloroethane	10016827	HS505_00081B-10	4.6	U						14
Cyclohexane	10016827	HS505_00081B-10	4.4	U						15
Carbon tetrachloride	10016827	HS505_00081B-10	4.9	U						16
Benzene	10016827	HS505_00081B-10	4.5	U						17
1,2-Dichloroethane	10016827	HS505_00081B-10	4.7	U						18
Trichloroethylene	10016827	HS505_00081B-10	4.6	U						19
Butanol	10016827	HS505_00081B-10	55.0	U						20
Methyl isobutyl ketone	10016827	HS505_00081B-10	39.0	U						21
Toluene	10016827	HS505_00081B-10	4.1	U						22
Tetrachloroethylene	10016827	HS505_00081B-10	3.7	U						23
Chlorobenzene	10016827	HS505_00081B-10	4.2	U						24
Ethyl benzene	10016827	HS505_00081B-10	4.3	U						25
m&p-Xylene	10016827	HS505_00081B-10	3.8	U						26
o-Xylene	10016827	HS505_00081B-10	4.4	U						27
Bromoform	10016827	HS505_00081B-10	4.0	U						28
1,1,2,2-Tetrachloroethane	10016827	HS505_00081B-10	4.7	U						29
1,3,5-Trimethylbenzene	10016827	HS505_00081B-10	4.6	U						30
1,2,4-Trimethylbenzene	10016827	HS505_00081B-10	4.7	U						31
Chloromethane	10016830	HS205_00294B-17	3.2	U						1
Methanol	10016830	HS205_00294B-17	50.0				J			2
Ethyl ether	10016830	HS205_00294B-17	3.4	U						3
1,1-Dichloroethylene	10016830	HS205_00294B-17	2.5	U						4
1,1,2-Trichloro-1,2,2-trifluoroethane	10016830	HS205_00294B-17	3.3	U						5
Acetone	10016830	HS205_00294B-17	13.0	U						6
Carbon disulfide	10016830	HS205_00294B-17	2.5	U						7
Methylene chloride	10016830	HS205_00294B-17	1.5	U						8
trans-1,2-Dichloroethylene	10016830	HS205_00294B-17	1.2	U						9
1,1-Dichloroethane	10016830	HS205_00294B-17	1.6	U						10
cis-1,2-Dichloroethylene	10016830	HS205_00294B-17	1.4	U						11
Methyl ethyl ketone	10016830	HS205_00294B-17	13.0	U						12
Chloroform	10016830	HS205_00294B-17	1.6	U						13
1,1,1-Trichloroethane	10016830	HS205_00294B-17	2.2	U						14
Cyclohexane	10016830	HS205_00294B-17	1.3	U						15
Carbon tetrachloride	10016830	HS205_00294B-17	2.6	U						16
Benzene	10016830	HS205_00294B-17	1.4	U						17
1,2-Dichloroethane	10016830	HS205_00294B-17	2.1	U						18
Trichloroethylene	10016830	HS205_00294B-17	1.4	U						19
Butanol	10016830	HS205_00294B-17	16.0	U						20
Methyl isobutyl ketone	10016830	HS205_00294B-17	10.0	U						21
Toluene	10016830	HS205_00294B-17	14.0							22
Tetrachloroethylene	10016830	HS205_00294B-17	1.5	U						23
Chlorobenzene	10016830	HS205_00294B-17	1.2	U						24
Ethyl benzene	10016830	HS205_00294B-17	920.0		D					25
m&p-Xylene	10016830	HS205_00294B-17	2600.0		D					26
o-Xylene	10016830	HS205_00294B-17	430.0		D					27
Bromoform	10016830	HS205_00294B-17	1.2	U						28
1,1,2,2-Tetrachloroethane	10016830	HS205_00294B-17	1.0	U						29
1,3,5-Trimethylbenzene	10016830	HS205_00294B-17	0.9	U						30
1,2,4-Trimethylbenzene	10016830	HS205_00294B-17	0.8	U						31
Chloromethane	10016834	HS505_00072B-01	5.2	U						1
Methanol	10016834	HS505_00072B-01	560.0							2
Ethyl ether	10016834	HS505_00072B-01	4.6	U						3
1,1-Dichloroethylene	10016834	HS505_00072B-01	4.9	U						4
1,1,2-Trichloro-1,2,2-trifluoroethane	10016834	HS505_00072B-01	4.7	U						5
Acetone	10016834	HS505_00072B-01	51.0	U						6
Carbon disulfide	10016834	HS505_00072B-01	5.0	U						7
Methylene chloride	10016834	HS505_00072B-01	4.6	U						8

Analyte	Container	Sample no.	Concentration (ppm)	U	D	Z	J	E	B	Analyte Order
trans-1,2-Dichloroethylene	10016834	HS505_00072B-01	4.5	U						9
1,1-Dichloroethane	10016834	HS505_00072B-01	4.7	U						10
cis-1,2-Dichloroethylene	10016834	HS505_00072B-01	4.5	U						11
Methyl ethyl ketone	10016834	HS505_00072B-01	49.0	U						12
Chloroform	10016834	HS505_00072B-01	4.6	U						13
1,1,1-Trichloroethane	10016834	HS505_00072B-01	4.6	U						14
Cyclohexane	10016834	HS505_00072B-01	4.4	U						15
Carbon tetrachloride	10016834	HS505_00072B-01	4.9	U						16
Benzene	10016834	HS505_00072B-01	4.5	U						17
1,2-Dichloroethane	10016834	HS505_00072B-01	4.7	U						18
Trichloroethylene	10016834	HS505_00072B-01	4.6	U						19
Butanol	10016834	HS505_00072B-01	55.0	U						20
Methyl isobutyl ketone	10016834	HS505_00072B-01	39.0	U						21
Toluene	10016834	HS505_00072B-01	4.1	U						22
Tetrachloroethylene	10016834	HS505_00072B-01	3.7	U						23
Chlorobenzene	10016834	HS505_00072B-01	4.2	U						24
Ethyl benzene	10016834	HS505_00072B-01	4.3	U						25
m&p-Xylene	10016834	HS505_00072B-01	3.8	U						26
o-Xylene	10016834	HS505_00072B-01	4.4	U						27
Bromoform	10016834	HS505_00072B-01	4.0	U						28
1,1,2,2-Tetrachloroethane	10016834	HS505_00072B-01	4.7	U						29
1,3,5-Trimethylbenzene	10016834	HS505_00072B-01	4.6	U						30
1,2,4-Trimethylbenzene	10016834	HS505_00072B-01	4.7	U						31
Chloromethane	10016835	HS505_00081B-20	5.2	U						1
Methanol	10016835	HS505_00081B-20	690.0							2
Ethyl ether	10016835	HS505_00081B-20	4.6	U						3
1,1-Dichloroethylene	10016835	HS505_00081B-20	4.9	U						4
1,1,2-Trichloro-1,2,2-trifluoroethane	10016835	HS505_00081B-20	4.7	U						5
Acetone	10016835	HS505_00081B-20	51.0	U						6
Carbon disulfide	10016835	HS505_00081B-20	5.0	U						7
Methylene chloride	10016835	HS505_00081B-20	4.6	U						8
trans-1,2-Dichloroethylene	10016835	HS505_00081B-20	4.5	U						9
1,1-Dichloroethane	10016835	HS505_00081B-20	4.7	U						10
cis-1,2-Dichloroethylene	10016835	HS505_00081B-20	4.5	U						11
Methyl ethyl ketone	10016835	HS505_00081B-20	49.0	U						12
Chloroform	10016835	HS505_00081B-20	4.6	U						13
1,1,1-Trichloroethane	10016835	HS505_00081B-20	4.6	U						14
Cyclohexane	10016835	HS505_00081B-20	370.0		D					15
Carbon tetrachloride	10016835	HS505_00081B-20	4.9	U						16
Benzene	10016835	HS505_00081B-20	4.5	U						17
1,2-Dichloroethane	10016835	HS505_00081B-20	4.7	U						18
Trichloroethylene	10016835	HS505_00081B-20	4.6	U						19
Butanol	10016835	HS505_00081B-20	55.0	U						20
Methyl isobutyl ketone	10016835	HS505_00081B-20	39.0	U						21
Toluene	10016835	HS505_00081B-20	4.1	U						22
Tetrachloroethylene	10016835	HS505_00081B-20	3.7	U						23
Chlorobenzene	10016835	HS505_00081B-20	4.2	U						24
Ethyl benzene	10016835	HS505_00081B-20	4.3	U						25
m&p-Xylene	10016835	HS505_00081B-20	3.8	U						26
o-Xylene	10016835	HS505_00081B-20	4.4	U						27
Bromoform	10016835	HS505_00081B-20	4.0	U						28
1,1,2,2-Tetrachloroethane	10016835	HS505_00081B-20	4.7	U						29
1,3,5-Trimethylbenzene	10016835	HS505_00081B-20	4.6	U						30
1,2,4-Trimethylbenzene	10016835	HS505_00081B-20	4.7	U						31
Chloromethane	10016836	HS505_00074B-16	5.2	U						1
Methanol	10016836	HS505_00074B-16	900.0							2
Ethyl ether	10016836	HS505_00074B-16	4.6	U						3
1,1-Dichloroethylene	10016836	HS505_00074B-16	4.9	U						4
1,1,2-Trichloro-1,2,2-trifluoroethane	10016836	HS505_00074B-16	4.7	U						5
Acetone	10016836	HS505_00074B-16	51.0	U						6
Carbon disulfide	10016836	HS505_00074B-16	5.0	U						7
Methylene chloride	10016836	HS505_00074B-16	4.6	U						8
trans-1,2-Dichloroethylene	10016836	HS505_00074B-16	4.5	U						9
1,1-Dichloroethane	10016836	HS505_00074B-16	4.7	U						10
cis-1,2-Dichloroethylene	10016836	HS505_00074B-16	4.5	U						11
Methyl ethyl ketone	10016836	HS505_00074B-16	49.0	U						12
Chloroform	10016836	HS505_00074B-16	4.6	U						13
1,1,1-Trichloroethane	10016836	HS505_00074B-16	4.6	U						14
Cyclohexane	10016836	HS505_00074B-16	4.4	U						15
Carbon tetrachloride	10016836	HS505_00074B-16	4.9	U						16
Benzene	10016836	HS505_00074B-16	4.5	U						17
1,2-Dichloroethane	10016836	HS505_00074B-16	4.7	U						18
Trichloroethylene	10016836	HS505_00074B-16	4.6	U						19
Butanol	10016836	HS505_00074B-16	55.0	U						20
Methyl isobutyl ketone	10016836	HS505_00074B-16	39.0	U						21
Toluene	10016836	HS505_00074B-16	4.1	U						22

Analyte	Container	Sample no	Concentration (ppm)	U	D	Z	J	E	B	Analyte Order
Tetrachloroethylene	10016836	HS505_00074B-16	3.7	U						23
Chlorobenzene	10016836	HS505_00074B-16	4.2	U						24
Ethyl benzene	10016836	HS505_00074B-16	4.3	U						25
m&p-Xylene	10016836	HS505_00074B-16	3.8	U						26
o-Xylene	10016836	HS505_00074B-16	4.4	U						27
Bromoform	10016836	HS505_00074B-16	4.0	U						28
1,1,2,2-Tetrachloroethane	10016836	HS505_00074B-16	4.7	U						29
1,3,5-Trimethylbenzene	10016836	HS505_00074B-16	4.6	U						30
1,2,4-Trimethylbenzene	10016836	HS505_00074B-16	4.7	U						31
Chloromethane	10016837	HS505_00083B-18	5.2	U						1
Methanol	10016837	HS505_00083B-18	72.0	U						2
Ethyl ether	10016837	HS505_00083B-18	4.6	U						3
1,1-Dichloroethylene	10016837	HS505_00083B-18	4.9	U						4
1,1,2-Trichloro-1,2,2-trifluoroethane	10016837	HS505_00083B-18	4.7	U						5
Acetone	10016837	HS505_00083B-18	51.0	U						6
Carbon disulfide	10016837	HS505_00083B-18	5.0	U						7
Methylene chloride	10016837	HS505_00083B-18	4.6	U						8
trans-1,2-Dichloroethylene	10016837	HS505_00083B-18	4.5	U						9
1,1-Dichloroethane	10016837	HS505_00083B-18	4.7	U						10
cis-1,2-Dichloroethylene	10016837	HS505_00083B-18	4.5	U						11
Methyl ethyl ketone	10016837	HS505_00083B-18	49.0	U						12
Chloroform	10016837	HS505_00083B-18	4.6	U						13
1,1,1-Trichloroethane	10016837	HS505_00083B-18	4.6	U						14
Cyclohexane	10016837	HS505_00083B-18	8.3				J			15
Carbon tetrachloride	10016837	HS505_00083B-18	4.9	U						16
Benzene	10016837	HS505_00083B-18	4.5	U						17
1,2-Dichloroethane	10016837	HS505_00083B-18	4.7	U						18
Trichloroethylene	10016837	HS505_00083B-18	4.6	U						19
Butanol	10016837	HS505_00083B-18	55.0	U						20
Methyl isobutyl ketone	10016837	HS505_00083B-18	39.0	U						21
Toluene	10016837	HS505_00083B-18	4.1	U						22
Tetrachloroethylene	10016837	HS505_00083B-18	3.7	U						23
Chlorobenzene	10016837	HS505_00083B-18	4.2	U						24
Ethyl benzene	10016837	HS505_00083B-18	4.3	U						25
m&p-Xylene	10016837	HS505_00083B-18	3.8	U						26
o-Xylene	10016837	HS505_00083B-18	4.4	U						27
Bromoform	10016837	HS505_00083B-18	4.0	U						28
1,1,2,2-Tetrachloroethane	10016837	HS505_00083B-18	4.7	U						29
1,3,5-Trimethylbenzene	10016837	HS505_00083B-18	4.6	U						30
1,2,4-Trimethylbenzene	10016837	HS505_00083B-18	4.7	U						31
Chloromethane	10016838	HS505_00080B-14	5.2	U						1
Methanol	10016838	HS505_00080B-14	170.0							2
Ethyl ether	10016838	HS505_00080B-14	4.6	U						3
1,1-Dichloroethylene	10016838	HS505_00080B-14	4.9	U						4
1,1,2-Trichloro-1,2,2-trifluoroethane	10016838	HS505_00080B-14	4.7	U						5
Acetone	10016838	HS505_00080B-14	51.0	U						6
Carbon disulfide	10016838	HS505_00080B-14	5.0	U						7
Methylene chloride	10016838	HS505_00080B-14	4.6	U						8
trans-1,2-Dichloroethylene	10016838	HS505_00080B-14	4.5	U						9
1,1-Dichloroethane	10016838	HS505_00080B-14	4.7	U						10
cis-1,2-Dichloroethylene	10016838	HS505_00080B-14	4.5	U						11
Methyl ethyl ketone	10016838	HS505_00080B-14	49.0	U						12
Chloroform	10016838	HS505_00080B-14	4.6	U						13
1,1,1-Trichloroethane	10016838	HS505_00080B-14	4.6	U						14
Cyclohexane	10016838	HS505_00080B-14	4.4	U						15
Carbon tetrachloride	10016838	HS505_00080B-14	4.9	U						16
Benzene	10016838	HS505_00080B-14	4.5	U						17
1,2-Dichloroethane	10016838	HS505_00080B-14	4.7	U						18
Trichloroethylene	10016838	HS505_00080B-14	4.6	U						19
Butanol	10016838	HS505_00080B-14	55.0	U						20
Methyl isobutyl ketone	10016838	HS505_00080B-14	39.0	U						21
Toluene	10016838	HS505_00080B-14	4.1	U						22
Tetrachloroethylene	10016838	HS505_00080B-14	3.7	U						23
Chlorobenzene	10016838	HS505_00080B-14	4.2	U						24
Ethyl benzene	10016838	HS505_00080B-14	4.3	U						25
m&p-Xylene	10016838	HS505_00080B-14	3.8	U						26
o-Xylene	10016838	HS505_00080B-14	4.4	U						27
Bromoform	10016838	HS505_00080B-14	4.0	U						28
1,1,2,2-Tetrachloroethane	10016838	HS505_00080B-14	4.7	U						29
1,3,5-Trimethylbenzene	10016838	HS505_00080B-14	4.6	U						30
1,2,4-Trimethylbenzene	10016838	HS505_00080B-14	4.7	U						31
Chloromethane	10017120	HS505_00081B-09	5.2	U						1
Methanol	10017120	HS505_00081B-09	72.0	U						2
Ethyl ether	10017120	HS505_00081B-09	4.6	U						3
1,1-Dichloroethylene	10017120	HS505_00081B-09	4.9	U						4
1,1,2-Trichloro-1,2,2-trifluoroethane	10017120	HS505_00081B-09	4.7	U						5

Analyte	Container	Sample no	Concentration (ppm)	U	D	Z	J	E	B	Analyte Order
Acetone	10017120	HS505_00081B-09	51.0	U						6
Carbon disulfide	10017120	HS505_00081B-09	5.0	U						7
Methylene chloride	10017120	HS505_00081B-09	4.6	U						8
trans-1,2-Dichloroethylene	10017120	HS505_00081B-09	4.5	U						9
1,1-Dichloroethane	10017120	HS505_00081B-09	4.7	U						10
cis-1,2-Dichloroethylene	10017120	HS505_00081B-09	4.5	U						11
Methyl ethyl ketone	10017120	HS505_00081B-09	49.0	U						12
Chloroform	10017120	HS505_00081B-09	4.6	U						13
1,1,1-Trichloroethane	10017120	HS505_00081B-09	4.6	U						14
Cyclohexane	10017120	HS505_00081B-09	4.4	U						15
Carbon tetrachloride	10017120	HS505_00081B-09	4.9	U						16
Benzene	10017120	HS505_00081B-09	4.5	U						17
1,2-Dichloroethane	10017120	HS505_00081B-09	4.7	U						18
Trichloroethylene	10017120	HS505_00081B-09	4.6	U						19
Butanol	10017120	HS505_00081B-09	55.0	U						20
Methyl isobutyl ketone	10017120	HS505_00081B-09	39.0	U						21
Toluene	10017120	HS505_00081B-09	4.1	U						22
Tetrachloroethylene	10017120	HS505_00081B-09	3.7	U						23
Chlorobenzene	10017120	HS505_00081B-09	4.2	U						24
Ethyl benzene	10017120	HS505_00081B-09	4.3	U						25
m&p-Xylene	10017120	HS505_00081B-09	3.8	U						26
o-Xylene	10017120	HS505_00081B-09	4.4	U						27
Bromoform	10017120	HS505_00081B-09	4.0	U						28
1,1,2,2-Tetrachloroethane	10017120	HS505_00081B-09	4.7	U						29
1,3,5-Trimethylbenzene	10017120	HS505_00081B-09	4.6	U						30
1,2,4-Trimethylbenzene	10017120	HS505_00081B-09	4.7	U						31
Chloromethane	10017121	HS105_00172B-18	2.5	U						1
Methanol	10017121	HS105_00172B-18	73.0	U						2
Ethyl ether	10017121	HS105_00172B-18	2.5	U						3
1,1-Dichloroethylene	10017121	HS105_00172B-18	2.7	U						4
1,1,2-Trichloro-1,2,2-trifluoroethane	10017121	HS105_00172B-18	2.8	U						5
Acetone	10017121	HS105_00172B-18	13.0	U						6
Carbon disulfide	10017121	HS105_00172B-18	2.8	U						7
Methylene chloride	10017121	HS105_00172B-18	1.6	U						8
trans-1,2-Dichloroethylene	10017121	HS105_00172B-18	1.4	U						9
1,1-Dichloroethane	10017121	HS105_00172B-18	1.5	U						10
cis-1,2-Dichloroethylene	10017121	HS105_00172B-18	1.5	U						11
Methyl ethyl ketone	10017121	HS105_00172B-18	16.0	U						12
Chloroform	10017121	HS105_00172B-18	1.3	U						13
1,1,1-Trichloroethane	10017121	HS105_00172B-18	1.7	U						14
Cyclohexane	10017121	HS105_00172B-18	1.2	U						15
Carbon tetrachloride	10017121	HS105_00172B-18	1.9	U						16
Benzene	10017121	HS105_00172B-18	1.2	U						17
1,2-Dichloroethane	10017121	HS105_00172B-18	1.7	U						18
Trichloroethylene	10017121	HS105_00172B-18	1.6	U						19
Butanol	10017121	HS105_00172B-18	47.0	U						20
Methyl isobutyl ketone	10017121	HS105_00172B-18	30.0	U						21
Toluene	10017121	HS105_00172B-18	1.4	U						22
Tetrachloroethylene	10017121	HS105_00172B-18	1.3	U						23
Chlorobenzene	10017121	HS105_00172B-18	1.4	J						24
Ethyl benzene	10017121	HS105_00172B-18	1.5	J						25
m&p-Xylene	10017121	HS105_00172B-18	1.3	U						26
o-Xylene	10017121	HS105_00172B-18	1.5	U						27
Bromoform	10017121	HS105_00172B-18	1.3	U						28
1,1,2,2-Tetrachloroethane	10017121	HS105_00172B-18	1.2	U						29
1,3,5-Trimethylbenzene	10017121	HS105_00172B-18	1.3	U						30
1,2,4-Trimethylbenzene	10017121	HS105_00172B-18	1.2	U						31
Chloromethane	10017152	HS505_00086B-08	5.2	U						1
Methanol	10017152	HS505_00086B-08	600.0							2
Ethyl ether	10017152	HS505_00086B-08	4.6	U						3
1,1-Dichloroethylene	10017152	HS505_00086B-08	4.9	U						4
1,1,2-Trichloro-1,2,2-trifluoroethane	10017152	HS505_00086B-08	4.7	U						5
Acetone	10017152	HS505_00086B-08	51.0	U						6
Carbon disulfide	10017152	HS505_00086B-08	5.0	U						7
Methylene chloride	10017152	HS505_00086B-08	4.6	U						8
trans-1,2-Dichloroethylene	10017152	HS505_00086B-08	4.5	U						9
1,1-Dichloroethane	10017152	HS505_00086B-08	4.7	U						10
cis-1,2-Dichloroethylene	10017152	HS505_00086B-08	4.5	U						11
Methyl ethyl ketone	10017152	HS505_00086B-08	49.0	U						12
Chloroform	10017152	HS505_00086B-08	4.6	U						13
1,1,1-Trichloroethane	10017152	HS505_00086B-08	4.6	U						14
Cyclohexane	10017152	HS505_00086B-08	4.4	U						15
Carbon tetrachloride	10017152	HS505_00086B-08	4.9	U						16
Benzene	10017152	HS505_00086B-08	4.5	U						17
1,2-Dichloroethane	10017152	HS505_00086B-08	4.7	U						18
Trichloroethylene	10017152	HS505_00086B-08	4.6	U						19

Analyte	Container	Sample no.	Concentration (ppm)	U	D	Z	J	E	B	Analyte Order
Butanol	10017152	HS505_00086B-08	55.0	U						20
Methyl isobutyl ketone	10017152	HS505_00086B-08	39.0	U						21
Toluene	10017152	HS505_00086B-08	4.1	U						22
Tetrachloroethylene	10017152	HS505_00086B-08	3.7	U						23
Chlorobenzene	10017152	HS505_00086B-08	4.2	U						24
Ethyl benzene	10017152	HS505_00086B-08	4.3	U						25
m&p-Xylene	10017152	HS505_00086B-08	3.8	U						26
o-Xylene	10017152	HS505_00086B-08	4.4	U						27
Bromoform	10017152	HS505_00086B-08	4.0	U						28
1,1,2,2-Tetrachloroethane	10017152	HS505_00086B-08	4.7	U						29
1,3,5-Trimethylbenzene	10017152	HS505_00086B-08	4.6	U						30
1,2,4-Trimethylbenzene	10017152	HS505_00086B-08	4.7	U						31
Chloromethane	10017155	HS205_00171B-11	3.7	U						1
Methanol	10017155	HS205_00171B-11	250.0							2
Ethyl ether	10017155	HS205_00171B-11	3.8	U						3
1,1-Dichloroethylene	10017155	HS205_00171B-11	3.7	U						4
1,1,2-Trichloro-1,2,2-trifluoroethane	10017155	HS205_00171B-11	4.0	U						5
Acetone	10017155	HS205_00171B-11	37.0	U						6
Carbon disulfide	10017155	HS205_00171B-11	3.7	U						7
Methylene chloride	10017155	HS205_00171B-11	3.4	U						8
trans-1,2-Dichloroethylene	10017155	HS205_00171B-11	3.6	U						9
1,1-Dichloroethane	10017155	HS205_00171B-11	3.5	U						10
cis-1,2-Dichloroethylene	10017155	HS205_00171B-11	3.6	U						11
Methyl ethyl ketone	10017155	HS205_00171B-11	34.0	U						12
Chloroform	10017155	HS205_00171B-11	3.7	U						13
1,1,1-Trichloroethane	10017155	HS205_00171B-11	52.0							14
Cyclohexane	10017155	HS205_00171B-11	3.8	U						15
Carbon tetrachloride	10017155	HS205_00171B-11	5.1	U						16
Benzene	10017155	HS205_00171B-11	3.6	U						17
1,2-Dichloroethane	10017155	HS205_00171B-11	4.3	U						18
Trichloroethylene	10017155	HS205_00171B-11	3.4	U						19
Butanol	10017155	HS205_00171B-11	41.0	U						20
Methyl isobutyl ketone	10017155	HS205_00171B-11	38.0	U						21
Toluene	10017155	HS205_00171B-11	3.7	U						22
Tetrachloroethylene	10017155	HS205_00171B-11	3.5	U						23
Chlorobenzene	10017155	HS205_00171B-11	3.5	U						24
Ethyl benzene	10017155	HS205_00171B-11	3.8	U						25
m&p-Xylene	10017155	HS205_00171B-11	3.2	U						26
o-Xylene	10017155	HS205_00171B-11	3.5	U						27
Bromoform	10017155	HS205_00171B-11	3.5	U						28
1,1,2,2-Tetrachloroethane	10017155	HS205_00171B-11	3.4	U						29
1,3,5-Trimethylbenzene	10017155	HS205_00171B-11	3.5	U						30
1,2,4-Trimethylbenzene	10017155	HS205_00171B-11	3.8	U						31
Chloromethane	10017158	HS505_00075B-09	5.2	U						1
Methanol	10017158	HS505_00075B-09	270.0							2
Ethyl ether	10017158	HS505_00075B-09	4.6	U						3
1,1-Dichloroethylene	10017158	HS505_00075B-09	4.9	U						4
1,1,2-Trichloro-1,2,2-trifluoroethane	10017158	HS505_00075B-09	4.7	U						5
Acetone	10017158	HS505_00075B-09	51.0	U						6
Carbon disulfide	10017158	HS505_00075B-09	5.0	U						7
Methylene chloride	10017158	HS505_00075B-09	4.6	U						8
trans-1,2-Dichloroethylene	10017158	HS505_00075B-09	4.5	U						9
1,1-Dichloroethane	10017158	HS505_00075B-09	4.7	U						10
cis-1,2-Dichloroethylene	10017158	HS505_00075B-09	4.5	U						11
Methyl ethyl ketone	10017158	HS505_00075B-09	49.0	U						12
Chloroform	10017158	HS505_00075B-09	4.6	U						13
1,1,1-Trichloroethane	10017158	HS505_00075B-09	4.6	U						14
Cyclohexane	10017158	HS505_00075B-09	4.4	U						15
Carbon tetrachloride	10017158	HS505_00075B-09	4.9	U						16
Benzene	10017158	HS505_00075B-09	4.5	U						17
1,2-Dichloroethane	10017158	HS505_00075B-09	4.7	U						18
Trichloroethylene	10017158	HS505_00075B-09	4.6	U						19
Butanol	10017158	HS505_00075B-09	55.0	U						20
Methyl isobutyl ketone	10017158	HS505_00075B-09	39.0	U						21
Toluene	10017158	HS505_00075B-09	4.1	U						22
Tetrachloroethylene	10017158	HS505_00075B-09	3.7	U						23
Chlorobenzene	10017158	HS505_00075B-09	4.2	U						24
Ethyl benzene	10017158	HS505_00075B-09	4.3	U						25
m&p-Xylene	10017158	HS505_00075B-09	3.8	U						26
o-Xylene	10017158	HS505_00075B-09	4.4	U						27
Bromoform	10017158	HS505_00075B-09	4.0	U						28
1,1,2,2-Tetrachloroethane	10017158	HS505_00075B-09	4.7	U						29
1,3,5-Trimethylbenzene	10017158	HS505_00075B-09	4.6	U						30
1,2,4-Trimethylbenzene	10017158	HS505_00075B-09	4.7	U						31
Chloromethane	10017160	HS505_00086B-06	5.2	U						1
Methanol	10017160	HS505_00086B-06	220.0							2

Analyte	Container	Sample no	Concentration (ppm)	U	D	Z	J	E	B	Analyte Order
Ethyl ether	10017160	HS505_00086B-06	4.6	U						3
1,1-Dichloroethylene	10017160	HS505_00086B-06	4.9	U						4
1,1,2-Trichloro-1,2,2-trifluoroethane	10017160	HS505_00086B-06	4.7	U						5
Acetone	10017160	HS505_00086B-06	51.0	U						6
Carbon disulfide	10017160	HS505_00086B-06	5.0	U						7
Methylene chloride	10017160	HS505_00086B-06	4.6	U						8
trans-1,2-Dichloroethylene	10017160	HS505_00086B-06	4.5	U						9
1,1-Dichloroethane	10017160	HS505_00086B-06	4.7	U						10
cis-1,2-Dichloroethylene	10017160	HS505_00086B-06	4.5	U						11
Methyl ethyl ketone	10017160	HS505_00086B-06	49.0	U						12
Chloroform	10017160	HS505_00086B-06	4.6	U						13
1,1,1-Trichloroethane	10017160	HS505_00086B-06	4.6	U						14
Cyclohexane	10017160	HS505_00086B-06	4.4	U						15
Carbon tetrachloride	10017160	HS505_00086B-06	4.9	U						16
Benzene	10017160	HS505_00086B-06	4.5	U						17
1,2-Dichloroethane	10017160	HS505_00086B-06	4.7	U						18
Trichloroethylene	10017160	HS505_00086B-06	4.6	U						19
Butanol	10017160	HS505_00086B-06	55.0	U						20
Methyl isobutyl ketone	10017160	HS505_00086B-06	39.0	U						21
Toluene	10017160	HS505_00086B-06	4.1	U						22
Tetrachloroethylene	10017160	HS505_00086B-06	3.7	U						23
Chlorobenzene	10017160	HS505_00086B-06	4.2	U						24
Ethyl benzene	10017160	HS505_00086B-06	4.3	U						25
m&p-Xylene	10017160	HS505_00086B-06	3.8	U						26
o-Xylene	10017160	HS505_00086B-06	4.4	U						27
Bromoform	10017160	HS505_00086B-06	4.0	U						28
1,1,2,2-Tetrachloroethane	10017160	HS505_00086B-06	4.7	U						29
1,3,5-Trimethylbenzene	10017160	HS505_00086B-06	4.6	U						30
1,2,4-Trimethylbenzene	10017160	HS505_00086B-06	4.7	U						31
Chloromethane	10017162	HS505_00073B-09	5.2	U						1
Methanol	10017162	HS505_00073B-09	72.0	U						2
Ethyl ether	10017162	HS505_00073B-09	4.6	U						3
1,1-Dichloroethylene	10017162	HS505_00073B-09	4.9	U						4
1,1,2-Trichloro-1,2,2-trifluoroethane	10017162	HS505_00073B-09	4.7	U						5
Acetone	10017162	HS505_00073B-09	51.0	U						6
Carbon disulfide	10017162	HS505_00073B-09	5.0	U						7
Methylene chloride	10017162	HS505_00073B-09	4.6	U						8
trans-1,2-Dichloroethylene	10017162	HS505_00073B-09	4.5	U						9
1,1-Dichloroethane	10017162	HS505_00073B-09	4.7	U						10
cis-1,2-Dichloroethylene	10017162	HS505_00073B-09	4.5	U						11
Methyl ethyl ketone	10017162	HS505_00073B-09	49.0	U						12
Chloroform	10017162	HS505_00073B-09	4.6	U						13
1,1,1-Trichloroethane	10017162	HS505_00073B-09	45.0							14
Cyclohexane	10017162	HS505_00073B-09	68.0							15
Carbon tetrachloride	10017162	HS505_00073B-09	4.9	U						16
Benzene	10017162	HS505_00073B-09	4.5	U						17
1,2-Dichloroethane	10017162	HS505_00073B-09	4.7	U						18
Trichloroethylene	10017162	HS505_00073B-09	4.6	U						19
Butanol	10017162	HS505_00073B-09	55.0	U						20
Methyl isobutyl ketone	10017162	HS505_00073B-09	39.0	U						21
Toluene	10017162	HS505_00073B-09	4.1	U						22
Tetrachloroethylene	10017162	HS505_00073B-09	3.7	U						23
Chlorobenzene	10017162	HS505_00073B-09	4.2	U						24
Ethyl benzene	10017162	HS505_00073B-09	4.3	U						25
m&p-Xylene	10017162	HS505_00073B-09	3.8	U						26
o-Xylene	10017162	HS505_00073B-09	4.4	U						27
Bromoform	10017162	HS505_00073B-09	4.0	U						28
1,1,2,2-Tetrachloroethane	10017162	HS505_00073B-09	4.7	U						29
1,3,5-Trimethylbenzene	10017162	HS505_00073B-09	4.6	U						30
1,2,4-Trimethylbenzene	10017162	HS505_00073B-09	4.7	U						31
Chloromethane	10017163	HS505_00082B-20	5.2	U						1
Methanol	10017163	HS505_00082B-20	72.0	U						2
Ethyl ether	10017163	HS505_00082B-20	4.6	U						3
1,1-Dichloroethylene	10017163	HS505_00082B-20	4.9	U						4
1,1,2-Trichloro-1,2,2-trifluoroethane	10017163	HS505_00082B-20	4.7	U						5
Acetone	10017163	HS505_00082B-20	51.0	U						6
Carbon disulfide	10017163	HS505_00082B-20	5.0	U						7
Methylene chloride	10017163	HS505_00082B-20	4.6	U						8
trans-1,2-Dichloroethylene	10017163	HS505_00082B-20	4.5	U						9
1,1-Dichloroethane	10017163	HS505_00082B-20	4.7	U						10
cis-1,2-Dichloroethylene	10017163	HS505_00082B-20	4.5	U						11
Methyl ethyl ketone	10017163	HS505_00082B-20	49.0	U						12
Chloroform	10017163	HS505_00082B-20	4.6	U						13
1,1,1-Trichloroethane	10017163	HS505_00082B-20	4.6	U						14
Cyclohexane	10017163	HS505_00082B-20	4.4	U						15
Carbon tetrachloride	10017163	HS505_00082B-20	4.9	U						16

Analyte	Container	Sample no	Concentration (ppm)	U	D	Z	J	E	B	Analyte Order
Benzene	10017163	HS505_00082B-20	4.5	U						17
1,2-Dichloroethane	10017163	HS505_00082B-20	4.7	U						18
Trichloroethylene	10017163	HS505_00082B-20	4.6	U						19
Butanol	10017163	HS505_00082B-20	55.0	U						20
Methyl isobutyl ketone	10017163	HS505_00082B-20	39.0	U						21
Toluene	10017163	HS505_00082B-20	4.1	U						22
Tetrachloroethylene	10017163	HS505_00082B-20	3.7	U						23
Chlorobenzene	10017163	HS505_00082B-20	4.2	U						24
Ethyl benzene	10017163	HS505_00082B-20	4.3	U						25
m&p-Xylene	10017163	HS505_00082B-20	3.8	U						26
o-Xylene	10017163	HS505_00082B-20	4.4	U						27
Bromoform	10017163	HS505_00082B-20	4.0	U						28
1,1,2,2-Tetrachloroethane	10017163	HS505_00082B-20	4.7	U						29
1,3,5-Trimethylbenzene	10017163	HS505_00082B-20	4.6	U						30
1,2,4-Trimethylbenzene	10017163	HS505_00082B-20	4.7	U						31
Chloromethane	10017166	HS505_00087B-01	5.2	U						1
Methanol	10017166	HS505_00087B-01	72.0	U						2
Ethyl ether	10017166	HS505_00087B-01	4.6	U						3
1,1-Dichloroethylene	10017166	HS505_00087B-01	4.9	U						4
1,1,2-Trichloro-1,2,2-trifluoroethane	10017166	HS505_00087B-01	4.7	U						5
Acetone	10017166	HS505_00087B-01	51.0	U						6
Carbon disulfide	10017166	HS505_00087B-01	5.0	U						7
Methylene chloride	10017166	HS505_00087B-01	4.6	U						8
trans-1,2-Dichloroethylene	10017166	HS505_00087B-01	4.5	U						9
1,1-Dichloroethane	10017166	HS505_00087B-01	4.7	U						10
cis-1,2-Dichloroethylene	10017166	HS505_00087B-01	4.5	U						11
Methyl ethyl ketone	10017166	HS505_00087B-01	49.0	U						12
Chloroform	10017166	HS505_00087B-01	4.6	U						13
1,1,1-Trichloroethane	10017166	HS505_00087B-01	4.6	U						14
Cyclohexane	10017166	HS505_00087B-01	4.4	U						15
Carbon tetrachloride	10017166	HS505_00087B-01	4.9	U						16
Benzene	10017166	HS505_00087B-01	4.5	U						17
1,2-Dichloroethane	10017166	HS505_00087B-01	4.7	U						18
Trichloroethylene	10017166	HS505_00087B-01	4.6	U						19
Butanol	10017166	HS505_00087B-01	55.0	U						20
Methyl isobutyl ketone	10017166	HS505_00087B-01	39.0	U						21
Toluene	10017166	HS505_00087B-01	4.1				J			22
Tetrachloroethylene	10017166	HS505_00087B-01	3.7	U						23
Chlorobenzene	10017166	HS505_00087B-01	4.2	U						24
Ethyl benzene	10017166	HS505_00087B-01	4.3	U						25
m&p-Xylene	10017166	HS505_00087B-01	3.8	U						26
o-Xylene	10017166	HS505_00087B-01	4.4	U						27
Bromoform	10017166	HS505_00087B-01	4.0	U						28
1,1,2,2-Tetrachloroethane	10017166	HS505_00087B-01	4.7	U						29
1,3,5-Trimethylbenzene	10017166	HS505_00087B-01	4.6	U						30
1,2,4-Trimethylbenzene	10017166	HS505_00087B-01	4.7	U						31
Chloromethane	10017175	HS505_00091B-19	5.2	U						1
Methanol	10017175	HS505_00091B-19	380.0							2
Ethyl ether	10017175	HS505_00091B-19	4.6	U						3
1,1-Dichloroethylene	10017175	HS505_00091B-19	4.9	U						4
1,1,2-Trichloro-1,2,2-trifluoroethane	10017175	HS505_00091B-19	4.7	U						5
Acetone	10017175	HS505_00091B-19	51.0	U						6
Carbon disulfide	10017175	HS505_00091B-19	5.0	U						7
Methylene chloride	10017175	HS505_00091B-19	4.6	U						8
trans-1,2-Dichloroethylene	10017175	HS505_00091B-19	4.5	U						9
1,1-Dichloroethane	10017175	HS505_00091B-19	4.7	U						10
cis-1,2-Dichloroethylene	10017175	HS505_00091B-19	4.5	U						11
Methyl ethyl ketone	10017175	HS505_00091B-19	49.0	U						12
Chloroform	10017175	HS505_00091B-19	4.6	U						13
1,1,1-Trichloroethane	10017175	HS505_00091B-19	4.6	U						14
Cyclohexane	10017175	HS505_00091B-19	4.4	U						15
Carbon tetrachloride	10017175	HS505_00091B-19	4.9	U						16
Benzene	10017175	HS505_00091B-19	4.5	U						17
1,2-Dichloroethane	10017175	HS505_00091B-19	4.7	U						18
Trichloroethylene	10017175	HS505_00091B-19	4.6	U						19
Butanol	10017175	HS505_00091B-19	55.0	U						20
Methyl isobutyl ketone	10017175	HS505_00091B-19	39.0	U						21
Toluene	10017175	HS505_00091B-19	4.1	U						22
Tetrachloroethylene	10017175	HS505_00091B-19	3.7	U						23
Chlorobenzene	10017175	HS505_00091B-19	4.2	U						24
Ethyl benzene	10017175	HS505_00091B-19	4.3	U						25
m&p-Xylene	10017175	HS505_00091B-19	3.8	U						26
o-Xylene	10017175	HS505_00091B-19	4.4	U						27
Bromoform	10017175	HS505_00091B-19	4.0	U						28
1,1,2,2-Tetrachloroethane	10017175	HS505_00091B-19	4.7	U						29
1,3,5-Trimethylbenzene	10017175	HS505_00091B-19	4.6	U						30

Analyte	Container	Sample no.	Concentration (ppm)	U	D	Z	J	E	B	Analyte Order
1,2,4-Trimethylbenzene	10017175	HS505_00091B-19	4.7	U						31
Chloromethane	10017181	HS505_00076C-09	5.2	U						1
Methanol	10017181	HS505_00076C-09	270.0							2
Ethyl ether	10017181	HS505_00076C-09	4.6	U						3
1,1-Dichloroethylene	10017181	HS505_00076C-09	4.9	U						4
1,1,2-Trichloro-1,2,2-trifluoroethane	10017181	HS505_00076C-09	4.7	U						5
Acetone	10017181	HS505_00076C-09	51.0	U						6
Carbon disulfide	10017181	HS505_00076C-09	5.0	U						7
Methylene chloride	10017181	HS505_00076C-09	4.6	U						8
trans-1,2-Dichloroethylene	10017181	HS505_00076C-09	4.5	U						9
1,1-Dichloroethane	10017181	HS505_00076C-09	4.7	U						10
cis-1,2-Dichloroethylene	10017181	HS505_00076C-09	4.5	U						11
Methyl ethyl ketone	10017181	HS505_00076C-09	49.0	U						12
Chloroform	10017181	HS505_00076C-09	4.6	U						13
1,1,1-Trichloroethane	10017181	HS505_00076C-09	4.6	U						14
Cyclohexane	10017181	HS505_00076C-09	4.4	U						15
Carbon tetrachloride	10017181	HS505_00076C-09	4.9	U						16
Benzene	10017181	HS505_00076C-09	4.5	U						17
1,2-Dichloroethane	10017181	HS505_00076C-09	4.7	U						18
Trichloroethylene	10017181	HS505_00076C-09	4.6	U						19
Butanol	10017181	HS505_00076C-09	55.0	U						20
Methyl isobutyl ketone	10017181	HS505_00076C-09	39.0	U						21
Toluene	10017181	HS505_00076C-09	5.0				J			22
Tetrachloroethylene	10017181	HS505_00076C-09	3.7	U						23
Chlorobenzene	10017181	HS505_00076C-09	4.2	U						24
Ethyl benzene	10017181	HS505_00076C-09	4.3	U						25
m&p-Xylene	10017181	HS505_00076C-09	3.8	U						26
o-Xylene	10017181	HS505_00076C-09	4.4	U						27
Bromoform	10017181	HS505_00076C-09	4.0	U						28
1,1,2,2-Tetrachloroethane	10017181	HS505_00076C-09	4.7	U						29
1,3,5-Trimethylbenzene	10017181	HS505_00076C-09	4.6	U						30
1,2,4-Trimethylbenzene	10017181	HS505_00076C-09	4.7	U						31
Chloromethane	10017186	HS205_00289B-12	3.2	U						1
Methanol	10017186	HS205_00289B-12	570.0							2
Ethyl ether	10017186	HS205_00289B-12	3.4	U						3
1,1-Dichloroethylene	10017186	HS205_00289B-12	2.5	U						4
1,1,2-Trichloro-1,2,2-trifluoroethane	10017186	HS205_00289B-12	3.3	U						5
Acetone	10017186	HS205_00289B-12	13.0	U						6
Carbon disulfide	10017186	HS205_00289B-12	2.5	U						7
Methylene chloride	10017186	HS205_00289B-12	1.5	U						8
trans-1,2-Dichloroethylene	10017186	HS205_00289B-12	1.2	U						9
1,1-Dichloroethane	10017186	HS205_00289B-12	1.6	U						10
cis-1,2-Dichloroethylene	10017186	HS205_00289B-12	1.4	U						11
Methyl ethyl ketone	10017186	HS205_00289B-12	13.0	U						12
Chloroform	10017186	HS205_00289B-12	1.6	U						13
1,1,1-Trichloroethane	10017186	HS205_00289B-12	2.2	U						14
Cyclohexane	10017186	HS205_00289B-12	31.0							15
Carbon tetrachloride	10017186	HS205_00289B-12	2.6	U						16
Benzene	10017186	HS205_00289B-12	1.4	U						17
1,2-Dichloroethane	10017186	HS205_00289B-12	2.1	U						18
Trichloroethylene	10017186	HS205_00289B-12	1.4	U						19
Butanol	10017186	HS205_00289B-12	16.0	U						20
Methyl isobutyl ketone	10017186	HS205_00289B-12	10.0	U						21
Toluene	10017186	HS205_00289B-12	9.4				J			22
Tetrachloroethylene	10017186	HS205_00289B-12	1.5	U						23
Chlorobenzene	10017186	HS205_00289B-12	1.2	U						24
Ethyl benzene	10017186	HS205_00289B-12	1.0	U						25
m&p-Xylene	10017186	HS205_00289B-12	1.1	U						26
o-Xylene	10017186	HS205_00289B-12	1.5	U						27
Bromoform	10017186	HS205_00289B-12	1.2	U						28
1,1,2,2-Tetrachloroethane	10017186	HS205_00289B-12	1.0	U						29
1,3,5-Trimethylbenzene	10017186	HS205_00289B-12	0.9	U						30
1,2,4-Trimethylbenzene	10017186	HS205_00289B-12	0.6	U						31
Chloromethane	10017187	HS505_00073B-08	5.2	U						1
Methanol	10017187	HS505_00073B-08	72.0	U						2
Ethyl ether	10017187	HS505_00073B-08	4.6	U						3
1,1-Dichloroethylene	10017187	HS505_00073B-08	4.9	U						4
1,1,2-Trichloro-1,2,2-trifluoroethane	10017187	HS505_00073B-08	4.7	U						5
Acetone	10017187	HS505_00073B-08	51.0	U						6
Carbon disulfide	10017187	HS505_00073B-08	5.0	U						7
Methylene chloride	10017187	HS505_00073B-08	4.6	U						8
trans-1,2-Dichloroethylene	10017187	HS505_00073B-08	4.5	U						9
1,1-Dichloroethane	10017187	HS505_00073B-08	4.7	U						10
cis-1,2-Dichloroethylene	10017187	HS505_00073B-08	4.5	U						11
Methyl ethyl ketone	10017187	HS505_00073B-08	49.0	U						12
Chloroform	10017187	HS505_00073B-08	4.6	U						13

Analyte	Container	Sample no	Concentration (ppm)	U	D	Z	J	E	B	Analyte Order
1,1,1-Trichloroethane	10017187	HS505_00073B-08	4.6	U						14
Cyclohexane	10017187	HS505_00073B-08	4.4	U						15
Carbon tetrachloride	10017187	HS505_00073B-08	4.9	U						16
Benzene	10017187	HS505_00073B-08	4.5	U						17
1,2-Dichloroethane	10017187	HS505_00073B-08	4.7	U						18
Trichloroethylene	10017187	HS505_00073B-08	4.6	U						19
Butanol	10017187	HS505_00073B-08	55.0	U						20
Methyl isobutyl ketone	10017187	HS505_00073B-08	39.0	U						21
Toluene	10017187	HS505_00073B-08	4.8				J			22
Tetrachloroethylene	10017187	HS505_00073B-08	3.7	U						23
Chlorobenzene	10017187	HS505_00073B-08	4.2	U						24
Ethyl benzene	10017187	HS505_00073B-08	4.3	U						25
m&p-Xylene	10017187	HS505_00073B-08	3.8	U						26
o-Xylene	10017187	HS505_00073B-08	4.4	U						27
Bromoform	10017187	HS505_00073B-08	4.0	U						28
1,1,2,2-Tetrachloroethane	10017187	HS505_00073B-08	4.7	U						29
1,3,5-Trimethylbenzene	10017187	HS505_00073B-08	4.6	U						30
1,2,4-Trimethylbenzene	10017187	HS505_00073B-08	4.7	U						31
Chloromethane	10017190	HS505_00083B-12	5.2	U						1
Methanol	10017190	HS505_00083B-12	72.0	U						2
Ethyl ether	10017190	HS505_00083B-12	4.6	U						3
1,1-Dichloroethylene	10017190	HS505_00083B-12	4.9	U						4
1,1,2-Trichloro-1,2,2-trifluoroethane	10017190	HS505_00083B-12	4.7	U						5
Acetone	10017190	HS505_00083B-12	51.0	U						6
Carbon disulfide	10017190	HS505_00083B-12	5.0	U						7
Methylene chloride	10017190	HS505_00083B-12	4.6	U						8
trans-1,2-Dichloroethylene	10017190	HS505_00083B-12	4.5	U						9
1,1-Dichloroethane	10017190	HS505_00083B-12	4.7	U						10
cis-1,2-Dichloroethylene	10017190	HS505_00083B-12	4.5	U						11
Methyl ethyl ketone	10017190	HS505_00083B-12	49.0	U						12
Chloroform	10017190	HS505_00083B-12	4.6	U						13
1,1,1-Trichloroethane	10017190	HS505_00083B-12	56.0							14
Cyclohexane	10017190	HS505_00083B-12	4.4	U						15
Carbon tetrachloride	10017190	HS505_00083B-12	4.9	U						16
Benzene	10017190	HS505_00083B-12	4.5	U						17
1,2-Dichloroethane	10017190	HS505_00083B-12	4.7	U						18
Trichloroethylene	10017190	HS505_00083B-12	9.5				J			19
Butanol	10017190	HS505_00083B-12	55.0	U						20
Methyl isobutyl ketone	10017190	HS505_00083B-12	39.0	U						21
Toluene	10017190	HS505_00083B-12	4.1	U						22
Tetrachloroethylene	10017190	HS505_00083B-12	3.7	U						23
Chlorobenzene	10017190	HS505_00083B-12	4.2	U						24
Ethyl benzene	10017190	HS505_00083B-12	4.3	U						25
m&p-Xylene	10017190	HS505_00083B-12	3.8	U						26
o-Xylene	10017190	HS505_00083B-12	4.4	U						27
Bromoform	10017190	HS505_00083B-12	4.0	U						28
1,1,2,2-Tetrachloroethane	10017190	HS505_00083B-12	4.7	U						29
1,3,5-Trimethylbenzene	10017190	HS505_00083B-12	4.6	U						30
1,2,4-Trimethylbenzene	10017190	HS505_00083B-12	4.7	U						31
Chloromethane	10017193	HS505_00072B-17	5.2	U						1
Methanol	10017193	HS505_00072B-17	640.0							2
Ethyl ether	10017193	HS505_00072B-17	4.6	U						3
1,1-Dichloroethylene	10017193	HS505_00072B-17	4.9	U						4
1,1,2-Trichloro-1,2,2-trifluoroethane	10017193	HS505_00072B-17	4.7	U						5
Acetone	10017193	HS505_00072B-17	51.0	U						6
Carbon disulfide	10017193	HS505_00072B-17	5.0	U						7
Methylene chloride	10017193	HS505_00072B-17	4.6	U						8
trans-1,2-Dichloroethylene	10017193	HS505_00072B-17	4.5	U						9
1,1-Dichloroethane	10017193	HS505_00072B-17	4.7	U						10
cis-1,2-Dichloroethylene	10017193	HS505_00072B-17	4.5	U						11
Methyl ethyl ketone	10017193	HS505_00072B-17	49.0	U						12
Chloroform	10017193	HS505_00072B-17	4.6	U						13
1,1,1-Trichloroethane	10017193	HS505_00072B-17	4.6	U						14
Cyclohexane	10017193	HS505_00072B-17	4.4	U						15
Carbon tetrachloride	10017193	HS505_00072B-17	4.9	U						16
Benzene	10017193	HS505_00072B-17	4.5	U						17
1,2-Dichloroethane	10017193	HS505_00072B-17	4.7	U						18
Trichloroethylene	10017193	HS505_00072B-17	4.6	U						19
Butanol	10017193	HS505_00072B-17	55.0	U						20
Methyl isobutyl ketone	10017193	HS505_00072B-17	39.0	U						21
Toluene	10017193	HS505_00072B-17	4.1	U						22
Tetrachloroethylene	10017193	HS505_00072B-17	3.7	U						23
Chlorobenzene	10017193	HS505_00072B-17	4.2	U						24
Ethyl benzene	10017193	HS505_00072B-17	4.3	U						25
m&p-Xylene	10017193	HS505_00072B-17	3.8	U						26
o-Xylene	10017193	HS505_00072B-17	4.4	U						27

Analyte	Container	Sample no	Concentration (ppm)	U	D	Z	J	E	B	Analyte Order
Bromoform	10017193	HS505_00072B-17	4.0	U						28
1,1,2,2-Tetrachloroethane	10017193	HS505_00072B-17	4.7	U						29
1,3,5-Trimethylbenzene	10017193	HS505_00072B-17	4.6	U						30
1,2,4-Trimethylbenzene	10017193	HS505_00072B-17	4.7	U						31
Chloromethane	10017194	HS505_00087B-06	5.2	U						1
Methanol	10017194	HS505_00087B-06	72.0	U						2
Ethyl ether	10017194	HS505_00087B-06	4.6	U						3
1,1-Dichloroethylene	10017194	HS505_00087B-06	4.9	U						4
1,1,2-Trichloro-1,2,2-trifluoroethane	10017194	HS505_00087B-06	4.7	U						5
Acetone	10017194	HS505_00087B-06	51.0	U						6
Carbon disulfide	10017194	HS505_00087B-06	5.0	U						7
Methylene chloride	10017194	HS505_00087B-06	4.6	U						8
trans-1,2-Dichloroethylene	10017194	HS505_00087B-06	4.5	U						9
1,1-Dichloroethane	10017194	HS505_00087B-06	4.7	U						10
cis-1,2-Dichloroethylene	10017194	HS505_00087B-06	4.5	U						11
Methyl ethyl ketone	10017194	HS505_00087B-06	49.0	U						12
Chloroform	10017194	HS505_00087B-06	4.6	U						13
1,1,1-Trichloroethane	10017194	HS505_00087B-06	4.6	U						14
Cyclohexane	10017194	HS505_00087B-06	17000.0		D					15
Carbon tetrachloride	10017194	HS505_00087B-06	4.9	U						16
Benzene	10017194	HS505_00087B-06	4.5	U						17
1,2-Dichloroethane	10017194	HS505_00087B-06	4.7	U						18
Trichloroethylene	10017194	HS505_00087B-06	4.6	U						19
Butanol	10017194	HS505_00087B-06	55.0	U						20
Methyl isobutyl ketone	10017194	HS505_00087B-06	39.0	U						21
Toluene	10017194	HS505_00087B-06	4.1	U						22
Tetrachloroethylene	10017194	HS505_00087B-06	3.7	U						23
Chlorobenzene	10017194	HS505_00087B-06	4.2	U						24
Ethyl benzene	10017194	HS505_00087B-06	4.3	U						25
m&p-Xylene	10017194	HS505_00087B-06	3.8	U						26
o-Xylene	10017194	HS505_00087B-06	4.4	U						27
Bromoform	10017194	HS505_00087B-06	4.0	U						28
1,1,2,2-Tetrachloroethane	10017194	HS505_00087B-06	4.7	U						29
1,3,5-Trimethylbenzene	10017194	HS505_00087B-06	4.6	U						30
1,2,4-Trimethylbenzene	10017194	HS505_00087B-06	4.7	U						31
Chloromethane	10018314	HS505_00075B-04	5.2	U						1
Methanol	10018314	HS505_00075B-04	800.0							2
Ethyl ether	10018314	HS505_00075B-04	4.6	U						3
1,1-Dichloroethylene	10018314	HS505_00075B-04	4.9	U						4
1,1,2-Trichloro-1,2,2-trifluoroethane	10018314	HS505_00075B-04	4.7	U						5
Acetone	10018314	HS505_00075B-04	51.0	U						6
Carbon disulfide	10018314	HS505_00075B-04	5.0	U						7
Methylene chloride	10018314	HS505_00075B-04	4.6	U						8
trans-1,2-Dichloroethylene	10018314	HS505_00075B-04	4.5	U						9
1,1-Dichloroethane	10018314	HS505_00075B-04	4.7	U						10
cis-1,2-Dichloroethylene	10018314	HS505_00075B-04	4.5	U						11
Methyl ethyl ketone	10018314	HS505_00075B-04	49.0	U						12
Chloroform	10018314	HS505_00075B-04	4.6	U						13
1,1,1-Trichloroethane	10018314	HS505_00075B-04	4.6	U						14
Cyclohexane	10018314	HS505_00075B-04	4.4	U						15
Carbon tetrachloride	10018314	HS505_00075B-04	4.9	U						16
Benzene	10018314	HS505_00075B-04	4.5	U						17
1,2-Dichloroethane	10018314	HS505_00075B-04	4.7	U						18
Trichloroethylene	10018314	HS505_00075B-04	4.6	U						19
Butanol	10018314	HS505_00075B-04	55.0	U						20
Methyl isobutyl ketone	10018314	HS505_00075B-04	39.0	U						21
Toluene	10018314	HS505_00075B-04	12.0							22
Tetrachloroethylene	10018314	HS505_00075B-04	3.7	U						23
Chlorobenzene	10018314	HS505_00075B-04	4.2	U						24
Ethyl benzene	10018314	HS505_00075B-04	780.0		D					25
m&p-Xylene	10018314	HS505_00075B-04	2300.0		D					26
o-Xylene	10018314	HS505_00075B-04	380.0		D					27
Bromoform	10018314	HS505_00075B-04	4.0	U						28
1,1,2,2-Tetrachloroethane	10018314	HS505_00075B-04	4.7	U						29
1,3,5-Trimethylbenzene	10018314	HS505_00075B-04	4.6	U						30
1,2,4-Trimethylbenzene	10018314	HS505_00075B-04	4.7	U						31
Chloromethane	10018652	HS505_00074B-07	5.2	U						1
Methanol	10018652	HS505_00074B-07	89.0				J			2
Ethyl ether	10018652	HS505_00074B-07	4.6	U						3
1,1-Dichloroethylene	10018652	HS505_00074B-07	4.9	U						4
1,1,2-Trichloro-1,2,2-trifluoroethane	10018652	HS505_00074B-07	4.7	U						5
Acetone	10018652	HS505_00074B-07	51.0	U						6
Carbon disulfide	10018652	HS505_00074B-07	5.0	U						7
Methylene chloride	10018652	HS505_00074B-07	4.6	U						8
trans-1,2-Dichloroethylene	10018652	HS505_00074B-07	4.5	U						9
1,1-Dichloroethane	10018652	HS505_00074B-07	4.7	U						10

Analyte	Container	Sample no	Concentration (ppm)	U	D	Z	J	E	B	Analyte Order
cis-1,2-Dichloroethylene	10018652	HS505_00074B-07	4.5	U						11
Methyl ethyl ketone	10018652	HS505_00074B-07	49.0	U						12
Chloroform	10018652	HS505_00074B-07	4.6	U						13
1,1,1-Trichloroethane	10018652	HS505_00074B-07	4.6	U						14
Cyclohexane	10018652	HS505_00074B-07	4.4	U						15
Carbon tetrachloride	10018652	HS505_00074B-07	4.9	U						16
Benzene	10018652	HS505_00074B-07	9.8				J			17
1,2-Dichloroethane	10018652	HS505_00074B-07	4.7	U						18
Trichloroethylene	10018652	HS505_00074B-07	4.6	U						19
Butanol	10018652	HS505_00074B-07	55.0	U						20
Methyl isobutyl ketone	10018652	HS505_00074B-07	39.0	U						21
Toluene	10018652	HS505_00074B-07	100.0							22
Tetrachloroethylene	10018652	HS505_00074B-07	3.7	U						23
Chlorobenzene	10018652	HS505_00074B-07	4.2	U						24
Ethyl benzene	10018652	HS505_00074B-07	1500.0		D					25
m&p-Xylene	10018652	HS505_00074B-07	4100.0		D					26
o-Xylene	10018652	HS505_00074B-07	710.0		D					27
Bromoform	10018652	HS505_00074B-07	4.0	U						28
1,1,2,2-Tetrachloroethane	10018652	HS505_00074B-07	4.7	U						29
1,3,5-Trimethylbenzene	10018652	HS505_00074B-07	4.6	U						30
1,2,4-Trimethylbenzene	10018652	HS505_00074B-07	4.7	U						31
Chloromethane	10018653	HS505_00081B-17	5.2	U						1
Methanol	10018653	HS505_00081B-17	72.0	U						2
Ethyl ether	10018653	HS505_00081B-17	4.6	U						3
1,1-Dichloroethylene	10018653	HS505_00081B-17	4.9	U						4
1,1,2-Trichloro-1,2,2-trifluoroethane	10018653	HS505_00081B-17	4.7	U						5
Acetone	10018653	HS505_00081B-17	51.0	U						6
Carbon disulfide	10018653	HS505_00081B-17	5.0	U						7
Methylene chloride	10018653	HS505_00081B-17	4.6	U						8
trans-1,2-Dichloroethylene	10018653	HS505_00081B-17	4.5	U						9
1,1-Dichloroethane	10018653	HS505_00081B-17	4.7	U						10
cis-1,2-Dichloroethylene	10018653	HS505_00081B-17	4.5	U						11
Methyl ethyl ketone	10018653	HS505_00081B-17	49.0	U						12
Chloroform	10018653	HS505_00081B-17	4.6	U						13
1,1,1-Trichloroethane	10018653	HS505_00081B-17	4.6	U						14
Cyclohexane	10018653	HS505_00081B-17	4.4	U						15
Carbon tetrachloride	10018653	HS505_00081B-17	4.9	U						16
Benzene	10018653	HS505_00081B-17	4.5	U						17
1,2-Dichloroethane	10018653	HS505_00081B-17	4.7	U						18
Trichloroethylene	10018653	HS505_00081B-17	4.6	U						19
Butanol	10018653	HS505_00081B-17	55.0	U						20
Methyl isobutyl ketone	10018653	HS505_00081B-17	39.0	U						21
Toluene	10018653	HS505_00081B-17	4.4				J			22
Tetrachloroethylene	10018653	HS505_00081B-17	3.7	U						23
Chlorobenzene	10018653	HS505_00081B-17	4.2	U						24
Ethyl benzene	10018653	HS505_00081B-17	4.3	U						25
m&p-Xylene	10018653	HS505_00081B-17	3.8	U						26
o-Xylene	10018653	HS505_00081B-17	4.4	U						27
Bromoform	10018653	HS505_00081B-17	4.0	U						28
1,1,2,2-Tetrachloroethane	10018653	HS505_00081B-17	4.7	U						29
1,3,5-Trimethylbenzene	10018653	HS505_00081B-17	4.6	U						30
1,2,4-Trimethylbenzene	10018653	HS505_00081B-17	4.7	U						31
Chloromethane	10018654	HS405_00341B-09	2.3	U						1
Methanol	10018654	HS405_00341B-09	110.0							2
Ethyl ether	10018654	HS405_00341B-09	3.4	U						3
1,1-Dichloroethylene	10018654	HS405_00341B-09	3.0	U						4
1,1,2-Trichloro-1,2,2-trifluoroethane	10018654	HS405_00341B-09	3.0	U						5
Acetone	10018654	HS405_00341B-09	35.0	U						6
Carbon disulfide	10018654	HS405_00341B-09	3.4	U						7
Methylene chloride	10018654	HS405_00341B-09	3.7	U						8
trans-1,2-Dichloroethylene	10018654	HS405_00341B-09	3.8	U						9
1,1-Dichloroethane	10018654	HS405_00341B-09	3.3	U						10
cis-1,2-Dichloroethylene	10018654	HS405_00341B-09	3.4	U						11
Methyl ethyl ketone	10018654	HS405_00341B-09	40.0	U						12
Chloroform	10018654	HS405_00341B-09	2.8	U						13
1,1,1-Trichloroethane	10018654	HS405_00341B-09	29.0							14
Cyclohexane	10018654	HS405_00341B-09	3.3	U						15
Carbon tetrachloride	10018654	HS405_00341B-09	2.5	U						16
Benzene	10018654	HS405_00341B-09	3.9	U						17
1,2-Dichloroethane	10018654	HS405_00341B-09	2.5	U						18
Trichloroethylene	10018654	HS405_00341B-09	2.8	U						19
Butanol	10018654	HS405_00341B-09	40.0	U						20
Methyl isobutyl ketone	10018654	HS405_00341B-09	38.0	U						21
Toluene	10018654	HS405_00341B-09	3.7	U						22
Tetrachloroethylene	10018654	HS405_00341B-09	2.8	U						23
Chlorobenzene	10018654	HS405_00341B-09	3.3	U						24

Analyte	Container	Sample no	Concentration (ppm)	U	D	Z	J	E	B	Analytic Order
Ethyl benzene	10018654	HS405_00341B-09	180 0		D					25
m&p-Xylene	10018654	HS405_00341B-09	510 0		D					26
o-Xylene	10018654	HS405_00341B-09	85.0							27
Bromoform	10018654	HS405_00341B-09	3.0	U						28
1,1,2,2-Tetrachloroethane	10018654	HS405_00341B-09	3 5	U						29
1,3,5-Trimethylbenzene	10018654	HS405_00341B-09	3 2	U						30
1,2,4-Trimethylbenzene	10018654	HS405_00341B-09	3 1	U						31
Chloromethane	10018664	HS505_00072B-06	5 2	U						1
Methanol	10018664	HS505_00072B-06	640 0							2
Ethyl ether	10018664	HS505_00072B-06	4 6	U						3
1,1-Dichloroethylene	10018664	HS505_00072B-06	4.9	U						4
1,1,2-Trichloro-1,2,2-trifluoroethane	10018664	HS505_00072B-06	4 7	U						5
Acetone	10018664	HS505_00072B-06	51 0	U						6
Carbon disulfide	10018664	HS505_00072B-06	5 0	U						7
Methylene chloride	10018664	HS505_00072B-06	4 6	U						8
trans-1,2-Dichloroethylene	10018664	HS505_00072B-06	4 5	U						9
1,1-Dichloroethane	10018664	HS505_00072B-06	4 7	U						10
cis-1,2-Dichloroethylene	10018664	HS505_00072B-06	4 5	U						11
Methyl ethyl ketone	10018664	HS505_00072B-06	49 0	U						12
Chloroform	10018664	HS505_00072B-06	4 6	U						13
1,1,1-Trichloroethane	10018664	HS505_00072B-06	15.0							14
Cyclohexane	10018664	HS505_00072B-06	4 4	U						15
Carbon tetrachloride	10018664	HS505_00072B-06	4 9	U						16
Benzene	10018664	HS505_00072B-06	4 5	U						17
1,2-Dichloroethane	10018664	HS505_00072B-06	4 7	U						18
Trichloroethylene	10018664	HS505_00072B-06	4 6	U						19
Butanol	10018664	HS505_00072B-06	55 0	U						20
Methyl isobutyl ketone	10018664	HS505_00072B-06	39 0	U						21
Toluene	10018664	HS505_00072B-06	4 1	U						22
Tetrachloroethylene	10018664	HS505_00072B-06	3.7	U						23
Chlorobenzene	10018664	HS505_00072B-06	4.2	U						24
Ethyl benzene	10018664	HS505_00072B-06	4 3	U						25
m&p-Xylene	10018664	HS505_00072B-06	3 8	U						26
o-Xylene	10018664	HS505_00072B-06	4 4	U						27
Bromoform	10018664	HS505_00072B-06	4 0	U						28
1,1,2,2-Tetrachloroethane	10018664	HS505_00072B-06	4 7	U						29
1,3,5-Trimethylbenzene	10018664	HS505_00072B-06	4 6	U						30
1,2,4-Trimethylbenzene	10018664	HS505_00072B-06	4.7	U						31
Chloromethane	10018667	HS505_00072B-10	5.2	U						1
Methanol	10018667	HS505_00072B-10	72.0	U						2
Ethyl ether	10018667	HS505_00072B-10	4 6	U						3
1,1-Dichloroethylene	10018667	HS505_00072B-10	4 9	U						4
1,1,2-Trichloro-1,2,2-trifluoroethane	10018667	HS505_00072B-10	4 7	U						5
Acetone	10018667	HS505_00072B-10	51 0	U						6
Carbon disulfide	10018667	HS505_00072B-10	5.0	U						7
Methylene chloride	10018667	HS505_00072B-10	4.6	U						8
trans-1,2-Dichloroethylene	10018667	HS505_00072B-10	4.5	U						9
1,1-Dichloroethane	10018667	HS505_00072B-10	4 7	U						10
cis-1,2-Dichloroethylene	10018667	HS505_00072B-10	4 5	U						11
Methyl ethyl ketone	10018667	HS505_00072B-10	49 0	U						12
Chloroform	10018667	HS505_00072B-10	4 6	U						13
1,1,1-Trichloroethane	10018667	HS505_00072B-10	9 3				J			14
Cyclohexane	10018667	HS505_00072B-10	4 4	U						15
Carbon tetrachloride	10018667	HS505_00072B-10	4 9	U						16
Benzene	10018667	HS505_00072B-10	4 5	U						17
1,2-Dichloroethane	10018667	HS505_00072B-10	4 7	U						18
Trichloroethylene	10018667	HS505_00072B-10	17.0							19
Butanol	10018667	HS505_00072B-10	55 0	U						20
Methyl isobutyl ketone	10018667	HS505_00072B-10	39 0	U						21
Toluene	10018667	HS505_00072B-10	4 1	U						22
Tetrachloroethylene	10018667	HS505_00072B-10	3 7	U						23
Chlorobenzene	10018667	HS505_00072B-10	4 2	U						24
Ethyl benzene	10018667	HS505_00072B-10	4 3	U						25
m&p-Xylene	10018667	HS505_00072B-10	3 8	U						26
o-Xylene	10018667	HS505_00072B-10	4 4	U						27
Bromoform	10018667	HS505_00072B-10	4 0	U						28
1,1,2,2-Tetrachloroethane	10018667	HS505_00072B-10	4 7	U						29
1,3,5-Trimethylbenzene	10018667	HS505_00072B-10	4 6	U						30
1,2,4-Trimethylbenzene	10018667	HS505_00072B-10	4 7	U						31
Chloromethane	10018668	HS505_00068B-14	5 2	U						1
Methanol	10018668	HS505_00068B-14	72 0	U						2
Ethyl ether	10018668	HS505_00068B-14	4 6	U						3
1,1-Dichloroethylene	10018668	HS505_00068B-14	4 9	U						4
1,1,2-Trichloro-1,2,2-trifluoroethane	10018668	HS505_00068B-14	4 7	U						5
Acetone	10018668	HS505_00068B-14	51 0	U						6
Carbon disulfide	10018668	HS505_00068B-14	5.0	U						7

Analyte	Container	Sample no	Concentration (ppm)	U	D	Z	J	E	B	Analyte Order
Methylene chloride	10018668	HS505_00068B-14	4.6	U						8
trans-1,2-Dichloroethylene	10018668	HS505_00068B-14	4.5	U						9
1,1-Dichloroethane	10018668	HS505_00068B-14	4.7	U						10
cis-1,2-Dichloroethylene	10018668	HS505_00068B-14	4.5	U						11
Methyl ethyl ketone	10018668	HS505_00068B-14	49.0	U						12
Chloroform	10018668	HS505_00068B-14	4.6	U						13
1,1,1-Trichloroethane	10018668	HS505_00068B-14	25.0							14
Cyclohexane	10018668	HS505_00068B-14	4.4	U						15
Carbon tetrachloride	10018668	HS505_00068B-14	4.9	U						16
Benzene	10018668	HS505_00068B-14	4.5	U						17
1,2-Dichloroethane	10018668	HS505_00068B-14	4.7	U						18
Trichloroethylene	10018668	HS505_00068B-14	14.0							19
Butanol	10018668	HS505_00068B-14	55.0	U						20
Methyl isobutyl ketone	10018668	HS505_00068B-14	39.0	U						21
Toluene	10018668	HS505_00068B-14	4.1	U						22
Tetrachloroethylene	10018668	HS505_00068B-14	3.7	U						23
Chlorobenzene	10018668	HS505_00068B-14	4.2	U						24
Ethyl benzene	10018668	HS505_00068B-14	4.3	U						25
m&p-Xylene	10018668	HS505_00068B-14	3.8	U						26
o-Xylene	10018668	HS505_00068B-14	4.4	U						27
Bromoform	10018668	HS505_00068B-14	4.0	U						28
1,1,2,2-Tetrachloroethane	10018668	HS505_00068B-14	4.7	U						29
1,3,5-Trimethylbenzene	10018668	HS505_00068B-14	4.6	U						30
1,2,4-Trimethylbenzene	10018668	HS505_00068B-14	4.7	U						31
Chloromethane	10019211	HS505_00069B-15	5.2	U						1
Methanol	10019211	HS505_00069B-15	72.0	U						2
Ethyl ether	10019211	HS505_00069B-15	4.6	U						3
1,1-Dichloroethylene	10019211	HS505_00069B-15	4.9	U						4
1,1,2-Trichloro-1,2,2-trifluoroethane	10019211	HS505_00069B-15	4.7	U						5
Acetone	10019211	HS505_00069B-15	51.0	U						6
Carbon disulfide	10019211	HS505_00069B-15	5.0	U						7
Methylene chloride	10019211	HS505_00069B-15	4.6	U						8
trans-1,2-Dichloroethylene	10019211	HS505_00069B-15	4.5	U						9
1,1-Dichloroethane	10019211	HS505_00069B-15	170.0							10
cis-1,2-Dichloroethylene	10019211	HS505_00069B-15	4.5	U						11
Methyl ethyl ketone	10019211	HS505_00069B-15	49.0	U						12
Chloroform	10019211	HS505_00069B-15	4.6	U						13
1,1,1-Trichloroethane	10019211	HS505_00069B-15	210.0		D					14
Cyclohexane	10019211	HS505_00069B-15	4.4	U						15
Carbon tetrachloride	10019211	HS505_00069B-15	4.9	U						16
Benzene	10019211	HS505_00069B-15	4.5	U						17
1,2-Dichloroethane	10019211	HS505_00069B-15	4.7	U						18
Trichloroethylene	10019211	HS505_00069B-15	39.0							19
Butanol	10019211	HS505_00069B-15	55.0	U						20
Methyl isobutyl ketone	10019211	HS505_00069B-15	39.0	U						21
Toluene	10019211	HS505_00069B-15	4.1	U						22
Tetrachloroethylene	10019211	HS505_00069B-15	3.7	U						23
Chlorobenzene	10019211	HS505_00069B-15	4.2	U						24
Ethyl benzene	10019211	HS505_00069B-15	4.3	U						25
m&p-Xylene	10019211	HS505_00069B-15	3.8	U						26
o-Xylene	10019211	HS505_00069B-15	4.4	U						27
Bromoform	10019211	HS505_00069B-15	4.0	U						28
1,1,2,2-Tetrachloroethane	10019211	HS505_00069B-15	4.7	U						29
1,3,5-Trimethylbenzene	10019211	HS505_00069B-15	4.6	U						30
1,2,4-Trimethylbenzene	10019211	HS505_00069B-15	4.7	U						31
Chloromethane	10020120	HS405_00311B-09	2.3	U						1
Methanol	10020120	HS405_00311B-09	42.0	U						2
Ethyl ether	10020120	HS405_00311B-09	3.4	U						3
1,1-Dichloroethylene	10020120	HS405_00311B-09	3.0	U						4
1,1,2-Trichloro-1,2,2-trifluoroethane	10020120	HS405_00311B-09	3.0	U						5
Acetone	10020120	HS405_00311B-09	35.0	U						6
Carbon disulfide	10020120	HS405_00311B-09	3.4	U						7
Methylene chloride	10020120	HS405_00311B-09	3.7	U						8
trans-1,2-Dichloroethylene	10020120	HS405_00311B-09	3.8	U						9
1,1-Dichloroethane	10020120	HS405_00311B-09	4.6				J			10
cis-1,2-Dichloroethylene	10020120	HS405_00311B-09	3.4	U						11
Methyl ethyl ketone	10020120	HS405_00311B-09	40.0	U						12
Chloroform	10020120	HS405_00311B-09	2.8	U						13
1,1,1-Trichloroethane	10020120	HS405_00311B-09	2.6	U						14
Cyclohexane	10020120	HS405_00311B-09	3.3	U						15
Carbon tetrachloride	10020120	HS405_00311B-09	2.5	U						16
Benzene	10020120	HS405_00311B-09	3.9	U						17
1,2-Dichloroethane	10020120	HS405_00311B-09	2.5	U						18
Trichloroethylene	10020120	HS405_00311B-09	2.8	U						19
Butanol	10020120	HS405_00311B-09	40.0	U						20
Methyl isobutyl ketone	10020120	HS405_00311B-09	38.0	U						21

Analyte	Container	Sample no	Concentration (ppm)	U	D	Z	J	E	B	Analyte Order
Toluene	10020120	HS405_00311B-09	3.7	U						22
Tetrachloroethylene	10020120	HS405_00311B-09	2.8	U						23
Chlorobenzene	10020120	HS405_00311B-09	3.3	U						24
Ethyl benzene	10020120	HS405_00311B-09	3.3	U						25
m&p-Xylene	10020120	HS405_00311B-09	3.1	U						26
o-Xylene	10020120	HS405_00311B-09	3.7	U						27
Bromoform	10020120	HS405_00311B-09	3.0	U						28
1,1,2,2-Tetrachloroethane	10020120	HS405_00311B-09	3.5	U						29
1,3,5-Trimethylbenzene	10020120	HS405_00311B-09	3.2	U						30
1,2,4-Trimethylbenzene	10020120	HS405_00311B-09	3.1	U						31
Chloromethane	10020160	HS505_00069B-07	5.2	U						1
Methanol	10020160	HS505_00069B-07	72.0	U						2
Ethyl ether	10020160	HS505_00069B-07	4.6	U						3
1,1-D chloroethylene	10020160	HS505_00069B-07	4.9	U						4
1,1,2-Trichloro-1,2,2-trifluoroethane	10020160	HS505_00069B-07	4.7	U						5
Acetone	10020160	HS505_00069B-07	83.0				J			6
Carbon disulfide	10020160	HS505_00069B-07	5.0	U						7
Methylene chloride	10020160	HS505_00069B-07	4.6	U						8
trans-1,2-Dichloroethylene	10020160	HS505_00069B-07	4.5	U						9
1,1-Dichloroethane	10020160	HS505_00069B-07	16.0							10
cis-1,2-Dichloroethylene	10020160	HS505_00069B-07	4.5	U						11
Methyl ethyl ketone	10020160	HS505_00069B-07	49.0	U						12
Chloroform	10020160	HS505_00069B-07	4.6	U						13
1,1,1-Trichloroethane	10020160	HS505_00069B-07	24.0							14
Cyclohexane	10020160	HS505_00069B-07	190.0		D					15
Carbon tetrachloride	10020160	HS505_00069B-07	4.9	U						16
Benzene	10020160	HS505_00069B-07	4.5	U						17
1,2-Dichloroethane	10020160	HS505_00069B-07	4.7	U						18
Trichloroethylene	10020160	HS505_00069B-07	4.6	U						19
Butanol	10020160	HS505_00069B-07	55.0	U						20
Methyl isobutyl ketone	10020160	HS505_00069B-07	39.0	U						21
Toluene	10020160	HS505_00069B-07	4.1	U						22
Tetrachloroethylene	10020160	HS505_00069B-07	3.7	U						23
Chlorobenzene	10020160	HS505_00069B-07	4.2	U						24
Ethyl benzene	10020160	HS505_00069B-07	4.3	U						25
m&p-Xylene	10020160	HS505_00069B-07	3.8	U						26
o-Xylene	10020160	HS505_00069B-07	4.4	U						27
Bromoform	10020160	HS505_00069B-07	4.0	U						28
1,1,2,2-Tetrachloroethane	10020160	HS505_00069B-07	4.7	U						29
1,3,5-Trimethylbenzene	10020160	HS505_00069B-07	4.6	U						30
1,2,4-Trimethylbenzene	10020160	HS505_00069B-07	4.7	U						31
Chloromethane	10020162	HS505_00068B-01	5.2	U						1
Methanol	10020162	HS505_00068B-01	72.0	U						2
Ethyl ether	10020162	HS505_00068B-01	4.6	U						3
1,1-Dichloroethylene	10020162	HS505_00068B-01	40.0							4
1,1,2-Trichloro-1,2,2-trifluoroethane	10020162	HS505_00068B-01	4.7	U						5
Acetone	10020162	HS505_00068B-01	51.0	U						6
Carbon disulfide	10020162	HS505_00068B-01	5.0	U						7
Methylene chloride	10020162	HS505_00068B-01	4.6	U						8
trans-1,2-Dichloroethylene	10020162	HS505_00068B-01	4.5	U						9
1,1-Dichloroethane	10020162	HS505_00068B-01	120.0							10
cis-1,2-Dichloroethylene	10020162	HS505_00068B-01	4.5	U						11
Methyl ethyl ketone	10020162	HS505_00068B-01	49.0	U						12
Chloroform	10020162	HS505_00068B-01	4.6	U						13
1,1,1-Trichloroethane	10020162	HS505_00068B-01	120.0							14
Cyclohexane	10020162	HS505_00068B-01	4.4	U						15
Carbon tetrachloride	10020162	HS505_00068B-01	4.9	U						16
Benzene	10020162	HS505_00068B-01	4.5	U						17
1,2-Dichloroethane	10020162	HS505_00068B-01	4.7	U						18
Trichloroethylene	10020162	HS505_00068B-01	6.1				J			19
Butanol	10020162	HS505_00068B-01	55.0	U						20
Methyl isobutyl ketone	10020162	HS505_00068B-01	39.0	U						21
Toluene	10020162	HS505_00068B-01	4.1	U						22
Tetrachloroethylene	10020162	HS505_00068B-01	3.7	U						23
Chlorobenzene	10020162	HS505_00068B-01	4.2	U						24
Ethyl benzene	10020162	HS505_00068B-01	4.3	U						25
m&p-Xylene	10020162	HS505_00068B-01	3.8	U						26
o-Xylene	10020162	HS505_00068B-01	4.4	U						27
Bromoform	10020162	HS505_00068B-01	4.0	U						28
1,1,2,2-Tetrachloroethane	10020162	HS505_00068B-01	4.7	U						29
1,3,5-Trimethylbenzene	10020162	HS505_00068B-01	4.6	U						30
1,2,4-Trimethylbenzene	10020162	HS505_00068B-01	4.7	U						31
Chloromethane	10021237	HS205_00282B-20	3.2	U						1
Methanol	10021237	HS205_00282B-20	47.0	U						2
Ethyl ether	10021237	HS205_00282B-20	3.4	U						3
1,1-Dichloroethylene	10021237	HS205_00282B-20	10.0							4

Analyte	Container	Sample no.	Concentration (ppm)	U	D	Z	J	E	B	Analyte Order
1,1,2-Trichloro-1,2,2-trifluoroethane	10021237	HS205_00282B-20	3.3	U						5
Acetone	10021237	HS205_00282B-20	13.0	U						6
Carbon disulfide	10021237	HS205_00282B-20	2.5	U						7
Methylene chloride	10021237	HS205_00282B-20	1.5	U						8
trans-1,2-Dichloroethylene	10021237	HS205_00282B-20	1.2	U						9
1,1-Dichloroethane	10021237	HS205_00282B-20	16.0							10
cis-1,2-Dichloroethylene	10021237	HS205_00282B-20	1.4	U						11
Methyl ethyl ketone	10021237	HS205_00282B-20	13.0	U						12
Chloroform	10021237	HS205_00282B-20	1.6	U						13
1,1,1-Trichloroethane	10021237	HS205_00282B-20	110.0							14
Cyclohexane	10021237	HS205_00282B-20	3.0				J			15
Carbon tetrachloride	10021237	HS205_00282B-20	2.6	U						16
Benzene	10021237	HS205_00282B-20	1.4	U						17
1,2-Dichloroethane	10021237	HS205_00282B-20	2.1	U						18
Trichloroethylene	10021237	HS205_00282B-20	7.0				J			19
Butanol	10021237	HS205_00282B-20	16.0	U						20
Methyl isobutyl ketone	10021237	HS205_00282B-20	10.0	U						21
Toluene	10021237	HS205_00282B-20	1.3	U						22
Tetrachloroethylene	10021237	HS205_00282B-20	1.5	U						23
Chlorobenzene	10021237	HS205_00282B-20	1.2	U						24
Ethyl benzene	10021237	HS205_00282B-20	1.0	U						25
m&p-Xylene	10021237	HS205_00282B-20	1.1	U						26
o-Xylene	10021237	HS205_00282B-20	1.5	U						27
Bromoform	10021237	HS205_00282B-20	1.2	U						28
1,1,2,2-Tetrachloroethane	10021237	HS205_00282B-20	1.0	U						29
1,3,5-Trimethylbenzene	10021237	HS205_00282B-20	0.9	U						30
1,2,4-Trimethylbenzene	10021237	HS205_00282B-20	0.6	U						31
Chloromethane	10021811	HS505_00072B-16	5.2	U						1
Methanol	10021811	HS505_00072B-16	72.0	U						2
Ethyl ether	10021811	HS505_00072B-16	4.6	U						3
1,1-Dichloroethylene	10021811	HS505_00072B-16	4.9	U						4
1,1,2-Trichloro-1,2,2-trifluoroethane	10021811	HS505_00072B-16	4.7	U						5
Acetone	10021811	HS505_00072B-16	51.0	U						6
Carbon disulfide	10021811	HS505_00072B-16	5.0	U						7
Methylene chloride	10021811	HS505_00072B-16	4.6	U						8
trans-1,2-Dichloroethylene	10021811	HS505_00072B-16	4.5	U						9
1,1-Dichloroethane	10021811	HS505_00072B-16	18.0							10
cis-1,2-Dichloroethylene	10021811	HS505_00072B-16	4.5	U						11
Methyl ethyl ketone	10021811	HS505_00072B-16	49.0	U						12
Chloroform	10021811	HS505_00072B-16	4.6	U						13
1,1,1-Trichloroethane	10021811	HS505_00072B-16	30.0							14
Cyclohexane	10021811	HS505_00072B-16	4.4	U						15
Carbon tetrachloride	10021811	HS505_00072B-16	4.9	U						16
Benzene	10021811	HS505_00072B-16	4.5	U						17
1,2-Dichloroethane	10021811	HS505_00072B-16	4.7	U						18
Trichloroethylene	10021811	HS505_00072B-16	4.6	U						19
Butanol	10021811	HS505_00072B-16	55.0	U						20
Methyl isobutyl ketone	10021811	HS505_00072B-16	39.0	U						21
Toluene	10021811	HS505_00072B-16	4.1	U						22
Tetrachloroethylene	10021811	HS505_00072B-16	3.7	U						23
Chlorobenzene	10021811	HS505_00072B-16	4.2	U						24
Ethyl benzene	10021811	HS505_00072B-16	4.3	U						25
m&p-Xylene	10021811	HS505_00072B-16	13.0							26
o-Xylene	10021811	HS505_00072B-16	4.6				J			27
Bromoform	10021811	HS505_00072B-16	4.0	U						28
1,1,2,2-Tetrachloroethane	10021811	HS505_00072B-16	4.7	U						29
1,3,5-Trimethylbenzene	10021811	HS505_00072B-16	4.6	U						30
1,2,4-Trimethylbenzene	10021811	HS505_00072B-16	4.7	U						31
Chloromethane	10022339	HS405_00311B-14	2.3	U						1
Methanol	10022339	HS405_00311B-14	42.0	U						2
Ethyl ether	10022339	HS405_00311B-14	3.4	U						3
1,1-Dichloroethylene	10022339	HS405_00311B-14	19.0							4
1,1,2-Trichloro-1,2,2-trifluoroethane	10022339	HS405_00311B-14	3.0	U						5
Acetone	10022339	HS405_00311B-14	35.0	U						6
Carbon disulfide	10022339	HS405_00311B-14	3.4	U						7
Methylene chloride	10022339	HS405_00311B-14	3.7	U						8
trans-1,2-Dichloroethylene	10022339	HS405_00311B-14	3.8	U						9
1,1-Dichloroethane	10022339	HS405_00311B-14	20.0							10
cis-1,2-Dichloroethylene	10022339	HS405_00311B-14	3.4	U						11
Methyl ethyl ketone	10022339	HS405_00311B-14	40.0	U						12
Chloroform	10022339	HS405_00311B-14	2.8	U						13
1,1,1-Trichloroethane	10022339	HS405_00311B-14	140.0							14
Cyclohexane	10022339	HS405_00311B-14	3.3	U						15
Carbon tetrachloride	10022339	HS405_00311B-14	2.5	U						16
Benzene	10022339	HS405_00311B-14	3.9	U						17
1,2-Dichloroethane	10022339	HS405_00311B-14	2.5	U						18

Lot BN004 01
Headspace Gas Analytical Data

Print Date 12/28/2005

Analyte	Container	Sample no	Concentration (ppm)	U	D	Z	J	E	B	Analyte Order
Trichloroethylene	10022339	HS405_00311B-14	17.0							19
Butanol	10022339	HS405_00311B-14	40.0	U						20
Methyl isobutyl ketone	10022339	HS405_00311B-14	38.0	U						21
Toluene	10022339	HS405_00311B-14	3.7	U						22
Tetrachloroethylene	10022339	HS405_00311B-14	2.8	U						23
Chlorobenzene	10022339	HS405_00311B-14	3.3	U						24
Ethyl benzene	10022339	HS405_00311B-14	3.3	U						25
m&p-Xylene	10022339	HS405_00311B-14	3.1	U						26
o-Xylene	10022339	HS405_00311B-14	3.7	U						27
Bromoform	10022339	HS405_00311B-14	3.0	U						28
1,1,2,2-Tetrachloroethane	10022339	HS405_00311B-14	3.5	U						29
1,3,5-Trimethylbenzene	10022339	HS405_00311B-14	3.2	U						30
1,2,4-Trimethylbenzene	10022339	HS405_00311B-14	3.1	U						31
Chloromethane	10022340	HS505_00069B-20	5.2	U						1
Methanol	10022340	HS505_00069B-20	72.0	U						2
Ethyl ether	10022340	HS505_00069B-20	4.6	U						3
1,1-Dichloroethylene	10022340	HS505_00069B-20	9.4				J			4
1,1,2-Trichloro-1,2,2-trifluoroethane	10022340	HS505_00069B-20	4.7	U						5
Acetone	10022340	HS505_00069B-20	51.0	U						6
Carbon disulfide	10022340	HS505_00069B-20	5.0	U						7
Methylene chloride	10022340	HS505_00069B-20	4.6	U						8
trans-1,2-Dichloroethylene	10022340	HS505_00069B-20	4.5	U						9
1,1-Dichloroethane	10022340	HS505_00069B-20	31.0							10
cis-1,2-Dichloroethylene	10022340	HS505_00069B-20	4.5	U						11
Methyl ethyl ketone	10022340	HS505_00069B-20	49.0	U						12
Chloroform	10022340	HS505_00069B-20	4.6	U						13
1,1,1-Trichloroethane	10022340	HS505_00069B-20	34.0							14
Cyclohexane	10022340	HS505_00069B-20	4.4	U						15
Carbon tetrachloride	10022340	HS505_00069B-20	4.9	U						16
Benzene	10022340	HS505_00069B-20	4.5	U						17
1,2-Dichloroethane	10022340	HS505_00069B-20	4.7	U						18
Trichloroethylene	10022340	HS505_00069B-20	6.4				J			19
Butanol	10022340	HS505_00069B-20	55.0	U						20
Methyl isobutyl ketone	10022340	HS505_00069B-20	39.0	U						21
Toluene	10022340	HS505_00069B-20	8.8				J			22
Tetrachloroethylene	10022340	HS505_00069B-20	3.7	U						23
Chlorobenzene	10022340	HS505_00069B-20	4.2	U						24
Ethyl benzene	10022340	HS505_00069B-20	1100.0		D					25
m&p-Xylene	10022340	HS505_00069B-20	3500.0		D					26
o-Xylene	10022340	HS505_00069B-20	630.0		D					27
Bromoform	10022340	HS505_00069B-20	4.0	U						28
1,1,2,2-Tetrachloroethane	10022340	HS505_00069B-20	4.7	U						29
1,3,5-Trimethylbenzene	10022340	HS505_00069B-20	4.6	U						30
1,2,4-Trimethylbenzene	10022340	HS505_00069B-20	4.7	U						31
Chloromethane	10022342	HS505_00079B-06	5.2	U						1
Methanol	10022342	HS505_00079B-06	72.0	U						2
Ethyl ether	10022342	HS505_00079B-06	4.6	U						3
1,1-Dichloroethylene	10022342	HS505_00079B-06	4.9	U						4
1,1,2-Trichloro-1,2,2-trifluoroethane	10022342	HS505_00079B-06	4.7	U						5
Acetone	10022342	HS505_00079B-06	51.0	U						6
Carbon disulfide	10022342	HS505_00079B-06	5.0	U						7
Methylene chloride	10022342	HS505_00079B-06	4.6	U						8
trans-1,2-Dichloroethylene	10022342	HS505_00079B-06	4.5	U						9
1,1-Dichloroethane	10022342	HS505_00079B-06	55.0							10
cis-1,2-Dichloroethylene	10022342	HS505_00079B-06	4.5	U						11
Methyl ethyl ketone	10022342	HS505_00079B-06	49.0	U						12
Chloroform	10022342	HS505_00079B-06	4.6	U						13
1,1,1-Trichloroethane	10022342	HS505_00079B-06	4.6	U						14
Cyclohexane	10022342	HS505_00079B-06	8.4				J			15
Carbon tetrachloride	10022342	HS505_00079B-06	4.9	U						16
Benzene	10022342	HS505_00079B-06	4.9				J			17
1,2-Dichloroethane	10022342	HS505_00079B-06	4.7	U						18
Trichloroethylene	10022342	HS505_00079B-06	4.6	U						19
Butanol	10022342	HS505_00079B-06	55.0	U						20
Methyl isobutyl ketone	10022342	HS505_00079B-06	39.0	U						21
Toluene	10022342	HS505_00079B-06	43.0							22
Tetrachloroethylene	10022342	HS505_00079B-06	3.7	U						23
Chlorobenzene	10022342	HS505_00079B-06	4.2	U						24
Ethyl benzene	10022342	HS505_00079B-06	930.0		D					25
m&p-Xylene	10022342	HS505_00079B-06	2900.0		D					26
o-Xylene	10022342	HS505_00079B-06	590.0		D					27
Bromoform	10022342	HS505_00079B-06	4.0	U						28
1,1,2,2-Tetrachloroethane	10022342	HS505_00079B-06	4.7	U						29
1,3,5-Trimethylbenzene	10022342	HS505_00079B-06	4.6	U						30
1,2,4-Trimethylbenzene	10022342	HS505_00079B-06	4.7	U						31
Chloromethane	10022344	HS505_00071B-18	5.2	U						1

Analyte	Container	Sample no.	Concentration (ppm)	U	D	Z	J	E	B	Analyte Order
Methanol	10022344	HS505_00071B-18	72.0	U						2
Ethyl ether	10022344	HS505_00071B-18	4.6	U						3
1,1-Dichloroethylene	10022344	HS505_00071B-18	4.9	U						4
1,1,2-Trichloro-1,2,2-trifluoroethane	10022344	HS505_00071B-18	4.7	U						5
Acetone	10022344	HS505_00071B-18	51.0	U						6
Carbon disulfide	10022344	HS505_00071B-18	5.0	U						7
Methylene chloride	10022344	HS505_00071B-18	4.6	U						8
trans-1,2-Dichloroethylene	10022344	HS505_00071B-18	4.5	U						9
1,1-Dichloroethane	10022344	HS505_00071B-18	15.0							10
cis-1,2-Dichloroethylene	10022344	HS505_00071B-18	4.5	U						11
Methyl ethyl ketone	10022344	HS505_00071B-18	49.0	U						12
Chloroform	10022344	HS505_00071B-18	4.6	U						13
1,1,1-Trichloroethane	10022344	HS505_00071B-18	4.6	U						14
Cyclohexane	10022344	HS505_00071B-18	4.4	U						15
Carbon tetrachloride	10022344	HS505_00071B-18	4.9	U						16
Benzene	10022344	HS505_00071B-18	4.5	U						17
1,2-Dichloroethane	10022344	HS505_00071B-18	4.7	U						18
Trichloroethylene	10022344	HS505_00071B-18	4.6	U						19
Butanol	10022344	HS505_00071B-18	55.0	U						20
Methyl isobutyl ketone	10022344	HS505_00071B-18	39.0	U						21
Toluene	10022344	HS505_00071B-18	4.1	U						22
Tetrachloroethylene	10022344	HS505_00071B-18	3.7	U						23
Chlorobenzene	10022344	HS505_00071B-18	4.2	U						24
Ethyl benzene	10022344	HS505_00071B-18	4.3	U						25
m&p-Xylene	10022344	HS505_00071B-18	3.8	U						26
o-Xylene	10022344	HS505_00071B-18	4.4	U						27
Bromoform	10022344	HS505_00071B-18	4.0	U						28
1,1,2,2-Tetrachloroethane	10022344	HS505_00071B-18	4.7	U						29
1,3,5-Trimethylbenzene	10022344	HS505_00071B-18	4.6	U						30
1,2,4-Trimethylbenzene	10022344	HS505_00071B-18	4.7	U						31
Chloromethane	10022515	HS505_00074B-04	5.2	U						1
Methanol	10022515	HS505_00074B-04	72.0	U						2
Ethyl ether	10022515	HS505_00074B-04	4.6	U						3
1,1-Dichloroethylene	10022515	HS505_00074B-04	190.0		D					4
1,1,2-Trichloro-1,2,2-trifluoroethane	10022515	HS505_00074B-04	4.7	U						5
Acetone	10022515	HS505_00074B-04	51.0	U						6
Carbon disulfide	10022515	HS505_00074B-04	5.0	U						7
Methylene chloride	10022515	HS505_00074B-04	4.6	U						8
trans-1,2-Dichloroethylene	10022515	HS505_00074B-04	4.5	U						9
1,1-Dichloroethane	10022515	HS505_00074B-04	43.0							10
cis-1,2-Dichloroethylene	10022515	HS505_00074B-04	4.5	U						11
Methyl ethyl ketone	10022515	HS505_00074B-04	49.0	U						12
Chloroform	10022515	HS505_00074B-04	4.6	U						13
1,1,1-Trichloroethane	10022515	HS505_00074B-04	780.0		D					14
Cyclohexane	10022515	HS505_00074B-04	4.4	U						15
Carbon tetrachloride	10022515	HS505_00074B-04	4.9	U						16
Benzene	10022515	HS505_00074B-04	4.5	U						17
1,2-Dichloroethane	10022515	HS505_00074B-04	4.7	U						18
Trichloroethylene	10022515	HS505_00074B-04	110.0							19
Butanol	10022515	HS505_00074B-04	55.0	U						20
Methyl isobutyl ketone	10022515	HS505_00074B-04	39.0	U						21
Toluene	10022515	HS505_00074B-04	4.1	U						22
Tetrachloroethylene	10022515	HS505_00074B-04	3.7	U						23
Chlorobenzene	10022515	HS505_00074B-04	4.2	U						24
Ethyl benzene	10022515	HS505_00074B-04	4.3	U						25
m&p-Xylene	10022515	HS505_00074B-04	3.8	U						26
o-Xylene	10022515	HS505_00074B-04	4.4	U						27
Bromoform	10022515	HS505_00074B-04	4.0	U						28
1,1,2,2-Tetrachloroethane	10022515	HS505_00074B-04	4.7	U						29
1,3,5-Trimethylbenzene	10022515	HS505_00074B-04	4.6	U						30
1,2,4-Trimethylbenzene	10022515	HS505_00074B-04	4.7	U						31
Chloromethane	10022517	HS405_00311B-21	2.3	U						1
Methanol	10022517	HS405_00311B-21	42.0	U						2
Ethyl ether	10022517	HS405_00311B-21	3.4	U						3
1,1-Dichloroethylene	10022517	HS405_00311B-21	36.0							4
1,1,2-Trichloro-1,2,2-trifluoroethane	10022517	HS405_00311B-21	3.0	U						5
Acetone	10022517	HS405_00311B-21	35.0	U						6
Carbon disulfide	10022517	HS405_00311B-21	3.4	U						7
Methylene chloride	10022517	HS405_00311B-21	3.7	U						8
trans-1,2-Dichloroethylene	10022517	HS405_00311B-21	3.8	U						9
1,1-Dichloroethane	10022517	HS405_00311B-21	46.0							10
cis-1,2-Dichloroethylene	10022517	HS405_00311B-21	3.4	U						11
Methyl ethyl ketone	10022517	HS405_00311B-21	40.0	U						12
Chloroform	10022517	HS405_00311B-21	2.8	U						13
1,1,1-Trichloroethane	10022517	HS405_00311B-21	330.0		D					14
Cyclohexane	10022517	HS405_00311B-21	3.3	U						15

Headspace Gas Analytical Data

Analyte	Container	Sample no	Concentration (ppm)	U	D	Z	J	L	B	Analyte Order
Carbon tetrachloride	10022517	HS405_00311B-21	2.5	U						16
Benzene	10022517	HS405_00311B-21	3.9	U						17
1,2-Dichloroethane	10022517	HS405_00311B-21	2.5	U						18
Trichloroethylene	10022517	HS405_00311B-21	72.0							19
Butanol	10022517	HS405_00311B-21	40.0	U						20
Methyl isobutyl ketone	10022517	HS405_00311B-21	38.0	U						21
Toluene	10022517	HS405_00311B-21	3.7	U						22
Tetrachloroethylene	10022517	HS405_00311B-21	2.8	U						23
Chlorobenzene	10022517	HS405_00311B-21	3.3	U						24
Ethyl benzene	10022517	HS405_00311B-21	3.3	U						25
m&p-Xylene	10022517	HS405_00311B-21	3.1	U						26
o-Xylene	10022517	HS405_00311B-21	3.7	U						27
Bromoform	10022517	HS405_00311B-21	3.0	U						28
1,1,2,2-Tetrachloroethane	10022517	HS405_00311B-21	3.5	U						29
1,3,5-Trimethylbenzene	10022517	HS405_00311B-21	3.2	U						30
1,2,4-Trimethylbenzene	10022517	HS405_00311B-21	3.1	U						31
Chloromethane	10022848	HS405_00311B-05	2.3	U						1
Methanol	10022848	HS405_00311B-05	42.0	U						2
Ethyl ether	10022848	HS405_00311B-05	3.4	U						3
1,1-Dichloroethylene	10022848	HS405_00311B-05	3.0	U						4
1,1,2-Trichloro-1,2,2-trifluoroethane	10022848	HS405_00311B-05	3.0	U						5
Acetone	10022848	HS405_00311B-05	35.0	U						6
Carbon disulfide	10022848	HS405_00311B-05	3.4	U						7
Methylene chloride	10022848	HS405_00311B-05	3.7	U						8
trans-1,2-Dichloroethylene	10022848	HS405_00311B-05	3.8	U						9
1,1-Dichloroethane	10022848	HS405_00311B-05	21.0							10
cis-1,2-Dichloroethylene	10022848	HS405_00311B-05	3.4	U						11
Methyl ethyl ketone	10022848	HS405_00311B-05	40.0	U						12
Chloroform	10022848	HS405_00311B-05	2.8	U						13
1,1,1-Trichloroethane	10022848	HS405_00311B-05	51.0							14
Cyclohexane	10022848	HS405_00311B-05	11.0							15
Carbon tetrachloride	10022848	HS405_00311B-05	2.5	U						16
Benzene	10022848	HS405_00311B-05	3.9	U						17
1,2-Dichloroethane	10022848	HS405_00311B-05	2.5	U						18
Trichloroethylene	10022848	HS405_00311B-05	2.8	U						19
Butanol	10022848	HS405_00311B-05	40.0	U						20
Methyl isobutyl ketone	10022848	HS405_00311B-05	38.0	U						21
Toluene	10022848	HS405_00311B-05	3.7	U						22
Tetrachloroethylene	10022848	HS405_00311B-05	2.8	U						23
Chlorobenzene	10022848	HS405_00311B-05	3.3	U						24
Ethyl benzene	10022848	HS405_00311B-05	3.3	U						25
m&p-Xylene	10022848	HS405_00311B-05	3.1	U						26
o-Xylene	10022848	HS405_00311B-05	3.7	U						27
Bromoform	10022848	HS405_00311B-05	3.0	U						28
1,1,2,2-Tetrachloroethane	10022848	HS405_00311B-05	3.5	U						29
1,3,5-Trimethylbenzene	10022848	HS405_00311B-05	3.2	U						30
1,2,4-Trimethylbenzene	10022848	HS405_00311B-05	3.1	U						31
Chloromethane	10022859	HS405_00311B-15	2.3	U						1
Methanol	10022859	HS405_00311B-15	140.0							2
Ethyl ether	10022859	HS405_00311B-15	3.4	U						3
1,1-Dichloroethylene	10022859	HS405_00311B-15	3.0	U						4
1,1,2-Trichloro-1,2,2-trifluoroethane	10022859	HS405_00311B-15	3.0	U						5
Acetone	10022859	HS405_00311B-15	270.0							6
Carbon disulfide	10022859	HS405_00311B-15	3.4	U						7
Methylene chloride	10022859	HS405_00311B-15	3.7	U						8
trans-1,2-Dichloroethylene	10022859	HS405_00311B-15	3.8	U						9
1,1-Dichloroethane	10022859	HS405_00311B-15	200.0		D					10
cis-1,2-Dichloroethylene	10022859	HS405_00311B-15	3.4	U						11
Methyl ethyl ketone	10022859	HS405_00311B-15	40.0	U						12
Chloroform	10022859	HS405_00311B-15	2.8	U						13
1,1,1-Trichloroethane	10022859	HS405_00311B-15	2.6	U						14
Cyclohexane	10022859	HS405_00311B-15	3.3	U						15
Carbon tetrachloride	10022859	HS405_00311B-15	2.5	U						16
Benzene	10022859	HS405_00311B-15	3.9	U						17
1,2-Dichloroethane	10022859	HS405_00311B-15	2.5	U						18
Trichloroethylene	10022859	HS405_00311B-15	16.0							19
Butanol	10022859	HS405_00311B-15	40.0	U						20
Methyl isobutyl ketone	10022859	HS405_00311B-15	38.0	U						21
Toluene	10022859	HS405_00311B-15	41.0							22
Tetrachloroethylene	10022859	HS405_00311B-15	2.8	U						23
Chlorobenzene	10022859	HS405_00311B-15	3.3	U						24
Ethyl benzene	10022859	HS405_00311B-15	520.0		D					25
m&p-Xylene	10022859	HS405_00311B-15	2200.0		D					26
o-Xylene	10022859	HS405_00311B-15	470.0		D					27
Bromoform	10022859	HS405_00311B-15	3.0	U						28
1,1,2,2-Tetrachloroethane	10022859	HS405_00311B-15	3.5	U						29

Analyte	Container	Sample no	Concentration (ppm)	U	D	Z	J	E	B	Analyte Order
1,3,5-Trimethylbenzene	10022859	HS405_00311B-15	3.2	U						30
1,2,4-Trimethylbenzene	10022859	HS405_00311B-15	3.1	U						31
Chloromethane	10025352	HS505_00069B-19	5.2	U						1
Methanol	10025352	HS505_00069B-19	72.0	U						2
Ethyl ether	10025352	HS505_00069B-19	4.6	U						3
1,1-Dichloroethylene	10025352	HS505_00069B-19	18.0							4
1,1,2-Trichloro-1,2,2-trifluoroethane	10025352	HS505_00069B-19	4.7	U						5
Acetone	10025352	HS505_00069B-19	51.0	U						6
Carbon disulfide	10025352	HS505_00069B-19	5.0	U						7
Methylene chloride	10025352	HS505_00069B-19	4.6	U						8
trans-1,2-Dichloroethylene	10025352	HS505_00069B-19	4.5	U						9
1,1-Dichloroethane	10025352	HS505_00069B-19	44.0							10
cis-1,2-Dichloroethylene	10025352	HS505_00069B-19	4.5	U						11
Methyl ethyl ketone	10025352	HS505_00069B-19	49.0	U						12
Chloroform	10025352	HS505_00069B-19	4.6	U						13
1,1,1-Trichloroethane	10025352	HS505_00069B-19	120.0							14
Cyclohexane	10025352	HS505_00069B-19	4.4	U						15
Carbon tetrachloride	10025352	HS505_00069B-19	4.9	U						16
Benzene	10025352	HS505_00069B-19	4.5	U						17
1,2-Dichloroethane	10025352	HS505_00069B-19	4.7	U						18
Trichloroethylene	10025352	HS505_00069B-19	36.0							19
Butanol	10025352	HS505_00069B-19	55.0	U						20
Methyl isobutyl ketone	10025352	HS505_00069B-19	39.0	U						21
Toluene	10025352	HS505_00069B-19	4.1	U						22
Tetrachloroethylene	10025352	HS505_00069B-19	3.7	U						23
Chlorobenzene	10025352	HS505_00069B-19	4.2	U						24
Ethyl benzene	10025352	HS505_00069B-19	4.3	U						25
m&p-Xylene	10025352	HS505_00069B-19	3.8	U						26
o-Xylene	10025352	HS505_00069B-19	4.4	U						27
Bromoform	10025352	HS505_00069B-19	4.0	U						28
1,1,2,2-Tetrachloroethane	10025352	HS505_00069B-19	4.7	U						29
1,3,5-Trimethylbenzene	10025352	HS505_00069B-19	4.6	U						30
1,2,4-Trimethylbenzene	10025352	HS505_00069B-19	4.7	U						31
Chloromethane	10025354	HS505_00068B-09	5.2	U						1
Methanol	10025354	HS505_00068B-09	72.0	U						2
Ethyl ether	10025354	HS505_00068B-09	4.6	U						3
1,1-Dichloroethylene	10025354	HS505_00068B-09	74.0							4
1,1,2-Trichloro-1,2,2 trifluoroethane	10025354	HS505_00068B-09	4.7	U						5
Acetone	10025354	HS505_00068B-09	51.0	U						6
Carbon disulfide	10025354	HS505_00068B-09	5.0	U						7
Methylene chloride	10025354	HS505_00068B-09	4.6	U						8
trans-1,2-Dichloroethylene	10025354	HS505_00068B-09	4.5	U						9
1,1-Dichloroethane	10025354	HS505_00068B-09	80.0							10
cis-1,2-Dichloroethylene	10025354	HS505_00068B-09	4.5	U						11
Methyl ethyl ketone	10025354	HS505_00068B-09	49.0	U						12
Chloroform	10025354	HS505_00068B-09	4.6	U						13
1,1,1-Trichloroethane	10025354	HS505_00068B-09	740.0		D					14
Cyclohexane	10025354	HS505_00068B-09	4.4	U						15
Carbon tetrachloride	10025354	HS505_00068B-09	4.9	U						16
Benzene	10025354	HS505_00068B-09	4.5	U						17
1,2-Dichloroethane	10025354	HS505_00068B-09	4.7	U						18
Trichloroethylene	10025354	HS505_00068B-09	180.0							19
Butanol	10025354	HS505_00068B-09	55.0	U						20
Methyl isobutyl ketone	10025354	HS505_00068B-09	39.0	U						21
Toluene	10025354	HS505_00068B-09	4.1	U						22
Tetrachloroethylene	10025354	HS505_00068B-09	3.7	U						23
Chlorobenzene	10025354	HS505_00068B-09	4.2	U						24
Ethyl benzene	10025354	HS505_00068B-09	4.3	U						25
m&p-Xylene	10025354	HS505_00068B-09	3.8	U						26
o-Xylene	10025354	HS505_00068B-09	4.4	U						27
Bromoform	10025354	HS505_00068B-09	4.0	U						28
1,1,2,2-Tetrachloroethane	10025354	HS505_00068B-09	4.7	U						29
1,3,5-Trimethylbenzene	10025354	HS505_00068B-09	4.6	U						30
1,2,4-Trimethylbenzene	10025354	HS505_00068B-09	4.7	U						31
Chloromethane	10025976	HS405_00311B-10	2.3	U						1
Methanol	10025976	HS405_00311B-10	42.0	U						2
Ethyl ether	10025976	HS405_00311B-10	3.4	U						3
1,1-Dichloroethylene	10025976	HS405_00311B-10	3.0	U						4
1,1,2-Trichloro-1,2,2-trifluoroethane	10025976	HS405_00311B-10	3.0	U						5
Acetone	10025976	HS405_00311B-10	42.0				J			6
Carbon disulfide	10025976	HS405_00311B-10	3.4	U						7
Methylene chloride	10025976	HS405_00311B-10	3.7	U						8
trans-1,2-Dichloroethylene	10025976	HS405_00311B-10	3.8	U						9
1,1-Dichloroethane	10025976	HS405_00311B-10	6.9				J			10
cis-1,2-Dichloroethylene	10025976	HS405_00311B-10	3.4	U						11
Methyl ethyl ketone	10025976	HS405_00311B-10	40.0	U						12

Analyte	Container	Sample no	Concentration (ppm)	U	D	Z	J	E	B	Analyte Order
Chloroform	10025976	HS405_00311B-10	2.8	U						13
1,1,1-Trichloroethane	10025976	HS405_00311B-10	2.8	U						14
Cyclohexane	10025976	HS405_00311B-10	3.3	U						15
Carbon tetrachloride	10025976	HS405_00311B-10	2.5	U						16
Benzene	10025976	HS405_00311B-10	3.9	U						17
1,2-Dichloroethane	10025976	HS405_00311B-10	2.5	U						18
Trichloroethylene	10025976	HS405_00311B-10	2.8	U						19
Butanol	10025976	HS405_00311B-10	40.0	U						20
Methyl isobutyl ketone	10025976	HS405_00311B-10	38.0	U						21
Toluene	10025976	HS405_00311B-10	3.7	U						22
Tetrachloroethylene	10025976	HS405_00311B-10	2.8	U						23
Chlorobenzene	10025976	HS405_00311B-10	3.3	U						24
Ethyl benzene	10025976	HS405_00311B-10	3.3	U						25
m&p-Xylene	10025976	HS405_00311B-10	3.1	U						26
o-Xylene	10025976	HS405_00311B-10	3.7	U						27
Bromoform	10025976	HS405_00311B-10	3.0	U						28
1,1,2,2-Tetrachloroethane	10025976	HS405_00311B-10	3.5	U						29
1,3,5-Trimethylbenzene	10025976	HS405_00311B-10	3.2	U						30
1,2,4-Trimethylbenzene	10025976	HS405_00311B-10	3.1	U						31
Chloromethane	10026005	HS405_00331B-04	2.3	U						1
Methanol	10026005	HS405_00331B-04	94.0				J			2
Ethyl ether	10026005	HS405_00331B-04	3.4	U						3
1,1-Dichloroethylene	10026005	HS405_00331B-04	3.0	U						4
1,1,2-Trichloro-1,2,2-trifluoroethane	10026005	HS405_00331B-04	3.0	U						5
Acetone	10026005	HS405_00331B-04	35.0	U						6
Carbon disulfide	10026005	HS405_00331B-04	3.4	U						7
Methylene chloride	10026005	HS405_00331B-04	3.7	U						8
trans-1,2-Dichloroethylene	10026005	HS405_00331B-04	3.8	U						9
1,1-Dichloroethane	10026005	HS405_00331B-04	38.0							10
cis-1,2-Dichloroethylene	10026005	HS405_00331B-04	3.4	U						11
Methyl ethyl ketone	10026005	HS405_00331B-04	40.0	U						12
Chloroform	10026006	HS405_00331B-04	2.8	U						13
1,1,1-Trichloroethane	10026005	HS405_00331B-04	20.0							14
Cyclohexane	10026005	HS405_00331B-04	3.3	U						15
Carbon tetrachloride	10026005	HS405_00331B-04	2.5	U						16
Benzene	10026005	HS405_00331B-04	3.9	U						17
1,2-Dichloroethane	10026005	HS405_00331B-04	2.5	U						18
Trichloroethylene	10026005	HS405_00331B-04	6.0				J			19
Butanol	10026005	HS405_00331B-04	40.0	U						20
Methyl isobutyl ketone	10026005	HS405_00331B-04	38.0	U						21
Toluene	10026005	HS405_00331B-04	3.7	U						22
Tetrachloroethylene	10026005	HS405_00331B-04	2.8	U						23
Chlorobenzene	10026005	HS405_00331B-04	3.3	U						24
Ethyl benzene	10026005	HS405_00331B-04	3.3	U						25
m&p-Xylene	10026005	HS405_00331B-04	3.1	U						26
o-Xylene	10026005	HS405_00331B-04	3.7	U						27
Bromoform	10026005	HS405_00331B-04	3.0	U						28
1,1,2,2-Tetrachloroethane	10026005	HS405_00331B-04	3.5	U						29
1,3,5-Trimethylbenzene	10026005	HS405_00331B-04	3.2	U						30
1,2,4-Trimethylbenzene	10026005	HS405_00331B-04	3.1	U						31
Chloromethane	10027247	HS505_00083B-16	5.2	U						1
Methanol	10027247	HS505_00083B-16	72.0	U						2
Ethyl ether	10027247	HS505_00083B-16	4.6	U						3
1,1-Dichloroethylene	10027247	HS505_00083B-16	26.0							4
1,1,2-Trichloro-1,2,2-trifluoroethane	10027247	HS505_00083B-16	4.7	U						5
Acetone	10027247	HS505_00083B-16	51.0	U						6
Carbon disulfide	10027247	HS505_00083B-16	5.0	U						7
Methylene chloride	10027247	HS505_00083B-16	4.6	U						8
trans-1,2-Dichloroethylene	10027247	HS505_00083B-16	4.5	U						9
1,1-Dichloroethane	10027247	HS505_00083B-16	18.0							10
cis-1,2-Dichloroethylene	10027247	HS505_00083B-16	4.5	U						11
Methyl ethyl ketone	10027247	HS505_00083B-16	49.0	U						12
Chloroform	10027247	HS505_00083B-16	4.6	U						13
1,1,1-Trichloroethane	10027247	HS505_00083B-16	160.0							14
Cyclohexane	10027247	HS505_00083B-16	4.4	U						15
Carbon tetrachloride	10027247	HS505_00083B-16	4.9	U						16
Benzene	10027247	HS505_00083B-16	4.5	U						17
1,2-Dichloroethane	10027247	HS505_00083B-16	4.7	U						18
Trichloroethylene	10027247	HS505_00083B-16	26.0							19
Butanol	10027247	HS505_00083B-16	55.0	U						20
Methyl isobutyl ketone	10027247	HS505_00083B-16	39.0	U						21
Toluene	10027247	HS505_00083B-16	4.1	U						22
Tetrachloroethylene	10027247	HS505_00083B-16	3.7	U						23
Chlorobenzene	10027247	HS505_00083B-16	4.2	U						24
Ethyl benzene	10027247	HS505_00083B-16	4.3	U						25
m&p-Xylene	10027247	HS505_00083B-16	3.8	U						26

Analyte	Container	Sample no	Concentration (ppm)		D	Z	J	E	B	Analyte Order
o-Xylene	10027247	HS505_00083B-16	4.4	U						27
Bromoform	10027247	HS505_00083B-16	4.0	U						28
1,1,2,2-Tetrachloroethane	10027247	HS505_00083B-16	4.7	U						29
1,3,5-Trimethylbenzene	10027247	HS505_00083B-16	4.6	U						30
1,2,4-Trimethylbenzene	10027247	HS505_00083B-16	4.7	U						31
Chloromethane	10029038	HS405_00312B-05	2.3	U						1
Methanol	10029038	HS405_00312B-05	42.0	U						2
Ethyl ether	10029038	HS405_00312B-05	3.4	U						3
1,1-Dichloroethylene	10029038	HS405_00312B-05	33.0							4
1,1,2-Trichloro-1,2,2-trifluoroethane	10029038	HS405_00312B-05	3.0	U						5
Acetone	10029038	HS405_00312B-05	35.0	U						6
Carbon disulfide	10029038	HS405_00312B-05	3.4	U						7
Methylene chloride	10029038	HS405_00312B-05	3.7	U						8
trans-1,2-Dichloroethylene	10029038	HS405_00312B-05	3.8	U						9
1,1-Dichloroethane	10029038	HS405_00312B-05	60.0							10
cis-1,2-Dichloroethylene	10029038	HS405_00312B-05	3.4	U						11
Methyl ethyl ketone	10029038	HS405_00312B-05	40.0	U						12
Chloroform	10029038	HS405_00312B-05	2.8	U						13
1,1,1-Trichloroethane	10029038	HS405_00312B-05	280.0		D					14
Cyclohexane	10029038	HS405_00312B-05	3.3	U						15
Carbon tetrachloride	10029038	HS405_00312B-05	2.5	U						16
Benzene	10029038	HS405_00312B-05	3.9	U						17
1,2-Dichloroethane	10029038	HS405_00312B-05	2.5	U						18
Trichloroethylene	10029038	HS405_00312B-05	54.0							19
Butanol	10029038	HS405_00312B-05	40.0	U						20
Methyl isobutyl ketone	10029038	HS405_00312B-05	38.0	U						21
Toluene	10029038	HS405_00312B-05	7.1				J			22
Tetrachloroethylene	10029038	HS405_00312B-05	2.8	U						23
Chlorobenzene	10029038	HS405_00312B-05	3.3	U						24
Ethyl benzene	10029038	HS405_00312B-05	3.3	U						25
m&p-Xylene	10029038	HS405_00312B-05	3.1	U						26
o-Xylene	10029038	HS405_00312B-05	3.7	U						27
Bromoform	10029038	HS405_00312B-05	3.0	U						28
1,1,2,2-Tetrachloroethane	10029038	HS405_00312B-05	3.5	U						29
1,3,5-Trimethylbenzene	10029038	HS405_00312B-05	3.2	U						30
1,2,4-Trimethylbenzene	10029038	HS405_00312B-05	3.1	U						31
Chloromethane	10031650	HS405_00341B-07	2.3	U						1
Methanol	10031650	HS405_00341B-07	42.0	U						2
Ethyl ether	10031650	HS405_00341B-07	3.4	U						3
1,1-Dichloroethylene	10031650	HS405_00341B-07	44.0							4
1,1,2-Trichloro-1,2,2-trifluoroethane	10031650	HS405_00341B-07	3.0	U						5
Acetone	10031650	HS405_00341B-07	35.0	U						6
Carbon disulfide	10031650	HS405_00341B-07	3.4	U						7
Methylene chloride	10031650	HS405_00341B-07	3.7	U						8
trans-1,2-Dichloroethylene	10031650	HS405_00341B-07	3.8	U						9
1,1-Dichloroethane	10031650	HS405_00341B-07	66.0							10
cis-1,2-Dichloroethylene	10031650	HS405_00341B-07	3.4	U						11
Methyl ethyl ketone	10031650	HS405_00341B-07	40.0	U						12
Chloroform	10031650	HS405_00341B-07	2.8	U						13
1,1,1-Trichloroethane	10031650	HS405_00341B-07	220.0		D					14
Cyclohexane	10031650	HS405_00341B-07	26.0							15
Carbon tetrachloride	10031650	HS405_00341B-07	2.5	U						16
Benzene	10031650	HS405_00341B-07	3.9	U						17
1,2-Dichloroethane	10031650	HS405_00341B-07	2.5	U						18
Trichloroethylene	10031650	HS405_00341B-07	32.0							19
Butanol	10031650	HS405_00341B-07	40.0	U						20
Methyl isobutyl ketone	10031650	HS405_00341B-07	38.0	U						21
Toluene	10031650	HS405_00341B-07	3.7	U						22
Tetrachloroethylene	10031650	HS405_00341B-07	2.8	U						23
Chlorobenzene	10031650	HS405_00341B-07	3.3	U						24
Ethyl benzene	10031650	HS405_00341B-07	3.3	U						25
m&p-Xylene	10031650	HS405_00341B-07	3.1	U						26
o-Xylene	10031650	HS405_00341B-07	3.7	U						27
Bromoform	10031650	HS405_00341B-07	3.0	U						28
1,1,2,2-Tetrachloroethane	10031650	HS405_00341B-07	3.5	U						29
1,3,5-Trimethylbenzene	10031650	HS405_00341B-07	3.2	U						30
1,2,4-Trimethylbenzene	10031650	HS405_00341B-07	3.1	U						31
Chloromethane	10031810	HS405_00312B-09	2.3	U						1
Methanol	10031810	HS405_00312B-09	42.0	U						2
Ethyl ether	10031810	HS405_00312B-09	3.4	U						3
1,1-Dichloroethylene	10031810	HS405_00312B-09	3.0	U						4
1,1,2-Trichloro-1,2,2-trifluoroethane	10031810	HS405_00312B-09	3.0	U						5
Acetone	10031810	HS405_00312B-09	35.0	U						6
Carbon disulfide	10031810	HS405_00312B-09	3.4	U						7
Methylene chloride	10031810	HS405_00312B-09	3.7	U						8
trans-1,2-Dichloroethylene	10031810	HS405_00312B-09	3.8	U						9

Analyte	Container	Sample no	Concentration (ppm)	U	D	Z	J	E	B	Analyte Order
1,1-Dichloroethane	10031810	HS405_00312B-09	18.0							10
cis-1,2-Dichloroethylene	10031810	HS405_00312B-09	3.4	U						11
Methyl ethyl ketone	10031810	HS405_00312B-09	40.0	U						12
Chloroform	10031810	HS405_00312B-09	2.8	U						13
1,1,1-Trichloroethane	10031810	HS405_00312B-09	91.0							14
Cyclohexane	10031810	HS405_00312B-09	22.0							15
Carbon tetrachloride	10031810	HS405_00312B-09	2.5	U						16
Benzene	10031810	HS405_00312B-09	5.7				J			17
1,2-Dichloroethane	10031810	HS405_00312B-09	2.5	U						18
Trichloroethylene	10031810	HS405_00312B-09	2.8	U						19
Butanol	10031810	HS405_00312B-09	40.0	U						20
Methyl isobutyl ketone	10031810	HS405_00312B-09	38.0	U						21
Toluene	10031810	HS405_00312B-09	4.2				J			22
Tetrachloroethylene	10031810	HS405_00312B-09	2.8	U						23
Chlorobenzene	10031810	HS405_00312B-09	3.3	U						24
Ethyl benzene	10031810	HS405_00312B-09	3.3	U						25
m&p-Xylene	10031810	HS405_00312B-09	3.1	U						26
o-Xylene	10031810	HS405_00312B-09	3.7	U						27
Bromoform	10031810	HS405_00312B-09	3.0	U						28
1,1,2,2-Tetrachloroethane	10031810	HS405_00312B-09	3.5	U						29
1,3,5-Trimethylbenzene	10031810	HS405_00312B-09	3.2	U						30
1,2,4-Trimethylbenzene	10031810	HS405_00312B-09	3.1	U						31
Chloromethane	10031944	HS205_00282B-16	3.2	U						1
Methanol	10031944	HS205_00282B-16	47.0	U						2
Ethyl ether	10031944	HS205_00282B-16	3.4	U						3
1,1-Dichloroethylene	10031944	HS205_00282B-16	2.5	U						4
1,1,2-Trichloro-1,2,2-trifluoroethane	10031944	HS205_00282B-16	3.3	U						5
Acetone	10031944	HS205_00282B-16	24.0				J			6
Carbon disulfide	10031944	HS205_00282B-16	2.5	U						7
Methylene chloride	10031944	HS205_00282B-16	1.5	U						8
trans-1,2-Dichloroethylene	10031944	HS205_00282B-16	1.5				J			9
1,1-Dichloroethane	10031944	HS205_00282B-16	41.0							10
cis-1,2-Dichloroethylene	10031944	HS205_00282B-16	1.4	U						11
Methyl ethyl ketone	10031944	HS205_00282B-16	13.0	U						12
Chloroform	10031944	HS205_00282B-16	1.6	U						13
1,1,1-Trichloroethane	10031944	HS205_00282B-16	60.0							14
Cyclohexane	10031944	HS205_00282B-16	2.6				J			15
Carbon tetrachloride	10031944	HS205_00282B-16	2.6	U						16
Benzene	10031944	HS205_00282B-16	4.8				J			17
1,2-Dichloroethane	10031944	HS205_00282B-16	2.1	U						18
Trichloroethylene	10031944	HS205_00282B-16	10.0							19
Butanol	10031944	HS205_00282B-16	16.0	U						20
Methyl isobutyl ketone	10031944	HS205_00282B-16	10.0	U						21
Toluene	10031944	HS205_00282B-16	1.7				J			22
Tetrachloroethylene	10031944	HS205_00282B-16	1.5	U						23
Chlorobenzene	10031944	HS205_00282B-16	1.2	U						24
Ethyl benzene	10031944	HS205_00282B-16	1.0	U						25
m&p-Xylene	10031944	HS205_00282B-16	1.1	U						26
o-Xylene	10031944	HS205_00282B-16	1.5	U						27
Bromoform	10031944	HS205_00282B-16	1.2	U						28
1,1,2,2-Tetrachloroethane	10031944	HS205_00282B-16	1.0	U						29
1,3,5-Trimethylbenzene	10031944	HS205_00282B-16	0.9	U						30
1,2,4-Trimethylbenzene	10031944	HS205_00282B-16	0.6	U						31
Chloromethane	10031990	HS405_00311B-04	2.3	U						1
Methanol	10031990	HS405_00311B-04	60.0				J			2
Ethyl ether	10031990	HS405_00311B-04	11.0							3
1,1-Dichloroethylene	10031990	HS405_00311B-04	3.0	U						4
1,1,2-Trichloro-1,2,2-trifluoroethane	10031990	HS405_00311B-04	3.0	U						5
Acetone	10031990	HS405_00311B-04	35.0	U						6
Carbon disulfide	10031990	HS405_00311B-04	3.4	U						7
Methylene chloride	10031990	HS405_00311B-04	3.7	U						8
trans-1,2-Dichloroethylene	10031990	HS405_00311B-04	3.8	U						9
1,1-Dichloroethane	10031990	HS405_00311B-04	89.0							10
cis-1,2-Dichloroethylene	10031990	HS405_00311B-04	3.4	U						11
Methyl ethyl ketone	10031990	HS405_00311B-04	40.0	U						12
Chloroform	10031990	HS405_00311B-04	2.8	U						13
1,1,1-Trichloroethane	10031990	HS405_00311B-04	48.0							14
Cyclohexane	10031990	HS405_00311B-04	330.0		D					15
Carbon tetrachloride	10031990	HS405_00311B-04	2.5	U						16
Benzene	10031990	HS405_00311B-04	3.9	U						17
1,2-Dichloroethane	10031990	HS405_00311B-04	2.5	U						18
Trichloroethylene	10031990	HS405_00311B-04	2.8	U						19
Butanol	10031990	HS405_00311B-04	40.0	U						20
Methyl isobutyl ketone	10031990	HS405_00311B-04	38.0	U						21
Toluene	10031990	HS405_00311B-04	3.7	U						22
Tetrachloroethylene	10031990	HS405_00311B-04	2.8	U						23

Analyte	Container	Sample no	Concentration (ppm)	U	D	Z	J	E	B	Analyte Order
Chlorobenzene	10031990	HS405_00311B-04	3.3	U						24
Ethyl benzene	10031990	HS405_00311B-04	3.3	U						25
m&p-Xylene	10031990	HS405_00311B-04	3.1	U						26
o-Xylene	10031990	HS405_00311B-04	3.7	U						27
Bromoform	10031990	HS405_00311B-04	3.0	U						28
1,1,2,2-Tetrachloroethane	10031990	HS405_00311B-04	3.5	U						29
1,3,5-Trimethylbenzene	10031990	HS405_00311B-04	3.2	U						30
1,2,4-Trimethylbenzene	10031990	HS405_00311B-04	3.1	U						31
Chloromethane	10032020	HS405_00311B-17	2.3	U						1
Methanol	10032020	HS405_00311B-17	42.0	U						2
Ethyl ether	10032020	HS405_00311B-17	3.4	U						3
1,1-Dichloroethylene	10032020	HS405_00311B-17	35.0							4
1,1,2-Trichloro-1,2,2-trifluoroethane	10032020	HS405_00311B-17	3.0	U						5
Acetone	10032020	HS405_00311B-17	35.0	U						6
Carbon disulfide	10032020	HS405_00311B-17	3.4	U						7
Methylene chloride	10032020	HS405_00311B-17	3.7	U						8
trans-1,2-Dichloroethylene	10032020	HS405_00311B-17	3.8	U						9
1,1-Dichloroethane	10032020	HS405_00311B-17	180.0		D					10
cis-1,2-Dichloroethylene	10032020	HS405_00311B-17	3.4	U						11
Methyl ethyl ketone	10032020	HS405_00311B-17	40.0	U						12
Chloroform	10032020	HS405_00311B-17	2.8	U						13
1,1,1-Trichloroethane	10032020	HS405_00311B-17	250.0		D					14
Cyclohexane	10032020	HS405_00311B-17	3.3	U						15
Carbon tetrachloride	10032020	HS405_00311B-17	2.5	U						16
Benzene	10032020	HS405_00311B-17	3.9	U						17
1,2-Dichloroethane	10032020	HS405_00311B-17	2.5	U						18
Trichloroethylene	10032020	HS405_00311B-17	27.0							19
Butanol	10032020	HS405_00311B-17	40.0	U						20
Methyl isobutyl ketone	10032020	HS405_00311B-17	38.0	U						21
Toluene	10032020	HS405_00311B-17	140.0							22
Tetrachloroethylene	10032020	HS405_00311B-17	2.8	U						23
Chlorobenzene	10032020	HS405_00311B-17	3.3	U						24
Ethyl benzene	10032020	HS405_00311B-17	1200.0		D					25
m&p-Xylene	10032020	HS405_00311B-17	3400.0		D					26
o-Xylene	10032020	HS405_00311B-17	420.0		D					27
Bromoform	10032020	HS405_00311B-17	3.0	U						28
1,1,2,2-Tetrachloroethane	10032020	HS405_00311B-17	3.5	U						29
1,3,5-Trimethylbenzene	10032020	HS405_00311B-17	3.2	U						30
1,2,4-Trimethylbenzene	10032020	HS405_00311B-17	3.1	U						31
Chloromethane	10032024	HS505_00071B-01	5.2	U						1
Methanol	10032024	HS505_00071B-01	810.0							2
Ethyl ether	10032024	HS505_00071B-01	4.6	U						3
1,1-Dichloroethylene	10032024	HS505_00071B-01	4.9	U						4
1,1,2-Trichloro-1,2,2-trifluoroethane	10032024	HS505_00071B-01	4.7	U						5
Acetone	10032024	HS505_00071B-01	51.0	U						6
Carbon disulfide	10032024	HS505_00071B-01	5.0	U						7
Methylene chloride	10032024	HS505_00071B-01	4.6	U						8
trans-1,2-Dichloroethylene	10032024	HS505_00071B-01	4.5	U						9
1,1-Dichloroethane	10032024	HS505_00071B-01	4.7	U						10
cis-1,2-Dichloroethylene	10032024	HS505_00071B-01	4.5	U						11
Methyl ethyl ketone	10032024	HS505_00071B-01	49.0	U						12
Chloroform	10032024	HS505_00071B-01	4.6	U						13
1,1,1-Trichloroethane	10032024	HS505_00071B-01	17.0							14
Cyclohexane	10032024	HS505_00071B-01	4.4	U						15
Carbon tetrachloride	10032024	HS505_00071B-01	4.9	U						16
Benzene	10032024	HS505_00071B-01	4.5	U						17
1,2-Dichloroethane	10032024	HS505_00071B-01	4.7	U						18
Trichloroethylene	10032024	HS505_00071B-01	4.6	U						19
Butanol	10032024	HS505_00071B-01	55.0	U						20
Methyl isobutyl ketone	10032024	HS505_00071B-01	39.0	U						21
Toluene	10032024	HS505_00071B-01	4.1	U						22
Tetrachloroethylene	10032024	HS505_00071B-01	3.7	U						23
Chlorobenzene	10032024	HS505_00071B-01	4.2	U						24
Ethyl benzene	10032024	HS505_00071B-01	4.3	U						25
m&p-Xylene	10032024	HS505_00071B-01	3.8	U						26
o-Xylene	10032024	HS505_00071B-01	4.4	U						27
Bromoform	10032024	HS505_00071B-01	4.0	U						28
1,1,2,2-Tetrachloroethane	10032024	HS505_00071B-01	4.7	U						29
1,3,5-Trimethylbenzene	10032024	HS505_00071B-01	4.6	U						30
1,2,4-Trimethylbenzene	10032024	HS505_00071B-01	4.7	U						31
Chloromethane	10032181	HS505_00069B-12	5.2	U						1
Methanol	10032181	HS505_00069B-12	72.0	U						2
Ethyl ether	10032181	HS505_00069B-12	4.6	U						3
1,1-Dichloroethylene	10032181	HS505_00069B-12	4.9	U						4
1,1,2-Trichloro-1,2,2-trifluoroethane	10032181	HS505_00069B-12	4.7	U						5
Acetone	10032181	HS505_00069B-12	51.0	U						6

Analyte	Container	Sample no	Concentration (ppm)	U	D	Z	J	E	B	Analyte Order
Carbon disulfide	10032181	HS505_00069B-12	5.0	U						7
Methylene chloride	10032181	HS505_00069B-12	4.6	U						8
trans-1,2-Dichloroethylene	10032181	HS505_00069B-12	4.5	U						9
1,1-Dichloroethane	10032181	HS505_00069B-12	4.7	U						10
cis-1,2-Dichloroethylene	10032181	HS505_00069B-12	4.5	U						11
Methyl ethyl ketone	10032181	HS505_00069B-12	49.0	U						12
Chloroform	10032181	HS505_00069B-12	4.6	U						13
1,1,1-Trichloroethane	10032181	HS505_00069B-12	4.6	U						14
Cyclohexane	10032181	HS505_00069B-12	4.4	U						15
Carbon tetrachloride	10032181	HS505_00069B-12	4.9	U						16
Benzene	10032181	HS505_00069B-12	4.5	U						17
1,2-Dichloroethane	10032181	HS505_00069B-12	4.7	U						18
Trichloroethylene	10032181	HS505_00069B-12	4.6	U						19
Butanol	10032181	HS505_00069B-12	55.0	U						20
Methyl isobutyl ketone	10032181	HS505_00069B-12	39.0	U						21
Toluene	10032181	HS505_00069B-12	4.1	U						22
Tetrachloroethylene	10032181	HS505_00069B-12	3.7	U						23
Chlorobenzene	10032181	HS505_00069B-12	4.2	U						24
Ethyl benzene	10032181	HS505_00069B-12	4.3	U						25
m&p-Xylene	10032181	HS505_00069B-12	3.8	U						26
o-Xylene	10032181	HS505_00069B-12	4.4	U						27
Bromoform	10032181	HS505_00069B-12	4.0	U						28
1,1,2,2-Tetrachloroethane	10032181	HS505_00069B-12	4.7	U						29
1,3,5-Trimethylbenzene	10032181	HS505_00069B-12	4.6	U						30
1,2,4-Trimethylbenzene	10032181	HS505_00069B-12	4.7	U						31
Chloromethane	10032196	HS505_00079B-05	5.2	U						1
Methanol	10032196	HS505_00079B-05	72.0	U						2
Ethyl ether	10032196	HS505_00079B-05	4.6	U						3
1,1-Dichloroethylene	10032196	HS505_00079B-05	4.9	U						4
1,1,2-Trichloro-1,2,2-trifluoroethane	10032196	HS505_00079B-05	4.7	U						5
Acetone	10032196	HS505_00079B-05	51.0	U						6
Carbon disulfide	10032196	HS505_00079B-05	5.0	U						7
Methylene chloride	10032196	HS505_00079B-05	4.6	U						8
trans-1,2-Dichloroethylene	10032196	HS505_00079B-05	4.5	U						9
1,1-Dichloroethane	10032196	HS505_00079B-05	120.0							10
cis-1,2-Dichloroethylene	10032196	HS505_00079B-05	4.5	U						11
Methyl ethyl ketone	10032196	HS505_00079B-05	49.0	U						12
Chloroform	10032196	HS505_00079B-05	4.6	U						13
1,1,1-Trichloroethane	10032196	HS505_00079B-05	11.0							14
Cyclohexane	10032196	HS505_00079B-05	4.4	U						15
Carbon tetrachloride	10032196	HS505_00079B-05	4.9	U						16
Benzene	10032196	HS505_00079B-05	4.5	U						17
1,2-Dichloroethane	10032196	HS505_00079B-05	4.7	U						18
Trichloroethylene	10032196	HS505_00079B-05	21.0							19
Butanol	10032196	HS505_00079B-05	55.0	U						20
Methyl isobutyl ketone	10032196	HS505_00079B-05	39.0	U						21
Toluene	10032196	HS505_00079B-05	4.1	U						22
Tetrachloroethylene	10032196	HS505_00079B-05	3.7	U						23
Chlorobenzene	10032196	HS505_00079B-05	4.2	U						24
Ethyl benzene	10032196	HS505_00079B-05	4.3	U						25
m&p-Xylene	10032196	HS505_00079B-05	3.8	U						26
o-Xylene	10032196	HS505_00079B-05	4.4	U						27
Bromoform	10032196	HS505_00079B-05	4.0	U						28
1,1,2,2-Tetrachloroethane	10032196	HS505_00079B-05	4.7	U						29
1,3,5-Trimethylbenzene	10032196	HS505_00079B-05	4.6	U						30
1,2,4-Trimethylbenzene	10032196	HS505_00079B-05	4.7	U						31
Chloromethane	10032261	HS405_00312B-06	2.3	U						1
Methanol	10032261	HS405_00312B-06	42.0	U						2
Ethyl ether	10032261	HS405_00312B-06	3.4	U						3
1,1-Dichloroethylene	10032261	HS405_00312B-06	3.0	U						4
1,1,2-Trichloro-1,2,2-trifluoroethane	10032261	HS405_00312B-06	3.0	U						5
Acetone	10032261	HS405_00312B-06	35.0	U						6
Carbon disulfide	10032261	HS405_00312B-06	3.4	U						7
Methylene chloride	10032261	HS405_00312B-06	3.7	U						8
trans-1,2-Dichloroethylene	10032261	HS405_00312B-06	3.8	U						9
1,1-Dichloroethane	10032261	HS405_00312B-06	3.3	U						10
cis-1,2-Dichloroethylene	10032261	HS405_00312B-06	3.4	U						11
Methyl ethyl ketone	10032261	HS405_00312B-06	40.0	U						12
Chloroform	10032261	HS405_00312B-06	2.8	U						13
1,1,1-Trichloroethane	10032261	HS405_00312B-06	88.0							14
Cyclohexane	10032261	HS405_00312B-06	53.0							15
Carbon tetrachloride	10032261	HS405_00312B-06	2.5	U						16
Benzene	10032261	HS405_00312B-06	8.6				J			17
1,2-Dichloroethane	10032261	HS405_00312B-06	2.5	U						18
Trichloroethylene	10032261	HS405_00312B-06	2.8	U						19
Butanol	10032261	HS405_00312B-06	40.0	U						20

Analyte	Container	Sample no	Concentration (ppm)	U	D	Z	J	E	B	Analyte Order
Methyl isobutyl ketone	10032261	HS405_00312B-06	38.0	U						21
Toluene	10032261	HS405_00312B-06	3.7	U						22
Tetrachloroethylene	10032261	HS405_00312B-06	2.8	U						23
Chlorobenzene	10032261	HS405_00312B-06	3.3	U						24
Ethyl benzene	10032261	HS405_00312B-06	3.3	U						25
m&p-Xylene	10032261	HS405_00312B-06	7.0				J			26
o-Xylene	10032261	HS405_00312B-06	3.7	U						27
Bromoform	10032261	HS405_00312B-06	3.0	U						28
1,1,2,2-Tetrachloroethane	10032261	HS405_00312B-06	3.5	U						29
1,3,5-Trimethylbenzene	10032261	HS405_00312B-06	3.2	U						30
1,2,4-Trimethylbenzene	10032261	HS405_00312B-06	3.1	U						31
Chloromethane	10036723	HS505_00096B-10	5.2	U						1
Methanol	10036723	HS505_00096B-10	330.0							2
Ethyl ether	10036723	HS505_00096B-10	4.6	U						3
1,1-Dichloroethylene	10036723	HS505_00096B-10	4.9	U						4
1,1,2-Trichloro-1,2,2-trifluoroethane	10036723	HS505_00096B-10	4.7	U						5
Acetone	10036723	HS505_00096B-10	51.0	U						6
Carbon disulfide	10036723	HS505_00096B-10	5.0	U						7
Methylene chloride	10036723	HS505_00096B-10	4.6	U						8
trans-1,2-Dichloroethylene	10036723	HS505_00096B-10	4.5	U						9
1,1-Dichloroethane	10036723	HS505_00096B-10	160.0							10
cis-1,2-Dichloroethylene	10036723	HS505_00096B-10	4.5	U						11
Methyl ethyl ketone	10036723	HS505_00096B-10	49.0	U						12
Chloroform	10036723	HS505_00096B-10	4.6	U						13
1,1,1-Trichloroethane	10036723	HS505_00096B-10	4.6	U						14
Cyclohexane	10036723	HS505_00096B-10	4.4	U						15
Carbon tetrachloride	10036723	HS505_00096B-10	4.9	U						16
Benzene	10036723	HS505_00096B-10	12.0							17
1,2-Dichloroethane	10036723	HS505_00096B-10	4.7	U						18
Trichloroethylene	10036723	HS505_00096B-10	4.6	U						19
Butanol	10036723	HS505_00096B-10	55.0	U						20
Methyl isobutyl ketone	10036723	HS505_00096B-10	39.0	U						21
Toluene	10036723	HS505_00096B-10	4.1	U						22
Tetrachloroethylene	10036723	HS505_00096B-10	3.7	U						23
Chlorobenzene	10036723	HS505_00096B-10	4.2	U						24
Ethyl benzene	10036723	HS505_00096B-10	4.3	U						25
m&p-Xylene	10036723	HS505_00096B-10	3.8	U						26
o-Xylene	10036723	HS505_00096B-10	4.4	U						27
Bromoform	10036723	HS505_00096B-10	4.0	U						28
1,1,2,2-Tetrachloroethane	10036723	HS505_00096B-10	4.7	U						29
1,3,5-Trimethylbenzene	10036723	HS505_00096B-10	4.6	U						30
1,2,4-Trimethylbenzene	10036723	HS505_00096B-10	4.7	U						31
Chloromethane	10036775	HS505_00090B-15	5.2	U						1
Methanol	10036775	HS505_00090B-15	72.0	U						2
Ethyl ether	10036775	HS505_00090B-15	4.6	U						3
1,1-Dichloroethylene	10036775	HS505_00090B-15	4.9	U						4
1,1,2-Trichloro-1,2,2-trifluoroethane	10036775	HS505_00090B-15	4.7	U						5
Acetone	10036775	HS505_00090B-15	51.0	U						6
Carbon disulfide	10036775	HS505_00090B-15	5.0	U						7
Methylene chloride	10036775	HS505_00090B-15	4.6	U						8
trans-1,2-Dichloroethylene	10036775	HS505_00090B-15	4.5	U						9
1,1-Dichloroethane	10036775	HS505_00090B-15	220.0		D					10
cis-1,2-Dichloroethylene	10036775	HS505_00090B-15	5.3				J			11
Methyl ethyl ketone	10036775	HS505_00090B-15	49.0	U						12
Chloroform	10036775	HS505_00090B-15	4.6	U						13
1,1,1-Trichloroethane	10036775	HS505_00090B-15	4.6	U						14
Cyclohexane	10036775	HS505_00090B-15	4.4	U						15
Carbon tetrachloride	10036775	HS505_00090B-15	4.9	U						16
Benzene	10036775	HS505_00090B-15	4.5	U						17
1,2-Dichloroethane	10036775	HS505_00090B-15	4.7	U						18
Trichloroethylene	10036775	HS505_00090B-15	6.7				J			19
Butanol	10036775	HS505_00090B-15	55.0	U						20
Methyl isobutyl ketone	10036775	HS505_00090B-15	39.0	U						21
Toluene	10036775	HS505_00090B-15	4.1	U						22
Tetrachloroethylene	10036775	HS505_00090B-15	3.7	U						23
Chlorobenzene	10036775	HS505_00090B-15	4.2	U						24
Ethyl benzene	10036775	HS505_00090B-15	4.3	U						25
m&p-Xylene	10036775	HS505_00090B-15	3.8	U						26
o-Xylene	10036775	HS505_00090B-15	4.4	U						27
Bromoform	10036775	HS505_00090B-15	4.0	U						28
1,1,2,2-Tetrachloroethane	10036775	HS505_00090B-15	4.7	U						29
1,3,5-Trimethylbenzene	10036775	HS505_00090B-15	4.6	U						30
1,2,4-Trimethylbenzene	10036775	HS505_00090B-15	4.7	U						31
Chloromethane	10037070	HS505_00071B-12	5.2	U						1
Methanol	10037070	HS505_00071B-12	570.0							2
Ethyl ether	10037070	HS505_00071B-12	4.6	U						3

Analyte	Container	Sample no	Concentration (ppm)	U	D	Z	J	E	B	Analyte Order
1,1-Dichloroethylene	10037070	HS505_00071B-12	4.9	U						4
1,1,2-Trichloro-1,2,2-trifluoroethane	10037070	HS505_00071B-12	4.7	U						5
Acetone	10037070	HS505_00071B-12	51.0	U						6
Carbon disulfide	10037070	HS505_00071B-12	5.0	U						7
Methylene chloride	10037070	HS505_00071B-12	4.6	U						8
trans-1,2-Dichloroethylene	10037070	HS505_00071B-12	4.5	U						9
1,1-Dichloroethane	10037070	HS505_00071B-12	59.0							10
cis-1,2-Dichloroethylene	10037070	HS505_00071B-12	4.5	U						11
Methyl ethyl ketone	10037070	HS505_00071B-12	49.0	U						12
Chloroform	10037070	HS505_00071B-12	4.6	U						13
1,1,1-Trichloroethane	10037070	HS505_00071B-12	4.6	U						14
Cyclohexane	10037070	HS505_00071B-12	4.4	U						15
Carbon tetrachloride	10037070	HS505_00071B-12	4.9	U						16
Benzene	10037070	HS505_00071B-12	4.5	U						17
1,2-Dichloroethane	10037070	HS505_00071B-12	4.7	U						18
Trichloroethylene	10037070	HS505_00071B-12	4.6	U						19
Butanol	10037070	HS505_00071B-12	55.0	U						20
Methyl isobutyl ketone	10037070	HS505_00071B-12	39.0	U						21
Toluene	10037070	HS505_00071B-12	10.0							22
Tetrachloroethylene	10037070	HS505_00071B-12	3.7	U						23
Chlorobenzene	10037070	HS505_00071B-12	4.2	U						24
Ethyl benzene	10037070	HS505_00071B-12	4.3	U						25
m&p-Xylene	10037070	HS505_00071B-12	3.8	U						26
o-Xylene	10037070	HS505_00071B-12	4.4	U						27
Bromoform	10037070	HS505_00071B-12	4.0	U						28
1,1,2,2-Tetrachloroethane	10037070	HS505_00071B-12	4.7	U						29
1,3,5-Trimethylbenzene	10037070	HS505_00071B-12	4.6	U						30
1,2,4-Trimethylbenzene	10037070	HS505_00071B-12	4.7	U						31
Chloromethane	10037340	HS505_00071B-19	5.2	U						1
Methanol	10037340	HS505_00071B-19	72.0	U						2
Ethyl ether	10037340	HS505_00071B-19	4.6	U						3
1,1-Dichloroethylene	10037340	HS505_00071B-19	4.9	U						4
1,1,2-Trichloro-1,2,2-trifluoroethane	10037340	HS505_00071B-19	4.7	U						5
Acetone	10037340	HS505_00071B-19	51.0	U						6
Carbon disulfide	10037340	HS505_00071B-19	5.0	U						7
Methylene chloride	10037340	HS505_00071B-19	4.6	U						8
trans-1,2-Dichloroethylene	10037340	HS505_00071B-19	4.5	U						9
1,1-Dichloroethane	10037340	HS505_00071B-19	4.7	U						10
cis-1,2-Dichloroethylene	10037340	HS505_00071B-19	4.5	U						11
Methyl ethyl ketone	10037340	HS505_00071B-19	49.0	U						12
Chloroform	10037340	HS505_00071B-19	4.6	U						13
1,1,1-Trichloroethane	10037340	HS505_00071B-19	4.6	U						14
Cyclohexane	10037340	HS505_00071B-19	4.4	U						15
Carbon tetrachloride	10037340	HS505_00071B-19	4.9	U						16
Benzene	10037340	HS505_00071B-19	4.5	U						17
1,2-Dichloroethane	10037340	HS505_00071B-19	4.7	U						18
Trichloroethylene	10037340	HS505_00071B-19	4.6	U						19
Butanol	10037340	HS505_00071B-19	55.0	U						20
Methyl isobutyl ketone	10037340	HS505_00071B-19	39.0	U						21
Toluene	10037340	HS505_00071B-19	4.1	U						22
Tetrachloroethylene	10037340	HS505_00071B-19	3.7	U						23
Chlorobenzene	10037340	HS505_00071B-19	4.2	U						24
Ethyl benzene	10037340	HS505_00071B-19	4.3	U						25
m&p-Xylene	10037340	HS505_00071B-19	3.8	U						26
o-Xylene	10037340	HS505_00071B-19	4.4	U						27
Bromoform	10037340	HS505_00071B-19	4.0	U						28
1,1,2,2-Tetrachloroethane	10037340	HS505_00071B-19	4.7	U						29
1,3,5-Trimethylbenzene	10037340	HS505_00071B-19	4.6	U						30
1,2,4-Trimethylbenzene	10037340	HS505_00071B-19	4.7	U						31
Chloromethane	10038785	HS405_00311B-16	2.3	U						1
Methanol	10038785	HS405_00311B-16	42.0	U						2
Ethyl ether	10038785	HS405_00311B-16	3.4	U						3
1,1-Dichloroethylene	10038785	HS405_00311B-16	89.0							4
1,1,2-Trichloro-1,2,2-trifluoroethane	10038785	HS405_00311B-16	3.0	U						5
Acetone	10038785	HS405_00311B-16	35.0	U						6
Carbon disulfide	10038785	HS405_00311B-16	3.4	U						7
Methylene chloride	10038785	HS405_00311B-16	3.7	U						8
trans-1,2-Dichloroethylene	10038785	HS405_00311B-16	3.8	U						9
1,1-Dichloroethane	10038785	HS405_00311B-16	42.0							10
cis-1,2-Dichloroethylene	10038785	HS405_00311B-16	3.4	U						11
Methyl ethyl ketone	10038785	HS405_00311B-16	40.0	U						12
Chloroform	10038785	HS405_00311B-16	2.8	U						13
1,1,1-Trichloroethane	10038785	HS405_00311B-16	990.0		D					14
Cyclohexane	10038785	HS405_00311B-16	3.3	U						15
Carbon tetrachloride	10038785	HS405_00311B-16	2.5	U						16
Benzene	10038785	HS405_00311B-16	3.9	U						17

Analyte	Container	Sample no	Concentration (ppm)	U	D	Z	J	E	B	Analyte Order
1,2-Dichloroethane	10038785	HS405_00311B-16	2 5	U						18
Trichloroethylene	10038785	HS405_00311B-16	100 0							19
Butanol	10038785	HS405_00311B-16	40 0	U						20
Methyl isobutyl ketone	10038785	HS405_00311B-16	38 0	U						21
Toluene	10038785	HS405_00311B-16	7 6				J			22
Tetrachloroethylene	10038785	HS405_00311B-16	2 8	U						23
Chlorobenzene	10038785	HS405_00311B-16	3 3	U						24
Ethyl benzene	10038785	HS405_00311B-16	3 3	U						25
m&p-Xylene	10038785	HS405_00311B-16	3 1	U						26
o-Xylene	10038785	HS405_00311B-16	3 7	U						27
Bromoform	10038785	HS405_00311B-16	3 0	U						28
1,1,2,2-Tetrachloroethane	10038785	HS405_00311B-16	3 5	U						29
1,3,5-Trimethylbenzene	10038785	HS405_00311B-16	3 2	U						30
1,2,4-Trimethylbenzene	10038785	HS405_00311B-16	3 1	U						31
Chloromethane	10039124	HS205_00282B-04	3 2	U						1
Methanol	10039124	HS205_00282B-04	47 0	U						2
Ethyl ether	10039124	HS205_00282B-04	4 8				J			3
1,1-Dichloroethylene	10039124	HS205_00282B-04	8 5				J			4
1,1,2-Trichloro-1,2,2-trifluoroethane	10039124	HS205_00282B-04	3 3	U						5
Acetone	10039124	HS205_00282B-04	13 0	U						6
Carbon disulfide	10039124	HS205_00282B-04	2 5	U						7
Methylene chloride	10039124	HS205_00282B-04	200 0		D					8
trans-1,2-Dichloroethylene	10039124	HS205_00282B-04	1 2	U						9
1,1-Dichloroethane	10039124	HS205_00282B-04	64 0							10
cis-1,2-Dichloroethylene	10039124	HS205_00282B-04	1 4	U						11
Methyl ethyl ketone	10039124	HS205_00282B-04	13 0	U						12
Chloroform	10039124	HS205_00282B-04	170 0							13
1,1,1-Trichloroethane	10039124	HS205_00282B-04	11 0							14
Cyclohexane	10039124	HS205_00282B-04	1 3	U						15
Carbon tetrachloride	10039124	HS205_00282B-04	2 6	U						16
Benzene	10039124	HS205_00282B-04	6 3				J			17
1,2-Dichloroethane	10039124	HS205_00282B-04	2 1	U						18
Trichloroethylene	10039124	HS205_00282B-04	6 3				J			19
Butanol	10039124	HS205_00282B-04	140 0							20
Methyl isobutyl ketone	10039124	HS205_00282B-04	10 0	U						21
Toluene	10039124	HS205_00282B-04	52 0							22
Tetrachloroethylene	10039124	HS205_00282B-04	3 9				J			23
Chlorobenzene	10039124	HS205_00282B-04	1 2	U						24
Ethyl benzene	10039124	HS205_00282B-04	1400 0		D					25
m&p-Xylene	10039124	HS205_00282B-04	3400 0		D					26
o-Xylene	10039124	HS205_00282B-04	630 0		D					27
Bromoform	10039124	HS205_00282B-04	1 2	U						28
1,1,2,2-Tetrachloroethane	10039124	HS205_00282B-04	1 0	U						29
1,3,5-Trimethylbenzene	10039124	HS205_00282B-04	0 9	U						30
1,2,4-Trimethylbenzene	10039124	HS205_00282B-04	0 6	U						31
Chloromethane	10048268	HS505_00069B-05	5 2	U						1
Methanol	10048268	HS505_00069B-05	72 0	U						2
Ethyl ether	10048268	HS505_00069B-05	4 6	U						3
1,1-Dichloroethylene	10048268	HS505_00069B-05	4 9	U						4
1,1,2-Trichloro-1,2,2-trifluoroethane	10048268	HS505_00069B-05	4 7	U						5
Acetone	10048268	HS505_00069B-05	51 0	U						6
Carbon disulfide	10048268	HS505_00069B-05	5 0	U						7
Methylene chloride	10048268	HS505_00069B-05	4 6	U						8
trans-1,2 Dichloroethylene	10048268	HS505_00069B 05	4 5	U						9
1,1-Dichloroethane	10048268	HS505_00069B-05	4 7	U						10
cis-1,2-Dichloroethylene	10048268	HS505_00069B-05	4 5	U						11
Methyl ethyl ketone	10048268	HS505_00069B-05	49 0	U						12
Chloroform	10048268	HS505_00069B-05	4 6	U						13
1,1,1-Trichloroethane	10048268	HS505_00069B-05	4 6	U						14
Cyclohexane	10048268	HS505_00069B-05	15 0							15
Carbon tetrachloride	10048268	HS505_00069B-05	4 9	U						16
Benzene	10048268	HS505_00069B-05	4 5	U						17
1,2-Dichloroethane	10048268	HS505_00069B-05	4 7	U						18
Trichloroethylene	10048268	HS505_00069B-05	4 6	U						19
Butanol	10048268	HS505_00069B-05	55 0	U						20
Methyl isobutyl ketone	10048268	HS505_00069B-05	39 0	U						21
Toluene	10048268	HS505_00069B-05	4 1	U						22
Tetrachloroethylene	10048268	HS505_00069B-05	3 7	U						23
Chlorobenzene	10048268	HS505_00069B-05	4 2	U						24
Ethyl benzene	10048268	HS505_00069B-05	4 3	U						25
m&p-Xylene	10048268	HS505_00069B-05	3 8	U						26
o-Xylene	10048268	HS505_00069B-05	4 4	U						27
Bromoform	10048268	HS505_00069B 05	4 0	U						28
1,1,2,2-Tetrachloroethane	10048268	HS505_00069B 05	4 7	U						29
1,3,5-Trimethylbenzene	10048268	HS505_00069B-05	4 6	U						30
1 2,4-Trimethylbenzene	10048268	HS505_00069B-05	4 7	U						31

Analyte	Container	Sample no	Concentration (ppm)	U	D	Z	J	E	B	Analyte Order
Chloromethane	10048269	HS205_00303B-21	3.2	U						1
Methanol	10048269	HS205_00303B-21	47.0	U						2
Ethyl ether	10048269	HS205_00303B-21	3.4	U						3
1,1-Dichloroethylene	10048269	HS205_00303B-21	2.5	U						4
1,1,2-Trichloro-1,2,2-trifluoroethane	10048269	HS205_00303B-21	3.3	U						5
Acetone	10048269	HS205_00303B-21	13.0	U						6
Carbon disulfide	10048269	HS205_00303B-21	2.5	U						7
Methylene chloride	10048269	HS205_00303B-21	1.5	U						8
trans-1,2-Dichloroethylene	10048269	HS205_00303B-21	1.2	U						9
1,1-Dichloroethane	10048269	HS205_00303B-21	1.6	U						10
cis-1,2-Dichloroethylene	10048269	HS205_00303B-21	1.4	U						11
Methyl ethyl ketone	10048269	HS205_00303B-21	13.0	U						12
Chloroform	10048269	HS205_00303B-21	1.6	U						13
1,1,1-Trichloroethane	10048269	HS205_00303B-21	2.2	U						14
Cyclohexane	10048269	HS205_00303B-21	1.3	U						15
Carbon tetrachloride	10048269	HS205_00303B-21	2.6	U						16
Benzene	10048269	HS205_00303B-21	1.4	U						17
1,2-Dichloroethane	10048269	HS205_00303B-21	2.1	U						18
Trichloroethylene	10048269	HS205_00303B-21	1.4	U						19
Butanol	10048269	HS205_00303B-21	16.0	U						20
Methyl isobutyl ketone	10048269	HS205_00303B-21	10.0	U						21
Toluene	10048269	HS205_00303B-21	3.3				J			22
Tetrachloroethylene	10048269	HS205_00303B-21	1.5	U						23
Chlorobenzene	10048269	HS205_00303B-21	1.2	U						24
Ethyl benzene	10048269	HS205_00303B-21	1.0	U						25
m&p-Xylene	10048269	HS205_00303B-21	1.1	U						26
o-Xylene	10048269	HS205_00303B-21	1.5	U						27
Bromoform	10048269	HS205_00303B-21	1.2	U						28
1,1,2,2-Tetrachloroethane	10048269	HS205_00303B-21	1.0	U						29
1,3,5-Trimethylbenzene	10048269	HS205_00303B-21	0.9	U						30
1,2,4-Trimethylbenzene	10048269	HS205_00303B-21	0.6	U						31
Chloromethane	10048271	HS405_00332B-09	2.3	U						1
Methanol	10048271	HS405_00332B-09	42.0	U						2
Ethyl ether	10048271	HS405_00332B-09	3.4	U						3
1,1-Dichloroethylene	10048271	HS405_00332B-09	3.0	U						4
1,1,2-Trichloro-1,2,2-trifluoroethane	10048271	HS405_00332B-09	3.0	U						5
Acetone	10048271	HS405_00332B-09	35.0	U						6
Carbon disulfide	10048271	HS405_00332B-09	3.4	U						7
Methylene chloride	10048271	HS405_00332B-09	3.7	U						8
trans-1,2-Dichloroethylene	10048271	HS405_00332B-09	3.8	U						9
1,1-Dichloroethane	10048271	HS405_00332B-09	3.3	U						10
cis-1,2-Dichloroethylene	10048271	HS405_00332B-09	3.4	U						11
Methyl ethyl ketone	10048271	HS405_00332B-09	40.0	U						12
Chloroform	10048271	HS405_00332B-09	2.8	U						13
1,1,1-Trichloroethane	10048271	HS405_00332B-09	2.6	U						14
Cyclohexane	10048271	HS405_00332B-09	120.0							15
Carbon tetrachloride	10048271	HS405_00332B-09	2.5	U						16
Benzene	10048271	HS405_00332B-09	3.9	U						17
1,2-Dichloroethane	10048271	HS405_00332B-09	2.5	U						18
Trichloroethylene	10048271	HS405_00332B-09	2.8	U						19
Butanol	10048271	HS405_00332B-09	40.0	U						20
Methyl isobutyl ketone	10048271	HS405_00332B-09	38.0	U						21
Toluene	10048271	HS405_00332B-09	3.7	U						22
Tetrachloroethylene	10048271	HS405_00332B-09	2.8	U						23
Chlorobenzene	10048271	HS405_00332B-09	3.3	U						24
Ethyl benzene	10048271	HS405_00332B-09	3.3	U						25
m&p-Xylene	10048271	HS405_00332B-09	3.1	U						26
o-Xylene	10048271	HS405_00332B-09	3.7	U						27
Bromoform	10048271	HS405_00332B-09	3.0	U						28
1,1,2,2-Tetrachloroethane	10048271	HS405_00332B-09	3.5	U						29
1,3,5-Trimethylbenzene	10048271	HS405_00332B-09	3.2	U						30
1,2,4-Trimethylbenzene	10048271	HS405_00332B-09	3.1	U						31
Chloromethane	10048272	HS205_00303B-15	3.2	U						1
Methanol	10048272	HS205_00303B-15	47.0	U						2
Ethyl ether	10048272	HS205_00303B-15	3.4	U						3
1,1-Dichloroethylene	10048272	HS205_00303B-15	2.5	U						4
1,1,2-Trichloro-1,2,2-trifluoroethane	10048272	HS205_00303B-15	3.3	U						5
Acetone	10048272	HS205_00303B-15	13.0	U						6
Carbon disulfide	10048272	HS205_00303B-15	2.5	U						7
Methylene chloride	10048272	HS205_00303B-15	1.5	U						8
trans-1,2-Dichloroethylene	10048272	HS205_00303B-15	1.2	U						9
1,1-Dichloroethane	10048272	HS205_00303B-15	1.6	U						10
cis-1,2-Dichloroethylene	10048272	HS205_00303B-15	1.4	U						11
Methyl ethyl ketone	10048272	HS205_00303B-15	13.0	U						12
Chloroform	10048272	HS205_00303B-15	1.6	U						13
1,1,1-Trichloroethane	10048272	HS205_00303B-15	6.8				J			14

Analyte	Container	Sample no.	Concentration (ppm)	U	D	Z	J	E	B	Analyte Order
Cyclohexane	10048272	HS205_00303B-15	1.3	U						15
Carbon tetrachloride	10048272	HS205_00303B-15	2.6	U						16
Benzene	10048272	HS205_00303B-15	1.4	U						17
1,2-Dichloroethane	10048272	HS205_00303B-15	2.1	U						18
Trichloroethylene	10048272	HS205_00303B-15	8.2				J			19
Butanol	10048272	HS205_00303B-15	16.0	U						20
Methyl isobutyl ketone	10048272	HS205_00303B-15	10.0	U						21
Toluene	10048272	HS205_00303B-15	1.4				J			22
Tetrachloroethylene	10048272	HS205_00303B-15	1.5	U						23
Chlorobenzene	10048272	HS205_00303B-15	1.2	U						24
Ethyl benzene	10048272	HS205_00303B-15	1.2				J			25
m&p-Xylene	10048272	HS205_00303B-15	3.6				J			26
o-Xylene	10048272	HS205_00303B-15	1.5	U						27
Bromoform	10048272	HS205_00303B-15	1.2	U						28
1,1,2,2-Tetrachloroethane	10048272	HS205_00303B-15	1.0	U						29
1,3,5-Trimethylbenzene	10048272	HS205_00303B-15	0.9	U						30
1,2,4-Trimethylbenzene	10048272	HS205_00303B-15	0.6	U						31
Chloromethane	10048276	HS205_00303B-05	3.2	U						1
Methanol	10048276	HS205_00303B-05	680.0							2
Ethyl ether	10048276	HS205_00303B-05	3.4	U						3
1,1-Dichloroethylene	10048276	HS205_00303B-05	2.5	U						4
1,1,2-Trichloro-1,2,2-trifluoroethane	10048276	HS205_00303B-05	3.3	U						5
Acetone	10048276	HS205_00303B-05	13.0	U						6
Carbon disulfide	10048276	HS205_00303B-05	2.5	U						7
Methylene chloride	10048276	HS205_00303B-05	1.5	U						8
trans-1,2-Dichloroethylene	10048276	HS205_00303B-05	1.2	U						9
1,1-Dichloroethane	10048276	HS205_00303B-05	1.6	U						10
cis-1,2-Dichloroethylene	10048276	HS205_00303B-05	1.4	U						11
Methyl ethyl ketone	10048276	HS205_00303B-05	13.0	U						12
Chloroform	10048276	HS205_00303B-05	1.6	U						13
1,1,1-Trichloroethane	10048276	HS205_00303B-05	2.2	U						14
Cyclohexane	10048276	HS205_00303B-05	1.3	U						15
Carbon tetrachloride	10048276	HS205_00303B-05	2.6	U						16
Benzene	10048276	HS205_00303B-05	1.4	U						17
1,2-Dichloroethane	10048276	HS205_00303B-05	2.1	U						18
Trichloroethylene	10048276	HS205_00303B-05	1.4	U						19
Butanol	10048276	HS205_00303B-05	16.0	U						20
Methyl isobutyl ketone	10048276	HS205_00303B-05	10.0	U						21
Toluene	10048276	HS205_00303B-05	5.0				J			22
Tetrachloroethylene	10048276	HS205_00303B-05	1.5	U						23
Chlorobenzene	10048276	HS205_00303B-05	1.2	U						24
Ethyl benzene	10048276	HS205_00303B-05	1.0	U						25
m&p-Xylene	10048276	HS205_00303B-05	1.1	U						26
o-Xylene	10048276	HS205_00303B-05	1.5	U						27
Bromoform	10048276	HS205_00303B-05	1.2	U						28
1,1,2,2-Tetrachloroethane	10048276	HS205_00303B-05	1.0	U						29
1,3,5-Trimethylbenzene	10048276	HS205_00303B-05	0.9	U						30
1,2,4-Trimethylbenzene	10048276	HS205_00303B-05	0.6	U						31
Chloromethane	10048278	HS405_00341B-13	2.3	U						1
Methanol	10048278	HS405_00341B-13	42.0	U						2
Ethyl ether	10048278	HS405_00341B-13	3.4	U						3
1,1 Dichloroethylene	10048278	HS405_00341B-13	3.0	U						4
1,1,2-Trichloro-1,2,2-trifluoroethane	10048278	HS405_00341B-13	3.0	U						5
Acetone	10048278	HS405_00341B-13	35.0	U						6
Carbon disulfide	10048278	HS405_00341B-13	3.4	U						7
Methylene chloride	10048278	HS405_00341B-13	3.7	U						8
trans-1,2-Dichloroethylene	10048278	HS405_00341B-13	3.8	U						9
1,1-Dichloroethane	10048278	HS405_00341B-13	3.3	U						10
cis-1,2-Dichloroethylene	10048278	HS405_00341B-13	3.4	U						11
Methyl ethyl ketone	10048278	HS405_00341B-13	40.0	U						12
Chloroform	10048278	HS405_00341B-13	2.8	U						13
1,1,1-Trichloroethane	10048278	HS405_00341B-13	2.6	U						14
Cyclohexane	10048278	HS405_00341B-13	3.3	U						15
Carbon tetrachloride	10048278	HS405_00341B-13	2.5	U						16
Benzene	10048278	HS405_00341B-13	3.9	U						17
1,2-Dichloroethane	10048278	HS405_00341B-13	2.5	U						18
Trichloroethylene	10048278	HS405_00341B-13	2.8	U						19
Butanol	10048278	HS405_00341B-13	40.0	U						20
Methyl isobutyl ketone	10048278	HS405_00341B-13	38.0	U						21
Toluene	10048278	HS405_00341B-13	3.7	U						22
Tetrachloroethylene	10048278	HS405_00341B-13	2.8	U						23
Chlorobenzene	10048278	HS405_00341B-13	3.3	U						24
Ethyl benzene	10048278	HS405_00341B-13	3.3	U						25
m&p-Xylene	10048278	HS405_00341B-13	3.1	U						26
o-Xylene	10048278	HS405_00341B-13	3.7	U						27
Bromoform	10048278	HS405_00341B-13	3.0	U						28

Analyte	Container	Sample no	Concentration (ppm)	U	D	Z	J	E	B	Analyte Order
1,1,2,2-Tetrachloroethane	10048278	HS405_00341B-13	3.5	U						29
1,3,5-Trimethylbenzene	10048278	HS405_00341B-13	3.2	U						30
1,2,4-Trimethylbenzene	10048278	HS405_00341B-13	3.1	U						31
Chloromethane	10048279	HS405_00332B-16	2.3	U						1
Methanol	10048279	HS405_00332B-16	72.0				J			2
Ethyl ether	10048279	HS405_00332B-16	3.4	U						3
1,1-Dichloroethylene	10048279	HS405_00332B-16	3.0	U						4
1,1,2-Trichloro-1,2,2-trifluoroethane	10048279	HS405_00332B-16	3.0	U						5
Acetone	10048279	HS405_00332B-16	35.0	U						6
Carbon disulfide	10048279	HS405_00332B-16	3.4	U						7
Methylene chloride	10048279	HS405_00332B-16	3.7	U						8
trans-1,2-Dichloroethylene	10048279	HS405_00332B-16	3.8	U						9
1,1-Dichloroethane	10048279	HS405_00332B-16	3.3	U						10
cis-1,2-Dichloroethylene	10048279	HS405_00332B-16	3.4	U						11
Methyl ethyl ketone	10048279	HS405_00332B-16	40.0	U						12
Chloroform	10048279	HS405_00332B-16	2.8	U						13
1,1,1-Trichloroethane	10048279	HS405_00332B-16	42.0							14
Cyclohexane	10048279	HS405_00332B-16	3.3	U						15
Carbon tetrachloride	10048279	HS405_00332B-16	2.5	U						16
Benzene	10048279	HS405_00332B-16	3.9	U						17
1,2-Dichloroethane	10048279	HS405_00332B-16	2.5	U						18
Trichloroethylene	10048279	HS405_00332B-16	2.8	U						19
Butanol	10048279	HS405_00332B-16	40.0	U						20
Methyl isobutyl ketone	10048279	HS405_00332B-16	38.0	U						21
Toluene	10048279	HS405_00332B-16	3.7	U						22
Tetrachloroethylene	10048279	HS405_00332B-16	2.8	U						23
Chlorobenzene	10048279	HS405_00332B-16	3.3	U						24
Ethyl benzene	10048279	HS405_00332B-16	3.3	U						25
m&p-Xylene	10048279	HS405_00332B-16	3.1	U						26
o-Xylene	10048279	HS405_00332B-16	3.7	U						27
Bromoform	10048279	HS405_00332B-16	3.0	U						28
1,1,2,2-Tetrachloroethane	10048279	HS405_00332B-16	3.5	U						29
1,3,5-Trimethylbenzene	10048279	HS405_00332B-16	3.2	U						30
1,2,4-Trimethylbenzene	10048279	HS405_00332B-16	3.1	U						31
Chloromethane	10048280	HS505_00071B-16	5.2	U						1
Methanol	10048280	HS505_00071B-16	230.0							2
Ethyl ether	10048280	HS505_00071B-16	4.6	U						3
1,1-Dichloroethylene	10048280	HS505_00071B-16	4.9	U						4
1,1,2-Trichloro-1,2,2-trifluoroethane	10048280	HS505_00071B-16	4.7	U						5
Acetone	10048280	HS505_00071B-16	51.0	U						6
Carbon disulfide	10048280	HS505_00071B-16	5.0	U						7
Methylene chloride	10048280	HS505_00071B-16	4.6	U						8
trans-1,2-Dichloroethylene	10048280	HS505_00071B-16	4.5	U						9
1,1-Dichloroethane	10048280	HS505_00071B-16	4.7	U						10
cis-1,2-Dichloroethylene	10048280	HS505_00071B-16	4.5	U						11
Methyl ethyl ketone	10048280	HS505_00071B-16	49.0	U						12
Chloroform	10048280	HS505_00071B-16	4.6	U						13
1,1,1-Trichloroethane	10048280	HS505_00071B-16	4.6	U						14
Cyclohexane	10048280	HS505_00071B-16	4.4	U						15
Carbon tetrachloride	10048280	HS505_00071B-16	4.9	U						16
Benzene	10048280	HS505_00071B-16	4.5	U						17
1,2-Dichloroethane	10048280	HS505_00071B-16	4.7	U						18
Trichloroethylene	10048280	HS505_00071B-16	4.6	U						19
Butanol	10048280	HS505_00071B-16	55.0	U						20
Methyl isobutyl ketone	10048280	HS505_00071B-16	39.0	U						21
Toluene	10048280	HS505_00071B-16	4.1	U						22
Tetrachloroethylene	10048280	HS505_00071B-16	3.7	U						23
Chlorobenzene	10048280	HS505_00071B-16	4.2	U						24
Ethyl benzene	10048280	HS505_00071B-16	4.3	U						25
m&p-Xylene	10048280	HS505_00071B-16	3.8	U						26
o-Xylene	10048280	HS505_00071B-16	4.4	U						27
Bromoform	10048280	HS505_00071B-16	4.0	U						28
1,1,2,2-Tetrachloroethane	10048280	HS505_00071B-16	4.7	U						29
1,3,5-Trimethylbenzene	10048280	HS505_00071B-16	4.6	U						30
1,2,4-Trimethylbenzene	10048280	HS505_00071B-16	4.7	U						31
Chloromethane	10048287	HS205_00282B-21	3.2	U						1
Methanol	10048287	HS205_00282B-21	410.0							2
Ethyl ether	10048287	HS205_00282B-21	3.4	U						3
1,1-Dichloroethylene	10048287	HS205_00282B-21	2.5	U						4
1,1,2-Trichloro-1,2,2-trifluoroethane	10048287	HS205_00282B-21	3.3	U						5
Acetone	10048287	HS205_00282B-21	13.0	U						6
Carbon disulfide	10048287	HS205_00282B-21	2.5	U						7
Methylene chloride	10048287	HS205_00282B-21	1.5	U						8
trans-1,2-Dichloroethylene	10048287	HS205_00282B-21	1.2	U						9
1,1-Dichloroethane	10048287	HS205_00282B-21	1.6	U						10
cis-1,2-Dichloroethylene	10048287	HS205_00282B-21	1.4	U						11

Analyte	Container	Sample no.	Concentration (ppm)	U	D	Z	J	E	B	Analyte Order
Methyl ethyl ketone	10048287	HS205_00282B-21	13.0	U						12
Chloroform	10048287	HS205_00282B-21	1.6	U						13
1,1,1-Trichloroethane	10048287	HS205_00282B-21	28.0							14
Cyclohexane	10048287	HS205_00282B-21	1.3	U						15
Carbon tetrachloride	10048287	HS205_00282B-21	2.6	U						16
Benzene	10048287	HS205_00282B-21	1.4	U						17
1,2-Dichloroethane	10048287	HS205_00282B-21	2.1	U						18
Trichloroethylene	10048287	HS205_00282B-21	1.7				J			19
Butanol	10048287	HS205_00282B-21	16.0	U						20
Methyl isobutyl ketone	10048287	HS205_00282B-21	10.0	U						21
Toluene	10048287	HS205_00282B-21	2.4				J			22
Tetrachloroethylene	10048287	HS205_00282B-21	1.5	U						23
Chlorobenzene	10048287	HS205_00282B-21	1.2	U						24
Ethyl benzene	10048287	HS205_00282B-21	1.0	U						25
m&p-Xylene	10048287	HS205_00282B-21	1.1	U						26
o-Xylene	10048287	HS205_00282B-21	1.5	U						27
Bromoform	10048287	HS205_00282B-21	1.2	U						28
1,1,2,2-Tetrachloroethane	10048287	HS205_00282B-21	1.0	U						29
1,3,5-Trimethylbenzene	10048287	HS205_00282B-21	0.9	U						30
1,2,4-Trimethylbenzene	10048287	HS205_00282B-21	0.6	U						31
Chloromethane	10048296	HS405_00332B-01	2.3	U						1
Methanol	10048296	HS405_00332B-01	54.0				J			2
Ethyl ether	10048296	HS405_00332B-01	3.4	U						3
1,1-Dichloroethylene	10048296	HS405_00332B-01	3.0	U						4
1,1,2-Trichloro-1,2,2-trifluoroethane	10048296	HS405_00332B-01	3.0	U						5
Acetone	10048296	HS405_00332B-01	35.0	U						6
Carbon disulfide	10048296	HS405_00332B-01	3.4	U						7
Methylene chloride	10048296	HS405_00332B-01	3.7	U						8
trans-1,2-Dichloroethylene	10048296	HS405_00332B-01	3.8	U						9
1,1-Dichloroethane	10048296	HS405_00332B-01	3.3	U						10
cis-1,2-Dichloroethylene	10048296	HS405_00332B-01	3.4	U						11
Methyl ethyl ketone	10048296	HS405_00332B-01	40.0	U						12
Chloroform	10048296	HS405_00332B-01	2.8	U						13
1,1,1-Trichloroethane	10048296	HS405_00332B-01	52.0							14
Cyclohexane	10048296	HS405_00332B-01	3.3	U						15
Carbon tetrachloride	10048296	HS405_00332B-01	2.5	U						16
Benzene	10048296	HS405_00332B-01	3.9	U						17
1,2-Dichloroethane	10048296	HS405_00332B-01	2.5	U						18
Trichloroethylene	10048296	HS405_00332B-01	2.8	U						19
Butanol	10048296	HS405_00332B-01	40.0	U						20
Methyl isobutyl ketone	10048296	HS405_00332B-01	38.0	U						21
Toluene	10048296	HS405_00332B-01	3.7	U						22
Tetrachloroethylene	10048296	HS405_00332B-01	2.8	U						23
Chlorobenzene	10048296	HS405_00332B-01	3.3	U						24
Ethyl benzene	10048296	HS405_00332B-01	3.3	U						25
m&p-Xylene	10048296	HS405_00332B-01	3.1	U						26
o-Xylene	10048296	HS405_00332B-01	3.7	U						27
Bromoform	10048296	HS405_00332B-01	3.0	U						28
1,1,2,2-Tetrachloroethane	10048296	HS405_00332B-01	3.5	U						29
1,3,5-Trimethylbenzene	10048296	HS405_00332B-01	3.2	U						30
1,2,4-Trimethylbenzene	10048296	HS405_00332B-01	3.1	U						31
Chloromethane	10048395	HS405_00332B-17	2.3	U						1
Methanol	10048395	HS405_00332B-17	42.0	U						2
Ethyl ether	10048395	HS405_00332B-17	3.4	U						3
1,1-Dichloroethylene	10048395	HS405_00332B-17	3.0	U						4
1,1,2-Trichloro-1,2,2-trifluoroethane	10048395	HS405_00332B-17	3.0	U						5
Acetone	10048395	HS405_00332B-17	35.0	U						6
Carbon disulfide	10048395	HS405_00332B-17	3.4	U						7
Methylene chloride	10048395	HS405_00332B-17	3.7	U						8
trans-1,2-Dichloroethylene	10048395	HS405_00332B-17	3.8	U						9
1,1-Dichloroethane	10048395	HS405_00332B-17	3.3	U						10
cis-1,2-Dichloroethylene	10048395	HS405_00332B-17	3.4	U						11
Methyl ethyl ketone	10048395	HS405_00332B-17	40.0	U						12
Chloroform	10048395	HS405_00332B-17	2.8	U						13
1,1,1-Trichloroethane	10048395	HS405_00332B-17	2.6	U						14
Cyclohexane	10048395	HS405_00332B-17	4.1				J			15
Carbon tetrachloride	10048395	HS405_00332B-17	2.5	U						16
Benzene	10048395	HS405_00332B-17	3.9	U						17
1,2-Dichloroethane	10048395	HS405_00332B-17	2.5	U						18
Trichloroethylene	10048395	HS405_00332B-17	2.8	U						19
Butanol	10048395	HS405_00332B-17	40.0	U						20
Methyl isobutyl ketone	10048395	HS405_00332B-17	38.0	U						21
Toluene	10048395	HS405_00332B-17	3.7	U						22
Tetrachloroethylene	10048395	HS405_00332B-17	2.8	U						23
Chlorobenzene	10048395	HS405_00332B-17	3.3	U						24
Ethyl benzene	10048395	HS405_00332B-17	3.3	U						25

Analyte	Container	Sample no	Concentration (ppm)	U	D	Z	J	E	B	Analyte Order
m&p-Xylene	10048395	HS405_00332B-17	3.1	U						26
o-Xylene	10048395	HS405_00332B-17	3.7	U						27
Bromoform	10048395	HS405_00332B-17	3.0	U						28
1,1,2,2-Tetrachloroethane	10048395	HS405_00332B-17	3.5	U						29
1,3,5-Trimethylbenzene	10048395	HS405_00332B-17	3.2	U						30
1,2,4-Trimethylbenzene	10048395	HS405_00332B-17	3.1	U						31
Chloromethane	10048401	HS505_00068B-05	5.2	U						1
Methanol	10048401	HS505_00068B-05	72.0	U						2
Ethyl ether	10048401	HS505_00068B-05	4.6	U						3
1,1-Dichloroethylene	10048401	HS505_00068B-05	4.9	U						4
1,1,2-Trichloro-1,2,2-trifluoroethane	10048401	HS505_00068B-05	4.7	U						5
Acetone	10048401	HS505_00068B-05	51.0	U						6
Carbon disulfide	10048401	HS505_00068B-05	5.0	U						7
Methylene chloride	10048401	HS505_00068B-05	4.6	U						8
trans-1,2-Dichloroethylene	10048401	HS505_00068B-05	4.5	U						9
1,1-Dichloroethane	10048401	HS505_00068B-05	4.7	U						10
cis-1,2-Dichloroethylene	10048401	HS505_00068B-05	4.5	U						11
Methyl ethyl ketone	10048401	HS505_00068B-05	49.0	U						12
Chloroform	10048401	HS505_00068B-05	4.6	U						13
1,1,1-Trichloroethane	10048401	HS505_00068B-05	4.6	U						14
Cyclohexane	10048401	HS505_00068B-05	4.4	U						15
Carbon tetrachloride	10048401	HS505_00068B-05	4.9	U						16
Benzene	10048401	HS505_00068B-05	4.5	U						17
1,2-Dichloroethane	10048401	HS505_00068B-05	4.7	U						18
Trichloroethylene	10048401	HS505_00068B-05	4.6	U						19
Butanol	10048401	HS505_00068B-05	55.0	U						20
Methyl isobutyl ketone	10048401	HS505_00068B-05	39.0	U						21
Toluene	10048401	HS505_00068B-05	4.1	U						22
Tetrachloroethylene	10048401	HS505_00068B-05	3.7	U						23
Chlorobenzene	10048401	HS505_00068B-05	4.2	U						24
Ethyl benzene	10048401	HS505_00068B-05	4.3	U						25
m&p-Xylene	10048401	HS505_00068B-05	3.8	U						26
o-Xylene	10048401	HS505_00068B-05	4.4	U						27
Bromoform	10048401	HS505_00068B-05	4.0	U						28
1,1,2,2-Tetrachloroethane	10048401	HS505_00068B-05	4.7	U						29
1,3,5-Trimethylbenzene	10048401	HS505_00068B-05	4.6	U						30
1,2,4-Trimethylbenzene	10048401	HS505_00068B-05	4.7	U						31
Chloromethane	10048402	HS505_00069B-10	5.2	U						1
Methanol	10048402	HS505_00069B-10	72.0	U						2
Ethyl ether	10048402	HS505_00069B-10	4.6	U						3
1,1-Dichloroethylene	10048402	HS505_00069B-10	4.9	U						4
1,1,2-Trichloro-1,2,2-trifluoroethane	10048402	HS505_00069B-10	4.7	U						5
Acetone	10048402	HS505_00069B-10	51.0	U						6
Carbon disulfide	10048402	HS505_00069B-10	5.0	U						7
Methylene chloride	10048402	HS505_00069B-10	4.6	U						8
trans-1,2-Dichloroethylene	10048402	HS505_00069B-10	4.5	U						9
1,1-Dichloroethane	10048402	HS505_00069B-10	4.7	U						10
cis-1,2-Dichloroethylene	10048402	HS505_00069B-10	4.5	U						11
Methyl ethyl ketone	10048402	HS505_00069B-10	49.0	U						12
Chloroform	10048402	HS505_00069B-10	4.6	U						13
1,1,1-Trichloroethane	10048402	HS505_00069B-10	4.6	U						14
Cyclohexane	10048402	HS505_00069B-10	4.4	U						15
Carbon tetrachloride	10048402	HS505_00069B-10	4.9	U						16
Benzene	10048402	HS505_00069B-10	4.5	U						17
1,2-Dichloroethane	10048402	HS505_00069B-10	4.7	U						18
Trichloroethylene	10048402	HS505_00069B-10	4.6	U						19
Butanol	10048402	HS505_00069B-10	55.0	U						20
Methyl isobutyl ketone	10048402	HS505_00069B-10	39.0	U						21
Toluene	10048402	HS505_00069B-10	4.1	U						22
Tetrachloroethylene	10048402	HS505_00069B-10	3.7	U						23
Chlorobenzene	10048402	HS505_00069B-10	4.2	U						24
Ethyl benzene	10048402	HS505_00069B-10	4.3	U						25
m&p-Xylene	10048402	HS505_00069B-10	3.8	U						26
o-Xylene	10048402	HS505_00069B-10	4.4	U						27
Bromoform	10048402	HS505_00069B-10	4.0	U						28
1,1,2,2-Tetrachloroethane	10048402	HS505_00069B-10	4.7	U						29
1,3,5-Trimethylbenzene	10048402	HS505_00069B-10	4.6	U						30
1,2,4-Trimethylbenzene	10048402	HS505_00069B-10	4.7	U						31
Chloromethane	10048403	HS505_00069B-16	5.2	U						1
Methanol	10048403	HS505_00069B-16	72.0	U						2
Ethyl ether	10048403	HS505_00069B-16	4.6	U						3
1,1-Dichloroethylene	10048403	HS505_00069B-16	4.9	U						4
1,1,2-Trichloro-1,2,2-trifluoroethane	10048403	HS505_00069B-16	4.7	U						5
Acetone	10048403	HS505_00069B-16	51.0	U						6
Carbon disulfide	10048403	HS505_00069B-16	5.0	U						7
Methylene chloride	10048403	HS505_00069B-16	4.6	U						8

Analyte	Container	Sample no	Concentration (ppm)	U	D	Z	J	E	B	Analyte Order
trans-1,2-Dichloroethylene	10048403	HS505_00069B-16	4.5	U						9
1,1-Dichloroethane	10048403	HS505_00069B-16	4.7	U						10
cis-1,2-Dichloroethylene	10048403	HS505_00069B-16	4.5	U						11
Methyl ethyl ketone	10048403	HS505_00069B-16	49.0	U						12
Chloroform	10048403	HS505_00069B-16	4.6	U						13
1,1,1-Trichloroethane	10048403	HS505_00069B-16	4.6	U						14
Cyclohexane	10048403	HS505_00069B-16	4.4	U						15
Carbon tetrachloride	10048403	HS505_00069B-16	4.9	U						16
Benzene	10048403	HS505_00069B-16	4.5	U						17
1,2-Dichloroethane	10048403	HS505_00069B-16	4.7	U						18
Trichloroethylene	10048403	HS505_00069B-16	4.6	U						19
Butanol	10048403	HS505_00069B-16	55.0	U						20
Methyl isobutyl ketone	10048403	HS505_00069B-16	39.0	U						21
Toluene	10048403	HS505_00069B-16	4.1	U						22
Tetrachloroethylene	10048403	HS505_00069B-16	3.7	U						23
Chlorobenzene	10048403	HS505_00069B-16	4.2	U						24
Ethyl benzene	10048403	HS505_00069B-16	4.3	U						25
m&p-Xylene	10048403	HS505_00069B-16	3.8	U						26
o-Xylene	10048403	HS505_00069B-16	4.4	U						27
Bromoform	10048403	HS505_00069B-16	4.0	U						28
1,1,2,2-Tetrachloroethane	10048403	HS505_00069B-16	4.7	U						29
1,3,5-Trimethylbenzene	10048403	HS505_00069B-16	4.6	U						30
1,2,4-Trimethylbenzene	10048403	HS505_00069B-16	4.7	U						31
Chloromethane	10048405	HS405_00312B-03	2.3	U						1
Methanol	10048405	HS405_00312B-03	820.0							2
Ethyl ether	10048405	HS405_00312B-03	3.4	U						3
1,1-Dichloroethylene	10048405	HS405_00312B-03	7.4				J			4
1,1,2-Trichloro-1,2,2-trifluoroethane	10048405	HS405_00312B-03	3.0	U						5
Acetone	10048405	HS405_00312B-03	35.0	U						6
Carbon disulfide	10048405	HS405_00312B-03	3.4	U						7
Methylene chloride	10048405	HS405_00312B-03	3.7	U						8
trans-1,2-Dichloroethylene	10048405	HS405_00312B-03	3.8	U						9
1,1-Dichloroethane	10048405	HS405_00312B-03	3.3	U						10
cis-1,2-Dichloroethylene	10048405	HS405_00312B-03	3.4	U						11
Methyl ethyl ketone	10048405	HS405_00312B-03	40.0	U						12
Chloroform	10048405	HS405_00312B-03	2.8	U						13
1,1,1-Trichloroethane	10048405	HS405_00312B-03	120.0							14
Cyclohexane	10048405	HS405_00312B-03	3.3	U						15
Carbon tetrachloride	10048405	HS405_00312B-03	2.5	U						16
Benzene	10048405	HS405_00312B-03	3.9	U						17
1,2-Dichloroethane	10048405	HS405_00312B-03	2.5	U						18
Trichloroethylene	10048405	HS405_00312B-03	2.8	U						19
Butanol	10048405	HS405_00312B-03	40.0	U						20
Methyl isobutyl ketone	10048405	HS405_00312B-03	38.0	U						21
Toluene	10048405	HS405_00312B-03	3.7	U						22
Tetrachloroethylene	10048405	HS405_00312B-03	2.8	U						23
Chlorobenzene	10048405	HS405_00312B-03	3.3	U						24
Ethyl benzene	10048405	HS405_00312B-03	3.3	U						25
m&p-Xylene	10048405	HS405_00312B-03	3.1	U						26
o-Xylene	10048405	HS405_00312B-03	3.7	U						27
Bromoform	10048405	HS405_00312B-03	3.0	U						28
1,1,2,2-Tetrachloroethane	10048405	HS405_00312B-03	3.5	U						29
1,3,5-Trimethylbenzene	10048405	HS405_00312B-03	3.2	U						30
1,2,4-Trimethylbenzene	10048405	HS405_00312B-03	3.1	U						31
Chloromethane	10048444	HS505_00072B-13	5.2	U						1
Methanol	10048444	HS505_00072B-13	130.0							2
Ethyl ether	10048444	HS505_00072B-13	4.6	U						3
1,1-Dichloroethylene	10048444	HS505_00072B-13	4.9	U						4
1,1,2-Trichloro-1,2,2-trifluoroethane	10048444	HS505_00072B-13	4.7	U						5
Acetone	10048444	HS505_00072B-13	51.0	U						6
Carbon disulfide	10048444	HS505_00072B-13	5.0	U						7
Methylene chloride	10048444	HS505_00072B-13	4.6	U						8
trans-1,2-Dichloroethylene	10048444	HS505_00072B-13	4.5	U						9
1,1-Dichloroethane	10048444	HS505_00072B-13	4.7	U						10
cis-1,2-Dichloroethylene	10048444	HS505_00072B-13	4.5	U						11
Methyl ethyl ketone	10048444	HS505_00072B-13	49.0	U						12
Chloroform	10048444	HS505_00072B-13	4.6	U						13
1,1,1-Trichloroethane	10048444	HS505_00072B-13	4.6	U						14
Cyclohexane	10048444	HS505_00072B-13	4.4	U						15
Carbon tetrachloride	10048444	HS505_00072B-13	4.9	U						16
Benzene	10048444	HS505_00072B-13	4.5	U						17
1,2-Dichloroethane	10048444	HS505_00072B-13	4.7	U						18
Trichloroethylene	10048444	HS505_00072B-13	4.6	U						19
Butanol	10048444	HS505_00072B-13	55.0	U						20
Methyl isobutyl ketone	10048444	HS505_00072B-13	39.0	U						21
Toluene	10048444	HS505_00072B-13	4.1	U						22

Analyte	Container	Sample no	Concentration (ppm)	U	D	Z	J	E	B	Analyte Order
Tetrachloroethylene	10048444	HS505_00072B-13	3.7	U						23
Chlorobenzene	10048444	HS505_00072B-13	4.2	U						24
Ethyl benzene	10048444	HS505_00072B-13	4.3	U						25
m&p-Xylene	10048444	HS505_00072B-13	3.8	U						26
o-Xylene	10048444	HS505_00072B-13	4.4	U						27
Bromoform	10048444	HS505_00072B-13	4.0	U						28
1,1,2,2-Tetrachloroethane	10048444	HS505_00072B-13	4.7	U						29
1,3,5-Trimethylbenzene	10048444	HS505_00072B-13	4.6	U						30
1,2,4-Trimethylbenzene	10048444	HS505_00072B-13	4.7	U						31
Chloromethane	10048446	HS405_00332B-06	2.3	U						1
Methanol	10048446	HS405_00332B-06	42.0	U						2
Ethyl ether	10048446	HS405_00332B-06	3.4	U						3
1,1-Dichloroethylene	10048446	HS405_00332B-06	3.0	U						4
1,1,2-Trichloro-1,2,2-trifluoroethane	10048446	HS405_00332B-06	3.0	U						5
Acetone	10048446	HS405_00332B-06	35.0	U						6
Carbon disulfide	10048446	HS405_00332B-06	3.4	U						7
Methylene chloride	10048446	HS405_00332B-06	3.7	U						8
trans-1,2-Dichloroethylene	10048446	HS405_00332B-06	3.8	U						9
1,1-Dichloroethane	10048446	HS405_00332B-06	3.3	U						10
cis-1,2-Dichloroethylene	10048446	HS405_00332B-06	3.4	U						11
Methyl ethyl ketone	10048446	HS405_00332B-06	40.0	U						12
Chloroform	10048446	HS405_00332B-06	2.8	U						13
1,1,1-Trichloroethane	10048446	HS405_00332B-06	54.0							14
Cyclohexane	10048446	HS405_00332B-06	3.3	U						15
Carbon tetrachloride	10048446	HS405_00332B-06	2.5	U						16
Benzene	10048446	HS405_00332B-06	3.9	U						17
1,2-Dichloroethane	10048446	HS405_00332B-06	2.5	U						18
Trichloroethylene	10048446	HS405_00332B-06	7.1				J			19
Butanol	10048446	HS405_00332B-06	40.0	U						20
Methyl isobutyl ketone	10048446	HS405_00332B-06	38.0	U						21
Toluene	10048446	HS405_00332B-06	3.7	U						22
Tetrachloroethylene	10048446	HS405_00332B-06	2.8	U						23
Chlorobenzene	10048446	HS405_00332B-06	3.3	U						24
Ethyl benzene	10048446	HS405_00332B-06	3.3	U						25
m&p-Xylene	10048446	HS405_00332B-06	3.1	U						26
o-Xylene	10048446	HS405_00332B-06	3.7	U						27
Bromoform	10048446	HS405_00332B-06	3.0	U						28
1,1,2,2-Tetrachloroethane	10048446	HS405_00332B-06	3.5	U						29
1,3,5-Trimethylbenzene	10048446	HS405_00332B-06	3.2	U						30
1,2,4-Trimethylbenzene	10048446	HS405_00332B-06	3.1	U						31
Chloromethane	10048447	HS105_00167B-13	2.5	U						1
Methanol	10048447	HS105_00167B-13	73.0	U						2
Ethyl ether	10048447	HS105_00167B-13	2.5	U						3
1,1-Dichloroethylene	10048447	HS105_00167B-13	2.7	U						4
1,1,2-Trichloro-1,2,2-trifluoroethane	10048447	HS105_00167B-13	2.8	U						5
Acetone	10048447	HS105_00167B-13	13.0	U						6
Carbon disulfide	10048447	HS105_00167B-13	2.6	U						7
Methylene chloride	10048447	HS105_00167B-13	1.6	U						8
trans-1,2-Dichloroethylene	10048447	HS105_00167B-13	1.4	U						9
1,1-Dichloroethane	10048447	HS105_00167B-13	1.5	U						10
cis-1,2-Dichloroethylene	10048447	HS105_00167B-13	1.5	U						11
Methyl ethyl ketone	10048447	HS105_00167B-13	16.0	U						12
Chloroform	10048447	HS105_00167B-13	1.3	U						13
1,1,1-Trichloroethane	10048447	HS105_00167B-13	85.0							14
Cyclohexane	10048447	HS105_00167B-13	1.2	U						15
Carbon tetrachloride	10048447	HS105_00167B-13	1.9	U						16
Benzene	10048447	HS105_00167B-13	1.2	U						17
1,2-Dichloroethane	10048447	HS105_00167B-13	1.7	U						18
Trichloroethylene	10048447	HS105_00167B-13	1.6	U						19
Butanol	10048447	HS105_00167B-13	47.0	U						20
Methyl isobutyl ketone	10048447	HS105_00167B-13	30.0	U						21
Toluene	10048447	HS105_00167B-13	1.6				J			22
Tetrachloroethylene	10048447	HS105_00167B-13	1.3	U						23
Chlorobenzene	10048447	HS105_00167B-13	1.4	U						24
Ethyl benzene	10048447	HS105_00167B-13	1.5	U						25
m&p-Xylene	10048447	HS105_00167B-13	1.3	U						26
o-Xylene	10048447	HS105_00167B-13	1.5	U						27
Bromoform	10048447	HS105_00167B-13	1.3	U						28
1,1,2,2-Tetrachloroethane	10048447	HS105_00167B-13	1.2	U						29
1,3,5-Trimethylbenzene	10048447	HS105_00167B-13	1.3	U						30
1,2,4-Trimethylbenzene	10048447	HS105_00167B-13	1.2	U						31
Chloromethane	10048449	HS505_00068B-10	5.2	U						1
Methanol	10048449	HS505_00068B-10	620.0							2
Ethyl ether	10048449	HS505_00068B-10	4.8	U						3
1,1-Dichloroethylene	10048449	HS505_00068B-10	4.9	U						4
1,1,2-Trichloro-1,2,2-trifluoroethane	10048449	HS505_00068B-10	4.7	U						5

Analyte	Container	Sample no	Concentration (ppm)	U	D	Z	J	E	B	Analyte Order
Acetone	10048449	HS505_00068B-10	51 0	U						6
Carbon disulfide	10048449	HS505_00068B-10	5 0	U						7
Methylene chloride	10048449	HS505_00068B-10	4 6	U						8
trans-1,2-Dichloroethylene	10048449	HS505_00068B-10	4 5	U						9
1,1-Dichloroethane	10048449	HS505_00068B-10	4 7	U						10
cis-1,2-Dichloroethylene	10048449	HS505_00068B-10	4 5	U						11
Methyl ethyl ketone	10048449	HS505_00068B-10	49 0	U						12
Chloroform	10048449	HS505_00068B-10	4 6	U						13
1,1,1-Trichloroethane	10048449	HS505_00068B-10	4 6	U						14
Cyclohexane	10048449	HS505_00068B-10	12 0							15
Carbon tetrachloride	10048449	HS505_00068B-10	4 9	U						16
Benzene	10048449	HS505_00068B-10	4 5	U						17
1,2-Dichloroethane	10048449	HS505_00068B-10	4 7	U						18
Trichloroethylene	10048449	HS505_00068B-10	4 6	U						19
Butanol	10048449	HS505_00068B-10	55 0	U						20
Methyl isobutyl ketone	10048449	HS505_00068B-10	39 0	U						21
Toluene	10048449	HS505_00068B-10	4 1	U						22
Tetrachloroethylene	10048449	HS505_00068B-10	3 7	U						23
Chlorobenzene	10048449	HS505_00068B-10	4 2	U						24
Ethyl benzene	10048449	HS505_00068B-10	4 3	U						25
m&p-Xylene	10048449	HS505_00068B-10	3 8	U						26
o-Xylene	10048449	HS505_00068B-10	4 4	U						27
Bromoform	10048449	HS505_00068B-10	4 0	U						28
1,1,2,2-Tetrachloroethane	10048449	HS505_00068B-10	4 7	U						29
1,3,5-Trimethylbenzene	10048449	HS505_00068B-10	4 6	U						30
1,2,4-Trimethylbenzene	10048449	HS505_00068B-10	4 7	U						31
Chloromethane	10048453	HS205_00303B-07	3 2	U						1
Methanol	10048453	HS205_00303B-07	320 0							2
Ethyl ether	10048453	HS205_00303B-07	3 4	U						3
1,1-Dichloroethylene	10048453	HS205_00303B-07	2 5	U						4
1,1,2-Trichloro-1,2,2-trifluoroethane	10048453	HS205_00303B-07	3 3	U						5
Acetone	10048453	HS205_00303B-07	13 0	U						6
Carbon disulfide	10048453	HS205_00303B-07	2 5	U						7
Methylene chloride	10048453	HS205_00303B-07	1 5	U						8
trans-1,2-Dichloroethylene	10048453	HS205_00303B-07	1 2	U						9
1,1-Dichloroethane	10048453	HS205_00303B-07	1 6	U						10
cis-1,2-Dichloroethylene	10048453	HS205_00303B-07	1 4	U						11
Methyl ethyl ketone	10048453	HS205_00303B-07	13 0	U						12
Chloroform	10048453	HS205_00303B-07	1 6	U						13
1,1,1-Trichloroethane	10048453	HS205_00303B-07	2 2	U						14
Cyclohexane	10048453	HS205_00303B-07	1 3	U						15
Carbon tetrachloride	10048453	HS205_00303B-07	2 6	U						16
Benzene	10048453	HS205_00303B-07	1 4	U						17
1,2-Dichloroethane	10048453	HS205_00303B-07	2 1	U						18
Trichloroethylene	10048453	HS205_00303B-07	1 4	U						19
Butanol	10048453	HS205_00303B-07	16 0	U						20
Methyl isobutyl ketone	10048453	HS205_00303B-07	10 0	U						21
Toluene	10048453	HS205_00303B-07	1 3				J			22
Tetrachloroethylene	10048453	HS205_00303B-07	1 5	U						23
Chlorobenzene	10048453	HS205_00303B-07	1 2	U						24
Ethyl benzene	10048453	HS205_00303B-07	1 0	U						25
m&p-Xylene	10048453	HS205_00303B-07	1 1	U						26
o-Xylene	10048453	HS205_00303B-07	1 5	U						27
Bromoform	10048453	HS205_00303B-07	1 2	U						28
1,1,2,2-Tetrachloroethane	10048453	HS205_00303B-07	1 0	U						29
1,3,5-Trimethylbenzene	10048453	HS205_00303B-07	0 9	U						30
1,2,4-Trimethylbenzene	10048453	HS205_00303B-07	0 6	U						31
Chloromethane	10048454	HS205_00303B-02	5 2				J			1
Methanol	10048454	HS205_00303B-02	47 0	U						2
Ethyl ether	10048454	HS205_00303B-02	3 4	U						3
1,1-Dichloroethylene	10048454	HS205_00303B-02	2 5	U						4
1,1,2-Trichloro-1,2,2-trifluoroethane	10048454	HS205_00303B-02	6 3				J			5
Acetone	10048454	HS205_00303B-02	37 0				J			6
Carbon disulfide	10048454	HS205_00303B-02	2 5	U						7
Methylene chloride	10048454	HS205_00303B-02	1 5	U						8
trans-1,2-Dichloroethylene	10048454	HS205_00303B-02	1 2	U						9
1,1-Dichloroethane	10048454	HS205_00303B-02	6 6				J			10
cis-1,2-Dichloroethylene	10048454	HS205_00303B-02	1 4	U						11
Methyl ethyl ketone	10048454	HS205_00303B-02	13 0	U						12
Chloroform	10048454	HS205_00303B-02	1 6	U						13
1,1,1-Trichloroethane	10048454	HS205_00303B-02	6 8				J			14
Cyclohexane	10048454	HS205_00303B-02	1 3	U						15
Carbon tetrachloride	10048454	HS205_00303B-02	2 6	U						16
Benzene	10048454	HS205_00303B-02	2 6				J			17
1,2-Dichloroethane	10048454	HS205_00303B-02	2 1	U						18
Trichloroethylene	10048454	HS205_00303B-02	1 4	U						19

Analyte	Container	Sample no	Concentration (ppm)	C	D	Z	J	E	B	Analyte Order
Butanol	10048454	HS205_00303B-02	16.0	U						20
Methyl isobutyl ketone	10048454	HS205_00303B-02	17.0				J			21
Toluene	10048454	HS205_00303B-02	270.0		D					22
Tetrachloroethylene	10048454	HS205_00303B-02	1.5	U						23
Chlorobenzene	10048454	HS205_00303B-02	1.2	U						24
Ethyl benzene	10048454	HS205_00303B-02	3.3				J			25
m&p-Xylene	10048454	HS205_00303B-02	7.4				J			26
o-Xylene	10048454	HS205_00303B-02	2.5				J			27
Bromoform	10048454	HS205_00303B-02	1.2	U						28
1,1,2,2-Tetrachloroethane	10048454	HS205_00303B-02	1.0	U						29
1,3,5-Trimethylbenzene	10048454	HS205_00303B-02	1.6				J			30
1,2,4-Trimethylbenzene	10048454	HS205_00303B-02	3.8				J			31
Chloromethane	10048456	HS505_00067B-20	5.2	U						1
Methanol	10048456	HS505_00067B-20	72.0	U						2
Ethyl ether	10048456	HS505_00067B-20	4.6	U						3
1,1-Dichloroethylene	10048456	HS505_00067B-20	4.9	U						4
1,1,2-Trichloro-1,2,2-trifluoroethane	10048456	HS505_00067B-20	4.7	U						5
Acetone	10048456	HS505_00067B-20	51.0	U						6
Carbon disulfide	10048456	HS505_00067B-20	5.0	U						7
Methylene chloride	10048456	HS505_00067B-20	4.6	U						8
trans-1,2-Dichloroethylene	10048456	HS505_00067B-20	4.5	U						9
1,1-Dichloroethane	10048456	HS505_00067B-20	4.7	U						10
cis-1,2-Dichloroethylene	10048456	HS505_00067B-20	4.5	U						11
Methyl ethyl ketone	10048456	HS505_00067B-20	49.0	U						12
Chloroform	10048456	HS505_00067B-20	4.6	U						13
1,1,1-Trichloroethane	10048456	HS505_00067B-20	31.0							14
Cyclohexane	10048456	HS505_00067B-20	4.4	U						15
Carbon tetrachloride	10048456	HS505_00067B-20	4.9	U						16
Benzene	10048456	HS505_00067B-20	4.5	U						17
1,2-Dichloroethane	10048456	HS505_00067B-20	4.7	U						18
Trichloroethylene	10048456	HS505_00067B-20	4.6	U						19
Butanol	10048456	HS505_00067B-20	55.0	U						20
Methyl isobutyl ketone	10048456	HS505_00067B-20	39.0	U						21
Toluene	10048456	HS505_00067B-20	4.1	U						22
Tetrachloroethylene	10048456	HS505_00067B-20	3.7	U						23
Chlorobenzene	10048456	HS505_00067B-20	4.2	U						24
Ethyl benzene	10048456	HS505_00067B-20	4.3	U						25
m&p-Xylene	10048456	HS505_00067B-20	3.8	U						26
o-Xylene	10048456	HS505_00067B-20	4.4	U						27
Bromoform	10048456	HS505_00067B-20	4.0	U						28
1,1,2,2-Tetrachloroethane	10048456	HS505_00067B-20	4.7	U						29
1,3,5-Trimethylbenzene	10048456	HS505_00067B-20	4.6	U						30
1,2,4-Trimethylbenzene	10048456	HS505_00067B-20	4.7	U						31
Chloromethane	10054134	HS505_00090B-09	5.2	U						1
Methanol	10054134	HS505_00090B-09	120.0							2
Ethyl ether	10054134	HS505_00090B-09	4.6	U						3
1,1-Dichloroethylene	10054134	HS505_00090B-09	19.0							4
1,1,2-Trichloro-1,2,2-trifluoroethane	10054134	HS505_00090B-09	4.7	U						5
Acetone	10054134	HS505_00090B-09	51.0	U						6
Carbon disulfide	10054134	HS505_00090B-09	5.0	U						7
Methylene chloride	10054134	HS505_00090B-09	4.6	U						8
trans-1,2-Dichloroethylene	10054134	HS505_00090B-09	8.5				J			9
1,1-Dichloroethane	10054134	HS505_00090B-09	430.0		D					10
cis-1,2-Dichloroethylene	10054134	HS505_00090B-09	4.5	U						11
Methyl ethyl ketone	10054134	HS505_00090B-09	49.0	U						12
Chloroform	10054134	HS505_00090B-09	4.6	U						13
1,1,1-Trichloroethane	10054134	HS505_00090B-09	630.0		D					14
Cyclohexane	10054134	HS505_00090B-09	4.4	U						15
Carbon tetrachloride	10054134	HS505_00090B-09	4.9	U						16
Benzene	10054134	HS505_00090B-09	4.5	U						17
1,2-Dichloroethane	10054134	HS505_00090B-09	4.7	U						18
Trichloroethylene	10054134	HS505_00090B-09	180.0							19
Butanol	10054134	HS505_00090B-09	55.0	U						20
Methyl isobutyl ketone	10054134	HS505_00090B-09	39.0	U						21
Toluene	10054134	HS505_00090B-09	4.1	U						22
Tetrachloroethylene	10054134	HS505_00090B-09	3.7	U						23
Chlorobenzene	10054134	HS505_00090B-09	4.2	U						24
Ethyl benzene	10054134	HS505_00090B-09	4.3	U						25
m&p-Xylene	10054134	HS505_00090B-09	3.8	U						26
o-Xylene	10054134	HS505_00090B-09	4.4	U						27
Bromoform	10054134	HS505_00090B-09	4.0	U						28
1,1,2,2-Tetrachloroethane	10054134	HS505_00090B-09	4.7	U						29
1,3,5-Trimethylbenzene	10054134	HS505_00090B-09	4.6	U						30
1,2,4-Trimethylbenzene	10054134	HS505_00090B-09	4.7	U						31
Chloromethane	10056040	HS505_00096B-16	5.2	U						1
Methanol	10056040	HS505_00096B-16	72.0	U						2

Analyte	Container	Sample no	Concentration (ppm)	U	D	Z	J	E	B	Analyte Order
Ethyl ether	10056040	HS505_00096B-16	4.6	U						3
1,1-Dichloroethylene	10056040	HS505_00096B-16	350.0		D					4
1,1,2-Trichloro-1,2,2-trifluoroethane	10056040	HS505_00096B-16	4.7	U						5
Acetone	10056040	HS505_00096B-16	51.0	U						6
Carbon disulfide	10056040	HS505_00096B-16	5.0	U						7
Methylene chloride	10056040	HS505_00096B-16	4.6	U						8
trans-1,2-Dichloroethylene	10056040	HS505_00096B-16	4.5	U						9
1,1-Dichloroethane	10056040	HS505_00096B-16	150.0							10
cis-1,2-Dichloroethylene	10056040	HS505_00096B-16	4.5	U						11
Methyl ethyl ketone	10056040	HS505_00096B-16	49.0	U						12
Chloroform	10056040	HS505_00096B-16	4.6	U						13
1,1,1-Trichloroethane	10056040	HS505_00096B-16	920.0		D					14
Cyclohexane	10056040	HS505_00096B-16	4.4	U						15
Carbon tetrachloride	10056040	HS505_00096B-16	4.9	U						16
Benzene	10056040	HS505_00096B-16	4.5	U						17
1,2-Dichloroethane	10056040	HS505_00096B-16	4.7	U						18
Trichloroethylene	10056040	HS505_00096B-16	78.0							19
Butanol	10056040	HS505_00096B-16	55.0	U						20
Methyl isobutyl ketone	10056040	HS505_00096B-16	39.0	U						21
Toluene	10056040	HS505_00096B-16	4.1	U						22
Tetrachloroethylene	10056040	HS505_00096B-16	3.7	U						23
Chlorobenzene	10056040	HS505_00096B-16	4.2	U						24
Ethyl benzene	10056040	HS505_00096B-16	4.3	U						25
m&p-Xylene	10056040	HS505_00096B-16	3.8	U						26
o-Xylene	10056040	HS505_00096B-16	4.4	U						27
Bromoform	10056040	HS505_00096B-16	4.0	U						28
1,1,2,2-Tetrachloroethane	10056040	HS505_00096B-16	4.7	U						29
1,3,5-Trimethylbenzene	10056040	HS505_00096B-16	4.6	U						30
1,2,4-Trimethylbenzene	10056040	HS505_00096B-16	4.7	U						31
Chloromethane	10058482	HS505_00090B-20	5.2	U						1
Methanol	10058482	HS505_00090B-20	72.0	U						2
Ethyl ether	10058482	HS505_00090B-20	4.6	U						3
1,1-Dichloroethylene	10058482	HS505_00090B-20	4.9	U						4
1,1,2-Trichloro-1,2,2-trifluoroethane	10058482	HS505_00090B-20	4.7	U						5
Acetone	10058482	HS505_00090B-20	51.0	U						6
Carbon disulfide	10058482	HS505_00090B-20	5.0	U						7
Methylene chloride	10058482	HS505_00090B-20	4.6	U						8
trans-1,2-Dichloroethylene	10058482	HS505_00090B-20	4.5	U						9
1,1-Dichloroethane	10058482	HS505_00090B-20	40.0							10
cis-1,2-Dichloroethylene	10058482	HS505_00090B-20	4.5	U						11
Methyl ethyl ketone	10058482	HS505_00090B-20	49.0	U						12
Chloroform	10058482	HS505_00090B-20	4.6	U						13
1,1,1-Trichloroethane	10058482	HS505_00090B-20	4.6	U						14
Cyclohexane	10058482	HS505_00090B-20	4.4	U						15
Carbon tetrachloride	10058482	HS505_00090B-20	4.9	U						16
Benzene	10058482	HS505_00090B-20	4.5	U						17
1,2-Dichloroethane	10058482	HS505_00090B-20	4.7	U						18
Trichloroethylene	10058482	HS505_00090B-20	16.0							19
Butanol	10058482	HS505_00090B-20	55.0	U						20
Methyl isobutyl ketone	10058482	HS505_00090B-20	39.0	U						21
Toluene	10058482	HS505_00090B-20	4.1	U						22
Tetrachloroethylene	10058482	HS505_00090B-20	3.7	U						23
Chlorobenzene	10058482	HS505_00090B-20	4.2	U						24
Ethyl benzene	10058482	HS505_00090B-20	4.3	U						25
m&p-Xylene	10058482	HS505_00090B-20	3.8	U						26
o-Xylene	10058482	HS505_00090B-20	4.4	U						27
Bromoform	10058482	HS505_00090B-20	4.0	U						28
1,1,2,2-Tetrachloroethane	10058482	HS505_00090B-20	4.7	U						29
1,3,5-Trimethylbenzene	10058482	HS505_00090B-20	4.6	U						30
1,2,4-Trimethylbenzene	10058482	HS505_00090B-20	4.7	U						31

BN004 - RECONCILIATION LOT BN004.01
SUMMARY OF TICS
DETECTED IN RECONCILIATION LOTS

Table 1. List of TICs in all BN161 Reconciliation Lots

Approval Sequence	Lot No.	Container ID	CAS Number	TIC	Concentration (ppmv)
1	BN004.00	10001239	000064-17-5	Ethanol	53.0
1	BN004.00	10001240	000064-17-5	Ethanol	53.0
1	BN004.00	10016843	000064-17-5	Ethanol	37.0
1	BN004.00	10001234	000064-17-5	Ethanol	30.0
1	BN004.00	10001318	000064-17-5	Ethanol	29.0
2	BN004.01	10048454	000592-41-6	1-Hexene	49.0
2	BN004.01	10031650	016136-84-8	1-Propene, 1-chloro-, (Z)-	40.0
2	BN004.01	10031650	000075-65-0	2-Propanol, 2-methyl-	100.0
2	BN004.01	10031990	000075-65-0	2-Propanol, 2-methyl-	90.0
2	BN004.01	10032261	000075-65-0	2-Propanol, 2-methyl-	83.0
2	BN004.01	10031944	000075-65-0	2-Propanol, 2-methyl-	80.0
2	BN004.01	10022859	000075-65-0	2-Propanol, 2-methyl-	63.0
2	BN004.01	10021237	000075-65-0	2-Propanol, 2-methyl-	62.0
2	BN004.01	10022339	000075-65-0	2-Propanol, 2-methyl-	57.0
2	BN004.01	10031810	000075-65-0	2-Propanol, 2-methyl-	55.0
2	BN004.01	10032196	000075-65-0	2-Propanol, 2-methyl-	46.0
2	BN004.01	10029038	000075-65-0	2-Propanol, 2-methyl-	42.0
2	BN004.01	10026005	000075-65-0	2-Propanol, 2-methyl-	40.0
2	BN004.01	10017194	000110-83-8	Cyclohexene	68.0
2	BN004.01	10016837	000556-67-2	Cyclotetrasiloxane, octamethyl-	25.0
2	BN004.01	10048454	000124-18-5	Decane	31.0
2	BN004.01	10016837	000107-46-0	Disiloxane, hexamethyl-	440.0
2	BN004.01	10031944	000064-17-5	Ethanol	210.0
2	BN004.01	10018868	000064-17-5	Ethanol	170.0
2	BN004.01	10026005	000064-17-5	Ethanol	65.0
2	BN004.01	10054134	000064-17-5	Ethanol	46.0
2	BN004.01	10058482	000064-17-5	Ethanol	35.0
2	BN004.01	10001229	000064-17-5	Ethanol	34.0
2	BN004.01	10031990	000064-17-5	Ethanol	29.0
2	BN004.01	10032024	000064-17-5	Ethanol	29.0
2	BN004.01	10058482	000142-82-5	Heptane	34.0
2	BN004.01	10022859	000067-63-0	Isopropyl Alcohol	1900.0
2	BN004.01	10048454	000067-63-0	Isopropyl Alcohol	48.0
2	BN004.01	10021811	000111-65-9	Octane	84.0
2	BN004.01	10032020	000111-65-9	Octane	82.0
2	BN004.01	10032261	000111-65-9	Octane	72.0
2	BN004.01	10020160	000111-65-9	Octane	64.0
2	BN004.01	10048449	000111-65-9	Octane	40.0
2	BN004.01	10048271	000111-65-9	Octane	35.0
2	BN004.01	10017162	000111-65-9	Octane	29.0
2	BN004.01	10022848	000111-65-9	Octane	29.0
2	BN004.01	10017194	000590-35-2	Pentane, 2,2-dimethyl-	97.0
2	BN004.01	10017194	000565-59-3	Pentane, 2,3-dimethyl-	57.0
2	BN004.01	10016837	000107-51-7	Trisiloxane, octamethyl-	33.0

BN004 - RECONCILIATION LOT BN004.01
SUMMARY OF TICS
DETECTED IN RECONCILIATION LOTS

Table 2. Summary of TICS By Reconciliation Lot and by Aggregate to be reported in the CIS

Lot No.	TICs Detected	Highest Conc each TIC in Lot (ppmv)	# Times Detected in Lot	Containers in Lot	% Detected in Lot	# Containers Reconciled to Date	Aggregate % Detected	Aggregate # of Times Detected
BN004.00	Ethanol	53.0	5	18	27.8%	18	27.8%	5
BN004.01	1-Hexene	49.0	1	100	1.0%	118	0.8%	1
	1-Propene, 1-chloro-, (Z)-	40.0	1	100	1.0%	118	0.8%	1
	2-Propanol, 2-methyl-	100.0	11	100	11.0%	118	9.3%	11
	Cyclohexene	68.0	1	100	1.0%	118	0.8%	1
	Cyclotetrasiloxane, octamethyl-	25.0	1	100	1.0%	118	0.8%	1
	Decane	31.0	1	100	1.0%	118	0.8%	1
	Disiloxane, hexamethyl-	440.0	1	100	1.0%	118	0.8%	1
	Ethanol	210.0	8	100	8.0%	118	11.0%	13
	Heptane	34.0	1	100	1.0%	118	0.8%	1
	Isopropyl Alcohol	1900.0	2	100	2.0%	118	1.7%	2
	Octane	84.0	8	100	8.0%	118	6.8%	8
	Pentane, 2,2-dimethyl-	87.0	1	100	1.0%	118	0.8%	1
	Pentane, 2,3-dimethyl-	57.0	1	100	1.0%	118	0.8%	1
	Trisiloxane, octamethyl-	33.0	1	100	1.0%	118	0.8%	1

BN004 - RECONCILIATION LOT BN004.01
SUMMARY OF TICS
DETECTED IN RECONCILIATION LOTS

Table 3. Summary of Aggregate TICs by Highest Concentration

TICs Detected	Highest Concentr each TIC (ppmv)	# Times Detected	% Detected
1-Hexene	49.0	1	0.8%
1-Propene, 1-chloro-, (Z)-	40.0	1	0.8%
2-Propanol, 2-methyl-	100.0	11	9.3%
Cyclohexane	68.0	1	0.8%
Cyclotetrasiloxane, octamethyl-	25.0	1	0.8%
Decane	31.0	1	0.8%
Disiloxane, hexamethyl-	440.0	1	0.8%
Ethanol	210.0	13	11.0%
Heptane	34.0	1	0.8%
Isopropyl Alcohol	1900.0	2	1.7%
Octane	84.0	8	6.8%
Pentane, 2,2-dimethyl-	97.0	1	0.8%
Pentane, 2,3-dimethyl-	57.0	1	0.8%
Trisiloxane, octamethyl-	33.0	1	0.8%

DIVIDER

PAGE

RECORD
B-2014-0126
SWALKER
05/27/2014

I certify by signature below that data of sufficient type, quality, and quantity are collected to meet WAP DQOs.

WSPF No.: BN004.25

Data Quality Objective	Yes	No	N/A	Comment
1. Have all containers in the lot been assigned the correct Waste Matrix Code?	☒	☐	☐	
2. Have waste material parameter weights been established for each container in the lot?	☒	☐	☐	
3. Does each waste container of waste contain transuranic (TRU) radioactive waste?	☒	☐	☐	
4. Does the waste stream exhibit a toxicity characteristic (TC) under 40 CFR Part 261, Subpart C?	☒	☐	☐	
5. Does the waste stream contain listed waste found in 20.4.1.200 NMAC incorporating 40 CFR, Part 261, Subpart D?	☒	☐	☐	
6. Can the waste stream be classified as hazardous or nonhazardous?	☒	☐	☐	
7. Have the overall completeness, comparability, and representativeness quality assurance objectives (QAOs) been met for each of the testing procedures as specified in MP-TRUW-8.2, Sections C3-2 and C3-3, for the lot?	☒	☐	☐	
8. Was an Open nonconformance report (NCR) search performed for all containers/pucks/source containers on the final list for the waste stream profile/reconciliation lot?	☒	☐	☐	

WSPF No.: BN004.25

Data Quality Objective	Yes	No	N/A	Comment
9. Was an Open NCR search performed for all batches in the final list for the waste stream profile/reconciliation lot?	☒	☐	☐	
10. Were all batches identified in the waste stream profile form (WSPF) or reconciliation lot complete through site project manager (SPM) signature release? List any batches identified as not complete through validation.	☒	☐	☐	
11. Were any open NCRs found that are applicable to the waste stream profile/reconciliation lot? List NCR, container, and batch.	☐	☒	☐	There are no open NCRs for any of the containers or batch data reports associated with the lot.
12. Is there an approved AK Sufficiency Determination for this waste stream?	☐	☒	☐	

Site Project Manager: Sean Caniff (Printed name) — Sean P. Caniff (Signature) — 05/27/2014 (Date)

2nd Site Project Manager: Nancy Kirk (Printed name) — Nancy Kirk (Signature) — 05/27/2014 (Date)

AMWTP Advanced Mixed Waste Treatment Project	Characterization Information Summary Report	Form-1598 Rev. 9 Effective: 06/12/13 Page 1 of 3

Implementing Document: MP-TRUW-8.14

WSPF Number: BN004 **Lot Number:** 25

SPM

Printed Name: **Sean Caniff** Signature: Sean P. Caniff Date: 05/27/2014

2nd SPM

Printed Name: **Nancy Kirk** Signature: Nancy Kirk Date: 05/27/2014

SPM signature indicates that the information presented in this package is consistent with batch data reports and indicates concurrence with all information presented in this report.

WSPF Number: BN004 **Lot Number:** 25

Characterization Information Summary

Characterization Description:

Reconciliation was performed on validated drum file containers obtained from waste stream BN004, Revision 0, Special Setups Waste from the Rocky Flats Environmental Technology Site (RFETS). This Reconciliation Lot BN004.25 consists of 8 containers of mixed transuranic waste. Each drum file was analyzed and all data were reconciled using MP-TRUW-8.11 and MP-TRUW-8.14 WIPP approved procedures.

The absence of prohibited items is determined and documented through acceptable knowledge and confirmation activities. Radiography or visual examination is performed on each container in this waste stream as a confirmation activity. See Table 1 for the associated RTR and Visual examinations. None of the listed containers contains prohibited items as defined by Section C-1c of the Advanced Mixed Waste Treatment Project Quality Assurance Project Plan (QAPjP), MP-TRUW-8.2.

WSPF Number: BN004 Lot Number: 25

Table 1. Correlation of Container Identification Numbers to Data Package.

Container No.	RTR Data Package	RA Data Package	VE Data Package
10018938	RTR04-00309	ASY13-03270	N/A
10090690	RTR06-00266	ASY06-01269	N/A
10102181	RTR06-00361	ASY06-01531	N/A
10200409	RTR08-00010	ASY08-00101	N/A
10207340	RTR08-00053	ASY09-01819	N/A
10207672	RTR14-00067	ASY14-00724	N/A
10241045	RTR14-00067	ASY08-01620	N/A
10002718	RTR14-00067	ASY04-00614	N/A

NOTE: *Footnotes will be added as applicable.*

Table C6-3 Radiography Checklist
AMWTP Recertification Audit A-15-01
October 7 – 9, 2014

(This page intentionally blank)

Radiography Checklist

	WAP Requirement[1] AMWTP Audit A-15-01 Table C6-3 Radiography Checklist	Procedure Documented		Example of Implementation/ Objective Evidence, as applicable		Comment (e.g., any change in procedure since last audit, etc.)
		Location	Adequate? Y/N (Why)	Item Reviewed	Adequate? Y/N	
	QUALITY ASSURANCE OBJECTIVES					
233	Are process procedures in place to meet the following Quality Assurance Objectives? <u>Precision</u> • Does the site describe in its QAPjP and SOP(s) activities to reconcile any discrepancies between two radiography operators with regard to identification of the waste matrix code, liquids in excess of TSDF-WAC limits, and compressed gases through independent replicate scans and independent observations? And additionally, activities to verify the precision of radiography prior to use by tuning precisely enough to demonstrate compliance with QAOs through viewing an image test pattern? <u>Accuracy</u> • Was accuracy obtained by using a target to tune the image for maximum sharpness and by requiring operators to successfully identify 100 percent of the required items in a training container during their initial qualification and subsequent requalification	MP-TRUW-8.8 S. 3.1.3.13	Y	RTR BDRs: RTR13-00241 RTR13-00280 RTR13-00324 RTR14-00018 RTR14-00037 RTR14-00233 **(RTR-1)** Qualification records for two RTR operators **(RTR-2)**	Y	
233a	<u>Completeness</u> • Was an audio/videotape (or equivalent media) of the radiography examination and a radiography data form validated according to the requirements in Section C3-4? • Was an audio/videotape (or equivalent media) of the radiography examination and a radiography data form obtained for 100% of the waste containers subject to radiography? <u>Comparability</u> • Is comparability ensured through the use of standardized radiography procedures and operator training and qualifications (Section C3-2a)	MP-TRUW-8.8 S. 3.1.3.13	Y	RTR BDRs: RTR13-00241 RTR13-00280 RTR13-00324 RTR14-00018 RTR14-00037 RTR14-00233 **(RTR-1)** Qualification records for two RTR operators **(RTR-2)**	Y	

	WAP Requirement[1] AMWTP Audit A-15-01 Table C6-3 Radiography Checklist	Procedure Documented		Example of Implementation/ Objective Evidence, as applicable		Comment (e.g., any change in procedure since last audit, etc.)
		Location	Adequate? Y/N (Why)	Item Reviewed	Adequate? Y/N	
	CHARACTERIZATION AND SYSTEM REQUIREMENTS					
234	Does the site have procedures to ensure that radiography is used to identify and verify waste container contents and verify the waste's physical form? Does the site have procedures to identify prohibited materials? (Section C-3b; C1-1)	INST-OI-12 S. 4.6 & Exhibit 5	Y	RTR BDRs: RTR13-00241 RTR13-00280 RTR13-00324 RTR14-00018 RTR14-00037 RTR14-00233 **(RTR-1)**	Y	
235	Do procedures or other supporting documentation ensure that every waste container will undergo radiography and/or VE as necessary to augment AK? (Section C-3b)	MP-TRUW-8.9 S. 1.0 & 2.0	Y	RTR13-00242 RTR13-00305 RTR14-00005 RTR14-00086 **(GEN-1)** VEB13-00526 VEB14-00003 VEB14-00162 VEB14-00254 VNC14-00022 **(GEN-2)** Acceptable Knowledge Document Review Summary P609A, Rev. 7, BN004 Special Set-ups Waste Stream Profile Package with Waste Stream Profile Form BN004, Rev. 0 and Characterization Information Summary (CIS) and AK Source Document Review Summary P2002A Rev. 1, BN510.3 Waste Stream Profile Package for Super Compactor Debris Waste with CIS Lot 1 and AK Summary. **(GEN-3)**	Y	

	WAP Requirement[1] AMWTP Audit A-15-01 Table C6-3 Radiography Checklist	Procedure Documented		Example of Implementation/ Objective Evidence, as applicable		Comment (e.g., any change in procedure since last audit, etc.)
		Location	Adequate? Y/N (Why)	Item Reviewed	Adequate? Y/N	
236	Do procedures ensure that containers whose contents prevent full examination are examined by visual examination rather than by radiography unless the site certifies that visual examination would provide no additional relevant information for that container based on the AK information for the waste stream? (Section C1-1)	INST-OI-12 S. 4.6.37 & Associated Notes	Y	RTR BDRs: RTR13-00241 RTR13-00280 RTR13-00324 RTR14-00018 RTR14-00037 RTR14-00233 **(RTR-1)**	Y	
237	Do procedures or other supporting documentation ensure that the physical form determined by radiography is compared with the waste stream descriptions? If discrepancies are noted, will a new waste stream be identified? (Section C-3b)	INST-OI-12 S. 4.6 MP-TRUW-8.9 S. 1.0 MP-TRUW-8.13 S. 3.7 & 3.8	Y	RTR BDRs: RTR13-00241 RTR13-00280 RTR13-00324 RTR14-00018 RTR14-00037 RTR14-00233 **(RTR-1)** RTR13-00242 RTR13-00305 RTR14-00005 RTR14-00086 **(GEN-1)** Acceptable Knowledge Document Review Summary P609A, Rev. 7, BN004 Special Set-ups Waste Stream Profile Package with Waste Stream Profile Form BN004, Rev. 0 and Characterization Information Summary (CIS) and AK Source Document Review Summary P2002A Rev. 1, BN510.3 Waste Stream Profile Package for Super Compactor Debris Waste with CIS Lot 1 and AK Summary. **(GEN-3)**	Y	No discrepancies were noted so that a new waste stream would be identified.

	WAP Requirement[1] AMWTP Audit A-15-01 Table C6-3 Radiography Checklist	Procedure Documented		Example of Implementation/ Objective Evidence, as applicable		Comment (e.g., any change in procedure since last audit, etc.)
		Location	Adequate? Y/N (Why)	Item Reviewed	Adequate? Y/N	
238	Are there procedures to ensure the data is obtained from an audio/video recorded scan provided by trained radiography operators? (Section C1-1)	INST-OI-12 S. 3.2.1, 4.6 Note 2	Y	RTR BDRs: RTR13-00241 RTR13-00280 RTR13-00324 RTR14-00018 RTR14-00037 RTR14-00233 **(RTR-1)**	Y	
239	Were all activities required to achieve the radiography objective described in site Quality Assurance Project Plans (QAPjPs) and Standard Operating Procedures (SOPs)? (Section C3-2)	INST-OI-12 (All)	Y	RTR BDRs: RTR13-00241 RTR13-00280 RTR13-00324 RTR14-00018 RTR14-00037 RTR14-00233 **(RTR-1)**	Y	
240	Did the radiography system consist of the following equipment or equivalent: • an X-ray producing device? • an imaging system? • an enclosure for radiation protection? • a waste container handling system? • an audio/video recording system or equivalent? • an operator control and data acquisition station? (Section C1-1)	INST-OI-12 (All) MP-TRUW-8.1 Appendix F S. F.1	Y	RTR BDRs: RTR13-00241 RTR13-00280 RTR13-00324 RTR14-00018 RTR14-00037 RTR14-00233 **(RTR-1)**	Y	
241	Did the X-ray producing device have controls which allow the operator to vary voltage, thereby controlling image quality? Was it possible to vary the voltage, typically between 150-400 kV, to provide an optimum degree of penetration through the waste? Was high-density material examined with the X-ray device set on the maximum voltage? Was low-density material examined at lower voltage settings to improve contrast and image definition? (Section C1-1)	INST-OI-12 S. 4.5.3 MP-TRUW-8.1 Appendix F S. F.1	Y	RTR BDRs: RTR13-00241 RTR13-00280 RTR13-00324 RTR14-00018 RTR14-00037 RTR14-00233 **(RTR-1)**	Y	
242	Do procedures or other documentation ensure that an audio/videotape or equivalent is made of the waste container scan and maintained as a non-permanent record? (Section C1-1)	INST-OI-12 S. 7.0	Y	RTR BDRs: RTR13-00241 RTR13-00280 RTR13-00324 RTR14-00018 RTR14-00037 RTR14-00233 **(RTR-1)**	Y	

	WAP Requirement[1] AMWTP Audit A-15-01 Table C6-3 Radiography Checklist	Procedure Documented		Example of Implementation/ Objective Evidence, as applicable		Comment (e.g., any change in procedure since last audit, etc.)
		Location	Adequate? Y/N (Why)	Item Reviewed	Adequate? Y/N	
	DATA COMPILATION					
243	Are there procedures to ensure that a radiography data form is used to document the waste matrix code, ensure the waste container contains no ignitable, corrosive or reactive waste by documenting the absence of liquid in excess of TSDF-WAC limits or compressed gases, and verify that the physical form of the waste is consistent with the waste stream description documented on the WSPF? (Section C1-1)	INST-OI-12 (All)	Y	RTR BDRs: RTR13-00241 RTR13-00280 RTR13-00324 RTR14-00018 RTR14-00037 RTR14-00233 **(RTR-1)**	Y	
245	If radiography indicates that the waste does not match the waste stream description, do procedures ensure that the appropriate corrective action was taken? (Section C-3b)	INST-OI-12 S. 4.6.32	Y	RTR BDRs: RTR13-00241 RTR13-00280 RTR13-00324 RTR14-00018 RTR14-00037 RTR14-00233 **(RTR-1)**	Y	
246	If a discrepancy is noted, do procedures ensure that the proper waste stream assignment is determined, the correct hazardous waste numbers assigned, and the resolution documented? (Section C-3b)	MP-TRUW- 8.13 S. 3.7 & 6.0 (Form 1070)	Y	AK Discrepancy Resolutions from Characterization and AK Reevaluations **(AK-12)**	Y	
	TRAINING					
247	Do site procedures ensure that only trained personnel are allowed to operate radiography equipment? (Section C1-1)	MP-TRUW-8.1 Appendix F, S. F2 INST-OI-12 S. 3.2.1	Y	Qualification records for two RTR operators **(RTR-2)**	Y	
248	Do site procedures ensure that training requirements for radiography operators is based upon existing industry standard training requirements? (Section C1-1)	MP-TRUW-8.1 Appendix F, S. F2	Y	Qualification records for two RTR operators **(RTR-2)**	Y	
249	Does the documented training program provide radiography operators with both formal and on-the-job training (OJT)? (Section C1-1)	MP-TRUW-8.1 Appendix F, S. F2	Y	Qualification records for two RTR operators **(RTR-2)**	Y	

	WAP Requirement[1] AMWTP Audit A-15-01 Table C6-3 Radiography Checklist	Procedure Documented		Example of Implementation/ Objective Evidence, as applicable		Comment (e.g., any change in procedure since last audit, etc.)
		Location	Adequate? Y/N (Why)	Item Reviewed	Adequate? Y/N	
250	Does the documented training program ensure that the radiography operators are instructed in the specific waste generating practices and typical packaging configurations expected to be found in each waste stream at the site? (Section C1-1)	MP-TRUW-8.1 Appendix F, S. F2	Y	Qualification records for two RTR operators **(RTR-2)**	Y	
251	Does the documented training program ensure that the OJT and apprenticeship are conducted by an experienced, qualified radiography operator prior to qualification of the candidate? (Section C1-1)	MP-TRUW-8.1 Appendix F, S. F2	Y	Qualification records for two RTR operators **(RTR-2)**	Y	
252	Is the documented training program site specific? (Section C1-1)	MP-TRUW-8.1 Appendix F, S. F2	Y	Qualification records for two RTR operators **(RTR-2)**	Y	
262	Does the documented training program ensure that a training drum with various container sizes is scanned by each operator on a semiannual basis? Is the videotape reviewed by a supervisor to ensure that operator's interpretations remain consistent and accurate? (Section C1-1)	MP-TRUW-8.1 Appendix F, S. F2	Y	Qualification records for two RTR operators **(RTR-2)**	Y	
263	Do site procedures ensure that the site prepares Testing Batch Data Reports or equivalent which includes all data pertaining to radiography for up to 20 waste containers without regard to waste matrix? (Section C3-4)	MP-TRUW-8.8 S. 3.1.3.2 & 3.1.3.3	Y	RTR BDRs: RTR13-00241 RTR13-00280 RTR13-00324 RTR14-00018 RTR14-00037 RTR14-00233 **(RTR-1)**	Y	
	QUALITY ASSURANCE					
265	Does the documented training program ensure that the imaging system characteristics are verified on a routine basis? (Section C1-1)	MP-TRUW-8.1 Appendix F, S. F.2 INST-OI-12, S. 4.2 Note, 4.3, & 4.6.9 Note	Y	RTR BDRs: RTR13-00241 RTR13-00280 RTR13-00324 RTR14-00018 RTR14-00037 RTR14-00233 **(RTR-1)** Qualification records for two RTR operators **(RTR-2)**	Y	

	WAP Requirement[1] AMWTP Audit A-15-01 Table C6-3 Radiography Checklist	Procedure Documented		Example of Implementation/ Objective Evidence, as applicable		Comment (e.g., any change in procedure since last audit, etc.)
		Location	Adequate? Y/N (Why)	Item Reviewed	Adequate? Y/N	
266	Do procedures ensure that independent replicate scans and replicate observations of the video output of the radiography process are performed under uniform conditions and procedures? Are independent replicate scans performed on one waste container per day or per testing batch of 20 samples, which ever is less frequent, by a qualified radiography operator that was not involved in the original scan of the water container? Are independent observations of one scan (not the replicate scan) performed once per day or per testing batch, which ever is less frequent, by a qualified radiography operator that was not involved in the original scan of the waste container? (Section C1-1)	MP-TRUW-8.8 S. 3.1 INST-OI-12 S. 4.6	Y	RTR BDRs: RTR13-00241 RTR13-00280 RTR13-00324 RTR14-00018 RTR14-00037 RTR14-00233 **(RTR-1)**	Y	
267	Do procedures ensure that oversight functions include periodic audio/video media reviews of accepted waste containers, are performed by qualified radiography operators that were not involved in the original scans of the waste containers? (Section C1-1)	MP-TRUW-8.8 S. 3.1 INST-OI-12 S. 4.6.15	Y	RTR BDRs: RTR13-00241 RTR13-00280 RTR13-00324 RTR14-00018 RTR14-00037 RTR14-00233 **(RTR-1)**	Y	
268	Is the site project manager responsible for monitoring the quality of the radiography data and calling for corrective action, when necessary? (Section C1-1)	MP-TRUW-8.9 S. 2.0 & 3.1.7 thru 3.1.14	Y	RTR13-00242 RTR13-00305 RTR14-00005 RTR14-00086 **(GEN-1)**	Y	
	DATA VALIDATION, REVIEW, VERIFICATION AND REPORTING					
277	Do procedures ensure that all applicable data generation review verification and validation activities specified in C3-4 are followed, including all signatory releases? (Section C3-4)	MP-TRUW-8.8 S. 3.1	Y	RTR BDRs: RTR13-00241 RTR13-00280 RTR13-00324 RTR14-00018 RTR14-00037 RTR14-00233 **(RTR-1)**	Y	
278	Do procedures ensure that radiography tapes have been reviewed at a frequency of one waste container per day or once per testing batch, whichever is less frequent, to ensure data are correct and completed? (Section C1-1)	MP-TRUW-8.8 S. 3.1 INST-OI-12 S. 4.6.15	Y	RTR BDRs: RTR13-00241 RTR13-00280 RTR13-00324 RTR14-00018 RTR14-00037 RTR14-00233 **(RTR-1)**	Y	

	WAP Requirement[1] AMWTP Audit A-15-01 Table C6-3 Radiography Checklist	Procedure Documented		Example of Implementation/ Objective Evidence, as applicable		Comment (e.g., any change in procedure since last audit, etc.)
		Location	Adequate? Y/N (Why)	Item Reviewed	Adequate? Y/N	
279	Do procedures ensure that all applicable project-level signatory releases and DQOs (Section C3-3) as specified in the WAP are performed? (Section C3-4b)	MP-TRUW-8.9 S. 3.1.5 & 3.1.15.4	Y	RTR13-00242 RTR13-00305 RTR14-00005 RTR14-00086 **(GEN-1)**	Y	
282	At the data generation level, do procedures ensure that all electronic and video data stored appropriately to ensure that waste container, sample, and associated QA data are readily retrievable? Are radiography tapes reviewed, at a frequency of one waste container per day or once per testing batch, whichever is less frequent, against the data reported on the radiography form? (Section C3-4a, C3-4a(1))	MP-TRUW-8.8 S. 3.1 INST-OI-12 S. 4.5 & 4.6	Y	RTR BDRs: RTR13-00241 RTR13-00280 RTR13-00324 RTR14-00018 RTR14-00037 RTR14-00233 **(RTR-1)**	Y	
283	At the project level, do procedures require the Site Project Manager to certify that the radiography data are complete and acceptable based on the videotape review of at least one waste container per testing batch or daily, whichever is less frequent? (Section C3-4b(1))	MP-TRUW-8.9 S. 3.1, 3.2, 4.0 & 6.0	Y	RTR13-00242 RTR13-00305 RTR14-00005 RTR14-00086 **(GEN-1)**	Y	

1. The WAP requirements should be presented in documents, such as procedures. Each of the questions posed under WAP requirements is meant to ask whether procedures are in place or whether documents are evident which demonstrate that the specific WAP requirement is or can be met.

AMWTP
Advanced Mixed Waste Treatment Project

AMWTP

Batch Report Coversheet

Date: 11-Sep-2014

Time: 05:55

RTR1

Batch Type Real Time Radiography
Batch Report No. RTR13-00241
Batch Id RTR13-00241
Open Date 12-OCT-13 09:14:10
Close Date 13-OCT-13 17:29:42
Batch Status AP
Test Facility Idaho AMWTP
Equipment Id Z-213-106 RTR Station Right (213-106)

Container Id	IDC	Analysis Id	Date Examined	QC Type	Analysis Status	Operator
10044027	AW-164	0000092417	12-OCT-13 09:14:10	Original	P	FRANK KUCK
10235070	RF-330	0000092419	12-OCT-13 09:32:47	Original	P	FRANK KUCK
10230893	RF-336	0000092422	12-OCT-13 11:00:04	Original	P	DEREK COX
10328793	RF-960	0000092423	12-OCT-13 11:17:02	Original	P	KRISANN HUGHES
10002661	RF-337	0000092425	12-OCT-13 12:05:54	Original	NR	FRANK KUCK
10241097	RF-337	0000092426	12-OCT-13 13:51:25	Original	P	FRANK KUCK
10330338	RF-960	0000092428	12-OCT-13 14:06:32	Original	P	FRANK KUCK
10187866	RF-336	0000092430	12-OCT-13 14:24:46	Original	P	FRANK KUCK
10416151	RF-003	0000092433	12-OCT-13 15:23:06	Original	P	FRANK KUCK
10244302	RF-337	0000092434	12-OCT-13 15:40:07	Original	P	FRANK KUCK
10328375	RF-330	0000092435	12-OCT-13 16:41:38	Original	P	FRANK KUCK
10229567	RF-960	0000092437	12-OCT-13 16:57:41	Original	P	DIANNA MOORE
10328375	RF-330	0000092439	12-OCT-13 17:25:36	Replicate / Duplicate	P	AARON ATWELL
10342255	RF-750	0000092444	13-OCT-13 10:45:42	Original	P	DIANNA MOORE
10242835	RF-337	0000092446	13-OCT-13 11:13:55	Original	P	DIANNA MOORE
10320974	RF-750	0000092448	13-OCT-13 11:49:01	Original	P	DIANNA MOORE
10181587	RF-960	0000092451	13-OCT-13 13:35:59	Original	P	KRISANN HUGHES
10342255	RF-750	0000092452	13-OCT-13 14:21:06	RTR OIO	P	CONLEY BEEBE
10000028	RF-376	0000092455	13-OCT-13 15:27:10	Original	P	CONLEY BEEBE
10027359	AW-160	0000092459	13-OCT-13 16:20:11	Original	P	CONLEY BEEBE
10011694	AW-160	0000092460	13-OCT-13 16:47:46	Original	P	CONLEY BEEBE
10330018	RF-330	0000092463	13-OCT-13 17:28:42	Original	P	CONLEY BEEBE

INFORMATION ONLY

**********Batch Comments**********

Written By	Date	Comment
STALLMAN	29-OCT-13 07:04:43	Esigned.
CHINKLE	29-OCT-13 13:21:44	29-OCT-13 CHINKLE AKE This batch is returned for rework. AK does not concur with the recommended IDC change for container 10229567. CHD 10/29/13
DMOORE	31-OCT-13 13:36:40	rework completed
CHINKLE	05-NOV-13 05:41:46	29-OCT-13 CHINKLE AKE This batch is returned for rework. AK does not concur with the recommended IDC change for container 10229567. CHD 10/29/13 05-NOV-13 CHINKLE AKE Batch is promoted. chd 11/5/13
MSORENSON	08-NOV-13 11:36:09	This batch is being validated electronically per MP-TRUW-8.8.
MSORENSON	08-NOV-13 11:36:53	Information only- There was a spike (sudden drop/return to normal) in the 634 temperature chart on 10/09/13 which is an anomalous condition. All temperature requirements have been met and there is no impact to RTR.
MSORENSON	08-NOV-13 13:19:19	Information only- Container 10230893 has the characterizations SS name in the E-Sign history. The operator on a different shift entered an incorrect recording Id which required the characterization SS to correct the recording Id under supervision of an RTR SME to facilitate closure of the batch. No other data was changed.
MSORENSON	09-NOV-13 09:09:00	Information only- Container 10416151. The operator added a drum bag to waste items by weight and identified it on the A/V recording as not closed. Therefore the layers of confinement and closure method appear to be correct. No rework will be necessary on this container.
MSORENSON	09-NOV-13 09:09:00	Rework containers 10328793 and 10181587. After review of the A/V recordings. The waste appears to have been penetrated sufficiently to verify it contents and the absence of prohibited items. Please answer impenetrable dense objects No and ensure comment has been removed. NCRs 81226 and 81244 has been recommended closed.
MSORENSON	09-NOV-13 09:12:02	Demote to operations for rework.
KHUGHES	09-NOV-13 10:13:05	completed rework
MSORENSON	09-NOV-13 11:53:51	Rework appears to have been completed satisfactorily. Promote to SPM.
DMARQUARDT	11-NOV-13 14:53:57	Reviewed and validated. Approve.

**********Batch E-Signature History**********

Approval ID	User ID	Signature Date	Comment
2645894	STALLMAN	29-OCT-2013 07:04:44	
2647582	DMOORE	31-OCT-2013 13:36:40	rework completed
2651777	MSORENSON	09-NOV-2013 09:12:02	Demote to operations for rework.
2651806	KHUGHES	09-NOV-2013 10:13:05	completed rework
2651851	MSORENSON	09-NOV-2013 11:53:51	Rework appears to have been completed satisfactorily. Promote to SPM.
2652559	DMARQUARDT	11-NOV-2013 14:53:57	Reviewed and validated. Approve.

***** End of Batch Report Coversheet Report *****

AMWTP
Advanced Mixed Waste Treatment Project

AMWTP

Non-Conformance Report

Date: 11-Sep-2014

Time: 05:55

*****Batch NCR(s)*****

Batch Type	RTR	Batch ID	RTR13-00241

Trackwise Number	Status	Opened Date	Closed Date

*****Container NCR(s)*****

Container ID *or related Batch ID*	Trackwise Number	Status	Opened Date	Closed Date
10000028	40536	CLOSED	01-AUG-08	08-SEP-08
10235070	74042	CLOSED	08-DEC-12	18-NOV-13
10002661	81228	CLOSED	12-OCT-13	10-APR-14
10002661	82192	CLOSED	17-NOV-13	10-APR-14
10002661	9398	CLOSED	24-AUG-04	01-JUN-06
10044027	80181	CLOSED	27-AUG-13	14-NOV-13
10181587	81244	CLOSED	13-OCT-13	19-NOV-13
10229567	81871	CLOSED	04-NOV-13	18-NOV-13
10244302	81233	CLOSED	12-OCT-13	14-NOV-13
10320974	81243	CLOSED	13-OCT-13	26-MAR-14
10328793	81226	CLOSED	12-OCT-13	19-NOV-13
10330338	81230	OPEN	12-OCT-13	
10342255	81239	CLOSED	13-OCT-13	20-MAR-14
10416151	81232	CLOSED	12-OCT-13	08-MAY-14
10011694	33668	CLOSED	14-AUG-07	14-NOV-13
10027359	33669	CLOSED	14-AUG-07	19-NOV-13
10416151	74186	CLOSED	11-DEC-12	08-MAY-14

*****End of Non-Conformance Report*****

AMWTP
Advanced Mixed Waste Treatment Project

AMWTP

Checklist Report

Date: 11-Sep-2014

Time: 05:55

Batch Id RTR13-00241 **Open Date** 12-OCT-13 **Close Date** 13-OCT-13

Reviewer MARK SORENSON **Approval Level** Independent Technical Reviewer

Approval Date 09-NOV-13 **Review Iteration** 1

Question Text	Answer	Requirement	Comment
1. Is the Batch Data Report (BDR) and Quality Assurance (QA) documentation complete with the following: o Real-Time Radiography (RTR) Batch Coversheet o Table of Contents (manual review only) o RTR Analysis reports o Replicate Scan o Replicate Comparison o Independent Observation o ITR checklist (Form-1412, manual review only) o Form-1491, Batch Data Report Supplemental Comment Form (manual review only) o Associated NCRs (referenced in Waste Tracking System [WTS]) o Audio/Video Recording References?	Yes		
2. Are there 20 containers or less in the batch?	Yes		
3. Was the image quality indicator (IQI) satisfactory?	Yes		
4. Does every container in the batch reference an audio/video recording?	Yes		
5. Is there a completed radiography data analysis for each container in the batch?	Yes		
6. Was each RTR Operator qualified at the time of the radiography event?	Yes		
7. Was the data generated in a technically correct manner using the correct revision of INST-OI-12, Real-Time Radiography Operations (Drum)?	Yes		
8. Was the correct procedure and revision documented on all analysis reports?	Yes		
9. Has the E-signature History review been performed?	Yes		
10. Does the RTR operator confirm that the physical form matched the waste stream description and waste matrix code?	Yes		
11. Does the packaging weight plus the net weight equal the gross weight of the container in the estimated waste material parameters?	Yes		
12. Were all entries into the waste material items section assigned to the correct waste material parameters?	Yes		
13. Has the description of rigid liners and layers of confinement been properly documented, as applicable?	Yes		
14. Was the presence or absence of prohibited items properly documented?	Yes		
15. If prohibited items were identified, have appropriate nonconformance reports (NCRs) been generated?	Yes		
16. Were the containers examined between October and April in compliance with the preheat requirements?	Yes		There was a spike (sudden drop/return to normal) in the 634 temperature chart on 10/09/13 which is an anomalous condition. All temperature requirements have been met and there is no impact to RTR.
17. Were all proper units and significant figures used for all reported volumes/weights?	Yes		
18. Was there a valid replicate scan performed (at least one container per day, or once per testing batch, whichever is less frequent)? o Record the container number, the replicate observation date in the comment section of this checklist. o Record any issues or concerns in the batch comment section.	Yes		The Replicate exam was performed by a qualified operator on drum # 10328375 on 10/12/2013. There were minor differences in fill factor estimates and in the items added by weight and by volume. I agree with the original operator. These differences do not affect the DQO's or disposition of the container.

Batch Id RTR13-00241 **Open Date** 12-OCT-13 **Close Date** 13-OCT-13

Reviewer MARK SORENSON **Approval Level** Independent Technical Reviewer

Approval Date 09-NOV-13 **Review Iteration** 1

Question Text	Answer	Requirement	Comment
19. Was there a valid Operator Independent Observation (OIO) (not the replicate) performed (at least one container per day, or once per testing batch, whichever is less frequent)? o Record the container number and the OIO date in the comment section of this checklist. o Record any issues or concerns in the batch comment section.	Yes		The OIO was performed by a qualified operator on drum # 10342255 on 10/13/2013. There were minor differences in fill factor estimates and items added under waste items by weight. The OIO operator also identified the waste as impenetrable on his WTS data form. I agree with the Original operator the waste was penetrated sufficiently to verify it contents and the absence of unidentified prohibited items. These differences do not affect the DQOs or disposition of the container.
20. Were any significant differences identified that would affect the original disposition of the replicate and OIO, or affect data quality objectives (DQOs)? If so, ensure an NCR was generated and WTS flagged.	No		
21. Were the RTR quality assurance objectives (QAOs) met? o Precision o Accuracy o Completeness o Comparability	Yes		
22. Were any NCRs generated for containers containing prohibited items, or any non-conforming conditions that failed to meet DQOs or QAOs? o If so, include the NCRs, as appropriate, in the BDR.	Yes		
23. Were the rework requirements clearly identified in WTS or on the BDR?	Yes		See batch comments

Batch Id RTR13-00241 **Open Date** 12-OCT-13 **Close Date** 13-OCT-13

Reviewer MARK SORENSON **Approval Level** Independent Technical Reviewer
Approval Date 09-NOV-13 **Review Iteration** 2

Question Text	Answer	Requirement	Comment
1. Is the Batch Data Report (BDR) and Quality Assurance (QA) documentation complete with the following: o Real-Time Radiography (RTR) Batch Coversheet o Table of Contents (manual review only) o RTR Analysis reports o Replicate Scan o Replicate Comparison o Independent Observation o ITR checklist (Form-1412, manual review only) o Form-1491, Batch Data Report Supplemental Comment Form (manual review only) o Associated NCRs (referenced in Waste Tracking System [WTS]) o Audio/Video Recording References?	Yes		
2. Are there 20 containers or less in the batch?	Yes		
3. Was the image quality indicator (IQI) satisfactory?	Yes		
4. Does every container in the batch reference an audio/video recording?	Yes		
5. Is there a completed radiography data analysis for each container in the batch?	Yes		
6. Was each RTR Operator qualified at the time of the radiography event?	Yes		
7. Was the data generated in a technically correct manner using the correct revision of INST-OI-12, Real-Time Radiography Operations (Drum)?	Yes		
8. Was the correct procedure and revision documented on all analysis reports?	Yes		
9. Has the E-signature History review been performed?	Yes		
10. Does the RTR operator confirm that the physical form matched the waste stream description and waste matrix code?	Yes		
11. Does the packaging weight plus the net weight equal the gross weight of the container in the estimated waste material parameters?	Yes		
12. Were all entries into the waste material items section assigned to the correct waste material parameters?	Yes		
13. Has the description of rigid liners and layers of confinement been properly documented, as applicable?	Yes		
14. Was the presence or absence of prohibited items properly documented?	Yes		
15. If prohibited items were identified, have appropriate nonconformance reports (NCRs) been generated?	Yes		
16. Were the containers examined between October and April in compliance with the preheat requirements?	Yes		There was a spike (sudden drop/return to normal) in the 634 temperature chart on 10/09/13 which is an anomalous condition. All temperature requirements have been met and there is no impact to RTR.
17. Were all proper units and significant figures used for all reported volumes/weights?	Yes		
18. Was there a valid replicate scan performed (at least one container per day, or once per testing batch, whichever is less frequent)? o Record the container number, the replicate observation date in the comment section of this checklist. o Record any issues or concerns in the batch comment section.	Yes		The Replicate exam was performed by a qualified operator on drum # 10328375 on 10/12/2013. There were minor differences in fill factor estimates and in the items added by weight and by volume. I agree with the original operator. These differences do not affect the DQO's or disposition of the container.

Batch Id RTR13-00241 **Open Date** 12-OCT-13 **Close Date** 13-OCT-13

Reviewer MARK SORENSON **Approval Level** Independent Technical Reviewer

Approval Date 09-NOV-13 **Review Iteration** 2

Question Text	Answer	Requirement	Comment
19. Was there a valid Operator Independent Observation (OIO) (not the replicate) performed (at least one container per day, or once per testing batch, whichever is less frequent)? o Record the container number and the OIO date in the comment section of this checklist. o Record any issues or concerns in the batch comment section.	Yes		The OIO was performed by a qualified operator on drum # 10342255 on 10/13/2013. There were minor differences in fill factor estimates and items added under waste items by weight. The OIO operator also identified the waste as impenetrable on his WTS data form. I agree with the Original operator the waste was penetrated sufficiently to verify it contents and the absence of unidentified prohibited items. These differences do not affect the DQOs or disposition of the container.
20. Were any significant differences identified that would affect the original disposition of the replicate and OIO, or affect data quality objectives (DQOs)? If so, ensure an NCR was generated and WTS flagged.	No		
21. Were the RTR quality assurance objectives (QAOs) met? o Precision o Accuracy o Completeness o Comparability	Yes		
22. Were any NCRs generated for containers containing prohibited items, or any non-conforming conditions that failed to meet DQOs or QAOs? o If so, include the NCRs, as appropriate, in the BDR.	Yes		
23. Were the rework requirements clearly identified in WTS or on the BDR?	Yes		See batch comments

Batch Id RTR13-00241 **Open Date** 12-OCT-13 **Close Date** 13-OCT-13

Reviewer DAVE MARQUARDT **Approval Level** SPM Data Validation

Approval Date 11-NOV-13 **Review Iteration** 1

Question Text	Answer	Requirement	Comment
(1) Has the batch received a Data Generation Level Independent Technical Review?	Yes	MP-TRUW-8.2, C3-10b(1)	
(2) Is the Independent Technical Review checklist complete?	Yes	MP-TRUW-8.2, C3-10b(1)	
(3) When identified, were polychlorinated biphenyls (PCBs), mercury, lead, or other hazardous contaminants consistent with the waste stream acceptable knowledge (AK) Summary Report(s) and/or AK documentation?	Yes	MP-TRUW-8.2, C4-3	
(4) Are any ignitable, corrosive, or reactive wastes identified in this waste?	No	MP-TRUW-8.2, C4-3	
(5) Are the packaging configurations identified on the real-time radiography (RTR) consistent with the waste stream AK Summary Report(s) and/or AK documentation?	Yes	MP-TRUW-8.2, C4-3	
(6) Do the containers in this batch contain typical waste items consistent with waste stream AK Summary Report(s) and/or AK documentation?	Yes	MP-TRUW-8.2, C4-3	
(7) Are the Waste Matrix Codes (WMCs) and physical form descriptions consistent with AK?	Yes	MP-TRUW-8.2, C4-3	
(8) Have all AK discrepancies been resolved and have all AK Resolution checklists been approved? Reference all waste stream AK documentation used in review of this data package.	N/A	MP-TRUW-8.2, C4-3	No discrepancies. RPT-TRUW-05, RPT-TRUW-06, RPT-TRUW-12, RPT-TRUW-56.
(9) Have all applicable Quality Assurance Objectives (QAOs) been met, including precision, accuracy, completeness, and comparability, by using the appropriate acceptance criteria for each as specified in MP-TRUW-8.2, Quality Assurance Project Plan Section C3-4? Precision ¿ Verified prior to use by tuning precisely enough to demonstrate compliance with QAOs through viewing an image test pattern, as evidenced by a satisfactory Image Quality Indicator (IQI). ¿ Have discrepancies, if any, between radiography operators been reconciled? Accuracy ¿ Use of a target to tune the image for maximum sharpness as evidenced by a satisfactory IQI and by requiring operators to successfully identify 100% of the required items in a training container during initial and subsequent qualifications. Completeness ¿ An audio/videotape (or equivalent media) of the radiography examination and a validated radiography data form will be obtained for 100% of the retrievably stored waste container in the program for all waste containers subject to radiography. Comparability ¿ Use of standardized radiography procedures and operator qualifications.	Yes	MP-TRUW-8.2, C3-4a	
(10) Do the waste container contents match the WMC, waste stream description and identify the absence of prohibited items?	Yes	MP-TRUW-8.2, C1-3 and B3-11	
(11) If residual liquids exist in the container, is an estimate of quantity given?	Yes	MP-TRUW-8.2, C1-3	
(12) Do the individual container reports contain the (a) IDC, (b) Waste Matrix Code, (c) audio/video recording reference, (d) gross container weight, (e) waste material parameter weights, and (f) signature and date of examination?	Yes	MP-TRUW-8.2, C1-3 and C3-11a	
(13) Have the IDC, WMC, and/or waste stream for all	No	MP-TRUW-8.2, C1-3 and	Drum 10229567 received an IDC change. AKR-12-768

Batch Id RTR13-00241 **Open Date** 12-OCT-13 **Close Date** 13-OCT-13

Reviewer DAVE MARQUARDT **Approval Level** SPM Data Validation

Approval Date 11-NOV-13 **Review Iteration** 1

Question Text	Answer	Requirement	Comment
containers in the batch remained the same as originally assigned by the historical designation? If not, note the container number in the comment field and notify the Acceptable Knowledge Expert (AKE) if NCR does not exist on the WMC and IDC change.		C3-4a	R4
(14) Was a replicate scan performed by an independent operator on at least one container per day or once per testing batch, whichever is less frequent, by a qualified radiography operator that was not involved in the original scan of the waste container?	Yes	MP-TRUW-8.2, B1-3, C3-4a, and C3-10b(1)	
(15) Has an independent observation of one scan (not the replicate) been performed by a qualified operator that was not involved in the original scan of the waste container, at a rate of once per day or once per batch, whichever is less frequent? Record date of observation and any issues or concerns in the comment section.	Yes	MP-TRUW-8.2, C1-3 and C3-4a	The OIO was performed by a qualified operator on drum # 10342255 on 10/13/2013. No issues.
(16) Did personnel having current qualifications perform all RTR examinations?	Yes	MP-TRUW-8.1, Appendix F	
(17) Verify the correct procedure and revision number were used for all containers in this batch.	Yes	MP-TRUW-8.2, C3-4a	
(18) Verify the audio and video checks were performed and are satisfactory.	Yes	MP-TRUW-8.2, C3-4a	
(19) Verify that there are 20 or fewer containers in the batch.	Yes	MP-TRUW-8.2, C1-3	
(20) Does the data for all containers within this batch meet the review, validation, and verification requirements? · Are proper units (e.g. Liters or pounds) and significant figure used? · Is the BDR complete (all pages identified in the BDR and numbered accordingly)? - RTR Batch Coversheet - Table of Contents (manual review only) - RTR Analysis reports - Replicate Scan - Replicate Comparison - Independent Observation - Form-1412, ITR checklist - Associated NCRs - Form, 1491, Batch Data Report Supplemental Comment Form, as applicable - Audio/Video Recording References	Yes	MP-TRUW-8.2, C3 10b(2)	
(21) Review all NCR(s) (open and closed). Can the batch be approved?	Yes	MP-TRUW-8.2, C3-13	
(22) Is all data associated with this BDR acceptable for signature release?	Yes	MP-TRUW-8.2, C3 10b(2)	

Batch Id RTR13-00241 **Open Date** 12-OCT-13 **Close Date** 13-OCT-13

Esignature History

Esig Approval ID	User ID	Esig Date	Approval Level	Comments
2652559	DMARQUARDT	11-NOV-13	SPM	Reviewed and validated. Approve.
2651851	MSORENSON	09-NOV-13	ITR	Rework appears to have been completed satisfactorily. Promote to SPM.
2651777	MSORENSON	09-NOV-13	ITR	Demote to operations for rework.

AMWTP
Advanced Mixed Waste Treatment Project

AMWTP

RTR Analysis Report

Date: 11-Sep-2014

Time: 05:56

Batch Id RTR13-00241 **Container Id** 10044027 **Analysis Id** 0000092417

Container Type 001 drum, 55 Gallon (17C) **Analysis Status** Pass

RTR Date 12-OCT-2013 09:14 **Gross Weight** 145.530 Lbs. **Net Weight** 70.530 Lbs

Equipment Z-213-106 **Waste Matrix Code** S5490 **IDC** AW-164 ANL-W HRA/WCA Debris

Recording Id 2RTR13-00146 **Procedure Id** INST-OI-12 **Revision** 52 **Approval Level** SPM

Is Test Pattern Resolution Ok? Yes **Start Side** A **Replicate** No **OIO** No

Audio Visual Ok? Yes **Operator** FKUCK

Result Comment Waste consists primarily of plastic in the form of plastic sheeting, polybottles and gloveport rings. AK concurs with the recommended IDC, AW-164, for container 10044027. No AKR or NCR is necessary. CHD 10/29/13

Package

IDC Correct Yes **Recommended IDC** **Summary Category** S5000

Idc Change Reason

Rigid Liner Present? Yes **LinerType** TYPE 4

Liner Punctured? Yes **Sharp Objects?** No

Liner Lid Present? Yes **Sharp Objects Are Protected?** Yes

Liner Lid Deformed? No **Layers Of Confinement** 0

Fill Factor 95

Bag Closure Method No Bags

Liquids

Liquid Present? Yes **Internal Container with Liquid** Yes

Internal Container with Liquid .03 pints **LA Candidate** No

Liquid Between Liner & Drum 0 pints **Containerized Liquid**

Containerized Liquid Amt 0 pints

Total Liquid Amount .06 pints

Other Liquids .03 pints **Comment** 1 Tablespoon in a small polybottle located near the bottom of the waste and 1 Tablespoon in bagging also located at the bottom of the waste.

Prohibited Liquids Present No **Comment**

Contents-Drum or Box

	Value	Comment		Value	Comment
Lead?	No		Mercury Present?	No	
Wet Cell Batteries?	No		Explosives?	No	
Prohibited Compressed Gases?	No		PCBs Present?	No	
Aerosol Cans?	No		PCB Mass (lbs)	0	
Non-Mixed Hazardous Waste Present?	No		Sealed Containers Over 4L?	No	

Non-Radionuclide Pyrophoric Materials Present? No

Waste exhibiting the characteristics of Ignitability, Corrosivity or Reactivity Present? No

Wastes Incompatible with backfill, seal and panel closure materials, container and packaging materials,shipping container or other wastes? No

Impenetrable Dense Objects? No

Waste Material Items

Packaging Materials

Material Item	Quantity	Unit	Unit Wt(lbs)	Item Wt(lbs)
90 mil liner	1.000	EACH	16.000	16.000

Waste Items byWeight

Material Item	Quantity	Unit	Unit Wt(lbs)	Item Wt(lbs)
towels and wipes	2.000	EACH	5.000	10.000
drum lids	1.500	EACH	10.000	15.000

Waste Items by Volume

Material Item	Quantity	Unit	Unit Wt(lbs)	Item Wt(lbs)
Liquids for Other Inorganics	0.060	PINTS	1.000	0.060

Batch Id RTR13-00241 **Container Id** 10044027 **Analysis Id** 0000092417

Waste Parameters

Waste Parameter	Remaining Weight %	Actual Weight Lbs
Iron-based Metals/Alloys	0.000	15.000
Aluminum-based Metals/Alloys	0.000	0.000
Other metals	0.000	0.000
Other Inorganic Materials	0.000	0.060
Cellulosics	0.000	10.000
Rubber	0.000	0.000
Plastic (Waste Materials)	100.000	45.470
Inorganic matrix	0.000	0.000
Organic matrix	0.000	0.000
Soils/gravel	0.000	0.000
Steel (packaging materials)	0.000	59.000
Plastic (packaging materials)	0.000	16.000
Cellulosics Packaging	0.000	0.000

Analysis Esignature History

Esig Approval Id	User Id	Esignature Date	Comment
2646299	CHINKLE	29-OCT-2013 13:21	This batch is returned for rework. AK does not concur with the recommended IDC change for container 10229567. CHD 10/29/13
2638251	FKUCK	12-OCT-2013 09:14	

Batch Id RTR13-00241 **Container Id** 10235070 **Analysis Id** 0000092419

Container Type A drum, 55 Gallon Drum (17H) **Analysis Status** Pass

RTR Date 12-OCT-2013 09:32 **Gross Weight** 136.710 **Lbs.** **Net Weight** 75.710 **Lbs**

Equipment Z-213-106 **Waste Matrix Code** S5300 **IDC** RF-330 Paper and Rags-Dry

Recording Id 2RTR13-00146 **Procedure Id** INST-OI-12 **Revision** 52 **Approval Level** SPM

Is Test Pattern Resolution Ok? Yes **Start Side** A **Replicate** No **OIO** No

Audio Visual Ok? Yes **Operator** FKUCK

Result Comment Waste consists primarily of plastic sheeting, polybottles and ppe.

Package

IDC Correct Yes **Recommended IDC** **Summary Category** S5000

Idc Change Reason

Rigid Liner Present? No **LinerType** NO LINER

Liner Punctured? N/A **Sharp Objects?** No

Liner Lid Present? No **Sharp Objects Are Protected?** Yes

Liner Lid Deformed? N/A **Layers Of Confinement** 2

Fill Factor 85

Bag Closure Method Twisted and Taped

Liquids

Liquid Present? No **Internal Container with Liquid** No

Internal Container with Liquid 0 pints **LA Candidate** No

Liquid Between Liner & Drum 0 pints **Containerized Liquid**

Total Liquid Amount 0 pints **Containerized Liquid Amt** 0 pints

Other Liquids 0 pints **Comment**

Prohibited Liquids Present No **Comment**

Contents-Drum or Box

	Value	Comment		Value	Comment
Lead?	No		**Mercury Present?**	No	
Wet Cell Batteries?	No		**Explosives?**	No	
Prohibited Compressed Gases?	No		**PCBs Present?**	No	
Aerosol Cans?	No		**PCB Mass (lbs)**	0	
Non-Mixed Hazardous Waste Present?	No		**Sealed Containers Over 4L?**	No	

Non-Radionuclide Pyrophoric Materials Present? No

Waste exhibiting the characteristics of Ignitability, Corrosivity or Reactivity Present? No

Wastes Incompatible with backfill, seal and panel closure materials, container and packaging materials,shipping container or other wastes? No

Impenetrable Dense Objects? No

Waste Material Items

Packaging Materials

Material Item	Quantity	Unit	Unit Wt(lbs)	Item Wt(lbs)
Drum plastic bag	2.000	EACH	1.000	2.000

Waste Items byWeight

Material Item	Quantity	Unit	Unit Wt(lbs)	Item Wt(lbs)
respirator filter cartridges	1.000	EACH	20.000	20.000
metal debris	1.000	EACH	3.000	3.000
respirators	1.000	EACH	7.000	7.000

Waste Items by Volume

Material Item	Quantity	Unit	Unit Wt(lbs)	Item Wt(lbs)
Oil-Dri (Inside 55 gal drum)	8.000	PINTS	0.420	3.360

Batch Id RTR13-00241 **Container Id** 10235070 **Analysis Id** 0000092419

Waste Parameters

Waste Parameter	Remaining Weight %	Actual Weight Lbs
Iron-based Metals/Alloys	0.000	3.000
Aluminum-based Metals/Alloys	0.000	14.000
Other metals	0.000	0.000
Other Inorganic Materials	0.000	3.360
Cellulosics	0.000	6.000
Rubber	0.000	7.000
Plastic (Waste Materials)	100.000	42.350
Inorganic matrix	0.000	0.000
Organic matrix	0.000	0.000
Soils/gravel	0.000	0.000
Steel (packaging materials)	0.000	59.000
Plastic (packaging materials)	0.000	2.000
Cellulosics Packaging	0.000	0.000

Analysis Esignature History

Esig Approval Id	User Id	Esignature Date	Comment
2638253	FKUCK	12-OCT-2013 09:32	

Batch Id RTR13-00241 **Container Id** 10230893 **Analysis Id** 0000092422

Container Type A drum, 55 Gallon Drum (17H) **Analysis Status** Pass

RTR Date 12-OCT-2013 11:00 **Gross Weight** 187.425 **Lbs.** **Net Weight** 126.425 **Lbs.**

Equipment Z-213-106 **Waste Matrix Code** S5300 **IDC** RF-336 Paper and Rags-Moist

Recording Id 2RTR13-00146 **Procedure Id** INST-OI-12 **Revision** 52 **Approval Level** SPM

Is Test Pattern Resolution Ok? Yes **Start Side** A **Replicate** No **OIO** No

Audio Visual Ok? Yes **Operator** FKUCK

Result Comment Waste appears to be primarily towels, wipes and cloth coveralls. Correcting Recording ID

Package

IDC Correct Yes **Recommended IDC** **Summary Category** S5000

Idc Change Reason

Rigid Liner Present? No **LinerType** NO LINER

Liner Punctured? N/A **Sharp Objects?** No

Liner Lid Present? No **Sharp Objects Are Protected?** Yes

Liner Lid Deformed? N/A **Layers Of Confinement** 3

Fill Factor 90

Bag Closure Method Twisted and Taped

Liquids

Liquid Present? Yes **Internal Container with Liquid** No

Internal Container with Liquid 0 pints **LA Candidate** No

Liquid Between Liner & Drum 0 pints **Containerized Liquid**

Containerized Liquid Amt 0 pints

Total Liquid Amount 1 pints

Other Liquids 1 pints **Comment** 1 pint at the bottom of the waste

Prohibited Liquids Present No **Comment**

Contents-Drum or Box

	Value	Comment		Value	Comment
Lead?	Yes, Acceptable	lead tid's	**Mercury Present?**	No	
Wet Cell Batteries?	No		**Explosives?**	No	
Prohibited Compressed Gases?	No		**PCBs Present?**	No	
Aerosol Cans?	No		**PCB Mass (lbs)**	0	
Non-Mixed Hazardous Waste Present?	No		**Sealed Containers Over 4L?**	No	

Non-Radionuclide Pyrophoric Materials Present? No

Waste exhibiting the characteristics of Ignitability, Corrosivity or Reactivity Present? No

Wastes Incompatible with backfill, seal and panel closure materials, container and packaging materials,shipping container or other wastes? No

Impenetrable Dense Objects? No

Waste Material Items

Packaging Materials

Material Item	Quantity	Unit	Unit Wt(lbs)	Item Wt(lbs)
Drum plastic bag	2.000	EACH	1.000	2.000

Waste Items byWeight

Material Item	Quantity	Unit	Unit Wt(lbs)	Item Wt(lbs)
metal debris and electrical equipment	1.000	EACH	10.000	10.000
plastic bags and sheeting	1.000	EACH	5.000	5.000
lead tid's	1.000	EACH	0.500	0.500
Plastic bag for waste	1.000	EACH	0.250	0.250

Waste Items by Volume

Material Item	Quantity	Unit	Unit Wt(lbs)	Item Wt(lbs)
Vermiculite (95 gm/liter) .125 lb/pint	12.000	PINTS	0.125	1.500
Liquids for Other Inorganics	1.000	PINTS	1.000	1.000

Batch Id RTR13-00241 **Container Id** 10230893 **Analysis Id** 0000092422

Waste Parameters

Waste Parameter	Remaining Weight %	Actual Weight Lbs
Iron-based Metals/Alloys	0.000	10.000
Aluminum-based Metals/Alloys	0.000	0.000
Other metals	0.000	0.500
Other Inorganic Materials	0.000	2.500
Cellulosics	100.000	108.175
Rubber	0.000	0.000
Plastic (Waste Materials)	0.000	5.250
Inorganic matrix	0.000	0.000
Organic matrix	0.000	0.000
Soils/gravel	0.000	0.000
Steel (packaging materials)	0.000	59.000
Plastic (packaging materials)	0.000	2.000
Cellulosics Packaging	0.000	0.000
MLLW Waste	0.000	0.000

Analysis Esignature History

Esig Approval Id	User Id	Esignature Date	Comment
2638595	DSCOX	13-OCT-2013 15:42	Correcting Recording ID
2638296	FKUCK	12-OCT-2013 11:00	

Batch Id RTR13-00241 **Container Id** 10328793 **Analysis Id** 0000092423

Container Type A drum, 55 Gallon Drum (17H) **Analysis Status** Pass

RTR Date 12-OCT-2013 11:17 **Gross Weight** 403.515 **Lbs.** **Net Weight** 342.515 **Lbs.**

Equipment Z-213-106 **Waste Matrix Code** S5490 **IDC** RF-960 Concrete, Asphalt, etc.

Recording Id 2RTR13-00146 **Procedure Id** INST-OI-12 **Revision** 52 **Approval Level** SPM

Is Test Pattern Resolution Ok? Yes **Start Side** A **Replicate** No **OIO** No

Audio Visual Ok? Yes **Operator** FKUCK

Result Comment Waste appears to be asphalt.
(rework) Entered No into Impenetrable Dense Objects field. K.H. 11-09-13

Package

IDC Correct Yes **Recommended IDC** **Summary Category** S5000

Idc Change Reason

Rigid Liner Present? No **LinerType** NO LINER

Liner Punctured? N/A **Sharp Objects?** No

Liner Lid Present? No **Sharp Objects Are Protected?** Yes

Liner Lid Deformed? N/A **Layers Of Confinement** 3

Fill Factor 95

Bag Closure Method Twisted and Taped

Liquids

Liquid Present? No **Internal Container with Liquid** No

Internal Container with Liquid 0 pints **LA Candidate** No

Liquid Between Liner & Drum 0 pints **Containerized Liquid**

Total Liquid Amount 0 pints **Containerized Liquid Amt** 0 pints

Other Liquids 0 pints **Comment**

Prohibited Liquids Present No **Comment**

Contents-Drum or Box

	Value	Comment		Value	Comment
Lead?	No		**Mercury Present?**	No	
Wet Cell Batteries?	No		**Explosives?**	No	
Prohibited Compressed Gases?	No		**PCBs Present?**	No	
Aerosol Cans?	No		**PCB Mass (lbs)**	0	
Non-Mixed Hazardous Waste Present?	No		**Sealed Containers Over 4L?**	No	

Non-Radionuclide Pyrophoric Materials Present? No

Waste exhibiting the characteristics of Ignitability, Corrosivity or Reactivity Present? No

Wastes Incompatible with backfill, seal and panel closure materials, container and packaging materials,shipping container or other wastes? No

Impenetrable Dense Objects? No

Waste Material Items

Packaging Materials

Material Item	Quantity	Unit	Unit Wt(lbs)	Item Wt(lbs)
Drum plastic bag	2.000	EACH	1.000	2.000

Waste Items byWeight

Material Item	Quantity	Unit	Unit Wt(lbs)	Item Wt(lbs)
Cardboard liner	1.000	EACH	4.000	4.000
Plastic bag for waste	6.000	EACH	0.250	1.500

Waste Items by Volume

Material Item	Quantity	Unit	Unit Wt(lbs)	Item Wt(lbs)
Oil-Dri (Inside 55 gal drum)	6.000	PINTS	0.420	2.520

Batch Id RTR13-00241 **Container Id** 10328793 **Analysis Id** 0000092423

Waste Parameters

Waste Parameter	Remaining Weight %	Actual Weight Lbs
Iron-based Metals/Alloys	0.000	0.000
Aluminum-based Metals/Alloys	0.000	0.000
Other metals	0.000	0.000
Other Inorganic Materials	95.000	320.290
Cellulosics	0.000	4.000
Rubber	0.000	0.000
Plastic (Waste Materials)	0.000	1.500
Inorganic matrix	0.000	0.000
Organic matrix	5.000	16.725
Soils/gravel	0.000	0.000
Steel (packaging materials)	0.000	59.000
Plastic (packaging materials)	0.000	2.000
Cellulosics Packaging	0.000	0.000

Analysis Esignature History

Esig Approval Id	User Id	Esignature Date	Comment
2651803	KHUGHES	09-NOV-2013 10:11	
2638306	FKUCK	12-OCT-2013 11:17	

Batch Id RTR13-00241 **Container Id** 10002661 **Analysis Id** 0000092425

Container Type 001 drum, 55 Gallon (17C) **Analysis Status** Non Reportable

Analysis Esignature History

Esig Approval Id	User Id	Esignature Date	Comment

Batch Id RTR13-00241 **Container Id** 10241097 **Analysis Id** 0000092426

Container Type A drum, 55 Gallon Drum (17H) **Analysis Status** Pass

RTR Date 12-OCT-2013 13:51 **Gross Weight** 143.325 **Lbs.** **Net Weight** 82.325 **Lbs**

Equipment Z-213-106 **Waste Matrix Code** S5300 **IDC** RF-337 Plastics, Teflon, Washables, PVC

Recording Id 2RTR13-00146 **Procedure Id** INST-OI-12 **Revision** 52 **Approval Level** SPM

Is Test Pattern Resolution Ok? Yes **Start Side** A **Replicate** No **OIO** No

Audio Visual Ok? Yes **Operator** FKUCK

Result Comment Waste consists primarily of plastic sheeting, bags and ppe.

Package

IDC Correct Yes **Recommended IDC** **Summary Category** S5000

Idc Change Reason

Rigid Liner Present? No **LinerType** NO LINER

Liner Punctured? N/A **Sharp Objects?** Yes

Liner Lid Present? No **Sharp Objects Are Protected?** Yes

Liner Lid Deformed? N/A **Layers Of Confinement** 3

Fill Factor 85

Bag Closure Method Twisted and Taped

Liquids

Liquid Present? No **Internal Container with Liquid** No

Internal Container with Liquid 0 pints **LA Candidate** No

Liquid Between Liner & Drum 0 pints **Containerized Liquid**

Total Liquid Amount 0 pints **Containerized Liquid Amt** 0 pints

Other Liquids 0 pints **Comment**

Prohibited Liquids Present No **Comment**

Contents-Drum or Box

	Value	Comment		Value	Comment
Lead?	No		**Mercury Present?**	No	
Wet Cell Batteries?	No		**Explosives?**	No	
Prohibited Compressed Gases?	No		**PCBs Present?**	No	
Aerosol Cans?	No		**PCB Mass (lbs)**	0	
Non-Mixed Hazardous Waste Present?	No		**Sealed Containers Over 4L?**	No	

Non-Radionuclide Pyrophoric Materials Present? No

Waste exhibiting the characteristics of Ignitability, Corrosivity or Reactivity Present? No

Wastes Incompatible with backfill, seal and panel closure materials, container and packaging materials,shipping container or other wastes? No

Impenetrable Dense Objects? No

Waste Material Items

Packaging Materials

Material Item	Quantity	Unit	Unit Wt(lbs)	Item Wt(lbs)
Drum plastic bag	2.000	EACH	1.000	2.000

Waste Items byWeight

Material Item	Quantity	Unit	Unit Wt(lbs)	Item Wt(lbs)
metal wire and miscelaneous debris.	1.000	EACH	15.000	15.000
Fiber pack	1.000	EACH	6.000	6.000
Plastic bag for waste	1.000	EACH	0.250	0.250

Waste Items by Volume

Material Item	Quantity	Unit	Unit Wt(lbs)	Item Wt(lbs)
Vermiculite (95 gm/liter) .125 lb/pint	40.000	PINTS	0.125	5.000

Batch Id RTR13-00241 **Container Id** 10241097 **Analysis Id** 0000092426

Waste Parameters

Waste Parameter	Remaining Weight %	Actual Weight Lbs
Iron-based Metals/Alloys	0.000	15.000
Aluminum-based Metals/Alloys	0.000	0.000
Other metals	0.000	0.000
Other Inorganic Materials	0.000	5.000
Cellulosics	0.000	6.000
Rubber	0.000	0.000
Plastic (Waste Materials)	100.000	56.325
Inorganic matrix	0.000	0.000
Organic matrix	0.000	0.000
Soils/gravel	0.000	0.000
Steel (packaging materials)	0.000	59.000
Plastic (packaging materials)	0.000	2.000
Cellulosics Packaging	0.000	0.000

Analysis Esignature History

Esig Approval Id	User Id	Esignature Date	Comment
2638341	FKUCK	12-OCT-2013 13:51	

Batch Id RTR13-00241 **Container Id** 10330338 **Analysis Id** 0000092428

Container Type A drum, 55 Gallon Drum (17H) **Analysis Status** Pass

RTR Date 12-OCT-2013 14:06 **Gross Weight** 522.585 **Lbs.** **Net Weight** 461.585 **Lbs.**

Equipment Z-213-106 **Waste Matrix Code** S5490 **IDC** RF-960 Concrete, Asphalt, etc.

Recording Id 2RTR13-00146 **Procedure Id** INST-OI-12 **Revision** 52 **Approval Level** SPM

Is Test Pattern Resolution Ok? Yes **Start Side** A **Replicate** No **OIO** No

Audio Visual Ok? Yes **Operator** FKUCK

Result Comment Waste consists of concrete.

Package

IDC Correct Yes **Recommended IDC** **Summary Category** S5000

Idc Change Reason

Rigid Liner Present? No **LinerType** NO LINER

Liner Punctured? N/A **Sharp Objects?** Yes

Liner Lid Present? No **Sharp Objects Are Protected?** Yes

Liner Lid Deformed? N/A **Layers Of Confinement** 2

Fill Factor 96

Bag Closure Method Twisted and Taped

Liquids

Liquid Present? No **Internal Container with Liquid** No

Internal Container with Liquid 0 pints **LA Candidate** No

Liquid Between Liner & Drum 0 pints **Containerized Liquid**

Containerized Liquid Amt 0 pints

Total Liquid Amount 0 pints

Other Liquids 0 pints **Comment**

Prohibited Liquids Present No **Comment**

Contents-Drum or Box

	Value	Comment		Value	Comment
Lead?	No		Mercury Present?	No	
Wet Cell Batteries?	No		Explosives?	No	
Prohibited Compressed Gases?	No		PCBs Present?	No	
Aerosol Cans?	No		PCB Mass (lbs)	0	
Non-Mixed Hazardous Waste Present?	No		Sealed Containers Over 4L?	No	

Non-Radionuclide Pyrophoric Materials Present? No

Waste exhibiting the characteristics of Ignitability, Corrosivity or Reactivity Present? No

Wastes Incompatible with backfill, seal and panel closure materials, container and packaging materials,shipping container or other wastes? No

Impenetrable Dense Objects? Yes - Unacceptable concrete

Waste Material Items

Packaging Materials

Material Item	Quantity	Unit	Unit Wt(lbs)	Item Wt(lbs)
Drum plastic bag	2.000	EACH	1.000	2.000

Waste Items byWeight

Material Item	Quantity	Unit	Unit Wt(lbs)	Item Wt(lbs)
plastic waste and ppe	1.000	EACH	5.000	5.000
metal rebar	1.000	EACH	10.000	10.000
Cardboard liner	1.000	EACH	4.000	4.000

Waste Items by Volume

Material Item	Quantity	Unit	Unit Wt(lbs)	Item Wt(lbs)
Oil-Dri (Inside 55 gal drum)	3.000	PINTS	0.420	1.260

Batch Id RTR13-00241 **Container Id** 10330338 **Analysis Id** 0000092428

Waste Parameters

Waste Parameter	Remaining Weight %	Actual Weight Lbs
Iron-based Metals/Alloys	0.000	10.000
Aluminum-based Metals/Alloys	0.000	0.000
Other metals	0.000	0.000
Other Inorganic Materials	100.000	442.585
Cellulosics	0.000	4.000
Rubber	0.000	0.000
Plastic (Waste Materials)	0.000	5.000
Inorganic matrix	0.000	0.000
Organic matrix	0.000	0.000
Soils/gravel	0.000	0.000
Steel (packaging materials)	0.000	59.000
Plastic (packaging materials)	0.000	2.000
Cellulosics Packaging	0.000	0.000

Analysis Esignature History

Esig Approval Id	User Id	Esignature Date	Comment
2638345	FKUCK	12-OCT-2013 14:06	

Batch Id RTR13-00241 **Container Id** 10187866 **Analysis Id** 0000092430

Container Type A drum, 55 Gallon Drum (17H) **Analysis Status** Pass

RTR Date 12-OCT-2013 14:24 **Gross Weight** 176.400 **Lbs.** **Net Weight** 115.400 **Lbs.**

Equipment Z-213-106 **Waste Matrix Code** S5300 **IDC** RF-336 Paper and Rags-Moist

Recording Id 2RTR13-00146 **Procedure Id** INST-OI-12 **Revision** 52 **Approval Level** SPM

Is Test Pattern Resolution Ok? Yes **Start Side** A **Replicate** No **OIO** No

Audio Visual Ok? Yes **Operator** FKUCK

Result Comment Waste consists primarily of plastic sheeting, bags and ppe.

Package

IDC Correct Yes **Recommended IDC** **Summary Category** S5000

Idc Change Reason

Rigid Liner Present? No **LinerType** NO LINER

Liner Punctured? N/A **Sharp Objects?** No

Liner Lid Present? No **Sharp Objects Are Protected?** Yes

Liner Lid Deformed? N/A **Layers Of Confinement** 3

Fill Factor 98

Bag Closure Method Twisted and Taped

Liquids

Liquid Present? No **Internal Container with Liquid** No

Internal Container with Liquid 0 pints **LA Candidate** No

Liquid Between Liner & Drum 0 pints **Containerized Liquid**

Total Liquid Amount 0 pints **Containerized Liquid Amt** 0 pints

Other Liquids 0 pints **Comment**

Prohibited Liquids Present No **Comment**

Contents-Drum or Box

	Value	Comment		Value	Comment
Lead?	Yes, Acceptable	lead tape	**Mercury Present?**	No	
Wet Cell Batteries?	No		**Explosives?**	No	
Prohibited Compressed Gases?	No		**PCBs Present?**	No	
Aerosol Cans?	No		**PCB Mass (lbs)**	0	
Non-Mixed Hazardous Waste Present?	No		**Sealed Containers Over 4L?**	No	

Non-Radionuclide Pyrophoric Materials Present? No

Waste exhibiting the characteristics of Ignitability, Corrosivity or Reactivity Present? No

Wastes Incompatible with backfill, seal and panel closure materials, container and packaging materials,shipping container or other wastes? No

Impenetrable Dense Objects? No

Waste Material Items

Packaging Materials

Material Item	Quantity	Unit	Unit Wt(lbs)	Item Wt(lbs)
Drum plastic bag	2.000	EACH	1.000	2.000

Waste Items byWeight

Material Item	Quantity	Unit	Unit Wt(lbs)	Item Wt(lbs)
towels, wipes and wood	1.000	EACH	15.000	15.000
respirator	1.000	EACH	1.000	1.000
metal debris	1.000	EACH	5.000	5.000
lead tape	1.000	EACH	0.250	0.250
Plastic bag for waste	1.000	EACH	0.250	0.250

Waste Items by Volume

Material Item	Quantity	Unit	Unit Wt(lbs)	Item Wt(lbs)

Batch Id RTR13-00241 **Container Id** 10187866 **Analysis Id** 0000092430

Waste Parameters

Waste Parameter	Remaining Weight %	Actual Weight Lbs
Iron-based Metals/Alloys	0.000	5.000
Aluminum-based Metals/Alloys	0.000	0.000
Other metals	0.000	0.250
Other Inorganic Materials	0.000	0.000
Cellulosics	0.000	15.000
Rubber	0.000	1.000
Plastic (Waste Materials)	100.000	94.150
Inorganic matrix	0.000	0.000
Organic matrix	0.000	0.000
Soils/gravel	0.000	0.000
Steel (packaging materials)	0.000	59.000
Plastic (packaging materials)	0.000	2.000
Cellulosics Packaging	0.000	0.000

Analysis Esignature History

Esig Approval Id	User Id	Esignature Date	Comment
2638350	FKUCK	12-OCT-2013 14:24	

Batch Id RTR13-00241 **Container Id** 10416151 **Analysis Id** 0000092433

Container Type A drum, 55 Gallon Drum (17H) **Analysis Status** Pass

RTR Date 12-OCT-2013 15:23 **Gross Weight** 482.895 Lbs. **Net Weight** 407.895 Lbs.

Equipment Z-213-106 **Waste Matrix Code** S3114 **IDC** RF-003 Organic Setups, Oil Solids

Recording Id 2RTR13-00146 **Procedure Id** INST-OI-12 **Revision** 52 **Approval Level** SPM

Is Test Pattern Resolution Ok? Yes **Start Side** A **Replicate** No **OIO** No

Audio Visual Ok? Yes **Operator** FKUCK

Result Comment Waste appears to be sludge.

Package

IDC Correct Yes **Recommended IDC** **Summary Category** S3000

Idc Change Reason

Rigid Liner Present? Yes **LinerType** TYPE 2

Liner Punctured? Yes **Sharp Objects?** No

Liner Lid Present? No **Sharp Objects Are Protected?** Yes

Liner Lid Deformed? N/A **Layers Of Confinement** 0

Fill Factor 96

Bag Closure Method No Bags

Liquids

Liquid Present? Yes **Internal Container with Liquid** No

Internal Container with Liquid 0 pints **LA Candidate** No

Liquid Between Liner & Drum 0 pints **Containerized Liquid**

Total Liquid Amount .5 pints **Containerized Liquid Amt** 0 pints

Other Liquids .5 pints **Comment** 0.5 pint located at the bottom of the waste

Prohibited Liquids Present Yes **Comment** PCB's with liquid

Contents-Drum or Box

	Value	Comment		Value	Comment
Lead?	No		**Mercury Present?**	No	
Wet Cell Batteries?	No		**Explosives?**	No	
Prohibited Compressed Gases?	No		**PCBs Present?**	Yes - Prohibited	Liquid
Aerosol Cans?	No		**PCB Mass (lbs)**	407.9	
Non-Mixed Hazardous Waste Present?	No		**Sealed Containers Over 4L?**	No	

Non-Radionuclide Pyrophoric Materials Present? No

Waste exhibiting the characteristics of Ignitability, Corrosivity or Reactivity Present? No

Wastes Incompatible with backfill, seal and panel closure materials, container and packaging materials,shipping container or other wastes? No

Impenetrable Dense Objects? No

Waste Material Items

Packaging Materials

Material Item	Quantity	Unit	Unit Wt(lbs)	Item Wt(lbs)
90 mil liner	1.000	EACH	16.000	16.000

Waste Items byWeight

Material Item	Quantity	Unit	Unit Wt(lbs)	Item Wt(lbs)
Drum Bag	1.000	EACH	1.000	1.000

Waste Items by Volume

Material Item	Quantity	Unit	Unit Wt(lbs)	Item Wt(lbs)
Liquids for Organic Matrix	0.500	PINTS	1.000	0.500

Batch Id RTR13-00241 **Container Id** 10416151 **Analysis Id** 0000092433

Waste Parameters

Waste Parameter	Remaining Weight %	Actual Weight Lbs
Iron-based Metals/Alloys	0.000	0.000
Aluminum-based Metals/Alloys	0.000	0.000
Other metals	0.000	0.000
Other Inorganic Materials	0.000	0.000
Cellulosics	0.000	0.000
Rubber	0.000	0.000
Plastic (Waste Materials)	0.000	1.000
Inorganic matrix	0.000	0.000
Organic matrix	100.000	406.895
Soils/gravel	0.000	0.000
Steel (packaging materials)	0.000	59.000
Plastic (packaging materials)	0.000	16.000
Cellulosics Packaging	0.000	0.000

Analysis Esignature History

Esig Approval Id	User Id	Esignature Date	Comment
2638374	FKUCK	12-OCT-2013 15:23	

Batch Id RTR13-00241 **Container Id** 10244302 **Analysis Id** 0000092434

Container Type A drum, 55 Gallon Drum (17H) **Analysis Status** Pass

RTR Date 12-OCT-2013 15:40 **Gross Weight** 141.120 **Lbs.** **Net Weight** 80.120 **Lbs**

Equipment Z-213-106 **Waste Matrix Code** S5300 **IDC** RF-337 Plastics, Teflon, Washables, PVC

Recording Id 2RTR13-00146 **Procedure Id** INST-OI-12 **Revision** 52 **Approval Level** SPM

Is Test Pattern Resolution Ok? Yes **Start Side** A **Replicate** No **OIO** No

Audio Visual Ok? Yes **Operator** FKUCK

Result Comment Waste consists primarily of plastic bags, sheeting and polybottles.

Package

IDC Correct Yes **Recommended IDC** **Summary Category** S5000

Idc Change Reason

Rigid Liner Present? No **LinerType** NO LINER

Liner Punctured? N/A **Sharp Objects?** No

Liner Lid Present? No **Sharp Objects Are Protected?** Yes

Liner Lid Deformed? N/A **Layers Of Confinement** 4

Fill Factor 90

Bag Closure Method Twisted and Taped

Liquids

Liquid Present? No **Internal Container with Liquid** No

Internal Container with Liquid 0 pints **LA Candidate** No

Liquid Between Liner & Drum 0 pints **Containerized Liquid**

Total Liquid Amount 0 pints **Containerized Liquid Amt** 0 pints

Other Liquids 0 pints **Comment**

Prohibited Liquids Present No **Comment**

Contents-Drum or Box

	Value	Comment		Value	Comment
Lead?	Yes, Acceptable	lead tape	**Mercury Present?**	No	
Wet Cell Batteries?	No		**Explosives?**	No	
Prohibited Compressed Gases?	No		**PCBs Present?**	No	
Aerosol Cans?	No		**PCB Mass (lbs)**	0	
Non-Mixed Hazardous Waste Present?	No		**Sealed Containers Over 4L?**	Yes	large polybottle

Non-Radionuclide Pyrophoric Materials Present? No

Waste exhibiting the characteristics of Ignitability, Corrosivity or Reactivity Present? No

Wastes Incompatible with backfill, seal and panel closure materials, container and packaging materials,shipping container or other wastes? No

Impenetrable Dense Objects? No

Waste Material Items

Packaging Materials

Material Item	Quantity	Unit	Unit Wt(lbs)	Item Wt(lbs)
Drum plastic bag	2.000	EACH	1.000	2.000

Waste Items byWeight

Material Item	Quantity	Unit	Unit Wt(lbs)	Item Wt(lbs)
rubber o-rings	1.000	EACH	15.000	15.000
metal debris	1.000	EACH	5.000	5.000
lead tape	1.000	EACH	0.250	0.250
Large polybottle	1.000	EACH	2.000	2.000
Cardboard liner	1.000	EACH	4.000	4.000
Plastic bag for waste	1.000	EACH	0.250	0.250

Waste Items by Volume

Material Item	Quantity	Unit	Unit Wt(lbs)	Item Wt(lbs)
Oil-Dri (Inside 55 gal drum)	2.000	PINTS	0.420	0.840

Batch Id RTR13-00241 **Container Id** 10244302 **Analysis Id** 0000092434

Waste Parameters

Waste Parameter	Remaining Weight %	Actual Weight Lbs
Iron-based Metals/Alloys	0.000	5.000
Aluminum-based Metals/Alloys	0.000	0.000
Other metals	0.000	0.250
Other Inorganic Materials	0.000	0.840
Cellulosics	0.000	4.000
Rubber	0.000	15.000
Plastic (Waste Materials)	100.000	55.030
Inorganic matrix	0.000	0.000
Organic matrix	0.000	0.000
Soils/gravel	0.000	0.000
Steel (packaging materials)	0.000	59.000
Plastic (packaging materials)	0.000	2.000
Cellulosics Packaging	0.000	0.000

Analysis Esignature History

Esig Approval Id	User Id	Esignature Date	Comment
2638377	FKUCK	12-OCT-2013 15:40	

Batch Id RTR13-00241 **Container Id** 10328375 **Analysis Id** 0000092435

Container Type A drum, 55 Gallon Drum (17H) **Analysis Status** Pass

RTR Date 12-OCT-2013 16:41 **Gross Weight** 125.685 **Lbs.** **Net Weight** 64.685 **Lbs**

Equipment Z-213-106 **Waste Matrix Code** S5300 **IDC** RF-330 Paper and Rags-Dry

Recording Id 2RTR13-00146 **Procedure Id** INST-OI-12 **Revision** 52 **Approval Level** SPM

Is Test Pattern Resolution Ok? Yes **Start Side** A **Replicate** No **OIO** No

Audio Visual Ok? Yes **Operator** FKUCK

Result Comment Waste consists primarily of cloth coveralls.

Package

IDC Correct Yes **Recommended IDC** **Summary Category** S5000

Idc Change Reason

Rigid Liner Present? No **LinerType** NO LINER

Liner Punctured? N/A **Sharp Objects?** No

Liner Lid Present? No **Sharp Objects Are Protected?** Yes

Liner Lid Deformed? N/A **Layers Of Confinement** 3

Fill Factor 95

Bag Closure Method Twisted and Taped

Liquids

Liquid Present? No **Internal Container with Liquid** No

Internal Container with Liquid 0 pints **LA Candidate** No

Liquid Between Liner & Drum 0 pints **Containerized Liquid**

Total Liquid Amount 0 pints **Containerized Liquid Amt** 0 pints

Other Liquids 0 pints **Comment**

Prohibited Liquids Present No **Comment**

Contents-Drum or Box

	Value	Comment		Value	Comment
Lead?	No		**Mercury Present?**	No	
Wet Cell Batteries?	No		**Explosives?**	No	
Prohibited Compressed Gases?	No		**PCBs Present?**	No	
Aerosol Cans?	No		**PCB Mass (lbs)**	0	
Non-Mixed Hazardous Waste Present?	No		**Sealed Containers Over 4L?**	No	

Non-Radionuclide Pyrophoric Materials Present? No

Waste exhibiting the characteristics of Ignitability, Corrosivity or Reactivity Present? No

Wastes Incompatible with backfill, seal and panel closure materials, container and packaging materials,shipping container or other wastes? No

Impenetrable Dense Objects? No

Waste Material Items

Packaging Materials

Material Item	Quantity	Unit	Unit Wt(lbs)	Item Wt(lbs)
Drum plastic bag	2.000	EACH	1.000	2.000

Waste Items byWeight

Material Item	Quantity	Unit	Unit Wt(lbs)	Item Wt(lbs)
metal debris	1.000	EACH	2.000	2.000
Cardboard liner	1.000	EACH	4.000	4.000
Plastic bag for waste	1.000	EACH	0.250	0.250

Waste Items by Volume

Material Item	Quantity	Unit	Unit Wt(lbs)	Item Wt(lbs)
Oil-Dri (Inside 55 gal drum)	8.000	PINTS	0.420	3.360

Batch Id RTR13-00241 **Container Id** 10328375 **Analysis Id** 0000092435

Waste Parameters

Waste Parameter	Remaining Weight %	Actual Weight Lbs
Iron-based Metals/Alloys	0.000	2.000
Aluminum-based Metals/Alloys	0.000	0.000
Other metals	0.000	0.000
Other Inorganic Materials	0.000	3.360
Cellulosics	100.000	59.075
Rubber	0.000	0.000
Plastic (Waste Materials)	0.000	0.250
Inorganic matrix	0.000	0.000
Organic matrix	0.000	0.000
Soils/gravel	0.000	0.000
Steel (packaging materials)	0.000	59.000
Plastic (packaging materials)	0.000	2.000
Cellulosics Packaging	0.000	0.000

Analysis Esignature History

Esig Approval Id	User Id	Esignature Date	Comment
2638384	FKUCK	12-OCT-2013 16:41	

Batch Id RTR13-00241 **Container Id** 10229567 **Analysis Id** 0000092437

Container Type A drum, 55 Gallon Drum (17H) **Analysis Status** Pass

RTR Date 12-OCT-2013 16:57 **Gross Weight** 207.270 **Lbs.** **Net Weight** 146.270 **Lbs.**

Equipment Z-213-106 **Waste Matrix Code** S5490 **IDC** RF-960 Concrete, Asphalt, etc.

Recording Id 2RTR13-00146 **Procedure Id** INST-OI-12 **Revision** 52 **Approval Level** SPM

Is Test Pattern Resolution Ok? Yes **Start Side** A **Replicate** No **OIO** No

Audio Visual Ok? Yes **Operator** FKUCK

Result Comment Waste appears to be floor tile.
AK does not concur with the recommended IDC change from RF-371 to RF-374 for container 10229567 because RF-960 has been identified with this prefix. Instead, AK recommends an IDC of RF-960. CHD 10/29/13
Rework recommended IDC change from RF-371 to RF-960 per AK. dm 10/31/13
AK concurs with the recommended IDC change from RF-371 to RF-960 for container 10229567. AKR-12-768 was revised (R4) and attached to NCR 81871 to support this change. CHD 11/5/13

Package

IDC Correct Yes **Recommended IDC** RF-960 **Summary Category** S5000

Idc Change Reason Per AK.

Rigid Liner Present? No **LinerType** NO LINER

Liner Punctured? N/A **Sharp Objects?** No

Liner Lid Present? No **Sharp Objects Are Protected?** Yes

Liner Lid Deformed? N/A **Layers Of Confinement** 3

Fill Factor 75

Bag Closure Method Twisted and Taped

Liquids

Liquid Present? No **Internal Container with Liquid** No

Internal Container with Liquid 0 pints **LA Candidate** No

Liquid Between Liner & Drum 0 pints **Containerized Liquid**

Total Liquid Amount 0 pints **Containerized Liquid Amt** 0 pints

Other Liquids 0 pints **Comment**

Prohibited Liquids Present No **Comment**

Contents-Drum or Box

	Value	Comment		Value	Comment
Lead?	No		Mercury Present?	No	
Wet Cell Batteries?	No		Explosives?	No	
Prohibited Compressed Gases?	No		PCBs Present?	No	
Aerosol Cans?	No		PCB Mass (lbs)	0	
Non-Mixed Hazardous Waste Present?	No		Sealed Containers Over 4L?	No	

Non-Radionuclide Pyrophoric Materials Present? No

Waste exhibiting the characteristics of Ignitability, Corrosivity or Reactivity Present? No

Wastes Incompatible with backfill, seal and panel closure materials, container and packaging materials,shipping container or other wastes? No

Impenetrable Dense Objects? No

Waste Material Items

Packaging Materials

Material Item	Quantity	Unit	Unit Wt(lbs)	Item Wt(lbs)
Drum plastic bag	2.000	EACH	1.000	2.000

Waste Items byWeight

Material Item	Quantity	Unit	Unit Wt(lbs)	Item Wt(lbs)
Cardboard liner	1.000	EACH	4.000	4.000
Plastic bag for waste	1.000	EACH	0.250	0.250

Waste Items by Volume

Material Item	Quantity	Unit	Unit Wt(lbs)	Item Wt(lbs)
Vermiculite (95 gm/liter) .125 lb/pint	8.000	PINTS	0.125	1.000

Batch Id RTR13-00241 **Container Id** 10229567 **Analysis Id** 0000092437

Waste Parameters

Waste Parameter	Remaining Weight %	Actual Weight Lbs
Iron-based Metals/Alloys	0.000	0.000
Aluminum-based Metals/Alloys	0.000	0.000
Other metals	0.000	0.000
Other Inorganic Materials	100.000	142.020
Cellulosics	0.000	4.000
Rubber	0.000	0.000
Plastic (Waste Materials)	0.000	0.250
Inorganic matrix	0.000	0.000
Organic matrix	0.000	0.000
Soils/gravel	0.000	0.000
Steel (packaging materials)	0.000	59.000
Plastic (packaging materials)	0.000	2.000
Cellulosics Packaging	0.000	0.000

Analysis Esignature History

Esig Approval Id	User Id	Esignature Date	Comment
2649336	CHINKLE	05-NOV-2013 05:41	Batch is promoted. chd 11/5/13
2647581	DMOORE	31-OCT-2013 13:35	rework
2646298	CHINKLE	29-OCT-2013 13:21	This batch is returned for rework. AK does not concur with the recommended IDC change for container 10229567. CHD 10/29/13
2638389	FKUCK	12-OCT-2013 16:57	

Batch Id RTR13-00241 **Container Id** 10328375 **Analysis Id** 0000092439

Container Type A drum, 55 Gallon Drum (17H) **Analysis Status** Pass

RTR Date 12-OCT-2013 17:25 **Gross Weight** 125.685 **Lbs.** **Net Weight** 64.685 **Lbs**

Equipment Z-213-106 **Waste Matrix Code** S5300 **IDC** RF-330 Paper and Rags-Dry

Recording Id 2RTR13-00146 **Procedure Id** INST-OI-12 **Revision** 52 **Approval Level** SPM

Is Test Pattern Resolution Ok? Yes **Start Side** A **Replicate** Yes **OIO** No

Audio Visual Ok? Yes **Operator** AATWELL

Result Comment Waste is primarily cellulosics in the form of PPE, paper and rags.

Package

IDC Correct Yes **Recommended IDC** **Summary Category** S5000

Idc Change Reason

Rigid Liner Present? No **LinerType** NO LINER

Liner Punctured? N/A **Sharp Objects?** No

Liner Lid Present? No **Sharp Objects Are Protected?** Yes

Liner Lid Deformed? N/A **Layers Of Confinement** 3

Fill Factor 90

Bag Closure Method Twisted and Taped

Liquids

Liquid Present? No **Internal Container with Liquid** No

Internal Container with Liquid 0 pints **LA Candidate** No

Liquid Between Liner & Drum 0 pints **Containerized Liquid**

Total Liquid Amount 0 pints **Containerized Liquid Amt** 0 pints

Other Liquids 0 pints **Comment**

Prohibited Liquids Present No **Comment**

Contents-Drum or Box

	Value	Comment		Value	Comment
Lead?	No		**Mercury Present?**	No	
Wet Cell Batteries?	No		**Explosives?**	No	
Prohibited Compressed Gases?	No		**PCBs Present?**	No	
Aerosol Cans?	No		**PCB Mass (lbs)**	0	
Non-Mixed Hazardous Waste Present?	No		**Sealed Containers Over 4L?**	No	

Non-Radionuclide Pyrophoric Materials Present? No

Waste exhibiting the characteristics of Ignitability, Corrosivity or Reactivity Present? No

Wastes Incompatible with backfill, seal and panel closure materials, container and packaging materials,shipping container or other wastes? No

Impenetrable Dense Objects? No

Waste Material Items

Packaging Materials

Material Item	Quantity	Unit	Unit Wt(lbs)	Item Wt(lbs)
Drum plastic bag	2.000	EACH	1.000	2.000

Waste Items byWeight

Material Item	Quantity	Unit	Unit Wt(lbs)	Item Wt(lbs)
Cardboard liner	1.000	EACH	4.000	4.000
Plastic bag for waste	1.000	EACH	0.250	0.250

Waste Items by Volume

Material Item	Quantity	Unit	Unit Wt(lbs)	Item Wt(lbs)
Oil-Dri (Inside 55 gal drum)	7.000	PINTS	0.420	2.940

Batch Id RTR13-00241 **Container Id** 10328375 **Analysis Id** 0000092439

Waste Parameters

Waste Parameter	Remaining Weight %	Actual Weight Lbs
Iron-based Metals/Alloys	0.000	0.000
Aluminum-based Metals/Alloys	0.000	0.000
Other metals	0.000	0.000
Other Inorganic Materials	0.000	2.940
Cellulosics	100.000	61.495
Rubber	0.000	0.000
Plastic (Waste Materials)	0.000	0.250
Inorganic matrix	0.000	0.000
Organic matrix	0.000	0.000
Soils/gravel	0.000	0.000
Steel (packaging materials)	0.000	59.000
Plastic (packaging materials)	0.000	2.000
Cellulosics Packaging	0.000	0.000

Analysis Esignature History

Esig Approval Id	User Id	Esignature Date	Comment
2638400	AATWELL	12-OCT-2013 17:25	

Batch Id RTR13-00241 **Container Id** 10342255 **Analysis Id** 0000092444

Container Type 425 drum, 55 Gallon (UN1A2/X425/S), DOT/WIPP approved **Analysis Status** Pass

RTR Date 13-OCT-2013 10:45 **Gross Weight** 297.675 Lbs. **Net Weight** 237.675 Lbs.

Equipment Z-213-106 **Waste Matrix Code** S5490 **IDC** RF-750 Pits 11 & 12 Debris

Recording Id 2RTR13-00146 **Procedure Id** INST-OI-12 **Revision** 52 **Approval Level** SPM

Is Test Pattern Resolution Ok? Yes **Start Side** A **Replicate** No **OIO** No

Audio Visual Ok? Yes **Operator** DMOORE

Result Comment Remaining waste appears to be broken cinder blocks and large concrete chunks.

Package

IDC Correct Yes **Recommended IDC** **Summary Category** S5000

Idc Change Reason

Rigid Liner Present? No **LinerType** NO LINER

Liner Punctured? N/A **Sharp Objects?** No

Liner Lid Present? No **Sharp Objects Are Protected?** Yes

Liner Lid Deformed? N/A **Layers Of Confinement** 2

Fill Factor 90

Bag Closure Method Twisted and Taped

Liquids

Liquid Present? No **Internal Container with Liquid** No

Internal Container with Liquid 0 pints **LA Candidate** No

Liquid Between Liner & Drum 0 pints **Containerized Liquid**

Total Liquid Amount 0 pints **Containerized Liquid Amt** 0 pints

Other Liquids 0 pints **Comment**

Prohibited Liquids Present No **Comment**

Contents-Drum or Box

	Value	Comment		Value	Comment
Lead?	No		**Mercury Present?**	No	
Wet Cell Batteries?	No		**Explosives?**	No	
Prohibited Compressed Gases?	No		**PCBs Present?**	No	
Aerosol Cans?	No		**PCB Mass (lbs)**	0	
Non-Mixed Hazardous Waste Present?	No		**Sealed Containers Over 4L?**	Yes	30 gallon unvented drum

Non-Radionuclide Pyrophoric Materials Present? No

Waste exhibiting the characteristics of Ignitability, Corrosivity or Reactivity Present? No

Wastes Incompatible with backfill, seal and panel closure materials, container and packaging materials,shipping container or other wastes? No

Impenetrable Dense Objects? No

Waste Material Items

Packaging Materials

Material Item	Quantity	Unit	Unit Wt(lbs)	Item Wt(lbs)
Drum plastic bag	1.000	EACH	1.000	1.000

Waste Items byWeight

Material Item	Quantity	Unit	Unit Wt(lbs)	Item Wt(lbs)
rebar pieces	1.000	EACH	5.000	5.000
30 gallon drum	1.000	EACH	30.000	30.000

Waste Items by Volume

Material Item	Quantity	Unit	Unit Wt(lbs)	Item Wt(lbs)

Batch Id RTR13-00241 **Container Id** 10342255 **Analysis Id** 0000092444

Waste Parameters

Waste Parameter	Remaining Weight %	Actual Weight Lbs
Iron-based Metals/Alloys	0.000	35.000
Aluminum-based Metals/Alloys	0.000	0.000
Other metals	0.000	0.000
Other Inorganic Materials	100.000	202.675
Cellulosics	0.000	0.000
Rubber	0.000	0.000
Plastic (Waste Materials)	0.000	0.000
Inorganic matrix	0.000	0.000
Organic matrix	0.000	0.000
Soils/gravel	0.000	0.000
Steel (packaging materials)	0.000	59.000
Plastic (packaging materials)	0.000	1.000
Cellulosics Packaging	0.000	0.000

Analysis Esignature History

Esig Approval Id	User Id	Esignature Date	Comment
2638506	DMOORE	13-OCT-2013 10:45	

Batch Id RTR13-00241 **Container Id** 10242835 **Analysis Id** 0000092446

Container Type A drum, 55 Gallon Drum (17H) **Analysis Status** Pass

RTR Date 13-OCT-2013 11:13 **Gross Weight** 114.660 **Lbs.** **Net Weight** 53.660 **Lbs**

Equipment Z-213-106 **Waste Matrix Code** S5300 **IDC** RF-337 Plastics, Teflon, Washables, PVC

Recording Id 2RTR13-00146 **Procedure Id** INST-OI-12 **Revision** 52 **Approval Level** SPM

Is Test Pattern Resolution Ok? Yes **Start Side** A **Replicate** No **OIO** No

Audio Visual Ok? Yes **Operator** DMOORE

Result Comment Remaining waste appears to be plastic sheeting, bagging, and tubing.

Package

IDC Correct Yes **Recommended IDC** **Summary Category** S5000

Idc Change Reason

Rigid Liner Present? No **LinerType** NO LINER

Liner Punctured? N/A **Sharp Objects?** No

Liner Lid Present? No **Sharp Objects Are Protected?** Yes

Liner Lid Deformed? N/A **Layers Of Confinement** 3

Fill Factor 95

Bag Closure Method Twisted and Taped

Liquids

Liquid Present? No **Internal Container with Liquid** No

Internal Container with Liquid 0 pints **LA Candidate** No

Liquid Between Liner & Drum 0 pints **Containerized Liquid**

Total Liquid Amount 0 pints **Containerized Liquid Amt** 0 pints

Other Liquids 0 pints **Comment**

Prohibited Liquids Present No **Comment**

Contents-Drum or Box

	Value	Comment		Value	Comment
Lead?	No		**Mercury Present?**	No	
Wet Cell Batteries?	No		**Explosives?**	No	
Prohibited Compressed Gases?	No		**PCBs Present?**	No	
Aerosol Cans?	No		**PCB Mass (lbs)**	0	
Non-Mixed Hazardous Waste Present?	No		**Sealed Containers Over 4L?**	No	

Non-Radionuclide Pyrophoric Materials Present? No

Waste exhibiting the characteristics of Ignitability, Corrosivity or Reactivity Present? No

Wastes Incompatible with backfill, seal and panel closure materials, container and packaging materials,shipping container or other wastes? No

Impenetrable Dense Objects? No

Waste Material Items

Packaging Materials

Material Item	Quantity	Unit	Unit Wt(lbs)	Item Wt(lbs)
Drum plastic bag	2.000	EACH	1.000	2.000

Waste Items byWeight

Material Item	Quantity	Unit	Unit Wt(lbs)	Item Wt(lbs)
tool, misc metals, zipper	1.000	EACH	3.000	3.000
cardboard rolls, paper, rags, PPE	1.000	EACH	6.000	6.000
Cardboard liner	1.000	EACH	4.000	4.000
Plastic bag for waste	1.000	EACH	0.250	0.250

Waste Items by Volume

Material Item	Quantity	Unit	Unit Wt(lbs)	Item Wt(lbs)
Vermiculite (95 gm/liter) .125 lb/pint	11.000	PINTS	0.125	1.380

Batch Id RTR13-00241 **Container Id** 10242835 **Analysis Id** 0000092446

Waste Parameters

Waste Parameter	Remaining Weight %	Actual Weight Lbs
Iron-based Metals/Alloys	0.000	3.000
Aluminum-based Metals/Alloys	0.000	0.000
Other metals	0.000	0.000
Other Inorganic Materials	0.000	1.380
Cellulosics	0.000	10.000
Rubber	0.000	0.000
Plastic (Waste Materials)	100.000	39.280
Inorganic matrix	0.000	0.000
Organic matrix	0.000	0.000
Soils/gravel	0.000	0.000
Steel (packaging materials)	0.000	59.000
Plastic (packaging materials)	0.000	2.000
Cellulosics Packaging	0.000	0.000

Analysis Esignature History

Esig Approval Id	User Id	Esignature Date	Comment
2638518	DMOORE	13-OCT-2013 11:13	

Batch Id RTR13-00241 **Container Id** 10320974 **Analysis Id** 0000092448

Container Type 425 drum, 55 Gallon (UN1A2/X425/S), DOT/WIPP approved **Analysis Status** Pass

RTR Date 13-OCT-2013 11:49 **Gross Weight** 324.135 **Lbs.** **Net Weight** 265.135 **Lbs.**

Equipment Z-213-106 **Waste Matrix Code** S5490 **IDC** RF-750 Pits 11 & 12 Debris

Recording Id 2RTR13-00146 **Procedure Id** INST-OI-12 **Revision** 52 **Approval Level** SPM

Is Test Pattern Resolution Ok? Yes **Start Side** A **Replicate** No **OIO** No

Audio Visual Ok? Yes **Operator** DMOORE

Result Comment Remaining waste appears to be large broken cinder block pieces.

Package

IDC Correct Yes **Recommended IDC** **Summary Category** S5000

Idc Change Reason

Rigid Liner Present? No **LinerType** NO LINER

Liner Punctured? N/A **Sharp Objects?** No

Liner Lid Present? No **Sharp Objects Are Protected?** Yes

Liner Lid Deformed? N/A **Layers Of Confinement** 1

Fill Factor 95

Bag Closure Method No Bags

Liquids

Liquid Present? No **Internal Container with Liquid** No

Internal Container with Liquid 0 pints **LA Candidate** No

Liquid Between Liner & Drum 0 pints **Containerized Liquid**

Total Liquid Amount 0 pints **Containerized Liquid Amt** 0 pints

Other Liquids 0 pints **Comment**

Prohibited Liquids Present No **Comment**

Contents-Drum or Box

	Value	Comment		Value	Comment
Lead?	No		**Mercury Present?**	No	
Wet Cell Batteries?	No		**Explosives?**	No	
Prohibited Compressed Gases?	No		**PCBs Present?**	No	
Aerosol Cans?	No		**PCB Mass (lbs)**	0	
Non-Mixed Hazardous Waste Present?	No		**Sealed Containers Over 4L?**	Yes	30 gallon sealed drum

Non-Radionuclide Pyrophoric Materials Present? No

Waste exhibiting the characteristics of Ignitability, Corrosivity or Reactivity Present? No

Wastes Incompatible with backfill, seal and panel closure materials, container and packaging materials,shipping container or other wastes? No

Impenetrable Dense Objects? No

Waste Material Items

Packaging Materials

Material Item	Quantity	Unit	Unit Wt(lbs)	Item Wt(lbs)

Waste Items byWeight

Material Item	Quantity	Unit	Unit Wt(lbs)	Item Wt(lbs)
bolts	1.000	EACH	2.000	2.000
plastic bagging	1.000	EACH	1.000	1.000
30 gallon drum	1.000	EACH	30.000	30.000

Waste Items by Volume

Material Item	Quantity	Unit	Unit Wt(lbs)	Item Wt(lbs)

Batch Id RTR13-00241 **Container Id** 10320974 **Analysis Id** 0000092448

Waste Parameters

Waste Parameter	Remaining Weight %	Actual Weight Lbs
Iron-based Metals/Alloys	0.000	32.000
Aluminum-based Metals/Alloys	0.000	0.000
Other metals	0.000	0.000
Other Inorganic Materials	100.000	232.135
Cellulosics	0.000	0.000
Rubber	0.000	0.000
Plastic (Waste Materials)	0.000	1.000
Inorganic matrix	0.000	0.000
Organic matrix	0.000	0.000
Soils/gravel	0.000	0.000
Steel (packaging materials)	0.000	59.000
Plastic (packaging materials)	0.000	0.000
Cellulosics Packaging	0.000	0.000

Analysis Esignature History

Esig Approval Id	User Id	Esignature Date	Comment
2638523	DMOORE	13-OCT-2013 11:49	

Batch Id RTR13-00241 **Container Id** 10181587 **Analysis Id** 0000092451

Container Type A drum, 55 Gallon Drum (17H) **Analysis Status** Pass

RTR Date 13-OCT-2013 13:35 **Gross Weight** 436.590 **Lbs.** **Net Weight** 360.590 **Lbs.**

Equipment Z-213-106 **Waste Matrix Code** S5490 **IDC** RF-960 Concrete, Asphalt, etc.

Recording Id 2RTR13-00146 **Procedure Id** INST-OI-12 **Revision** 52 **Approval Level** SPM

Is Test Pattern Resolution Ok? Yes **Start Side** A **Replicate** No **OIO** No

Audio Visual Ok? Yes **Operator** CBEEBE

Result Comment The remaining waste appears to be irregular shaped pieces of concrete. cb. (rework) Entered No into Impenetrable Dense Objects field. K.H. 11-09-13

Package

IDC Correct Yes **Recommended IDC** **Summary Category** S5000

Idc Change Reason

Rigid Liner Present? Yes **LinerType** TYPE 1

Liner Punctured? Yes **Sharp Objects?** No

Liner Lid Present? Yes **Sharp Objects Are Protected?** Yes

Liner Lid Deformed? No **Layers Of Confinement** 1

Fill Factor 85

Bag Closure Method Twisted and Taped

Liquids

Liquid Present? No **Internal Container with Liquid** No

Internal Container with Liquid 0 pints **LA Candidate** No

Liquid Between Liner & Drum 0 pints **Containerized Liquid**

Total Liquid Amount 0 pints **Containerized Liquid Amt** 0 pints

Other Liquids 0 pints **Comment**

Prohibited Liquids Present No **Comment**

Contents-Drum or Box

	Value	Comment		Value	Comment
Lead?	No		**Mercury Present?**	No	
Wet Cell Batteries?	No		**Explosives?**	No	
Prohibited Compressed Gases?	No		**PCBs Present?**	No	
Aerosol Cans?	No		**PCB Mass (lbs)**	0	
Non-Mixed Hazardous Waste Present?	No		**Sealed Containers Over 4L?**	No	

Non-Radionuclide Pyrophoric Materials Present? No

Waste exhibiting the characteristics of Ignitability, Corrosivity or Reactivity Present? No

Wastes Incompatible with backfill, seal and panel closure materials, container and packaging materials,shipping container or other wastes? No

Impenetrable Dense Objects? No

Waste Material Items

Packaging Materials

Material Item	Quantity	Unit	Unit Wt(lbs)	Item Wt(lbs)
90 mil liner	1.000	EACH	16.000	16.000
Drum plastic bag	1.000	EACH	1.000	1.000

Waste Items byWeight

Material Item	Quantity	Unit	Unit Wt(lbs)	Item Wt(lbs)

Waste Items by Volume

Material Item	Quantity	Unit	Unit Wt(lbs)	Item Wt(lbs)

Batch Id RTR13-00241 **Container Id** 10181587 **Analysis Id** 0000092451

Waste Parameters

Waste Parameter	Remaining Weight %	Actual Weight Lbs
Iron-based Metals/Alloys	0.000	0.000
Aluminum-based Metals/Alloys	0.000	0.000
Other metals	0.000	0.000
Other Inorganic Materials	100.000	360.590
Cellulosics	0.000	0.000
Rubber	0.000	0.000
Plastic (Waste Materials)	0.000	0.000
Inorganic matrix	0.000	0.000
Organic matrix	0.000	0.000
Soils/gravel	0.000	0.000
Steel (packaging materials)	0.000	59.000
Plastic (packaging materials)	0.000	17.000
Cellulosics Packaging	0.000	0.000

Analysis Esignature History

Esig Approval Id	User Id	Esignature Date	Comment
2651805	KHUGHES	09-NOV-2013 10:12	
2638543	CBEEBE	13-OCT-2013 13:36	

Batch Id RTR13-00241 **Container Id** 10342255 **Analysis Id** 0000092452

Container Type 425 drum, 55 Gallon (UN1A2/X425/S), DOT/WIPP approved **Analysis Status** Pass

RTR Date 13-OCT-2013 14:21 **Gross Weight** 297.675 **Lbs.** **Net Weight** 237.675 **Lbs.**

Equipment Z-213-106 **Waste Matrix Code** S5490 **IDC** RF-750 Pits 11 & 12 Debris

Recording Id 2RTR13-00146 **Procedure Id** INST-OI-12 **Revision** 52 **Approval Level** SPM

Is Test Pattern Resolution Ok? Yes **Start Side** A **Replicate** No **OIO** Yes

Audio Visual Ok? Yes **Operator** CBEEBE

Result Comment The remaining waste appears to be irregular shaped pieces of concrete. cb

Package

IDC Correct Yes **Recommended IDC** **Summary Category** S5000

Idc Change Reason

Rigid Liner Present? No **LinerType** NO LINER

Liner Punctured? N/A **Sharp Objects?** No

Liner Lid Present? No **Sharp Objects Are Protected?** Yes

Liner Lid Deformed? N/A **Layers Of Confinement** 2

Fill Factor 70

Bag Closure Method Twisted and Taped

Liquids

Liquid Present? No **Internal Container with Liquid** No

Internal Container with Liquid 0 pints **LA Candidate** No

Liquid Between Liner & Drum 0 pints **Containerized Liquid**

Containerized Liquid Amt 0 pints

Total Liquid Amount 0 pints

Other Liquids 0 pints **Comment**

Prohibited Liquids Present No **Comment**

Contents-Drum or Box

	Value	Comment		Value	Comment
Lead?	No		**Mercury Present?**	No	
Wet Cell Batteries?	No		**Explosives?**	No	
Prohibited Compressed Gases?	No		**PCBs Present?**	No	
Aerosol Cans?	No		**PCB Mass (lbs)**	0	
Non-Mixed Hazardous Waste Present?	No		**Sealed Containers Over 4L?**	Yes	30 gallon drum with lid.

Non-Radionuclide Pyrophoric Materials Present? No

Waste exhibiting the characteristics of Ignitability, Corrosivity or Reactivity Present? No

Wastes Incompatible with backfill, seal and panel closure materials, container and packaging materials,shipping container or other wastes? No

Impenetrable Dense Objects? Yes - Unacceptable dense areas, appears to be concrete.

Waste Material Items

Packaging Materials

Material Item	Quantity	Unit	Unit Wt(lbs)	Item Wt(lbs)
Drum plastic bag	1.000	EACH	1.000	1.000

Waste Items byWeight

Material Item	Quantity	Unit	Unit Wt(lbs)	Item Wt(lbs)
Scrap metal rebar.	1.000	EACH	8.000	8.000
30 gallon drum with lid	1.000	EACH	30.000	30.000

Waste Items by Volume

Material Item	Quantity	Unit	Unit Wt(lbs)	Item Wt(lbs)

Batch Id RTR13-00241 **Container Id** 10342255 **Analysis Id** 0000092452

Waste Parameters

Waste Parameter	Remaining Weight %	Actual Weight Lbs
Iron-based Metals/Alloys	0.000	38.000
Aluminum-based Metals/Alloys	0.000	0.000
Other metals	0.000	0.000
Other Inorganic Materials	100.000	199.675
Cellulosics	0.000	0.000
Rubber	0.000	0.000
Plastic (Waste Materials)	0.000	0.000
Inorganic matrix	0.000	0.000
Organic matrix	0.000	0.000
Soils/gravel	0.000	0.000
Steel (packaging materials)	0.000	59.000
Plastic (packaging materials)	0.000	1.000
Cellulosics Packaging	0.000	0.000

RTR Independent Observation

Obsolete	Performed	User Name	Checklist	Answer
No	08-NOV-2013 12:04	MSORENSON	1.Was an independent observation performed?	Yes
			2.Were all items on the recording media identified correctly in WTS?	Yes
			3.Do you agree with the operator?	No

Comment The OIO operator identified the waste as impenetrable. I agree withe the Original operator the waste was penetrated sufficiently to verify the contents and the absence of unidentified prohibited items.

Independent Observation Esignature History

Esig Approval Id	User Id	Esignature Date	Comment
2651215	MSORENSON	08-NOV-2013 12:04	OIO complete.

Analysis Esignature History

Esig Approval Id	User Id	Esignature Date	Comment
2638558	CBEEBE	13-OCT-2013 14:21	

Batch Id RTR13-00241 **Container Id** 10000028 **Analysis Id** 0000092455

Container Type 001 drum, 55 Gallon (17C) **Analysis Status** Pass

RTR Date 13-OCT-2013 15:27 **Gross Weight** 127.890 **Lbs.** **Net Weight** 51.890 **Lbs**

Equipment Z-213-106 **Waste Matrix Code** S5410 **IDC** RF-376 Cemented Insulation and Filter Media

Recording Id 2RTR13-00146 **Procedure Id** INST-OI-12 **Revision** 52 **Approval Level** SPM

Is Test Pattern Resolution Ok? Yes **Start Side** A **Replicate** No **OIO** No

Audio Visual Ok? Yes **Operator** CBEEBE

Result Comment The remaining waste appears to be filter media with wooden frames.cb.

Package

IDC Correct Yes **Recommended IDC** **Summary Category** S5000

Idc Change Reason

Rigid Liner Present? Yes **LinerType** TYPE 3

Liner Punctured? Yes **Sharp Objects?** No

Liner Lid Present? Yes **Sharp Objects Are Protected?** Yes

Liner Lid Deformed? No **Layers Of Confinement** 2

Fill Factor 45

Bag Closure Method Twisted and Taped

Liquids

Liquid Present? No **Internal Container with Liquid** No

Internal Container with Liquid 0 pints **LA Candidate** No

Liquid Between Liner & Drum 0 pints **Containerized Liquid**

Total Liquid Amount 0 pints **Containerized Liquid Amt** 0 pints

Other Liquids 0 pints **Comment**

Prohibited Liquids Present No **Comment**

Contents-Drum or Box

	Value	Comment		Value	Comment
Lead?	Yes, Acceptable	leaded tape	**Mercury Present?**	No	
Wet Cell Batteries?	No		**Explosives?**	No	
Prohibited Compressed Gases?	No		**PCBs Present?**	No	
Aerosol Cans?	No		**PCB Mass (lbs)**	0	
Non-Mixed Hazardous Waste Present?	No		**Sealed Containers Over 4L?**	No	

Non-Radionuclide Pyrophoric Materials Present? No

Waste exhibiting the characteristics of Ignitability, Corrosivity or Reactivity Present? No

Wastes Incompatible with backfill, seal and panel closure materials, container and packaging materials,shipping container or other wastes? No

Impenetrable Dense Objects? No

Waste Material Items

Packaging Materials

Material Item	Quantity	Unit	Unit Wt(lbs)	Item Wt(lbs)
90 mil liner	1.000	EACH	16.000	16.000
Drum plastic bag	1.000	EACH	1.000	1.000

Waste Items byWeight

Material Item	Quantity	Unit	Unit Wt(lbs)	Item Wt(lbs)
Insulation	1.000	EACH	5.000	5.000
Plastic sheeting, plastic bagging	1.000	EACH	4.000	4.000
Leaded tape	1.000	EACH	0.130	0.130
Plastic bag for waste	1.000	EACH	0.250	0.250

Waste Items by Volume

Material Item	Quantity	Unit	Unit Wt(lbs)	Item Wt(lbs)

Batch Id RTR13-00241 **Container Id** 10000028 **Analysis Id** 0000092455

Waste Parameters

Waste Parameter	Remaining Weight %	Actual Weight Lbs
Iron-based Metals/Alloys	0.000	0.000
Aluminum-based Metals/Alloys	0.000	0.000
Other metals	0.000	0.130
Other Inorganic Materials	0.000	5.000
Cellulosics	100.000	42.510
Rubber	0.000	0.000
Plastic (Waste Materials)	0.000	4.250
Inorganic matrix	0.000	0.000
Organic matrix	0.000	0.000
Soils/gravel	0.000	0.000
Steel (packaging materials)	0.000	59.000
Plastic (packaging materials)	0.000	17.000
Cellulosics Packaging	0.000	0.000

Analysis Esignature History

Esig Approval Id	User Id	Esignature Date	Comment
2638593	CBEEBE	13-OCT-2013 15:30	
2638592	CBEEBE	13-OCT-2013 15:28	
2638591	CBEEBE	13-OCT-2013 15:27	

Batch Id RTR13-00241 **Container Id** 10027359 **Analysis Id** 0000092459

Container Type 001 drum, 55 Gallon (17C) **Analysis Status** Pass

RTR Date 13-OCT-2013 16:20 **Gross Weight** 141.120 Lbs. **Net Weight** 65.120 Lbs

Equipment Z-213-106 **Waste Matrix Code** S5490 **IDC** AW-160 AL/CL Debris Waste

Recording Id 2RTR13-00146 **Procedure Id** INST-OI-12 **Revision** 52 **Approval Level** SPM

Is Test Pattern Resolution Ok? Yes **Start Side** A **Replicate** No **OIO** No

Audio Visual Ok? Yes **Operator** CBEEBE

Result Comment The remaining waste appears to be plastic bagging, plastic sheeting, plastic tubing, gloveport support rings,ect.. cb.

Package

IDC Correct Yes **Recommended IDC** **Summary Category** S5000

Idc Change Reason

Rigid Liner Present? Yes **LinerType** TYPE 4

Liner Punctured? Yes **Sharp Objects?** No

Liner Lid Present? Yes **Sharp Objects Are Protected?** Yes

Liner Lid Deformed? No **Layers Of Confinement** 2

Fill Factor 80

Bag Closure Method Twisted and Taped

Liquids

Liquid Present? No **Internal Container with Liquid** No

Internal Container with Liquid 0 pints **LA Candidate** No

Liquid Between Liner & Drum 0 pints **Containerized Liquid**

Total Liquid Amount 0 pints **Containerized Liquid Amt** 0 pints

Other Liquids 0 pints **Comment**

Prohibited Liquids Present No **Comment**

Contents-Drum or Box

	Value	Comment		Value	Comment
Lead?	No		**Mercury Present?**	No	
Wet Cell Batteries?	No		**Explosives?**	No	
Prohibited Compressed Gases?	No		**PCBs Present?**	No	
Aerosol Cans?	No		**PCB Mass (lbs)**	0	
Non-Mixed Hazardous Waste Present?	No		**Sealed Containers Over 4L?**	No	

Non-Radionuclide Pyrophoric Materials Present? No

Waste exhibiting the characteristics of Ignitability, Corrosivity or Reactivity Present? No

Wastes Incompatible with backfill, seal and panel closure materials, container and packaging materials,shipping container or other wastes? No

Impenetrable Dense Objects? No

Waste Material Items

Packaging Materials

Material Item	Quantity	Unit	Unit Wt(lbs)	Item Wt(lbs)
90 mil liner	1.000	EACH	16.000	16.000
Drum plastic bag	1.000	EACH	1.000	1.000

Waste Items byWeight

Material Item	Quantity	Unit	Unit Wt(lbs)	Item Wt(lbs)
Scrap metal, screws,wire brushes,bands,ect..	1.000	EACH	2.000	2.000
Paper & rags, towels, wipes, ect..	1.000	EACH	8.000	8.000
Small graphite cap	1.000	EACH	0.250	0.250
Plastic bag for waste	1.000	EACH	0.250	0.250

Waste Items by Volume

Material Item	Quantity	Unit	Unit Wt(lbs)	Item Wt(lbs)

Batch Id RTR13-00241 **Container Id** 10027359 **Analysis Id** 0000092459

Waste Parameters

Waste Parameter	Remaining Weight %	Actual Weight Lbs
Iron-based Metals/Alloys	0.000	2.000
Aluminum-based Metals/Alloys	0.000	0.000
Other metals	0.000	0.000
Other Inorganic Materials	0.000	0.250
Cellulosics	0.000	8.000
Rubber	0.000	0.000
Plastic (Waste Materials)	100.000	54.870
Inorganic matrix	0.000	0.000
Organic matrix	0.000	0.000
Soils/gravel	0.000	0.000
Steel (packaging materials)	0.000	59.000
Plastic (packaging materials)	0.000	17.000
Cellulosics Packaging	0.000	0.000

Analysis Esignature History

Esig Approval Id	User Id	Esignature Date	Comment
2638613	CBEEBE	13-OCT-2013 16:20	

Batch Id RTR13-00241 **Container Id** 10011694 **Analysis Id** 0000092460

Container Type 001 drum, 55 Gallon (17C) **Analysis Status** Pass

RTR Date 13-OCT-2013 16:47 **Gross Weight** 165.375 Lbs. **Net Weight** 89.375 Lbs

Equipment Z-213-106 **Waste Matrix Code** S5490 **IDC** AW-160 AL/CL Debris Waste

Recording Id 2RTR13-00146 **Procedure Id** INST-OI-12 **Revision** 52 **Approval Level** SPM

Is Test Pattern Resolution Ok? Yes **Start Side** A **Replicate** No **OIO** No

Audio Visual Ok? Yes **Operator** CBEEBE

Result Comment The remaining waste appears to be plastic sheeting, plastic bagging, gloveport support rings, plastic bottles. ect.. cb.

Package

IDC Correct Yes **Recommended IDC** **Summary Category** S5000

Idc Change Reason

Rigid Liner Present? Yes **LinerType** TYPE 4

Liner Punctured? Yes **Sharp Objects?** No

Liner Lid Present? Yes **Sharp Objects Are Protected?** Yes

Liner Lid Deformed? No **Layers Of Confinement** 2

Fill Factor 65

Bag Closure Method Twisted and Taped

Liquids

Liquid Present? No **Internal Container with Liquid** No

Internal Container with Liquid 0 pints **LA Candidate** No

Liquid Between Liner & Drum 0 pints **Containerized Liquid**

Total Liquid Amount 0 pints **Containerized Liquid Amt** 0 pints

Other Liquids 0 pints **Comment**

Prohibited Liquids Present No **Comment**

Contents-Drum or Box

	Value	Comment		Value	Comment
Lead?	No		**Mercury Present?**	No	
Wet Cell Batteries?	No		**Explosives?**	No	
Prohibited Compressed Gases?	No		**PCBs Present?**	No	
Aerosol Cans?	No		**PCB Mass (lbs)**	0	
Non-Mixed Hazardous Waste Present?	No		**Sealed Containers Over 4L?**	No	

Non-Radionuclide Pyrophoric Materials Present? No

Waste exhibiting the characteristics of Ignitability, Corrosivity or Reactivity Present? No

Wastes Incompatible with backfill, seal and panel closure materials, container and packaging materials,shipping container or other wastes? No

Impenetrable Dense Objects? No

Waste Material Items

Packaging Materials

Material Item	Quantity	Unit	Unit Wt(lbs)	Item Wt(lbs)
90 mil liner	1.000	EACH	16.000	16.000
Drum plastic bag	1.000	EACH	1.000	1.000

Waste Items byWeight

Material Item	Quantity	Unit	Unit Wt(lbs)	Item Wt(lbs)
Glass, lab wear,beakers,ect..	1.000	EACH	6.000	6.000
Scrap metal, cans, ect..	1.000	EACH	10.000	10.000
Rubber tubing,rubber gloves, ect..	1.000	EACH	8.000	8.000
Plastic bag for waste	1.000	EACH	0.250	0.250

Waste Items by Volume

Material Item	Quantity	Unit	Unit Wt(lbs)	Item Wt(lbs)
Oil-Dri (Inside 55 gal drum)	10.000	PINTS	0.420	4.200

Batch Id RTR13-00241 **Container Id** 10011694 **Analysis Id** 0000092460

Waste Parameters

Waste Parameter	Remaining Weight %	Actual Weight Lbs
Iron-based Metals/Alloys	0.000	10.000
Aluminum-based Metals/Alloys	0.000	0.000
Other metals	0.000	0.000
Other Inorganic Materials	0.000	10.200
Cellulosics	0.000	0.000
Rubber	0.000	8.000
Plastic (Waste Materials)	100.000	61.175
Inorganic matrix	0.000	0.000
Organic matrix	0.000	0.000
Soils/gravel	0.000	0.000
Steel (packaging materials)	0.000	59.000
Plastic (packaging materials)	0.000	17.000
Cellulosics Packaging	0.000	0.000

Analysis Esignature History

Esig Approval Id	User Id	Esignature Date	Comment
2638635	CBEEBE	13-OCT-2013 16:47	

Batch Id RTR13-00241 **Container Id** 10330018 **Analysis Id** 0000092463

Container Type A drum, 55 Gallon Drum (17H) **Analysis Status** Pass

RTR Date 13-OCT-2013 17:28 **Gross Weight** 125.685 **Lbs.** **Net Weight** 64.685 **Lbs**

Equipment Z-213-106 **Waste Matrix Code** S5300 **IDC** RF-330 Paper and Rags-Dry

Recording Id 2RTR13-00146 **Procedure Id** INST-OI-12 **Revision** 52 **Approval Level** SPM

Is Test Pattern Resolution Ok? Yes **Start Side** A **Replicate** No **OIO** No

Audio Visual Ok? Yes **Operator** CBEEBE

Result Comment The remaining waste appears to be paper and rags,towels, wipes, tape rolls, PPE, ect.. cb.

Package

IDC Correct Yes **Recommended IDC** **Summary Category** S5000

Idc Change Reason

Rigid Liner Present? No **LinerType** NO LINER

Liner Punctured? N/A **Sharp Objects?** No

Liner Lid Present? No **Sharp Objects Are Protected?** Yes

Liner Lid Deformed? N/A **Layers Of Confinement** 3

Fill Factor 90

Bag Closure Method Twisted and Taped

Liquids

Liquid Present? No **Internal Container with Liquid** No

Internal Container with Liquid 0 pints **LA Candidate** No

Liquid Between Liner & Drum 0 pints **Containerized Liquid**

Total Liquid Amount 0 pints **Containerized Liquid Amt** 0 pints

Other Liquids 0 pints **Comment**

Prohibited Liquids Present No **Comment**

Contents-Drum or Box

	Value	Comment		Value	Comment
Lead?	No		**Mercury Present?**	No	
Wet Cell Batteries?	No		**Explosives?**	No	
Prohibited Compressed Gases?	No		**PCBs Present?**	No	
Aerosol Cans?	No		**PCB Mass (lbs)**	0	
Non-Mixed Hazardous Waste Present?	No		**Sealed Containers Over 4L?**	No	

Non-Radionuclide Pyrophoric Materials Present? No

Waste exhibiting the characteristics of Ignitability, Corrosivity or Reactivity Present? No

Wastes Incompatible with backfill, seal and panel closure materials, container and packaging materials,shipping container or other wastes? No

Impenetrable Dense Objects? No

Waste Material Items

Packaging Materials

Material Item	Quantity	Unit	Unit Wt(lbs)	Item Wt(lbs)
Drum plastic bag	2.000	EACH	1.000	2.000

Waste Items byWeight

Material Item	Quantity	Unit	Unit Wt(lbs)	Item Wt(lbs)
Scrap metal,insterment covers,ect..s	1.000	EACH	2.000	2.000
Plastic sheeting, plastic bagging,PPE,ect..	1.000	EACH	10.000	10.000
Plastic bag for waste	1.000	EACH	0.250	0.250

Waste Items by Volume

Material Item	Quantity	Unit	Unit Wt(lbs)	Item Wt(lbs)

Batch Id RTR13-00241 **Container Id** 10330018 **Analysis Id** 0000092463

Waste Parameters

Waste Parameter	Remaining Weight %	Actual Weight Lbs
Iron-based Metals/Alloys	0.000	2.000
Aluminum-based Metals/Alloys	0.000	0.000
Other metals	0.000	0.000
Other Inorganic Materials	0.000	0.000
Cellulosics	100.000	52.435
Rubber	0.000	0.000
Plastic (Waste Materials)	0.000	10.250
Inorganic matrix	0.000	0.000
Organic matrix	0.000	0.000
Soils/gravel	0.000	0.000
Steel (packaging materials)	0.000	59.000
Plastic (packaging materials)	0.000	2.000
Cellulosics Packaging	0.000	0.000

Analysis Esignature History

Esig Approval Id	User Id	Esignature Date	Comment
2638652	CBEEBE	13-OCT-2013 17:28	

End of RTR Analysis Report

AMWTP

Advanced Mixed Waste Treatment Project

AMWTP

RTR Replicate Comparison Report

Date: 11-Sep-2014

Time: 05:59

RTR Batch Id: RTR13-00241 **Container Id:** 10328375 **Equipment Id:** Z-213-106

Container type Description: **drum, 55 Gallon Drum (17H)** Gen-IDC: **RF-330** Gross Weight(Lbs): **125.685**

	Original Analysis		Replicate Analysis	
Analysis Id / Date:	0000092435	12-OCT-2013 16:41	0000092439	12-OCT-2013 17:25
Procedure /Revision:	INST-OI-12	52	INST-OI-12	52
Recording Media Id:	2RTR13-00146		2RTR13-00146	
Starting Position:	A		A	
Is Test Pattern Resolution Ok?	Y		Y	
Audio Visual Ok?	Y		Y	
Personnel Name:	FRANK KUCK		AARON ATWELL	
IDC Ok? / Recommended IDC:	Y		Y	
IDC Change Reason:				
Summary Category / Waste matrix Code:	S5000	S5300	S5000	S5300
Packaging				
Rigid Liner Present?	N		N	
Liner Type Code:	NO LINER		NO LINER	
Liner Punctured:	NA		NA	
Liner Lid Deformed:	NA		NA	
Layers Of Confinement:	3		3	
Sharp Objects?	N		N	
Sharp Objects Protected?	Y		Y	
Fill Factor(%):	95		90	
Bag Closure Method:	Twisted and Taped		Twisted and Taped	
Liner Lid Present?:	N		N	
Liquids: (Volume in Pints)				
Liquid Present?	N		N	
Internal Container with Liquid?	0		0	
Containerized Liquid	N		N	
Other Liquids:	0		0	
Internal Container with Liquid Amt:	0		0	
Liquid Between Liner and Drum:	0		0	
Containerized Liquid:	0		0	
Total Liquid Amount:	0		0	
LA Candidate?	N		N	
Prohibited Liquids Present	N		N	

Contents:	Y/N	Comments	Y/N	Comments
Sealed Containers over 4L?	N		N	
Lead Present?	N		N	
Explosives Present?	N		N	
Mercury Present?	N		N	
Wet Cell Batteries Detected?	N		N	

RTR Batch Id: RTR13-00241 **Container Id:** 10328375 **Equipment Id:** Z-213-106

	Original Analysis	Replicate Analysis
Prohibited Compressed Gas Present?	N	N
PCBs Present?	N	N
PCB Mass (lbs)	0	0
Non-Radionuclide Pyrophoric Materials Present?	N	N
Waste exhibiting the characteristics of ignitability, Corrosivity or reactivity Present?	N	N
Non-Mixed Hazardous Waste Present?	N	N
Waste Incompatibles with backfill, Seal and panel closure materials, container and packaging material, shipping container or other wastes?	N	N
Impenetrable Dense Objects?	N	N
Result Comment:	Waste consists primarily of cloth coveralls.	Waste is primarily cellulosics in the form of PPE, paper and rags.

----------E-signature----------

Esig Approval ID	User ID	Signature Date	Comment
2651209	MSORENSON	08-NOV-13	Replicate comparison complete with no significant differences.

-----End of RTR Replicate Comparison Report-----

DIVIDER

PAGE

AMWTP
Advanced Mixed Waste Treatment Project

AMWTP

Batch Report Coversheet

Date: 11-Sep-2014

Time: 06:29

Batch Type Real Time Radiography
Batch Report No. RTR13-00280
Batch Id RTR13-00280
Open Date 09-NOV-13 17:03:25
Close Date 11-NOV-13 10:09:41
Batch Status AP
Test Facility Idaho AMWTP
Equipment Id Z-213-106 RTR Station Right (213-106)

Container Id	IDC	Analysis Id	Date Examined	QC Type	Analysis Status	Operator
10505620	RF-003	0000093269	09-NOV-13 17:03:25	Original	P	KRISANN HUGHES
10343052	RF-960	0000093272	09-NOV-13 17:32:31	Original	P	CINDY TIEGS
10505195	RF-002	0000093274	09-NOV-13 17:48:57	Original	P	CINDY TIEGS
10504872	RF-004	0000093275	10-NOV-13 11:04:50	Original	P	FRANK KUCK
10503132	RF-003	0000093277	10-NOV-13 11:19:14	Original	P	FRANK KUCK
10504398	RF-003	0000093278	10-NOV-13 11:39:26	Original	P	FRANK KUCK
10504407	RF-003	0000093280	10-NOV-13 11:57:51	Original	P	FRANK KUCK
10505148	RF-002	0000093281	10-NOV-13 12:29:19	Original	P	FRANK KUCK
10186411	RF-960	0000093283	10-NOV-13 12:48:27	Original	P	FRANK KUCK
10505188	RF-002	0000093286	10-NOV-13 14:32:01	Original	P	FRANK KUCK
10505202	RF-003	0000093288	10-NOV-13 14:45:55	Original	P	FRANK KUCK
10505183	RF-003	0000093290	10-NOV-13 15:32:11	Original	P	KRISANN HUGHES
10503133	RF-003	0000093291	10-NOV-13 15:46:13	Original	P	FRANK KUCK
10333668	SD-176	0000093292	10-NOV-13 16:07:36	Original	P	KRISANN HUGHES
10288576	RF-750	0000093293	10-NOV-13 16:22:28	Original	P	FRANK KUCK
10503133	RF-003	0000093295	10-NOV-13 16:48:51	Replicate / Duplicate	P	AARON ATWELL
10505183	RF-003	0000093296	10-NOV-13 17:03:32	RTR OIO	P	AARON ATWELL
10503134	RF-337	0000093297	10-NOV-13 17:47:34	Original	P	FRANK KUCK
10503128	RF-003	0000093298	11-NOV-13 08:44:40	Original	P	KRISANN HUGHES
10504408	RF-001	0000093300	11-NOV-13 08:57:10	Original	P	KENT KEARN
10504979	RF-001	0000093302	11-NOV-13 09:53:51	Original	P	KENT KEARN
10504457	RF-002	0000093303	11-NOV-13 10:08:40	Original	P	KENT KEARN

INFORMATION ONLY

**********Batch Comments**********

Written By	Date	Comment
CHINKLE	12-NOV-13 13:44:10	12-NOV-13 CHINKLE AKE This batch is returned for rework. AK does not concur with the recommended IDC change for container 10343052. CHD 11/12/13
CTIEGS	16-NOV-13 14:07:44	rework complete.
CHINKLE	20-NOV-13 13:32:57	12-NOV-13 CHINKLE AKE This batch is returned for rework. AK does not concur with the recommended IDC change for container 10343052. CHD 11/12/13 20-NOV-13 CHINKLE AKE Batch is promoted. chd 11/20/13
MSORENSON	30-NOV-13 11:42:23	This batch is being validated electronically per MP-TRUW-8.8.
MSORENSON	30-NOV-13 17:41:59	Rework container 10503128. Please update the PCB mass to 462.38.
MSORENSON	30-NOV-13 17:41:59	Rework container 10333668. Please answer impenetrable dense objects Yes unacceptable for impenetrable waste. Information only- NCR # 82550 has been initiated for the impenetrable waste.
MSORENSON	30-NOV-13 17:41:59	Information only- Container 10505148. The operator added a drum bag to waste items by weight but could not identify a closure method therefore layers of confinement and closure method are correct. No rework will be necessary.
MSORENSON	30-NOV-13 17:41:59	Demote container 10505620 to populate IDC on BDR coversheet.
MSORENSON	30-NOV-13 17:45:23	Rework container 10505183 analysis Id 0000093290 (original to the OIO). Please update Other liquids and liquid for organic matrix to 3 pints and update the liquids present comment to 3 pints at the bottom of the waste.
MSORENSON	30-NOV-13 17:50:56	Demote to operations for rework.
KHUGHES	03-DEC-13 15:55:42	completed rework
MSORENSON	03-DEC-13 16:03:25	Information only- Container 10504979. NCR # 82714 was initiated for impenetrable objects due to the Lead liner.
MSORENSON	03-DEC-13 16:04:54	Rework appears to be completed satisfactorily. Promote to SPM.
DMARQUARDT	09-DEC-13 13:29:10	ITR checklist question # 19. The date entered for the OIO examination is incorrect. The exam was run on the 10th of November. Please review and correct as necessary.
DMARQUARDT	09-DEC-13 13:29:10	Demote to ITR for rework.
MSORENSON	09-DEC-13 13:45:54	Corrected checklist question #19. Promote to SPM
DMARQUARDT	09-DEC-13 15:11:39	Reviewed and validated. Approve.
DMARQUARDT	09-DEC-13 15:11:39	Reviewed rework. Acceptable. Promote.

AMWTP
Advanced Mixed Waste Treatment Project

AMWTP

Batch Report Coversheet

Date: 11-Sep-2014

Time: 06:29

**********Batch E-Signature History**********

Approval ID	User ID	Signature Date	Comment
2655689	CTIEGS	16-NOV-2013 14:07:44	rework complete.
2661468	MSORENSON	30-NOV-2013 17:50:56	Demote to operations for rework.
2664533	KHUGHES	03-DEC-2013 15:55:43	completed rework
2664546	MSORENSON	03-DEC-2013 16:04:54	Rework appears to be completed satisfactorily. Promote to SPM.
2666950	DMARQUARDT	09-DEC-2013 13:29:10	Demote to ITR for rework.
2666982	MSORENSON	09-DEC-2013 13:45:54	Corrected checklist question #19. Promote to SPM
2667096	DMARQUARDT	09-DEC-2013 15:11:39	Reviewed and validated. Approve.

***** End of Batch Report Coversheet Report *****

AMWTP
Advanced Mixed Waste Treatment Project

AMWTP

Non-Conformance Report

Date: 11-Sep-2014
Time: 06:30

*****Batch NCR(s)*****

Batch Type	RTR	Batch ID	RTR13-00280		
Trackwise Number		**Status**	**Opened Date**	**Closed Date**	

*****Container NCR(s)*****

Container ID *or related Batch ID*	Trackwise Number	Status	Opened Date	Closed Date
10186411	78310	CLOSED	10-JUN-13	09-DEC-13
10186411	82029	CLOSED	10-NOV-13	29-MAY-14
10333668	81328	CLOSED	16-OCT-13	17-DEC-13
10333668	82550	OPEN	30-NOV-13	
10343052	82020	OPEN	09-NOV-13	
10343052	82215	CLOSED	18-NOV-13	17-DEC-13
10503132	82023	CLOSED	10-NOV-13	29-APR-14
10503134	82087	CLOSED	12-NOV-13	17-DEC-13
10504398	82025	CLOSED	10-NOV-13	29-APR-14
10504407	82026	CLOSED	10-NOV-13	29-APR-14
10504979	82046	OPEN	11-NOV-13	
10504979	82714	OPEN	03-DEC-13	
10505148	82027	CLOSED	10-NOV-13	20-JAN-14
10505183	82032	CLOSED	10-NOV-13	29-APR-14
10505195	82021	CLOSED	09-NOV-13	20-JAN-14
10288576	83905	OPEN	19-FEB-14	
10504457	84702	CLOSED	18-MAR-14	08-AUG-14
10505188	84702	CLOSED	18-MAR-14	08-AUG-14

*****End of Non-Conformance Report*****

AMWTP
Advanced Mixed Waste Treatment Project

AMWTP

Checklist Report

Date: 11-Sep-2014

Time: 06:30

Batch Id RTR13-00280 **Open Date** 09-NOV-13 **Close Date** 11-NOV-13

Reviewer MARK SORENSON **Approval Level** Independent Technical Reviewer

Approval Date 30-NOV-13 **Review Iteration** 1

Question Text	Answer	Requirement	Comment
1. Is the Batch Data Report (BDR) and Quality Assurance (QA) documentation complete with the following: o Real-Time Radiography (RTR) Batch Coversheet o Table of Contents (manual review only) o RTR Analysis reports o Replicate Scan o Replicate Comparison o Independent Observation o ITR checklist (Form-1412, manual review only) o Form-1491, Batch Data Report Supplemental Comment Form (manual review only) o Associated NCRs (referenced in Waste Tracking System [WTS]) o Audio/Video Recording References?	Yes		
2. Are there 20 containers or less in the batch?	Yes		
3. Was the image quality indicator (IQI) satisfactory?	Yes		
4. Does every container in the batch reference an audio/video recording?	Yes		
5. Is there a completed radiography data analysis for each container in the batch?	Yes		
6. Was each RTR Operator qualified at the time of the radiography event?	Yes		
7. Was the data generated in a technically correct manner using the correct revision of INST-OI-12, Real-Time Radiography Operations (Drum)?	Yes		
8. Was the correct procedure and revision documented on all analysis reports?	Yes		
9. Has the E-signature History review been performed?	Yes		
10. Does the RTR operator confirm that the physical form matched the waste stream description and waste matrix code?	Yes		
11. Does the packaging weight plus the net weight equal the gross weight of the container in the estimated waste material parameters?	Yes		
12. Were all entries into the waste material items section assigned to the correct waste material parameters?	Yes		
13. Has the description of rigid liners and layers of confinement been properly documented, as applicable?	Yes		
14. Was the presence or absence of prohibited items properly documented?	Yes		
15. If prohibited items were identified, have appropriate nonconformance reports (NCRs) been generated?	Yes		
16. Were the containers examined between October and April in compliance with the preheat requirements?	Yes		
17. Were all proper units and significant figures used for all reported volumes/weights?	Yes		
18. Was there a valid replicate scan performed (at least one container per day, or once per testing batch, whichever is less frequent)? o Record the container number, the replicate observation date in the comment section of this checklist. o Record any issues or concerns in the batch comment section.	Yes		The Replicate exam was performed by a qualified operator on drum # 10503133 on 11/10/2013. The only differences between the exams were minor differences in fill factor estimates. The original operator also identified 12 pints of Oil-Dri absorbent and the replicate operator identified no Oil-Di absorbent. I agree with the original operator. These differences do not affect the DQOs or disposition of the container.
19. Was there a valid Operator Independent Observation	Yes		The OIO was performed by a qualified operator on

Batch Id RTR13-00280 **Open Date** 09-NOV-13 **Close Date** 11-NOV-13

Reviewer MARK SORENSON **Approval Level** Independent Technical Reviewer

Approval Date 30-NOV-13 **Review Iteration** 1

Question Text	Answer	Requirement	Comment
(OIO) (not the replicate) performed (at least one container per day, or once per testing batch, whichever is less frequent)? o Record the container number and the OIO date in the comment section of this checklist. o Record any issues or concerns in the batch comment section.			drum # 10505183 on 11/20/2013. The differences between the exams were the original operator identified 5 pints of liquid and 8 pints of oil-dri absorbent. The replicate operator identified 3 pints of liquid and no oil-dri absorbent. There was also a minor difference in fill factor estimates. I agree with the replicate operator on the liquid estimate and the original operator on all other items. The original exam will be reworked. These differences do not affect the DQO.s or disposition of the container. Any amount of liquid in a PCB identified waste stream is prohibited.
20. Were any significant differences identified that would affect the original disposition of the replicate and OIO, or affect data quality objectives (DQOs)? If so, ensure an NCR was generated and WTS flagged.	No		
21. Were the RTR quality assurance objectives (QAOs) met? o Precision o Accuracy o Completeness o Comparability	Yes		
22. Were any NCRs generated for containers containing prohibited items, or any non-conforming conditions that failed to meet DQOs or QAOs? o If so, include the NCRs, as appropriate, in the BDR.	Yes		
23. Were the rework requirements clearly identified in WTS or on the BDR?	Yes		See Batch comments.

Batch Id RTR13-00280 **Open Date** 09-NOV-13 **Close Date** 11-NOV-13

Reviewer MARK SORENSON **Approval Level** Independent Technical Reviewer

Approval Date 03-DEC-13 **Review Iteration** 2

Question Text	Answer	Requirement	Comment
1. Is the Batch Data Report (BDR) and Quality Assurance (QA) documentation complete with the following: o Real-Time Radiography (RTR) Batch Coversheet o Table of Contents (manual review only) o RTR Analysis reports o Replicate Scan o Replicate Comparison o Independent Observation o ITR checklist (Form-1412, manual review only) o Form-1491, Batch Data Report Supplemental Comment Form (manual review only) o Associated NCRs (referenced in Waste Tracking System [WTS]) o Audio/Video Recording References?	Yes		
2. Are there 20 containers or less in the batch?	Yes		
3. Was the image quality indicator (IQI) satisfactory?	Yes		
4. Does every container in the batch reference an audio/video recording?	Yes		
5. Is there a completed radiography data analysis for each container in the batch?	Yes		
6. Was each RTR Operator qualified at the time of the radiography event?	Yes		
7. Was the data generated in a technically correct manner using the correct revision of INST-OI-12, Real-Time Radiography Operations (Drum)?	Yes		
8. Was the correct procedure and revision documented on all analysis reports?	Yes		
9. Has the E-signature History review been performed?	Yes		
10. Does the RTR operator confirm that the physical form matched the waste stream description and waste matrix code?	Yes		
11. Does the packaging weight plus the net weight equal the gross weight of the container in the estimated waste material parameters?	Yes		
12. Were all entries into the waste material items section assigned to the correct waste material parameters?	Yes		
13. Has the description of rigid liners and layers of confinement been properly documented, as applicable?	Yes		
14. Was the presence or absence of prohibited items properly documented?	Yes		
15. If prohibited items were identified, have appropriate nonconformance reports (NCRs) been generated?	Yes		
16. Were the containers examined between October and April in compliance with the preheat requirements?	Yes		
17. Were all proper units and significant figures used for all reported volumes/weights?	Yes		
18. Was there a valid replicate scan performed (at least one container per day, or once per testing batch, whichever is less frequent)? o Record the container number, the replicate observation date in the comment section of this checklist. o Record any issues or concerns in the batch comment section.	Yes		The Replicate exam was performed by a qualified operator on drum # 10503133 on 11/10/2013. The only differences between the exams were minor differences in fill factor estimates. The original operator also identified 12 pints of Oil-Dri absorbent and the replicate operator identified no Oil-Di absorbent. I agree with the original operator. These differences do not affect the DQOs or disposition of the container.
19. Was there a valid Operator Independent Observation	Yes		The OIO was performed by a qualified operator on

Batch Id RTR13-00280 **Open Date** 09-NOV-13 **Close Date** 11-NOV-13

Reviewer MARK SORENSON **Approval Level** Independent Technical Reviewer

Approval Date 03-DEC-13 **Review Iteration** 2

Question Text	Answer	Requirement	Comment
(OIO) (not the replicate) performed (at least one container per day, or once per testing batch, whichever is less frequent)? o Record the container number and the OIO date in the comment section of this checklist. o Record any issues or concerns in the batch comment section.			drum # 10505183 on 11/20/2013. The differences between the exams were the original operator identified 5 pints of liquid and 8 pints of oil-dri absorbent. The replicate operator identified 3 pints of liquid and no oil-dri absorbent. There was also a minor difference in fill factor estimates. I agree with the replicate operator on the liquid estimate and the original operator on all other items. The original exam will be reworked. These differences do not affect the DQO.s or disposition of the container. Any amount of liquid in a PCB identified waste stream is prohibited.
20. Were any significant differences identified that would affect the original disposition of the replicate and OIO, or affect data quality objectives (DQOs)? If so, ensure an NCR was generated and WTS flagged.	No		
21. Were the RTR quality assurance objectives (QAOs) met? o Precision o Accuracy o Completeness o Comparability	Yes		
22. Were any NCRs generated for containers containing prohibited items, or any non-conforming conditions that failed to meet DQOs or QAOs? o If so, include the NCRs, as appropriate, in the BDR.	Yes		
23. Were the rework requirements clearly identified in WTS or on the BDR?	Yes		See Batch comments.

Batch Id RTR13-00280 **Open Date** 09-NOV-13 **Close Date** 11-NOV-13

Reviewer MARK SORENSON **Approval Level** Independent Technical Reviewer

Approval Date 09-DEC-13 **Review Iteration** 3

Question Text	Answer	Requirement	Comment
1. Is the Batch Data Report (BDR) and Quality Assurance (QA) documentation complete with the following: o Real-Time Radiography (RTR) Batch Coversheet o Table of Contents (manual review only) o RTR Analysis reports o Replicate Scan o Replicate Comparison o Independent Observation o ITR checklist (Form-1412, manual review only) o Form-1491, Batch Data Report Supplemental Comment Form (manual review only) o Associated NCRs (referenced in Waste Tracking System [WTS]) o Audio/Video Recording References?	Yes		
2. Are there 20 containers or less in the batch?	Yes		
3. Was the image quality indicator (IQI) satisfactory?	Yes		
4. Does every container in the batch reference an audio/video recording?	Yes		
5. Is there a completed radiography data analysis for each container in the batch?	Yes		
6. Was each RTR Operator qualified at the time of the radiography event?	Yes		
7. Was the data generated in a technically correct manner using the correct revision of INST-OI-12, Real-Time Radiography Operations (Drum)?	Yes		
8. Was the correct procedure and revision documented on all analysis reports?	Yes		
9. Has the E-signature History review been performed?	Yes		
10. Does the RTR operator confirm that the physical form matched the waste stream description and waste matrix code?	Yes		
11. Does the packaging weight plus the net weight equal the gross weight of the container in the estimated waste material parameters?	Yes		
12. Were all entries into the waste material items section assigned to the correct waste material parameters?	Yes		
13. Has the description of rigid liners and layers of confinement been properly documented, as applicable?	Yes		
14. Was the presence or absence of prohibited items properly documented?	Yes		
15. If prohibited items were identified, have appropriate nonconformance reports (NCRs) been generated?	Yes		
16. Were the containers examined between October and April in compliance with the preheat requirements?	Yes		
17. Were all proper units and significant figures used for all reported volumes/weights?	Yes		
18. Was there a valid replicate scan performed (at least one container per day, or once per testing batch, whichever is less frequent)? o Record the container number, the replicate observation date in the comment section of this checklist. o Record any issues or concerns in the batch comment section.	Yes		The Replicate exam was performed by a qualified operator on drum # 10503133 on 11/10/2013. The only differences between the exams were minor differences in fill factor estimates. The original operator also identified 12 pints of Oil-Dri absorbent and the replicate operator identified no Oil-Di absorbent. I agree with the original operator. These differences do not affect the DQOs or disposition of the container.
19. Was there a valid Operator Independent Observation	Yes		The OIO was performed by a qualified operator on

Batch Id RTR13-00280 **Open Date** 09-NOV-13 **Close Date** 11-NOV-13

Reviewer MARK SORENSON **Approval Level** Independent Technical Reviewer

Approval Date 09-DEC-13 **Review Iteration** 3

Question Text	Answer	Requirement	Comment
(OIO) (not the replicate) performed (at least one container per day, or once per testing batch, whichever is less frequent)? o Record the container number and the OIO date in the comment section of this checklist. o Record any issues or concerns in the batch comment section.			drum # 10505183 on 11/10/2013. The differences between the exams were the original operator identified 5 pints of liquid and 8 pints of oil-dri absorbent. The replicate operator identified 3 pints of liquid and no oil-dri absorbent. There was also a minor difference in fill factor estimates. I agree with the replicate operator on the liquid estimate and the original operator on all other items. The original exam will be reworked. These differences do not affect the DQO.s or disposition of the container. Any amount of liquid in a PCB identified waste stream is prohibited.
20. Were any significant differences identified that would affect the original disposition of the replicate and OIO, or affect data quality objectives (DQOs)? If so, ensure an NCR was generated and WTS flagged.	No		
21. Were the RTR quality assurance objectives (QAOs) met? o Precision o Accuracy o Completeness o Comparability	Yes		
22. Were any NCRs generated for containers containing prohibited items, or any non-conforming conditions that failed to meet DQOs or QAOs? o If so, include the NCRs, as appropriate, in the BDR.	Yes		
23. Were the rework requirements clearly identified in WTS or on the BDR?	Yes		See Batch comments.

Batch Id RTR13-00280 **Open Date** 09-NOV-13 **Close Date** 11-NOV-13

Reviewer DAVE MARQUARDT **Approval Level** SPM Data Validation

Approval Date 09-DEC-13 **Review Iteration** 1

Question Text	Answer	Requirement	Comment
(1) Has the batch received a Data Generation Level Independent Technical Review?	Yes	MP-TRUW-8.2, C3-10b(1)	
(2) Is the Independent Technical Review checklist complete?	Yes	MP-TRUW-8.2, C3-10b(1)	
(3) When identified, were polychlorinated biphenyls (PCBs), mercury, lead, or other hazardous contaminants consistent with the waste stream acceptable knowledge (AK) Summary Report(s) and/or AK documentation?	Yes	MP-TRUW-8.2, C4-3	
(4) Are any ignitable, corrosive, or reactive wastes identified in this waste?	No	MP-TRUW-8.2, C4-3	
(5) Are the packaging configurations identified on the real-time radiography (RTR) consistent with the waste stream AK Summary Report(s) and/or AK documentation?	Yes	MP-TRUW-8.2, C4-3	
(6) Do the containers in this batch contain typical waste items consistent with waste stream AK Summary Report(s) and/or AK documentation?	Yes	MP-TRUW-8.2, C4-3	
(7) Are the Waste Matrix Codes (WMCs) and physical form descriptions consistent with AK?	Yes	MP-TRUW-8.2, C4-3	
(8) Have all AK discrepancies been resolved and have all AK Resolution checklists been approved? Reference all waste stream AK documentation used in review of this data package.	Yes	MP-TRUW-8.2, C4-3	RPT-TRUW-05, RPT-TRUW-06, RPT-TRUW-12, RPT-TRUW-56. AKR-10-682-R8 AKR-10-701 R8
(9) Have all applicable Quality Assurance Objectives (QAOs) been met, including precision, accuracy, completeness, and comparability, by using the appropriate acceptance criteria for each as specified in MP-TRUW-8.2, Quality Assurance Project Plan Section C3-4? Precision ¿ Verified prior to use by tuning precisely enough to demonstrate compliance with QAOs through viewing an image test pattern, as evidenced by a satisfactory Image Quality Indicator (IQI). ¿ Have discrepancies, if any, between radiography operators been reconciled? Accuracy ¿ Use of a target to tune the image for maximum sharpness as evidenced by a satisfactory IQI and by requiring operators to successfully identify 100% of the required items in a training container during initial and subsequent qualifications. Completeness ¿ An audio/videotape (or equivalent media) of the radiography examination and a validated radiography data form will be obtained for 100% of the retrievably stored waste container in the program for all waste containers subject to radiography. Comparability ¿ Use of standardized radiography procedures and operator qualifications.	Yes	MP-TRUW-8.2, C3-4a	
(10) Do the waste container contents match the WMC, waste stream description and identify the absence of prohibited items?	Yes	MP-TRUW-8.2, C1-3 and B3-11	
(11) If residual liquids exist in the container, is an estimate of quantity given?	Yes	MP-TRUW-8.2, C1-3	
(12) Do the individual container reports contain the (a) IDC, (b) Waste Matrix Code, (c) audio/video recording reference, (d) gross container weight, (e) waste material parameter weights, and (f) signature and date of examination?	Yes	MP-TRUW-8.2, C1-3 and C3-11a	
(13) Have the IDC, WMC, and/or waste stream for all	No	MP-TRUW-8.2, C1-3 and	Drum 10343052 received an IDC change per

Batch Id RTR13-00280 **Open Date** 09-NOV-13 **Close Date** 11-NOV-13

Reviewer DAVE MARQUARDT **Approval Level** SPM Data Validation

Approval Date 09-DEC-13 **Review Iteration** 1

Question Text	Answer	Requirement	Comment
containers in the batch remained the same as originally assigned by the historical designation? If not, note the container number in the comment field and notify the Acceptable Knowledge Expert (AKE) if NCR does not exist on the WMC and IDC change.		C3-4a	AKR-10-682 R8. Drum 10503134 received an IDC change per AKR-10-701-R8.
(14) Was a replicate scan performed by an independent operator on at least one container per day or once per testing batch, whichever is less frequent, by a qualified radiography operator that was not involved in the original scan of the waste container?	Yes	MP-TRUW-8.2, B1-3, C3-4a, and C3-10b(1)	
(15) Has an independent observation of one scan (not the replicate) been performed by a qualified operator that was not involved in the original scan of the waste container, at a rate of once per day or once per batch, whichever is less frequent? Record date of observation and any issues or concerns in the comment section.	Yes	MP-TRUW-8.2, C1-3 and C3-4a	The OIO was performed by a qualified operator on drum # 10505183 on 11/10/2013. No issues.
(16) Did personnel having current qualifications perform all RTR examinations?	Yes	MP-TRUW-8.1, Appendix F	
(17) Verify the correct procedure and revision number were used for all containers in this batch.	Yes	MP-TRUW-8.2, C3-4a	
(18) Verify the audio and video checks were performed and are satisfactory.	Yes	MP-TRUW-8.2, C3-4a	
(19) Verify that there are 20 or fewer containers in the batch.	Yes	MP-TRUW-8.2, C1-3	
(20) Does the data for all containers within this batch meet the review, validation, and verification requirements? · Are proper units (e.g. Liters or pounds) and significant figure used? · Is the BDR complete (all pages identified in the BDR and numbered accordingly)? - RTR Batch Coversheet - Table of Contents (manual review only) - RTR Analysis reports - Replicate Scan - Replicate Comparison - Independent Observation - Form-1412, ITR checklist - Associated NCRs - Form, 1491, Batch Data Report Supplemental Comment Form, as applicable - Audio/Video Recording References	Yes	MP-TRUW-8.2, C3 10b(2)	
(21) Review all NCR(s) (open and closed). Can the batch be approved?	Yes	MP-TRUW-8.2, C3-13	
(22) Is all data associated with this BDR acceptable for signature release?	No	MP-TRUW-8.2, C3 10b(2)	See SPM batch comment.

Batch Id RTR13-00280 **Open Date** 09-NOV-13 **Close Date** 11-NOV-13

Reviewer DAVE MARQUARDT **Approval Level** SPM Data Validation

Approval Date 09-DEC-13 **Review Iteration** 2

Question Text	Answer	Requirement	Comment
(1) Has the batch received a Data Generation Level Independent Technical Review?	Yes	MP-TRUW-8.2, C3-10b(1)	
(2) Is the Independent Technical Review checklist complete?	Yes	MP-TRUW-8.2, C3-10b(1)	
(3) When identified, were polychlorinated biphenyls (PCBs), mercury, lead, or other hazardous contaminants consistent with the waste stream acceptable knowledge (AK) Summary Report(s) and/or AK documentation?	Yes	MP-TRUW-8.2, C4-3	
(4) Are any ignitable, corrosive, or reactive wastes identified in this waste?	No	MP-TRUW-8.2, C4-3	
(5) Are the packaging configurations identified on the real-time radiography (RTR) consistent with the waste stream AK Summary Report(s) and/or AK documentation?	Yes	MP-TRUW-8.2, C4-3	
(6) Do the containers in this batch contain typical waste items consistent with waste stream AK Summary Report(s) and/or AK documentation?	Yes	MP-TRUW-8.2, C4-3	
(7) Are the Waste Matrix Codes (WMCs) and physical form descriptions consistent with AK?	Yes	MP-TRUW-8.2, C4-3	
(8) Have all AK discrepancies been resolved and have all AK Resolution checklists been approved? Reference all waste stream AK documentation used in review of this data package.	Yes	MP-TRUW-8.2, C4-3	RPT-TRUW-05, RPT-TRUW-06, RPT-TRUW-12, RPT-TRUW-56. AKR-10-682-R8 AKR-10-701 R8
(9) Have all applicable Quality Assurance Objectives (QAOs) been met, including precision, accuracy, completeness, and comparability, by using the appropriate acceptance criteria for each as specified in MP-TRUW-8.2, Quality Assurance Project Plan Section C3-4? Precision ¿ Verified prior to use by tuning precisely enough to demonstrate compliance with QAOs through viewing an image test pattern, as evidenced by a satisfactory Image Quality Indicator (IQI). ¿ Have discrepancies, if any, between radiography operators been reconciled? Accuracy ¿ Use of a target to tune the image for maximum sharpness as evidenced by a satisfactory IQI and by requiring operators to successfully identify 100% of the required items in a training container during initial and subsequent qualifications. Completeness ¿ An audio/videotape (or equivalent media) of the radiography examination and a validated radiography data form will be obtained for 100% of the retrievably stored waste container in the program for all waste containers subject to radiography. Comparability ¿ Use of standardized radiography procedures and operator qualifications.	Yes	MP-TRUW-8.2, C3-4a	
(10) Do the waste container contents match the WMC, waste stream description and identify the absence of prohibited items?	Yes	MP-TRUW-8.2, C1-3 and B3-11	
(11) If residual liquids exist in the container, is an estimate of quantity given?	Yes	MP-TRUW-8.2, C1-3	
(12) Do the individual container reports contain the (a) IDC, (b) Waste Matrix Code, (c) audio/video recording reference, (d) gross container weight, (e) waste material parameter weights, and (f) signature and date of examination?	Yes	MP-TRUW-8.2, C1-3 and C3-11a	
(13) Have the IDC, WMC, and/or waste stream for all	No	MP-TRUW-8.2, C1-3 and	Drum 10343052 received an IDC change per

Batch Id RTR13-00280 **Open Date** 09-NOV-13 **Close Date** 11-NOV-13

Reviewer DAVE MARQUARDT **Approval Level** SPM Data Validation

Approval Date 09-DEC-13 **Review Iteration** 2

Question Text	Answer	Requirement	Comment
containers in the batch remained the same as originally assigned by the historical designation? If not, note the container number in the comment field and notify the Acceptable Knowledge Expert (AKE) if NCR does not exist on the WMC and IDC change.		C3-4a	AKR-10-682 R8. Drum 10503134 received an IDC change per AKR-10-701-R8.
(14) Was a replicate scan performed by an independent operator on at least one container per day or once per testing batch, whichever is less frequent, by a qualified radiography operator that was not involved in the original scan of the waste container?	Yes	MP-TRUW-8.2, B1-3, C3-4a, and C3-10b(1)	
(15) Has an independent observation of one scan (not the replicate) been performed by a qualified operator that was not involved in the original scan of the waste container, at a rate of once per day or once per batch, whichever is less frequent? Record date of observation and any issues or concerns in the comment section.	Yes	MP-TRUW-8.2, C1-3 and C3-4a	The OIO was performed by a qualified operator on drum # 10505183 on 11/10/2013. No issues.
(16) Did personnel having current qualifications perform all RTR examinations?	Yes	MP-TRUW-8.1, Appendix F	
(17) Verify the correct procedure and revision number were used for all containers in this batch.	Yes	MP-TRUW-8.2, C3-4a	
(18) Verify the audio and video checks were performed and are satisfactory.	Yes	MP-TRUW-8.2, C3-4a	
(19) Verify that there are 20 or fewer containers in the batch.	Yes	MP-TRUW-8.2, C1-3	
(20) Does the data for all containers within this batch meet the review, validation, and verification requirements? · Are proper units (e.g. Liters or pounds) and significant figure used? · Is the BDR complete (all pages identified in the BDR and numbered accordingly)? - RTR Batch Coversheet - Table of Contents (manual review only) - RTR Analysis reports - Replicate Scan - Replicate Comparison - Independent Observation - Form-1412, ITR checklist - Associated NCRs - Form, 1491, Batch Data Report Supplemental Comment Form, as applicable - Audio/Video Recording References	Yes	MP-TRUW-8.2, C3 10b(2)	
(21) Review all NCR(s) (open and closed). Can the batch be approved?	Yes	MP-TRUW-8.2, C3-13	
(22) Is all data associated with this BDR acceptable for signature release?	Yes	MP-TRUW-8.2, C3 10b(2)	

Batch Id RTR13-00280 **Open Date** 09-NOV-13 **Close Date** 11-NOV-13

Esignature History

Esig Approval ID	User ID	Esig Date	Approval Level	Comments
2667096	DMARQUARDT	09-DEC-13	SPM	Reviewed and validated. Approve.
2666982	MSORENSON	09-DEC-13	ITR	Corrected checklist question #19. Promote to SPM
2666950	DMARQUARDT	09-DEC-13	SPM	Demote to ITR for rework.
2664546	MSORENSON	03-DEC-13	ITR	Rework appears to be completed satisfactorily. Promote to SPM.
2661468	MSORENSON	30-NOV-13	ITR	Demote to operations for rework.

AMWTP
Advanced Mixed Waste Treatment Project

AMWTP

RTR Analysis Report

Date: 11-Sep-2014
Time: 06:31

Batch Id RTR13-00280 **Container Id** 10505620 **Analysis Id** 0000093269

Container Type 7A85 85 Gallon Open Head drum, DOT 7A **Analysis Status** Pass

RTR Date 09-NOV-2013 17:03 **Gross Weight** 637.245 **Lbs.** **Net Weight** 496.245 **Lbs**
Equipment Z-213-106 **Waste Matrix Code** S3114 **IDC** RF-003 Organic Setups, Oil Solids
Recording Id 2RTR13-00168 **Procedure Id** INST-OI-12 **Revision** 52 **Approval Level** SPM
Is Test Pattern Resolution Ok? Yes **Start Side** A **Replicate** No **OIO** No
Audio Visual Ok? Yes **Operator** CTIEGS

Result Comment Remaining waste appears to contain sludge.
AK concurs with the recommended IDC, RF-003, for container 10505620. The retrieval operator reports historical 743-10259, IDC RF-003. No AKR or NCR is necessary. CHD 11/12/13
Toggled to populate IDC field. K.H. 03DEC13

Package

IDC Correct Yes **Recommended IDC** **Summary Category** S3000
Idc Change Reason
Rigid Liner Present? No **LinerType** NO LINER
Liner Punctured? N/A **Sharp Objects?** No
Liner Lid Present? No **Sharp Objects Are Protected?** Yes
Liner Lid Deformed? N/A **Layers Of Confinement** 2
Fill Factor 98
Bag Closure Method Twisted and Taped

Liquids

Liquid Present? No **Internal Container with Liquid** No
Internal Container with Liquid 0 pints **LA Candidate** No
Liquid Between Liner & Drum 0 pints **Containerized Liquid**
Total Liquid Amount 0 pints **Containerized Liquid Amt** 0 pints
Other Liquids 0 pints **Comment**
Prohibited Liquids Present No **Comment**

Contents-Drum or Box

	Value	Comment		Value	Comment
Lead?	No		**Mercury Present?**	No	
Wet Cell Batteries?	No		**Explosives?**	No	
Prohibited Compressed Gases?	No		**PCBs Present?**	Yes - Acceptable	PCB IDC
Aerosol Cans?	No		**PCB Mass (lbs)**	496.25	
Non-Mixed Hazardous Waste Present?	No		**Sealed Containers Over 4L?**	No	

Non-Radionuclide Pyrophoric Materials Present? No
Waste exhibiting the characteristics of Ignitability, Corrosivity or Reactivity Present? No
Wastes Incompatible with backfill, seal and panel closure materials, container and packaging materials,shipping container or other wastes? No
Impenetrable Dense Objects? No

Waste Material Items

Packaging Materials

Material Item	Quantity	Unit	Unit Wt(lbs)	Item Wt(lbs)
Drum plastic bag	2.000	EACH	1.000	2.000
55-GAL DRUM (17c)	1.000	EACH	59.000	59.000

Waste Items byWeight

Material Item	Quantity	Unit	Unit Wt(lbs)	Item Wt(lbs)

Waste Items by Volume

Material Item	Quantity	Unit	Unit Wt(lbs)	Item Wt(lbs)

Batch Id RTR13-00280 **Container Id** 10505620 **Analysis Id** 0000093269

Waste Parameters

Waste Parameter	Remaining Weight %	Actual Weight Lbs
Iron-based Metals/Alloys	0.000	0.000
Aluminum-based Metals/Alloys	0.000	0.000
Other metals	0.000	0.000
Other Inorganic Materials	0.000	0.000
Cellulosics	0.000	0.000
Rubber	0.000	0.000
Plastic (Waste Materials)	0.000	0.000
Inorganic matrix	0.000	0.000
Organic matrix	100.000	496.245
Soils/gravel	0.000	0.000
Steel (packaging materials)	0.000	139.000
Plastic (packaging materials)	0.000	2.000
Cellulosics Packaging	0.000	0.000

Analysis Esignature History

Esig Approval Id	User Id	Esignature Date	Comment
2664511	KHUGHES	03-DEC-2013 15:34	
2653248	CHINKLE	12-NOV-2013 13:44	This batch is returned for rework. AK does not concur with the recommended IDC change for container 10343052. CHD 11/12/13
2651988	CTIEGS	09-NOV-2013 17:03	

Batch Id RTR13-00280 **Container Id** 10343052 **Analysis Id** 0000093272

Container Type C drum, 83 Gallon **Analysis Status** Pass

RTR Date 09-NOV-2013 17:32 **Gross Weight** 643.860 Lbs. **Net Weight** 499.860 Lbs.

Equipment Z-213-106 **Waste Matrix Code** S5490 **IDC** RF-960 Concrete, Asphalt, etc.

Recording Id 2RTR13-00168 **Procedure Id** INST-OI-12 **Revision** 52 **Approval Level** SPM

Is Test Pattern Resolution Ok? Yes **Start Side** A **Replicate** No **OIO** No

Audio Visual Ok? Yes **Operator** CTIEGS

Result Comment Remaining waste appears to contain concrete.
AK does not concur with the recommended IDC change from RF-330 to RF-374 for container 10343052 because historical pack date indicates that RF-960 is more accurate. Instead, AK recommends an IDC of RF-960. CHD 11/12/13
Rework, recommended IDC change from RF-330 to RF-960 per AK. CT 11/16/13
AK concurs with the recommended IDC change from RF-330 to RF-960 for container 10343052. AKR-10-682 was revised (R8) and attached to NCR 82215 to support this change. CHD 11/20/13

Package

IDC Correct Yes **Recommended IDC** RF-960 **Summary Category** S5000

Idc Change Reason waste appears to contain concrete.

Rigid Liner Present? No **LinerType** NO LINER

Liner Punctured? N/A **Sharp Objects?** No

Liner Lid Present? No **Sharp Objects Are Protected?** Yes

Liner Lid Deformed? N/A **Layers Of Confinement** 2

Fill Factor 90

Bag Closure Method Twisted and Taped

Liquids

Liquid Present? No **Internal Container with Liquid** No

Internal Container with Liquid 0 pints **LA Candidate** No

Liquid Between Liner & Drum 0 pints **Containerized Liquid**

Total Liquid Amount 0 pints **Containerized Liquid Amt** 0 pints

Other Liquids 0 pints **Comment**

Prohibited Liquids Present No **Comment**

Contents-Drum or Box

	Value	Comment		Value	Comment
Lead?	No		**Mercury Present?**	No	
Wet Cell Batteries?	No		**Explosives?**	No	
Prohibited Compressed Gases?	No		**PCBs Present?**	No	
Aerosol Cans?	No		**PCB Mass (lbs)**	0	
Non-Mixed Hazardous Waste Present?	No		**Sealed Containers Over 4L?**	No	

Non-Radionuclide Pyrophoric Materials Present? No

Waste exhibiting the characteristics of Ignitability, Corrosivity or Reactivity Present? No

Wastes Incompatible with backfill, seal and panel closure materials, container and packaging materials,shipping container or other wastes? No

Impenetrable Dense Objects? Yes - Unacceptable dense impenetrable waste.

Waste Material Items

Packaging Materials

Material Item	Quantity	Unit	Unit Wt(lbs)	Item Wt(lbs)
Drum plastic bag	2.000	EACH	1.000	2.000
55-GAL DRUM (17c)	1.000	EACH	59.000	59.000

Waste Items byWeight

Material Item	Quantity	Unit	Unit Wt(lbs)	Item Wt(lbs)
Cardboard liner	1.000	EACH	4.000	4.000

Waste Items by Volume

Material Item	Quantity	Unit	Unit Wt(lbs)	Item Wt(lbs)

Batch Id RTR13-00280 **Container Id** 10343052 **Analysis Id** 0000093272

Waste Parameters

Waste Parameter	Remaining Weight %	Actual Weight Lbs
Iron-based Metals/Alloys	0.000	0.000
Aluminum-based Metals/Alloys	0.000	0.000
Other metals	0.000	0.000
Other Inorganic Materials	100.000	495.860
Cellulosics	0.000	4.000
Rubber	0.000	0.000
Plastic (Waste Materials)	0.000	0.000
Inorganic matrix	0.000	0.000
Organic matrix	0.000	0.000
Soils/gravel	0.000	0.000
Steel (packaging materials)	0.000	142.000
Plastic (packaging materials)	0.000	2.000
Cellulosics Packaging	0.000	0.000

Analysis Esignature History

Esig Approval Id	User Id	Esignature Date	Comment
2657615	CHINKLE	20-NOV-2013 13:32	Batch is promoted. chd 11/20/13
2655688	CTIEGS	16-NOV-2013 14:05	rework
2653250	CHINKLE	12-NOV-2013 13:44	This batch is returned for rework. AK does not concur with the recommended IDC change for container 10343052. CHD 11/12/13
2651993	CTIEGS	09-NOV-2013 17:32	

Batch Id RTR13-00280 **Container Id** 10505195 **Analysis Id** 0000093274

Container Type C drum, 83 Gallon **Analysis Status** Pass

RTR Date 09-NOV-2013 17:48 **Gross Weight** 590.940 **Lbs.** **Net Weight** 447.940 **Lbs.**

Equipment Z-213-106 **Waste Matrix Code** S3121 **IDC** RF-002 Second Stage Sludge

Recording Id 2RTR13-00168 **Procedure Id** INST-OI-12 **Revision** 52 **Approval Level** SPM

Is Test Pattern Resolution Ok? Yes **Start Side** A **Replicate** No **OIO** No

Audio Visual Ok? Yes **Operator** CTIEGS

Result Comment Remaining waste appears to contain sludge.

Package

IDC Correct Yes **Recommended IDC** **Summary Category** S3000

Idc Change Reason

Rigid Liner Present? No **LinerType** NO LINER

Liner Punctured? N/A **Sharp Objects?** No

Liner Lid Present? No **Sharp Objects Are Protected?** Yes

Liner Lid Deformed? N/A **Layers Of Confinement** 1

Fill Factor 95

Bag Closure Method Twisted and Taped

Liquids

Liquid Present? Yes **Internal Container with Liquid** No

Internal Container with Liquid 0 pints **LA Candidate** No

Liquid Between Liner & Drum 0 pints **Containerized Liquid**

Total Liquid Amount 32 pints **Containerized Liquid Amt** 0 pints

Other Liquids 32 pints **Comment** liquid nine inches from bottom on side

Prohibited Liquids Present Yes **Comment** >1% by vol

Contents-Drum or Box

	Value	Comment		Value	Comment
Lead?	No		**Mercury Present?**	No	
Wet Cell Batteries?	No		**Explosives?**	No	
Prohibited Compressed Gases?	No		**PCBs Present?**	No	
Aerosol Cans?	No		**PCB Mass (lbs)**	0	
Non-Mixed Hazardous Waste Present?	No		**Sealed Containers Over 4L?**	No	

Non-Radionuclide Pyrophoric Materials Present? No

Waste exhibiting the characteristics of Ignitability, Corrosivity or Reactivity Present? No

Wastes Incompatible with backfill, seal and panel closure materials, container and packaging materials,shipping container or other wastes? No

Impenetrable Dense Objects? No

Waste Material Items

Packaging Materials

Material Item	Quantity	Unit	Unit Wt(lbs)	Item Wt(lbs)
Drum plastic bag	1.000	EACH	1.000	1.000
55-GAL DRUM (17c)	1.000	EACH	59.000	59.000

Waste Items byWeight

Material Item	Quantity	Unit	Unit Wt(lbs)	Item Wt(lbs)

Waste Items by Volume

Material Item	Quantity	Unit	Unit Wt(lbs)	Item Wt(lbs)
Liquids for Inorganic Matrix	32.000	PINTS	1.000	32.000

Batch Id RTR13-00280 **Container Id** 10505195 **Analysis Id** 0000093274

Waste Parameters

Waste Parameter	Remaining Weight %	Actual Weight Lbs
Iron-based Metals/Alloys	0.000	0.000
Aluminum-based Metals/Alloys	0.000	0.000
Other metals	0.000	0.000
Other Inorganic Materials	0.000	0.000
Cellulosics	0.000	0.000
Rubber	0.000	0.000
Plastic (Waste Materials)	0.000	0.000
Inorganic matrix	100.000	447.940
Organic matrix	0.000	0.000
Soils/gravel	0.000	0.000
Steel (packaging materials)	0.000	142.000
Plastic (packaging materials)	0.000	1.000
Cellulosics Packaging	0.000	0.000

Analysis Esignature History

Esig Approval Id	User Id	Esignature Date	Comment
2651996	CTIEGS	09-NOV-2013 17:48	

Batch Id RTR13-00280 **Container Id** 10504872 **Analysis Id** 0000093275

Container Type C drum, 83 Gallon **Analysis Status** Pass

RTR Date 10-NOV-2013 11:04 **Gross Weight** 577.710 **Lbs.** **Net Weight** 433.710 **Lbs.**

Equipment Z-213-106 **Waste Matrix Code** S3150 **IDC** RF-004 Special Setups

Recording Id 2RTR13-00168 **Procedure Id** INST-OI-12 **Revision** 52 **Approval Level** SPM

Is Test Pattern Resolution Ok? Yes **Start Side** A **Replicate** No **OIO** No

Audio Visual Ok? Yes **Operator** FKUCK

Result Comment Waste appears to be sludge.

Package

IDC Correct Yes **Recommended IDC** **Summary Category** S3000

Idc Change Reason

Rigid Liner Present? No **LinerType** NO LINER

Liner Punctured? N/A **Sharp Objects?** No

Liner Lid Present? No **Sharp Objects Are Protected?** Yes

Liner Lid Deformed? N/A **Layers Of Confinement** 2

Fill Factor 85

Bag Closure Method Twisted and Taped

Liquids

Liquid Present? No **Internal Container with Liquid** No

Internal Container with Liquid 0 pints **LA Candidate** No

Liquid Between Liner & Drum 0 pints **Containerized Liquid**

Total Liquid Amount 0 pints **Containerized Liquid Amt** 0 pints

Other Liquids 0 pints **Comment**

Prohibited Liquids Present No **Comment**

Contents-Drum or Box

	Value	Comment		Value	Comment
Lead?	No		**Mercury Present?**	No	
Wet Cell Batteries?	No		**Explosives?**	No	
Prohibited Compressed Gases?	No		**PCBs Present?**	No	
Aerosol Cans?	No		**PCB Mass (lbs)**	0	
Non-Mixed Hazardous Waste Present?	No		**Sealed Containers Over 4L?**	No	

Non-Radionuclide Pyrophoric Materials Present? No

Waste exhibiting the characteristics of Ignitability, Corrosivity or Reactivity Present? No

Wastes Incompatible with backfill, seal and panel closure materials, container and packaging materials,shipping container or other wastes? No

Impenetrable Dense Objects? No

Waste Material Items

Packaging Materials

Material Item	Quantity	Unit	Unit Wt(lbs)	Item Wt(lbs)
Drum plastic bag	2.000	EACH	1.000	2.000
55-GAL DRUM (17c)	1.000	EACH	59.000	59.000

Waste Items byWeight

Material Item	Quantity	Unit	Unit Wt(lbs)	Item Wt(lbs)

Waste Items by Volume

Material Item	Quantity	Unit	Unit Wt(lbs)	Item Wt(lbs)
Oil-Dri (Inside 55 gal drum)	16.000	PINTS	0.420	6.720

Batch Id RTR13-00280 **Container Id** 10504872 **Analysis Id** 0000093275

Waste Parameters

Waste Parameter	Remaining Weight %	Actual Weight Lbs
Iron-based Metals/Alloys	0.000	0.000
Aluminum-based Metals/Alloys	0.000	0.000
Other metals	0.000	0.000
Other Inorganic Materials	0.000	6.720
Cellulosics	0.000	0.000
Rubber	0.000	0.000
Plastic (Waste Materials)	0.000	0.000
Inorganic matrix	100.000	426.990
Organic matrix	0.000	0.000
Soils/gravel	0.000	0.000
Steel (packaging materials)	0.000	142.000
Plastic (packaging materials)	0.000	2.000
Cellulosics Packaging	0.000	0.000

Analysis Esignature History

Esig Approval Id	User Id	Esignature Date	Comment
2652117	FKUCK	10-NOV-2013 11:04	

Batch Id RTR13-00280 **Container Id** 10503132 **Analysis Id** 0000093277

Container Type C drum, 83 Gallon **Analysis Status** Pass

RTR Date 10-NOV-2013 11:19 **Gross Weight** 571.095 **Lbs.** **Net Weight** 428.095 **Lbs**

Equipment Z-213-106 **Waste Matrix Code** S3114 **IDC** RF-003 Organic Setups, Oil Solids

Recording Id 2RTR13-00168 **Procedure Id** INST-OI-12 **Revision** 52 **Approval Level** SPM

Is Test Pattern Resolution Ok? Yes **Start Side** A **Replicate** No **OIO** No

Audio Visual Ok? Yes **Operator** FKUCK

Result Comment Waste appears to be sludge.

Package

IDC Correct Yes **Recommended IDC** **Summary Category** S3000

Idc Change Reason

Rigid Liner Present? No **LinerType** NO LINER

Liner Punctured? N/A **Sharp Objects?** No

Liner Lid Present? No **Sharp Objects Are Protected?** Yes

Liner Lid Deformed? N/A **Layers Of Confinement** 1

Fill Factor 97

Bag Closure Method Twisted and Taped

Liquids

Liquid Present? Yes **Internal Container with Liquid** No

Internal Container with Liquid 0 pints **LA Candidate** No

Liquid Between Liner & Drum 0 pints **Containerized Liquid**

Containerized Liquid Amt 0 pints

Total Liquid Amount 1 pints

Other Liquids 1 pints **Comment** 1 pint at the bottom of the waste

Prohibited Liquids Present Yes **Comment** PCB's with liquid

Contents-Drum or Box

	Value	Comment		Value	Comment
Lead?	No		**Mercury Present?**	No	
Wet Cell Batteries?	No		**Explosives?**	No	
Prohibited Compressed Gases?	No		**PCBs Present?**	Yes - Prohibited	With liquid
Aerosol Cans?	No		**PCB Mass (lbs)**	428.1	
Non-Mixed Hazardous Waste Present?	No		**Sealed Containers Over 4L?**	No	

Non-Radionuclide Pyrophoric Materials Present? No

Waste exhibiting the characteristics of Ignitability, Corrosivity or Reactivity Present? No

Wastes Incompatible with backfill, seal and panel closure materials, container and packaging materials,shipping container or other wastes? No

Impenetrable Dense Objects? No

Waste Material Items

Packaging Materials

Material Item	Quantity	Unit	Unit Wt(lbs)	Item Wt(lbs)
Drum plastic bag	1.000	EACH	1.000	1.000
55-GAL DRUM (17c)	1.000	EACH	59.000	59.000

Waste Items byWeight

Material Item	Quantity	Unit	Unit Wt(lbs)	Item Wt(lbs)

Waste Items by Volume

Material Item	Quantity	Unit	Unit Wt(lbs)	Item Wt(lbs)
Oil-Dri (Inside 55 gal drum)	8.000	PINTS	0.420	3.360
Liquids for Organic Matrix	1.000	PINTS	1.000	1.000

Batch Id RTR13-00280 **Container Id** 10503132 **Analysis Id** 0000093277

Waste Parameters

Waste Parameter	Remaining Weight %	Actual Weight Lbs
Iron-based Metals/Alloys	0.000	0.000
Aluminum-based Metals/Alloys	0.000	0.000
Other metals	0.000	0.000
Other Inorganic Materials	0.000	3.360
Cellulosics	0.000	0.000
Rubber	0.000	0.000
Plastic (Waste Materials)	0.000	0.000
Inorganic matrix	0.000	0.000
Organic matrix	100.000	424.735
Soils/gravel	0.000	0.000
Steel (packaging materials)	0.000	142.000
Plastic (packaging materials)	0.000	1.000
Cellulosics Packaging	0.000	0.000

Analysis Esignature History

Esig Approval Id	User Id	Esignature Date	Comment
2652128	FKUCK	10-NOV-2013 11:19	

Batch Id RTR13-00280 **Container Id** 10504398 **Analysis Id** 0000093278

Container Type 7A85 85 Gallon Open Head drum, DOT 7A **Analysis Status** Pass

RTR Date 10-NOV-2013 11:39 **Gross Weight** 522.585 **Lbs.** **Net Weight** 382.585 **Lbs**

Equipment Z-213-106 **Waste Matrix Code** S3114 **IDC** RF-003 Organic Setups, Oil Solids

Recording Id 2RTR13-00168 **Procedure Id** INST-OI-12 **Revision** 52 **Approval Level** SPM

Is Test Pattern Resolution Ok? Yes **Start Side** A **Replicate** No **OIO** No

Audio Visual Ok? Yes **Operator** FKUCK

Result Comment Waste appears to be sludge.

Package

IDC Correct Yes **Recommended IDC** **Summary Category** S3000

Idc Change Reason

Rigid Liner Present? No **LinerType** NO LINER

Liner Punctured? N/A **Sharp Objects?** No

Liner Lid Present? No **Sharp Objects Are Protected?** Yes

Liner Lid Deformed? N/A **Layers Of Confinement** 1

Fill Factor 98

Bag Closure Method Twisted and Taped

Liquids

Liquid Present? Yes **Internal Container with Liquid** No

Internal Container with Liquid 0 pints **LA Candidate** No

Liquid Between Liner & Drum 0 pints **Containerized Liquid**

Total Liquid Amount 2 pints **Containerized Liquid Amt** 0 pints

Other Liquids 2 pints **Comment** 2 pints located at the bottom of the waste

Prohibited Liquids Present Yes **Comment** PCB's with liquid

Contents-Drum or Box

	Value	Comment		Value	Comment
Lead?	No		**Mercury Present?**	No	
Wet Cell Batteries?	No		**Explosives?**	No	
Prohibited Compressed Gases?	No		**PCBs Present?**	Yes - Prohibited	Liquid
Aerosol Cans?	No		**PCB Mass (lbs)**	382.59	
Non-Mixed Hazardous Waste Present?	No		**Sealed Containers Over 4L?**	No	

Non-Radionuclide Pyrophoric Materials Present? No

Waste exhibiting the characteristics of Ignitability, Corrosivity or Reactivity Present? No

Wastes Incompatible with backfill, seal and panel closure materials, container and packaging materials,shipping container or other wastes? No

Impenetrable Dense Objects? No

Waste Material Items

Packaging Materials

Material Item	Quantity	Unit	Unit Wt(lbs)	Item Wt(lbs)
Drum plastic bag	1.000	EACH	1.000	1.000
55-GAL DRUM (17c)	1.000	EACH	59.000	59.000

Waste Items byWeight

Material Item	Quantity	Unit	Unit Wt(lbs)	Item Wt(lbs)

Waste Items by Volume

Material Item	Quantity	Unit	Unit Wt(lbs)	Item Wt(lbs)
Liquids for Organic Matrix	2.000	PINTS	1.000	2.000

Batch Id RTR13-00280 **Container Id** 10504398 **Analysis Id** 0000093278

Waste Parameters

Waste Parameter	Remaining Weight %	Actual Weight Lbs
Iron-based Metals/Alloys	0.000	0.000
Aluminum-based Metals/Alloys	0.000	0.000
Other metals	0.000	0.000
Other Inorganic Materials	0.000	0.000
Cellulosics	0.000	0.000
Rubber	0.000	0.000
Plastic (Waste Materials)	0.000	0.000
Inorganic matrix	0.000	0.000
Organic matrix	100.000	382.585
Soils/gravel	0.000	0.000
Steel (packaging materials)	0.000	139.000
Plastic (packaging materials)	0.000	1.000
Cellulosics Packaging	0.000	0.000

Analysis Esignature History

Esig Approval Id	User Id	Esignature Date	Comment
2652139	FKUCK	10-NOV-2013 11:39	

Batch Id RTR13-00280 **Container Id** 10504407 **Analysis Id** 0000093280

Container Type 7A85 85 Gallon Open Head drum, DOT 7A **Analysis Status** Pass

RTR Date 10-NOV-2013 11:57 **Gross Weight** 566.685 Lbs. **Net Weight** 426.685 Lbs.
Equipment Z-213-106 **Waste Matrix Code** S3114 **IDC** RF-003 Organic Setups, Oil Solids
Recording Id 2RTR13-00168 **Procedure Id** INST-OI-12 **Revision** 52 **Approval Level** SPM
Is Test Pattern Resolution Ok? Yes **Start Side** A **Replicate** No **OIO** No
Audio Visual Ok? Yes **Operator** FKUCK
Result Comment Waste appears to be sludge.

Package

IDC Correct Yes **Recommended IDC** **Summary Category** S3000
Idc Change Reason
Rigid Liner Present? No **LinerType** NO LINER
Liner Punctured? N/A **Sharp Objects?** No
Liner Lid Present? No **Sharp Objects Are Protected?** Yes
Liner Lid Deformed? N/A **Layers Of Confinement** 1
Fill Factor 85
Bag Closure Method Twisted and Taped

Liquids

Liquid Present? Yes **Internal Container with Liquid** No
Internal Container with Liquid 0 pints **LA Candidate** Yes
Liquid Between Liner & Drum 0 pints **Containerized Liquid**
Total Liquid Amount 24 pints **Containerized Liquid Amt** 0 pints
Other Liquids 24 pints **Comment** 24 pints of liquid on top of the waste
Prohibited Liquids Present Yes **Comment** PCB's with liquid > 1%

Contents-Drum or Box

	Value	Comment		Value	Comment
Lead?	No		**Mercury Present?**	No	
Wet Cell Batteries?	No		**Explosives?**	No	
Prohibited Compressed Gases?	No		**PCBs Present?**	Yes - Prohibited	Liquid
Aerosol Cans?	No		**PCB Mass (lbs)**	426.69	
Non-Mixed Hazardous Waste Present?	No		**Sealed Containers Over 4L?**	No	

Non-Radionuclide Pyrophoric Materials Present? No
Waste exhibiting the characteristics of Ignitability, Corrosivity or Reactivity Present? No
Wastes Incompatible with backfill, seal and panel closure materials, container and packaging materials,shipping container or other wastes? No
Impenetrable Dense Objects? No

Waste Material Items

Packaging Materials

Material Item	Quantity	Unit	Unit Wt(lbs)	Item Wt(lbs)
Drum plastic bag	1.000	EACH	1.000	1.000
55-GAL DRUM (17c)	1.000	EACH	59.000	59.000

Waste Items byWeight

Material Item	Quantity	Unit	Unit Wt(lbs)	Item Wt(lbs)

Waste Items by Volume

Material Item	Quantity	Unit	Unit Wt(lbs)	Item Wt(lbs)
Oil-Dri (Inside 55 gal drum)	24.000	PINTS	0.420	10.080
Liquids for Organic Matrix	24.000	PINTS	1.000	24.000

Batch Id RTR13-00280 **Container Id** 10504407 **Analysis Id** 0000093280

Waste Parameters

Waste Parameter	Remaining Weight %	Actual Weight Lbs
Iron-based Metals/Alloys	0.000	0.000
Aluminum-based Metals/Alloys	0.000	0.000
Other metals	0.000	0.000
Other Inorganic Materials	0.000	10.080
Cellulosics	0.000	0.000
Rubber	0.000	0.000
Plastic (Waste Materials)	0.000	0.000
Inorganic matrix	0.000	0.000
Organic matrix	100.000	416.605
Soils/gravel	0.000	0.000
Steel (packaging materials)	0.000	139.000
Plastic (packaging materials)	0.000	1.000
Cellulosics Packaging	0.000	0.000

Analysis Esignature History

Esig Approval Id	User Id	Esignature Date	Comment
2652143	FKUCK	10-NOV-2013 11:57	

Batch Id RTR13-00280 **Container Id** 10505148 **Analysis Id** 0000093281

Container Type C drum, 83 Gallon **Analysis Status** Pass

RTR Date 10-NOV-2013 12:29 **Gross Weight** 555.660 Lbs. **Net Weight** 413.660 Lbs.

Equipment Z-213-106 **Waste Matrix Code** S3121 **IDC** RF-002 Second Stage Sludge

Recording Id 2RTR13-00168 **Procedure Id** INST-OI-12 **Revision** 52 **Approval Level** SPM

Is Test Pattern Resolution Ok? Yes **Start Side** A **Replicate** No **OIO** No

Audio Visual Ok? Yes **Operator** FKUCK

Result Comment Waste appears to be sludge.

Package

IDC Correct Yes **Recommended IDC** **Summary Category** S3000

Idc Change Reason

Rigid Liner Present? No **LinerType** NO LINER

Liner Punctured? N/A **Sharp Objects?** No

Liner Lid Present? No **Sharp Objects Are Protected?** Yes

Liner Lid Deformed? N/A **Layers Of Confinement** 0

Fill Factor 95

Bag Closure Method No Bags

Liquids

Liquid Present? Yes **Internal Container with Liquid** No

Internal Container with Liquid 0 pints **LA Candidate** No

Liquid Between Liner & Drum 0 pints **Containerized Liquid**

Total Liquid Amount 16 pints **Containerized Liquid Amt** 0 pints

Other Liquids 16 pints **Comment** 10 pints between 55 and 83 and 6 pints in the 55. located at the bottom of the waste.

Prohibited Liquids Present Yes **Comment** > 1%

Contents-Drum or Box

	Value	Comment		Value	Comment
Lead?	No		**Mercury Present?**	No	
Wet Cell Batteries?	No		**Explosives?**	No	
Prohibited Compressed Gases?	No		**PCBs Present?**	No	
Aerosol Cans?	No		**PCB Mass (lbs)**	0	
Non-Mixed Hazardous Waste Present?	No		**Sealed Containers Over 4L?**	No	

Non-Radionuclide Pyrophoric Materials Present? No

Waste exhibiting the characteristics of Ignitability, Corrosivity or Reactivity Present? No

Wastes Incompatible with backfill, seal and panel closure materials, container and packaging materials,shipping container or other wastes? No

Impenetrable Dense Objects? No

Waste Material Items

Packaging Materials

Material Item	Quantity	Unit	Unit Wt(lbs)	Item Wt(lbs)
55-GAL DRUM (17c)	1.000	EACH	59.000	59.000

Waste Items byWeight

Material Item	Quantity	Unit	Unit Wt(lbs)	Item Wt(lbs)
Drum Bag	1.000	EACH	1.000	1.000

Waste Items by Volume

Material Item	Quantity	Unit	Unit Wt(lbs)	Item Wt(lbs)
Liquids for Inorganic Matrix	16.000	PINTS	1.000	16.000

Batch Id RTR13-00280 **Container Id** 10505148 **Analysis Id** 0000093281

Waste Parameters

Waste Parameter	Remaining Weight %	Actual Weight Lbs
Iron-based Metals/Alloys	0.000	0.000
Aluminum-based Metals/Alloys	0.000	0.000
Other metals	0.000	0.000
Other Inorganic Materials	0.000	0.000
Cellulosics	0.000	0.000
Rubber	0.000	0.000
Plastic (Waste Materials)	0.000	1.000
Inorganic matrix	100.000	412.660
Organic matrix	0.000	0.000
Soils/gravel	0.000	0.000
Steel (packaging materials)	0.000	142.000
Plastic (packaging materials)	0.000	0.000
Cellulosics Packaging	0.000	0.000

Analysis Esignature History

Esig Approval Id	User Id	Esignature Date	Comment
2652147	FKUCK	10-NOV-2013 12:29	

Batch Id RTR13-00280 **Container Id** 10186411 **Analysis Id** 0000093283

Container Type C drum, 83 Gallon **Analysis Status** Pass

RTR Date 10-NOV-2013 12:48 **Gross Weight** 698.985 Lbs. **Net Weight** 554.985 Lbs.

Equipment Z-213-106 **Waste Matrix Code** S5490 **IDC** RF-960 Concrete, Asphalt, etc.

Recording Id 2RTR13-00168 **Procedure Id** INST-OI-12 **Revision** 52 **Approval Level** SPM

Is Test Pattern Resolution Ok? Yes **Start Side** A **Replicate** No **OIO** No

Audio Visual Ok? Yes **Operator** FKUCK

Result Comment Waste consists of large pieces of concrete.

Package

IDC Correct Yes **Recommended IDC** **Summary Category** S5000

Idc Change Reason

Rigid Liner Present? No **LinerType** NO LINER

Liner Punctured? N/A **Sharp Objects?** Yes

Liner Lid Present? No **Sharp Objects Are Protected?** Yes

Liner Lid Deformed? N/A **Layers Of Confinement** 2

Fill Factor 95

Bag Closure Method Twisted and Taped

Liquids

Liquid Present? No **Internal Container with Liquid** No

Internal Container with Liquid 0 pints **LA Candidate** No

Liquid Between Liner & Drum 0 pints **Containerized Liquid**

Total Liquid Amount 0 pints **Containerized Liquid Amt** 0 pints

Other Liquids 0 pints **Comment**

Prohibited Liquids Present No **Comment**

Contents-Drum or Box

	Value	Comment		Value	Comment
Lead?	No		**Mercury Present?**	No	
Wet Cell Batteries?	No		**Explosives?**	No	
Prohibited Compressed Gases?	No		**PCBs Present?**	No	
Aerosol Cans?	No		**PCB Mass (lbs)**	0	
Non-Mixed Hazardous Waste Present?	No		**Sealed Containers Over 4L?**	No	

Non-Radionuclide Pyrophoric Materials Present? No

Waste exhibiting the characteristics of Ignitability, Corrosivity or Reactivity Present? No

Wastes Incompatible with backfill, seal and panel closure materials, container and packaging materials,shipping container or other wastes? No

Impenetrable Dense Objects? Yes - Unacceptable concrete

Waste Material Items

Packaging Materials

Material Item	Quantity	Unit	Unit Wt(lbs)	Item Wt(lbs)
Drum plastic bag	2.000	EACH	1.000	2.000
55-GAL DRUM (17c)	1.000	EACH	59.000	59.000

Waste Items byWeight

Material Item	Quantity	Unit	Unit Wt(lbs)	Item Wt(lbs)
metal bar	1.000	EACH	10.000	10.000
Cardboard liner	1.000	EACH	4.000	4.000

Waste Items by Volume

Material Item	Quantity	Unit	Unit Wt(lbs)	Item Wt(lbs)
Oil-Dri (Inside 55 gal drum)	12.000	PINTS	0.420	5.040

Batch Id RTR13-00280 **Container Id** 10186411 **Analysis Id** 0000093283

Waste Parameters

Waste Parameter	Remaining Weight %	Actual Weight Lbs
Iron-based Metals/Alloys	0.000	10.000
Aluminum-based Metals/Alloys	0.000	0.000
Other metals	0.000	0.000
Other Inorganic Materials	100.000	540.985
Cellulosics	0.000	4.000
Rubber	0.000	0.000
Plastic (Waste Materials)	0.000	0.000
Inorganic matrix	0.000	0.000
Organic matrix	0.000	0.000
Soils/gravel	0.000	0.000
Steel (packaging materials)	0.000	142.000
Plastic (packaging materials)	0.000	2.000
Cellulosics Packaging	0.000	0.000

Analysis Esignature History

Esig Approval Id	User Id	Esignature Date	Comment
2652149	FKUCK	10-NOV-2013 12:48	

Batch Id RTR13-00280 **Container Id** 10505188 **Analysis Id** 0000093286

Container Type C drum, 83 Gallon **Analysis Status** Pass

RTR Date 10-NOV-2013 14:32 **Gross Weight** 577.710 **Lbs.** **Net Weight** 433.710 **Lbs.**

Equipment Z-213-106 **Waste Matrix Code** S3121 **IDC** RF-002 Second Stage Sludge

Recording Id 2RTR13-00168 **Procedure Id** INST-OI-12 **Revision** 52 **Approval Level** SPM

Is Test Pattern Resolution Ok? Yes **Start Side** A **Replicate** No **OIO** No

Audio Visual Ok? Yes **Operator** FKUCK

Result Comment Waste appears to be sludge.

Package

IDC Correct Yes **Recommended IDC** **Summary Category** S3000

Idc Change Reason

Rigid Liner Present? No **LinerType** NO LINER

Liner Punctured? N/A **Sharp Objects?** No

Liner Lid Present? No **Sharp Objects Are Protected?** Yes

Liner Lid Deformed? N/A **Layers Of Confinement** 2

Fill Factor 95

Bag Closure Method Twisted and Taped

Liquids

Liquid Present? Yes **Internal Container with Liquid** No

Internal Container with Liquid 0 pints **LA Candidate** No

Liquid Between Liner & Drum 0 pints **Containerized Liquid**

Total Liquid Amount 1.5 pints **Containerized Liquid Amt** 0 pints

Other Liquids 1.5 pints **Comment** 1.5 pints at the bottom of the waste.

Prohibited Liquids Present No **Comment**

Contents-Drum or Box

	Value	Comment		Value	Comment
Lead?	No		**Mercury Present?**	No	
Wet Cell Batteries?	No		**Explosives?**	No	
Prohibited Compressed Gases?	No		**PCBs Present?**	No	
Aerosol Cans?	No		**PCB Mass (lbs)**	0	
Non-Mixed Hazardous Waste Present?	No		**Sealed Containers Over 4L?**	No	

Non-Radionuclide Pyrophoric Materials Present? No

Waste exhibiting the characteristics of Ignitability, Corrosivity or Reactivity Present? No

Wastes Incompatible with backfill, seal and panel closure materials, container and packaging materials,shipping container or other wastes? No

Impenetrable Dense Objects? No

Waste Material Items

Packaging Materials

Material Item	Quantity	Unit	Unit Wt(lbs)	Item Wt(lbs)
Drum plastic bag	2.000	EACH	1.000	2.000
55-GAL DRUM (17c)	1.000	EACH	59.000	59.000

Waste Items byWeight

Material Item	Quantity	Unit	Unit Wt(lbs)	Item Wt(lbs)

Waste Items by Volume

Material Item	Quantity	Unit	Unit Wt(lbs)	Item Wt(lbs)
Oil-Dri (Inside 55 gal drum)	3.000	PINTS	0.420	1.260
Liquids for Inorganic Matrix	1.500	PINTS	1.000	1.500

Batch Id RTR13-00280 **Container Id** 10505188 **Analysis Id** 0000093286

Waste Parameters

Waste Parameter	Remaining Weight %	Actual Weight Lbs
Iron-based Metals/Alloys	0.000	0.000
Aluminum-based Metals/Alloys	0.000	0.000
Other metals	0.000	0.000
Other Inorganic Materials	0.000	1.260
Cellulosics	0.000	0.000
Rubber	0.000	0.000
Plastic (Waste Materials)	0.000	0.000
Inorganic matrix	100.000	432.450
Organic matrix	0.000	0.000
Soils/gravel	0.000	0.000
Steel (packaging materials)	0.000	142.000
Plastic (packaging materials)	0.000	2.000
Cellulosics Packaging	0.000	0.000

Analysis Esignature History

Esig Approval Id	User Id	Esignature Date	Comment
2652163	FKUCK	10-NOV-2013 14:32	

Batch Id RTR13-00280 **Container Id** 10505202 **Analysis Id** 0000093288

Container Type C drum, 83 Gallon **Analysis Status** Pass

RTR Date 10-NOV-2013 14:45 **Gross Weight** 535.815 Lbs. **Net Weight** 392.815 Lbs.
Equipment Z-213-106 **Waste Matrix Code** S3114 **IDC** RF-003 Organic Setups, Oil Solids
Recording Id 2RTR13-00168 **Procedure Id** INST-OI-12 **Revision** 52 **Approval Level** SPM
Is Test Pattern Resolution Ok? Yes **Start Side** A **Replicate** No **OIO** No
Audio Visual Ok? Yes **Operator** FKUCK
Result Comment Waste appears to be sludge.

Package

IDC Correct Yes **Recommended IDC** **Summary Category** S3000
Idc Change Reason

Rigid Liner Present? No **LinerType** NO LINER
Liner Punctured? N/A **Sharp Objects?** No
Liner Lid Present? No **Sharp Objects Are Protected?** Yes
Liner Lid Deformed? N/A **Layers Of Confinement** 1
Fill Factor 98
Bag Closure Method Twisted and Taped

Liquids

Liquid Present? No **Internal Container with Liquid** No
Internal Container with Liquid 0 pints **LA Candidate** No
Liquid Between Liner & Drum 0 pints **Containerized Liquid**
Total Liquid Amount 0 pints **Containerized Liquid Amt** 0 pints
Other Liquids 0 pints **Comment**
Prohibited Liquids Present No **Comment**

Contents-Drum or Box

	Value	Comment		Value	Comment
Lead?	No		**Mercury Present?**	No	
Wet Cell Batteries?	No		**Explosives?**	No	
Prohibited Compressed Gases?	No		**PCBs Present?**	Yes - Acceptable	No liquid
Aerosol Cans?	No		**PCB Mass (lbs)**	392.82	
Non-Mixed Hazardous Waste Present?	No		**Sealed Containers Over 4L?**	No	

Non-Radionuclide Pyrophoric Materials Present? No
Waste exhibiting the characteristics of Ignitability, Corrosivity or Reactivity Present? No
Wastes Incompatible with backfill, seal and panel closure materials, container and packaging materials,shipping container or other wastes? No
Impenetrable Dense Objects? No

Waste Material Items

Packaging Materials

Material Item	Quantity	Unit	Unit Wt(lbs)	Item Wt(lbs)
Drum plastic bag	1.000	EACH	1.000	1.000
55-GAL DRUM (17c)	1.000	EACH	59.000	59.000

Waste Items byWeight

Material Item	Quantity	Unit	Unit Wt(lbs)	Item Wt(lbs)

Waste Items by Volume

Material Item	Quantity	Unit	Unit Wt(lbs)	Item Wt(lbs)
Oil-Dri (Inside 55 gal drum)	4.000	PINTS	0.420	1.680

Batch Id RTR13-00280 **Container Id** 10505202 **Analysis Id** 0000093288

Waste Parameters

Waste Parameter	Remaining Weight %	Actual Weight Lbs
Iron-based Metals/Alloys	0.000	0.000
Aluminum-based Metals/Alloys	0.000	0.000
Other metals	0.000	0.000
Other Inorganic Materials	0.000	1.680
Cellulosics	0.000	0.000
Rubber	0.000	0.000
Plastic (Waste Materials)	0.000	0.000
Inorganic matrix	0.000	0.000
Organic matrix	100.000	391.135
Soils/gravel	0.000	0.000
Steel (packaging materials)	0.000	142.000
Plastic (packaging materials)	0.000	1.000
Cellulosics Packaging	0.000	0.000

Analysis Esignature History

Esig Approval Id	User Id	Esignature Date	Comment
2652165	FKUCK	10-NOV-2013 14:45	

Batch Id RTR13-00280 **Container Id** 10505183 **Analysis Id** 0000093290

Container Type 7A85 85 Gallon Open Head drum, DOT 7A **Analysis Status** Pass

RTR Date 10-NOV-2013 15:32 **Gross Weight** 608.580 **Lbs.** **Net Weight** 468.580 **Lbs.**

Equipment Z-213-106 **Waste Matrix Code** S3114 **IDC** RF-003 Organic Setups, Oil Solids

Recording Id 2RTR13-00168 **Procedure Id** INST-OI-12 **Revision** 52 **Approval Level** SPM

Is Test Pattern Resolution Ok? Yes **Start Side** A **Replicate** No **OIO** No

Audio Visual Ok? Yes **Operator** FKUCK

Result Comment Waste appears to be sludge.
(rework) Updated Liquids fields. K.H. 03DEC13

Package

IDC Correct Yes **Recommended IDC** **Summary Category** S3000

Idc Change Reason

Rigid Liner Present? No **LinerType** NO LINER

Liner Punctured? N/A **Sharp Objects?** No

Liner Lid Present? No **Sharp Objects Are Protected?** Yes

Liner Lid Deformed? N/A **Layers Of Confinement** 1

Fill Factor 98

Bag Closure Method Twisted and Taped

Liquids

Liquid Present? Yes **Internal Container with Liquid** No

Internal Container with Liquid 0 pints **LA Candidate** No

Liquid Between Liner & Drum 0 pints **Containerized Liquid**

Total Liquid Amount 3 pints **Containerized Liquid Amt** 0 pints

Other Liquids 3 pints **Comment** 3 pints at the bottom of the waste

Prohibited Liquids Present Yes **Comment** PCB's with liquid

Contents-Drum or Box

	Value	Comment		Value	Comment
Lead?	No		**Mercury Present?**	No	
Wet Cell Batteries?	No		**Explosives?**	No	
Prohibited Compressed Gases?	No		**PCBs Present?**	Yes - Prohibited	Liquid
Aerosol Cans?	No		**PCB Mass (lbs)**	468.58	
Non-Mixed Hazardous Waste Present?	No		**Sealed Containers Over 4L?**	No	

Non-Radionuclide Pyrophoric Materials Present? No

Waste exhibiting the characteristics of Ignitability, Corrosivity or Reactivity Present? No

Wastes Incompatible with backfill, seal and panel closure materials, container and packaging materials,shipping container or other wastes? No

Impenetrable Dense Objects? No

Waste Material Items

Packaging Materials

Material Item	Quantity	Unit	Unit Wt(lbs)	Item Wt(lbs)
Drum plastic bag	1.000	EACH	1.000	1.000
55-GAL DRUM (17c)	1.000	EACH	59.000	59.000

Waste Items byWeight

Material Item	Quantity	Unit	Unit Wt(lbs)	Item Wt(lbs)

Waste Items by Volume

Material Item	Quantity	Unit	Unit Wt(lbs)	Item Wt(lbs)
Oil-Dri (Inside 55 gal drum)	8.000	PINTS	0.420	3.360
Liquids for Organic Matrix	3.000	PINTS	1.000	3.000

Batch Id RTR13-00280 **Container Id** 10505183 **Analysis Id** 0000093290

Waste Parameters

Waste Parameter	Remaining Weight %	Actual Weight Lbs
Iron-based Metals/Alloys	0.000	0.000
Aluminum-based Metals/Alloys	0.000	0.000
Other metals	0.000	0.000
Other Inorganic Materials	0.000	3.360
Cellulosics	0.000	0.000
Rubber	0.000	0.000
Plastic (Waste Materials)	0.000	0.000
Inorganic matrix	0.000	0.000
Organic matrix	100.000	465.220
Soils/gravel	0.000	0.000
Steel (packaging materials)	0.000	139.000
Plastic (packaging materials)	0.000	1.000
Cellulosics Packaging	0.000	0.000

Analysis Esignature History

Esig Approval Id	User Id	Esignature Date	Comment
2664532	KHUGHES	03-DEC-2013 15:55	
2652174	FKUCK	10-NOV-2013 15:32	

Batch Id RTR13-00280 **Container Id** 10503133 **Analysis Id** 0000093291

Container Type C drum, 83 Gallon **Analysis Status** Pass

RTR Date 10-NOV-2013 15:46 **Gross Weight** 648.270 **Lbs.** **Net Weight** 504.270 **Lbs**

Equipment Z-213-106 **Waste Matrix Code** S3114 **IDC** RF-003 Organic Setups, Oil Solids

Recording Id 2RTR13-00168 **Procedure Id** INST-OI-12 **Revision** 52 **Approval Level** SPM

Is Test Pattern Resolution Ok? Yes **Start Side** A **Replicate** No **OIO** No

Audio Visual Ok? Yes **Operator** FKUCK

Result Comment Waste appears to be sludge.

Package

IDC Correct Yes **Recommended IDC** **Summary Category** S3000

Idc Change Reason

Rigid Liner Present? No **LinerType** NO LINER

Liner Punctured? N/A **Sharp Objects?** No

Liner Lid Present? No **Sharp Objects Are Protected?** Yes

Liner Lid Deformed? N/A **Layers Of Confinement** 2

Fill Factor 96

Bag Closure Method Twisted and Taped

Liquids

Liquid Present? No **Internal Container with Liquid** No

Internal Container with Liquid 0 pints **LA Candidate** No

Liquid Between Liner & Drum 0 pints **Containerized Liquid**

Total Liquid Amount 0 pints **Containerized Liquid Amt** 0 pints

Other Liquids 0 pints **Comment**

Prohibited Liquids Present No **Comment**

Contents-Drum or Box

	Value	Comment		Value	Comment
Lead?	No		**Mercury Present?**	No	
Wet Cell Batteries?	No		**Explosives?**	No	
Prohibited Compressed Gases?	No		**PCBs Present?**	Yes - Acceptable	No liquid
Aerosol Cans?	No		**PCB Mass (lbs)**	504.27	
Non-Mixed Hazardous Waste Present?	No		**Sealed Containers Over 4L?**	No	

Non-Radionuclide Pyrophoric Materials Present? No

Waste exhibiting the characteristics of Ignitability, Corrosivity or Reactivity Present? No

Wastes Incompatible with backfill, seal and panel closure materials, container and packaging materials,shipping container or other wastes? No

Impenetrable Dense Objects? No

Waste Material Items

Packaging Materials

Material Item	Quantity	Unit	Unit Wt(lbs)	Item Wt(lbs)
Drum plastic bag	2.000	EACH	1.000	2.000
55-GAL DRUM (17c)	1.000	EACH	59.000	59.000

Waste Items byWeight

Material Item	Quantity	Unit	Unit Wt(lbs)	Item Wt(lbs)

Waste Items by Volume

Material Item	Quantity	Unit	Unit Wt(lbs)	Item Wt(lbs)
Oil-Dri (Inside 55 gal drum)	12.000	PINTS	0.420	5.040

Batch Id RTR13-00280 **Container Id** 10503133 **Analysis Id** 0000093291

Waste Parameters

Waste Parameter	Remaining Weight %	Actual Weight Lbs
Iron-based Metals/Alloys	0.000	0.000
Aluminum-based Metals/Alloys	0.000	0.000
Other metals	0.000	0.000
Other Inorganic Materials	0.000	5.040
Cellulosics	0.000	0.000
Rubber	0.000	0.000
Plastic (Waste Materials)	0.000	0.000
Inorganic matrix	0.000	0.000
Organic matrix	100.000	499.230
Soils/gravel	0.000	0.000
Steel (packaging materials)	0.000	142.000
Plastic (packaging materials)	0.000	2.000
Cellulosics Packaging	0.000	0.000

Analysis Esignature History

Esig Approval Id	User Id	Esignature Date	Comment
2652184	FKUCK	10-NOV-2013 15:46	

Batch Id RTR13-00280 **Container Id** 10333668 **Analysis Id** 0000093292

Container Type C drum, 83 Gallon **Analysis Status** Pass

RTR Date 10-NOV-2013 16:07 **Gross Weight** 526.995 Lbs. **Net Weight** 383.995 Lbs.

Equipment Z-213-106 **Waste Matrix Code** S3900 **IDC** SD-176 Pre-1980 INL-Exhumed SDA Homogeneous Solids

Recording Id 2RTR13-00168 **Procedure Id** INST-OI-12 **Revision**

Is Test Pattern Resolution Ok? Yes **Start Side** A **Replicate** 52 **Approval Level** SPM

Audio Visual Ok? Yes **Operator** No **OIO** No

FKUCK

Result Comment

Waste appears to be sludge.
Inner 55 gallon drum is inverted.
(rework) Entered Yes, Unacceptable with comment into Impenetrable Dense Objects fields. KH 03DEC13

Package

IDC Correct Yes **Recommended IDC** **Summary Category** S3000

Idc Change Reason

Rigid Liner Present? No **LinerType** NO LINER

Liner Punctured? N/A **Sharp Objects?** No

Liner Lid Present? No **Sharp Objects Are Protected?** Yes

Liner Lid Deformed? N/A **Layers Of Confinement** 1

Fill Factor 99

Bag Closure Method Twisted and Taped

Liquids

Liquid Present? No **Internal Container with Liquid** No

Internal Container with Liquid 0 pints **LA Candidate** No

Liquid Between Liner & Drum 0 pints **Containerized Liquid**

Total Liquid Amount 0 pints **Containerized Liquid Amt** 0 pints

Other Liquids 0 pints **Comment**

Prohibited Liquids Present No **Comment**

Contents-Drum or Box

	Value	Comment		Value	Comment
Lead?	No		**Mercury Present?**	No	
Wet Cell Batteries?	No		**Explosives?**	No	
Prohibited Compressed Gases?	No		**PCBs Present?**	Yes - Acceptable	No liquid
Aerosol Cans?	No		**PCB Mass (lbs)**	384	
Non-Mixed Hazardous Waste Present?	No		**Sealed Containers Over 4L?**	No	

Non-Radionuclide Pyrophoric Materials Present? No

Waste exhibiting the characteristics of Ignitability, Corrosivity or Reactivity Present? No

Wastes Incompatible with backfill, seal and panel closure materials, container and packaging materials,shipping container or other wastes? No

Impenetrable Dense Objects? Yes - Unacceptable impenetrable waste

Waste Material Items

Packaging Materials

Material Item	Quantity	Unit	Unit Wt(lbs)	Item Wt(lbs)
Drum plastic bag	1.000	EACH	1.000	1.000
55-GAL DRUM (17c)	1.000	EACH	59.000	59.000

Waste Items byWeight

Material Item	Quantity	Unit	Unit Wt(lbs)	Item Wt(lbs)

Waste Items by Volume

Material Item	Quantity	Unit	Unit Wt(lbs)	Item Wt(lbs)

Batch Id RTR13-00280 **Container Id** 10333668 **Analysis Id** 0000093292

Waste Parameters

Waste Parameter	Remaining Weight %	Actual Weight Lbs
Iron-based Metals/Alloys	0.000	0.000
Aluminum-based Metals/Alloys	0.000	0.000
Other metals	0.000	0.000
Other Inorganic Materials	0.000	0.000
Cellulosics	0.000	0.000
Rubber	0.000	0.000
Plastic (Waste Materials)	0.000	0.000
Inorganic matrix	0.000	0.000
Organic matrix	100.000	383.995
Soils/gravel	0.000	0.000
Steel (packaging materials)	0.000	142.000
Plastic (packaging materials)	0.000	1.000
Cellulosics Packaging	0.000	0.000

Analysis Esignature History

Esig Approval Id	User Id	Esignature Date	Comment
2664514	KHUGHES	03-DEC-2013 15:37	
2652185	FKUCK	10-NOV-2013 16:07	

Batch Id RTR13-00280 **Container Id** 10288576 **Analysis Id** 0000093293

Container Type C drum, 83 Gallon **Analysis Status** Pass

RTR Date 10-NOV-2013 16:22 **Gross Weight** 196.245 **Lbs.** **Net Weight** 54.245 **Lbs**

Equipment Z-213-106 **Waste Matrix Code** S5490 **IDC** RF-750 Pits 11 & 12 Debris

Recording Id 2RTR13-00168 **Procedure Id** INST-OI-12 **Revision** 52 **Approval Level** SPM

Is Test Pattern Resolution Ok? Yes **Start Side** A **Replicate** No **OIO** No

Audio Visual Ok? Yes **Operator** FKUCK

Result Comment Waste consists primarily of plastic sheeting and a flex hose.

Package

IDC Correct Yes **Recommended IDC** **Summary Category** S5000

Idc Change Reason

Rigid Liner Present? No **LinerType** NO LINER

Liner Punctured? N/A **Sharp Objects?** No

Liner Lid Present? No **Sharp Objects Are Protected?** Yes

Liner Lid Deformed? N/A **Layers Of Confinement** 0

Fill Factor 60

Bag Closure Method No Bags

Liquids

Liquid Present? No **Internal Container with Liquid** No

Internal Container with Liquid 0 pints **LA Candidate** No

Liquid Between Liner & Drum 0 pints **Containerized Liquid**

Total Liquid Amount 0 pints **Containerized Liquid Amt** 0 pints

Other Liquids 0 pints **Comment**

Prohibited Liquids Present No **Comment**

Contents-Drum or Box

	Value	Comment		Value	Comment
Lead?	No		**Mercury Present?**	No	
Wet Cell Batteries?	No		**Explosives?**	No	
Prohibited Compressed Gases?	No		**PCBs Present?**	No	
Aerosol Cans?	No		**PCB Mass (lbs)**	0	
Non-Mixed Hazardous Waste Present?	No		**Sealed Containers Over 4L?**	No	

Non-Radionuclide Pyrophoric Materials Present? No

Waste exhibiting the characteristics of Ignitability, Corrosivity or Reactivity Present? No

Wastes Incompatible with backfill, seal and panel closure materials, container and packaging materials,shipping container or other wastes? No

Impenetrable Dense Objects? No

Waste Material Items

Packaging Materials

Material Item	Quantity	Unit	Unit Wt(lbs)	Item Wt(lbs)
55-GAL DRUM (17c)	1.000	EACH	59.000	59.000

Waste Items byWeight

Material Item	Quantity	Unit	Unit Wt(lbs)	Item Wt(lbs)
towels, wipes, paper, filter media	1.000	EACH	10.000	10.000
metal cans and debris	1.000	EACH	10.000	10.000

Waste Items by Volume

Material Item	Quantity	Unit	Unit Wt(lbs)	Item Wt(lbs)

Batch Id RTR13-00280 **Container Id** 10288576 **Analysis Id** 0000093293

Waste Parameters

Waste Parameter	Remaining Weight %	Actual Weight Lbs
Iron-based Metals/Alloys	0.000	10.000
Aluminum-based Metals/Alloys	0.000	0.000
Other metals	0.000	0.000
Other Inorganic Materials	0.000	0.000
Cellulosics	0.000	10.000
Rubber	0.000	0.000
Plastic (Waste Materials)	100.000	34.245
Inorganic matrix	0.000	0.000
Organic matrix	0.000	0.000
Soils/gravel	0.000	0.000
Steel (packaging materials)	0.000	142.000
Plastic (packaging materials)	0.000	0.000
Cellulosics Packaging	0.000	0.000

Analysis Esignature History

Esig Approval Id	User Id	Esignature Date	Comment
2652189	FKUCK	10-NOV-2013 16:22	

Batch Id RTR13-00280 **Container Id** 10503133 **Analysis Id** 0000093295

Container Type C drum, 83 Gallon **Analysis Status** Pass

RTR Date 10-NOV-2013 16:48 **Gross Weight** 648.270 **Lbs.** **Net Weight** 504.270 **Lbs**

Equipment Z-213-106 **Waste Matrix Code** S3114 **IDC** RF-003 Organic Setups, Oil Solids

Recording Id 2RTR13-00168 **Procedure Id** INST-OI-12 **Revision** 52 **Approval Level** SPM

Is Test Pattern Resolution Ok? Yes **Start Side** A **Replicate** Yes **OIO** No

Audio Visual Ok? Yes **Operator** AATWELL

Result Comment Waste appears to be sludge.

Package

IDC Correct Yes **Recommended IDC** **Summary Category** S3000

Idc Change Reason

Rigid Liner Present? No **LinerType** NO LINER

Liner Punctured? N/A **Sharp Objects?** No

Liner Lid Present? No **Sharp Objects Are Protected?** Yes

Liner Lid Deformed? N/A **Layers Of Confinement** 2

Fill Factor 95

Bag Closure Method Twisted and Taped

Liquids

Liquid Present? No **Internal Container with Liquid** No

Internal Container with Liquid 0 pints **LA Candidate** No

Liquid Between Liner & Drum 0 pints **Containerized Liquid**

Total Liquid Amount 0 pints **Containerized Liquid Amt** 0 pints

Other Liquids 0 pints **Comment**

Prohibited Liquids Present No **Comment**

Contents-Drum or Box

	Value	Comment		Value	Comment
Lead?	No		**Mercury Present?**	No	
Wet Cell Batteries?	No		**Explosives?**	No	
Prohibited Compressed Gases?	No		**PCBs Present?**	Yes - Acceptable	No liquid in waste
Aerosol Cans?	No		**PCB Mass (lbs)**	504.27	
Non-Mixed Hazardous Waste Present?	No		**Sealed Containers Over 4L?**	No	

Non-Radionuclide Pyrophoric Materials Present? No

Waste exhibiting the characteristics of Ignitability, Corrosivity or Reactivity Present? No

Wastes Incompatible with backfill, seal and panel closure materials, container and packaging materials,shipping container or other wastes? No

Impenetrable Dense Objects? No

Waste Material Items

Packaging Materials

Material Item	Quantity	Unit	Unit Wt(lbs)	Item Wt(lbs)
Drum plastic bag	2.000	EACH	1.000	2.000
55-GAL DRUM (17c)	1.000	EACH	59.000	59.000

Waste Items byWeight

Material Item	Quantity	Unit	Unit Wt(lbs)	Item Wt(lbs)

Waste Items by Volume

Material Item	Quantity	Unit	Unit Wt(lbs)	Item Wt(lbs)

Batch Id RTR13-00280 **Container Id** 10503133 **Analysis Id** 0000093295

Waste Parameters

Waste Parameter	Remaining Weight %	Actual Weight Lbs
Iron-based Metals/Alloys	0.000	0.000
Aluminum-based Metals/Alloys	0.000	0.000
Other metals	0.000	0.000
Other Inorganic Materials	0.000	0.000
Cellulosics	0.000	0.000
Rubber	0.000	0.000
Plastic (Waste Materials)	0.000	0.000
Inorganic matrix	0.000	0.000
Organic matrix	100.000	504.270
Soils/gravel	0.000	0.000
Steel (packaging materials)	0.000	142.000
Plastic (packaging materials)	0.000	2.000
Cellulosics Packaging	0.000	0.000

Analysis Esignature History

Esig Approval Id	User Id	Esignature Date	Comment
2652205	AATWELL	10-NOV-2013 16:48	

Batch Id RTR13-00280 **Container Id** 10505183 **Analysis Id** 0000093296

Container Type 7A85 85 Gallon Open Head drum, DOT 7A **Analysis Status** Pass

RTR Date 10-NOV-2013 17:03 **Gross Weight** 608.580 Lbs. **Net Weight** 468.580 Lbs.
Equipment Z-213-106 **Waste Matrix Code** S3114 **IDC** RF-003 Organic Setups, Oil Solids
Recording Id 2RTR13-00168 **Procedure Id** INST-OI-12 **Revision** 52 **Approval Level** SPM
Is Test Pattern Resolution Ok? Yes **Start Side** A **Replicate** No **OIO** Yes
Audio Visual Ok? Yes **Operator** AATWELL
Result Comment Waste appears to be sludge.

Package

IDC Correct Yes **Recommended IDC** **Summary Category** S3000
Idc Change Reason
Rigid Liner Present? No **LinerType** NO LINER
Liner Punctured? N/A **Sharp Objects?** No
Liner Lid Present? No **Sharp Objects Are Protected?** Yes
Liner Lid Deformed? N/A **Layers Of Confinement** 1
Fill Factor 99
Bag Closure Method Twisted and Taped

Liquids

Liquid Present? Yes **Internal Container with Liquid** No
Internal Container with Liquid 0 pints **LA Candidate** No
Liquid Between Liner & Drum 0 pints **Containerized Liquid**
Total Liquid Amount 3 pints **Containerized Liquid Amt** 0 pints
Other Liquids 3 pints **Comment** Aprox 3 pints of liquid at bottom of drum
Prohibited Liquids Present Yes **Comment** PCBs with liquid

Contents-Drum or Box

	Value	Comment		Value	Comment
Lead?	No		**Mercury Present?**	No	
Wet Cell Batteries?	No		**Explosives?**	No	
Prohibited Compressed Gases?	No		**PCBs Present?**	Yes - Prohibited	Liquid in waste
Aerosol Cans?	No		**PCB Mass (lbs)**	468.58	
Non-Mixed Hazardous Waste Present?	No		**Sealed Containers Over 4L?**	No	

Non-Radionuclide Pyrophoric Materials Present? No
Waste exhibiting the characteristics of Ignitability, Corrosivity or Reactivity Present? No
Wastes Incompatible with backfill, seal and panel closure materials, container and packaging materials,shipping container or other wastes? No
Impenetrable Dense Objects? No

Waste Material Items

Packaging Materials

Material Item	Quantity	Unit	Unit Wt(lbs)	Item Wt(lbs)
Drum plastic bag	1.000	EACH	1.000	1.000
55-GAL DRUM (17c)	1.000	EACH	59.000	59.000

Waste Items byWeight

Material Item	Quantity	Unit	Unit Wt(lbs)	Item Wt(lbs)

Waste Items by Volume

Material Item	Quantity	Unit	Unit Wt(lbs)	Item Wt(lbs)
Liquids for Organic Matrix	3.000	PINTS	1.000	3.000

Batch Id RTR13-00280 **Container Id** 10505183 **Analysis Id** 0000093296

Waste Parameters

Waste Parameter	Remaining Weight %	Actual Weight Lbs
Iron-based Metals/Alloys	0.000	0.000
Aluminum-based Metals/Alloys	0.000	0.000
Other metals	0.000	0.000
Other Inorganic Materials	0.000	0.000
Cellulosics	0.000	0.000
Rubber	0.000	0.000
Plastic (Waste Materials)	0.000	0.000
Inorganic matrix	0.000	0.000
Organic matrix	100.000	468.580
Soils/gravel	0.000	0.000
Steel (packaging materials)	0.000	139.000
Plastic (packaging materials)	0.000	1.000
Cellulosics Packaging	0.000	0.000

RTR Independent Observation

Obsolete	Performed	User Name	Checklist	Answer
No	25-NOV-2013 17:10	MSORENSON	1.Was an independent observation performed?	Yes
			2.Were all items on the recording media identified correctly in WTS?	Yes
			3.Do you agree with the operator?	No

Comment I agree with the original operator on the fill factor and absorbent estimates.

Independent Observation Esignature History

Esig Approval Id	User Id	Esignature Date	Comment
2659797	MSORENSON	25-NOV-2013 17:10	OIO complete.

Analysis Esignature History

Esig Approval Id	User Id	Esignature Date	Comment
2652210	AATWELL	10-NOV-2013 17:03	

Batch Id RTR13-00280 **Container Id** 10503134 **Analysis Id** 0000093297

Container Type C drum, 83 Gallon **Analysis Status** Pass

RTR Date 10-NOV-2013 17:47 **Gross Weight** 231.525 **Lbs.** **Net Weight** 87.525 **Lbs**

Equipment Z-213-106 **Waste Matrix Code** S5300 **IDC** RF-337 Plastics, Teflon, Washables, PVC

Recording Id 2RTR13-00168 **Procedure Id** INST-OI-12 **Revision** 52 **Approval Level** SPM

Is Test Pattern Resolution Ok? Yes **Start Side** A **Replicate** No **OIO** No

Audio Visual Ok? Yes **Operator** FKUCK

Result Comment Waste consists of polybottles and plastic bags.
AK concurs with the recommended IDC change from RF-004 to RF-337 for container 10503134. AKR-10-701 was revised (R8) and attached to NCR 82087 to support this change. CHD 11/12/13

Package

IDC Correct Yes **Recommended IDC** RF-337 **Summary Category** S5000

Idc Change Reason This waste is primarily plastic polybottles and bags.

Rigid Liner Present? No **LinerType** NO LINER

Liner Punctured? N/A **Sharp Objects?** No

Liner Lid Present? No **Sharp Objects Are Protected?** Yes

Liner Lid Deformed? N/A **Layers Of Confinement** 3

Fill Factor 95

Bag Closure Method Twisted and Taped

Liquids

Liquid Present? Yes **Internal Container with Liquid** No

Internal Container with Liquid 0 pints **LA Candidate** No

Liquid Between Liner & Drum 0 pints **Containerized Liquid**

Total Liquid Amount .25 pints **Containerized Liquid Amt** 0 pints

Other Liquids .25 pints **Comment** .25 pint in bagging around middle of drum

Prohibited Liquids Present No **Comment**

Contents-Drum or Box

	Value	Comment		Value	Comment
Lead?	No		**Mercury Present?**	No	
Wet Cell Batteries?	No		**Explosives?**	No	
Prohibited Compressed Gases?	No		**PCBs Present?**	No	
Aerosol Cans?	No		**PCB Mass (lbs)**	0	
Non-Mixed Hazardous Waste Present?	No		**Sealed Containers Over 4L?**	No	

Non-Radionuclide Pyrophoric Materials Present? No

Waste exhibiting the characteristics of Ignitability, Corrosivity or Reactivity Present? No

Wastes Incompatible with backfill, seal and panel closure materials, container and packaging materials,shipping container or other wastes? No

Impenetrable Dense Objects? No

Waste Material Items

Packaging Materials

Material Item	Quantity	Unit	Unit Wt(lbs)	Item Wt(lbs)
Drum plastic bag	2.000	EACH	1.000	2.000
55-GAL DRUM (17c)	1.000	EACH	59.000	59.000

Waste Items byWeight

Material Item	Quantity	Unit	Unit Wt(lbs)	Item Wt(lbs)
Plastic bag for waste	1.000	EACH	0.250	0.250

Waste Items by Volume

Material Item	Quantity	Unit	Unit Wt(lbs)	Item Wt(lbs)
Oil-Dri (Inside 55 gal drum)	24.000	PINTS	0.420	10.080
Liquids for Other Inorganics	0.250	PINTS	1.000	0.250

Batch Id RTR13-00280 **Container Id** 10503134 **Analysis Id** 0000093297

Waste Parameters

Waste Parameter	Remaining Weight %	Actual Weight Lbs
Iron-based Metals/Alloys	0.000	0.000
Aluminum-based Metals/Alloys	0.000	0.000
Other metals	0.000	0.000
Other Inorganic Materials	0.000	10.330
Cellulosics	0.000	0.000
Rubber	0.000	0.000
Plastic (Waste Materials)	100.000	77.195
Inorganic matrix	0.000	0.000
Organic matrix	0.000	0.000
Soils/gravel	0.000	0.000
Steel (packaging materials)	0.000	142.000
Plastic (packaging materials)	0.000	2.000
Cellulosics Packaging	0.000	0.000

Analysis Esignature History

Esig Approval Id	User Id	Esignature Date	Comment
2653249	CHINKLE	12-NOV-2013 13:44	This batch is returned for rework. AK does not concur with the recommended IDC change for container 10343052. CHD 11/12/13
2652218	FKUCK	10-NOV-2013 17:47	

Batch Id RTR13-00280 **Container Id** 10503128 **Analysis Id** 0000093298

Container Type C drum, 83 Gallon **Analysis Status** Pass

RTR Date 11-NOV-2013 08:44 **Gross Weight** 606.375 Lbs. **Net Weight** 462.375 Lbs.

Equipment Z-213-106 **Waste Matrix Code** S3114 **IDC** RF-003 Organic Setups, Oil Solids

Recording Id 2RTR13-00168 **Procedure Id** INST-OI-12 **Revision** 52 **Approval Level** SPM

Is Test Pattern Resolution Ok? Yes **Start Side** A **Replicate** No **OIO** No

Audio Visual Ok? Yes **Operator** KKEARN

Result Comment Waste consists of a sludge (rework) Updated PCB Mass. K.H. 03DEC13

Package

IDC Correct Yes **Recommended IDC** **Summary Category** S3000

Idc Change Reason

Rigid Liner Present? No **LinerType** NO LINER

Liner Punctured? N/A **Sharp Objects?** No

Liner Lid Present? No **Sharp Objects Are Protected?** Yes

Liner Lid Deformed? N/A **Layers Of Confinement** 2

Fill Factor 95

Bag Closure Method Twisted and Taped

Liquids

Liquid Present? No **Internal Container with Liquid** No

Internal Container with Liquid 0 pints **LA Candidate** No

Liquid Between Liner & Drum 0 pints **Containerized Liquid**

Total Liquid Amount 0 pints **Containerized Liquid Amt** 0 pints

Other Liquids 0 pints **Comment**

Prohibited Liquids Present No **Comment**

Contents-Drum or Box

	Value	Comment		Value	Comment
Lead?	No		**Mercury Present?**	No	
Wet Cell Batteries?	No		**Explosives?**	No	
Prohibited Compressed Gases?	No		**PCBs Present?**	Yes - Acceptable	RF-003
Aerosol Cans?	No		**PCB Mass (lbs)**	462.38	
Non-Mixed Hazardous Waste Present?	No		**Sealed Containers Over 4L?**	No	

Non-Radionuclide Pyrophoric Materials Present? No

Waste exhibiting the characteristics of Ignitability, Corrosivity or Reactivity Present? No

Wastes Incompatible with backfill, seal and panel closure materials, container and packaging materials,shipping container or other wastes? No

Impenetrable Dense Objects? No

Waste Material Items

Packaging Materials

Material Item	Quantity	Unit	Unit Wt(lbs)	Item Wt(lbs)
Drum plastic bag	2.000	EACH	1.000	2.000
55-GAL DRUM (17c)	1.000	EACH	59.000	59.000

Waste Items byWeight

Material Item	Quantity	Unit	Unit Wt(lbs)	Item Wt(lbs)
plastic sheeting	1.000	EACH	2.000	2.000

Waste Items by Volume

Material Item	Quantity	Unit	Unit Wt(lbs)	Item Wt(lbs)

Batch Id RTR13-00280 **Container Id** 10503128 **Analysis Id** 0000093298

Waste Parameters

Waste Parameter	Remaining Weight %	Actual Weight Lbs
Iron-based Metals/Alloys	0.000	0.000
Aluminum-based Metals/Alloys	0.000	0.000
Other metals	0.000	0.000
Other Inorganic Materials	0.000	0.000
Cellulosics	0.000	0.000
Rubber	0.000	0.000
Plastic (Waste Materials)	0.000	2.000
Inorganic matrix	0.000	0.000
Organic matrix	100.000	460.375
Soils/gravel	0.000	0.000
Steel (packaging materials)	0.000	142.000
Plastic (packaging materials)	0.000	2.000
Cellulosics Packaging	0.000	0.000

Analysis Esignature History

Esig Approval Id	User Id	Esignature Date	Comment
2664519	KHUGHES	03-DEC-2013 15:38	
2652242	KKEARN	11-NOV-2013 08:44	

Batch Id RTR13-00280 **Container Id** 10504408 **Analysis Id** 0000093300

Container Type 7A85 85 Gallon Open Head drum, DOT 7A **Analysis Status** Pass

RTR Date 11-NOV-2013 08:57 **Gross Weight** 562.275 Lbs. **Net Weight** 421.275 Lbs.

Equipment Z-213-106 **Waste Matrix Code** S3121 **IDC** RF-001 First Stage Sludge

Recording Id 2RTR13-00168 **Procedure Id** INST-OI-12 **Revision** 52 **Approval Level** SPM

Is Test Pattern Resolution Ok? Yes **Start Side** A **Replicate** No **OIO** No

Audio Visual Ok? Yes **Operator** KKEARN

Result Comment Waste consists of a sludge

Package

IDC Correct Yes **Recommended IDC** **Summary Category** S3000

Idc Change Reason

Rigid Liner Present? No **LinerType** NO LINER

Liner Punctured? N/A **Sharp Objects?** No

Liner Lid Present? No **Sharp Objects Are Protected?** Yes

Liner Lid Deformed? N/A **Layers Of Confinement** 2

Fill Factor 90

Bag Closure Method Twisted and Taped

Liquids

Liquid Present? No **Internal Container with Liquid** No

Internal Container with Liquid 0 pints **LA Candidate** No

Liquid Between Liner & Drum 0 pints **Containerized Liquid**

Total Liquid Amount 0 pints **Containerized Liquid Amt** 0 pints

Other Liquids 0 pints **Comment**

Prohibited Liquids Present No **Comment**

Contents-Drum or Box

	Value	Comment		Value	Comment
Lead?	No		**Mercury Present?**	No	
Wet Cell Batteries?	No		**Explosives?**	No	
Prohibited Compressed Gases?	No		**PCBs Present?**	No	
Aerosol Cans?	No		**PCB Mass (lbs)**	0	
Non-Mixed Hazardous Waste Present?	No		**Sealed Containers Over 4L?**	No	

Non-Radionuclide Pyrophoric Materials Present? No

Waste exhibiting the characteristics of Ignitability, Corrosivity or Reactivity Present? No

Wastes Incompatible with backfill, seal and panel closure materials, container and packaging materials,shipping container or other wastes? No

Impenetrable Dense Objects? No

Waste Material Items

Packaging Materials

Material Item	Quantity	Unit	Unit Wt(lbs)	Item Wt(lbs)
Drum plastic bag	2.000	EACH	1.000	2.000
55-GAL DRUM (17c)	1.000	EACH	59.000	59.000

Waste Items byWeight

Material Item	Quantity	Unit	Unit Wt(lbs)	Item Wt(lbs)
metal plate	1.000	EACH	8.000	8.000

Waste Items by Volume

Material Item	Quantity	Unit	Unit Wt(lbs)	Item Wt(lbs)
Oil-Dri (Inside 55 gal drum)	2.000	PINTS	0.420	0.840

Batch Id RTR13-00280 **Container Id** 10504408 **Analysis Id** 0000093300

Waste Parameters

Waste Parameter	Remaining Weight %	Actual Weight Lbs
Iron-based Metals/Alloys	0.000	8.000
Aluminum-based Metals/Alloys	0.000	0.000
Other metals	0.000	0.000
Other Inorganic Materials	0.000	0.840
Cellulosics	0.000	0.000
Rubber	0.000	0.000
Plastic (Waste Materials)	0.000	0.000
Inorganic matrix	100.000	412.435
Organic matrix	0.000	0.000
Soils/gravel	0.000	0.000
Steel (packaging materials)	0.000	139.000
Plastic (packaging materials)	0.000	2.000
Cellulosics Packaging	0.000	0.000

Analysis Esignature History

Esig Approval Id	User Id	Esignature Date	Comment
2652245	KKEARN	11-NOV-2013 08:57	

Batch Id RTR13-00280 **Container Id** 10504979 **Analysis Id** 0000093302

Container Type C drum, 83 Gallon **Analysis Status** Pass

RTR Date 11-NOV-2013 09:53 **Gross Weight** 692.370 **Lbs.** **Net Weight** 548.370 **Lbs**

Equipment Z-213-106 **Waste Matrix Code** S3121 **IDC** RF-001 First Stage Sludge

Recording Id 2RTR13-00168 **Procedure Id** INST-OI-12 **Revision** 52 **Approval Level** SPM

Is Test Pattern Resolution Ok? Yes **Start Side** A **Replicate** No **OIO** No

Audio Visual Ok? Yes **Operator** KKEARN

Result Comment Waste consists of a sludge

Package

IDC Correct Yes **Recommended IDC** **Summary Category** S3000

Idc Change Reason

Rigid Liner Present? No **LinerType** NO LINER

Liner Punctured? N/A **Sharp Objects?** No

Liner Lid Present? No **Sharp Objects Are Protected?** Yes

Liner Lid Deformed? N/A **Layers Of Confinement** 2

Fill Factor 90

Bag Closure Method Twisted and Taped

Liquids

Liquid Present? Yes **Internal Container with Liquid** No

Internal Container with Liquid 0 pints **LA Candidate** No

Liquid Between Liner & Drum 0 pints **Containerized Liquid**

Total Liquid Amount 3 pints **Containerized Liquid Amt** 0 pints

Other Liquids 3 pints **Comment** at the bottom of the waste

Prohibited Liquids Present No **Comment**

Contents-Drum or Box

	Value	Comment		Value	Comment
Lead?	Yes, Rejected	lead liner	**Mercury Present?**	No	
Wet Cell Batteries?	No		**Explosives?**	No	
Prohibited Compressed Gases?	No		**PCBs Present?**	No	
Aerosol Cans?	No		**PCB Mass (lbs)**	0	
Non-Mixed Hazardous Waste Present?	No		**Sealed Containers Over 4L?**	No	

Non-Radionuclide Pyrophoric Materials Present? No

Waste exhibiting the characteristics of Ignitability, Corrosivity or Reactivity Present? No

Wastes Incompatible with backfill, seal and panel closure materials, container and packaging materials,shipping container or other wastes? No

Impenetrable Dense Objects? Yes - Unacceptable lead liner

Waste Material Items

Packaging Materials

Material Item	Quantity	Unit	Unit Wt(lbs)	Item Wt(lbs)
Drum plastic bag	2.000	EACH	1.000	2.000
55-GAL DRUM (17c)	1.000	EACH	59.000	59.000

Waste Items byWeight

Material Item	Quantity	Unit	Unit Wt(lbs)	Item Wt(lbs)
Drum lead-liner (1/16"x28"x72")	1.000	EACH	50.000	50.000

Waste Items by Volume

Material Item	Quantity	Unit	Unit Wt(lbs)	Item Wt(lbs)
Liquids for Inorganic Matrix	3.000	PINTS	1.000	3.000

Batch Id RTR13-00280 **Container Id** 10504979 **Analysis Id** 0000093302

Waste Parameters

Waste Parameter	Remaining Weight %	Actual Weight Lbs
Iron-based Metals/Alloys	0.000	0.000
Aluminum-based Metals/Alloys	0.000	0.000
Other metals	0.000	50.000
Other Inorganic Materials	0.000	0.000
Cellulosics	0.000	0.000
Rubber	0.000	0.000
Plastic (Waste Materials)	0.000	0.000
Inorganic matrix	100.000	498.370
Organic matrix	0.000	0.000
Soils/gravel	0.000	0.000
Steel (packaging materials)	0.000	142.000
Plastic (packaging materials)	0.000	2.000
Cellulosics Packaging	0.000	0.000

Analysis Esignature History

Esig Approval Id	User Id	Esignature Date	Comment
2652280	KKEARN	11-NOV-2013 09:53	

Batch Id RTR13-00280 **Container Id** 10504457 **Analysis Id** 0000093303

Container Type C drum, 83 Gallon **Analysis Status** Pass

RTR Date 11-NOV-2013 10:08 **Gross Weight** 560.070 **Lbs.** **Net Weight** 416.070 **Lbs.**

Equipment Z-213-106 **Waste Matrix Code** S3121 **IDC** RF-002 Second Stage Sludge

Recording Id 2RTR13-00168 **Procedure Id** INST-OI-12 **Revision** 52 **Approval Level** SPM

Is Test Pattern Resolution Ok? Yes **Start Side** A **Replicate** No **OIO** No

Audio Visual Ok? Yes **Operator** KKEARN

Result Comment Waste consists of a sludge

Package

IDC Correct Yes **Recommended IDC** **Summary Category** S3000

Idc Change Reason

Rigid Liner Present? No **LinerType** NO LINER

Liner Punctured? N/A **Sharp Objects?** No

Liner Lid Present? No **Sharp Objects Are Protected?** Yes

Liner Lid Deformed? N/A **Layers Of Confinement** 2

Fill Factor 95

Bag Closure Method Twisted and Taped

Liquids

Liquid Present? No **Internal Container with Liquid** No

Internal Container with Liquid 0 pints **LA Candidate** No

Liquid Between Liner & Drum 0 pints **Containerized Liquid**

Total Liquid Amount 0 pints **Containerized Liquid Amt** 0 pints

Other Liquids 0 pints **Comment**

Prohibited Liquids Present No **Comment**

Contents-Drum or Box

	Value	Comment		Value	Comment
Lead?	No		**Mercury Present?**	No	
Wet Cell Batteries?	No		**Explosives?**	No	
Prohibited Compressed Gases?	No		**PCBs Present?**	No	
Aerosol Cans?	No		**PCB Mass (lbs)**	0	
Non-Mixed Hazardous Waste Present?	No		**Sealed Containers Over 4L?**	No	

Non-Radionuclide Pyrophoric Materials Present? No

Waste exhibiting the characteristics of Ignitability, Corrosivity or Reactivity Present? No

Wastes Incompatible with backfill, seal and panel closure materials, container and packaging materials,shipping container or other wastes? No

Impenetrable Dense Objects? No

Waste Material Items

Packaging Materials

Material Item	Quantity	Unit	Unit Wt(lbs)	Item Wt(lbs)
Drum plastic bag	2.000	EACH	1.000	2.000
55-GAL DRUM (17c)	1.000	EACH	59.000	59.000

Waste Items byWeight

Material Item	Quantity	Unit	Unit Wt(lbs)	Item Wt(lbs)
poly bottle	1.000	EACH	1.000	1.000

Waste Items by Volume

Material Item	Quantity	Unit	Unit Wt(lbs)	Item Wt(lbs)
Oil-Dri (Inside 55 gal drum)	2.000	PINTS	0.420	0.840

Batch Id RTR13-00280 **Container Id** 10504457 **Analysis Id** 0000093303

Waste Parameters

Waste Parameter	Remaining Weight %	Actual Weight Lbs
Iron-based Metals/Alloys	0.000	0.000
Aluminum-based Metals/Alloys	0.000	0.000
Other metals	0.000	0.000
Other Inorganic Materials	0.000	0.840
Cellulosics	0.000	0.000
Rubber	0.000	0.000
Plastic (Waste Materials)	0.000	1.000
Inorganic matrix	100.000	414.230
Organic matrix	0.000	0.000
Soils/gravel	0.000	0.000
Steel (packaging materials)	0.000	142.000
Plastic (packaging materials)	0.000	2.000
Cellulosics Packaging	0.000	0.000

Analysis Esignature History

Esig Approval Id	User Id	Esignature Date	Comment
2652308	KKEARN	11-NOV-2013 10:08	

*****End of RTR Analysis Report*****

AMWTP

Advanced Mixed Waste Treatment Project

AMWTP

RTR Replicate Comparison Report

Date: 11-Sep-2014

Time: 06:34

RTR Batch Id: RTR13-00280 **Container Id:** 10503133 **Equipment Id:** Z-213-106

Container type Description: **drum, 83 Gallon** Gen-IDC: **RF-003** Gross Weight(Lbs): **648.27**

	Original Analysis		Replicate Analysis	
Analysis Id / Date:	0000093291	10-NOV-2013 15:46	0000093295	10-NOV-2013 16:48
Procedure /Revision:	INST-OI-12	52	INST-OI-12	52
Recording Media Id:	2RTR13-00168		2RTR13-00168	
Starting Position:	A		A	
Is Test Pattern Resolution Ok?	Y		Y	
Audio Visual Ok?	Y		Y	
Personnel Name:	FRANK KUCK		AARON ATWELL	
IDC Ok? / Recommended IDC:	Y		Y	
IDC Change Reason:				
Summary Category / Waste matrix Code:	S3000	S3114	S3000	S3114
Packaging				
Rigid Liner Present?	N		N	
Liner Type Code:	NO LINER		NO LINER	
Liner Punctured:	NA		NA	
Liner Lid Deformed:	NA		NA	
Layers Of Confinement:	2		2	
Sharp Objects?	N		N	
Sharp Objects Protected?	Y		Y	
Fill Factor(%):	96		95	
Bag Closure Method:	Twisted and Taped		Twisted and Taped	
Liner Lid Present?:	N		N	
Liquids: (Volume in Pints)				
Liquid Present?	N		N	
Internal Container with Liquid?	0		0	
Containerized Liquid	N		N	
Other Liquids:	0		0	
Internal Container with Liquid Amt:	0		0	
Liquid Between Liner and Drum:	0		0	
Containerized Liquid:	0		0	
Total Liquid Amount:	0		0	
LA Candidate?	N		N	
Prohibited Liquids Present	N		N	

Contents:	Y/N	Comments	Y/N	Comments
Sealed Containers over 4L?	N		N	
Lead Present?	N		N	
Explosives Present?	N		N	
Mercury Present?	N		N	
Wet Cell Batteries Detected?	N		N	

AMWTP

Advanced Mixed Waste Treatment Project

AMWTP

RTR Replicate Comparison Report

Date: 11-Sep-2014

Time: 06:34

RTR Batch Id: RTR13-00280 **Container Id:** 10503133 **Equipment Id:** Z-213-106

	Original Analysis		Replicate Analysis	
Prohibited Compressed Gas Present?	N		N	
PCBs Present?	Y	No liquid	Y	No liquid in waste
PCB Mass (lbs)	504.27		504.27	
Non-Radionuclide Pyrophoric Materials Present?	N		N	
Waste exhibiting the characteristics of ignitability, Corrosivity or reactivity Present?	N		N	
Non-Mixed Hazardous Waste Present?	N		N	
Waste Incompatibles with backfill, Seal and panel closure materials, container and packaging material, shipping container or other wastes?	N		N	
Impenetrable Dense Objects?	N		N	
Result Comment:	Waste appears to be sludge.		Waste appears to be sludge.	

----------E-signature----------

Esig Approval ID	User ID	Signature Date	Comment
2659742	MSORENSON	25-NOV-13	There were no significant differences between the exams. Replicate comparison complete.

-----End of RTR Replicate Comparison Report-----

DIVIDER

PAGE

AMWTP
Advanced Mixed Waste Treatment Project

AMWTP

Batch Report Coversheet

Date: 11-Sep-2014

Time: 07:04

Batch Type Real Time Radiography
Batch Report No. RTR13-00324
Batch Id RTR13-00324
Open Date 15-DEC-13 09:03:01
Close Date 16-DEC-13 16:34:56
Batch Status AP
Test Facility Idaho AMWTP
Equipment Id Z-213-101 RTR Station Left (213-101)

Container Id	IDC	Analysis Id	Date Examined	QC Type	Analysis Status	Operator
10357111	RF-760	0000094276	15-DEC-13 09:03:01	Original	P	SETH OLDHAM
10359474	RF-002	0000094277	15-DEC-13 10:14:24	Original	P	DANNY GREEN
10368229	RF-760	0000094278	15-DEC-13 11:00:32	Original	P	KRISANN HUGHES
10452573	UN-00A	0000094279	15-DEC-13 11:32:40	Original	P	KRISANN HUGHES
10366647	RF-760	0000094280	15-DEC-13 12:10:10	Original	P	SETH OLDHAM
10444894	RF-760	0000094281	15-DEC-13 12:33:19	Original	P	DANNY GREEN
10372116	RF-330	0000094282	15-DEC-13 13:28:17	Original	P	SAMUEL PHILLIPS
10357099	RF-760	0000094283	15-DEC-13 13:56:43	Original	P	SETH OLDHAM
10367220	RF-760	0000094284	15-DEC-13 15:05:00	Original	P	SETH OLDHAM
10369045	RF-760	0000094285	15-DEC-13 16:21:50	Original	P	SETH OLDHAM
10366375	RF-760	0000094286	15-DEC-13 16:35:18	Original	P	SETH OLDHAM
10352602	RF-760	0000094287	15-DEC-13 17:40:14	Original	P	SETH OLDHAM
10357264	RF-760	0000094289	16-DEC-13 11:15:57	Original	P	KRISANN HUGHES
10359822	RF-760	0000094290	16-DEC-13 11:31:45	Original	P	KRISANN HUGHES
10366365	RF-760	0000094291	16-DEC-13 11:56:19	Original	P	MICHAEL RICKS
10447245	RF-760	0000094292	16-DEC-13 13:19:38	Original	P	SETH OLDHAM
10355574	RF-001	0000094293	16-DEC-13 13:49:58	Original	P	SHAWN JORDAN
10355578	RF-002	0000094294	16-DEC-13 14:26:24	Original	P	SHAWN JORDAN
10355574	RF-001	0000094295	16-DEC-13 15:32:39	Replicate / Duplicate	P	CONLEY BEEBE
10355578	RF-002	0000094296	16-DEC-13 16:05:39	RTR OIO	P	CONLEY BEEBE
10357734	RF-002	0000094297	16-DEC-13 16:34:28	Original	P	SHAWN JORDAN
10359474	RF-002	0000316059	20-MAR-14 09:47:54	Supplemental	P	ROBERT PURCELL

INFORMATION ONLY

**********Batch Comments**********

Written By	Date	Comment
SJORDAN	16-DEC-13 16:34:59	Esigned.
CHINKLE	19-DEC-13 12:26:31	19-DEC-13 CHINKLE AKE This batch is returned for rework. AK does not concur with the recommended IDC change for containers 10452573, 10447245, 10369045, 10368229, 10367220, 10366647, 10366375, 10357111, 10357099 and10352602. CHD 12/19/13
SOLDHAM	23-DEC-13 09:33:25	Rework complete
CHINKLE	06-JAN-14 07:43:26	19-DEC-13 CHINKLE AKE This batch is returned for rework. AK does not concur with the recommended IDC change for containers 10452573, 10447245, 10369045, 10368229, 10367220, 10366647, 10366375, 10357111, 10357099 and10352602. CHD 12/19/13 06-JAN-14 CHINKLE AKE Batch is promoted. chd 01/06/14
JSIMONSON	26-JAN-14 12:03:35	This batch was validated electronically only per MP-TRUW-8.8.
JSIMONSON	26-JAN-14 12:12:58	Note: Information only. The temperature in WMF-634 dipped slightly below 64.4 degrees (F) on 16 December 2014, but the temperature did not reach zero degrees (F), and all drums in this batch had already met the pre-heat requirements. This dip in temperature had no adverse affect on the RTR analysis data for the drums in batch RTR13-00324.
JSIMONSON	26-JAN-14 12:16:10	Rework: Drum 10368229. RTR Operator recommended IDC UN-00A, but AK and RTR SME did not agree and recommended IDC RF-760, Pad 1 Cells 1 & 2 RFP Debris. Please review, (1) add a statement to the Result Comment to disregard the Operator's description of the waste, waste appears to be primarily Other Inorganic Materials in the form of tiles and firebrick; (2) answer PCBs Present "No;" (3) ensure PCBs Present comment is blank; (4) correct Impenetrable Dense Objects comment to "Individually bagged tiles and firebrick," or words to that effect; and (5) correct Remaining Contents of Container to 100% Other Inorganic Materials, as necessary.
JSIMONSON	26-JAN-14 12:18:54	Rework: Drum 1042573. RTR Operator recommended IDC-000 but AK disagreed and conservatively recommended IDC UN-00A. Please review; (1) enter a statement into the Result Comment to disregard the Operator's description of the waste: waste has been conservatively assigned IDC UN-00A by AK and is described as Undefined Homogeneous Solids; (2) answer PCBs Present "Yes - Acceptable," with comment "IDC UN-00A, with no liquids," or words to that effect, (3) enter the net weight of the drum (277.37 lbs) as the PCB Mass; and (4) change the Remaining Contents of Container to 100% Organic Matrix, as necessary.
JSIMONSON	26-JAN-14 12:20:02	Rework: Drum 10357264. RTR Operator reversed the waste parameter split for respirator filters. Please review, delete respirator filters, and Add Material Item, respirator filters, by weight, 2 lbs, quantity 1, 70% Aluminum-based Metals/Alloys, 30% Cellulosics, as necessary.
JSIMONSON	26-JAN-14 12:20:23	Rework: Drum 10359822. RTR Operator reversed the waste parameter split for respirator filters. Please review, delete respirator filters, and Add Material Item, respirator filters, by weight, 5 lbs, quantity 1, 70% Aluminum-based Metals/Alloys, 30% Cellulosics, as necessary.
JSIMONSON	26-JAN-14 12:34:45	Note: Please disregard rework comment for drum 1042573. Correct drum number is 10452573.
JSIMONSON	26-JAN-14 12:40:32	Demoted to Operations for rework.
KHUGHES	26-JAN-14 14:46:07	Compleled rework
JSIMONSON	26-JAN-14 15:34:40	Rework was performed completely and satisfactorily by a qualified operator.
CHINKLE	27-JAN-14 05:59:56	19-DEC-13 CHINKLE AKE This batch is returned for rework. AK does not concur with the recommended IDC change for containers 10452573, 10447245, 10369045, 10368229, 10367220, 10366647, 10366375, 10357111, 10357099 and10352602. CHD 12/19/13 06-JAN-14 CHINKLE AKE Batch is promoted. chd 01/06/14 27-JAN-14 CHINKLE AKE Batch is promoted. chd 1/27/14
JSIMONSON	27-JAN-14 12:50:40	Promoted to SPM.
RWALKER	05-FEB-14 09:53:34	SPM validation complete. Promote batch.

**********RTR/VE Update (RVU) Comments**********

Written By	Date	Comment
DLEE	20-MAR-14 11:39:05	This RVU was validated to MP-TRUW-8.8.
DLEE	20-MAR-14 11:39:27	No rework for RVU 10359474 analysis Id 0000316059.
DLEE	20-MAR-14 11:40:00	Promote to SPM.
DMARQUARDT	20-MAR-14 13:01:02	Promote.
DMARQUARDT	20-MAR-14 13:01:36	Reviewed and validated. Approve.

**********Batch E-Signature History**********

Approval ID	User ID	Signature Date	Comment
2669144	SJORDAN	16-DEC-2013 16:34:59	
2670865	SOLDHAM	23-DEC-2013 09:33:25	Rework complete
2679817	JSIMONSON	26-JAN-2014 12:40:33	Demoted to Operations for rework.
2679888	KHUGHES	26-JAN-2014 14:46:07	Compleled rework
2680311	JSIMONSON	27-JAN-2014 12:50:40	Promoted to SPM.
2688381	RWALKER	05-FEB-2014 09:53:34	SPM validation complete. Promote batch.

**********RTR/VE Update (RVU) E-Signature History**********

Approval ID	User ID	Signature Date	Comment
2719622	DLEE	20-MAR-2014 11:40:01	Promote to SPM.
2719652	DMARQUARDT	20-MAR-2014 13:01:36	Reviewed and validated. Approve.

***** End of Batch Report Coversheet Report *****

AMWTP
Advanced Mixed Waste Treatment Project

AMWTP

Non-Conformance Report

Date: 11-Sep-2014
Time: 07:04

*****Batch NCR(s)*****

Batch Type	RTR	Batch ID	RTR13-00324		
Trackwise Number		**Status**		**Opened Date**	**Closed Date**

*****Container NCR(s)*****

Container ID *or related Batch ID*	Trackwise Number	Status	Opened Date	Closed Date
10352602	82895	CLOSED	15-DEC-13	06-FEB-14
10355574	24793	CLOSED	10-DEC-06	06-FEB-14
10355574	82907	CLOSED	16-DEC-13	12-JUN-14
10355578	46742	CLOSED	11-AUG-09	22-APR-14
10355578	82908	CLOSED	16-DEC-13	22-APR-14
10357099	82892	CLOSED	15-DEC-13	27-MAR-14
10357734	8909	CLOSED	13-AUG-04	06-FEB-14
10359474	84742	CLOSED	20-MAR-14	20-MAR-14
10366647	82889	CLOSED	15-DEC-13	06-FEB-14
10367220	82893	CLOSED	15-DEC-13	13-MAR-14
10368229	82885	CLOSED	15-DEC-13	14-APR-14
10369045	82894	CLOSED	15-DEC-13	06-FEB-14
10444894	82890	OPEN	15-DEC-13	
10444894	82891	OPEN	15-DEC-13	
10452573	82886	OPEN	15-DEC-13	
10452573	82887	OPEN	15-DEC-13	
10452573	82888	OPEN	15-DEC-13	

*****End of Non-Conformance Report*****

AMWTP
Advanced Mixed Waste Treatment Project

AMWTP

Checklist Report

Date: 11-Sep-2014
Time: 07:04

Batch Id RTR13-00324 **Open Date** 15-DEC-13 **Close Date** 16-DEC-13

Reviewer JAY SIMONSON **Approval Level** Independent Technical Reviewer
Approval Date 26-JAN-14 **Review Iteration** 1

Question Text	Answer	Requirement	Comment
1. Is the Batch Data Report (BDR) and Quality Assurance (QA) documentation complete with the following: o Real-Time Radiography (RTR) Batch Coversheet o Table of Contents (manual review only) o RTR Analysis reports o Replicate Scan o Replicate Comparison o Independent Observation o ITR checklist (Form-1412, manual review only) o Form-1491, Batch Data Report Supplemental Comment Form (manual review only) o Associated NCRs (referenced in Waste Tracking System [WTS]) o Audio/Video Recording References?	Yes		
2. Are there 20 containers or less in the batch?	Yes		
3. Was the image quality indicator (IQI) satisfactory?	Yes		
4. Does every container in the batch reference an audio/video recording?	Yes		
5. Is there a completed radiography data analysis for each container in the batch?	Yes		
6. Was each RTR Operator qualified at the time of the radiography event?	Yes		
7. Was the data generated in a technically correct manner using the correct revision of INST-OI-12, Real-Time Radiography Operations (Drum)?	Yes		
8. Was the correct procedure and revision documented on all analysis reports?	Yes		
9. Has the E-signature History review been performed?	Yes		
10. Does the RTR operator confirm that the physical form matched the waste stream description and waste matrix code?	Yes		See batch comments and individual drum Result Comments.
11. Does the packaging weight plus the net weight equal the gross weight of the container in the estimated waste material parameters?	Yes		
12. Were all entries into the waste material items section assigned to the correct waste material parameters?	Yes		See batch comments.
13. Has the description of rigid liners and layers of confinement been properly documented, as applicable?	Yes		
14. Was the presence or absence of prohibited items properly documented?	Yes		
15. If prohibited items were identified, have appropriate nonconformance reports (NCRs) been generated?	Yes		See NCR report.
16. Were the containers examined between October and April in compliance with the preheat requirements?	Yes		
17. Were all proper units and significant figures used for all reported volumes/weights?	Yes		
18. Was there a valid replicate scan performed (at least one container per day, or once per testing batch, whichever is less frequent)? o Record the container number, the replicate observation date in the comment section of this checklist. o Record any issues or concerns in the batch comment section.	Yes		On 16-Dec-2013 a qualified operator performed the Replicate analysis for batch RTR13-00324 on container 10355574. There were small differences in the Fill Factor percentage, the Packaging Materials, the liquid amounts, and the Waste Items by Volume between the Original analysis and the Replicate analysis. These differences do not affect the original disposition of the container or the DQOs. I agree with the Original Operator. No rework will be performed on the Replicate

Batch Id RTR13-00324 **Open Date** 15-DEC-13 **Close Date** 16-DEC-13

Reviewer JAY SIMONSON **Approval Level** Independent Technical Reviewer

Approval Date 26-JAN-14 **Review Iteration** 1

Question Text	Answer	Requirement	Comment
			analysis.
19. Was there a valid Operator Independent Observation (OIO) (not the replicate) performed (at least one container per day, or once per testing batch, whichever is less frequent)? o Record the container number and the OIO date in the comment section of this checklist. o Record any issues or concerns in the batch comment section.	Yes		On 16-Dec-2013 a qualified operator performed the OIO analysis for batch RTR13-00324 on container 10355578. There were small differences in the Fill Factor percentage, the liquid amounts, and the Waste Items by Volume between the Original analysis and the OIO analysis. These differences do not affect the original disposition of the container or the DQOs. I agree with the Original Operator. No rework will be performed on the OIO analysis.
20. Were any significant differences identified that would affect the original disposition of the replicate and OIO, or affect data quality objectives (DQOs)? If so, ensure an NCR was generated and WTS flagged.	No		
21. Were the RTR quality assurance objectives (QAOs) met? o Precision o Accuracy o Completeness o Comparability	Yes		
22. Were any NCRs generated for containers containing prohibited items, or any non-conforming conditions that failed to meet DQOs or QAOs? o If so, include the NCRs, as appropriate, in the BDR.	Yes		See NCR report.
23. Were the rework requirements clearly identified in WTS or on the BDR?	Yes		See batch comments.

Batch Id RTR13-00324 **Open Date** 15-DEC-13 **Close Date** 16-DEC-13

Reviewer JAY SIMONSON **Approval Level** Independent Technical Reviewer

Approval Date 27-JAN-14 **Review Iteration** 2

Question Text	Answer	Requirement	Comment
1. Is the Batch Data Report (BDR) and Quality Assurance (QA) documentation complete with the following: o Real-Time Radiography (RTR) Batch Coversheet o Table of Contents (manual review only) o RTR Analysis reports o Replicate Scan o Replicate Comparison o Independent Observation o ITR checklist (Form-1412, manual review only) o Form-1491, Batch Data Report Supplemental Comment Form (manual review only) o Associated NCRs (referenced in Waste Tracking System [WTS]) o Audio/Video Recording References?	Yes		
2. Are there 20 containers or less in the batch?	Yes		
3. Was the image quality indicator (IQI) satisfactory?	Yes		
4. Does every container in the batch reference an audio/video recording?	Yes		
5. Is there a completed radiography data analysis for each container in the batch?	Yes		
6. Was each RTR Operator qualified at the time of the radiography event?	Yes		
7. Was the data generated in a technically correct manner using the correct revision of INST-OI-12, Real-Time Radiography Operations (Drum)?	Yes		
8. Was the correct procedure and revision documented on all analysis reports?	Yes		
9. Has the E-signature History review been performed?	Yes		
10. Does the RTR operator confirm that the physical form matched the waste stream description and waste matrix code?	Yes		See batch comments and individual drum Result Comments.
11. Does the packaging weight plus the net weight equal the gross weight of the container in the estimated waste material parameters?	Yes		
12. Were all entries into the waste material items section assigned to the correct waste material parameters?	Yes		See batch comments.
13. Has the description of rigid liners and layers of confinement been properly documented, as applicable?	Yes		
14. Was the presence or absence of prohibited items properly documented?	Yes		
15. If prohibited items were identified, have appropriate nonconformance reports (NCRs) been generated?	Yes		See NCR report.
16. Were the containers examined between October and April in compliance with the preheat requirements?	Yes		
17. Were all proper units and significant figures used for all reported volumes/weights?	Yes		
18. Was there a valid replicate scan performed (at least one container per day, or once per testing batch, whichever is less frequent)? o Record the container number, the replicate observation date in the comment section of this checklist. o Record any issues or concerns in the batch comment section.	Yes		On 16-Dec-2013 a qualified operator performed the Replicate analysis for batch RTR13-00324 on container 10355574. There were small differences in the Fill Factor percentage, the Packaging Materials, the liquid amounts, and the Waste Items by Volume between the Original analysis and the Replicate analysis. These differences do not affect the original disposition of the container or the DQOs. I agree with the Original Operator. No rework will be performed on the Replicate

Batch Id RTR13-00324 **Open Date** 15-DEC-13 **Close Date** 16-DEC-13

Reviewer JAY SIMONSON **Approval Level** Independent Technical Reviewer
Approval Date 27-JAN-14 **Review Iteration** 2

Question Text	Answer	Requirement	Comment
			analysis.
19. Was there a valid Operator Independent Observation (OIO) (not the replicate) performed (at least one container per day, or once per testing batch, whichever is less frequent)? o Record the container number and the OIO date in the comment section of this checklist. o Record any issues or concerns in the batch comment section.	Yes		On 16-Dec-2013 a qualified operator performed the OIO analysis for batch RTR13-00324 on container 10355578. There were small differences in the Fill Factor percentage, the liquid amounts, and the Waste Items by Volume between the Original analysis and the OIO analysis. These differences do not affect the original disposition of the container or the DQOs. I agree with the Original Operator. No rework will be performed on the OIO analysis.
20. Were any significant differences identified that would affect the original disposition of the replicate and OIO, or affect data quality objectives (DQOs)? If so, ensure an NCR was generated and WTS flagged.	No		
21. Were the RTR quality assurance objectives (QAOs) met? o Precision o Accuracy o Completeness o Comparability	Yes		
22. Were any NCRs generated for containers containing prohibited items, or any non-conforming conditions that failed to meet DQOs or QAOs? o If so, include the NCRs, as appropriate, in the BDR.	Yes		See NCR report.
23. Were the rework requirements clearly identified in WTS or on the BDR?	Yes		See batch comments.

Batch Id RTR13-00324 **Open Date** 15-DEC-13 **Close Date** 16-DEC-13

Reviewer REED WALKER **Approval Level** SPM Data Validation

Approval Date 05-FEB-14 **Review Iteration** 1

Question Text	Answer	Requirement	Comment
(1) Has the batch received a Data Generation Level Independent Technical Review?	Yes	MP-TRUW-8.2, C3-10b(1)	
(2) Is the Independent Technical Review checklist complete?	Yes	MP-TRUW-8.2, C3-10b(1)	
(3) When identified, were polychlorinated biphenyls (PCBs), mercury, lead, or other hazardous contaminants consistent with the waste stream acceptable knowledge (AK) Summary Report(s) and/or AK documentation?	Yes	MP-TRUW-8.2, C4-3	
(4) Are any ignitable, corrosive, or reactive wastes identified in this waste?	No	MP-TRUW-8.2, C4-3	
(5) Are the packaging configurations identified on the real-time radiography (RTR) consistent with the waste stream AK Summary Report(s) and/or AK documentation?	Yes	MP-TRUW-8.2, C4-3	
(6) Do the containers in this batch contain typical waste items consistent with waste stream AK Summary Report(s) and/or AK documentation?	Yes	MP-TRUW-8.2, C4-3	
(7) Are the Waste Matrix Codes (WMCs) and physical form descriptions consistent with AK?	Yes	MP-TRUW-8.2, C4-3	
(8) Have all AK discrepancies been resolved and have all AK Resolution checklists been approved? Reference all waste stream AK documentation used in review of this data package.	Yes	MP-TRUW-8.2, C4-3	RPT-TRUW-05, RPT-TRUW-06, RPT-TRUW-12, RPT-TRUW-56
(9) Have all applicable Quality Assurance Objectives (QAOs) been met, including precision, accuracy, completeness, and comparability, by using the appropriate acceptance criteria for each as specified in MP-TRUW-8.2, Quality Assurance Project Plan Section C3-4? Precision ¿ Verified prior to use by tuning precisely enough to demonstrate compliance with QAOs through viewing an image test pattern, as evidenced by a satisfactory Image Quality Indicator (IQI). ¿ Have discrepancies, if any, between radiography operators been reconciled? Accuracy ¿ Use of a target to tune the image for maximum sharpness as evidenced by a satisfactory IQI and by requiring operators to successfully identify 100% of the required items in a training container during initial and subsequent qualifications. Completeness ¿ An audio/videotape (or equivalent media) of the radiography examination and a validated radiography data form will be obtained for 100% of the retrievably stored waste container in the program for all waste containers subject to radiography. Comparability ¿ Use of standardized radiography procedures and operator qualifications.	Yes	MP-TRUW-8.2, C3-4a	
(10) Do the waste container contents match the WMC, waste stream description and identify the absence of prohibited items?	Yes	MP-TRUW-8.2, C1-3 and B3-11	
(11) If residual liquids exist in the container, is an estimate of quantity given?	Yes	MP-TRUW-8.2, C1-3	
(12) Do the individual container reports contain the (a) IDC, (b) Waste Matrix Code, (c) audio/video recording reference, (d) gross container weight, (e) waste material parameter weights, and (f) signature and date of examination?	Yes	MP-TRUW-8.2, C1-3 and C3-11a	
(13) Have the IDC, WMC, and/or waste stream for all	No	MP-TRUW-8.2, C1-3 and	Containers 10357111, 10368229, 10452573,

Batch Id RTR13-00324 **Open Date** 15-DEC-13 **Close Date** 16-DEC-13

Reviewer REED WALKER **Approval Level** SPM Data Validation

Approval Date 05-FEB-14 **Review Iteration** 1

Question Text	Answer	Requirement	Comment
containers in the batch remained the same as originally assigned by the historical designation? If not, note the container number in the comment field and notify the Acceptable Knowledge Expert (AKE) if NCR does not exist on the WMC and IDC change.		C3-4a	10366647, 10357099, 10367220, 10369045, 10366375, 10352602, 10357264, 10359822, 10366365 and 10447245 all went to AK for an IDC change; no AKR or NCR required.
(14) Was a replicate scan performed by an independent operator on at least one container per day or once per testing batch, whichever is less frequent, by a qualified radiography operator that was not involved in the original scan of the waste container?	Yes	MP-TRUW-8.2, B1-3, C3-4a, and C3-10b(1)	
(15) Has an independent observation of one scan (not the replicate) been performed by a qualified operator that was not involved in the original scan of the waste container, at a rate of once per day or once per batch, whichever is less frequent? Record date of observation and any issues or concerns in the comment section.	Yes	MP-TRUW-8.2, C1-3 and C3-4a	Container 10355578 was examined on 16DEC2013 with no issues identified.
(16) Did personnel having current qualifications perform all RTR examinations?	Yes	MP-TRUW-8.1, Appendix F	
(17) Verify the correct procedure and revision number were used for all containers in this batch.	Yes	MP-TRUW-8.2, C3-4a	
(18) Verify the audio and video checks were performed and are satisfactory.	Yes	MP-TRUW-8.2, C3-4a	
(19) Verify that there are 20 or fewer containers in the batch.	Yes	MP-TRUW-8.2, C1-3	
(20) Does the data for all containers within this batch meet the review, validation, and verification requirements? · Are proper units (e.g. Liters or pounds) and significant figure used? · Is the BDR complete (all pages identified in the BDR and numbered accordingly)? - RTR Batch Coversheet - Table of Contents (manual review only) - RTR Analysis reports - Replicate Scan - Replicate Comparison - Independent Observation - Form-1412, ITR checklist - Associated NCRs - Form, 1491, Batch Data Report Supplemental Comment Form, as applicable - Audio/Video Recording References	Yes	MP-TRUW-8.2, C3 10b(2)	
(21) Review all NCR(s) (open and closed). Can the batch be approved?	Yes	MP-TRUW-8.2, C3-13	
(22) Is all data associated with this BDR acceptable for signature release?	Yes	MP-TRUW-8.2, C3 10b(2)	

Batch Id RTR13-00324 **Open Date** 15-DEC-13 **Close Date** 16-DEC-13

Esignature History

Esig Approval ID	User ID	Esig Date	Approval Level	Comments
2688381	RWALKER	05-FEB-14	SPM	SPM validation complete. Promote batch.
2680311	JSIMONSON	27-JAN-14	ITR	Promoted to SPM.
2679817	JSIMONSON	26-JAN-14	ITR	Demoted to Operations for rework.

AMWTP
Advanced Mixed Waste Treatment Project

AMWTP

RTR Analysis Report

Date: 11-Sep-2014
Time: 07:05

Batch Id RTR13-00324 **Container Id** 10357111 **Analysis Id** 0000094276

Container Type A drum, 55 Gallon Drum (17H) **Analysis Status** Pass

RTR Date 15-DEC-2013 09:03 **Gross Weight** 202.860 Lbs. **Net Weight** 141.860 Lbs.
Equipment Z-213-101 **Waste Matrix Code** S5490 **IDC** RF-760 RFP Debris
Recording Id 1RTR13-00176 **Procedure Id** INST-OI-12 **Revision** 52 **Approval Level** SPM
Is Test Pattern Resolution Ok? Yes **Start Side** A **Replicate** No **OIO** No
Audio Visual Ok? Yes **Operator** DGREEN

Result Comment Waste consists of sheetrock.
AK does not concur with the recommended IDC of UN-00B for container 10357111 because waste is debris retrieved from Pad 1, cells 1 and 2. Instead, AK recommends an IDC of RF-760. CHD 12/19/13
Rework to correct IDC per AK. ESO 12/23/13
AK concurs with the recommended IDC, RF-760, for container 10357111. No AKR or NCR is necessary. CHD 01/06/14

Package

IDC Correct Yes **Recommended IDC** RF-760 **Summary Category** S5000
Idc Change Reason Per AK
Rigid Liner Present? No **LinerType** NO LINER
Liner Punctured? N/A **Sharp Objects?** No
Liner Lid Present? No **Sharp Objects Are Protected?** Yes
Liner Lid Deformed? N/A **Layers Of Confinement** 3
Fill Factor 97
Bag Closure Method Twisted and Taped

Liquids

Liquid Present? No **Internal Container with Liquid** No
Internal Container with Liquid 0 pints **LA Candidate** No
Liquid Between Liner & Drum 0 pints **Containerized Liquid**
Total Liquid Amount 0 pints **Containerized Liquid Amt** 0 pints
Other Liquids 0 pints **Comment**
Prohibited Liquids Present No **Comment**

Contents-Drum or Box

	Value	Comment		Value	Comment
Lead?	No		Mercury Present?	No	
Wet Cell Batteries?	No		Explosives?	No	
Prohibited Compressed Gases?	No		PCBs Present?	No	
Aerosol Cans?	No		PCB Mass (lbs)	0	
Non-Mixed Hazardous Waste Present?	No		Sealed Containers Over 4L?	No	

Non-Radionuclide Pyrophoric Materials Present? No
Waste exhibiting the characteristics of Ignitability, Corrosivity or Reactivity Present? No
Wastes Incompatible with backfill, seal and panel closure materials, container and packaging materials,shipping container or other wastes? No
Impenetrable Dense Objects? No

Waste Material Items

Packaging Materials

Material Item	Quantity	Unit	Unit Wt(lbs)	Item Wt(lbs)
Drum plastic bag	2.000	EACH	1.000	2.000

Waste Items byWeight

Material Item	Quantity	Unit	Unit Wt(lbs)	Item Wt(lbs)
metal waste	1.000	EACH	3.000	3.000
wood	1.000	EACH	10.000	10.000
Cardboard liner	1.000	EACH	4.000	4.000
Plastic bag for waste	5.000	EACH	0.250	1.250

Batch Id RTR13-00324 **Container Id** 10357111 **Analysis Id** 0000094276

Waste Items by Volume

Material Item	Quantity	Unit	Unit Wt(lbs)	Item Wt(lbs)
Oil-Dri (Inside 55 gal drum)	8.000	PINTS	0.420	3.360

Waste Parameters

Waste Parameter	Remaining Weight %	Actual Weight Lbs
Iron-based Metals/Alloys	0.000	3.000
Aluminum-based Metals/Alloys	0.000	0.000
Other metals	0.000	0.000
Other Inorganic Materials	100.000	123.610
Cellulosics	0.000	14.000
Rubber	0.000	0.000
Plastic (Waste Materials)	0.000	1.250
Inorganic matrix	0.000	0.000
Organic matrix	0.000	0.000
Soils/gravel	0.000	0.000
Steel (packaging materials)	0.000	59.000
Plastic (packaging materials)	0.000	2.000
Cellulosics Packaging	0.000	0.000

Analysis Esignature History

Esig Approval Id	User Id	Esignature Date	Comment
2671704	CHINKLE	06-JAN-2014 07:43	Batch is promoted. chd 01/06/14
2670856	SOLDHAM	23-DEC-2013 09:23	
2670129	CHINKLE	19-DEC-2013 12:26	This batch is returned for rework. AK does not concur with the recommended IDC change for containers 10452573, 10447245, 10369045, 10368229, 10367220, 10366647, 10366375, 10357111, 10357099 and10352602. CHD 12/19/13
2668593	DGREEN	15-DEC-2013 09:03	

Batch Id RTR13-00324 **Container Id** 10359474 **Analysis Id** 0000094277

Container Type A drum, 55 Gallon Drum (17H) **Analysis Status** Pass

RTR Date 15-DEC-2013 10:14 **Gross Weight** 458.640 **Lbs.** **Net Weight** 397.640 **Lbs**

Equipment Z-213-101 **Waste Matrix Code** S3121 **IDC** RF-002 Second Stage Sludge

Recording Id 1RTR13-00176 **Procedure Id** INST-OI-12 **Revision** 52 **Approval Level** SPM

Is Test Pattern Resolution Ok? Yes **Start Side** A **Replicate** No **OIO** No

Audio Visual Ok? Yes **Operator** DGREEN

Result Comment Waste consists of sludge.

Package

IDC Correct Yes **Recommended IDC** **Summary Category** S3000

Idc Change Reason

Rigid Liner Present? No **LinerType** NO LINER

Liner Punctured? N/A **Sharp Objects?** No

Liner Lid Present? No **Sharp Objects Are Protected?** Yes

Liner Lid Deformed? N/A **Layers Of Confinement** 2

Fill Factor 80

Bag Closure Method Twisted and Taped

Liquids

Liquid Present? No **Internal Container with Liquid** No

Internal Container with Liquid 0 pints **LA Candidate** No

Liquid Between Liner & Drum 0 pints **Containerized Liquid**

Total Liquid Amount 0 pints **Containerized Liquid Amt** 0 pints

Other Liquids 0 pints **Comment**

Prohibited Liquids Present No **Comment**

Contents-Drum or Box

	Value	Comment		Value	Comment
Lead?	No		**Mercury Present?**	No	
Wet Cell Batteries?	No		**Explosives?**	No	
Prohibited Compressed Gases?	No		**PCBs Present?**	No	
Aerosol Cans?	No		**PCB Mass (lbs)**	0	
Non-Mixed Hazardous Waste Present?	No		**Sealed Containers Over 4L?**	No	

Non-Radionuclide Pyrophoric Materials Present? No

Waste exhibiting the characteristics of Ignitability, Corrosivity or Reactivity Present? No

Wastes Incompatible with backfill, seal and panel closure materials, container and packaging materials,shipping container or other wastes? No

Impenetrable Dense Objects? No

Waste Material Items

Packaging Materials

Material Item	Quantity	Unit	Unit Wt(lbs)	Item Wt(lbs)
Drum plastic bag	2.000	EACH	1.000	2.000

Waste Items byWeight

Material Item	Quantity	Unit	Unit Wt(lbs)	Item Wt(lbs)

Waste Items by Volume

Material Item	Quantity	Unit	Unit Wt(lbs)	Item Wt(lbs)
Vermiculite (95 gm/liter) .125 lb/pint	32.000	PINTS	0.125	4.000

Batch Id RTR13-00324 **Container Id** 10359474 **Analysis Id** 0000094277

Waste Parameters

Waste Parameter	Remaining Weight %	Actual Weight Lbs
Iron-based Metals/Alloys	0.000	0.000
Aluminum-based Metals/Alloys	0.000	0.000
Other metals	0.000	0.000
Other Inorganic Materials	0.000	4.000
Cellulosics	0.000	0.000
Rubber	0.000	0.000
Plastic (Waste Materials)	0.000	0.000
Inorganic matrix	100.000	393.640
Organic matrix	0.000	0.000
Soils/gravel	0.000	0.000
Steel (packaging materials)	0.000	59.000
Plastic (packaging materials)	0.000	2.000
Cellulosics Packaging	0.000	0.000

Analysis Esignature History

Esig Approval Id	User Id	Esignature Date	Comment
2668601	DGREEN	15-DEC-2013 10:14	

Batch Id RTR13-00324 **Container Id** 10368229 **Analysis Id** 0000094278

Container Type A drum, 55 Gallon Drum (17H) **Analysis Status** Pass

RTR Date 15-DEC-2013 11:00 **Gross Weight** 337.365 **Lbs.** **Net Weight** 276.365 **Lbs.**

Equipment Z-213-101 **Waste Matrix Code** S5490 **IDC** RF-760 RFP Debris

Recording Id 1RTR13-00176 **Procedure Id** INST-OI-12 **Revision** 52 **Approval Level** SPM

Is Test Pattern Resolution Ok? Yes **Start Side** A **Replicate** No **OIO** No

Audio Visual Ok? Yes **Operator** DGREEN

Result Comment Waste appears to consist of a few individual bags of sludge.
AK does not concur with the recommended IDC change from UN-000 to UN-00A for container 10368229 because RTR SME review indicates this waste is primarily debris. Instead, per RTR SME, AK recommends an IDC of RF-760. CHD 12/19/13
Rework to correct IDC per AK. ESO 12/23/13
AK concurs with the recommended IDC, RF-760, for container 10368229. No AKR or NCR is necessary. CHD 01/06/14
(rework) Disregard the Operator's description of the waste, waste appears to be primarily Other Inorganic Materials in the form of tiles and firebrick. Changed Remaining Contents of Container to Other Inorganic Materials, updated PCB fields and revised Impenetrable Dense Objects comment field. KH 26JAN14

Package

IDC Correct Yes **Recommended IDC** RF-760 **Summary Category** S5000

Idc Change Reason Per AK

Rigid Liner Present? No **LinerType** NO LINER

Liner Punctured? N/A **Sharp Objects?** No

Liner Lid Present? No **Sharp Objects Are Protected?** Yes

Liner Lid Deformed? N/A **Layers Of Confinement** 3

Fill Factor 70

Bag Closure Method Twisted and Taped

Liquids

Liquid Present? No **Internal Container with Liquid** No

Internal Container with Liquid 0 pints **LA Candidate** No

Liquid Between Liner & Drum 0 pints **Containerized Liquid**

Total Liquid Amount 0 pints **Containerized Liquid Amt** 0 pints

Other Liquids 0 pints **Comment**

Prohibited Liquids Present No **Comment**

Contents-Drum or Box

	Value	Comment		Value	Comment
Lead?	No		**Mercury Present?**	No	
Wet Cell Batteries?	No		**Explosives?**	No	
Prohibited Compressed Gases?	No		**PCBs Present?**	No	
Aerosol Cans?	No		**PCB Mass (lbs)**	0	
Non-Mixed Hazardous Waste Present?	No		**Sealed Containers Over 4L?**	No	

Non-Radionuclide Pyrophoric Materials Present? No

Waste exhibiting the characteristics of Ignitability, Corrosivity or Reactivity Present? No

Wastes Incompatible with backfill, seal and panel closure materials, container and packaging materials,shipping container or other wastes? No

Impenetrable Dense Objects? Yes - Unacceptable Individually bagged tiles and firebrick

Waste Material Items

Packaging Materials

Material Item	Quantity	Unit	Unit Wt(lbs)	Item Wt(lbs)
Drum plastic bag	2.000	EACH	1.000	2.000

Waste Items byWeight

Material Item	Quantity	Unit	Unit Wt(lbs)	Item Wt(lbs)
Cardboard liner	1.000	EACH	4.000	4.000
Plastic bag for waste	4.000	EACH	0.250	1.000

Batch Id RTR13-00324 **Container Id** 10368229 **Analysis Id** 0000094278

Waste Items by Volume

Material Item	Quantity	Unit	Unit Wt(lbs)	Item Wt(lbs)
Vermiculite (95 gm/liter) .125 lb/pint	120.000	PINTS	0.125	15.000

Waste Parameters

Waste Parameter	Remaining Weight %	Actual Weight Lbs
Iron-based Metals/Alloys	0.000	0.000
Aluminum-based Metals/Alloys	0.000	0.000
Other metals	0.000	0.000
Other Inorganic Materials	100.000	271.365
Cellulosics	0.000	4.000
Rubber	0.000	0.000
Plastic (Waste Materials)	0.000	1.000
Inorganic matrix	0.000	0.000
Organic matrix	0.000	0.000
Soils/gravel	0.000	0.000
Steel (packaging materials)	0.000	59.000
Plastic (packaging materials)	0.000	2.000
Cellulosics Packaging	0.000	0.000

Analysis Esignature History

Esig Approval Id	User Id	Esignature Date	Comment
2679874	KHUGHES	26-JAN-2014 14:32	
2671700	CHINKLE	06-JAN-2014 07:43	Batch is promoted. chd 01/06/14
2670859	SOLDHAM	23-DEC-2013 09:26	
2670122	CHINKLE	19-DEC-2013 12:26	This batch is returned for rework. AK does not concur with the recommended IDC change for containers 10452573, 10447245, 10369045, 10368229, 10367220, 10366647, 10366375, 10357111, 10357099 and10352602. CHD 12/19/13
2668613	DGREEN	15-DEC-2013 11:00	

Batch Id RTR13-00324 **Container Id** 10452573 **Analysis Id** 0000094279

Container Type A drum, 55 Gallon Drum (17H) **Analysis Status** Pass

RTR Date 15-DEC-2013 11:32 **Gross Weight** 337.365 **Lbs.** **Net Weight** 277.365 **Lbs.**

Equipment Z-213-101 **Waste Matrix Code** S3900 **IDC** UN-00A Undefined Homogeneous Solids

Recording Id 1RTR13-00176 **Procedure Id** INST-OI-12 **Revision** 52 **Approval Level** SPM

Is Test Pattern Resolution Ok? Yes **Start Side** A **Replicate** No **OIO** No

Audio Visual Ok? Yes **Operator** DGREEN

Result Comment Majority of the waste is impenetrable, but there appears to be a few metal cans in the 30 gal drum.
AK does not concur with the recommended IDC of UN-000 for container 10452573 because RTR SME review indicates that waste in cans cannot be identified. AK conservatively recommends an IDC of UN-00A. CHD 12/19/13
Rework to correct IDC per AK. ESO 12/23/13
AK concurs with the recommended IDC, UN-00A, for container 10452573. No AKR or NCR is necessary. CHD 01/06/14
(rework) Please disregard the Operator's description of the waste: waste has been conservatively assigned IDC UN-00A by AK and is described as Undefined Homogeneous Solids. Entered Yes, Acceptable, added comment and Mass into PCB fields. Changed Remaining Contents of Container to Organic Matrix. KH 26JAN14
AK concurs with the recommended IDC, UN-00A, for container 10452573. This container was returned to the AK Queue because of other rework. No further AK action is required. CHD 1/27/14

Package

IDC Correct Yes **Recommended IDC** UN-00A **Summary Category** S3000

Idc Change Reason Per AK

Rigid Liner Present? No **LinerType** NO LINER

Liner Punctured? N/A **Sharp Objects?** No

Liner Lid Present? No **Sharp Objects Are Protected?** Yes

Liner Lid Deformed? N/A **Layers Of Confinement** 2

Fill Factor 87

Bag Closure Method Twisted and Taped

Liquids

Liquid Present? No **Internal Container with Liquid** No

Internal Container with Liquid 0 pints **LA Candidate** No

Liquid Between Liner & Drum 0 pints **Containerized Liquid**

Containerized Liquid Amt 0 pints

Total Liquid Amount 0 pints

Other Liquids 0 pints **Comment**

Prohibited Liquids Present No **Comment**

Contents-Drum or Box

	Value	Comment		Value	Comment
Lead?	Yes, Rejected	30 gal lead liner	**Mercury Present?**	No	
Wet Cell Batteries?	No		**Explosives?**	No	
Prohibited Compressed Gases?	No		**PCBs Present?**	Yes - Acceptable	IDC UN-00A, with no liquids
Aerosol Cans?	No		**PCB Mass (lbs)**	277.37	
Non-Mixed Hazardous Waste Present?	No		**Sealed Containers Over 4L?**	Yes	30 gal drum.

Non-Radionuclide Pyrophoric Materials Present? No

Waste exhibiting the characteristics of Ignitability, Corrosivity or Reactivity Present? No

Wastes Incompatible with backfill, seal and panel closure materials, container and packaging materials,shipping container or other wastes? No

Impenetrable Dense Objects? Yes - Unacceptable The majority of the waste is impenetrable.

Waste Material Items

Packaging Materials

Material Item	Quantity	Unit	Unit Wt(lbs)	Item Wt(lbs)
Drum plastic bag	1.000	EACH	1.000	1.000

Waste Items byWeight

Material Item	Quantity	Unit	Unit Wt(lbs)	Item Wt(lbs)
30 gal lead liner	1.000	EACH	90.000	90.000
30 gal drum	1.000	EACH	30.000	30.000

Batch Id RTR13-00324 **Container Id** 10452573 **Analysis Id** 0000094279

Waste Items by Volume

Material Item	Quantity	Unit	Unit Wt(lbs)	Item Wt(lbs)
Oil-Dri (Inside 55 gal drum)	140.000	PINTS	0.420	58.800

Waste Parameters

Waste Parameter	Remaining Weight %	Actual Weight Lbs
Iron-based Metals/Alloys	0.000	30.000
Aluminum-based Metals/Alloys	0.000	0.000
Other metals	0.000	90.000
Other Inorganic Materials	0.000	58.800
Cellulosics	0.000	0.000
Rubber	0.000	0.000
Plastic (Waste Materials)	0.000	0.000
Inorganic matrix	0.000	0.000
Organic matrix	100.000	98.565
Soils/gravel	0.000	0.000
Steel (packaging materials)	0.000	59.000
Plastic (packaging materials)	0.000	1.000
Cellulosics Packaging	0.000	0.000

Analysis Esignature History

Esig Approval Id	User Id	Esignature Date	Comment
2680020	CHINKLE	27-JAN-2014 05:59	Batch is promoted. chd 1/27/14
2679881	KHUGHES	26-JAN-2014 14:39	
2671697	CHINKLE	06-JAN-2014 07:43	Batch is promoted. chd 01/06/14
2670863	SOLDHAM	23-DEC-2013 09:31	
2670119	CHINKLE	19-DEC-2013 12:26	This batch is returned for rework. AK does not concur with the recommended IDC change for containers 10452573, 10447245, 10369045, 10368229, 10367220, 10366647, 10366375, 10357111, 10357099 and10352602. CHD 12/19/13
2668616	DGREEN	15-DEC-2013 11:32	

Batch Id RTR13-00324 **Container Id** 10366647 **Analysis Id** 0000094280

Container Type A drum, 55 Gallon Drum (17H) **Analysis Status** Pass

RTR Date 15-DEC-2013 12:10 **Gross Weight** 207.270 **Lbs.** **Net Weight** 146.270 **Lbs.**

Equipment Z-213-101 **Waste Matrix Code** S5490 **IDC** RF-760 RFP Debris

Recording Id 1RTR13-00176 **Procedure Id** INST-OI-12 **Revision** 52 **Approval Level** SPM

Is Test Pattern Resolution Ok? Yes **Start Side** A **Replicate** No **OIO** No

Audio Visual Ok? Yes **Operator** DGREEN

Result Comment Waste consists of coveralls, paper, & rags.
AK does not concur with the recommended IDC of UN-00B for container 10366647 because waste is debris retrieved from Pad 1, cells 1 and 2. Instead, AK recommends an IDC of RF-760. CHD 12/19/13
Rework to correct IDC per AK. ESO 12/23/13
AK concurs with the recommended IDC, RF-760, for container 10366647. No AKR or NCR is necessary. CHD 01/06/14

Package

IDC Correct Yes **Recommended IDC** RF-760 **Summary Category** S5000

Idc Change Reason Per AK

Rigid Liner Present? No **LinerType** NO LINER

Liner Punctured? N/A **Sharp Objects?** No

Liner Lid Present? No **Sharp Objects Are Protected?** Yes

Liner Lid Deformed? N/A **Layers Of Confinement** 3

Fill Factor 99

Bag Closure Method Twisted and Taped

Liquids

Liquid Present? No **Internal Container with Liquid** No

Internal Container with Liquid 0 pints **LA Candidate** No

Liquid Between Liner & Drum 0 pints **Containerized Liquid**

Total Liquid Amount 0 pints **Containerized Liquid Amt** 0 pints

Other Liquids 0 pints **Comment**

Prohibited Liquids Present No **Comment**

Contents-Drum or Box

	Value	Comment		Value	Comment
Lead?	No		**Mercury Present?**	No	
Wet Cell Batteries?	No		**Explosives?**	No	
Prohibited Compressed Gases?	Yes	aerosol can no liquid inside	**PCBs Present?**	No	
Aerosol Cans?	Yes	aerosol can no liquid inside	**PCB Mass (lbs)**	0	
Non-Mixed Hazardous Waste Present?	No		**Sealed Containers Over 4L?**	No	

Non-Radionuclide Pyrophoric Materials Present? No

Waste exhibiting the characteristics of Ignitability, Corrosivity or Reactivity Present? No

Wastes Incompatible with backfill, seal and panel closure materials, container and packaging materials,shipping container or other wastes? No

Impenetrable Dense Objects? No

Waste Material Items

Packaging Materials

Material Item	Quantity	Unit	Unit Wt(lbs)	Item Wt(lbs)
Drum plastic bag	2.000	EACH	1.000	2.000

Batch Id RTR13-00324 **Container Id** 10366647 **Analysis Id** 0000094280

Waste Items byWeight

Material Item	Quantity	Unit	Unit Wt(lbs)	Item Wt(lbs)
aerosol can	1.000	EACH	0.500	0.500
d-cell batteries	1.000	EACH	1.500	1.500
plastic waste	1.000	EACH	6.000	6.000
metal waste	1.000	EACH	35.000	35.000
rubber waste	1.000	EACH	35.000	35.000
Fiber pack	1.000	EACH	6.000	6.000
Plastic bag for waste	1.000	EACH	0.250	0.250

Waste Items by Volume

Material Item	Quantity	Unit	Unit Wt(lbs)	Item Wt(lbs)
Oil-Dri (Inside 55 gal drum)	20.000	PINTS	0.420	8.400

Waste Parameters

Waste Parameter	Remaining Weight %	Actual Weight Lbs
Iron-based Metals/Alloys	0.000	35.500
Aluminum-based Metals/Alloys	0.000	0.000
Other metals	0.000	1.500
Other Inorganic Materials	0.000	8.400
Cellulosics	100.000	59.620
Rubber	0.000	35.000
Plastic (Waste Materials)	0.000	6.250
Inorganic matrix	0.000	0.000
Organic matrix	0.000	0.000
Soils/gravel	0.000	0.000
Steel (packaging materials)	0.000	59.000
Plastic (packaging materials)	0.000	2.000
Cellulosics Packaging	0.000	0.000

Analysis Esignature History

Esig Approval Id	User Id	Esignature Date	Comment
2671702	CHINKLE	06-JAN-2014 07:43	Batch is promoted. chd 01/06/14
2670858	SOLDHAM	23-DEC-2013 09:25	
2670124	CHINKLE	19-DEC-2013 12:26	This batch is returned for rework. AK does not concur with the recommended IDC change for containers 10452573, 10447245, 10369045, 10368229, 10367220, 10366647, 10366375, 10357111, 10357099 and10352602. CHD 12/19/13
2668626	DGREEN	15-DEC-2013 12:10	

Batch Id RTR13-00324 **Container Id** 10444894 **Analysis Id** 0000094281

Container Type A drum, 55 Gallon Drum (17H) **Analysis Status** Pass

RTR Date 15-DEC-2013 12:33 **Gross Weight** 381.465 **Lbs.** **Net Weight** 320.465 **Lbs**

Equipment Z-213-101 **Waste Matrix Code** S5490 **IDC** RF-760 RFP Debris

Recording Id 1RTR13-00176 **Procedure Id** INST-OI-12 **Revision** 52 **Approval Level** SPM

Is Test Pattern Resolution Ok? Yes **Start Side** A **Replicate** No **OIO** No

Audio Visual Ok? Yes **Operator** DGREEN

Result Comment Waste consists of metal - piping, fittings, valves, equipment, & several small spherical vessels.

Package

IDC Correct Yes **Recommended IDC** **Summary Category** S5000

Idc Change Reason

Rigid Liner Present? No **LinerType** NO LINER

Liner Punctured? N/A **Sharp Objects?** No

Liner Lid Present? No **Sharp Objects Are Protected?** Yes

Liner Lid Deformed? N/A **Layers Of Confinement** 3

Fill Factor 90

Bag Closure Method Twisted and Taped

Liquids

Liquid Present? No **Internal Container with Liquid** No

Internal Container with Liquid 0 pints **LA Candidate** No

Liquid Between Liner & Drum 0 pints **Containerized Liquid**

Total Liquid Amount 0 pints **Containerized Liquid Amt** 0 pints

Other Liquids 0 pints **Comment**

Prohibited Liquids Present No **Comment**

Contents-Drum or Box

	Value	Comment		Value	Comment
Lead?	No		**Mercury Present?**	No	
Wet Cell Batteries?	No		**Explosives?**	No	
Prohibited Compressed Gases?	Yes	small spherical pressure vessels 2-4" in diameter, some appear to be open, a few appear to be sealed.	**PCBs Present?**	No	
Aerosol Cans?	No		**PCB Mass (lbs)**	0	
Non-Mixed Hazardous Waste Present?	No		**Sealed Containers Over 4L?**	No	

Non-Radionuclide Pyrophoric Materials Present? No

Waste exhibiting the characteristics of Ignitability, Corrosivity or Reactivity Present? No

Wastes Incompatible with backfill, seal and panel closure materials, container and packaging materials,shipping container or other wastes? No

Impenetrable Dense Objects? Yes - Unacceptable areas 4-6" x 6-8" in size

Waste Material Items

Packaging Materials

Material Item	Quantity	Unit	Unit Wt(lbs)	Item Wt(lbs)
Drum plastic bag	2.000	EACH	1.000	2.000

Waste Items byWeight

Material Item	Quantity	Unit	Unit Wt(lbs)	Item Wt(lbs)
plastic waste	1.000	EACH	10.000	10.000
Cardboard liner	1.000	EACH	4.000	4.000
Plastic bag for waste	1.000	EACH	0.250	0.250

Waste Items by Volume

Material Item	Quantity	Unit	Unit Wt(lbs)	Item Wt(lbs)
Oil-Dri (Inside 55 gal drum)	8.000	PINTS	0.420	3.360

Batch Id RTR13-00324 **Container Id** 10444894 **Analysis Id** 0000094281

Waste Parameters

Waste Parameter	Remaining Weight %	Actual Weight Lbs
Iron-based Metals/Alloys	100.000	302.855
Aluminum-based Metals/Alloys	0.000	0.000
Other metals	0.000	0.000
Other Inorganic Materials	0.000	3.360
Cellulosics	0.000	4.000
Rubber	0.000	0.000
Plastic (Waste Materials)	0.000	10.250
Inorganic matrix	0.000	0.000
Organic matrix	0.000	0.000
Soils/gravel	0.000	0.000
Steel (packaging materials)	0.000	59.000
Plastic (packaging materials)	0.000	2.000
Cellulosics Packaging	0.000	0.000

Analysis Esignature History

Esig Approval Id	User Id	Esignature Date	Comment
2668641	DGREEN	15-DEC-2013 12:33	

Batch Id RTR13-00324 **Container Id** 10372116 **Analysis Id** 0000094282

Container Type A drum, 55 Gallon Drum (17H) **Analysis Status** Pass

RTR Date 15-DEC-2013 13:28 **Gross Weight** 165.375 **Lbs.** **Net Weight** 104.375 **Lbs.**

Equipment Z-213-101 **Waste Matrix Code** S5300 **IDC** RF-330 Paper and Rags-Dry

Recording Id 1RTR13-00176 **Procedure Id** INST-OI-12 **Revision** 52 **Approval Level** SPM

Is Test Pattern Resolution Ok? Yes **Start Side** A **Replicate** No **OIO** No

Audio Visual Ok? Yes **Operator** SPHILLIPS

Result Comment This drum contains cellulosics in the form of towels wipes and cardboad.

Package

IDC Correct Yes **Recommended IDC** **Summary Category** S5000

Idc Change Reason

Rigid Liner Present? No **LinerType** NO LINER

Liner Punctured? N/A **Sharp Objects?** No

Liner Lid Present? No **Sharp Objects Are Protected?** Yes

Liner Lid Deformed? N/A **Layers Of Confinement** 3

Fill Factor 90

Bag Closure Method Twisted and Taped

Liquids

Liquid Present? No **Internal Container with Liquid** No

Internal Container with Liquid 0 pints **LA Candidate** No

Liquid Between Liner & Drum 0 pints **Containerized Liquid**

Total Liquid Amount 0 pints **Containerized Liquid Amt** 0 pints

Other Liquids 0 pints **Comment**

Prohibited Liquids Present No **Comment**

Contents-Drum or Box

	Value	Comment		Value	Comment
Lead?	No		**Mercury Present?**	No	
Wet Cell Batteries?	No		**Explosives?**	No	
Prohibited Compressed Gases?	No		**PCBs Present?**	No	
Aerosol Cans?	No		**PCB Mass (lbs)**	0	
Non-Mixed Hazardous Waste Present?	No		**Sealed Containers Over 4L?**	No	

Non-Radionuclide Pyrophoric Materials Present? No

Waste exhibiting the characteristics of Ignitability, Corrosivity or Reactivity Present? No

Wastes Incompatible with backfill, seal and panel closure materials, container and packaging materials,shipping container or other wastes? No

Impenetrable Dense Objects? No

Waste Material Items

Packaging Materials

Material Item	Quantity	Unit	Unit Wt(lbs)	Item Wt(lbs)
Drum plastic bag	2.000	EACH	1.000	2.000

Waste Items byWeight

Material Item	Quantity	Unit	Unit Wt(lbs)	Item Wt(lbs)
plastic waste	1.000	EACH	10.000	10.000
metal debris	2.000	EACH	5.000	10.000
Cardboard liner	1.000	EACH	4.000	4.000
Plastic bag for waste	1.000	EACH	0.250	0.250

Waste Items by Volume

Material Item	Quantity	Unit	Unit Wt(lbs)	Item Wt(lbs)
Vermiculite (95 gm/liter) .125 lb/pint	10.000	PINTS	0.125	1.250
Oil-Dri (Inside 55 gal drum)	30.000	PINTS	0.420	12.600

Batch Id RTR13-00324 **Container Id** 10372116 **Analysis Id** 0000094282

Waste Parameters

Waste Parameter	Remaining Weight %	Actual Weight Lbs
Iron-based Metals/Alloys	0.000	10.000
Aluminum-based Metals/Alloys	0.000	0.000
Other metals	0.000	0.000
Other Inorganic Materials	0.000	13.850
Cellulosics	100.000	70.275
Rubber	0.000	0.000
Plastic (Waste Materials)	0.000	10.250
Inorganic matrix	0.000	0.000
Organic matrix	0.000	0.000
Soils/gravel	0.000	0.000
Steel (packaging materials)	0.000	59.000
Plastic (packaging materials)	0.000	2.000
Cellulosics Packaging	0.000	0.000

Analysis Esignature History

Esig Approval Id	User Id	Esignature Date	Comment
2668664	SPHILLIPS	15-DEC-2013 13:28	

Batch Id RTR13-00324 **Container Id** 10357099 **Analysis Id** 0000094283

Container Type A drum, 55 Gallon Drum (17H) **Analysis Status** Pass

RTR Date 15-DEC-2013 13:56 **Gross Weight** 502.740 **Lbs.** **Net Weight** 441.740 **Lbs.**

Equipment Z-213-101 **Waste Matrix Code** S5490 **IDC** RF-760 RFP Debris

Recording Id 1RTR13-00176 **Procedure Id** INST-OI-12 **Revision** 52 **Approval Level** SPM

Is Test Pattern Resolution Ok? Yes **Start Side** A **Replicate** No **OIO** No

Audio Visual Ok? Yes **Operator** SPHILLIPS

Result Comment This drum contains Metal debris in the form of piping and scrap metal.
AK does not concur with the recommended IDC of UN-00B for container 10357099 because waste is debris retrieved from Pad 1, cells 1 and 2. Instead, AK recommends an IDC of RF-760. CHD 12/19/13
Rework to correct IDC per AK. ESO 12/23/13
AK concurs with the recommended IDC, RF-760, for container 10357099. No AKR or NCR is necessary. CHD 01/06/14

Package

IDC Correct Yes **Recommended IDC** RF-760 **Summary Category** S5000

Idc Change Reason Per AK

Rigid Liner Present? No **LinerType** NO LINER

Liner Punctured? N/A **Sharp Objects?** No

Liner Lid Present? No **Sharp Objects Are Protected?** Yes

Liner Lid Deformed? N/A **Layers Of Confinement** 3

Fill Factor 90

Bag Closure Method Twisted and Taped

Liquids

Liquid Present? No **Internal Container with Liquid** No

Internal Container with Liquid 0 pints **LA Candidate** No

Liquid Between Liner & Drum 0 pints **Containerized Liquid**

Total Liquid Amount 0 pints **Containerized Liquid Amt** 0 pints

Other Liquids 0 pints **Comment**

Prohibited Liquids Present No **Comment**

Contents-Drum or Box

	Value	Comment		Value	Comment
Lead?	Yes, Acceptable	lead solder	**Mercury Present?**	No	
Wet Cell Batteries?	No		**Explosives?**	No	
Prohibited Compressed Gases?	No		**PCBs Present?**	No	
Aerosol Cans?	No		**PCB Mass (lbs)**	0	
Non-Mixed Hazardous Waste Present?	No		**Sealed Containers Over 4L?**	No	

Non-Radionuclide Pyrophoric Materials Present? No

Waste exhibiting the characteristics of Ignitability, Corrosivity or Reactivity Present? No

Wastes Incompatible with backfill, seal and panel closure materials, container and packaging materials,shipping container or other wastes? No

Impenetrable Dense Objects? Yes - Unacceptable unable to penatrate 80% of the waste

Waste Material Items

Packaging Materials

Material Item	Quantity	Unit	Unit Wt(lbs)	Item Wt(lbs)
Drum plastic bag	2.000	EACH	1.000	2.000

Waste Items byWeight

Material Item	Quantity	Unit	Unit Wt(lbs)	Item Wt(lbs)
lead solder	1.000	EACH	0.010	0.010
batteries	1.000	EACH	8.000	8.000
Cardboard liner	1.000	EACH	4.000	4.000
Plastic bag for waste	1.000	EACH	0.250	0.250

Batch Id RTR13-00324 **Container Id** 10357099 **Analysis Id** 0000094283

Waste Items by Volume

Material Item	Quantity	Unit	Unit Wt(lbs)	Item Wt(lbs)

Waste Parameters

Waste Parameter	Remaining Weight %	Actual Weight Lbs
Iron-based Metals/Alloys	100.000	429.480
Aluminum-based Metals/Alloys	0.000	0.000
Other metals	0.000	8.010
Other Inorganic Materials	0.000	0.000
Cellulosics	0.000	4.000
Rubber	0.000	0.000
Plastic (Waste Materials)	0.000	0.250
Inorganic matrix	0.000	0.000
Organic matrix	0.000	0.000
Soils/gravel	0.000	0.000
Steel (packaging materials)	0.000	59.000
Plastic (packaging materials)	0.000	2.000
Cellulosics Packaging	0.000	0.000

Analysis Esignature History

Esig Approval Id	User Id	Esignature Date	Comment
2671705	CHINKLE	06-JAN-2014 07:43	Batch is promoted. chd 01/06/14
2670855	SOLDHAM	23-DEC-2013 09:22	
2670130	CHINKLE	19-DEC-2013 12:26	This batch is returned for rework. AK does not concur with the recommended IDC change for containers 10452573, 10447245, 10369045, 10368229, 10367220, 10366647, 10366375, 10357111, 10357099 and10352602. CHD 12/19/13
2668666	SPHILLIPS	15-DEC-2013 13:56	

Batch Id RTR13-00324 **Container Id** 10367220 **Analysis Id** 0000094284

Container Type A drum, 55 Gallon Drum (17H) **Analysis Status** Pass

RTR Date 15-DEC-2013 15:05 **Gross Weight** 370.440 **Lbs.** **Net Weight** 309.440 **Lbs.**

Equipment Z-213-101 **Waste Matrix Code** S5490 **IDC** RF-760 RFP Debris

Recording Id 1RTR13-00176 **Procedure Id** INST-OI-12 **Revision** 52 **Approval Level** SPM

Is Test Pattern Resolution Ok? Yes **Start Side** A **Replicate** No **OIO** No

Audio Visual Ok? Yes **Operator** SPHILLIPS

Result Comment This Drum contains metal debris in the form of piping, sheet metal and elect. parts.
AK does not concur with the recommended IDC change from UN-000 to UN-00B for container 10367220 because waste is debris retrieved from Pad 1, cells 1 and 2. Instead, AK recommends an IDC of RF-760. CHD 12/19/13
Rework to correct IDC per AK. ESO 12/23/13
AK concurs with the recommended IDC, RF-760, for container 10367220. No AKR or NCR is necessary. CHD 01/06/14

Package

IDC Correct Yes **Recommended IDC** RF-760 **Summary Category** S5000

Idc Change Reason Per AK

Rigid Liner Present? No **LinerType** NO LINER

Liner Punctured? N/A **Sharp Objects?** No

Liner Lid Present? No **Sharp Objects Are Protected?** Yes

Liner Lid Deformed? N/A **Layers Of Confinement** 2

Fill Factor 80

Bag Closure Method Twisted and Taped

Liquids

Liquid Present? No **Internal Container with Liquid** No

Internal Container with Liquid 0 pints **LA Candidate** No

Liquid Between Liner & Drum 0 pints **Containerized Liquid**

Total Liquid Amount 0 pints **Containerized Liquid Amt** 0 pints

Other Liquids 0 pints **Comment**

Prohibited Liquids Present No **Comment**

Contents-Drum or Box

	Value	Comment		Value	Comment
Lead?	Yes, Acceptable	Solder	**Mercury Present?**	No	
Wet Cell Batteries?	No		**Explosives?**	No	
Prohibited Compressed Gases?	No		**PCBs Present?**	No	
Aerosol Cans?	No		**PCB Mass (lbs)**	0	
Non-Mixed Hazardous Waste Present?	No		**Sealed Containers Over 4L?**	No	

Non-Radionuclide Pyrophoric Materials Present? No

Waste exhibiting the characteristics of Ignitability, Corrosivity or Reactivity Present? No

Wastes Incompatible with backfill, seal and panel closure materials, container and packaging materials,shipping container or other wastes? No

Impenetrable Dense Objects? Yes - Unacceptable Unable to penatrate 40% of the waste

Waste Material Items

Packaging Materials

Material Item	Quantity	Unit	Unit Wt(lbs)	Item Wt(lbs)
Drum plastic bag	2.000	EACH	1.000	2.000

Waste Items byWeight

Material Item	Quantity	Unit	Unit Wt(lbs)	Item Wt(lbs)
solder	1.000	EACH	0.010	0.010
plastic waste	1.000	EACH	5.000	5.000
Cardboard liner	1.000	EACH	4.000	4.000

Batch Id RTR13-00324 **Container Id** 10367220 **Analysis Id** 0000094284

Waste Items by Volume

Material Item	Quantity	Unit	Unit Wt(lbs)	Item Wt(lbs)
Vermiculite (95 gm/liter) .125 lb/pint	12.000	PINTS	0.125	1.500

Waste Parameters

Waste Parameter	Remaining Weight %	Actual Weight Lbs
Iron-based Metals/Alloys	100.000	298.930
Aluminum-based Metals/Alloys	0.000	0.000
Other metals	0.000	0.010
Other Inorganic Materials	0.000	1.500
Cellulosics	0.000	4.000
Rubber	0.000	0.000
Plastic (Waste Materials)	0.000	5.000
Inorganic matrix	0.000	0.000
Organic matrix	0.000	0.000
Soils/gravel	0.000	0.000
Steel (packaging materials)	0.000	59.000
Plastic (packaging materials)	0.000	2.000
Cellulosics Packaging	0.000	0.000

Analysis Esignature History

Esig Approval Id	User Id	Esignature Date	Comment
2671701	CHINKLE	06-JAN-2014 07:43	Batch is promoted. chd 01/06/14
2670864	SOLDHAM	23-DEC-2013 09:32	
2670123	CHINKLE	19-DEC-2013 12:26	This batch is returned for rework. AK does not concur with the recommended IDC change for containers 10452573, 10447245, 10369045, 10368229, 10367220, 10366647, 10366375, 10357111, 10357099 and10352602. CHD 12/19/13
2668687	SPHILLIPS	15-DEC-2013 15:05	

Batch Id RTR13-00324 **Container Id** 10369045 **Analysis Id** 0000094285

Container Type A drum, 55 Gallon Drum (17H) **Analysis Status** Pass

RTR Date 15-DEC-2013 16:21 **Gross Weight** 372.645 **Lbs.** **Net Weight** 311.645 **Lbs.**

Equipment Z-213-101 **Waste Matrix Code** S5490 **IDC** RF-760 RFP Debris

Recording Id 1RTR13-00176 **Procedure Id** INST-OI-12 **Revision** 52 **Approval Level** SPM

Is Test Pattern Resolution Ok? Yes **Start Side** A **Replicate** No **OIO** No

Audio Visual Ok? Yes **Operator** SPHILLIPS

Result Comment This drum contains concrete in the form of chunks.
AK does not concur with the recommended IDC change from UN-000 to UN-00B for container 10369045 because waste is debris retrieved from Pad 1, cells 1 and 2. Instead, AK recommends an IDC of RF-760. CHD 12/19/13
Rework to correct IDC per AK. ESO 12/23/13
AK concurs with the recommended IDC, RF-760, for container 10369045. No AKR or NCR is necessary. CHD 01/06/14

Package

IDC Correct Yes **Recommended IDC** RF-760 **Summary Category** S5000

Idc Change Reason Per AK

Rigid Liner Present? No **LinerType** NO LINER

Liner Punctured? N/A **Sharp Objects?** No

Liner Lid Present? No **Sharp Objects Are Protected?** Yes

Liner Lid Deformed? N/A **Layers Of Confinement** 3

Fill Factor 85

Bag Closure Method Twisted and Taped

Liquids

Liquid Present? No **Internal Container with Liquid** No

Internal Container with Liquid 0 pints **LA Candidate** No

Liquid Between Liner & Drum 0 pints **Containerized Liquid**

Total Liquid Amount 0 pints **Containerized Liquid Amt** 0 pints

Other Liquids 0 pints **Comment**

Prohibited Liquids Present No **Comment**

Contents-Drum or Box

	Value	Comment		Value	Comment
Lead?	No		**Mercury Present?**	No	
Wet Cell Batteries?	No		**Explosives?**	No	
Prohibited Compressed Gases?	No		**PCBs Present?**	No	
Aerosol Cans?	No		**PCB Mass (lbs)**	0	
Non-Mixed Hazardous Waste Present?	No		**Sealed Containers Over 4L?**	No	

Non-Radionuclide Pyrophoric Materials Present? No

Waste exhibiting the characteristics of Ignitability, Corrosivity or Reactivity Present? No

Wastes Incompatible with backfill, seal and panel closure materials, container and packaging materials,shipping container or other wastes? No

Impenetrable Dense Objects? Yes - Unacceptable unable to verify that a poly bottle in the waste is empty. bottle is located at center chime.

Waste Material Items

Packaging Materials

Material Item	Quantity	Unit	Unit Wt(lbs)	Item Wt(lbs)
Drum plastic bag	2.000	EACH	1.000	2.000

Waste Items byWeight

Material Item	Quantity	Unit	Unit Wt(lbs)	Item Wt(lbs)
poly bottle	1.000	EACH	0.500	0.500
Cardboard liner	1.000	EACH	4.000	4.000
Plastic bag for waste	1.000	EACH	0.250	0.250

Batch Id RTR13-00324 **Container Id** 10369045 **Analysis Id** 0000094285

Waste Items by Volume

Material Item	Quantity	Unit	Unit Wt(lbs)	Item Wt(lbs)
Vermiculite (95 gm/liter) .125 lb/pint	8.000	PINTS	0.125	1.000

Waste Parameters

Waste Parameter	Remaining Weight %	Actual Weight Lbs
Iron-based Metals/Alloys	0.000	0.000
Aluminum-based Metals/Alloys	0.000	0.000
Other metals	0.000	0.000
Other Inorganic Materials	100.000	306.895
Cellulosics	0.000	4.000
Rubber	0.000	0.000
Plastic (Waste Materials)	0.000	0.750
Inorganic matrix	0.000	0.000
Organic matrix	0.000	0.000
Soils/gravel	0.000	0.000
Steel (packaging materials)	0.000	59.000
Plastic (packaging materials)	0.000	2.000
Cellulosics Packaging	0.000	0.000

Analysis Esignature History

Esig Approval Id	User Id	Esignature Date	Comment
2671699	CHINKLE	06-JAN-2014 07:43	Batch is promoted. chd 01/06/14
2670860	SOLDHAM	23-DEC-2013 09:27	
2670121	CHINKLE	19-DEC-2013 12:26	This batch is returned for rework. AK does not concur with the recommended IDC change for containers 10452573, 10447245, 10369045, 10368229, 10367220, 10366647, 10366375, 10357111, 10357099 and10352602. CHD 12/19/13
2668709	SPHILLIPS	15-DEC-2013 16:21	

Batch Id RTR13-00324 **Container Id** 10366375 **Analysis Id** 0000094286

Container Type A drum, 55 Gallon Drum (17H) **Analysis Status** Pass

RTR Date 15-DEC-2013 16:35 **Gross Weight** 169.785 **Lbs.** **Net Weight** 108.785 **Lbs.**

Equipment Z-213-101 **Waste Matrix Code** S5490 **IDC** RF-760 RFP Debris

Recording Id 1RTR13-00176 **Procedure Id** INST-OI-12 **Revision** 52 **Approval Level** SPM

Is Test Pattern Resolution Ok? Yes **Start Side** A **Replicate** No **OIO** No

Audio Visual Ok? Yes **Operator** SPHILLIPS

Result Comment This drum contains Cellulosics in the form of towels, wipes and ppe.
AK does not concur with the recommended IDC of UN-00B for container 10366375 because waste is debris retrieved from Pad 1, cells 1 and 2. Instead, AK recommends an IDC of RF-760. CHD 12/19/13
Rework to correct IDC per AK. ESO 12/23/13
AK concurs with the recommended IDC, RF-760, for container 10366375. No AKR or NCR is necessary. CHD 01/06/14

Package

IDC Correct Yes **Recommended IDC** RF-760 **Summary Category** S5000

Idc Change Reason Per AK

Rigid Liner Present? No **LinerType** NO LINER

Liner Punctured? N/A **Sharp Objects?** No

Liner Lid Present? No **Sharp Objects Are Protected?** Yes

Liner Lid Deformed? N/A **Layers Of Confinement** 3

Fill Factor 90

Bag Closure Method Twisted and Taped

Liquids

Liquid Present? No **Internal Container with Liquid** No

Internal Container with Liquid 0 pints **LA Candidate** No

Liquid Between Liner & Drum 0 pints **Containerized Liquid**

Containerized Liquid Amt 0 pints

Total Liquid Amount 0 pints

Other Liquids 0 pints **Comment**

Prohibited Liquids Present No **Comment**

Contents-Drum or Box

	Value	Comment		Value	Comment
Lead?	No		Mercury Present?	No	
Wet Cell Batteries?	No		Explosives?	No	
Prohibited Compressed Gases?	No		PCBs Present?	No	
Aerosol Cans?	No		PCB Mass (lbs)	0	
Non-Mixed Hazardous Waste Present?	No		Sealed Containers Over 4L?	No	

Non-Radionuclide Pyrophoric Materials Present? No

Waste exhibiting the characteristics of Ignitability, Corrosivity or Reactivity Present? No

Wastes Incompatible with backfill, seal and panel closure materials, container and packaging materials,shipping container or other wastes? No

Impenetrable Dense Objects? No

Waste Material Items

Packaging Materials

Material Item	Quantity	Unit	Unit Wt(lbs)	Item Wt(lbs)
Drum plastic bag	2.000	EACH	1.000	2.000

Waste Items byWeight

Material Item	Quantity	Unit	Unit Wt(lbs)	Item Wt(lbs)
plastic waste	1.000	EACH	10.000	10.000
metal debris	1.000	EACH	6.000	6.000
Cardboard liner	1.000	EACH	4.000	4.000
Plastic bag for waste	1.000	EACH	0.250	0.250

Batch Id RTR13-00324 **Container Id** 10366375 **Analysis Id** 0000094286

Waste Items by Volume

Material Item	Quantity	Unit	Unit Wt(lbs)	Item Wt(lbs)
Vermiculite (95 gm/liter) .125 lb/pint	8.000	PINTS	0.125	1.000

Waste Parameters

Waste Parameter	Remaining Weight %	Actual Weight Lbs
Iron-based Metals/Alloys	0.000	6.000
Aluminum-based Metals/Alloys	0.000	0.000
Other metals	0.000	0.000
Other Inorganic Materials	0.000	1.000
Cellulosics	100.000	91.535
Rubber	0.000	0.000
Plastic (Waste Materials)	0.000	10.250
Inorganic matrix	0.000	0.000
Organic matrix	0.000	0.000
Soils/gravel	0.000	0.000
Steel (packaging materials)	0.000	59.000
Plastic (packaging materials)	0.000	2.000
Cellulosics Packaging	0.000	0.000

Analysis Esignature History

Esig Approval Id	User Id	Esignature Date	Comment
2671703	CHINKLE	06-JAN-2014 07:43	Batch is promoted. chd 01/06/14
2670857	SOLDHAM	23-DEC-2013 09:24	
2670125	CHINKLE	19-DEC-2013 12:26	This batch is returned for rework. AK does not concur with the recommended IDC change for containers 10452573, 10447245, 10369045, 10368229, 10367220, 10366647, 10366375, 10357111, 10357099 and10352602. CHD 12/19/13
2668738	SPHILLIPS	15-DEC-2013 16:35	

Batch Id RTR13-00324 **Container Id** 10352602 **Analysis Id** 0000094287

Container Type A drum, 55 Gallon Drum (17H) **Analysis Status** Pass

RTR Date 15-DEC-2013 17:40 **Gross Weight** 218.295 Lbs. **Net Weight** 158.295 Lbs.

Equipment Z-213-101 **Waste Matrix Code** S5490 **IDC** RF-760 RFP Debris

Recording Id 1RTR13-00176 **Procedure Id** INST-OI-12 **Revision** 52 **Approval Level** SPM

Is Test Pattern Resolution Ok? Yes **Start Side** A **Replicate** No **OIO** No

Audio Visual Ok? Yes **Operator** SPHILLIPS

Result Comment This drum contains metal debris in the form of 5 gallon buckets.
Operator stated 1 layer of confinment there is 2.
AK does not concur with the recommended IDC of UN-00B for container 10352602 because waste is debris retrieved from Pad 1, cells 1 and 2. Instead, AK recommends an IDC of RF-760. CHD 12/19/13
Rework to correct IDC per AK. ESO 12/23/13
AK concurs with the recommended IDC, RF-760, for container 10352602. No AKR or NCR is necessary. CHD 01/06/14

Package

IDC Correct Yes **Recommended IDC** RF-760 **Summary Category** S5000

Idc Change Reason Per AK

Rigid Liner Present? No **LinerType** NO LINER

Liner Punctured? N/A **Sharp Objects?** No

Liner Lid Present? No **Sharp Objects Are Protected?** Yes

Liner Lid Deformed? N/A **Layers Of Confinement** 2

Fill Factor 90

Bag Closure Method Twisted and Taped

Liquids

Liquid Present? No **Internal Container with Liquid** No

Internal Container with Liquid 0 pints **LA Candidate** No

Liquid Between Liner & Drum 0 pints **Containerized Liquid**

Total Liquid Amount 0 pints **Containerized Liquid Amt** 0 pints

Other Liquids 0 pints **Comment**

Prohibited Liquids Present No **Comment**

Contents-Drum or Box

	Value	Comment		Value	Comment
Lead?	No		**Mercury Present?**	No	
Wet Cell Batteries?	No		**Explosives?**	No	
Prohibited Compressed Gases?	No		**PCBs Present?**	No	
Aerosol Cans?	No		**PCB Mass (lbs)**	0	
Non-Mixed Hazardous Waste Present?	No		**Sealed Containers Over 4L?**	Yes	5 gallon buckets

Non-Radionuclide Pyrophoric Materials Present? No

Waste exhibiting the characteristics of Ignitability, Corrosivity or Reactivity Present? No

Wastes Incompatible with backfill, seal and panel closure materials, container and packaging materials,shipping container or other wastes? No

Impenetrable Dense Objects? No

Waste Material Items

Packaging Materials

Material Item	Quantity	Unit	Unit Wt(lbs)	Item Wt(lbs)
Drum plastic bag	1.000	EACH	1.000	1.000

Waste Items byWeight

Material Item	Quantity	Unit	Unit Wt(lbs)	Item Wt(lbs)
5 gallon bucket	1.000	EACH	5.000	5.000
plastic waste	1.000	EACH	10.000	10.000
paper and rags	1.000	EACH	7.000	7.000
Cardboard liner	1.000	EACH	4.000	4.000

Batch Id RTR13-00324 **Container Id** 10352602 **Analysis Id** 0000094287

Waste Items by Volume

Material Item	Quantity	Unit	Unit Wt(lbs)	Item Wt(lbs)
Oil-Dri (Inside 55 gal drum)	25.000	PINTS	0.420	10.500

Waste Parameters

Waste Parameter	Remaining Weight %	Actual Weight Lbs
Iron-based Metals/Alloys	100.000	126.795
Aluminum-based Metals/Alloys	0.000	0.000
Other metals	0.000	0.000
Other Inorganic Materials	0.000	10.500
Cellulosics	0.000	11.000
Rubber	0.000	0.000
Plastic (Waste Materials)	0.000	10.000
Inorganic matrix	0.000	0.000
Organic matrix	0.000	0.000
Soils/gravel	0.000	0.000
Steel (packaging materials)	0.000	59.000
Plastic (packaging materials)	0.000	1.000
Cellulosics Packaging	0.000	0.000

Analysis Esignature History

Esig Approval Id	User Id	Esignature Date	Comment
2671706	CHINKLE	06-JAN-2014 07:43	Batch is promoted. chd 01/06/14
2670854	SOLDHAM	23-DEC-2013 09:21	
2670131	CHINKLE	19-DEC-2013 12:26	This batch is returned for rework. AK does not concur with the recommended IDC change for containers 10452573, 10447245, 10369045, 10368229, 10367220, 10366647, 10366375, 10357111, 10357099 and10352602. CHD 12/19/13
2668761	SPHILLIPS	15-DEC-2013 17:40	

Batch Id RTR13-00324 **Container Id** 10357264 **Analysis Id** 0000094289

Container Type A drum, 55 Gallon Drum (17H) **Analysis Status** Pass

RTR Date 16-DEC-2013 11:15 **Gross Weight** 198.450 **Lbs.** **Net Weight** 138.450 **Lbs.**

Equipment Z-213-101 **Waste Matrix Code** S5490 **IDC** RF-760 RFP Debris

Recording Id 1RTR13-00176 **Procedure Id** INST-OI-12 **Revision** 52 **Approval Level** SPM

Is Test Pattern Resolution Ok? Yes **Start Side** A **Replicate** No **OIO** No

Audio Visual Ok? Yes **Operator** MRICKS

Result Comment Primary waste appears to be plastic sheeting bags and bottles.
AK concurs with the recommended IDC, RF-760, for container 10357264. No AKR or NCR is necessary. CHD 12/19/13
(rework) Updated respirator filters waste parameters. KH 26JAN14

Package

IDC Correct Yes **Recommended IDC** RF-760 **Summary Category** S5000

Idc Change Reason debris

Rigid Liner Present? No **LinerType** NO LINER

Liner Punctured? N/A **Sharp Objects?** No

Liner Lid Present? No **Sharp Objects Are Protected?** Yes

Liner Lid Deformed? N/A **Layers Of Confinement** 2

Fill Factor 96

Bag Closure Method Twisted and Taped

Liquids

Liquid Present? Yes **Internal Container with Liquid** No

Internal Container with Liquid 0 pints **LA Candidate** No

Liquid Between Liner & Drum 0 pints **Containerized Liquid**

Total Liquid Amount .1 pints **Containerized Liquid Amt** 0 pints

Other Liquids .1 pints **Comment** .1 pint in bagging

Prohibited Liquids Present No **Comment**

Contents-Drum or Box

	Value	Comment		Value	Comment
Lead?	Yes, Acceptable	tape	**Mercury Present?**	No	
Wet Cell Batteries?	No		**Explosives?**	No	
Prohibited Compressed Gases?	No		**PCBs Present?**	No	
Aerosol Cans?	No		**PCB Mass (lbs)**	0	
Non-Mixed Hazardous Waste Present?	No		**Sealed Containers Over 4L?**	No	

Non-Radionuclide Pyrophoric Materials Present? No

Waste exhibiting the characteristics of Ignitability, Corrosivity or Reactivity Present? No

Wastes Incompatible with backfill, seal and panel closure materials, container and packaging materials,shipping container or other wastes? No

Impenetrable Dense Objects? No

Waste Material Items

Packaging Materials

Material Item	Quantity	Unit	Unit Wt(lbs)	Item Wt(lbs)
Drum plastic bag	1.000	EACH	1.000	1.000

Waste Items byWeight

Material Item	Quantity	Unit	Unit Wt(lbs)	Item Wt(lbs)
respirator filters	1.000	EACH	2.000	2.000
filter mask	1.000	EACH	1.000	1.000
paper	1.000	EACH	2.000	2.000
misc metal	2.000	EACH	6.000	12.000
lead tape	1.000	EACH	1.000	1.000
concrete	3.000	EACH	5.000	15.000
Fiber pack	1.000	EACH	6.000	6.000
Plastic bag for waste	1.000	EACH	0.250	0.250

Batch Id RTR13-00324 **Container Id** 10357264 **Analysis Id** 0000094289

Waste Items by Volume

Material Item	Quantity	Unit	Unit Wt(lbs)	Item Wt(lbs)
Oil-Dri (Inside 55 gal drum)	24.000	PINTS	0.420	10.080
Liquids for Other Inorganics	0.100	PINTS	1.000	0.100

Waste Parameters

Waste Parameter	Remaining Weight %	Actual Weight Lbs
Iron-based Metals/Alloys	0.000	12.000
Aluminum-based Metals/Alloys	0.000	1.400
Other metals	0.000	1.000
Other Inorganic Materials	0.000	25.180
Cellulosics	0.000	8.600
Rubber	0.000	1.000
Plastic (Waste Materials)	100.000	89.270
Inorganic matrix	0.000	0.000
Organic matrix	0.000	0.000
Soils/gravel	0.000	0.000
Steel (packaging materials)	0.000	59.000
Plastic (packaging materials)	0.000	1.000
Cellulosics Packaging	0.000	0.000

Analysis Esignature History

Esig Approval Id	User Id	Esignature Date	Comment
2679884	KHUGHES	26-JAN-2014 14:43	
2670128	CHINKLE	19-DEC-2013 12:26	This batch is returned for rework. AK does not concur with the recommended IDC change for containers 10452573, 10447245, 10369045, 10368229, 10367220, 10366647, 10366375, 10357111, 10357099 and10352602. CHD 12/19/13
2668890	MRICKS	16-DEC-2013 11:15	

Batch Id RTR13-00324 **Container Id** 10359822 **Analysis Id** 0000094290

Container Type A drum, 55 Gallon Drum (17H) **Analysis Status** Pass

RTR Date 16-DEC-2013 11:31 **Gross Weight** 143.325 **Lbs.** **Net Weight** 82.325 **Lbs**

Equipment Z-213-101 **Waste Matrix Code** S5490 **IDC** RF-760 RFP Debris

Recording Id 1RTR13-00176 **Procedure Id** INST-OI-12 **Revision** 52 **Approval Level** SPM

Is Test Pattern Resolution Ok? Yes **Start Side** A **Replicate** No **OIO** No

Audio Visual Ok? Yes **Operator** MRICKS

Result Comment Primary waste appears to be plastic sheeting and bags.
AK concurs with the recommended IDC, RF-760, for container 10359822. No AKR or NCR is necessary. CHD 12/19/13
(rework) Updated Waste Parameters for respirator filters. KH 26JAN14

Package

IDC Correct Yes **Recommended IDC** RF-760 **Summary Category** S5000

Idc Change Reason debris

Rigid Liner Present? No **LinerType** NO LINER

Liner Punctured? N/A **Sharp Objects?** No

Liner Lid Present? No **Sharp Objects Are Protected?** Yes

Liner Lid Deformed? N/A **Layers Of Confinement** 3

Fill Factor 97

Bag Closure Method Twisted and Taped

Liquids

Liquid Present? No **Internal Container with Liquid** No

Internal Container with Liquid 0 pints **LA Candidate** No

Liquid Between Liner & Drum 0 pints **Containerized Liquid**

Total Liquid Amount 0 pints **Containerized Liquid Amt** 0 pints

Other Liquids 0 pints **Comment**

Prohibited Liquids Present No **Comment**

Contents-Drum or Box

	Value	Comment		Value	Comment
Lead?	No		**Mercury Present?**	No	
Wet Cell Batteries?	No		**Explosives?**	No	
Prohibited Compressed Gases?	No		**PCBs Present?**	No	
Aerosol Cans?	No		**PCB Mass (lbs)**	0	
Non-Mixed Hazardous Waste Present?	No		**Sealed Containers Over 4L?**	No	

Non-Radionuclide Pyrophoric Materials Present? No

Waste exhibiting the characteristics of Ignitability, Corrosivity or Reactivity Present? No

Wastes Incompatible with backfill, seal and panel closure materials, container and packaging materials,shipping container or other wastes? No

Impenetrable Dense Objects? No

Waste Material Items

Packaging Materials

Material Item	Quantity	Unit	Unit Wt(lbs)	Item Wt(lbs)
Drum plastic bag	2.000	EACH	1.000	2.000

Waste Items byWeight

Material Item	Quantity	Unit	Unit Wt(lbs)	Item Wt(lbs)
respirator filters	1.000	EACH	5.000	5.000
paper ppe and wood	1.000	EACH	5.000	5.000
Plastic bag for waste	1.000	EACH	0.250	0.250

Waste Items by Volume

Material Item	Quantity	Unit	Unit Wt(lbs)	Item Wt(lbs)
Oil-Dri (Inside 55 gal drum)	16.000	PINTS	0.420	6.720

Batch Id RTR13-00324 **Container Id** 10359822 **Analysis Id** 0000094290

Waste Parameters

Waste Parameter	Remaining Weight %	Actual Weight Lbs
Iron-based Metals/Alloys	0.000	0.000
Aluminum-based Metals/Alloys	0.000	3.500
Other metals	0.000	0.000
Other Inorganic Materials	0.000	6.720
Cellulosics	0.000	6.500
Rubber	0.000	0.000
Plastic (Waste Materials)	100.000	65.605
Inorganic matrix	0.000	0.000
Organic matrix	0.000	0.000
Soils/gravel	0.000	0.000
Steel (packaging materials)	0.000	59.000
Plastic (packaging materials)	0.000	2.000
Cellulosics Packaging	0.000	0.000

Analysis Esignature History

Esig Approval Id	User Id	Esignature Date	Comment
2679886	KHUGHES	26-JAN-2014 14:45	
2670127	CHINKLE	19-DEC-2013 12:26	This batch is returned for rework. AK does not concur with the recommended IDC change for containers 10452573, 10447245, 10369045, 10368229, 10367220, 10366647, 10366375, 10357111, 10357099 and10352602. CHD 12/19/13
2668902	MRICKS	16-DEC-2013 11:31	

Batch Id RTR13-00324 **Container Id** 10366365 **Analysis Id** 0000094291

Container Type A drum, 55 Gallon Drum (17H) **Analysis Status** Pass

RTR Date 16-DEC-2013 11:56 **Gross Weight** 160.965 **Lbs.** **Net Weight** 99.965 **Lbs**

Equipment Z-213-101 **Waste Matrix Code** S5490 **IDC** RF-760 RFP Debris

Recording Id 1RTR13-00176 **Procedure Id** INST-OI-12 **Revision** 52 **Approval Level** SPM

Is Test Pattern Resolution Ok? Yes **Start Side** A **Replicate** No **OIO** No

Audio Visual Ok? Yes **Operator** MRICKS

Result Comment Primary waste appears to be plastic sheeting ,test tubes, bottles bags and misc items.
AK concurs with the recommended IDC, RF-760, for container 10366365. No AKR or NCR is necessary. CHD 12/19/13

Package

IDC Correct Yes **Recommended IDC** RF-760 **Summary Category** S5000

Idc Change Reason RF debris

Rigid Liner Present? No **LinerType** NO LINER

Liner Punctured? N/A **Sharp Objects?** No

Liner Lid Present? No **Sharp Objects Are Protected?** Yes

Liner Lid Deformed? N/A **Layers Of Confinement** 3

Fill Factor 97

Bag Closure Method Twisted and Taped

Liquids

Liquid Present? Yes **Internal Container with Liquid** Yes

Internal Container with Liquid .22 pints **LA Candidate** No

Liquid Between Liner & Drum 0 pints **Containerized Liquid**

Total Liquid Amount .22 pints **Containerized Liquid Amt** 0 pints

Other Liquids 0 pints **Comment** 2 containers <60 mil liquid

Prohibited Liquids Present No **Comment**

Contents-Drum or Box

	Value	Comment		Value	Comment
Lead?	No		**Mercury Present?**	No	
Wet Cell Batteries?	No		**Explosives?**	No	
Prohibited Compressed Gases?	No		**PCBs Present?**	No	
Aerosol Cans?	No		**PCB Mass (lbs)**	0	
Non-Mixed Hazardous Waste Present?	No		**Sealed Containers Over 4L?**	No	

Non-Radionuclide Pyrophoric Materials Present? No

Waste exhibiting the characteristics of Ignitability, Corrosivity or Reactivity Present? No

Wastes Incompatible with backfill, seal and panel closure materials, container and packaging materials,shipping container or other wastes? No

Impenetrable Dense Objects? No

Waste Material Items

Packaging Materials

Material Item	Quantity	Unit	Unit Wt(lbs)	Item Wt(lbs)
Drum plastic bag	2.000	EACH	1.000	2.000

Waste Items byWeight

Material Item	Quantity	Unit	Unit Wt(lbs)	Item Wt(lbs)
bottle	1.000	EACH	0.200	0.200
metal can	1.000	EACH	0.200	0.200
glass	1.000	EACH	20.000	20.000
paper	1.000	EACH	2.000	2.000
misc metal	1.000	EACH	2.000	2.000
Cardboard liner	1.000	EACH	4.000	4.000
Plastic bag for waste	1.000	EACH	0.250	0.250

Batch Id RTR13-00324 **Container Id** 10366365 **Analysis Id** 0000094291

Waste Items by Volume

Material Item	Quantity	Unit	Unit Wt(lbs)	Item Wt(lbs)
Oil-Dri (Inside 55 gal drum)	12.000	PINTS	0.420	5.040
Liquids for Other Inorganics	0.220	PINTS	1.000	0.220

Waste Parameters

Waste Parameter	Remaining Weight %	Actual Weight Lbs
Iron-based Metals/Alloys	0.000	2.200
Aluminum-based Metals/Alloys	0.000	0.000
Other metals	0.000	0.000
Other Inorganic Materials	0.000	25.260
Cellulosics	0.000	6.000
Rubber	0.000	0.000
Plastic (Waste Materials)	100.000	66.505
Inorganic matrix	0.000	0.000
Organic matrix	0.000	0.000
Soils/gravel	0.000	0.000
Steel (packaging materials)	0.000	59.000
Plastic (packaging materials)	0.000	2.000
Cellulosics Packaging	0.000	0.000

Analysis Esignature History

Esig Approval Id	User Id	Esignature Date	Comment
2670126	CHINKLE	19-DEC-2013 12:26	This batch is returned for rework. AK does not concur with the recommended IDC change for containers 10452573, 10447245, 10369045, 10368229, 10367220, 10366647, 10366375, 10357111, 10357099 and10352602. CHD 12/19/13
2668921	MRICKS	16-DEC-2013 11:58	oops
2668920	MRICKS	16-DEC-2013 11:56	

Batch Id RTR13-00324 **Container Id** 10447245 **Analysis Id** 0000094292

Container Type A drum, 55 Gallon Drum (17H) **Analysis Status** Pass

RTR Date 16-DEC-2013 13:19 **Gross Weight** 183.015 Lbs. **Net Weight** 122.015 Lbs.

Equipment Z-213-101 **Waste Matrix Code** S5490 **IDC** RF-760 RFP Debris

Recording Id 1RTR13-00176 **Procedure Id** INST-OI-12 **Revision** 52 **Approval Level** SPM

Is Test Pattern Resolution Ok? Yes **Start Side** A **Replicate** No **OIO** No

Audio Visual Ok? Yes **Operator** SJORDAN

Result Comment Drum contents appear to be Respirator Cartridges.
AK does not concur with the recommended IDC change from UN-000 to UN-00B for container 10447245 because waste is debris retrieved from Pad 1, cells 1 and 2. Instead, AK recommends an IDC of RF-760. CHD 12/19/13
Rework to correct IDC per AK. ESO 12/23/13
AK concurs with the recommended IDC, RF-760, for container 10447245. No AKR or NCR is necessary. CHD 01/06/14

Package

IDC Correct Yes **Recommended IDC** RF-760 **Summary Category** S5000

Idc Change Reason Per AK

Rigid Liner Present? No **LinerType** NO LINER

Liner Punctured? N/A **Sharp Objects?** No

Liner Lid Present? No **Sharp Objects Are Protected?** Yes

Liner Lid Deformed? N/A **Layers Of Confinement** 3

Fill Factor 95

Bag Closure Method Twisted and Taped

Liquids

Liquid Present? No **Internal Container with Liquid** No

Internal Container with Liquid 0 pints **LA Candidate** No

Liquid Between Liner & Drum 0 pints **Containerized Liquid**

Total Liquid Amount 0 pints **Containerized Liquid Amt** 0 pints

Other Liquids 0 pints **Comment**

Prohibited Liquids Present No **Comment**

Contents-Drum or Box

	Value	Comment		Value	Comment
Lead?	Yes, Acceptable	lead tape	**Mercury Present?**	No	
Wet Cell Batteries?	No		**Explosives?**	No	
Prohibited Compressed Gases?	No		**PCBs Present?**	No	
Aerosol Cans?	No		**PCB Mass (lbs)**	0	
Non-Mixed Hazardous Waste Present?	No		**Sealed Containers Over 4L?**	No	

Non-Radionuclide Pyrophoric Materials Present? No

Waste exhibiting the characteristics of Ignitability, Corrosivity or Reactivity Present? No

Wastes Incompatible with backfill, seal and panel closure materials, container and packaging materials,shipping container or other wastes? No

Impenetrable Dense Objects? No

Waste Material Items

Packaging Materials

Material Item	Quantity	Unit	Unit Wt(lbs)	Item Wt(lbs)
Drum plastic bag	2.000	EACH	1.000	2.000

Waste Items byWeight

Material Item	Quantity	Unit	Unit Wt(lbs)	Item Wt(lbs)
lead tape	1.000	EACH	0.250	0.250
paper and rags.	1.000	EACH	5.000	5.000
Plastic bag for waste	4.000	EACH	0.250	1.000

Waste Items by Volume

Material Item	Quantity	Unit	Unit Wt(lbs)	Item Wt(lbs)
Vermiculite (95 gm/liter) .125 lb/pint	16.000	PINTS	0.125	2.000

Batch Id RTR13-00324 **Container Id** 10447245 **Analysis Id** 0000094292

Waste Parameters

Waste Parameter	Remaining Weight %	Actual Weight Lbs
Iron-based Metals/Alloys	0.000	0.000
Aluminum-based Metals/Alloys	70.000	79.636
Other metals	0.000	0.250
Other Inorganic Materials	0.000	2.000
Cellulosics	30.000	39.130
Rubber	0.000	0.000
Plastic (Waste Materials)	0.000	1.000
Inorganic matrix	0.000	0.000
Organic matrix	0.000	0.000
Soils/gravel	0.000	0.000
Steel (packaging materials)	0.000	59.000
Plastic (packaging materials)	0.000	2.000
Cellulosics Packaging	0.000	0.000

Analysis Esignature History

Esig Approval Id	User Id	Esignature Date	Comment
2671698	CHINKLE	06-JAN-2014 07:43	Batch is promoted. chd 01/06/14
2670861	SOLDHAM	23-DEC-2013 09:28	
2670120	CHINKLE	19-DEC-2013 12:26	This batch is returned for rework. AK does not concur with the recommended IDC change for containers 10452573, 10447245, 10369045, 10368229, 10367220, 10366647, 10366375, 10357111, 10357099 and10352602. CHD 12/19/13
2668958	SJORDAN	16-DEC-2013 13:19	

Batch Id RTR13-00324 **Container Id** 10355574 **Analysis Id** 0000094293

Container Type 85 FOR NEW DRUM - 85 **Analysis Status** Pass

RTR Date 16-DEC-2013 13:49 **Gross Weight** 586.530 **Lbs.** **Net Weight** 419.530 **Lbs.**

Equipment Z-213-101 **Waste Matrix Code** S3121 **IDC** RF-001 First Stage Sludge

Recording Id 1RTR13-00176 **Procedure Id** INST-OI-12 **Revision** 52 **Approval Level** SPM

Is Test Pattern Resolution Ok? Yes **Start Side** A **Replicate** No **OIO** No

Audio Visual Ok? Yes **Operator** SJORDAN

Result Comment Drum contents appear to be Sludge.

Package

IDC Correct Yes **Recommended IDC** **Summary Category** S3000

Idc Change Reason

Rigid Liner Present? Yes **LinerType** TYPE 1

Liner Punctured? Yes **Sharp Objects?** No

Liner Lid Present? Yes **Sharp Objects Are Protected?** Yes

Liner Lid Deformed? No **Layers Of Confinement** 2

Fill Factor 85

Bag Closure Method Twisted and Taped

Liquids

Liquid Present? Yes **Internal Container with Liquid** No

Internal Container with Liquid 0 pints **LA Candidate** No

Liquid Between Liner & Drum 12.5 pint **Containerized Liquid**

Total Liquid Amount 12.59 pints **Containerized Liquid Amt** 0 pints

Other Liquids .09 pints **Comment** liquid between liner and drum and liquid in pockets along side of the waste.

Prohibited Liquids Present Yes **Comment** Liquid >1% by volume.

Contents-Drum or Box

	Value	Comment		Value	Comment
Lead?	No		**Mercury Present?**	No	
Wet Cell Batteries?	No		**Explosives?**	No	
Prohibited Compressed Gases?	No		**PCBs Present?**	No	
Aerosol Cans?	No		**PCB Mass (lbs)**	0	
Non-Mixed Hazardous Waste Present?	No		**Sealed Containers Over 4L?**	No	

Non-Radionuclide Pyrophoric Materials Present? No

Waste exhibiting the characteristics of Ignitability, Corrosivity or Reactivity Present? No

Wastes Incompatible with backfill, seal and panel closure materials, container and packaging materials,shipping container or other wastes? No

Impenetrable Dense Objects? No

Waste Material Items

Packaging Materials

Material Item	Quantity	Unit	Unit Wt(lbs)	Item Wt(lbs)
90 mil liner	1.000	EACH	16.000	16.000
Drum plastic bag	1.000	EACH	1.000	1.000
O-ring plastic bag	1.000	EACH	4.000	4.000
55-GAL DRUM (17c)	1.000	EACH	59.000	59.000

Waste Items byWeight

Material Item	Quantity	Unit	Unit Wt(lbs)	Item Wt(lbs)

Waste Items by Volume

Material Item	Quantity	Unit	Unit Wt(lbs)	Item Wt(lbs)
Liquids for Inorganic Matrix	12.590	PINTS	1.000	12.590

Batch Id RTR13-00324 **Container Id** 10355574 **Analysis Id** 0000094293

Waste Parameters

Waste Parameter	Remaining Weight %	Actual Weight Lbs
Iron-based Metals/Alloys	0.000	0.000
Aluminum-based Metals/Alloys	0.000	0.000
Other metals	0.000	0.000
Other Inorganic Materials	0.000	0.000
Cellulosics	0.000	0.000
Rubber	0.000	0.000
Plastic (Waste Materials)	0.000	0.000
Inorganic matrix	100.000	419.530
Organic matrix	0.000	0.000
Soils/gravel	0.000	0.000
Steel (packaging materials)	0.000	146.000
Plastic (packaging materials)	0.000	21.000
Cellulosics Packaging	0.000	0.000

Analysis Esignature History

Esig Approval Id	User Id	Esignature Date	Comment
2668987	SJORDAN	16-DEC-2013 13:50	

Batch Id RTR13-00324 **Container Id** 10355578 **Analysis Id** 0000094294

Container Type 85 FOR NEW DRUM - 85 **Analysis Status** Pass

RTR Date 16-DEC-2013 14:26 **Gross Weight** 588.735 **Lbs.** **Net Weight** 424.735 **Lbs.**

Equipment Z-213-101 **Waste Matrix Code** S3121 **IDC** RF-002 Second Stage Sludge

Recording Id 1RTR13-00176 **Procedure Id** INST-OI-12 **Revision** 52 **Approval Level** SPM

Is Test Pattern Resolution Ok? Yes **Start Side** A **Replicate** No **OIO** No

Audio Visual Ok? Yes **Operator** SJORDAN

Result Comment Drum contents appear to be Sludge.

Package

IDC Correct Yes **Recommended IDC** **Summary Category** S3000

Idc Change Reason

Rigid Liner Present? Yes **LinerType** TYPE 1

Liner Punctured? Yes **Sharp Objects?** No

Liner Lid Present? Yes **Sharp Objects Are Protected?** Yes

Liner Lid Deformed? No **Layers Of Confinement** 2

Fill Factor 75

Bag Closure Method Twisted and Taped

Liquids

Liquid Present? Yes **Internal Container with Liquid** No

Internal Container with Liquid 0 pints **LA Candidate** No

Liquid Between Liner & Drum 12 pints **Containerized Liquid**

Total Liquid Amount 14.03 pints **Containerized Liquid Amt** 0 pints

Other Liquids 2.03 pints **Comment** 12 pints of liquid between drum and liner, 2 pints of liquid between 83 gallon and 55 gallon drum and .03 pints of liquid in a pocket in the waste near the bottom chine.

Prohibited Liquids Present Yes **Comment** liquid >1% by volume.

Contents-Drum or Box

	Value	Comment		Value	Comment
Lead?	No		**Mercury Present?**	No	
Wet Cell Batteries?	No		**Explosives?**	No	
Prohibited Compressed Gases?	No		**PCBs Present?**	No	
Aerosol Cans?	No		**PCB Mass (lbs)**	0	
Non-Mixed Hazardous Waste Present?	No		**Sealed Containers Over 4L?**	No	

Non-Radionuclide Pyrophoric Materials Present? No

Waste exhibiting the characteristics of Ignitability, Corrosivity or Reactivity Present? No

Wastes Incompatible with backfill, seal and panel closure materials, container and packaging materials,shipping container or other wastes? No

Impenetrable Dense Objects? No

Waste Material Items

Packaging Materials

Material Item	Quantity	Unit	Unit Wt(lbs)	Item Wt(lbs)
90 mil liner	1.000	EACH	16.000	16.000
Drum plastic bag	2.000	EACH	1.000	2.000
55-GAL DRUM (17c)	1.000	EACH	59.000	59.000

Waste Items byWeight

Material Item	Quantity	Unit	Unit Wt(lbs)	Item Wt(lbs)

Batch Id RTR13-00324 **Container Id** 10355578 **Analysis Id** 0000094294

Waste Items by Volume

Material Item	Quantity	Unit	Unit Wt(lbs)	Item Wt(lbs)
Liquids for Inorganic Matrix	14.030	PINTS	1.000	14.030

Waste Parameters

Waste Parameter	Remaining Weight %	Actual Weight Lbs
Iron-based Metals/Alloys	0.000	0.000
Aluminum-based Metals/Alloys	0.000	0.000
Other metals	0.000	0.000
Other Inorganic Materials	0.000	0.000
Cellulosics	0.000	0.000
Rubber	0.000	0.000
Plastic (Waste Materials)	0.000	0.000
Inorganic matrix	100.000	424.735
Organic matrix	0.000	0.000
Soils/gravel	0.000	0.000
Steel (packaging materials)	0.000	146.000
Plastic (packaging materials)	0.000	18.000
Cellulosics Packaging	0.000	0.000

Analysis Esignature History

Esig Approval Id	User Id	Esignature Date	Comment
2669027	SJORDAN	16-DEC-2013 14:26	

Batch Id RTR13-00324 **Container Id** 10355574 **Analysis Id** 0000094295

Container Type 85 FOR NEW DRUM - 85 **Analysis Status** Pass

RTR Date 16-DEC-2013 15:32 **Gross Weight** 586.530 **Lbs.** **Net Weight** 422.530 **Lbs.**

Equipment Z-213-101 **Waste Matrix Code** S3121 **IDC** RF-001 First Stage Sludge

Recording Id 1RTR13-00176 **Procedure Id** INST-OI-12 **Revision** 52 **Approval Level** SPM

Is Test Pattern Resolution Ok? Yes **Start Side** A **Replicate** Yes **OIO** No

Audio Visual Ok? Yes **Operator** CBEEBE

Result Comment The remaining waste appears to be sludge.

Package

IDC Correct Yes **Recommended IDC** **Summary Category** S3000

Idc Change Reason

Rigid Liner Present? Yes **LinerType** TYPE 1

Liner Punctured? Yes **Sharp Objects?** No

Liner Lid Present? Yes **Sharp Objects Are Protected?** Yes

Liner Lid Deformed? No **Layers Of Confinement** 2

Fill Factor 80

Bag Closure Method Twisted and Taped

Liquids

Liquid Present? Yes **Internal Container with Liquid** No

Internal Container with Liquid 0 pints **LA Candidate** No

Liquid Between Liner & Drum 12.5 pint **Containerized Liquid**

Total Liquid Amount 13.5 pints **Containerized Liquid Amt** 0 pints

Other Liquids 1 pints **Comment** Approx. 1 cup liquid on top of the liner lid and 12 pts. of liquid between the liner and the drum up the side,and approx. 1 pt. of liquid in the bagging along the side between the bottom and middle chine.

Prohibited Liquids Present Yes **Comment** Liquid > 1% by volume.

Contents-Drum or Box

	Value	Comment		Value	Comment
Lead?	No		**Mercury Present?**	No	
Wet Cell Batteries?	No		**Explosives?**	No	
Prohibited Compressed Gases?	No		**PCBs Present?**	No	
Aerosol Cans?	No		**PCB Mass (lbs)**	0	
Non-Mixed Hazardous Waste Present?	No		**Sealed Containers Over 4L?**	No	

Non-Radionuclide Pyrophoric Materials Present? No

Waste exhibiting the characteristics of Ignitability, Corrosivity or Reactivity Present? No

Wastes Incompatible with backfill, seal and panel closure materials, container and packaging materials,shipping container or other wastes? No

Impenetrable Dense Objects? No

Waste Material Items

Packaging Materials

Material Item	Quantity	Unit	Unit Wt(lbs)	Item Wt(lbs)
90 mil liner	1.000	EACH	16.000	16.000
Drum plastic bag	2.000	EACH	1.000	2.000
55-GAL DRUM (17c)	1.000	EACH	59.000	59.000

Waste Items byWeight

Material Item	Quantity	Unit	Unit Wt(lbs)	Item Wt(lbs)

Batch Id RTR13-00324 **Container Id** 10355574 **Analysis Id** 0000094295

Waste Items by Volume

Material Item	Quantity	Unit	Unit Wt(lbs)	Item Wt(lbs)
Liquids for Inorganic Matrix	13.500	PINTS	1.000	13.500

Waste Parameters

Waste Parameter	Remaining Weight %	Actual Weight Lbs
Iron-based Metals/Alloys	0.000	0.000
Aluminum-based Metals/Alloys	0.000	0.000
Other metals	0.000	0.000
Other Inorganic Materials	0.000	0.000
Cellulosics	0.000	0.000
Rubber	0.000	0.000
Plastic (Waste Materials)	0.000	0.000
Inorganic matrix	100.000	422.530
Organic matrix	0.000	0.000
Soils/gravel	0.000	0.000
Steel (packaging materials)	0.000	146.000
Plastic (packaging materials)	0.000	18.000
Cellulosics Packaging	0.000	0.000

Analysis Esignature History

Esig Approval Id	User Id	Esignature Date	Comment
2669064	CBEEBE	16-DEC-2013 15:32	

Batch Id RTR13-00324 **Container Id** 10355578 **Analysis Id** 0000094296

Container Type 85 FOR NEW DRUM - 85 **Analysis Status** Pass

RTR Date 16-DEC-2013 16:05 **Gross Weight** 588.735 Lbs. **Net Weight** 424.735 Lbs.

Equipment Z-213-101 **Waste Matrix Code** S3121 **IDC** RF-002 Second Stage Sludge

Recording Id 1RTR13-00176 **Procedure Id** INST-OI-12 **Revision** 52 **Approval Level** SPM

Is Test Pattern Resolution Ok? Yes **Start Side** A **Replicate** No **OIO** Yes

Audio Visual Ok? Yes **Operator** CBEEBE

Result Comment The remaining waste appears to be sludge. cb.

Package

IDC Correct Yes **Recommended IDC** **Summary Category** S3000

Idc Change Reason

Rigid Liner Present? Yes **LinerType** TYPE 1

Liner Punctured? Yes **Sharp Objects?** No

Liner Lid Present? Yes **Sharp Objects Are Protected?** Yes

Liner Lid Deformed? No **Layers Of Confinement** 2

Fill Factor 80

Bag Closure Method Twisted and Taped

Liquids

Liquid Present? Yes **Internal Container with Liquid** No

Internal Container with Liquid 0 pints **LA Candidate** No

Liquid Between Liner & Drum 12 pints **Containerized Liquid**

Containerized Liquid Amt 0 pints

Total Liquid Amount 14.06 pints

Other Liquids 2.06 pints **Comment** Approx. 2 pints of liquid between the 83 gallon drum and the 55 gallon drum. Approx. 12 pts. of liquid between the 55 gallon drum and liner and approx. 2 tbs. in a pocket in the bagging.

Prohibited Liquids Present Yes **Comment** Liquid > 1% by volume.

Contents-Drum or Box

	Value	Comment		Value	Comment
Lead?	No		Mercury Present?	No	
Wet Cell Batteries?	No		Explosives?	No	
Prohibited Compressed Gases?	No		PCBs Present?	No	
Aerosol Cans?	No		PCB Mass (lbs)	0	
Non-Mixed Hazardous Waste Present?	No		Sealed Containers Over 4L?	No	

Non-Radionuclide Pyrophoric Materials Present? No

Waste exhibiting the characteristics of Ignitability, Corrosivity or Reactivity Present? No

Wastes Incompatible with backfill, seal and panel closure materials, container and packaging materials,shipping container or other wastes? No

Impenetrable Dense Objects? No

Waste Material Items

Packaging Materials

Material Item	Quantity	Unit	Unit Wt(lbs)	Item Wt(lbs)
90 mil liner	1.000	EACH	16.000	16.000
Drum plastic bag	2.000	EACH	1.000	2.000
55-GAL DRUM (17c)	1.000	EACH	59.000	59.000

Waste Items byWeight

Material Item	Quantity	Unit	Unit Wt(lbs)	Item Wt(lbs)

Batch Id RTR13-00324 **Container Id** 10355578 **Analysis Id** 0000094296

Waste Items by Volume

Material Item	Quantity	Unit	Unit Wt(lbs)	Item Wt(lbs)
Liquids for Inorganic Matrix	14.060	PINTS	1.000	14.060

Waste Parameters

Waste Parameter	Remaining Weight %	Actual Weight Lbs
Iron-based Metals/Alloys	0.000	0.000
Aluminum-based Metals/Alloys	0.000	0.000
Other metals	0.000	0.000
Other Inorganic Materials	0.000	0.000
Cellulosics	0.000	0.000
Rubber	0.000	0.000
Plastic (Waste Materials)	0.000	0.000
Inorganic matrix	100.000	424.735
Organic matrix	0.000	0.000
Soils/gravel	0.000	0.000
Steel (packaging materials)	0.000	146.000
Plastic (packaging materials)	0.000	18.000
Cellulosics Packaging	0.000	0.000

RTR Independent Observation

Obsolete	Performed	User Name	Checklist	Answer
No	19-JAN-2014 16:36	JSIMONSON	1.Was an independent observation performed?	Yes
			2.Were all items on the recording media identified correctly in WTS?	Yes
			3.Do you agree with the operator?	No

Comment On 16-Dec-2013 a qualified operator performed the OIO analysis for batch RTR13-00324 on container 10355578. There were small differences in the Fill Factor percentage, the liquid amounts, and the Waste Items by Volume between the Original analysis and the OIO analysis. These differences do not affect the original disposition of the container or the DQOs. I agree with the Original Operator. No rework will be performed on the OIO analysis.

Independent Observation Esignature History

Esig Approval Id	User Id	Esignature Date	Comment
2677177	JSIMONSON	19-JAN-2014 16:36	ITR OIO Comparison complete.

Analysis Esignature History

Esig Approval Id	User Id	Esignature Date	Comment
2669099	CBEEBE	16-DEC-2013 16:05	

AMWTP
Advanced Mixed Waste Treatment Project

INFORMATION ONLY NON-CONFORMANCE REPORT

WIPP DATA - RTR

NCR #: 82907

Title: RTR Characterization

Originator: Jordan, Shawn	**Date Opened:** 12/16/13
Tag Applied: Yes	**Responsible Dept:** Plant Manager
Container ID: 10355574	**Batch #:** RTR13-00324

Characterization Problem: Liquids

LIQUIDS IDENTIFIED

Observable Liquid shall be less than 1% by Volume of the outermost container. Equal/Greater than 1% Volume? YES

Internal containers with more than 60 mL or 3% by Volume Observable Liquid is Prohibited. Greater than 60ML/3% Volume?

Containers with Hazardous Waste Number (HWN) U134 assigned shall have no observable liquid. Observable liquid identified?

Originator Sign By: Shawn Jordan	**Originator Sign Date:** 12/16/13

Production Comments: **Approved Remediation:** **ARP Remediation**

12.5 pints of liquid between the liner and drum. SJ. 12/16/13
Container is slated to be transferred to WMF-1617 Sludge Repackage Project (SRP) for Treatment/Remediation; Approved Remediation has been changed to "ARP Remediation" KLB 6/11/14

Performed By: Kathy Birch	**Performed Date:** 06/12/14

Waste Programs Evaluation/Verification:

This drum is comprised of CCP sludge waste and is slated for Sludge Repack Processing (SRP) at CWI. The container has been identified in IWTS for SRP, as evidence in the attached file. KLB 6/12/14

SPM Verification Complete By: Kathy Birch	**SPM Verification Complete Date:** 06/12/14
MLLW/LLW Verification Complete By:	**MLLW/LLW Verification Complete Date:**

QA Closure Comments:

QA Verification: Container data identified on IWTS Ship Task SRP14-044 report has been reviewed and verified accurate in WTS for transfer to CWI for Sludge Repack Processing. The container is identified on the attached Ship Task List. No further action required. T. Cook 6/12/14

QA Add'l Action Reqd By:	**QA Add'l Action Reqd Date:**
QA Verification Complete By: Terry Cook	**QA Verification Comp Date:** 06/12/14

AMWTP
Advanced Mixed Waste Treatment Project

INFORMATION ONLY NON-CONFORMANCE REPORT

WIPP DATA - RTR

NCR #: 24793

Title: Liquids > 1% by volume	
Originator: Johnston, Dallas	**Date Opened:** 12/10/06
Tag Applied: Yes	**Responsible Dept:** Plant Manager
Container ID: 10355574	**Batch #:** RTR06-00562
Characterization Problem: Liquids	

LIQUIDS IDENTIFIED

Observable Liquid shall be less than 1% by Volume of the outermost container. Equal/Greater than 1% Volume?

Internal containers with more than 60 mL or 3% by Volume Observable Liquid is Prohibited. Greater than 60ML/3% Volume?

Containers with Hazardous Waste Number (HWN) U134 assigned shall have no observable liquid. Observable liquid identified?

Originator Sign By: Ann Anthony-Kuck	**Originator Sign Date:** 12/12/06

Production Comments: **Approved Remediation:** **Re-Characterization**

Liquid vbetween drum and liner. DJ 12/10/06ITR Update: The 5.5 pts liquid identified between the liner and the drum is inaccessible and should not be considered an LA Candidate. Therefore I am correcting the RTR Characterization and RTR Remediation selections above.
QA Update: Container 10129963 was overpacked into 10355574. VDBowman 04/14/10D.Gasper 12/16/06
Container 10129963 has been over-packed into container 10355574. Container 10129963 was characterized in batch RTR06-00562 and container 10355574 was characterized in batch RTR13-00324. NCR-82907 has been written to address the prohibited liquids; recommend closure of NCR-24793. RAW 02/05/14

Performed By: Reed Walker	**Performed Date:** 02/05/14

Waste Programs Evaluation/Verification:

SPM Verification Statement: container 10129963 has been over-packed into container 10355574. Container 10129963 was characterized in batch RTR06-00562 and container 10355574 was characterized in batch RTR13-00324. NCR-82907 has been written to address the prohibited liquids; recommend closure of NCR-24793. RAW 02/05/14

SPM Verification Complete By: Reed Walker	**SPM Verification Complete Date:** 02/05/14
MLLW/LLW Verification Complete By:	**MLLW/LLW Verification Complete Date:**

QA Closure Comments:

QA Closure: Verified in WTS that container 10355574 (inner container 10129963) has been characterized as part of RTR13-00324 with valid results. NCR 82907 has been generated against 10355574 for the prohibited liquids. No further action is required of this NCR. C. Robison 02-06-14

QA Add'l Action Reqd By:	**QA Add'l Action Reqd Date:**
QA Verification Complete By: Camille Robison	**QA Verification Comp Date:** 02/06/14

Batch Id RTR13-00324 **Container Id** 10357734 **Analysis Id** 0000094297

Container Type C drum, 83 Gallon **Analysis Status** Pass

RTR Date 16-DEC-2013 16:34 **Gross Weight** 500.535 **Lbs.** **Net Weight** 341.535 **Lbs.**

Equipment Z-213-101 **Waste Matrix Code** S3121 **IDC** RF-002 Second Stage Sludge

Recording Id 1RTR13-00176 **Procedure Id** INST-OI-12 **Revision** 52 **Approval Level** SPM

Is Test Pattern Resolution Ok? Yes **Start Side** A **Replicate** No **OIO** No

Audio Visual Ok? Yes **Operator** SJORDAN

Result Comment Drum contents appear to be Sludge.

Package

IDC Correct Yes **Recommended IDC** **Summary Category** S3000

Idc Change Reason

Rigid Liner Present? Yes **LinerType** TYPE 1

Liner Punctured? Yes **Sharp Objects?** No

Liner Lid Present? Yes **Sharp Objects Are Protected?** Yes

Liner Lid Deformed? No **Layers Of Confinement** 1

Fill Factor 70

Bag Closure Method Twisted and Taped

Liquids

Liquid Present? Yes **Internal Container with Liquid** No

Internal Container with Liquid 0 pints **LA Candidate** No

Liquid Between Liner & Drum 0 pints **Containerized Liquid**

Total Liquid Amount 3 pints **Containerized Liquid Amt** 0 pints

Other Liquids 3 pints **Comment** Liquid between the 83 and 55 gallon drum.

Prohibited Liquids Present No **Comment**

Contents-Drum or Box

	Value	Comment		Value	Comment
Lead?	No		**Mercury Present?**	No	
Wet Cell Batteries?	No		**Explosives?**	No	
Prohibited Compressed Gases?	No		**PCBs Present?**	No	
Aerosol Cans?	No		**PCB Mass (lbs)**	0	
Non-Mixed Hazardous Waste Present?	No		**Sealed Containers Over 4L?**	No	

Non-Radionuclide Pyrophoric Materials Present? No

Waste exhibiting the characteristics of Ignitability, Corrosivity or Reactivity Present? No

Wastes Incompatible with backfill, seal and panel closure materials, container and packaging materials,shipping container or other wastes? No

Impenetrable Dense Objects? No

Waste Material Items

Packaging Materials

Material Item	Quantity	Unit	Unit Wt(lbs)	Item Wt(lbs)
90 mil liner	1.000	EACH	16.000	16.000
Drum plastic bag	1.000	EACH	1.000	1.000
55-GAL DRUM (17c)	1.000	EACH	59.000	59.000

Waste Items byWeight

Material Item	Quantity	Unit	Unit Wt(lbs)	Item Wt(lbs)

Waste Items by Volume

Material Item	Quantity	Unit	Unit Wt(lbs)	Item Wt(lbs)
Liquids for Inorganic Matrix	3.000	PINTS	1.000	3.000

Batch Id RTR13-00324 **Container Id** 10357734 **Analysis Id** 0000094297

Waste Parameters

Waste Parameter	Remaining Weight %	Actual Weight Lbs
Iron-based Metals/Alloys	0.000	0.000
Aluminum-based Metals/Alloys	0.000	0.000
Other metals	0.000	0.000
Other Inorganic Materials	0.000	0.000
Cellulosics	0.000	0.000
Rubber	0.000	0.000
Plastic (Waste Materials)	0.000	0.000
Inorganic matrix	100.000	341.535
Organic matrix	0.000	0.000
Soils/gravel	0.000	0.000
Steel (packaging materials)	0.000	142.000
Plastic (packaging materials)	0.000	17.000
Cellulosics Packaging	0.000	0.000

Analysis Esignature History

Esig Approval Id	User Id	Esignature Date	Comment
2669143	SJORDAN	16-DEC-2013 16:34	

------End of RTR Analysis Report------

AMWTP

Advanced Mixed Waste Treatment Project

AMWTP

RTR Replicate Comparison Report

Date: 11-Sep-2014

Time: 07:08

RTR Batch Id: RTR13-00324 **Container Id:** 10355574 **Equipment Id:** Z-213-101

Container type Description: **FOR NEW DRUM - 85** Gen-IDC: **RF-001** Gross Weight(Lbs): **586.53**

	Original Analysis		Replicate Analysis	
Analysis Id / Date:	0000094293	16-DEC-2013 13:49	0000094295	16-DEC-2013 15:32
Procedure /Revision:	INST-OI-12	52	INST-OI-12	52
Recording Media Id:	1RTR13-00176		1RTR13-00176	
Starting Position:	A		A	
Is Test Pattern Resolution Ok?	Y		Y	
Audio Visual Ok?	Y		Y	
Personnel Name:	SHAWN JORDAN		CONLEY BEEBE	
IDC Ok? / Recommended IDC:	Y		Y	
IDC Change Reason:				
Summary Category / Waste matrix Code:	S3000	S3121	S3000	S3121
Packaging				
Rigid Liner Present?	Y		Y	
Liner Type Code:	TYPE 1		TYPE 1	
Liner Punctured:	Y		Y	
Liner Lid Deformed:	N		N	
Layers Of Confinement:	2		2	
Sharp Objects?	N		N	
Sharp Objects Protected?	Y		Y	
Fill Factor(%):	85		80	
Bag Closure Method:	Twisted and Taped		Twisted and Taped	
Liner Lid Present?:	Y		Y	
Liquids: (Volume in Pints)				
Liquid Present?	Y		Y	
Internal Container with Liquid?	0		0	
Containerized Liquid	N	liquid between liner and drum and liquid in pockets along side of the waste.	N	Approx. 1 cup liquid on top of the liner lid and 12 pts. of liquid between the liner and the drum up the side,and approx. 1 pt. of liquid in the bagging along the side between the bottom and middle chine.
Other Liquids:	.09		1	
Internal Container with Liquid Amt:	0		0	
Liquid Between Liner and Drum:	12.5		12.5	
Containerized Liquid:	0		0	
Total Liquid Amount:	12.59		13.5	
LA Candidate?	N		N	
Prohibited Liquids Present	Y	Liquid >1% by volume.	Y	Liquid > 1% by volume.

Contents:	Y/N	Comments	Y/N	Comments
Sealed Containers over 4L?	N		N	
Lead Present?	N		N	
Explosives Present?	N		N	
Mercury Present?	N		N	

RTR Replicate Comparison Report

RTR Batch Id: RTR13-00324 **Container Id:** 10355574 **Equipment Id:** Z-213-101

	Original Analysis	Replicate Analysis
Wet Cell Batteries Detected?	N	N
Prohibited Compressed Gas Present?	N	N
PCBs Present?	N	N
PCB Mass (lbs)	0	0
Non-Radionuclide Pyrophoric Materials Present?	N	N
Waste exhibiting the characteristics of ignitability, Corrosivity or reactivity Present?	N	N
Non-Mixed Hazardous Waste Present?	N	N
Waste Incompatibles with backfill, Seal and panel closure materials, container and packaging material, shipping container or other wastes?	N	N
Impenetrable Dense Objects?	N	N
Result Comment:	Drum contents appear to be Sludge.	The remaining waste appears to be sludge.

E-signature

Esig Approval ID	User ID	Signature Date	Comment
2677139	JSIMONSON	19-JAN-14	ITR Replicate Comparison complete.

-----End of RTR Replicate Comparison Report-----

AMWTP
Advanced Mixed Waste Treatment Project

AMWTP

RTR/VE Update Analysis Report

Date: 11-Sep-2014

Time: 07:08

Affected Batch RTR13-00324 **Container Id** 10359474 **Analysis Id** 0000316059 **Analysis Status** Passed

VE Date 20-MAR-14 09:47:54 **Procedure Id** INST-FOI-17 **Gross Weight** 458.64 lbs.

Gen-IDC Id RF-002 Second Stage Sludge **Proc Rev** 27 **Net Weight** 397.64 lbs.

Waste Matrix S3121 **Summary Category Group** S3000 **Equipment ID** VE NGW C FAC

Container Type A **Affected Analysis ID** 0000094277

Operator 1 ROBERT PURCELL **Operator 2** ANTHONY SIGMON

General

Rigid Liner Present? No **Liner Punctured?** Yes **Liner Hole Size:** 20" in. **Liner Type** NO LINER

Liner Lid Present No **Fill Factor** 80 %

Liquids

Liquids Present? No **Comment**

Liquid Between Liner and Drum 0 pints **Other Liquids** 0 pints

Internal Container with Liquid 0 pints **Total Liquid Amount** 0 pints

Containerized Liquid pints

Prohibited Liquids Present No

Internal Container with Liquid No

Containerized Liquid

Contents

Sharp Objects? No **Are Sharp Objects Protected?** Yes

	Value	*Comment*
Prohibited Compressed Gas Present?	No	
Aerosol Cans Present?	No	
Explosives Present?	No	
Pyrophorics Present?	No	
Mercury Present?	No	
PCBs Present?	No	
PCB Mass (lbs)	0	
Wet Cell Batteries Present?	No	
Corrosives, Ignitables or Reactives Present?	No	
Beryllium Contaminates Present?	No	
Hazardous-Only Waste Present?	No	
Is Waste Incompatible with backfill, packaging materials, or shipping container materials?	No	
Impenetrable Dense Objects?	No	
Sealed Containers Over 4 liters?	No	

Affected Batch RTR13-00324 **Container Id** 10359474 **Analysis Id** 0000316059

---IDC Verification---

Is IDC correct? No **Recommended IDC** RF-002 Second Stage Sludge

IDC Change Reason IDC change per NCR 84742

Visual Exam Comment {Waste consists of sludge. - RTR comment from rtr batch RTR13-00324} RVU to perform IDC change per NCR 84742. RMP 03-20-14

---Closure---

Closure Date 27-DEC-71 00:00:00 **Closure Method** Twisted and Taped

Layers Of Confinement 2 **Overpack Required?** No

New Steel Lid? No

---IDC CODES---

Current Container IDC Code: RF-002 **Recommended IDC Code:** RF-002

--- Waste Material Items---

---Packaging Materials---

Material Item	Quantity	Unit	Unit Wt	Item Wt(lbs)
Drum plastic bag	2.000	EACH	1.000	2.000

---Waste Items by Weight---

Material Item	Quantity	Unit	Unit Wt	Item Wt(lbs)

---Waste Items by Volume---

Material Item	Quantity	Unit	Unit Wt	Item Wt(lbs)
Vermiculite (95 gm/liter) .125 lb/pint	32.000	PINTS	0.125	4.000

---Waste Parameters---

Waste Parameter	Remaining Weight %	Actual Weight Lbs
Iron-based Metals/Alloys	0.000	0.000
Aluminum-based Metals/Alloys	0.000	0.000
Other metals	0.000	0.000
Other Inorganic Materials	0.000	4.000
Cellulosics	0.000	0.000
Rubber	0.000	0.000
Plastic (Waste Materials)	0.000	0.000
Inorganic matrix	100.000	393.640
Organic matrix	0.000	0.000
Soils/gravel	0.000	0.000
Steel (packaging materials)	0.000	59.000
Plastic (packaging materials)	0.000	2.000
Cellulosics Packaging	0.000	0.000

---Container Filters---

WDS Filter Code	Event	Event Date	Entered By	Remove	Other Filter Model	Exclude
NF7DS	634 - DVS	07-DEC-13	SOLDHAM	N		
Filter Comment						
NF7DS	634 - DVS	02-DEC-13	PSWASSING	Y		
Filter Comment						

Affected Batch RTR13-00324 **Container Id** 10359474 **Analysis Id** 0000316059

E-Signature History

Esig Approval Id	User ID	E-signature Date	Comment
2719473	RPURCELL	20-MAR-14 09:48:02	
2719474	ASIGMEN	20-MAR-14 09:48:04	

End of RTR/VE Update Analysis Report

AMWTP
Advanced Mixed Waste Treatment Project

AMWTP

RTR/VE Update(RVU) Checklist Report

Date: 11-Sep-2014
Time: 07:09

Batch Id RTR13-00324 **Open Date** 15-DEC-13 **Close Date** 16-DEC-13

Container	10359474	**Analysis**	0000316059
Reviewer	DENISE LEE	**Approval Level**	Independent Technical Reviewer
Approval Date	20-MAR-14	**Review Iteration**	1

Question Text	Answer	Requirement	Comment
1. Is the Batch Data Report (BDR) and Quality Assurance (QA) documentation complete with the following: o Real-Time Radiography (RTR) Batch Coversheet o Table of Contents (manual review only) o RTR Analysis reports o Replicate Scan o Replicate Comparison o Independent Observation o ITR checklist (Form-1412, manual review only) o Form-1491, Batch Data Report Supplemental Comment Form (manual review only) o Associated NCRs (referenced in Waste Tracking System [WTS]) o Audio/Video Recording References?	Yes		The only documentation associated with this RTR/VE Update is the following: RTR/VE Update Analysis Report ITR checklist (Form-1412) Batch Data Report Supplemental Comment Form (Form-1491) Associated NCRs (referenced in WTS)
2. Are there 20 containers or less in the batch?	N/A		This ITR checklist is for RTR/VE Update only.
3. Was the image quality indicator (IQI) satisfactory?	N/A		This ITR checklist is for RTR/VE Update only.
4. Does every container in the batch reference an audio/video recording?	N/A		This ITR checklist is for RTR/VE Update only.
5. Is there a completed radiography data analysis for each container in the batch?	N/A		This ITR checklist is for RTR/VE Update only.
6. Was each RTR Operator qualified at the time of the radiography event?	Yes		Both VE Operators have a their current qualification
7. Was the data generated in a technically correct manner using the correct revision of INST-OI-12, Real-Time Radiography Operations (Drum)?	N/A		This ITR checklist is for RTR/VE Update only.
8. Was the correct procedure and revision documented on all analysis reports?	Yes		
9. Has the E-signature History review been performed?	Yes		
10. Does the RTR operator confirm that the physical form matched the waste stream description and waste matrix code?	N/A		This ITR checklist is for RTR/VE Update only.
11. Does the packaging weight plus the net weight equal the gross weight of the container in the estimated waste material parameters?	Yes		
12. Were all entries into the waste material items section assigned to the correct waste material parameters?	Yes		
13. Has the description of rigid liners and layers of confinement been properly documented, as applicable?	Yes		
14. Was the presence or absence of prohibited items properly documented?	Yes		
15. If prohibited items were identified, have appropriate nonconformance reports (NCRs) been generated?	N/A		
16. Were the containers examined between October and April in compliance with the preheat requirements?	N/A		This ITR checklist is for RTR/VE Update only.
17. Were all proper units and significant figures used for all reported volumes/weights?	Yes		
18. Was there a valid replicate scan performed (at least one container per day, or once per testing batch, whichever is less frequent)? o Record the container number, the replicate observation date in the comment section of this checklist. o Record any issues or concerns in the batch comment section.	N/A		This ITR checklist is for RTR/VE Update only.
19. Was there a valid Operator Independent Observation (OIO) (not the replicate) performed (at least one container per day, or once per testing batch, whichever is less frequent)? o Record the container number and the OIO date in the	N/A		This ITR checklist is for RTR/VE Update only.

Batch Id RTR13-00324 **Open Date** 15-DEC-13 **Close Date** 16-DEC-13

Container	10359474	**Analysis**	0000316059
Reviewer	DENISE LEE	**Approval Level**	Independent Technical Reviewer
Approval Date	20-MAR-14	**Review Iteration**	1

Question Text	Answer	Requirement	Comment
comment section of this checklist. o Record any issues or concerns in the batch comment section.			
20. Were any significant differences identified that would affect the original disposition of the replicate and OIO, or affect data quality objectives (DQOs)? If so, ensure an NCR was generated and WTS flagged.	N/A		This ITR checklist is for RTR/VE Update only.
21. Were the RTR quality assurance objectives (QAOs) met? o Precision o Accuracy o Completeness o Comparability	N/A		Not all QAOs were checked.
22. Were any NCRs generated for containers containing prohibited items, or any non-conforming conditions that failed to meet DQOs or QAOs? o If so, include the NCRs, as appropriate, in the BDR.	N/A		
23. Were the rework requirements clearly identified in WTS or on the BDR?	N/A		

Batch Id RTR13-00324 **Open Date** 15-DEC-13 **Close Date** 16-DEC-13

Container 10359474 **Analysis** 0000316059
Reviewer DAVE MARQUARDT **Approval Level** SPM Data Validation
Approval Date 20-MAR-14 **Review Iteration** 1

Question Text	Answer	Requirement	Comment
(1) Has the batch received a Data Generation Level Independent Technical Review?	N/A	MP-TRUW-8.2, C3-10b(1)	
(2) Is the Independent Technical Review checklist complete?	N/A	MP-TRUW-8.2, C3-10b(1)	
(3) When identified, were polychlorinated biphenyls (PCBs), mercury, lead, or other hazardous contaminants consistent with the waste stream acceptable knowledge (AK) Summary Report(s) and/or AK documentation?	N/A	MP-TRUW-8.2, C4-3	
(4) Are any ignitable, corrosive, or reactive wastes identified in this waste?	N/A	MP-TRUW-8.2, C4-3	
(5) Are the packaging configurations identified on the real-time radiography (RTR) consistent with the waste stream AK Summary Report(s) and/or AK documentation?	N/A	MP-TRUW-8.2, C4-3	
(6) Do the containers in this batch contain typical waste items consistent with waste stream AK Summary Report(s) and/or AK documentation?	N/A	MP-TRUW-8.2, C4-3	
(7) Are the Waste Matrix Codes (WMCs) and physical form descriptions consistent with AK?	N/A	MP-TRUW-8.2, C4-3	
(8) Have all AK discrepancies been resolved and have all AK Resolution checklists been approved? Reference all waste stream AK documentation used in review of this data package.	N/A	MP-TRUW-8.2, C4-3	
(9) Have all applicable Quality Assurance Objectives (QAOs) been met, including precision, accuracy, completeness, and comparability, by using the appropriate acceptance criteria for each as specified in MP-TRUW-8.2, Quality Assurance Project Plan Section C3-4? Precision ¿ Verified prior to use by tuning precisely enough to demonstrate compliance with QAOs through viewing an image test pattern, as evidenced by a satisfactory Image Quality Indicator (IQI). ¿ Have discrepancies, if any, between radiography operators been reconciled? Accuracy ¿ Use of a target to tune the image for maximum sharpness as evidenced by a satisfactory IQI and by requiring operators to successfully identify 100% of the required items in a training container during initial and subsequent qualifications. Completeness ¿ An audio/videotape (or equivalent media) of the radiography examination and a validated radiography data form will be obtained for 100% of the retrievably stored waste container in the program for all waste containers subject to radiography. Comparability ¿ Use of standardized radiography procedures and operator qualifications.	N/A	MP-TRUW-8.2, C3-4a	
(10) Do the waste container contents match the WMC, waste stream description and identify the absence of prohibited items?	N/A	MP-TRUW-8.2, C1-3 and B3-11	
(11) If residual liquids exist in the container, is an estimate of quantity given?	N/A	MP-TRUW-8.2, C1-3	
(12) Do the individual container reports contain the (a) IDC, (b) Waste Matrix Code, (c) audio/video recording reference, (d) gross container weight, (e) waste material parameter weights, and (f) signature and date of examination?	N/A	MP-TRUW-8.2, C1-3 and C3-11a	

Batch Id RTR13-00324 **Open Date** 15-DEC-13 **Close Date** 16-DEC-13

Container	10359474	**Analysis**	0000316059
Reviewer	DAVE MARQUARDT	**Approval Level**	SPM Data Validation
Approval Date	20-MAR-14	**Review Iteration**	1

Question Text	Answer	Requirement	Comment
(13) Have the IDC, WMC, and/or waste stream for all containers in the batch remained the same as originally assigned by the historical designation? If not, note the container number in the comment field and notify the Acceptable Knowledge Expert (AKE) if NCR does not exist on the WMC and IDC change.	N/A	MP-TRUW-8.2, C1-3 and C3-4a	
(14) Was a replicate scan performed by an independent operator on at least one container per day or once per testing batch, whichever is less frequent, by a qualified radiography operator that was not involved in the original scan of the waste container?	N/A	MP-TRUW-8.2, B1-3, C3-4a, and C3-10b(1)	
(15) Has an independent observation of one scan (not the replicate) been performed by a qualified operator that was not involved in the original scan of the waste container, at a rate of once per day or once per batch, whichever is less frequent? Record date of observation and any issues or concerns in the comment section.	N/A	MP-TRUW-8.2, C1-3 and C3-4a	
(16) Did personnel having current qualifications perform all RTR examinations?	N/A	MP-TRUW-8.1, Appendix F	
(17) Verify the correct procedure and revision number were used for all containers in this batch.	N/A	MP-TRUW-8.2, C3-4a	
(18) Verify the audio and video checks were performed and are satisfactory.	N/A	MP-TRUW-8.2, C3-4a	
(19) Verify that there are 20 or fewer containers in the batch.	N/A	MP-TRUW-8.2, C1-3	
(20) Does the data for all containers within this batch meet the review, validation, and verification requirements? · Are proper units (e.g. Liters or pounds) and significant figure used? · Is the BDR complete (all pages identified in the BDR and numbered accordingly)? - RTR Batch Coversheet - Table of Contents (manual review only) - RTR Analysis reports - Replicate Scan - Replicate Comparison - Independent Observation - Form-1412, ITR checklist - Associated NCRs - Form, 1491, Batch Data Report Supplemental Comment Form, as applicable - Audio/Video Recording References	N/A	MP-TRUW-8.2, C3 10b(2)	
(21) Review all NCR(s) (open and closed). Can the batch be approved?	N/A	MP-TRUW-8.2, C3-13	
(22) Is all data associated with this BDR acceptable for signature release?	N/A	MP-TRUW-8.2, C3 10b(2)	

Batch Id RTR13-00324 **Open Date** 15-DEC-13 **Close Date** 16-DEC-13

Container 10359474 **Analysis** 0000316059
Reviewer DAVE MARQUARDT **Approval Level** SPM Data Validation
Approval Date 20-MAR-14 **Review Iteration** 2

Question Text	Answer	Requirement	Comment
(1) Has the batch received a Data Generation Level Independent Technical Review?	Yes	MP-TRUW-8.2, C3-10b(1)	
(2) Is the Independent Technical Review checklist complete?	Yes	MP-TRUW-8.2, C3-10b(1)	
(3) When identified, were polychlorinated biphenyls (PCBs), mercury, lead, or other hazardous contaminants consistent with the waste stream acceptable knowledge (AK) Summary Report(s) and/or AK documentation?	N/A	MP-TRUW-8.2, C4-3	None identified. This SPM checklist is for RTR/Update only.
(4) Are any ignitable, corrosive, or reactive wastes identified in this waste?	No	MP-TRUW-8.2, C4-3	This SPM checklist is for RTR/Update only.
(5) Are the packaging configurations identified on the real-time radiography (RTR) consistent with the waste stream AK Summary Report(s) and/or AK documentation?	N/A	MP-TRUW-8.2, C4-3	This SPM checklist is for RTR/Update only.
(6) Do the containers in this batch contain typical waste items consistent with waste stream AK Summary Report(s) and/or AK documentation?	Yes	MP-TRUW-8.2, C4-3	This SPM checklist is for RTR/Update only.
(7) Are the Waste Matrix Codes (WMCs) and physical form descriptions consistent with AK?	Yes	MP-TRUW-8.2, C4-3	This SPM checklist is for RTR/Update only.
(8) Have all AK discrepancies been resolved and have all AK Resolution checklists been approved? Reference all waste stream AK documentation used in review of this data package.	N/A	MP-TRUW-8.2, C4-3	This SPM checklist is for RTR/Update only.
(9) Have all applicable Quality Assurance Objectives (QAOs) been met, including precision, accuracy, completeness, and comparability, by using the appropriate acceptance criteria for each as specified in MP-TRUW-8.2, Quality Assurance Project Plan Section C3-4? Precision ¿ Verified prior to use by tuning precisely enough to demonstrate compliance with QAOs through viewing an image test pattern, as evidenced by a satisfactory Image Quality Indicator (IQI). ¿ Have discrepancies, if any, between radiography operators been reconciled? Accuracy ¿ Use of a target to tune the image for maximum sharpness as evidenced by a satisfactory IQI and by requiring operators to successfully identify 100% of the required items in a training container during initial and subsequent qualifications. Completeness ¿ An audio/videotape (or equivalent media) of the radiography examination and a validated radiography data form will be obtained for 100% of the retrievably stored waste container in the program for all waste containers subject to radiography. Comparability ¿ Use of standardized radiography procedures and operator qualifications.	N/A	MP-TRUW-8.2, C3-4a	This SPM checklist is for RTR/Update only.
(10) Do the waste container contents match the WMC, waste stream description and identify the absence of prohibited items?	Yes	MP-TRUW-8.2, C1-3 and B3-11	This SPM checklist is for RTR/Update only.
(11) If residual liquids exist in the container, is an estimate of quantity given?	N/A	MP-TRUW-8.2, C1-3	This SPM checklist is for RTR/Update only.
(12) Do the individual container reports contain the (a) IDC, (b) Waste Matrix Code, (c) audio/video recording reference, (d) gross container weight, (e) waste material parameter weights, and (f) signature and date of examination?	N/A	MP-TRUW-8.2, C1-3 and C3-11a	This SPM checklist is for RTR/Update only.

Batch Id RTR13-00324 **Open Date** 15-DEC-13 **Close Date** 16-DEC-13

Container	10359474	**Analysis**	0000316059
Reviewer	DAVE MARQUARDT	**Approval Level**	SPM Data Validation
Approval Date	20-MAR-14	**Review Iteration**	2

Question Text	Answer	Requirement	Comment
(13) Have the IDC, WMC, and/or waste stream for all containers in the batch remained the same as originally assigned by the historical designation? If not, note the container number in the comment field and notify the Acceptable Knowledge Expert (AKE) if NCR does not exist on the WMC and IDC change.	N/A	MP-TRUW-8.2, C1-3 and C3-4a	This SPM checklist is for RTR/Update only.
(14) Was a replicate scan performed by an independent operator on at least one container per day or once per testing batch, whichever is less frequent, by a qualified radiography operator that was not involved in the original scan of the waste container?	N/A	MP-TRUW-8.2, B1-3, C3-4a, and C3-10b(1)	This SPM checklist is for RTR/Update only.
(15) Has an independent observation of one scan (not the replicate) been performed by a qualified operator that was not involved in the original scan of the waste container, at a rate of once per day or once per batch, whichever is less frequent? Record date of observation and any issues or concerns in the comment section.	N/A	MP-TRUW-8.2, C1-3 and C3-4a	This SPM checklist is for RTR/Update only.
(16) Did personnel having current qualifications perform all RTR examinations?	N/A	MP-TRUW-8.1, Appendix F	This SPM checklist is for RTR/Update only.
(17) Verify the correct procedure and revision number were used for all containers in this batch.	Yes	MP-TRUW-8.2, C3-4a	
(18) Verify the audio and video checks were performed and are satisfactory.	N/A	MP-TRUW-8.2, C3-4a	This SPM checklist is for RTR/Update only.
(19) Verify that there are 20 or fewer containers in the batch.	N/A	MP-TRUW-8.2, C1-3	This SPM checklist is for RTR/Update only.
(20) Does the data for all containers within this batch meet the review, validation, and verification requirements? · Are proper units (e.g. Liters or pounds) and significant figure used? · Is the BDR complete (all pages identified in the BDR and numbered accordingly)? - RTR Batch Coversheet - Table of Contents (manual review only) - RTR Analysis reports - Replicate Scan - Replicate Comparison - Independent Observation - Form-1412, ITR checklist - Associated NCRs - Form, 1491, Batch Data Report Supplemental Comment Form, as applicable - Audio/Video Recording References	N/A	MP-TRUW-8.2, C3 10b(2)	This SPM checklist is for RTR/Update only.
(21) Review all NCR(s) (open and closed). Can the batch be approved?	Yes	MP-TRUW-8.2, C3-13	
(22) Is all data associated with this BDR acceptable for signature release?	Yes	MP-TRUW-8.2, C3 10b(2)	

Batch Id RTR13-00324 **Open Date** 15-DEC-13 **Close Date** 16-DEC-13

Esignature History

Esig Approval ID	User ID	Esig Date	Approval Level	Comments
2719652	DMARQUARDT	20-MAR-14	SPM	Reviewed and validated. Approve.
2719622	DLEE	20-MAR-14	ITR	Promote to SPM.

DIVIDER

PAGE

AMWTP
Advanced Mixed Waste Treatment Project

AMWTP

Batch Report Coversheet

Date: 11-Sep-2014

Time: 07:31

Batch Type Real Time Radiography
Batch Report No. RTR14-00018
Batch Id RTR14-00018
Open Date 07-FEB-14 11:14:37
Close Date 08-FEB-14 13:57:39
Batch Status AP
Test Facility Idaho AMWTP
Equipment Id Z-213-106 RTR Station Right (213-106)

Container Id	IDC	Analysis Id	Date Examined	QC Type	Analysis Status	Operator
10341581	RF-440	0000094707	07-FEB-14 11:14:37	Original	P	DENISE LEE
10326752	RF-337	0000094709	07-FEB-14 11:51:47	Original	P	JACE DUKE
10330364	RF-960	0000094710	07-FEB-14 12:09:44	Original	P	DANNY GREEN
10333518	RF-002	0000094711	07-FEB-14 12:25:53	Original	P	DANNY GREEN
10334056	RF-090	0000094713	07-FEB-14 13:00:00	Original	P	JACE DUKE
10330364	RF-960	0000094715	07-FEB-14 13:26:09	Replicate / Duplicate	P	AARON ATWELL
10333515	RF-002	0000094717	07-FEB-14 14:04:59	Original	P	AARON ATWELL
10330378	RF-960	0000094720	07-FEB-14 14:26:54	Original	P	JACE DUKE
10329047	UN-00B	0000094721	07-FEB-14 14:46:11	Original	P	AARON ATWELL
10328833	RF-330	0000094722	07-FEB-14 16:02:28	Original	P	JACE DUKE
10358127	RF-376	0000094727	07-FEB-14 16:38:21	Original	P	DENISE LEE
10341363	RF-960	0000094729	07-FEB-14 17:07:51	Original	P	JACE DUKE
10244374	UN-00B	0000094730	07-FEB-14 17:29:15	Original	P	AARON ATWELL
10167918	RF-002	0000094732	07-FEB-14 17:50:28	Original	P	AARON ATWELL
10229803	RF-480	0000094733	08-FEB-14 10:28:33	Original	P	DENISE LEE
10330235	RF-960	0000094736	08-FEB-14 10:41:58	Original	P	JACE DUKE
10255797	RF-330	0000094737	08-FEB-14 11:02:56	Original	P	AARON ATWELL
10335408	RF-480	0000094739	08-FEB-14 11:26:12	Original	P	JACE DUKE
10255797	RF-330	0000094741	08-FEB-14 11:42:16	RTR OIO	P	KENT KEARN
10087582	RF-337	0000094743	08-FEB-14 12:29:19	Original	P	AARON ATWELL
10316810	RF-750	0000094745	08-FEB-14 13:33:01	Original	P	KENT KEARN
10174589	RF-970	0000094747	08-FEB-14 13:56:39	Original	P	KENT KEARN

INFORMATION ONLY

**********Batch Comments**********

Written By	Date	Comment
CHINKLE	11-FEB-14 05:48:16	11-FEB-14 CHINKLE AKE This batch is returned for rework. AK does not concur with the recommended IDC change for containers 10341363, 10335408, 10334056, 10330378, 10330235, 10328833, 10326752 and 10229803. CHD 2/11/14
JDUKE	11-FEB-14 13:27:33	AK rework complete
CHINKLE	11-FEB-14 14:36:16	11-FEB-14 CHINKLE AKE This batch is returned for rework. AK does not concur with the recommended IDC change for containers 10341363, 10335408, 10334056, 10330378, 10330235, 10328833, 10326752 and 10229803. CHD 2/11/14 11-FEB-14 CHINKLE AKE Batch is promoted. chd 02/11/14
CSIMMONS	16-FEB-14 13:54:24	This batch was validated to MP-TRUW-8.8.
CSIMMONS	16-FEB-14 13:54:25	Container 10358127: Per review of the audio/video recording it appears that the waste in this container is predominantly plastic in the form of Ful-Flo filters (filter with grooves or cross hatched weave). The remaining waste weight % should be corrected to 100% Plastic (Waste Materials). The Results Comment should be updated to reflect this waste. Please review and make changes as needed.
CSIMMONS	16-FEB-14 13:54:25	Container 10229803: Per review of the audio/video recording it appears that there is some lead sheeting in the waste. There should be an entry in waste parameters for 50 lbs of lead sheeting. The Lead question should be answered "Yes Acceptable" for the sheeting. The entry for Oil-Dri should be removed and re-entered as 200 pints. Please review and make changes as needed.
CSIMMONS	16-FEB-14 13:54:25	Container 10341581: The IDC isn't populating on the Manual Batch Report Cover Sheet. Please rework to attempt to get the IDC to populate.
CSIMMONS	16-FEB-14 13:54:25	Sent batch to SPM level.
DLEE	16-FEB-14 16:38:42	Rework completed
CSIMMONS	16-FEB-14 17:03:04	Promoted batch to SPM level.
CSIMMONS	16-FEB-14 17:03:04	Reviewed rework: It appears to be complete and correct.
DMARQUARDT	17-FEB-14 11:02:00	Promote.
DMARQUARDT	17-FEB-14 11:02:01	Reviewed and validated. Approve.

**********Batch E-Signature History**********

Approval ID	User ID	Signature Date	Comment
2692465	JDUKE	11-FEB-2014 13:27:33	AK rework complete
2696348	CSIMMONS	16-FEB-2014 13:54:25	Sent batch to SPM level.
2696461	DLEE	16-FEB-2014 16:38:42	Rework completed
2696484	CSIMMONS	16-FEB-2014 17:03:04	Promoted batch to SPM level.
2697603	DMARQUARDT	17-FEB-2014 11:02:01	Reviewed and validated. Approve.

***** End of Batch Report Coversheet Report *****

AMWTP
Advanced Mixed Waste Treatment Project

AMWTP

Non-Conformance Report

Date: 11-Sep-2014
Time: 07:31

*****Batch NCR(s)*****

Batch Type	RTR	Batch ID	RTR14-00018

Trackwise Number	Status	Opened Date	Closed Date

*****Container NCR(s)*****

Container ID *or related Batch ID*	Trackwise Number	Status	Opened Date	Closed Date
10167918	57085	CLOSED	14-NOV-10	17-MAR-14
10229803	83668	OPEN	08-FEB-14	
10229803	83669	OPEN	08-FEB-14	
10229803	83670	OPEN	08-FEB-14	
10255797	27514	CLOSED	09-MAY-07	17-MAR-14
10330364	83657	OPEN	07-FEB-14	
10330378	83662	CLOSED	07-FEB-14	29-MAY-14
10333518	83658	CLOSED	07-FEB-14	21-APR-14
10334056	83660	OPEN	07-FEB-14	
10341581	83654	CLOSED	07-FEB-14	17-APR-14
10358127	7609	CLOSED	05-JUL-04	17-MAR-14
10358127	83664	CLOSED	07-FEB-14	17-APR-14
10087582	85940	OPEN	14-MAY-14	

*****End of Non-Conformance Report*****

Batch Id RTR14-00018 **Open Date** 07-FEB-14 **Close Date** 08-FEB-14

Reviewer CRAIG SIMMONS **Approval Level** Independent Technical Reviewer

Approval Date 16-FEB-14 **Review Iteration** 1

Question Text	Answer	Requirement	Comment
1. Is the Batch Data Report (BDR) and Quality Assurance (QA) documentation complete with the following: o Real-Time Radiography (RTR) Batch Coversheet o Table of Contents (manual review only) o RTR Analysis reports o Replicate Scan o Replicate Comparison o Independent Observation o ITR checklist (Form-1412, manual review only) o Form-1491, Batch Data Report Supplemental Comment Form (manual review only) o Associated NCRs (referenced in Waste Tracking System [WTS]) o Audio/Video Recording References?	Yes		
2. Are there 20 containers or less in the batch?	Yes		
3. Was the image quality indicator (IQI) satisfactory?	Yes		
4. Does every container in the batch reference an audio/video recording?	Yes		
5. Is there a completed radiography data analysis for each container in the batch?	Yes		
6. Was each RTR Operator qualified at the time of the radiography event?	Yes		
7. Was the data generated in a technically correct manner using the correct revision of INST-OI-12, Real-Time Radiography Operations (Drum)?	Yes		
8. Was the correct procedure and revision documented on all analysis reports?	Yes		
9. Has the E-signature History review been performed?	Yes		
10. Does the RTR operator confirm that the physical form matched the waste stream description and waste matrix code?	Yes		
11. Does the packaging weight plus the net weight equal the gross weight of the container in the estimated waste material parameters?	Yes		
12. Were all entries into the waste material items section assigned to the correct waste material parameters?	No		See batch comments.
13. Has the description of rigid liners and layers of confinement been properly documented, as applicable?	Yes		
14. Was the presence or absence of prohibited items properly documented?	Yes		
15. If prohibited items were identified, have appropriate nonconformance reports (NCRs) been generated?	Yes		
16. Were the containers examined between October and April in compliance with the preheat requirements?	Yes		
17. Were all proper units and significant figures used for all reported volumes/weights?	Yes		
18. Was there a valid replicate scan performed (at least one container per day, or once per testing batch, whichever is less frequent)? o Record the container number, the replicate observation date in the comment section of this checklist. o Record any issues or concerns in the batch comment section.	Yes		The replicate scan was performed on container 10330364 on 02/07/14. There were minor differences between the exams; these differences don't affect the DQOs or disposition of the drum.
19. Was there a valid Operator Independent Observation (OIO) (not the replicate) performed (at least one container per day, or once per testing batch, whichever is less	Yes		The OIO scan was performed on container 10255797 on 02/08/14 There were minor differences between the exams; these differences don't affect the

Batch Id RTR14-00018 **Open Date** 07-FEB-14 **Close Date** 08-FEB-14

Reviewer CRAIG SIMMONS **Approval Level** Independent Technical Reviewer
Approval Date 16-FEB-14 **Review Iteration** 1

Question Text	Answer	Requirement	Comment
frequent)? o Record the container number and the OIO date in the comment section of this checklist. o Record any issues or concerns in the batch comment section.			DQOs or disposition of the drum.
20. Were any significant differences identified that would affect the original disposition of the replicate and OIO, or affect data quality objectives (DQOs)? If so, ensure an NCR was generated and WTS flagged.	No		
21. Were the RTR quality assurance objectives (QAOs) met? o Precision o Accuracy o Completeness o Comparability	Yes		
22. Were any NCRs generated for containers containing prohibited items, or any non-conforming conditions that failed to meet DQOs or QAOs? o If so, include the NCRs, as appropriate, in the BDR.	Yes		
23. Were the rework requirements clearly identified in WTS or on the BDR?	Yes		See batch comments.

Batch Id RTR14-00018 **Open Date** 07-FEB-14 **Close Date** 08-FEB-14

Reviewer CRAIG SIMMONS **Approval Level** Independent Technical Reviewer
Approval Date 16-FEB-14 **Review Iteration** 2

Question Text	Answer	Requirement	Comment
1. Is the Batch Data Report (BDR) and Quality Assurance (QA) documentation complete with the following: o Real-Time Radiography (RTR) Batch Coversheet o Table of Contents (manual review only) o RTR Analysis reports o Replicate Scan o Replicate Comparison o Independent Observation o ITR checklist (Form-1412, manual review only) o Form-1491, Batch Data Report Supplemental Comment Form (manual review only) o Associated NCRs (referenced in Waste Tracking System [WTS]) o Audio/Video Recording References?	Yes		
2. Are there 20 containers or less in the batch?	Yes		
3. Was the image quality indicator (IQI) satisfactory?	Yes		
4. Does every container in the batch reference an audio/video recording?	Yes		
5. Is there a completed radiography data analysis for each container in the batch?	Yes		
6. Was each RTR Operator qualified at the time of the radiography event?	Yes		
7. Was the data generated in a technically correct manner using the correct revision of INST-OI-12, Real-Time Radiography Operations (Drum)?	Yes		
8. Was the correct procedure and revision documented on all analysis reports?	Yes		
9. Has the E-signature History review been performed?	Yes		
10. Does the RTR operator confirm that the physical form matched the waste stream description and waste matrix code?	Yes		
11. Does the packaging weight plus the net weight equal the gross weight of the container in the estimated waste material parameters?	Yes		
12. Were all entries into the waste material items section assigned to the correct waste material parameters?	Yes		
13. Has the description of rigid liners and layers of confinement been properly documented, as applicable?	Yes		
14. Was the presence or absence of prohibited items properly documented?	Yes		
15. If prohibited items were identified, have appropriate nonconformance reports (NCRs) been generated?	Yes		
16. Were the containers examined between October and April in compliance with the preheat requirements?	Yes		
17. Were all proper units and significant figures used for all reported volumes/weights?	Yes		
18. Was there a valid replicate scan performed (at least one container per day, or once per testing batch, whichever is less frequent)? o Record the container number, the replicate observation date in the comment section of this checklist. o Record any issues or concerns in the batch comment section.	Yes		The replicate scan was performed on container 10330364 on 02/07/14. There were minor differences between the exams; these differences don't affect the DQOs or disposition of the drum.
19. Was there a valid Operator Independent Observation (OIO) (not the replicate) performed (at least one container per day, or once per testing batch, whichever is less	Yes		The OIO scan was performed on container 10255797 on 02/08/14 There were minor differences between the exams; these differences don't affect the

Batch Id RTR14-00018 **Open Date** 07-FEB-14 **Close Date** 08-FEB-14

Reviewer CRAIG SIMMONS **Approval Level** Independent Technical Reviewer
Approval Date 16-FEB-14 **Review Iteration** 2

Question Text	Answer	Requirement	Comment
frequent)? o Record the container number and the OIO date in the comment section of this checklist. o Record any issues or concerns in the batch comment section.			DQOs or disposition of the drum.
20. Were any significant differences identified that would affect the original disposition of the replicate and OIO, or affect data quality objectives (DQOs)? If so, ensure an NCR was generated and WTS flagged.	No		
21. Were the RTR quality assurance objectives (QAOs) met? o Precision o Accuracy o Completeness o Comparability	Yes		
22. Were any NCRs generated for containers containing prohibited items, or any non-conforming conditions that failed to meet DQOs or QAOs? o If so, include the NCRs, as appropriate, in the BDR.	Yes		
23. Were the rework requirements clearly identified in WTS or on the BDR?	Yes		See batch comments.

Batch Id RTR14-00018 **Open Date** 07-FEB-14 **Close Date** 08-FEB-14

Reviewer DAVE MARQUARDT **Approval Level** SPM Data Validation
Approval Date 17-FEB-14 **Review Iteration** 1

Question Text	Answer	Requirement	Comment
(1) Has the batch received a Data Generation Level Independent Technical Review?	Yes	MP-TRUW-8.2, C3-10b(1)	
(2) Is the Independent Technical Review checklist complete?	Yes	MP-TRUW-8.2, C3-10b(1)	
(3) When identified, were polychlorinated biphenyls (PCBs), mercury, lead, or other hazardous contaminants consistent with the waste stream acceptable knowledge (AK) Summary Report(s) and/or AK documentation?	Yes	MP-TRUW-8.2, C4-3	
(4) Are any ignitable, corrosive, or reactive wastes identified in this waste?	No	MP-TRUW-8.2, C4-3	
(5) Are the packaging configurations identified on the real-time radiography (RTR) consistent with the waste stream AK Summary Report(s) and/or AK documentation?	Yes	MP-TRUW-8.2, C4-3	
(6) Do the containers in this batch contain typical waste items consistent with waste stream AK Summary Report(s) and/or AK documentation?	Yes	MP-TRUW-8.2, C4-3	
(7) Are the Waste Matrix Codes (WMCs) and physical form descriptions consistent with AK?	Yes	MP-TRUW-8.2, C4-3	
(8) Have all AK discrepancies been resolved and have all AK Resolution checklists been approved? Reference all waste stream AK documentation used in review of this data package.	Yes	MP-TRUW-8.2, C4-3	RPT-TRUW-05. RPT-TRUW-06. RPT-TRUW-12. RPT-TRUW-56. All drums except 10358127, 10167918, 10255797, 10087582, 10316810 and 10174589 received an IDC at the time of RTR. Previously they all had no historical information.
(9) Have all applicable Quality Assurance Objectives (QAOs) been met, including precision, accuracy, completeness, and comparability, by using the appropriate acceptance criteria for each as specified in MP-TRUW-8.2, Quality Assurance Project Plan Section C3-4? Precision ¿ Verified prior to use by tuning precisely enough to demonstrate compliance with QAOs through viewing an image test pattern, as evidenced by a satisfactory Image Quality Indicator (IQI). ¿ Have discrepancies, if any, between radiography operators been reconciled? Accuracy ¿ Use of a target to tune the image for maximum sharpness as evidenced by a satisfactory IQI and by requiring operators to successfully identify 100% of the required items in a training container during initial and subsequent qualifications. Completeness ¿ An audio/videotape (or equivalent media) of the radiography examination and a validated radiography data form will be obtained for 100% of the retrievably stored waste container in the program for all waste containers subject to radiography. Comparability ¿ Use of standardized radiography procedures and operator qualifications.	Yes	MP-TRUW-8.2, C3-4a	
(10) Do the waste container contents match the WMC, waste stream description and identify the absence of prohibited items?	Yes	MP-TRUW-8.2, C1-3 and B3-11	
(11) If residual liquids exist in the container, is an estimate of quantity given?	Yes	MP-TRUW-8.2, C1-3	
(12) Do the individual container reports contain the (a) IDC, (b) Waste Matrix Code, (c) audio/video recording reference, (d) gross container weight, (e) waste material parameter weights, and (f) signature and date of examination?	Yes	MP-TRUW-8.2, C1-3 and C3-11a	

Batch Id RTR14-00018 **Open Date** 07-FEB-14 **Close Date** 08-FEB-14

Reviewer DAVE MARQUARDT **Approval Level** SPM Data Validation

Approval Date 17-FEB-14 **Review Iteration** 1

Question Text	Answer	Requirement	Comment
(13) Have the IDC, WMC, and/or waste stream for all containers in the batch remained the same as originally assigned by the historical designation? If not, note the container number in the comment field and notify the Acceptable Knowledge Expert (AKE) if NCR does not exist on the WMC and IDC change.	No	MP-TRUW-8.2, C1-3 and C3-4a	All drums except 10358127, 10167918, 10255797, 10087582, 10316810 and 10174589 received an IDC at the time of RTR. Previously they all had no historical information.
(14) Was a replicate scan performed by an independent operator on at least one container per day or once per testing batch, whichever is less frequent, by a qualified radiography operator that was not involved in the original scan of the waste container?	Yes	MP-TRUW-8.2, B1-3, C3-4a, and C3-10b(1)	
(15) Has an independent observation of one scan (not the replicate) been performed by a qualified operator that was not involved in the original scan of the waste container, at a rate of once per day or once per batch, whichever is less frequent? Record date of observation and any issues or concerns in the comment section.	Yes	MP-TRUW-8.2, C1-3 and C3-4a	The OIO scan was performed on container 10255797 on 02/08/14. No issues.
(16) Did personnel having current qualifications perform all RTR examinations?	Yes	MP-TRUW-8.1, Appendix F	
(17) Verify the correct procedure and revision number were used for all containers in this batch.	Yes	MP-TRUW-8.2, C3-4a	
(18) Verify the audio and video checks were performed and are satisfactory.	Yes	MP-TRUW-8.2, C3-4a	
(19) Verify that there are 20 or fewer containers in the batch.	Yes	MP-TRUW-8.2, C1-3	
(20) Does the data for all containers within this batch meet the review, validation, and verification requirements? · Are proper units (e.g. Liters or pounds) and significant figure used? · Is the BDR complete (all pages identified in the BDR and numbered accordingly)? - RTR Batch Coversheet - Table of Contents (manual review only) - RTR Analysis reports - Replicate Scan - Replicate Comparison - Independent Observation - Form-1412, ITR checklist - Associated NCRs - Form, 1491, Batch Data Report Supplemental Comment Form, as applicable - Audio/Video Recording References	Yes	MP-TRUW-8.2, C3 10b(2)	
(21) Review all NCR(s) (open and closed). Can the batch be approved?	Yes	MP-TRUW-8.2, C3-13	
(22) Is all data associated with this BDR acceptable for signature release?	Yes	MP-TRUW-8.2, C3 10b(2)	

Batch Id RTR14-00018 **Open Date** 07-FEB-14 **Close Date** 08-FEB-14

Esignature History

Esig Approval ID	User ID	Esig Date	Approval Level	Comments
2697603	DMARQUARDT	17-FEB-14	SPM	Reviewed and validated. Approve.
2696484	CSIMMONS	16-FEB-14	ITR	Promoted batch to SPM level.
2696348	CSIMMONS	16-FEB-14	ITR	Sent batch to SPM level.

AMWTP
Advanced Mixed Waste Treatment Project

AMWTP

RTR Analysis Report

Date: 11-Sep-2014
Time: 07:32

Batch Id RTR14-00018 **Container Id** 10341581 **Analysis Id** 0000094707

Container Type C drum, 83 Gallon **Analysis Status** Pass

RTR Date 07-FEB-2014 11:14 **Gross Weight** 240.345 **Lbs.** **Net Weight** 96.345 **Lbs**

Equipment Z-213-106 **Waste Matrix Code** S5122 **IDC** RF-440 Glass

Recording Id 2RTR14-00011 **Procedure Id** INST-OI-12 **Revision** 52 **Approval Level** SPM

Is Test Pattern Resolution Ok? Yes **Start Side** A **Replicate** No **OIO** No

Audio Visual Ok? Yes **Operator** DGREEN

Result Comment Waste consists of glass vials & labware.
AK concurs with the recommended IDC, RF-440, for container 10341581. No AKR or NCR is necessary. CHD 2/11/14

Package

IDC Correct Yes **Recommended IDC** **Summary Category** S5000

Idc Change Reason

Rigid Liner Present? No **LinerType** NO LINER

Liner Punctured? N/A **Sharp Objects?** No

Liner Lid Present? No **Sharp Objects Are Protected?** Yes

Liner Lid Deformed? N/A **Layers Of Confinement** 4

Fill Factor 90

Bag Closure Method Twisted and Taped

Liquids

Liquid Present? No **Internal Container with Liquid** No

Internal Container with Liquid 0 pints **LA Candidate** No

Liquid Between Liner & Drum 0 pints **Containerized Liquid**

Total Liquid Amount 0 pints **Containerized Liquid Amt** 0 pints

Other Liquids 0 pints **Comment**

Prohibited Liquids Present No **Comment**

Contents-Drum or Box

	Value	Comment		Value	Comment
Lead?	Yes, Rejected	lead taped vials - shielding	**Mercury Present?**	No	
Wet Cell Batteries?	No		**Explosives?**	No	
Prohibited Compressed Gases?	No		**PCBs Present?**	No	
Aerosol Cans?	No		**PCB Mass (lbs)**	0	
Non-Mixed Hazardous Waste Present?	No		**Sealed Containers Over 4L?**	No	

Non-Radionuclide Pyrophoric Materials Present? No

Waste exhibiting the characteristics of Ignitability, Corrosivity or Reactivity Present? No

Wastes Incompatible with backfill, seal and panel closure materials, container and packaging materials,shipping container or other wastes? No

Impenetrable Dense Objects? No

Waste Material Items

Packaging Materials

Material Item	Quantity	Unit	Unit Wt(lbs)	Item Wt(lbs)
Drum plastic bag	2.000	EACH	1.000	2.000
55-GAL DRUM (17c)	1.000	EACH	59.000	59.000

Waste Items byWeight

Material Item	Quantity	Unit	Unit Wt(lbs)	Item Wt(lbs)
cardboard cartons	1.000	EACH	10.000	10.000
lead taped vials	1.000	EACH	12.000	12.000
Cardboard liner	1.000	EACH	4.000	4.000
Plastic bag for waste	2.000	EACH	0.250	0.500

Waste Items by Volume

Material Item	Quantity	Unit	Unit Wt(lbs)	Item Wt(lbs)
Oil-Dri (Inside 55 gal drum)	40.000	PINTS	0.420	16.800

Batch Id RTR14-00018 **Container Id** 10341581 **Analysis Id** 0000094707

Waste Parameters

Waste Parameter	Remaining Weight %	Actual Weight Lbs
Iron-based Metals/Alloys	0.000	0.000
Aluminum-based Metals/Alloys	0.000	0.000
Other metals	0.000	4.800
Other Inorganic Materials	100.000	77.045
Cellulosics	0.000	14.000
Rubber	0.000	0.000
Plastic (Waste Materials)	0.000	0.500
Inorganic matrix	0.000	0.000
Organic matrix	0.000	0.000
Soils/gravel	0.000	0.000
Steel (packaging materials)	0.000	142.000
Plastic (packaging materials)	0.000	2.000
Cellulosics Packaging	0.000	0.000

Analysis Esignature History

Esig Approval Id	User Id	Esignature Date	Comment
2696457	DLEE	16-FEB-2014 16:33	E-signed drum 10341581 to populate the IDC on the BDR.
2692163	CHINKLE	11-FEB-2014 05:48	This batch is returned for rework. AK does not concur with the recommended IDC change for containers 10341363, 10335408, 10334056, 10330378, 10330235, 10328833, 10326752 and 10229803. CHD 2/11/14
2689651	DGREEN	07-FEB-2014 11:14	

Batch Id RTR14-00018 **Container Id** 10326752 **Analysis Id** 0000094709

Container Type C drum, 83 Gallon **Analysis Status** Pass

RTR Date 07-FEB-2014 11:51 **Gross Weight** 183.015 Lbs. **Net Weight** 39.015 Lbs

Equipment Z-213-106 **Waste Matrix Code** S5300 **IDC** RF-337 Plastics, Teflon, Washables, PVC

Recording Id 2RTR14-00011 **Procedure Id** INST-OI-12 **Revision** 52 **Approval Level** SPM

Is Test Pattern Resolution Ok? Yes **Start Side** A **Replicate** No **OIO** No

Audio Visual Ok? Yes **Operator** DGREEN

Result Comment Waste consists primarily of plastic sheeting.
AK does not concur with the recommended IDC UN-00B for container 10326752 because waste is RF debris. Instead, AK recommends an IDC of RF-337. CHD 2/11/14
AK rework recommended IDC RF-337 per AK. JED 02/11/14
AK concurs with the recommended IDC, RF-337, for container 10326752. No AKR or NCR is necessary. CHD 02/11/14

Package

IDC Correct Yes **Recommended IDC** RF-337 **Summary Category** S5000

Idc Change Reason Per AK

Rigid Liner Present? No **LinerType** NO LINER

Liner Punctured? N/A **Sharp Objects?** No

Liner Lid Present? No **Sharp Objects Are Protected?** Yes

Liner Lid Deformed? N/A **Layers Of Confinement** 3

Fill Factor 50

Bag Closure Method Twisted and Taped

Liquids

Liquid Present? No **Internal Container with Liquid** No

Internal Container with Liquid 0 pints **LA Candidate** No

Liquid Between Liner & Drum 0 pints **Containerized Liquid**

Total Liquid Amount 0 pints **Containerized Liquid Amt** 0 pints

Other Liquids 0 pints **Comment**

Prohibited Liquids Present No **Comment**

Contents-Drum or Box

	Value	Comment		Value	Comment
Lead?	No		**Mercury Present?**	No	
Wet Cell Batteries?	No		**Explosives?**	No	
Prohibited Compressed Gases?	No		**PCBs Present?**	No	
Aerosol Cans?	No		**PCB Mass (lbs)**	0	
Non-Mixed Hazardous Waste Present?	No		**Sealed Containers Over 4L?**	No	

Non-Radionuclide Pyrophoric Materials Present? No

Waste exhibiting the characteristics of Ignitability, Corrosivity or Reactivity Present? No

Wastes Incompatible with backfill, seal and panel closure materials, container and packaging materials,shipping container or other wastes? No

Impenetrable Dense Objects? No

Waste Material Items

Packaging Materials

Material Item	Quantity	Unit	Unit Wt(lbs)	Item Wt(lbs)
Drum plastic bag	2.000	EACH	1.000	2.000
55-GAL DRUM (17c)	1.000	EACH	59.000	59.000

Waste Items byWeight

Material Item	Quantity	Unit	Unit Wt(lbs)	Item Wt(lbs)
cardboard paper / rags	1.000	EACH	5.000	5.000
graphite pieces	1.000	EACH	5.000	5.000
Plastic bag for waste	1.000	EACH	0.250	0.250

Batch Id RTR14-00018 **Container Id** 10326752 **Analysis Id** 0000094709

Waste Items by Volume

Material Item	Quantity	Unit	Unit Wt(lbs)	Item Wt(lbs)
Oil-Dri (Inside 55 gal drum)	16.000	PINTS	0.420	6.720

Waste Parameters

Waste Parameter	Remaining Weight %	Actual Weight Lbs
Iron-based Metals/Alloys	0.000	0.000
Aluminum-based Metals/Alloys	0.000	0.000
Other metals	0.000	0.000
Other Inorganic Materials	0.000	11.720
Cellulosics	0.000	5.000
Rubber	0.000	0.000
Plastic (Waste Materials)	100.000	22.295
Inorganic matrix	0.000	0.000
Organic matrix	0.000	0.000
Soils/gravel	0.000	0.000
Steel (packaging materials)	0.000	142.000
Plastic (packaging materials)	0.000	2.000
Cellulosics Packaging	0.000	0.000

Analysis Esignature History

Esig Approval Id	User Id	Esignature Date	Comment
2692558	CHINKLE	11-FEB-2014 14:36	Batch is promoted. chd 02/11/14
2692455	JDUKE	11-FEB-2014 13:20	ak rework
2692171	CHINKLE	11-FEB-2014 05:48	This batch is returned for rework. AK does not concur with the recommended IDC change for containers 10341363, 10335408, 10334056, 10330378, 10330235, 10328833, 10326752 and 10229803. CHD 2/11/14
2689665	DGREEN	07-FEB-2014 11:51	

Batch Id RTR14-00018 **Container Id** 10330364 **Analysis Id** 0000094710

Container Type C drum, 83 Gallon **Analysis Status** Pass

RTR Date 07-FEB-2014 12:09 **Gross Weight** 632.835 **Lbs.** **Net Weight** 488.835 **Lbs**

Equipment Z-213-106 **Waste Matrix Code** S5490 **IDC** RF-960 Concrete, Asphalt, etc.

Recording Id 2RTR14-00011 **Procedure Id** INST-OI-12 **Revision** 52 **Approval Level** SPM

Is Test Pattern Resolution Ok? Yes **Start Side** A **Replicate** No **OIO** No

Audio Visual Ok? Yes **Operator** DGREEN

Result Comment Waste consists of concrete chunks.

Package

IDC Correct Yes **Recommended IDC** **Summary Category** S5000

Idc Change Reason

Rigid Liner Present? No **LinerType** NO LINER

Liner Punctured? N/A **Sharp Objects?** No

Liner Lid Present? No **Sharp Objects Are Protected?** Yes

Liner Lid Deformed? N/A **Layers Of Confinement** 2

Fill Factor 90

Bag Closure Method Twisted and Taped

Liquids

Liquid Present? No **Internal Container with Liquid** No

Internal Container with Liquid 0 pints **LA Candidate** No

Liquid Between Liner & Drum 0 pints **Containerized Liquid**

Total Liquid Amount 0 pints **Containerized Liquid Amt** 0 pints

Other Liquids 0 pints **Comment**

Prohibited Liquids Present No **Comment**

Contents-Drum or Box

	Value	Comment		Value	Comment
Lead?	No		**Mercury Present?**	No	
Wet Cell Batteries?	No		**Explosives?**	No	
Prohibited Compressed Gases?	No		**PCBs Present?**	No	
Aerosol Cans?	No		**PCB Mass (lbs)**	0	
Non-Mixed Hazardous Waste Present?	No		**Sealed Containers Over 4L?**	No	

Non-Radionuclide Pyrophoric Materials Present? No

Waste exhibiting the characteristics of Ignitability, Corrosivity or Reactivity Present? No

Wastes Incompatible with backfill, seal and panel closure materials, container and packaging materials,shipping container or other wastes? No

Impenetrable Dense Objects? Yes - Unacceptable — An area 12-14" x 16" near the center of the drum is impenetrable - appears to be due to pulverized concrete.

Waste Material Items

Packaging Materials

Material Item	Quantity	Unit	Unit Wt(lbs)	Item Wt(lbs)
Drum plastic bag	2.000	EACH	1.000	2.000
55-GAL DRUM (17c)	1.000	EACH	59.000	59.000

Waste Items byWeight

Material Item	Quantity	Unit	Unit Wt(lbs)	Item Wt(lbs)
Cardboard liner	1.000	EACH	4.000	4.000

Waste Items by Volume

Material Item	Quantity	Unit	Unit Wt(lbs)	Item Wt(lbs)
Vermiculite (95 gm/liter) .125 lb/pint	20.000	PINTS	0.125	2.500

Batch Id RTR14-00018 **Container Id** 10330364 **Analysis Id** 0000094710

Waste Parameters

Waste Parameter	Remaining Weight %	Actual Weight Lbs
Iron-based Metals/Alloys	0.000	0.000
Aluminum-based Metals/Alloys	0.000	0.000
Other metals	0.000	0.000
Other Inorganic Materials	100.000	484.835
Cellulosics	0.000	4.000
Rubber	0.000	0.000
Plastic (Waste Materials)	0.000	0.000
Inorganic matrix	0.000	0.000
Organic matrix	0.000	0.000
Soils/gravel	0.000	0.000
Steel (packaging materials)	0.000	142.000
Plastic (packaging materials)	0.000	2.000
Cellulosics Packaging	0.000	0.000

Analysis Esignature History

Esig Approval Id	User Id	Esignature Date	Comment
2689674	DGREEN	07-FEB-2014 12:09	

Batch Id RTR14-00018 **Container Id** 10333518 **Analysis Id** 0000094711

Container Type C drum, 83 Gallon **Analysis Status** Pass

RTR Date 07-FEB-2014 12:25 **Gross Weight** 513.765 **Lbs.** **Net Weight** 369.765 **Lbs.**

Equipment Z-213-106 **Waste Matrix Code** S3121 **IDC** RF-002 Second Stage Sludge

Recording Id 2RTR14-00011 **Procedure Id** INST-OI-12 **Revision** 52 **Approval Level** SPM

Is Test Pattern Resolution Ok? Yes **Start Side** A **Replicate** No **OIO** No

Audio Visual Ok? Yes **Operator** DGREEN

Result Comment Waste consists of sludge.

Package

IDC Correct Yes **Recommended IDC** **Summary Category** S3000

Idc Change Reason

Rigid Liner Present? No **LinerType** NO LINER

Liner Punctured? N/A **Sharp Objects?** No

Liner Lid Present? No **Sharp Objects Are Protected?** Yes

Liner Lid Deformed? N/A **Layers Of Confinement** 2

Fill Factor 70

Bag Closure Method Twisted and Taped

Liquids

Liquid Present? Yes **Internal Container with Liquid** No

Internal Container with Liquid 0 pints **LA Candidate** No

Liquid Between Liner & Drum 0 pints **Containerized Liquid**

Total Liquid Amount 12 pints **Containerized Liquid Amt** 0 pints

Other Liquids 12 pints **Comment** 8 pts. between the 55 & the 83. 4 pts. in the bottom of the sludge.

Prohibited Liquids Present Yes **Comment** > 1%

Contents-Drum or Box

	Value	Comment		Value	Comment
Lead?	No		**Mercury Present?**	No	
Wet Cell Batteries?	No		**Explosives?**	No	
Prohibited Compressed Gases?	No		**PCBs Present?**	No	
Aerosol Cans?	No		**PCB Mass (lbs)**	0	
Non-Mixed Hazardous Waste Present?	No		**Sealed Containers Over 4L?**	No	

Non-Radionuclide Pyrophoric Materials Present? No

Waste exhibiting the characteristics of Ignitability, Corrosivity or Reactivity Present? No

Wastes Incompatible with backfill, seal and panel closure materials, container and packaging materials,shipping container or other wastes? No

Impenetrable Dense Objects? No

Waste Material Items

Packaging Materials

Material Item	Quantity	Unit	Unit Wt(lbs)	Item Wt(lbs)
Drum plastic bag	2.000	EACH	1.000	2.000
55-GAL DRUM (17c)	1.000	EACH	59.000	59.000

Waste Items byWeight

Material Item	Quantity	Unit	Unit Wt(lbs)	Item Wt(lbs)

Waste Items by Volume

Material Item	Quantity	Unit	Unit Wt(lbs)	Item Wt(lbs)
Liquids for Inorganic Matrix	12.000	PINTS	1.000	12.000

Batch Id RTR14-00018 **Container Id** 10333518 **Analysis Id** 0000094711

Waste Parameters

Waste Parameter	Remaining Weight %	Actual Weight Lbs
Iron-based Metals/Alloys	0.000	0.000
Aluminum-based Metals/Alloys	0.000	0.000
Other metals	0.000	0.000
Other Inorganic Materials	0.000	0.000
Cellulosics	0.000	0.000
Rubber	0.000	0.000
Plastic (Waste Materials)	0.000	0.000
Inorganic matrix	100.000	369.765
Organic matrix	0.000	0.000
Soils/gravel	0.000	0.000
Steel (packaging materials)	0.000	142.000
Plastic (packaging materials)	0.000	2.000
Cellulosics Packaging	0.000	0.000

Analysis Esignature History

Esig Approval Id	User Id	Esignature Date	Comment
2689675	DGREEN	07-FEB-2014 12:25	

Batch Id RTR14-00018 **Container Id** 10334056 **Analysis Id** 0000094713

Container Type C drum, 83 Gallon **Analysis Status** Pass

RTR Date 07-FEB-2014 13:00 **Gross Weight** 522.585 **Lbs.** **Net Weight** 378.585 **Lbs**

Equipment Z-213-106 **Waste Matrix Code** S4200 **IDC** RF-090 Dirt

Recording Id 2RTR14-00011 **Procedure Id** INST-OI-12 **Revision** 52 **Approval Level** SPM

Is Test Pattern Resolution Ok? Yes **Start Side** A **Replicate** No **OIO** No

Audio Visual Ok? Yes **Operator** AATWELL

Result Comment Waste appears to be dirt / gravel.
AK does not concur with the recommended IDC UN-00C for container 10334056 because waste has RF traveler identified. Instead, AK recommends an IDC of RF-090. CHD 2/11/14
AK rework recommended IDC RF-090 per AK. JED 02/11/14
AK concurs with the recommended IDC, RF-090, for container 10334056. No AKR or NCR is necessary. CHD 02/11/14

Package

IDC Correct Yes **Recommended IDC** RF-090 **Summary Category** S4000

Idc Change Reason Per AK

Rigid Liner Present? No **LinerType** NO LINER

Liner Punctured? N/A **Sharp Objects?** No

Liner Lid Present? No **Sharp Objects Are Protected?** Yes

Liner Lid Deformed? N/A **Layers Of Confinement** 2

Fill Factor 65

Bag Closure Method Twisted and Taped

Liquids

Liquid Present? No **Internal Container with Liquid** No

Internal Container with Liquid 0 pints **LA Candidate** No

Liquid Between Liner & Drum 0 pints **Containerized Liquid**

Total Liquid Amount 0 pints **Containerized Liquid Amt** 0 pints

Other Liquids 0 pints **Comment**

Prohibited Liquids Present No **Comment**

Contents-Drum or Box

	Value	Comment		Value	Comment
Lead?	No		**Mercury Present?**	No	
Wet Cell Batteries?	No		**Explosives?**	No	
Prohibited Compressed Gases?	No		**PCBs Present?**	No	
Aerosol Cans?	No		**PCB Mass (lbs)**	0	
Non-Mixed Hazardous Waste Present?	No		**Sealed Containers Over 4L?**	No	

Non-Radionuclide Pyrophoric Materials Present? No

Waste exhibiting the characteristics of Ignitability, Corrosivity or Reactivity Present? No

Wastes Incompatible with backfill, seal and panel closure materials, container and packaging materials,shipping container or other wastes? No

Impenetrable Dense Objects? Yes - Unacceptable aprox 80% of the waste is impenetrable.

Waste Material Items

Packaging Materials

Material Item	Quantity	Unit	Unit Wt(lbs)	Item Wt(lbs)
Drum plastic bag	2.000	EACH	1.000	2.000
55-GAL DRUM (17c)	1.000	EACH	59.000	59.000

Waste Items byWeight

Material Item	Quantity	Unit	Unit Wt(lbs)	Item Wt(lbs)
Cardboard liner	1.000	EACH	4.000	4.000

Waste Items by Volume

Material Item	Quantity	Unit	Unit Wt(lbs)	Item Wt(lbs)

Batch Id RTR14-00018 **Container Id** 10334056 **Analysis Id** 0000094713

Waste Parameters

Waste Parameter	Remaining Weight %	Actual Weight Lbs
Iron-based Metals/Alloys	0.000	0.000
Aluminum-based Metals/Alloys	0.000	0.000
Other metals	0.000	0.000
Other Inorganic Materials	0.000	0.000
Cellulosics	0.000	4.000
Rubber	0.000	0.000
Plastic (Waste Materials)	0.000	0.000
Inorganic matrix	0.000	0.000
Organic matrix	0.000	0.000
Soils/gravel	100.000	374.585
Steel (packaging materials)	0.000	142.000
Plastic (packaging materials)	0.000	2.000
Cellulosics Packaging	0.000	0.000

Analysis Esignature History

Esig Approval Id	User Id	Esignature Date	Comment
2692554	CHINKLE	11-FEB-2014 14:36	Batch is promoted. chd 02/11/14
2692462	JDUKE	11-FEB-2014 13:24	AK rework
2692166	CHINKLE	11-FEB-2014 05:48	This batch is returned for rework. AK does not concur with the recommended IDC change for containers 10341363, 10335408, 10334056, 10330378, 10330235, 10328833, 10326752 and 10229803. CHD 2/11/14
2689688	AATWELL	07-FEB-2014 13:00	

Batch Id RTR14-00018 **Container Id** 10330364 **Analysis Id** 0000094715

Container Type C drum, 83 Gallon **Analysis Status** Pass

RTR Date 07-FEB-2014 13:26 **Gross Weight** 632.835 **Lbs.** **Net Weight** 488.835 **Lbs**

Equipment Z-213-106 **Waste Matrix Code** S5490 **IDC** RF-960 Concrete, Asphalt, etc.

Recording Id 2RTR14-00011 **Procedure Id** INST-OI-12 **Revision** 52 **Approval Level** SPM

Is Test Pattern Resolution Ok? Yes **Start Side** A **Replicate** Yes **OIO** No

Audio Visual Ok? Yes **Operator** AATWELL

Result Comment Waste appears to be construction rubble in the form of busted up concrete.

Package

IDC Correct Yes **Recommended IDC** **Summary Category** S5000

Idc Change Reason

Rigid Liner Present? No **LinerType** NO LINER

Liner Punctured? N/A **Sharp Objects?** No

Liner Lid Present? No **Sharp Objects Are Protected?** Yes

Liner Lid Deformed? N/A **Layers Of Confinement** 2

Fill Factor 95

Bag Closure Method Twisted and Taped

Liquids

Liquid Present? No **Internal Container with Liquid** No

Internal Container with Liquid 0 pints **LA Candidate** No

Liquid Between Liner & Drum 0 pints **Containerized Liquid**

Total Liquid Amount 0 pints **Containerized Liquid Amt** 0 pints

Other Liquids 0 pints **Comment**

Prohibited Liquids Present No **Comment**

Contents-Drum or Box

	Value	Comment		Value	Comment
Lead?	No		**Mercury Present?**	No	
Wet Cell Batteries?	No		**Explosives?**	No	
Prohibited Compressed Gases?	No		**PCBs Present?**	No	
Aerosol Cans?	No		**PCB Mass (lbs)**	0	
Non-Mixed Hazardous Waste Present?	No		**Sealed Containers Over 4L?**	No	

Non-Radionuclide Pyrophoric Materials Present? No

Waste exhibiting the characteristics of Ignitability, Corrosivity or Reactivity Present? No

Wastes Incompatible with backfill, seal and panel closure materials, container and packaging materials,shipping container or other wastes? No

Impenetrable Dense Objects? Yes - Unacceptable aprox 50% of the waste in this container is impenetrable

Waste Material Items

Packaging Materials

Material Item	Quantity	Unit	Unit Wt(lbs)	Item Wt(lbs)
Drum plastic bag	2.000	EACH	1.000	2.000
55-GAL DRUM (17c)	1.000	EACH	59.000	59.000

Waste Items byWeight

Material Item	Quantity	Unit	Unit Wt(lbs)	Item Wt(lbs)
Cardboard liner	1.000	EACH	4.000	4.000

Waste Items by Volume

Material Item	Quantity	Unit	Unit Wt(lbs)	Item Wt(lbs)
Oil-Dri (Inside 55 gal drum)	8.000	PINTS	0.420	3.360

Batch Id RTR14-00018 **Container Id** 10330364 **Analysis Id** 0000094715

Waste Parameters

Waste Parameter	Remaining Weight %	Actual Weight Lbs
Iron-based Metals/Alloys	0.000	0.000
Aluminum-based Metals/Alloys	0.000	0.000
Other metals	0.000	0.000
Other Inorganic Materials	100.000	484.835
Cellulosics	0.000	4.000
Rubber	0.000	0.000
Plastic (Waste Materials)	0.000	0.000
Inorganic matrix	0.000	0.000
Organic matrix	0.000	0.000
Soils/gravel	0.000	0.000
Steel (packaging materials)	0.000	142.000
Plastic (packaging materials)	0.000	2.000
Cellulosics Packaging	0.000	0.000

Analysis Esignature History

Esig Approval Id	User Id	Esignature Date	Comment
2689704	AATWELL	07-FEB-2014 13:26	

Batch Id RTR14-00018 **Container Id** 10333515 **Analysis Id** 0000094717

Container Type C drum, 83 Gallon **Analysis Status** Pass

RTR Date 07-FEB-2014 14:04 **Gross Weight** 610.785 **Lbs.** **Net Weight** 466.785 **Lbs.**

Equipment Z-213-106 **Waste Matrix Code** S3121 **IDC** RF-002 Second Stage Sludge

Recording Id 2RTR14-00011 **Procedure Id** INST-OI-12 **Revision** 52 **Approval Level** SPM

Is Test Pattern Resolution Ok? Yes **Start Side** A **Replicate** No **OIO** No

Audio Visual Ok? Yes **Operator** AATWELL

Result Comment Waste appears to be sludge.

Package

IDC Correct Yes **Recommended IDC** **Summary Category** S3000

Idc Change Reason

Rigid Liner Present? No **LinerType** NO LINER

Liner Punctured? N/A **Sharp Objects?** No

Liner Lid Present? No **Sharp Objects Are Protected?** Yes

Liner Lid Deformed? N/A **Layers Of Confinement** 2

Fill Factor 85

Bag Closure Method Twisted and Taped

Liquids

Liquid Present? Yes **Internal Container with Liquid** No

Internal Container with Liquid 0 pints **LA Candidate** No

Liquid Between Liner & Drum 0 pints **Containerized Liquid**

Total Liquid Amount 2 pints **Containerized Liquid Amt** 0 pints

Other Liquids 2 pints **Comment** aprox 2 pints of liquid at bottom of drum

Prohibited Liquids Present No **Comment**

Contents-Drum or Box

	Value	Comment		Value	Comment
Lead?	No		**Mercury Present?**	No	
Wet Cell Batteries?	No		**Explosives?**	No	
Prohibited Compressed Gases?	No		**PCBs Present?**	No	
Aerosol Cans?	No		**PCB Mass (lbs)**	0	
Non-Mixed Hazardous Waste Present?	No		**Sealed Containers Over 4L?**	No	

Non-Radionuclide Pyrophoric Materials Present? No

Waste exhibiting the characteristics of Ignitability, Corrosivity or Reactivity Present? No

Wastes Incompatible with backfill, seal and panel closure materials, container and packaging materials,shipping container or other wastes? No

Impenetrable Dense Objects? No

Waste Material Items

Packaging Materials

Material Item	Quantity	Unit	Unit Wt(lbs)	Item Wt(lbs)
Drum plastic bag	2.000	EACH	1.000	2.000
55-GAL DRUM (17c)	1.000	EACH	59.000	59.000

Waste Items byWeight

Material Item	Quantity	Unit	Unit Wt(lbs)	Item Wt(lbs)

Waste Items by Volume

Material Item	Quantity	Unit	Unit Wt(lbs)	Item Wt(lbs)
Liquids for Inorganic Matrix	2.000	PINTS	1.000	2.000

Batch Id RTR14-00018 **Container Id** 10333515 **Analysis Id** 0000094717

Waste Parameters

Waste Parameter	Remaining Weight %	Actual Weight Lbs
Iron-based Metals/Alloys	0.000	0.000
Aluminum-based Metals/Alloys	0.000	0.000
Other metals	0.000	0.000
Other Inorganic Materials	0.000	0.000
Cellulosics	0.000	0.000
Rubber	0.000	0.000
Plastic (Waste Materials)	0.000	0.000
Inorganic matrix	100.000	466.785
Organic matrix	0.000	0.000
Soils/gravel	0.000	0.000
Steel (packaging materials)	0.000	142.000
Plastic (packaging materials)	0.000	2.000
Cellulosics Packaging	0.000	0.000

Analysis Esignature History

Esig Approval Id	User Id	Esignature Date	Comment
2689730	AATWELL	07-FEB-2014 14:05	

Batch Id RTR14-00018 **Container Id** 10330378 **Analysis Id** 0000094720

Container Type C drum, 83 Gallon **Analysis Status** Pass

RTR Date 07-FEB-2014 14:26 **Gross Weight** 635.040 **Lbs.** **Net Weight** 491.040 **Lbs.**

Equipment Z-213-106 **Waste Matrix Code** S5490 **IDC** RF-960 Concrete, Asphalt, etc.

Recording Id 2RTR14-00011 **Procedure Id** INST-OI-12 **Revision** 52 **Approval Level** SPM

Is Test Pattern Resolution Ok? Yes **Start Side** A **Replicate** No **OIO** No

Audio Visual Ok? Yes **Operator** AATWELL

Result Comment Waste appears to be busted up concrete.
AK does not concur with the recommended IDC UN-00B for container 10330378 because waste is RF debris. Instead, AK recommends an IDC of RF-960. CHD 2/11/14
AK rework recommended IDC RF-960 per AK. JED 02/11/14
AK concurs with the recommended IDC, RF-960, for container 10330378. No AKR or NCR is necessary. CHD 02/11/14

Package

IDC Correct Yes **Recommended IDC** RF-960 **Summary Category** S5000

Idc Change Reason Per AK

Rigid Liner Present? No **LinerType** NO LINER

Liner Punctured? N/A **Sharp Objects?** No

Liner Lid Present? No **Sharp Objects Are Protected?** Yes

Liner Lid Deformed? N/A **Layers Of Confinement** 2

Fill Factor 90

Bag Closure Method Twisted and Taped

Liquids

Liquid Present? No **Internal Container with Liquid** No

Internal Container with Liquid 0 pints **LA Candidate** No

Liquid Between Liner & Drum 0 pints **Containerized Liquid**

Total Liquid Amount 0 pints **Containerized Liquid Amt** 0 pints

Other Liquids 0 pints **Comment**

Prohibited Liquids Present No **Comment**

Contents-Drum or Box

	Value	Comment		Value	Comment
Lead?	No		**Mercury Present?**	No	
Wet Cell Batteries?	No		**Explosives?**	No	
Prohibited Compressed Gases?	No		**PCBs Present?**	No	
Aerosol Cans?	No		**PCB Mass (lbs)**	0	
Non-Mixed Hazardous Waste Present?	No		**Sealed Containers Over 4L?**	No	

Non-Radionuclide Pyrophoric Materials Present? No

Waste exhibiting the characteristics of Ignitability, Corrosivity or Reactivity Present? No

Wastes Incompatible with backfill, seal and panel closure materials, container and packaging materials,shipping container or other wastes? No

Impenetrable Dense Objects? Yes - Unacceptable aprox 50% of the waste is impenetrable

Waste Material Items

Packaging Materials

Material Item	Quantity	Unit	Unit Wt(lbs)	Item Wt(lbs)
Drum plastic bag	2.000	EACH	1.000	2.000
55-GAL DRUM (17c)	1.000	EACH	59.000	59.000

Waste Items byWeight

Material Item	Quantity	Unit	Unit Wt(lbs)	Item Wt(lbs)
Cardboard liner	1.000	EACH	4.000	4.000

Waste Items by Volume

Material Item	Quantity	Unit	Unit Wt(lbs)	Item Wt(lbs)

Batch Id RTR14-00018 **Container Id** 10330378 **Analysis Id** 0000094720

Waste Parameters

Waste Parameter	Remaining Weight %	Actual Weight Lbs
Iron-based Metals/Alloys	0.000	0.000
Aluminum-based Metals/Alloys	0.000	0.000
Other metals	0.000	0.000
Other Inorganic Materials	100.000	487.040
Cellulosics	0.000	4.000
Rubber	0.000	0.000
Plastic (Waste Materials)	0.000	0.000
Inorganic matrix	0.000	0.000
Organic matrix	0.000	0.000
Soils/gravel	0.000	0.000
Steel (packaging materials)	0.000	142.000
Plastic (packaging materials)	0.000	2.000
Cellulosics Packaging	0.000	0.000

Analysis Esignature History

Esig Approval Id	User Id	Esignature Date	Comment
2692555	CHINKLE	11-FEB-2014 14:36	Batch is promoted. chd 02/11/14
2692461	JDUKE	11-FEB-2014 13:23	AK rework
2692167	CHINKLE	11-FEB-2014 05:48	This batch is returned for rework. AK does not concur with the recommended IDC change for containers 10341363, 10335408, 10334056, 10330378, 10330235, 10328833, 10326752 and 10229803. CHD 2/11/14
2689756	AATWELL	07-FEB-2014 14:26	

Batch Id RTR14-00018 **Container Id** 10329047 **Analysis Id** 0000094721

Container Type C drum, 83 Gallon **Analysis Status** Pass

RTR Date 07-FEB-2014 14:46 **Gross Weight** 277.830 **Lbs.** **Net Weight** 133.830 **Lbs.**

Equipment Z-213-106 **Waste Matrix Code** S5900 **IDC** UN-00B Undefined Debris

Recording Id 2RTR14-00011 **Procedure Id** INST-OI-12 **Revision** 52 **Approval Level** SPM

Is Test Pattern Resolution Ok? Yes **Start Side** A **Replicate** No **OIO** No

Audio Visual Ok? Yes **Operator** AATWELL

Result Comment Waste appears to be primarily cellulosics in the form of paper and rags.
AK concurs with the recommended IDC, UN-00B, for container 10329047. No AKR or NCR is necessary. CHD __/__/__

Package

IDC Correct Yes **Recommended IDC** **Summary Category** S5000

Idc Change Reason

Rigid Liner Present? No **LinerType** NO LINER

Liner Punctured? N/A **Sharp Objects?** No

Liner Lid Present? No **Sharp Objects Are Protected?** Yes

Liner Lid Deformed? N/A **Layers Of Confinement** 2

Fill Factor 95

Bag Closure Method Twisted and Taped

Liquids

Liquid Present? No **Internal Container with Liquid** No

Internal Container with Liquid 0 pints **LA Candidate** No

Liquid Between Liner & Drum 0 pints **Containerized Liquid**

Total Liquid Amount 0 pints **Containerized Liquid Amt** 0 pints

Other Liquids 0 pints **Comment**

Prohibited Liquids Present No **Comment**

Contents-Drum or Box

	Value	Comment		Value	Comment
Lead?	Yes, Acceptable	lead tape	**Mercury Present?**	No	
Wet Cell Batteries?	No		**Explosives?**	No	
Prohibited Compressed Gases?	No		**PCBs Present?**	No	
Aerosol Cans?	No		**PCB Mass (lbs)**	0	
Non-Mixed Hazardous Waste Present?	No		**Sealed Containers Over 4L?**	No	

Non-Radionuclide Pyrophoric Materials Present? No

Waste exhibiting the characteristics of Ignitability, Corrosivity or Reactivity Present? No

Wastes Incompatible with backfill, seal and panel closure materials, container and packaging materials,shipping container or other wastes? No

Impenetrable Dense Objects? No

Waste Material Items

Packaging Materials

Material Item	Quantity	Unit	Unit Wt(lbs)	Item Wt(lbs)
Drum plastic bag	2.000	EACH	1.000	2.000
55-GAL DRUM (17c)	1.000	EACH	59.000	59.000

Waste Items byWeight

Material Item	Quantity	Unit	Unit Wt(lbs)	Item Wt(lbs)
lead tape	1.000	EACH	0.250	0.250
Cardboard liner	1.000	EACH	4.000	4.000

Waste Items by Volume

Material Item	Quantity	Unit	Unit Wt(lbs)	Item Wt(lbs)
Oil-Dri (Inside 55 gal drum)	8.000	PINTS	0.420	3.360

Batch Id RTR14-00018 **Container Id** 10329047 **Analysis Id** 0000094721

Waste Parameters

Waste Parameter	Remaining Weight %	Actual Weight Lbs
Iron-based Metals/Alloys	0.000	0.000
Aluminum-based Metals/Alloys	0.000	0.000
Other metals	0.000	0.250
Other Inorganic Materials	0.000	3.360
Cellulosics	100.000	130.220
Rubber	0.000	0.000
Plastic (Waste Materials)	0.000	0.000
Inorganic matrix	0.000	0.000
Organic matrix	0.000	0.000
Soils/gravel	0.000	0.000
Steel (packaging materials)	0.000	142.000
Plastic (packaging materials)	0.000	2.000
Cellulosics Packaging	0.000	0.000

Analysis Esignature History

Esig Approval Id	User Id	Esignature Date	Comment
2692169	CHINKLE	11-FEB-2014 05:48	This batch is returned for rework. AK does not concur with the recommended IDC change for containers 10341363, 10335408, 10334056, 10330378, 10330235, 10328833, 10326752 and 10229803. CHD 2/11/14
2689776	AATWELL	07-FEB-2014 14:46	

Batch Id RTR14-00018 **Container Id** 10328833 **Analysis Id** 0000094722

Container Type C drum, 83 Gallon **Analysis Status** Pass

RTR Date 07-FEB-2014 16:02 **Gross Weight** 328.545 **Lbs.** **Net Weight** 184.545 **Lbs.**

Equipment Z-213-106 **Waste Matrix Code** S5300 **IDC** RF-330 Paper and Rags-Dry

Recording Id 2RTR14-00011 **Procedure Id** INST-OI-12 **Revision** 52 **Approval Level** SPM

Is Test Pattern Resolution Ok? Yes **Start Side** A **Replicate** No **OIO** No

Audio Visual Ok? Yes **Operator** AATWELL

Result Comment Waste is primarily cellulosics in the form of paper and rags.
AK does not concur with the recommended IDC UN-00B for container 10328833 because waste is RF debris. Instead, AK recommends an IDC of RF-330. CHD 2/11/14
AK rework recommended IDC RF-330 per AK. JED 02/11/14
AK concurs with the recommended IDC, RF-330, for container 10328833. No AKR or NCR is necessary. CHD 02/11/14

Package

IDC Correct Yes **Recommended IDC** RF-330 **Summary Category** S5000

Idc Change Reason Per AKI

Rigid Liner Present? No **LinerType** NO LINER

Liner Punctured? N/A **Sharp Objects?** No

Liner Lid Present? No **Sharp Objects Are Protected?** Yes

Liner Lid Deformed? N/A **Layers Of Confinement** 2

Fill Factor 95

Bag Closure Method Twisted and Taped

Liquids

Liquid Present? Yes **Internal Container with Liquid** Yes

Internal Container with Liquid .03 pints **LA Candidate** No

Liquid Between Liner & Drum 0 pints **Containerized Liquid**

Total Liquid Amount .03 pints **Containerized Liquid Amt** 0 pints

Other Liquids 0 pints **Comment** poly bottle at middle chine with aprox .03 pints of liquid in it

Prohibited Liquids Present No **Comment**

Contents-Drum or Box

	Value	Comment		Value	Comment
Lead?	No		**Mercury Present?**	No	
Wet Cell Batteries?	No		**Explosives?**	No	
Prohibited Compressed Gases?	No		**PCBs Present?**	No	
Aerosol Cans?	No		**PCB Mass (lbs)**	0	
Non-Mixed Hazardous Waste Present?	No		**Sealed Containers Over 4L?**	No	

Non-Radionuclide Pyrophoric Materials Present? No

Waste exhibiting the characteristics of Ignitability, Corrosivity or Reactivity Present? No

Wastes Incompatible with backfill, seal and panel closure materials, container and packaging materials,shipping container or other wastes? No

Impenetrable Dense Objects? No

Waste Material Items

Packaging Materials

Material Item	Quantity	Unit	Unit Wt(lbs)	Item Wt(lbs)
Drum plastic bag	2.000	EACH	1.000	2.000
55-GAL DRUM (17c)	1.000	EACH	59.000	59.000

Waste Items byWeight

Material Item	Quantity	Unit	Unit Wt(lbs)	Item Wt(lbs)
poly bottle	1.000	EACH	0.250	0.250
Cardboard liner	1.000	EACH	4.000	4.000
D-cell Battery	3.000	EACH	0.250	0.750

Batch Id RTR14-00018 **Container Id** 10328833 **Analysis Id** 0000094722

Waste Items by Volume

Material Item	Quantity	Unit	Unit Wt(lbs)	Item Wt(lbs)
Oil-Dri (Inside 55 gal drum)	4.000	PINTS	0.420	1.680
Liquids for Other Inorganics	0.030	PINTS	1.000	0.030

Waste Parameters

Waste Parameter	Remaining Weight %	Actual Weight Lbs
Iron-based Metals/Alloys	0.000	0.000
Aluminum-based Metals/Alloys	0.000	0.000
Other metals	0.000	0.750
Other Inorganic Materials	0.000	1.710
Cellulosics	100.000	181.835
Rubber	0.000	0.000
Plastic (Waste Materials)	0.000	0.250
Inorganic matrix	0.000	0.000
Organic matrix	0.000	0.000
Soils/gravel	0.000	0.000
Steel (packaging materials)	0.000	142.000
Plastic (packaging materials)	0.000	2.000
Cellulosics Packaging	0.000	0.000
MLLW Waste	0.000	0.000

Analysis Esignature History

Esig Approval Id	User Id	Esignature Date	Comment
2692557	CHINKLE	11-FEB-2014 14:36	Batch is promoted. chd 02/11/14
2692457	JDUKE	11-FEB-2014 13:21	AK rework
2692170	CHINKLE	11-FEB-2014 05:48	This batch is returned for rework. AK does not concur with the recommended IDC change for containers 10341363, 10335408, 10334056, 10330378, 10330235, 10328833, 10326752 and 10229803. CHD 2/11/14
2689831	AATWELL	07-FEB-2014 16:02	

Batch Id RTR14-00018 **Container Id** 10358127 **Analysis Id** 0000094727

Container Type C drum, 83 Gallon **Analysis Status** Pass

RTR Date 07-FEB-2014 16:38 **Gross Weight** 291.060 **Lbs.** **Net Weight** 131.060 **Lbs.**

Equipment Z-213-106 **Waste Matrix Code** S5410 **IDC** RF-376 Cemented Insulation and Filter Media

Recording Id 2RTR14-00011 **Procedure Id** INST-OI-12 **Revision** 52 **Approval Level** SPM

Is Test Pattern Resolution Ok? Yes **Start Side** A **Replicate** No **OIO** No

Audio Visual Ok? Yes **Operator** AATWELL

Result Comment Waste appears to be round filters. (Ful-Flo filters with grooves or cross hatched weave)
Rework to add to remaining waste description and correct waste parameters. DKL 2/16/14

Package

IDC Correct Yes **Recommended IDC** **Summary Category** S5000

Idc Change Reason

Rigid Liner Present? Yes **LinerType** TYPE 3

Liner Punctured? Yes **Sharp Objects?** No

Liner Lid Present? Yes **Sharp Objects Are Protected?** Yes

Liner Lid Deformed? No **Layers Of Confinement** 3

Fill Factor 85

Bag Closure Method Twisted and Taped

Liquids

Liquid Present? Yes **Internal Container with Liquid** No

Internal Container with Liquid 0 pints **LA Candidate** No

Liquid Between Liner & Drum 0 pints **Containerized Liquid**

Total Liquid Amount 12 pints **Containerized Liquid Amt** 0 pints

Other Liquids 12 pints **Comment** aprox 12 pints of liquid in multiple spots in waste and at bottom of drum

Prohibited Liquids Present Yes **Comment** >1%

Contents-Drum or Box

	Value	Comment		Value	Comment
Lead?	No		**Mercury Present?**	No	
Wet Cell Batteries?	No		**Explosives?**	No	
Prohibited Compressed Gases?	No		**PCBs Present?**	No	
Aerosol Cans?	No		**PCB Mass (lbs)**	0	
Non-Mixed Hazardous Waste Present?	No		**Sealed Containers Over 4L?**	No	

Non-Radionuclide Pyrophoric Materials Present? No

Waste exhibiting the characteristics of Ignitability, Corrosivity or Reactivity Present? No

Wastes Incompatible with backfill, seal and panel closure materials, container and packaging materials,shipping container or other wastes? No

Impenetrable Dense Objects? No

Waste Material Items

Packaging Materials

Material Item	Quantity	Unit	Unit Wt(lbs)	Item Wt(lbs)
90 mil liner	1.000	EACH	16.000	16.000
Drum plastic bag	2.000	EACH	1.000	2.000
55-GAL DRUM (17c)	1.000	EACH	59.000	59.000

Waste Items byWeight

Material Item	Quantity	Unit	Unit Wt(lbs)	Item Wt(lbs)
Plastic bag for waste	1.000	EACH	0.250	0.250

Waste Items by Volume

Material Item	Quantity	Unit	Unit Wt(lbs)	Item Wt(lbs)
Liquids for Other Inorganics	12.000	PINTS	1.000	12.000

Batch Id RTR14-00018 **Container Id** 10358127 **Analysis Id** 0000094727

Waste Parameters

Waste Parameter	Remaining Weight %	Actual Weight Lbs
Iron-based Metals/Alloys	0.000	0.000
Aluminum-based Metals/Alloys	0.000	0.000
Other metals	0.000	0.000
Other Inorganic Materials	0.000	12.000
Cellulosics	0.000	0.000
Rubber	0.000	0.000
Plastic (Waste Materials)	100.000	119.060
Inorganic matrix	0.000	0.000
Organic matrix	0.000	0.000
Soils/gravel	0.000	0.000
Steel (packaging materials)	0.000	142.000
Plastic (packaging materials)	0.000	18.000
Cellulosics Packaging	0.000	0.000

Analysis Esignature History

Esig Approval Id	User Id	Esignature Date	Comment
2696460	DLEE	16-FEB-2014 16:38	
2689885	AATWELL	07-FEB-2014 16:38	

Batch Id RTR14-00018 **Container Id** 10341363 **Analysis Id** 0000094729

Container Type C drum, 83 Gallon **Analysis Status** Pass

RTR Date 07-FEB-2014 17:07 **Gross Weight** 341.775 Lbs. **Net Weight** 198.775 Lbs.

Equipment Z-213-106 **Waste Matrix Code** S5490 **IDC** RF-960 Concrete, Asphalt, etc.

Recording Id 2RTR14-00011 **Procedure Id** INST-OI-12 **Revision** 52 **Approval Level** SPM

Is Test Pattern Resolution Ok? Yes **Start Side** A **Replicate** No **OIO** No

Audio Visual Ok? Yes **Operator** AATWELL

Result Comment Waste appears to be construction rubble in the form busted up concrete and cinder blocks.
AK does not concur with the recommended IDC UN-00B for container 10341363 because waste is RF debris. Instead, AK recommends an IDC of RF-960. CHD 2/11/14
AK rework recommended IDC RF-960 per AK. JED 02/11/14
AK concurs with the recommended IDC, RF-960, for container 10341363. No AKR or NCR is necessary. CHD 02/11/14

Package

IDC Correct Yes **Recommended IDC** RF-960 **Summary Category** S5000

Idc Change Reason Per AK

Rigid Liner Present? No **LinerType** NO LINER

Liner Punctured? N/A **Sharp Objects?** No

Liner Lid Present? No **Sharp Objects Are Protected?** Yes

Liner Lid Deformed? N/A **Layers Of Confinement** 1

Fill Factor 85

Bag Closure Method Twisted and Taped

Liquids

Liquid Present? Yes **Internal Container with Liquid** No

Internal Container with Liquid 0 pints **LA Candidate** No

Liquid Between Liner & Drum 0 pints **Containerized Liquid**

Total Liquid Amount .03 pints **Containerized Liquid Amt** 0 pints

Other Liquids .03 pints **Comment** aprox .03 pints of liquid in bagging at middle chine.

Prohibited Liquids Present No **Comment**

Contents-Drum or Box

	Value	Comment		Value	Comment
Lead?	No		**Mercury Present?**	No	
Wet Cell Batteries?	No		**Explosives?**	No	
Prohibited Compressed Gases?	No		**PCBs Present?**	No	
Aerosol Cans?	No		**PCB Mass (lbs)**	0	
Non-Mixed Hazardous Waste Present?	No		**Sealed Containers Over 4L?**	No	

Non-Radionuclide Pyrophoric Materials Present? No

Waste exhibiting the characteristics of Ignitability, Corrosivity or Reactivity Present? No

Wastes Incompatible with backfill, seal and panel closure materials, container and packaging materials,shipping container or other wastes? No

Impenetrable Dense Objects? No

Waste Material Items

Packaging Materials

Material Item	Quantity	Unit	Unit Wt(lbs)	Item Wt(lbs)
Drum plastic bag	1.000	EACH	1.000	1.000
55-GAL DRUM (17c)	1.000	EACH	59.000	59.000

Waste Items byWeight

Material Item	Quantity	Unit	Unit Wt(lbs)	Item Wt(lbs)
wood handled brush	1.000	EACH	1.000	1.000
Cardboard liner	1.000	EACH	4.000	4.000

Batch Id RTR14-00018 **Container Id** 10341363 **Analysis Id** 0000094729

Waste Items by Volume

Material Item	Quantity	Unit	Unit Wt(lbs)	Item Wt(lbs)
Oil-Dri (Inside 55 gal drum)	20.000	PINTS	0.420	8.400
Liquids for Other Inorganics	0.030	PINTS	1.000	0.030

Waste Parameters

Waste Parameter	Remaining Weight %	Actual Weight Lbs
Iron-based Metals/Alloys	0.000	0.000
Aluminum-based Metals/Alloys	0.000	0.000
Other metals	0.000	0.000
Other Inorganic Materials	100.000	193.775
Cellulosics	0.000	5.000
Rubber	0.000	0.000
Plastic (Waste Materials)	0.000	0.000
Inorganic matrix	0.000	0.000
Organic matrix	0.000	0.000
Soils/gravel	0.000	0.000
Steel (packaging materials)	0.000	142.000
Plastic (packaging materials)	0.000	1.000
Cellulosics Packaging	0.000	0.000

Analysis Esignature History

Esig Approval Id	User Id	Esignature Date	Comment
2692552	CHINKLE	11-FEB-2014 14:36	Batch is promoted. chd 02/11/14
2692464	JDUKE	11-FEB-2014 13:27	AK rework
2692164	CHINKLE	11-FEB-2014 05:48	This batch is returned for rework. AK does not concur with the recommended IDC change for containers 10341363, 10335408, 10334056, 10330378, 10330235, 10328833, 10326752 and 10229803. CHD 2/11/14
2689895	AATWELL	07-FEB-2014 17:07	

Batch Id RTR14-00018 **Container Id** 10244374 **Analysis Id** 0000094730

Container Type C drum, 83 Gallon **Analysis Status** Pass

RTR Date 07-FEB-2014 17:29 **Gross Weight** 229.320 **Lbs.** **Net Weight** 85.320 **Lbs**

Equipment Z-213-106 **Waste Matrix Code** S5900 **IDC** UN-00B Undefined Debris

Recording Id 2RTR14-00011 **Procedure Id** INST-OI-12 **Revision** 52 **Approval Level** SPM

Is Test Pattern Resolution Ok? Yes **Start Side** A **Replicate** No **OIO** No

Audio Visual Ok? Yes **Operator** AATWELL

Result Comment Waste is primarily cellulosics in the form of PPE, paper and rags.
AK concurs with the recommended IDC, UN-00B, for container 10244374. No AKR or NCR is necessary. CHD 2/11/14

Package

IDC Correct Yes **Recommended IDC** **Summary Category** S5000

Idc Change Reason

Rigid Liner Present? No **LinerType** NO LINER

Liner Punctured? N/A **Sharp Objects?** No

Liner Lid Present? No **Sharp Objects Are Protected?** Yes

Liner Lid Deformed? N/A **Layers Of Confinement** 3

Fill Factor 95

Bag Closure Method Twisted and Taped

Liquids

Liquid Present? No **Internal Container with Liquid** No

Internal Container with Liquid 0 pints **LA Candidate** No

Liquid Between Liner & Drum 0 pints **Containerized Liquid**

Total Liquid Amount 0 pints **Containerized Liquid Amt** 0 pints

Other Liquids 0 pints **Comment**

Prohibited Liquids Present No **Comment**

Contents-Drum or Box

	Value	Comment		Value	Comment
Lead?	No		**Mercury Present?**	No	
Wet Cell Batteries?	No		**Explosives?**	No	
Prohibited Compressed Gases?	No		**PCBs Present?**	No	
Aerosol Cans?	No		**PCB Mass (lbs)**	0	
Non-Mixed Hazardous Waste Present?	No		**Sealed Containers Over 4L?**	No	

Non-Radionuclide Pyrophoric Materials Present? No

Waste exhibiting the characteristics of Ignitability, Corrosivity or Reactivity Present? No

Wastes Incompatible with backfill, seal and panel closure materials, container and packaging materials,shipping container or other wastes? No

Impenetrable Dense Objects? No

Waste Material Items

Packaging Materials

Material Item	Quantity	Unit	Unit Wt(lbs)	Item Wt(lbs)
Drum plastic bag	2.000	EACH	1.000	2.000
55-GAL DRUM (17c)	1.000	EACH	59.000	59.000

Waste Items byWeight

Material Item	Quantity	Unit	Unit Wt(lbs)	Item Wt(lbs)
plastic waste	1.000	EACH	2.000	2.000
metal debris	1.000	EACH	5.000	5.000
respirator mask and filter cartridges	1.000	EACH	3.000	3.000
Plastic bag for waste	1.000	EACH	0.250	0.250

Waste Items by Volume

Material Item	Quantity	Unit	Unit Wt(lbs)	Item Wt(lbs)
Oil-Dri (Inside 55 gal drum)	4.000	PINTS	0.420	1.680

Batch Id RTR14-00018 **Container Id** 10244374 **Analysis Id** 0000094730

Waste Parameters

Waste Parameter	Remaining Weight %	Actual Weight Lbs
Iron-based Metals/Alloys	0.000	5.000
Aluminum-based Metals/Alloys	0.000	0.450
Other metals	0.000	0.000
Other Inorganic Materials	0.000	1.680
Cellulosics	100.000	73.540
Rubber	0.000	2.400
Plastic (Waste Materials)	0.000	2.250
Inorganic matrix	0.000	0.000
Organic matrix	0.000	0.000
Soils/gravel	0.000	0.000
Steel (packaging materials)	0.000	142.000
Plastic (packaging materials)	0.000	2.000
Cellulosics Packaging	0.000	0.000

Analysis Esignature History

Esig Approval Id	User Id	Esignature Date	Comment
2692172	CHINKLE	11-FEB-2014 05:48	This batch is returned for rework. AK does not concur with the recommended IDC change for containers 10341363, 10335408, 10334056, 10330378, 10330235, 10328833, 10326752 and 10229803. CHD 2/11/14
2689898	AATWELL	07-FEB-2014 17:29	

Batch Id RTR14-00018 **Container Id** 10167918 **Analysis Id** 0000094732

Container Type C drum, 83 Gallon **Analysis Status** Pass

RTR Date 07-FEB-2014 17:50 **Gross Weight** 610.785 Lbs. **Net Weight** 451.785 Lbs.

Equipment Z-213-106 **Waste Matrix Code** S3121 **IDC** RF-002 Second Stage Sludge

Recording Id 2RTR14-00011 **Procedure Id** INST-OI-12 **Revision** 52 **Approval Level** SPM

Is Test Pattern Resolution Ok? Yes **Start Side** A **Replicate** No **OIO** No

Audio Visual Ok? Yes **Operator** AATWELL

Result Comment Waste appears to be sludge.

Package

IDC Correct Yes **Recommended IDC** **Summary Category** S3000

Idc Change Reason

Rigid Liner Present? Yes **LinerType** TYPE I

Liner Punctured? Yes **Sharp Objects?** No

Liner Lid Present? Yes **Sharp Objects Are Protected?** Yes

Liner Lid Deformed? No **Layers Of Confinement** 1

Fill Factor 90

Bag Closure Method Twisted and Taped

Liquids

Liquid Present? Yes **Internal Container with Liquid** No

Internal Container with Liquid 0 pints **LA Candidate** No

Liquid Between Liner & Drum 0 pints **Containerized Liquid**

Containerized Liquid Amt 0 pints

Total Liquid Amount .5 pints

Other Liquids .5 pints **Comment** aprox .50 pints of liquid between middle and bottom chines

Prohibited Liquids Present No **Comment**

Contents-Drum or Box

	Value	Comment		Value	Comment
Lead?	No		**Mercury Present?**	No	
Wet Cell Batteries?	No		**Explosives?**	No	
Prohibited Compressed Gases?	No		**PCBs Present?**	No	
Aerosol Cans?	No		**PCB Mass (lbs)**	0	
Non-Mixed Hazardous Waste Present?	No		**Sealed Containers Over 4L?**	No	

Non-Radionuclide Pyrophoric Materials Present? No

Waste exhibiting the characteristics of Ignitability, Corrosivity or Reactivity Present? No

Wastes Incompatible with backfill, seal and panel closure materials, container and packaging materials,shipping container or other wastes? No

Impenetrable Dense Objects? No

Waste Material Items

Packaging Materials

Material Item	Quantity	Unit	Unit Wt(lbs)	Item Wt(lbs)
90 mil liner	1.000	EACH	16.000	16.000
Drum plastic bag	1.000	EACH	1.000	1.000
55-GAL DRUM (17c)	1.000	EACH	59.000	59.000

Waste Items byWeight

Material Item	Quantity	Unit	Unit Wt(lbs)	Item Wt(lbs)

Waste Items by Volume

Material Item	Quantity	Unit	Unit Wt(lbs)	Item Wt(lbs)
Liquids for Inorganic Matrix	0.500	PINTS	1.000	0.500

Batch Id RTR14-00018 **Container Id** 10167918 **Analysis Id** 0000094732

Waste Parameters

Waste Parameter	Remaining Weight %	Actual Weight Lbs
Iron-based Metals/Alloys	0.000	0.000
Aluminum-based Metals/Alloys	0.000	0.000
Other metals	0.000	0.000
Other Inorganic Materials	0.000	0.000
Cellulosics	0.000	0.000
Rubber	0.000	0.000
Plastic (Waste Materials)	0.000	0.000
Inorganic matrix	100.000	451.785
Organic matrix	0.000	0.000
Soils/gravel	0.000	0.000
Steel (packaging materials)	0.000	142.000
Plastic (packaging materials)	0.000	17.000
Cellulosics Packaging	0.000	0.000

Analysis Esignature History

Esig Approval Id	User Id	Esignature Date	Comment
2689904	AATWELL	07-FEB-2014 17:50	

Batch Id RTR14-00018 **Container Id** 10229803 **Analysis Id** 0000094733

Container Type C drum, 83 Gallon **Analysis Status** Pass

RTR Date 08-FEB-2014 10:28 **Gross Weight** 771.750 **Lbs.** **Net Weight** 628.750 **Lbs.**

Equipment Z-213-106 **Waste Matrix Code** S5112 **IDC** RF-480 Non-special Source Metal

Recording Id 2RTR14-00011 **Procedure Id** INST-OI-12 **Revision** 52 **Approval Level** SPM

Is Test Pattern Resolution Ok? Yes **Start Side** A **Replicate** No **OIO** No

Audio Visual Ok? Yes **Operator** AATWELL

Result Comment Waste is primarily metal debris, pipe, cans, sheet metal, aerosol can and misc metal debris.
AK does not concur with the recommended IDC UN-00B for container 10229803 because assay indicates waste is RF debris. Instead, AK recommends an IDC of RF-480. CHD 2/11/14
AK rework recommended IDC RF-480 per AK. JED 02/11/14
AK concurs with the recommended IDC, RF-480, for container 10229803. No AKR or NCR is necessary. CHD 02/11/14
Rework to correct the Lead question and the waste parameters. DKL 2/16/14

Package

IDC Correct Yes **Recommended IDC** RF-480 **Summary Category** S5000

Idc Change Reason Per AK

Rigid Liner Present? No **LinerType** NO LINER

Liner Punctured? N/A **Sharp Objects?** No

Liner Lid Present? No **Sharp Objects Are Protected?** Yes

Liner Lid Deformed? N/A **Layers Of Confinement** 1

Fill Factor 98

Bag Closure Method Twisted and Taped

Liquids

Liquid Present? Yes **Internal Container with Liquid** Yes

Internal Container with Liquid 2 pints **LA Candidate** No

Liquid Between Liner & Drum 0 pints **Containerized Liquid** 0 pints

Total Liquid Amount 2 pints

Other Liquids 0 pints **Comment** 2 cans at bottom of drum with aprox 1 pint of liquid in each

Prohibited Liquids Present Yes **Comment** internal container with >60 mil

Contents-Drum or Box

	Value	Comment		Value	Comment
Lead?	Yes, Acceptable	Lead sheeting	**Mercury Present?**	No	
Wet Cell Batteries?	No		**Explosives?**	No	
Prohibited Compressed Gases?	Yes	Aerosol can	**PCBs Present?**	No	
Aerosol Cans?	Yes	Aerosol can	**PCB Mass (lbs)**	0	
Non-Mixed Hazardous Waste Present?	No		**Sealed Containers Over 4L?**	No	

Non-Radionuclide Pyrophoric Materials Present? No

Waste exhibiting the characteristics of Ignitability, Corrosivity or Reactivity Present? No

Wastes Incompatible with backfill, seal and panel closure materials, container and packaging materials,shipping container or other wastes? No

Impenetrable Dense Objects? Yes - Unacceptable aprox 75% of the waste in this container is impenetrable.

Waste Material Items

Packaging Materials

Material Item	Quantity	Unit	Unit Wt(lbs)	Item Wt(lbs)
Drum plastic bag	1.000	EACH	1.000	1.000
55-GAL DRUM (17c)	1.000	EACH	59.000	59.000

Waste Items byWeight

Material Item	Quantity	Unit	Unit Wt(lbs)	Item Wt(lbs)
Lead sheeting	1.000	EACH	50.000	50.000
plastic waste	1.000	EACH	2.000	2.000
Aerosol Can	1.000	EACH	0.240	0.240

Batch Id RTR14-00018 **Container Id** 10229803 **Analysis Id** 0000094733

Waste Items by Volume

Material Item	Quantity	Unit	Unit Wt(lbs)	Item Wt(lbs)
Oil-Dri (Inside 55 gal drum)	200.000	PINTS	0.420	84.000
Liquids for Other Inorganics	2.000	PINTS	1.000	2.000

Waste Parameters

Waste Parameter	Remaining Weight %	Actual Weight Lbs
Iron-based Metals/Alloys	100.000	490.750
Aluminum-based Metals/Alloys	0.000	0.000
Other metals	0.000	50.000
Other Inorganic Materials	0.000	86.000
Cellulosics	0.000	0.000
Rubber	0.000	0.000
Plastic (Waste Materials)	0.000	2.000
Inorganic matrix	0.000	0.000
Organic matrix	0.000	0.000
Soils/gravel	0.000	0.000
Steel (packaging materials)	0.000	142.000
Plastic (packaging materials)	0.000	1.000
Cellulosics Packaging	0.000	0.000

Analysis Esignature History

Esig Approval Id	User Id	Esignature Date	Comment
2696454	DLEE	16-FEB-2014 16:30	
2692559	CHINKLE	11-FEB-2014 14:36	Batch is promoted. chd 02/11/14
2692454	JDUKE	11-FEB-2014 13:19	ak rework
2692173	CHINKLE	11-FEB-2014 05:48	This batch is returned for rework. AK does not concur with the recommended IDC change for containers 10341363, 10335408, 10334056, 10330378, 10330235, 10328833, 10326752 and 10229803. CHD 2/11/14
2690231	AATWELL	08-FEB-2014 10:28	

Batch Id RTR14-00018 **Container Id** 10330235 **Analysis Id** 0000094736

Container Type C drum, 83 Gallon **Analysis Status** Pass

RTR Date 08-FEB-2014 10:41 **Gross Weight** 485.100 **Lbs.** **Net Weight** 342.100 **Lbs.**

Equipment Z-213-106 **Waste Matrix Code** S5490 **IDC** RF-960 Concrete, Asphalt, etc.

Recording Id 2RTR14-00011 **Procedure Id** INST-OI-12 **Revision** 52 **Approval Level** SPM

Is Test Pattern Resolution Ok? Yes **Start Side** A **Replicate** No **OIO** No

Audio Visual Ok? Yes **Operator** AATWELL

Result Comment Waste appears to be construction rubble in the form of busted up concrete.
AK does not concur with the recommended IDC UN-00B for container 10330235 because waste is RF debris. Instead, AK recommends an IDC of RF-960. CHD 2/11/14
AK rework recommended IDC RF-960 per AK. JED 02/11/14
AK concurs with the recommended IDC, RF-960, for container 10330235. No AKR or NCR is necessary. CHD 02/11/14

Package

IDC Correct Yes **Recommended IDC** RF-960 **Summary Category** S5000

Idc Change Reason Per AK

Rigid Liner Present? No **LinerType** NO LINER

Liner Punctured? N/A **Sharp Objects?** No

Liner Lid Present? No **Sharp Objects Are Protected?** Yes

Liner Lid Deformed? N/A **Layers Of Confinement** 1

Fill Factor 90

Bag Closure Method Twisted and Taped

Liquids

Liquid Present? No **Internal Container with Liquid** No

Internal Container with Liquid 0 pints **LA Candidate** No

Liquid Between Liner & Drum 0 pints **Containerized Liquid**

Total Liquid Amount 0 pints **Containerized Liquid Amt** 0 pints

Other Liquids 0 pints **Comment**

Prohibited Liquids Present No **Comment**

Contents-Drum or Box

	Value	Comment		Value	Comment
Lead?	No		**Mercury Present?**	No	
Wet Cell Batteries?	No		**Explosives?**	No	
Prohibited Compressed Gases?	No		**PCBs Present?**	No	
Aerosol Cans?	No		**PCB Mass (lbs)**	0	
Non-Mixed Hazardous Waste Present?	No		**Sealed Containers Over 4L?**	No	

Non-Radionuclide Pyrophoric Materials Present? No

Waste exhibiting the characteristics of Ignitability, Corrosivity or Reactivity Present? No

Wastes Incompatible with backfill, seal and panel closure materials, container and packaging materials,shipping container or other wastes? No

Impenetrable Dense Objects? No

Waste Material Items

Packaging Materials

Material Item	Quantity	Unit	Unit Wt(lbs)	Item Wt(lbs)
Drum plastic bag	1.000	EACH	1.000	1.000
55-GAL DRUM (17c)	1.000	EACH	59.000	59.000

Waste Items byWeight

Material Item	Quantity	Unit	Unit Wt(lbs)	Item Wt(lbs)
metal debris	1.000	EACH	10.000	10.000
Cardboard liner	1.000	EACH	4.000	4.000

Waste Items by Volume

Material Item	Quantity	Unit	Unit Wt(lbs)	Item Wt(lbs)
Oil-Dri (Inside 55 gal drum)	4.000	PINTS	0.420	1.680

Batch Id RTR14-00018 **Container Id** 10330235 **Analysis Id** 0000094736

Waste Parameters

Waste Parameter	Remaining Weight %	Actual Weight Lbs
Iron-based Metals/Alloys	0.000	10.000
Aluminum-based Metals/Alloys	0.000	0.000
Other metals	0.000	0.000
Other Inorganic Materials	100.000	328.100
Cellulosics	0.000	4.000
Rubber	0.000	0.000
Plastic (Waste Materials)	0.000	0.000
Inorganic matrix	0.000	0.000
Organic matrix	0.000	0.000
Soils/gravel	0.000	0.000
Steel (packaging materials)	0.000	142.000
Plastic (packaging materials)	0.000	1.000
Cellulosics Packaging	0.000	0.000
MLLW Waste	0.000	0.000

Analysis Esignature History

Esig Approval Id	User Id	Esignature Date	Comment
2692556	CHINKLE	11-FEB-2014 14:36	Batch is promoted. chd 02/11/14
2692460	JDUKE	11-FEB-2014 13:22	ak rework
2692168	CHINKLE	11-FEB-2014 05:48	This batch is returned for rework. AK does not concur with the recommended IDC change for containers 10341363, 10335408, 10334056, 10330378, 10330235, 10328833, 10326752 and 10229803. CHD 2/11/14
2690238	AATWELL	08-FEB-2014 10:41	

Batch Id RTR14-00018 **Container Id** 10255797 **Analysis Id** 0000094737

Container Type C drum, 83 Gallon **Analysis Status** Pass

RTR Date 08-FEB-2014 11:02 **Gross Weight** 240.345 Lbs. **Net Weight** 96.345 Lbs

Equipment Z-213-106 **Waste Matrix Code** S5300 **IDC** RF-330 Paper and Rags-Dry

Recording Id 2RTR14-00011 **Procedure Id** INST-OI-12 **Revision** 52 **Approval Level** SPM

Is Test Pattern Resolution Ok? Yes **Start Side** A **Replicate** No **OIO** No

Audio Visual Ok? Yes **Operator** AATWELL

Result Comment Waste is primarily cellulosics in the form of PPE, paper amd rags.

Package

IDC Correct Yes **Recommended IDC** **Summary Category** S5000

Idc Change Reason

Rigid Liner Present? No **LinerType** NO LINER

Liner Punctured? N/A **Sharp Objects?** No

Liner Lid Present? No **Sharp Objects Are Protected?** Yes

Liner Lid Deformed? N/A **Layers Of Confinement** 3

Fill Factor 98

Bag Closure Method Twisted and Taped

Liquids

Liquid Present? No **Internal Container with Liquid** No

Internal Container with Liquid 0 pints **LA Candidate** No

Liquid Between Liner & Drum 0 pints **Containerized Liquid**

Total Liquid Amount 0 pints **Containerized Liquid Amt** 0 pints

Other Liquids 0 pints **Comment**

Prohibited Liquids Present No **Comment**

Contents-Drum or Box

	Value	Comment		Value	Comment
Lead?	Yes, Acceptable	TID	**Mercury Present?**	No	
Wet Cell Batteries?	No		**Explosives?**	No	
Prohibited Compressed Gases?	No		**PCBs Present?**	No	
Aerosol Cans?	No		**PCB Mass (lbs)**	0	
Non-Mixed Hazardous Waste Present?	No		**Sealed Containers Over 4L?**	No	

Non-Radionuclide Pyrophoric Materials Present? No

Waste exhibiting the characteristics of Ignitability, Corrosivity or Reactivity Present? No

Wastes Incompatible with backfill, seal and panel closure materials, container and packaging materials,shipping container or other wastes? No

Impenetrable Dense Objects? No

Waste Material Items

Packaging Materials

Material Item	Quantity	Unit	Unit Wt(lbs)	Item Wt(lbs)
Drum plastic bag	2.000	EACH	1.000	2.000
55-GAL DRUM (17c)	1.000	EACH	59.000	59.000

Waste Items byWeight

Material Item	Quantity	Unit	Unit Wt(lbs)	Item Wt(lbs)
Respirator masks with filter cartridges	1.000	EACH	15.000	15.000
lead TID	1.000	EACH	0.010	0.010
Plastic waste	1.000	EACH	5.000	5.000
Plastic bag for waste	1.000	EACH	0.250	0.250

Waste Items by Volume

Material Item	Quantity	Unit	Unit Wt(lbs)	Item Wt(lbs)

Batch Id RTR14-00018 **Container Id** 10255797 **Analysis Id** 0000094737

Waste Parameters

Waste Parameter	Remaining Weight %	Actual Weight Lbs
Iron-based Metals/Alloys	0.000	0.000
Aluminum-based Metals/Alloys	0.000	2.250
Other metals	0.000	0.010
Other Inorganic Materials	0.000	0.000
Cellulosics	100.000	76.835
Rubber	0.000	12.000
Plastic (Waste Materials)	0.000	5.250
Inorganic matrix	0.000	0.000
Organic matrix	0.000	0.000
Soils/gravel	0.000	0.000
Steel (packaging materials)	0.000	142.000
Plastic (packaging materials)	0.000	2.000
Cellulosics Packaging	0.000	0.000

Analysis Esignature History

Esig Approval Id	User Id	Esignature Date	Comment
2690252	AATWELL	08-FEB-2014 11:02	

Batch Id RTR14-00018 **Container Id** 10335408 **Analysis Id** 0000094739

Container Type C drum, 83 Gallon **Analysis Status** Pass

RTR Date 08-FEB-2014 11:26 **Gross Weight** 264.600 **Lbs.** **Net Weight** 120.600 **Lbs**

Equipment Z-213-106 **Waste Matrix Code** S5112 **IDC** RF-480 Non-special Source Metal

Recording Id 2RTR14-00011 **Procedure Id** INST-OI-12 **Revision** 52 **Approval Level** SPM

Is Test Pattern Resolution Ok? Yes **Start Side** A **Replicate** No **OIO** No

Audio Visual Ok? Yes **Operator** AATWELL

Result Comment Waste is primarily metal debris, cans, paint cans, electrical cercuit boards, scissors, tweezers and misc metal debris.
AK does not concur with the recommended IDC UN-00B for container 10335408 because waste is RF debris. Instead, AK recommends an IDC of RF-480. CHD 2/11/14
AK rework recommended IDC RF-480 per AK. JED 02/11/14
AK concurs with the recommended IDC, RF-480, for container 10335408. No AKR or NCR is necessary. CHD 02/11/14

Package

IDC Correct Yes **Recommended IDC** RF-480 **Summary Category** S5000

Idc Change Reason Per AK

Rigid Liner Present? No **LinerType** NO LINER

Liner Punctured? N/A **Sharp Objects?** No

Liner Lid Present? No **Sharp Objects Are Protected?** Yes

Liner Lid Deformed? N/A **Layers Of Confinement** 3

Fill Factor 95

Bag Closure Method Twisted and Taped

Liquids

Liquid Present? No **Internal Container with Liquid** No

Internal Container with Liquid 0 pints **LA Candidate** No

Liquid Between Liner & Drum 0 pints **Containerized Liquid**

Total Liquid Amount 0 pints **Containerized Liquid Amt** 0 pints

Other Liquids 0 pints **Comment**

Prohibited Liquids Present No **Comment**

Contents-Drum or Box

	Value	Comment		Value	Comment
Lead?	No		**Mercury Present?**	No	
Wet Cell Batteries?	No		**Explosives?**	No	
Prohibited Compressed Gases?	No		**PCBs Present?**	No	
Aerosol Cans?	No		**PCB Mass (lbs)**	0	
Non-Mixed Hazardous Waste Present?	No		**Sealed Containers Over 4L?**	No	

Non-Radionuclide Pyrophoric Materials Present? No

Waste exhibiting the characteristics of Ignitability, Corrosivity or Reactivity Present? No

Wastes Incompatible with backfill, seal and panel closure materials, container and packaging materials,shipping container or other wastes? No

Impenetrable Dense Objects? No

Waste Material Items

Packaging Materials

Material Item	Quantity	Unit	Unit Wt(lbs)	Item Wt(lbs)
Drum plastic bag	2.000	EACH	1.000	2.000
55-GAL DRUM (17c)	1.000	EACH	59.000	59.000

Waste Items byWeight

Material Item	Quantity	Unit	Unit Wt(lbs)	Item Wt(lbs)
Battery pack	2.000	EACH	5.000	10.000
plastic waste	1.000	EACH	5.000	5.000
Cardboard liner	1.000	EACH	4.000	4.000
Plastic bag for waste	1.000	EACH	0.250	0.250

Batch Id RTR14-00018 **Container Id** 10335408 **Analysis Id** 0000094739

Waste Items by Volume

Material Item	Quantity	Unit	Unit Wt(lbs)	Item Wt(lbs)
Oil-Dri (Inside 55 gal drum)	6.000	PINTS	0.420	2.520

Waste Parameters

Waste Parameter	Remaining Weight %	Actual Weight Lbs
Iron-based Metals/Alloys	100.000	98.830
Aluminum-based Metals/Alloys	0.000	0.000
Other metals	0.000	10.000
Other Inorganic Materials	0.000	2.520
Cellulosics	0.000	4.000
Rubber	0.000	0.000
Plastic (Waste Materials)	0.000	5.250
Inorganic matrix	0.000	0.000
Organic matrix	0.000	0.000
Soils/gravel	0.000	0.000
Steel (packaging materials)	0.000	142.000
Plastic (packaging materials)	0.000	2.000
Cellulosics Packaging	0.000	0.000

Analysis Esignature History

Esig Approval Id	User Id	Esignature Date	Comment
2692553	CHINKLE	11-FEB-2014 14:36	Batch is promoted. chd 02/11/14
2692463	JDUKE	11-FEB-2014 13:25	Ak rework
2692165	CHINKLE	11-FEB-2014 05:48	This batch is returned for rework. AK does not concur with the recommended IDC change for containers 10341363, 10335408, 10334056, 10330378, 10330235, 10328833, 10326752 and 10229803. CHD 2/11/14
2690260	AATWELL	08-FEB-2014 11:26	

Batch Id RTR14-00018 **Container Id** 10255797 **Analysis Id** 0000094741

Container Type C drum, 83 Gallon **Analysis Status** Pass

RTR Date 08-FEB-2014 11:42 **Gross Weight** 240.345 **Lbs.** **Net Weight** 96.345 **Lbs**

Equipment Z-213-106 **Waste Matrix Code** S5300 **IDC** RF-330 Paper and Rags-Dry

Recording Id 2RTR14-00011 **Procedure Id** INST-OI-12 **Revision** 52 **Approval Level** SPM

Is Test Pattern Resolution Ok? Yes **Start Side** A **Replicate** No **OIO** Yes

Audio Visual Ok? Yes **Operator** KKEARN

Result Comment Waste consists of wipes, towels, and rags

Package

IDC Correct Yes **Recommended IDC** **Summary Category** S5000

Idc Change Reason

Rigid Liner Present? No **LinerType** NO LINER

Liner Punctured? N/A **Sharp Objects?** No

Liner Lid Present? No **Sharp Objects Are Protected?** Yes

Liner Lid Deformed? N/A **Layers Of Confinement** 3

Fill Factor 98

Bag Closure Method Twisted and Taped

Liquids

Liquid Present? No **Internal Container with Liquid** No

Internal Container with Liquid 0 pints **LA Candidate** No

Liquid Between Liner & Drum 0 pints **Containerized Liquid**

Total Liquid Amount 0 pints **Containerized Liquid Amt** 0 pints

Other Liquids 0 pints **Comment**

Prohibited Liquids Present No **Comment**

Contents-Drum or Box

	Value	Comment		Value	Comment
Lead?	Yes, Acceptable	TID	**Mercury Present?**	No	
Wet Cell Batteries?	No		**Explosives?**	No	
Prohibited Compressed Gases?	No		**PCBs Present?**	No	
Aerosol Cans?	No		**PCB Mass (lbs)**	0	
Non-Mixed Hazardous Waste Present?	No		**Sealed Containers Over 4L?**	No	

Non-Radionuclide Pyrophoric Materials Present? No

Waste exhibiting the characteristics of Ignitability, Corrosivity or Reactivity Present? No

Wastes Incompatible with backfill, seal and panel closure materials, container and packaging materials,shipping container or other wastes? No

Impenetrable Dense Objects? No

Waste Material Items

Packaging Materials

Material Item	Quantity	Unit	Unit Wt(lbs)	Item Wt(lbs)
Drum plastic bag	2.000	EACH	1.000	2.000
55-GAL DRUM (17c)	1.000	EACH	59.000	59.000

Waste Items byWeight

Material Item	Quantity	Unit	Unit Wt(lbs)	Item Wt(lbs)
TID	1.000	EACH	0.100	0.100
plastic bags and sheeting	1.000	EACH	8.000	8.000
resirators w/ cartridges	8.000	EACH	2.000	16.000
Plastic bag for waste	1.000	EACH	0.250	0.250

Waste Items by Volume

Material Item	Quantity	Unit	Unit Wt(lbs)	Item Wt(lbs)

Batch Id RTR14-00018 **Container Id** 10255797 **Analysis Id** 0000094741

Waste Parameters

Waste Parameter	Remaining Weight %	Actual Weight Lbs
Iron-based Metals/Alloys	0.000	0.000
Aluminum-based Metals/Alloys	0.000	2.400
Other metals	0.000	0.100
Other Inorganic Materials	0.000	0.000
Cellulosics	100.000	72.795
Rubber	0.000	12.800
Plastic (Waste Materials)	0.000	8.250
Inorganic matrix	0.000	0.000
Organic matrix	0.000	0.000
Soils/gravel	0.000	0.000
Steel (packaging materials)	0.000	142.000
Plastic (packaging materials)	0.000	2.000
Cellulosics Packaging	0.000	0.000

RTR Independent Observation

Obsolete	Performed	User Name	Checklist	Answer
No	16-FEB-2014 09:12	CSIMMONS	1.Was an independent observation performed?	Yes
			2.Were all items on the recording media identified correctly in WTS?	Yes
			3.Do you agree with the operator?	Yes

Comment There were minor differences between the exams; these differences don't affect the DQOs or disposition of the drum.

Independent Observation Esignature History

Esig Approval Id	User Id	Esignature Date	Comment
2696235	CSIMMONS	16-FEB-2014 09:12	OIO checklist complete.

Analysis Esignature History

Esig Approval Id	User Id	Esignature Date	Comment
2690266	KKEARN	08-FEB-2014 11:42	

Batch Id RTR14-00018 **Container Id** 10087582 **Analysis Id** 0000094743

Container Type C drum, 83 Gallon **Analysis Status** Pass

RTR Date 08-FEB-2014 12:29 **Gross Weight** 222.705 **Lbs.** **Net Weight** 62.705 **Lbs**

Equipment Z-213-106 **Waste Matrix Code** S5300 **IDC** RF-337 Plastics, Teflon, Washables, PVC

Recording Id 2RTR14-00011 **Procedure Id** INST-OI-12 **Revision** 52 **Approval Level** SPM

Is Test Pattern Resolution Ok? Yes **Start Side** A **Replicate** No **OIO** No

Audio Visual Ok? Yes **Operator** AATWELL

Result Comment Waste is primarily plastic in the form of poly bottles and bagging.

Package

IDC Correct Yes **Recommended IDC** **Summary Category** S5000

Idc Change Reason

Rigid Liner Present? Yes **LinerType** TYPE 1

Liner Punctured? Yes **Sharp Objects?** No

Liner Lid Present? Yes **Sharp Objects Are Protected?** Yes

Liner Lid Deformed? No **Layers Of Confinement** 3

Fill Factor 95

Bag Closure Method Twisted and Taped

Liquids

Liquid Present? Yes **Internal Container with Liquid** Yes

Internal Container with Liquid .05 pints **LA Candidate** No

Liquid Between Liner & Drum 0 pints **Containerized Liquid**

Total Liquid Amount .05 pints **Containerized Liquid Amt** 0 pints

Other Liquids 0 pints **Comment** 3 poly bottles with small amounts of liquid in them, 2 with aprox .01 pints in each and 1 with aprox .03 pints

Prohibited Liquids Present No **Comment**

Contents-Drum or Box

	Value	Comment		Value	Comment
Lead?	No		**Mercury Present?**	No	
Wet Cell Batteries?	No		**Explosives?**	No	
Prohibited Compressed Gases?	No		**PCBs Present?**	No	
Aerosol Cans?	No		**PCB Mass (lbs)**	0	
Non-Mixed Hazardous Waste Present?	No		**Sealed Containers Over 4L?**	No	

Non-Radionuclide Pyrophoric Materials Present? No

Waste exhibiting the characteristics of Ignitability, Corrosivity or Reactivity Present? No

Wastes Incompatible with backfill, seal and panel closure materials, container and packaging materials,shipping container or other wastes? No

Impenetrable Dense Objects? No

Waste Material Items

Packaging Materials

Material Item	Quantity	Unit	Unit Wt(lbs)	Item Wt(lbs)
90 mil liner	1.000	EACH	16.000	16.000
Drum plastic bag	2.000	EACH	1.000	2.000
55-GAL DRUM (17c)	1.000	EACH	59.000	59.000

Waste Items byWeight

Material Item	Quantity	Unit	Unit Wt(lbs)	Item Wt(lbs)
Plastic bag for waste	1.000	EACH	0.250	0.250

Waste Items by Volume

Material Item	Quantity	Unit	Unit Wt(lbs)	Item Wt(lbs)
Oil-Dri (Inside 55 gal drum)	8.000	PINTS	0.420	3.360
Liquids for Other Inorganics	0.050	PINTS	1.000	0.050

Batch Id RTR14-00018 **Container Id** 10087582 **Analysis Id** 0000094743

Waste Parameters

Waste Parameter	Remaining Weight %	Actual Weight Lbs
Iron-based Metals/Alloys	0.000	0.000
Aluminum-based Metals/Alloys	0.000	0.000
Other metals	0.000	0.000
Other Inorganic Materials	0.000	3.410
Cellulosics	0.000	0.000
Rubber	0.000	0.000
Plastic (Waste Materials)	100.000	59.295
Inorganic matrix	0.000	0.000
Organic matrix	0.000	0.000
Soils/gravel	0.000	0.000
Steel (packaging materials)	0.000	142.000
Plastic (packaging materials)	0.000	18.000
Cellulosics Packaging	0.000	0.000

Analysis Esignature History

Esig Approval Id	User Id	Esignature Date	Comment
2690291	AATWELL	08-FEB-2014 12:29	

Batch Id RTR14-00018 **Container Id** 10316810 **Analysis Id** 0000094745

Container Type C drum, 83 Gallon **Analysis Status** Pass

RTR Date 08-FEB-2014 13:33 **Gross Weight** 158.760 **Lbs.** **Net Weight** 16.760 **Lbs**

Equipment Z-213-106 **Waste Matrix Code** S5490 **IDC** RF-750 Pits 11 & 12 Debris

Recording Id 2RTR14-00011 **Procedure Id** INST-OI-12 **Revision** 52 **Approval Level** SPM

Is Test Pattern Resolution Ok? Yes **Start Side** A **Replicate** No **OIO** No

Audio Visual Ok? Yes **Operator** KKEARN

Result Comment Waste consists of metal shavings and filings

Package

IDC Correct Yes **Recommended IDC** **Summary Category** S5000

Idc Change Reason

Rigid Liner Present? No **LinerType** NO LINER

Liner Punctured? N/A **Sharp Objects?** No

Liner Lid Present? No **Sharp Objects Are Protected?** Yes

Liner Lid Deformed? N/A **Layers Of Confinement** 0

Fill Factor 98

Bag Closure Method No Bags

Liquids

Liquid Present? No **Internal Container with Liquid** No

Internal Container with Liquid 0 pints **LA Candidate** No

Liquid Between Liner & Drum 0 pints **Containerized Liquid**

Total Liquid Amount 0 pints **Containerized Liquid Amt** 0 pints

Other Liquids 0 pints **Comment**

Prohibited Liquids Present No **Comment**

Contents-Drum or Box

	Value	Comment		Value	Comment
Lead?	No		**Mercury Present?**	No	
Wet Cell Batteries?	No		**Explosives?**	No	
Prohibited Compressed Gases?	No		**PCBs Present?**	No	
Aerosol Cans?	No		**PCB Mass (lbs)**	0	
Non-Mixed Hazardous Waste Present?	No		**Sealed Containers Over 4L?**	No	

Non-Radionuclide Pyrophoric Materials Present? No

Waste exhibiting the characteristics of Ignitability, Corrosivity or Reactivity Present? No

Wastes Incompatible with backfill, seal and panel closure materials, container and packaging materials,shipping container or other wastes? No

Impenetrable Dense Objects? No

Waste Material Items

Packaging Materials

Material Item	Quantity	Unit	Unit Wt(lbs)	Item Wt(lbs)
55-GAL DRUM (17c)	1.000	EACH	59.000	59.000

Waste Items byWeight

Material Item	Quantity	Unit	Unit Wt(lbs)	Item Wt(lbs)

Waste Items by Volume

Material Item	Quantity	Unit	Unit Wt(lbs)	Item Wt(lbs)

Batch Id RTR14-00018 **Container Id** 10316810 **Analysis Id** 0000094745

Waste Parameters

Waste Parameter	Remaining Weight %	Actual Weight Lbs
Iron-based Metals/Alloys	100.000	16.760
Aluminum-based Metals/Alloys	0.000	0.000
Other metals	0.000	0.000
Other Inorganic Materials	0.000	0.000
Cellulosics	0.000	0.000
Rubber	0.000	0.000
Plastic (Waste Materials)	0.000	0.000
Inorganic matrix	0.000	0.000
Organic matrix	0.000	0.000
Soils/gravel	0.000	0.000
Steel (packaging materials)	0.000	142.000
Plastic (packaging materials)	0.000	0.000
Cellulosics Packaging	0.000	0.000

Analysis Esignature History

Esig Approval Id	User Id	Esignature Date	Comment
2690307	KKEARN	08-FEB-2014 13:33	

Batch Id RTR14-00018 **Container Id** 10174589 **Analysis Id** 0000094747

Container Type C drum, 83 Gallon **Analysis Status** Pass

RTR Date 08-FEB-2014 13:56 **Gross Weight** 293.265 **Lbs.** **Net Weight** 133.265 **Lbs**

Equipment Z-213-106 **Waste Matrix Code** S5320 **IDC** RF-970 Wood

Recording Id 2RTR14-00011 **Procedure Id** INST-OI-12 **Revision** 52 **Approval Level** SPM

Is Test Pattern Resolution Ok? Yes **Start Side** A **Replicate** No **OIO** No

Audio Visual Ok? Yes **Operator** KKEARN

Result Comment Waste consists of plywood

Package

IDC Correct Yes **Recommended IDC** **Summary Category** S5000

Idc Change Reason

Rigid Liner Present? Yes **LinerType** TYPE 1

Liner Punctured? Yes **Sharp Objects?** No

Liner Lid Present? Yes **Sharp Objects Are Protected?** Yes

Liner Lid Deformed? No **Layers Of Confinement** 3

Fill Factor 98

Bag Closure Method Twisted and Taped

Liquids

Liquid Present? No **Internal Container with Liquid** No

Internal Container with Liquid 0 pints **LA Candidate** No

Liquid Between Liner & Drum 0 pints **Containerized Liquid**

Total Liquid Amount 0 pints **Containerized Liquid Amt** 0 pints

Other Liquids 0 pints **Comment**

Prohibited Liquids Present No **Comment**

Contents-Drum or Box

	Value	Comment		Value	Comment
Lead?	No		**Mercury Present?**	No	
Wet Cell Batteries?	No		**Explosives?**	No	
Prohibited Compressed Gases?	No		**PCBs Present?**	No	
Aerosol Cans?	No		**PCB Mass (lbs)**	0	
Non-Mixed Hazardous Waste Present?	No		**Sealed Containers Over 4L?**	No	

Non-Radionuclide Pyrophoric Materials Present? No

Waste exhibiting the characteristics of Ignitability, Corrosivity or Reactivity Present? No

Wastes Incompatible with backfill, seal and panel closure materials, container and packaging materials,shipping container or other wastes? No

Impenetrable Dense Objects? No

Waste Material Items

Packaging Materials

Material Item	Quantity	Unit	Unit Wt(lbs)	Item Wt(lbs)
90 mil liner	1.000	EACH	16.000	16.000
Drum plastic bag	2.000	EACH	1.000	2.000
55-GAL DRUM (17c)	1.000	EACH	59.000	59.000

Waste Items byWeight

Material Item	Quantity	Unit	Unit Wt(lbs)	Item Wt(lbs)
nails	1.000	EACH	1.000	1.000
plastic bags and sheeting	1.000	EACH	20.000	20.000
Plastic bag for waste	1.000	EACH	0.250	0.250

Waste Items by Volume

Material Item	Quantity	Unit	Unit Wt(lbs)	Item Wt(lbs)
Oil-Dri (Inside 55 gal drum)	4.000	PINTS	0.420	1.680

Batch Id RTR14-00018 **Container Id** 10174589 **Analysis Id** 0000094747

Waste Parameters

Waste Parameter	Remaining Weight %	Actual Weight Lbs
Iron-based Metals/Alloys	0.000	1.000
Aluminum-based Metals/Alloys	0.000	0.000
Other metals	0.000	0.000
Other Inorganic Materials	0.000	1.680
Cellulosics	100.000	110.335
Rubber	0.000	0.000
Plastic (Waste Materials)	0.000	20.250
Inorganic matrix	0.000	0.000
Organic matrix	0.000	0.000
Soils/gravel	0.000	0.000
Steel (packaging materials)	0.000	142.000
Plastic (packaging materials)	0.000	18.000
Cellulosics Packaging	0.000	0.000

Analysis Esignature History

Esig Approval Id	User Id	Esignature Date	Comment
2690318	KKEARN	08-FEB-2014 13:56	

End of RTR Analysis Report

AMWTP
Advanced Mixed Waste Treatment Project

AMWTP

RTR Replicate Comparison Report

Date: 11-Sep-2014

Time: 07:35

RTR Batch Id: RTR14-00018 **Container Id:** 10330364 **Equipment Id:** Z-213-106

Container type Description: **drum, 83 Gallon** Gen-IDC: **RF-960** Gross Weight(Lbs): **632.835**

	Original Analysis		Replicate Analysis	
Analysis Id / Date:	0000094710	07-FEB-2014 12:09	0000094715	07-FEB-2014 13:26
Procedure /Revision:	INST-OI-12	52	INST-OI-12	52
Recording Media Id:	2RTR14-00011		2RTR14-00011	
Starting Position:	A		A	
Is Test Pattern Resolution Ok?	Y		Y	
Audio Visual Ok?	Y		Y	
Personnel Name:	DANNY GREEN		AARON ATWELL	
IDC Ok? / Recommended IDC:	Y		Y	
IDC Change Reason:				
Summary Category / Waste matrix Code:	S5000	S5490	S5000	S5490
Packaging				
Rigid Liner Present?	N		N	
Liner Type Code:	NO LINER		NO LINER	
Liner Punctured:	NA		NA	
Liner Lid Deformed:	NA		NA	
Layers Of Confinement:	2		2	
Sharp Objects?	N		N	
Sharp Objects Protected?	Y		Y	
Fill Factor(%):	90		95	
Bag Closure Method:	Twisted and Taped		Twisted and Taped	
Liner Lid Present?:	N		N	
Liquids: (Volume in Pints)				
Liquid Present?	N		N	
Internal Container with Liquid?	0		0	
Containerized Liquid	N		N	
Other Liquids:	0		0	
Internal Container with Liquid Amt:	0		0	
Liquid Between Liner and Drum:	0		0	
Containerized Liquid:	0		0	
Total Liquid Amount:	0		0	
LA Candidate?	N		N	
Prohibited Liquids Present	N		N	

Contents:	Y/N	Comments	Y/N	Comments
Sealed Containers over 4L?	N		N	
Lead Present?	N		N	
Explosives Present?	N		N	
Mercury Present?	N		N	
Wet Cell Batteries Detected?	N		N	

RTR Replicate Comparison Report

Advanced Mixed Waste Treatment Project

RTR Batch Id: RTR14-00018 **Container Id:** 10330364 **Equipment Id:** Z-213-106

	Original Analysis		Replicate Analysis	
Prohibited Compressed Gas Present?	N		N	
PCBs Present?	N		N	
PCB Mass (lbs)	0		0	
Non-Radionuclide Pyrophoric Materials Present?	N		N	
Waste exhibiting the characteristics of ignitability, Corrosivity or reactivity Present?	N		N	
Non-Mixed Hazardous Waste Present?	N		N	
Waste Incompatibles with backfill, Seal and panel closure materials, container and packaging material, shipping container or other wastes?	N		N	
Impenetrable Dense Objects?	Y	An area 12-14" x 16" near the center of the drum is impenetrable - appears to be due to pulverized concrete.	Y	aprox 50% of the waste in this container is impenetrable
Result Comment:	Waste consists of concrete chunks.		Waste appears to be construction rubble in the form of busted up concrete.	

E-signature

Esig Approval ID	User ID	Signature Date	Comment
2695639	CSIMMONS	15-FEB-14	Signed replicate comparison.

-----End of RTR Replicate Comparison Report-----

DIVIDER

PAGE

AMWTP
Advanced Mixed Waste Treatment Project

AMWTP

Batch Report Coversheet

Date: 11-Sep-2014

Time: 07:56

Batch Type Real Time Radiography
Batch Report No. RTR14-00037
Batch Id RTR14-00037
Open Date 22-FEB-14 17:31:39
Close Date 24-FEB-14 17:03:15
Batch Status AP
Test Facility Idaho AMWTP
Equipment Id Z-213-101 RTR Station Left (213-101)

Container Id	IDC	Analysis Id	Date Examined	QC Type	Analysis Status	Operator
10020294	RF-480	0000095117	22-FEB-14 17:31:39	Original	P	SETH OLDHAM
10288404	SD-177	0000095132	23-FEB-14 15:26:20	Original	P	SETH OLDHAM
10289408	RF-747	0000095133	23-FEB-14 15:55:05	Original	P	CRAIG SIMMONS
10288396	RF-750	0000095135	23-FEB-14 16:14:33	Original	P	SETH OLDHAM
10174681	RF-463	0000095137	23-FEB-14 17:05:47	Original	P	SETH OLDHAM
10512134	RF-003	0000095140	23-FEB-14 17:46:59	Original	P	SETH OLDHAM
10512142	RF-760	0000095141	24-FEB-14 08:23:23	Original	P	SETH OLDHAM
10187513	RF-960	0000095142	24-FEB-14 08:41:41	Original	P	SETH OLDHAM
10416210	RF-003	0000095145	24-FEB-14 09:09:33	Original	P	SETH OLDHAM
10350105	RF-330	0000095146	24-FEB-14 10:36:16	Original	P	SETH OLDHAM
10510756	RF-003	0000095149	24-FEB-14 11:29:40	Original	P	CRAIG SIMMONS
10333865	SD-177	0000095150	24-FEB-14 11:48:55	Original	P	SETH OLDHAM
10512448	BN-524	0000095153	24-FEB-14 12:31:48	Original	P	CRAIG SIMMONS
10333865	SD-177	0000095154	24-FEB-14 12:57:23	RTR OIO	P	KENT KEARN
10510756	RF-003	0000095155	24-FEB-14 13:11:17	Replicate / Duplicate	P	KENT KEARN
10510769	BN-511	0000095157	24-FEB-14 13:49:15	Original	P	CRAIG SIMMONS
10512141	RF-760	0000095161	24-FEB-14 14:46:03	Original	P	SETH OLDHAM
10498328	RF-760	0000095162	24-FEB-14 15:07:56	Original	P	KENT KEARN
10512153	RF-760	0000095164	24-FEB-14 15:18:47	Original	P	SETH OLDHAM
10511993	RF-760	0000095165	24-FEB-14 15:53:42	Original	P	SETH OLDHAM
10267983	RF-750	0000095169	24-FEB-14 16:49:16	Original	P	KENT KEARN
10264320	RF-750	0000095170	24-FEB-14 17:02:14	Original	P	KENT KEARN

INFORMATION ONLY

**********Batch Comments**********

Written By	Date	Comment
CHINKLE	27-FEB-14 13:50:01	27-FEB-14 CHINKLE AKE This batch is returned for rework. AK does not concur with the recommended IDC change for containers 10512448, 10512153, 10512142, 10512141, 10511993, 10333865, 10289408, 10288404. CHD 2/27/14
SOLDHAM	05-MAR-14 15:31:40	Rework complete.
CHINKLE	06-MAR-14 07:44:50	27-FEB-14 CHINKLE AKE This batch is returned for rework. AK does not concur with the recommended IDC change for containers 10512448, 10512153, 10512142, 10512141, 10511993, 10333865, 10289408, 10288404. CHD 2/27/14 06-MAR-14 CHINKLE AKE Batch is promoted. chd 3/6/14
DLEE	20-MAR-14 14:45:21	Rework drum 10510769 Operator needs to add more to the waste description in the results comment section. Also please add a comment that the top of the 55 gal drum is very rusty with holes. Please review and correct as necessary.
DLEE	20-MAR-14 14:45:21	Rework drum 10512448 After reviewing the A/V recording with RTR SME the transformers appear to be solid dry transformers that are not PCB waste. Correct the Liquid section Prohibited Liquids Present to No due to there not being any PCBs and 0.20 pint is not a prohibited amount of liquid and correct the PCBs Present to no. Also please add a correct transformers comment in the results comment to solid dry transformer, Not PCB waste. Please review and correct as necessary.
DLEE	20-MAR-14 14:45:21	Rework Original of Replicate drum 10510756 Operator needs to remove one drum bag from packaging in the waste parameters and correct Layers of Confinement from 2 to 1. Please review and correct as necessary.
DLEE	20-MAR-14 14:45:21	This batch was validated to MP-TRUW-8.8.
DLEE	20-MAR-14 14:45:21	Rework drum 10289408 Operator needs to correct the remaining waste parameter from 100% Organic Matrix to 100% Inorganic Matrix per TRUW-05. Plus with the IDC change to a RF-747 PCBs Present needs corrected to No. Please review and correct as necessary.
DLEE	20-MAR-14 14:52:36	Demote to Operations for rework.
CSIMMONS	20-MAR-14 16:03:17	Rework complete.
DLEE	20-MAR-14 17:22:07	Rework completed to satisfaction. Promote to SPM.
RWALKER	25-MAR-14 11:11:26	Container 10510756; the ITR requested rework to (remove one drum bag from packaging in the waste parameters and correct Layers of Confinement from 2 to 1). After the rework was completed the Net Weight of the container changed. The PCB Mass needs to be corrected. Please review and rework the data.
RWALKER	25-MAR-14 11:11:27	Demoted batch back to ITR level for operator rework.
DLEE	26-MAR-14 06:10:47	Demote to Operations for rework.
CSIMMONS	26-MAR-14 08:32:18	Rework complete.
DLEE	26-MAR-14 10:40:45	Rework completed to satisfaction. Promote to SPM.
RWALKER	26-MAR-14 12:12:48	SPM validation complete. Promote batch.

**********Batch E-Signature History**********

Approval ID	User ID	Signature Date	Comment
2711114	SOLDHAM	05-MAR-2014 15:31:40	Rework complete.
2719890	DLEE	20-MAR-2014 14:52:36	Demote to Operations for rework.
2719966	CSIMMONS	20-MAR-2014 16:03:17	Rework complete.
2720057	DLEE	20-MAR-2014 17:22:07	Rework completed to satisfaction. Promote to SPM.
2722107	RWALKER	25-MAR-2014 11:11:27	Demoted batch back to ITR level for operator rework.
2722678	DLEE	26-MAR-2014 06:10:47	Demote to Operations for rework.
2722686	CSIMMONS	26-MAR-2014 08:32:18	Rework complete.
2722778	DLEE	26-MAR-2014 10:40:45	Rework completed to satisfaction. Promote to SPM.
2722845	RWALKER	26-MAR-2014 12:12:49	SPM validation complete. Promote batch.

***** End of Batch Report Coversheet Report *****

AMWTP
Advanced Mixed Waste Treatment Project

AMWTP

Non-Conformance Report

Date: 11-Sep-2014

Time: 07:56

*****Batch NCR(s)*****

Batch Type	RTR	Batch ID	RTR14-00037		
Trackwise Number		**Status**		**Opened Date**	**Closed Date**

*****Container NCR(s)*****

Container ID *or related Batch ID*	Trackwise Number	Status	Opened Date	Closed Date
10020294	7539	CLOSED	04-JUL-04	26-MAR-14
10020294	83979	OPEN	22-FEB-14	
10020294	83980	OPEN	22-FEB-14	
10174681	83998	OPEN	23-FEB-14	
10187513	84009	CLOSED	24-FEB-14	15-JUL-14
10267983	84025	OPEN	24-FEB-14	
10289408	83995	OPEN	23-FEB-14	
10416210	59463	CLOSED	11-FEB-11	25-MAR-14
10512134	84001	CLOSED	23-FEB-14	25-MAR-14
10512134	84002	CLOSED	23-FEB-14	01-MAY-14
10512448	84019	CLOSED	24-FEB-14	25-MAR-14

*****End of Non-Conformance Report*****

AMWTP
Advanced Mixed Waste Treatment Project

AMWTP

Checklist Report

Date: 11-Sep-2014
Time: 07:56

Batch Id RTR14-00037 **Open Date** 22-FEB-14 **Close Date** 24-FEB-14

Reviewer DENISE LEE **Approval Level** Independent Technical Reviewer
Approval Date 20-MAR-14 **Review Iteration** 1

Question Text	Answer	Requirement	Comment
1. Is the Batch Data Report (BDR) and Quality Assurance (QA) documentation complete with the following: o Real-Time Radiography (RTR) Batch Coversheet o Table of Contents (manual review only) o RTR Analysis reports o Replicate Scan o Replicate Comparison o Independent Observation o ITR checklist (Form-1412, manual review only) o Form-1491, Batch Data Report Supplemental Comment Form (manual review only) o Associated NCRs (referenced in Waste Tracking System [WTS]) o Audio/Video Recording References?	Yes		
2. Are there 20 containers or less in the batch?	Yes		
3. Was the image quality indicator (IQI) satisfactory?	Yes		
4. Does every container in the batch reference an audio/video recording?	Yes		
5. Is there a completed radiography data analysis for each container in the batch?	Yes		
6. Was each RTR Operator qualified at the time of the radiography event?	Yes		
7. Was the data generated in a technically correct manner using the correct revision of INST-OI-12, Real-Time Radiography Operations (Drum)?	No		See batch comments
8. Was the correct procedure and revision documented on all analysis reports?	Yes		
9. Has the E-signature History review been performed?	Yes		
10. Does the RTR operator confirm that the physical form matched the waste stream description and waste matrix code?	Yes		
11. Does the packaging weight plus the net weight equal the gross weight of the container in the estimated waste material parameters?	Yes		
12. Were all entries into the waste material items section assigned to the correct waste material parameters?	Yes		
13. Has the description of rigid liners and layers of confinement been properly documented, as applicable?	No		See batch comments
14. Was the presence or absence of prohibited items properly documented?	No		See batch comments
15. If prohibited items were identified, have appropriate nonconformance reports (NCRs) been generated?	Yes		
16. Were the containers examined between October and April in compliance with the preheat requirements?	Yes		
17. Were all proper units and significant figures used for all reported volumes/weights?	Yes		
18. Was there a valid replicate scan performed (at least one container per day, or once per testing batch, whichever is less frequent)? o Record the container number, the replicate observation date in the comment section of this checklist. o Record any issues or concerns in the batch comment section.	Yes		Replicate Drum 10510756 was exam on 2/24/2014. Original Operator enters 2 Layers of Confinement and the Replicate Operator enters 1 Layer of Confinement. I agree with the Replicate Operator. There were other minor differences between the exams. These don't affect the disposition of the container or the DQOs. See batch comments for rework.
19. Was there a valid Operator Independent Observation (OIO) (not the replicate) performed (at least one container	Yes		OIO Drum 10333865 was exam 2/24/2014. There were minor differences between the exams. These don't

Batch Id RTR14-00037 **Open Date** 22-FEB-14 **Close Date** 24-FEB-14

Reviewer DENISE LEE **Approval Level** Independent Technical Reviewer
Approval Date 20-MAR-14 **Review Iteration** 1

Question Text	Answer	Requirement	Comment
per day, or once per testing batch, whichever is less frequent)? o Record the container number and the OIO date in the comment section of this checklist. o Record any issues or concerns in the batch comment section.			affect the disposition of the container or the DQOs.
20. Were any significant differences identified that would affect the original disposition of the replicate and OIO, or affect data quality objectives (DQOs)? If so, ensure an NCR was generated and WTS flagged.	No		
21. Were the RTR quality assurance objectives (QAOs) met? o Precision o Accuracy o Completeness o Comparability	No		See batch comments
22. Were any NCRs generated for containers containing prohibited items, or any non-conforming conditions that failed to meet DQOs or QAOs? o If so, include the NCRs, as appropriate, in the BDR.	Yes		
23. Were the rework requirements clearly identified in WTS or on the BDR?	Yes		

Batch Id RTR14-00037 **Open Date** 22-FEB-14 **Close Date** 24-FEB-14

Reviewer DENISE LEE **Approval Level** Independent Technical Reviewer

Approval Date 20-MAR-14 **Review Iteration** 2

Question Text	Answer	Requirement	Comment
1. Is the Batch Data Report (BDR) and Quality Assurance (QA) documentation complete with the following: o Real-Time Radiography (RTR) Batch Coversheet o Table of Contents (manual review only) o RTR Analysis reports o Replicate Scan o Replicate Comparison o Independent Observation o ITR checklist (Form-1412, manual review only) o Form-1491, Batch Data Report Supplemental Comment Form (manual review only) o Associated NCRs (referenced in Waste Tracking System [WTS]) o Audio/Video Recording References?	Yes		
2. Are there 20 containers or less in the batch?	Yes		
3. Was the image quality indicator (IQI) satisfactory?	Yes		
4. Does every container in the batch reference an audio/video recording?	Yes		
5. Is there a completed radiography data analysis for each container in the batch?	Yes		
6. Was each RTR Operator qualified at the time of the radiography event?	Yes		
7. Was the data generated in a technically correct manner using the correct revision of INST-OI-12, Real-Time Radiography Operations (Drum)?	Yes		
8. Was the correct procedure and revision documented on all analysis reports?	Yes		
9. Has the E-signature History review been performed?	Yes		
10. Does the RTR operator confirm that the physical form matched the waste stream description and waste matrix code?	Yes		
11. Does the packaging weight plus the net weight equal the gross weight of the container in the estimated waste material parameters?	Yes		
12. Were all entries into the waste material items section assigned to the correct waste material parameters?	Yes		
13. Has the description of rigid liners and layers of confinement been properly documented, as applicable?	Yes		
14. Was the presence or absence of prohibited items properly documented?	Yes		
15. If prohibited items were identified, have appropriate nonconformance reports (NCRs) been generated?	Yes		
16. Were the containers examined between October and April in compliance with the preheat requirements?	Yes		
17. Were all proper units and significant figures used for all reported volumes/weights?	Yes		
18. Was there a valid replicate scan performed (at least one container per day, or once per testing batch, whichever is less frequent)? o Record the container number, the replicate observation date in the comment section of this checklist. o Record any issues or concerns in the batch comment section.	Yes		Replicate Drum 10510756 was exam on 2/24/2014. Original Operator enters 2 Layers of Confinement and the Replicate Operator enters 1 Layer of Confinement. I agree with the Replicate Operator. There were other minor differences between the exams. These don't affect the disposition of the container or the DQOs. See batch comments for rework.
19. Was there a valid Operator Independent Observation (OIO) (not the replicate) performed (at least one container	Yes		OIO Drum 10333865 was exam 2/24/2014. There were minor differences between the exams. These don't

Batch Id RTR14-00037 **Open Date** 22-FEB-14 **Close Date** 24-FEB-14

Reviewer DENISE LEE **Approval Level** Independent Technical Reviewer

Approval Date 20-MAR-14 **Review Iteration** 2

Question Text	Answer	Requirement	Comment
per day, or once per testing batch, whichever is less frequent)? o Record the container number and the OIO date in the comment section of this checklist. o Record any issues or concerns in the batch comment section.			affect the disposition of the container or the DQOs.
20. Were any significant differences identified that would affect the original disposition of the replicate and OIO, or affect data quality objectives (DQOs)? If so, ensure an NCR was generated and WTS flagged.	No		
21. Were the RTR quality assurance objectives (QAOs) met? o Precision o Accuracy o Completeness o Comparability	Yes		
22. Were any NCRs generated for containers containing prohibited items, or any non-conforming conditions that failed to meet DQOs or QAOs? o If so, include the NCRs, as appropriate, in the BDR.	Yes		
23. Were the rework requirements clearly identified in WTS or on the BDR?	Yes		

Batch Id RTR14-00037 **Open Date** 22-FEB-14 **Close Date** 24-FEB-14

Reviewer DENISE LEE **Approval Level** Independent Technical Reviewer

Approval Date 26-MAR-14 **Review Iteration** 3

Question Text	Answer	Requirement	Comment
1. Is the Batch Data Report (BDR) and Quality Assurance (QA) documentation complete with the following: o Real-Time Radiography (RTR) Batch Coversheet o Table of Contents (manual review only) o RTR Analysis reports o Replicate Scan o Replicate Comparison o Independent Observation o ITR checklist (Form-1412, manual review only) o Form-1491, Batch Data Report Supplemental Comment Form (manual review only) o Associated NCRs (referenced in Waste Tracking System [WTS]) o Audio/Video Recording References?	Yes		
2. Are there 20 containers or less in the batch?	Yes		
3. Was the image quality indicator (IQI) satisfactory?	Yes		
4. Does every container in the batch reference an audio/video recording?	Yes		
5. Is there a completed radiography data analysis for each container in the batch?	Yes		
6. Was each RTR Operator qualified at the time of the radiography event?	Yes		
7. Was the data generated in a technically correct manner using the correct revision of INST-OI-12, Real-Time Radiography Operations (Drum)?	Yes		
8. Was the correct procedure and revision documented on all analysis reports?	Yes		
9. Has the E-signature History review been performed?	Yes		
10. Does the RTR operator confirm that the physical form matched the waste stream description and waste matrix code?	Yes		
11. Does the packaging weight plus the net weight equal the gross weight of the container in the estimated waste material parameters?	Yes		
12. Were all entries into the waste material items section assigned to the correct waste material parameters?	Yes		
13. Has the description of rigid liners and layers of confinement been properly documented, as applicable?	Yes		
14. Was the presence or absence of prohibited items properly documented?	Yes		
15. If prohibited items were identified, have appropriate nonconformance reports (NCRs) been generated?	Yes		
16. Were the containers examined between October and April in compliance with the preheat requirements?	Yes		
17. Were all proper units and significant figures used for all reported volumes/weights?	Yes		
18. Was there a valid replicate scan performed (at least one container per day, or once per testing batch, whichever is less frequent)? o Record the container number, the replicate observation date in the comment section of this checklist. o Record any issues or concerns in the batch comment section.	Yes		Replicate Drum 10510756 was exam on 2/24/2014. Original Operator enters 2 Layers of Confinement and the Replicate Operator enters 1 Layer of Confinement. I agree with the Replicate Operator. There were other minor differences between the exams. These don't affect the disposition of the container or the DQOs. See batch comments for rework.
19. Was there a valid Operator Independent Observation (OIO) (not the replicate) performed (at least one container	Yes		OIO Drum 10333865 was exam 2/24/2014. There were minor differences between the exams. These don't

Batch Id RTR14-00037 **Open Date** 22-FEB-14 **Close Date** 24-FEB-14

Reviewer DENISE LEE **Approval Level** Independent Technical Reviewer

Approval Date 26-MAR-14 **Review Iteration** 3

Question Text	Answer	Requirement	Comment
per day, or once per testing batch, whichever is less frequent)? o Record the container number and the OIO date in the comment section of this checklist. o Record any issues or concerns in the batch comment section.			affect the disposition of the container or the DQOs.
20. Were any significant differences identified that would affect the original disposition of the replicate and OIO, or affect data quality objectives (DQOs)? If so, ensure an NCR was generated and WTS flagged.	No		
21. Were the RTR quality assurance objectives (QAOs) met? o Precision o Accuracy o Completeness o Comparability	Yes		
22. Were any NCRs generated for containers containing prohibited items, or any non-conforming conditions that failed to meet DQOs or QAOs? o If so, include the NCRs, as appropriate, in the BDR.	Yes		
23. Were the rework requirements clearly identified in WTS or on the BDR?	Yes		

Batch Id RTR14-00037 **Open Date** 22-FEB-14 **Close Date** 24-FEB-14

Reviewer DENISE LEE **Approval Level** Independent Technical Reviewer
Approval Date 26-MAR-14 **Review Iteration** 4

Question Text	Answer	Requirement	Comment
1. Is the Batch Data Report (BDR) and Quality Assurance (QA) documentation complete with the following: o Real-Time Radiography (RTR) Batch Coversheet o Table of Contents (manual review only) o RTR Analysis reports o Replicate Scan o Replicate Comparison o Independent Observation o ITR checklist (Form-1412, manual review only) o Form-1491, Batch Data Report Supplemental Comment Form (manual review only) o Associated NCRs (referenced in Waste Tracking System [WTS]) o Audio/Video Recording References?	Yes		
2. Are there 20 containers or less in the batch?	Yes		
3. Was the image quality indicator (IQI) satisfactory?	Yes		
4. Does every container in the batch reference an audio/video recording?	Yes		
5. Is there a completed radiography data analysis for each container in the batch?	Yes		
6. Was each RTR Operator qualified at the time of the radiography event?	Yes		
7. Was the data generated in a technically correct manner using the correct revision of INST-OI-12, Real-Time Radiography Operations (Drum)?	Yes		
8. Was the correct procedure and revision documented on all analysis reports?	Yes		
9. Has the E-signature History review been performed?	Yes		
10. Does the RTR operator confirm that the physical form matched the waste stream description and waste matrix code?	Yes		
11. Does the packaging weight plus the net weight equal the gross weight of the container in the estimated waste material parameters?	Yes		
12. Were all entries into the waste material items section assigned to the correct waste material parameters?	Yes		
13. Has the description of rigid liners and layers of confinement been properly documented, as applicable?	Yes		
14. Was the presence or absence of prohibited items properly documented?	Yes		
15. If prohibited items were identified, have appropriate nonconformance reports (NCRs) been generated?	Yes		
16. Were the containers examined between October and April in compliance with the preheat requirements?	Yes		
17. Were all proper units and significant figures used for all reported volumes/weights?	Yes		
18. Was there a valid replicate scan performed (at least one container per day, or once per testing batch, whichever is less frequent)? o Record the container number, the replicate observation date in the comment section of this checklist. o Record any issues or concerns in the batch comment section.	Yes		Replicate Drum 10510756 was exam on 2/24/2014. Original Operator enters 2 Layers of Confinement and the Replicate Operator enters 1 Layer of Confinement. I agree with the Replicate Operator. There were other minor differences between the exams. These don't affect the disposition of the container or the DQOs. See batch comments for rework.
19. Was there a valid Operator Independent Observation (OIO) (not the replicate) performed (at least one container	Yes		OIO Drum 10333865 was exam 2/24/2014. There were minor differences between the exams. These don't

Batch Id RTR14-00037 **Open Date** 22-FEB-14 **Close Date** 24-FEB-14

Reviewer DENISE LEE **Approval Level** Independent Technical Reviewer
Approval Date 26-MAR-14 **Review Iteration** 4

Question Text	Answer	Requirement	Comment
per day, or once per testing batch, whichever is less frequent)? o Record the container number and the OIO date in the comment section of this checklist. o Record any issues or concerns in the batch comment section.			affect the disposition of the container or the DQOs.
20. Were any significant differences identified that would affect the original disposition of the replicate and OIO, or affect data quality objectives (DQOs)? If so, ensure an NCR was generated and WTS flagged.	No		
21. Were the RTR quality assurance objectives (QAOs) met? o Precision o Accuracy o Completeness o Comparability	Yes		
22. Were any NCRs generated for containers containing prohibited items, or any non-conforming conditions that failed to meet DQOs or QAOs? o If so, include the NCRs, as appropriate, in the BDR.	Yes		
23. Were the rework requirements clearly identified in WTS or on the BDR?	Yes		

Batch Id RTR14-00037 **Open Date** 22-FEB-14 **Close Date** 24-FEB-14

Reviewer REED WALKER **Approval Level** SPM Data Validation

Approval Date 25-MAR-14 **Review Iteration** 1

Question Text	Answer	Requirement	Comment
(1) Has the batch received a Data Generation Level Independent Technical Review?	Yes	MP-TRUW-8.2, C3-10b(1)	
(2) Is the Independent Technical Review checklist complete?	Yes	MP-TRUW-8.2, C3-10b(1)	
(3) When identified, were polychlorinated biphenyls (PCBs), mercury, lead, or other hazardous contaminants consistent with the waste stream acceptable knowledge (AK) Summary Report(s) and/or AK documentation?	Yes	MP-TRUW-8.2, C4-3	
(4) Are any ignitable, corrosive, or reactive wastes identified in this waste?	No	MP-TRUW-8.2, C4-3	
(5) Are the packaging configurations identified on the real-time radiography (RTR) consistent with the waste stream AK Summary Report(s) and/or AK documentation?	Yes	MP-TRUW-8.2, C4-3	
(6) Do the containers in this batch contain typical waste items consistent with waste stream AK Summary Report(s) and/or AK documentation?	Yes	MP-TRUW-8.2, C4-3	
(7) Are the Waste Matrix Codes (WMCs) and physical form descriptions consistent with AK?	Yes	MP-TRUW-8.2, C4-3	
(8) Have all AK discrepancies been resolved and have all AK Resolution checklists been approved? Reference all waste stream AK documentation used in review of this data package.	Yes	MP-TRUW-8.2, C4-3	RPT-TRUW-05, RPT-TRUW-06, RPT-TRUW-12, RPT-TRUW-56
(9) Have all applicable Quality Assurance Objectives (QAOs) been met, including precision, accuracy, completeness, and comparability, by using the appropriate acceptance criteria for each as specified in MP-TRUW-8.2, Quality Assurance Project Plan Section C3-4? Precision ¿ Verified prior to use by tuning precisely enough to demonstrate compliance with QAOs through viewing an image test pattern, as evidenced by a satisfactory Image Quality Indicator (IQI). ¿ Have discrepancies, if any, between radiography operators been reconciled? Accuracy ¿ Use of a target to tune the image for maximum sharpness as evidenced by a satisfactory IQI and by requiring operators to successfully identify 100% of the required items in a training container during initial and subsequent qualifications. Completeness ¿ An audio/videotape (or equivalent media) of the radiography examination and a validated radiography data form will be obtained for 100% of the retrievably stored waste container in the program for all waste containers subject to radiography. Comparability ¿ Use of standardized radiography procedures and operator qualifications.	Yes	MP-TRUW-8.2, C3-4a	
(10) Do the waste container contents match the WMC, waste stream description and identify the absence of prohibited items?	Yes	MP-TRUW-8.2, C1-3 and B3-11	
(11) If residual liquids exist in the container, is an estimate of quantity given?	Yes	MP-TRUW-8.2, C1-3	
(12) Do the individual container reports contain the (a) IDC, (b) Waste Matrix Code, (c) audio/video recording reference, (d) gross container weight, (e) waste material parameter weights, and (f) signature and date of examination?	Yes	MP-TRUW-8.2, C1-3 and C3-11a	
(13) Have the IDC, WMC, and/or waste stream for all	No	MP-TRUW-8.2, C1-3 and	Containers 10288404, 10289408, 10288396,

Batch Id RTR14-00037 **Open Date** 22-FEB-14 **Close Date** 24-FEB-14

Reviewer REED WALKER **Approval Level** SPM Data Validation

Approval Date 25-MAR-14 **Review Iteration** 1

Question Text	Answer	Requirement	Comment
containers in the batch remained the same as originally assigned by the historical designation? If not, note the container number in the comment field and notify the Acceptable Knowledge Expert (AKE) if NCR does not exist on the WMC and IDC change.		C3-4a	10512142, 10333865, 10512448, 10510769, 10512141, 10512153, 10511993, 10267983 and 10264320 all went to AK for an IDC change; no AKR or NCR is required.
(14) Was a replicate scan performed by an independent operator on at least one container per day or once per testing batch, whichever is less frequent, by a qualified radiography operator that was not involved in the original scan of the waste container?	Yes	MP-TRUW-8.2, B1-3, C3-4a, and C3-10b(1)	
(15) Has an independent observation of one scan (not the replicate) been performed by a qualified operator that was not involved in the original scan of the waste container, at a rate of once per day or once per batch, whichever is less frequent? Record date of observation and any issues or concerns in the comment section.	Yes	MP-TRUW-8.2, C1-3 and C3-4a	Container 10333865 was examined on 24FEB2014 with no issues identified.
(16) Did personnel having current qualifications perform all RTR examinations?	Yes	MP-TRUW-8.1, Appendix F	
(17) Verify the correct procedure and revision number were used for all containers in this batch.	Yes	MP-TRUW-8.2, C3-4a	
(18) Verify the audio and video checks were performed and are satisfactory.	Yes	MP-TRUW-8.2, C3-4a	
(19) Verify that there are 20 or fewer containers in the batch.	Yes	MP-TRUW-8.2, C1-3	
(20) Does the data for all containers within this batch meet the review, validation, and verification requirements? · Are proper units (e.g. Liters or pounds) and significant figure used? · Is the BDR complete (all pages identified in the BDR and numbered accordingly)? - RTR Batch Coversheet - Table of Contents (manual review only) - RTR Analysis reports - Replicate Scan - Replicate Comparison - Independent Observation - Form-1412, ITR checklist - Associated NCRs - Form, 1491, Batch Data Report Supplemental Comment Form, as applicable - Audio/Video Recording References	Yes	MP-TRUW-8.2, C3 10b(2)	
(21) Review all NCR(s) (open and closed). Can the batch be approved?	Yes	MP-TRUW-8.2, C3-13	
(22) Is all data associated with this BDR acceptable for signature release?	No	MP-TRUW-8.2, C3 10b(2)	See batch comments.

Batch Id RTR14-00037 **Open Date** 22-FEB-14 **Close Date** 24-FEB-14

Reviewer REED WALKER **Approval Level** SPM Data Validation
Approval Date 26-MAR-14 **Review Iteration** 2

Question Text	Answer	Requirement	Comment
(1) Has the batch received a Data Generation Level Independent Technical Review?	Yes	MP-TRUW-8.2, C3-10b(1)	
(2) Is the Independent Technical Review checklist complete?	Yes	MP-TRUW-8.2, C3-10b(1)	
(3) When identified, were polychlorinated biphenyls (PCBs), mercury, lead, or other hazardous contaminants consistent with the waste stream acceptable knowledge (AK) Summary Report(s) and/or AK documentation?	Yes	MP-TRUW-8.2, C4-3	
(4) Are any ignitable, corrosive, or reactive wastes identified in this waste?	No	MP-TRUW-8.2, C4-3	
(5) Are the packaging configurations identified on the real-time radiography (RTR) consistent with the waste stream AK Summary Report(s) and/or AK documentation?	Yes	MP-TRUW-8.2, C4-3	
(6) Do the containers in this batch contain typical waste items consistent with waste stream AK Summary Report(s) and/or AK documentation?	Yes	MP-TRUW-8.2, C4-3	
(7) Are the Waste Matrix Codes (WMCs) and physical form descriptions consistent with AK?	Yes	MP-TRUW-8.2, C4-3	
(8) Have all AK discrepancies been resolved and have all AK Resolution checklists been approved? Reference all waste stream AK documentation used in review of this data package.	Yes	MP-TRUW-8.2, C4-3	RPT-TRUW-05, RPT-TRUW-06, RPT-TRUW-12, RPT-TRUW-56
(9) Have all applicable Quality Assurance Objectives (QAOs) been met, including precision, accuracy, completeness, and comparability, by using the appropriate acceptance criteria for each as specified in MP-TRUW-8.2, Quality Assurance Project Plan Section C3-4? Precision ¿ Verified prior to use by tuning precisely enough to demonstrate compliance with QAOs through viewing an image test pattern, as evidenced by a satisfactory Image Quality Indicator (IQI). ¿ Have discrepancies, if any, between radiography operators been reconciled? Accuracy ¿ Use of a target to tune the image for maximum sharpness as evidenced by a satisfactory IQI and by requiring operators to successfully identify 100% of the required items in a training container during initial and subsequent qualifications. Completeness ¿ An audio/videotape (or equivalent media) of the radiography examination and a validated radiography data form will be obtained for 100% of the retrievably stored waste container in the program for all waste containers subject to radiography. Comparability ¿ Use of standardized radiography procedures and operator qualifications.	Yes	MP-TRUW-8.2, C3-4a	
(10) Do the waste container contents match the WMC, waste stream description and identify the absence of prohibited items?	Yes	MP-TRUW-8.2, C1-3 and B3-11	
(11) If residual liquids exist in the container, is an estimate of quantity given?	Yes	MP-TRUW-8.2, C1-3	
(12) Do the individual container reports contain the (a) IDC, (b) Waste Matrix Code, (c) audio/video recording reference, (d) gross container weight, (e) waste material parameter weights, and (f) signature and date of examination?	Yes	MP-TRUW-8.2, C1-3 and C3-11a	
(13) Have the IDC, WMC, and/or waste stream for all	No	MP-TRUW-8.2, C1-3 and	Containers 10288404, 10289408, 10288396,

Batch Id RTR14-00037 **Open Date** 22-FEB-14 **Close Date** 24-FEB-14

Reviewer REED WALKER **Approval Level** SPM Data Validation
Approval Date 26-MAR-14 **Review Iteration** 2

Question Text	Answer	Requirement	Comment
containers in the batch remained the same as originally assigned by the historical designation? If not, note the container number in the comment field and notify the Acceptable Knowledge Expert (AKE) if NCR does not exist on the WMC and IDC change.		C3-4a	10512142, 10333865, 10512448, 10510769, 10512141, 10512153, 10511993, 10267983 and 10264320 all went to AK for an IDC change; no AKR or NCR is required.
(14) Was a replicate scan performed by an independent operator on at least one container per day or once per testing batch, whichever is less frequent, by a qualified radiography operator that was not involved in the original scan of the waste container?	Yes	MP-TRUW-8.2, B1-3, C3-4a, and C3-10b(1)	
(15) Has an independent observation of one scan (not the replicate) been performed by a qualified operator that was not involved in the original scan of the waste container, at a rate of once per day or once per batch, whichever is less frequent? Record date of observation and any issues or concerns in the comment section.	Yes	MP-TRUW-8.2, C1-3 and C3-4a	Container 10333865 was examined on 24FEB2014 with no issues identified.
(16) Did personnel having current qualifications perform all RTR examinations?	Yes	MP-TRUW-8.1, Appendix F	
(17) Verify the correct procedure and revision number were used for all containers in this batch.	Yes	MP-TRUW-8.2, C3-4a	
(18) Verify the audio and video checks were performed and are satisfactory.	Yes	MP-TRUW-8.2, C3-4a	
(19) Verify that there are 20 or fewer containers in the batch.	Yes	MP-TRUW-8.2, C1-3	
(20) Does the data for all containers within this batch meet the review, validation, and verification requirements? · Are proper units (e.g. Liters or pounds) and significant figure used? · Is the BDR complete (all pages identified in the BDR and numbered accordingly)? - RTR Batch Coversheet - Table of Contents (manual review only) - RTR Analysis reports - Replicate Scan - Replicate Comparison - Independent Observation - Form-1412, ITR checklist - Associated NCRs - Form, 1491, Batch Data Report Supplemental Comment Form, as applicable - Audio/Video Recording References	Yes	MP-TRUW-8.2, C3 10b(2)	
(21) Review all NCR(s) (open and closed). Can the batch be approved?	Yes	MP-TRUW-8.2, C3-13	
(22) Is all data associated with this BDR acceptable for signature release?	Yes	MP-TRUW-8.2, C3 10b(2)	

Batch Id RTR14-00037 **Open Date** 22-FEB-14 **Close Date** 24-FEB-14

Esignature History

Esig Approval ID	User ID	Esig Date	Approval Level	Comments
2722845	RWALKER	26-MAR-14	SPM	SPM validation complete. Promote batch.
2722778	DLEE	26-MAR-14	ITR	Rework completed to satisfaction. Promote to SPM.
2722678	DLEE	26-MAR-14	ITR	Demote to Operations for rework.
2722107	RWALKER	25-MAR-14	SPM	Demoted batch back to ITR level for operator rework.
2720057	DLEE	20-MAR-14	ITR	Rework completed to satisfaction. Promote to SPM.
2719890	DLEE	20-MAR-14	ITR	Demote to Operations for rework.

AMWTP
Advanced Mixed Waste Treatment Project

AMWTP
RTR Analysis Report

Date: 11-Sep-2014
Time: 07:57

Batch Id RTR14-00037 **Container Id** 10020294 **Analysis Id** 0000095117

Container Type C drum, 83 Gallon **Analysis Status** Pass

RTR Date 22-FEB-2014 17:31 **Gross Weight** 357.210 **Lbs.** **Net Weight** 198.210 **Lbs**
Equipment Z-213-101 **Waste Matrix Code** S5112 **IDC** RF-480 Non-special Source Metal
Recording Id 1RTR14-00022 **Procedure Id** INST-OI-12 **Revision** 52 **Approval Level** SPM
Is Test Pattern Resolution Ok? Yes **Start Side** A **Replicate** No **OIO** No
Audio Visual Ok? Yes **Operator** SOLDHAM

Result Comment The inner 55 gallon drum contains large pipe flanges.
The inner 55 gallon drum is in good condition.

Package

IDC Correct Yes **Recommended IDC** **Summary Category** S5000
Idc Change Reason
Rigid Liner Present? Yes **LinerType** TYPE 1
Liner Punctured? No **Sharp Objects?** No
Liner Lid Present? Yes **Sharp Objects Are Protected?** Yes
Liner Lid Deformed? No **Layers Of Confinement** 2
Fill Factor 70
Bag Closure Method Twisted and Taped

Liquids

Liquid Present? No **Internal Container with Liquid** No
Internal Container with Liquid 0 pints **LA Candidate** No
Liquid Between Liner & Drum 0 pints **Containerized Liquid**
Total Liquid Amount 0 pints **Containerized Liquid Amt** 0 pints
Other Liquids 0 pints **Comment**
Prohibited Liquids Present No **Comment**

Contents-Drum or Box

	Value	Comment		Value	Comment
Lead?	Yes, Rejected	lead liner	**Mercury Present?**	No	
Wet Cell Batteries?	No		**Explosives?**	No	
Prohibited Compressed Gases?	No		**PCBs Present?**	No	
Aerosol Cans?	No		**PCB Mass (lbs)**	0	
Non-Mixed Hazardous Waste Present?	No		**Sealed Containers Over 4L?**	No	

Non-Radionuclide Pyrophoric Materials Present? No
Waste exhibiting the characteristics of Ignitability, Corrosivity or Reactivity Present? No
Wastes Incompatible with backfill, seal and panel closure materials, container and packaging materials,shipping container or other wastes? No
Impenetrable Dense Objects? No

Waste Material Items

Packaging Materials

Material Item	Quantity	Unit	Unit Wt(lbs)	Item Wt(lbs)
90 mil liner	1.000	EACH	16.000	16.000
Drum plastic bag	1.000	EACH	1.000	1.000
55-GAL DRUM (17c)	1.000	EACH	59.000	59.000

Waste Items byWeight

Material Item	Quantity	Unit	Unit Wt(lbs)	Item Wt(lbs)
Fiber pack	2.000	EACH	6.000	12.000
Plastic bag for waste	4.000	EACH	0.250	1.000
Drum lead-liner (1/16"x28"x72")	1.000	EACH	50.000	50.000

Waste Items by Volume

Material Item	Quantity	Unit	Unit Wt(lbs)	Item Wt(lbs)
Oil-Dri (Inside 55 gal drum)	6.000	PINTS	0.420	2.520

Batch Id RTR14-00037 **Container Id** 10020294 **Analysis Id** 0000095117

Waste Parameters

Waste Parameter	Remaining Weight %	Actual Weight Lbs
Iron-based Metals/Alloys	100.000	132.690
Aluminum-based Metals/Alloys	0.000	0.000
Other metals	0.000	50.000
Other Inorganic Materials	0.000	2.520
Cellulosics	0.000	12.000
Rubber	0.000	0.000
Plastic (Waste Materials)	0.000	1.000
Inorganic matrix	0.000	0.000
Organic matrix	0.000	0.000
Soils/gravel	0.000	0.000
Steel (packaging materials)	0.000	142.000
Plastic (packaging materials)	0.000	17.000
Cellulosics Packaging	0.000	0.000

Analysis Esignature History

Esig Approval Id	User Id	Esignature Date	Comment
2702243	SOLDHAM	22-FEB-2014 17:31	

Batch Id RTR14-00037 **Container Id** 10288404 **Analysis Id** 0000095132

Container Type C drum, 83 Gallon **Analysis Status** Pass

RTR Date 23-FEB-2014 15:26 **Gross Weight** 249.165 **Lbs.** **Net Weight** 107.165 **Lbs.**

Equipment Z-213-101 **Waste Matrix Code** S5490 **IDC** SD-177 Pre-1980 INL-Exhumed SDA Heterogeneous Debris

Recording Id 1RTR14-00022 **Procedure Id** INST-OI-12 **Revision**

Is Test Pattern Resolution Ok? Yes **Start Side** A **Replicate** 52 **Approval Level** SPM

Audio Visual Ok? Yes **Operator** No **OIO** No

SOLDHAM

Result Comment

The inner 55 gallon drum contains plastic sheeting and plastic bottles.
The 55 is in good condition with oil dry between the 55 and 83.
AK does not concur with the recommended IDC UN-00B for container 10288404 because waste is SDA debris. Instead, AK recommends an IDC of SD-177. CHD 2/27/14
Rework: recommended IDC SD-177 per AK. ESO 03/05/14
AK concurs with the recommended IDC, SD-177, for container 10288404. No AKR or NCR is necessary. CHD 03/06/14

Package

IDC Correct Yes **Recommended IDC** SD-177 **Summary Category** S5000

Idc Change Reason Per AK

Rigid Liner Present? No **LinerType** NO LINER

Liner Punctured? N/A **Sharp Objects?** No

Liner Lid Present? No **Sharp Objects Are Protected?** Yes

Liner Lid Deformed? N/A **Layers Of Confinement** 1

Fill Factor 75

Bag Closure Method Twisted and Taped

Liquids

Liquid Present? No **Internal Container with Liquid** No

Internal Container with Liquid 0 pints **LA Candidate** No

Liquid Between Liner & Drum 0 pints **Containerized Liquid**

Total Liquid Amount 0 pints **Containerized Liquid Amt** 0 pints

Other Liquids 0 pints **Comment**

Prohibited Liquids Present No **Comment**

Contents-Drum or Box

	Value	Comment
Lead?	Yes, Acceptable	lead sheeting
Wet Cell Batteries?	No	
Prohibited Compressed Gases?	No	
Aerosol Cans?	No	
Non-Mixed Hazardous Waste Present?	No	

	Value	Comment
Mercury Present?	No	
Explosives?	No	
PCBs Present?	No	
PCB Mass (lbs)	0	
Sealed Containers Over 4L?	No	

Non-Radionuclide Pyrophoric Materials Present? No

Waste exhibiting the characteristics of Ignitability, Corrosivity or Reactivity Present? No

Wastes Incompatible with backfill, seal and panel closure materials, container and packaging materials,shipping container or other wastes? No

Impenetrable Dense Objects? No

Waste Material Items

Packaging Materials

Material Item	Quantity	Unit	Unit Wt(lbs)	Item Wt(lbs)
55-GAL DRUM (17c)	1.000	EACH	59.000	59.000

Waste Items byWeight

Material Item	Quantity	Unit	Unit Wt(lbs)	Item Wt(lbs)
misc. metal	1.000	EACH	8.000	8.000
lead sheeting	1.000	EACH	8.000	8.000
Plastic bag for waste	2.000	EACH	0.250	0.500

Batch Id RTR14-00037 **Container Id** 10288404 **Analysis Id** 0000095132

Waste Items by Volume

Material Item	Quantity	Unit	Unit Wt(lbs)	Item Wt(lbs)
Oil-Dri (Inside 55 gal drum)	100.000	PINTS	0.420	42.000

Waste Parameters

Waste Parameter	Remaining Weight %	Actual Weight Lbs
Iron-based Metals/Alloys	0.000	8.000
Aluminum-based Metals/Alloys	0.000	0.000
Other metals	0.000	8.000
Other Inorganic Materials	0.000	42.000
Cellulosics	0.000	0.000
Rubber	0.000	0.000
Plastic (Waste Materials)	100.000	49.165
Inorganic matrix	0.000	0.000
Organic matrix	0.000	0.000
Soils/gravel	0.000	0.000
Steel (packaging materials)	0.000	142.000
Plastic (packaging materials)	0.000	0.000
Cellulosics Packaging	0.000	0.000

Analysis Esignature History

Esig Approval Id	User Id	Esignature Date	Comment
2711353	CHINKLE	06-MAR-2014 07:44	Batch is promoted. chd 3/6/14
2711035	SOLDHAM	05-MAR-2014 15:05	Rework per AK
2705839	CHINKLE	27-FEB-2014 13:49	This batch is returned for rework. AK does not concur with the recommended IDC change for containers 10512448, 10512153, 10512142, 10512141, 10511993, 10333865, 10289408, 10288404. CHD 2/27/14
2702649	SOLDHAM	23-FEB-2014 15:26	

Batch Id RTR14-00037 **Container Id** 10289408 **Analysis Id** 0000095133

Container Type C drum, 83 Gallon **Analysis Status** Pass

RTR Date 23-FEB-2014 15:55 **Gross Weight** 515.970 **Lbs.** **Net Weight** 372.970 **Lbs.**

Equipment Z-213-101 **Waste Matrix Code** S3900 **IDC** RF-747 RFP Miscellaneous Sludge

Recording Id 1RTR14-00022 **Procedure Id** INST-OI-12 **Revision** 52 **Approval Level** SPM

Is Test Pattern Resolution Ok? Yes **Start Side** A **Replicate** No **OIO** No

Audio Visual Ok? Yes **Operator** SOLDHAM

Result Comment The inner 55 gallon drum contains sludge.
The 55 is in good condition with oil dry between the 55 and 83.
AK does not concur with the recommended IDC UN-00A for container 10289408 because inspection identifies RF. Instead, AK recommends an IDC of RF-747. CHD 2/27/14
Rework: recommended IDC RF-747 per AK. ESO 03/05/14
AK concurs with the recommended IDC, RF-747, for container 10289408. No AKR or NCR is necessary. CHD 03/06/14
Rework: Corrected remaining waste weight in waste parameters, corrected PCB question. cjs 03/20/14

Package

IDC Correct Yes **Recommended IDC** RF-747 **Summary Category** S3000

Idc Change Reason Per AK

Rigid Liner Present? No **LinerType** NO LINER

Liner Punctured? N/A **Sharp Objects?** No

Liner Lid Present? No **Sharp Objects Are Protected?** Yes

Liner Lid Deformed? N/A **Layers Of Confinement** 1

Fill Factor 80

Bag Closure Method Twisted and Taped

Liquids

Liquid Present? No **Internal Container with Liquid** No

Internal Container with Liquid 0 pints **LA Candidate** No

Liquid Between Liner & Drum 0 pints **Containerized Liquid**

Containerized Liquid Amt 0 pints

Total Liquid Amount 0 pints

Other Liquids 0 pints **Comment**

Prohibited Liquids Present No **Comment**

Contents-Drum or Box

	Value	Comment		Value	Comment
Lead?	No		Mercury Present?	No	
Wet Cell Batteries?	No		Explosives?	No	
Prohibited Compressed Gases?	No		PCBs Present?	No	
Aerosol Cans?	No		PCB Mass (lbs)	0	
Non-Mixed Hazardous Waste Present?	No		Sealed Containers Over 4L?	No	

Non-Radionuclide Pyrophoric Materials Present? No

Waste exhibiting the characteristics of Ignitability, Corrosivity or Reactivity Present? No

Wastes Incompatible with backfill, seal and panel closure materials, container and packaging materials,shipping container or other wastes? No

Impenetrable Dense Objects? Yes - Unacceptable The waste is impenetrable.

Waste Material Items

Packaging Materials

Material Item	Quantity	Unit	Unit Wt(lbs)	Item Wt(lbs)
Drum plastic bag	1.000	EACH	1.000	1.000
55-GAL DRUM (17c)	1.000	EACH	59.000	59.000

Waste Items byWeight

Material Item	Quantity	Unit	Unit Wt(lbs)	Item Wt(lbs)
plastic sheeting	1.000	EACH	5.000	5.000
misc. metal	1.000	EACH	15.000	15.000
D-cell Battery	6.000	EACH	0.250	1.500

Batch Id RTR14-00037 **Container Id** 10289408 **Analysis Id** 0000095133

Waste Items by Volume

Material Item	Quantity	Unit	Unit Wt(lbs)	Item Wt(lbs)
Oil-Dri (Inside 55 gal drum)	90.000	PINTS	0.420	37.800

Waste Parameters

Waste Parameter	Remaining Weight %	Actual Weight Lbs
Iron-based Metals/Alloys	0.000	15.000
Aluminum-based Metals/Alloys	0.000	0.000
Other metals	0.000	1.500
Other Inorganic Materials	0.000	37.800
Cellulosics	0.000	0.000
Rubber	0.000	0.000
Plastic (Waste Materials)	0.000	5.000
Inorganic matrix	100.000	313.670
Organic matrix	0.000	0.000
Soils/gravel	0.000	0.000
Steel (packaging materials)	0.000	142.000
Plastic (packaging materials)	0.000	1.000
Cellulosics Packaging	0.000	0.000

Analysis Esignature History

Esig Approval Id	User Id	Esignature Date	Comment
2719925	CSIMMONS	20-MAR-2014 15:44	Rework
2711352	CHINKLE	06-MAR-2014 07:44	Batch is promoted. chd 3/6/14
2711101	SOLDHAM	05-MAR-2014 15:15	Rework per AK
2705838	CHINKLE	27-FEB-2014 13:49	This batch is returned for rework. AK does not concur with the recommended IDC change for containers 10512448, 10512153, 10512142, 10512141, 10511993, 10333865, 10289408, 10288404. CHD 2/27/14
2702658	SOLDHAM	23-FEB-2014 15:55	

Batch Id RTR14-00037 **Container Id** 10288396 **Analysis Id** 0000095135

Container Type C drum, 83 Gallon **Analysis Status** Pass

RTR Date 23-FEB-2014 16:14 **Gross Weight** 233.730 **Lbs.** **Net Weight** 89.730 **Lbs**

Equipment Z-213-101 **Waste Matrix Code** S5490 **IDC** RF-750 Pits 11 & 12 Debris

Recording Id 1RTR14-00022 **Procedure Id** INST-OI-12 **Revision** 52 **Approval Level** SPM

Is Test Pattern Resolution Ok? Yes **Start Side** A **Replicate** No **OIO** No

Audio Visual Ok? Yes **Operator** SOLDHAM

Result Comment The inner 55 gallon drum contains paper and rags.
The 55 is in good condition with oil dry between the 55 and 83.
AK concurs with the recommended IDC, RF-750, for container 10288396. No AKR or NCR is necessary. CHD 2/27/14

Package

IDC Correct Yes **Recommended IDC** **Summary Category** S5000

Idc Change Reason

Rigid Liner Present? No **LinerType** NO LINER

Liner Punctured? N/A **Sharp Objects?** No

Liner Lid Present? No **Sharp Objects Are Protected?** Yes

Liner Lid Deformed? N/A **Layers Of Confinement** 3

Fill Factor 90

Bag Closure Method Twisted and Taped

Liquids

Liquid Present? No **Internal Container with Liquid** No

Internal Container with Liquid 0 pints **LA Candidate** No

Liquid Between Liner & Drum 0 pints **Containerized Liquid**

Total Liquid Amount 0 pints **Containerized Liquid Amt** 0 pints

Other Liquids 0 pints **Comment**

Prohibited Liquids Present No **Comment**

Contents-Drum or Box

	Value	Comment		Value	Comment
Lead?	Yes, Acceptable	lead tape	**Mercury Present?**	No	
Wet Cell Batteries?	No		**Explosives?**	No	
Prohibited Compressed Gases?	No		**PCBs Present?**	No	
Aerosol Cans?	No		**PCB Mass (lbs)**	0	
Non-Mixed Hazardous Waste Present?	No		**Sealed Containers Over 4L?**	No	

Non-Radionuclide Pyrophoric Materials Present? No

Waste exhibiting the characteristics of Ignitability, Corrosivity or Reactivity Present? No

Wastes Incompatible with backfill, seal and panel closure materials, container and packaging materials,shipping container or other wastes? No

Impenetrable Dense Objects? No

Waste Material Items

Packaging Materials

Material Item	Quantity	Unit	Unit Wt(lbs)	Item Wt(lbs)
Drum plastic bag	2.000	EACH	1.000	2.000
55-GAL DRUM (17c)	1.000	EACH	59.000	59.000

Waste Items byWeight

Material Item	Quantity	Unit	Unit Wt(lbs)	Item Wt(lbs)
lead tape	1.000	EACH	0.500	0.500
misc. metal	1.000	EACH	4.000	4.000
Plastic bag for waste	4.000	EACH	0.250	1.000
D-cell Battery	6.000	EACH	0.250	1.500
Respirator Cartridges	2.000	EACH	0.250	0.500

Batch Id RTR14-00037 **Container Id** 10288396 **Analysis Id** 0000095135

Waste Items by Volume

Material Item	Quantity	Unit	Unit Wt(lbs)	Item Wt(lbs)
Oil-Dri (Inside 55 gal drum)	100.000	PINTS	0.420	42.000

Waste Parameters

Waste Parameter	Remaining Weight %	Actual Weight Lbs
Iron-based Metals/Alloys	0.000	4.000
Aluminum-based Metals/Alloys	0.000	0.350
Other metals	0.000	2.000
Other Inorganic Materials	0.000	42.000
Cellulosics	100.000	40.380
Rubber	0.000	0.000
Plastic (Waste Materials)	0.000	1.000
Inorganic matrix	0.000	0.000
Organic matrix	0.000	0.000
Soils/gravel	0.000	0.000
Steel (packaging materials)	0.000	142.000
Plastic (packaging materials)	0.000	2.000
Cellulosics Packaging	0.000	0.000
MLLW Waste	0.000	0.000

Analysis Esignature History

Esig Approval Id	User Id	Esignature Date	Comment
2705840	CHINKLE	27-FEB-2014 13:49	This batch is returned for rework. AK does not concur with the recommended IDC change for containers 10512448, 10512153, 10512142, 10512141, 10511993, 10333865, 10289408, 10288404. CHD 2/27/14
2702662	SOLDHAM	23-FEB-2014 16:14	

Batch Id RTR14-00037 **Container Id** 10174681 **Analysis Id** 0000095137

Container Type C drum, 83 Gallon **Analysis Status** Pass

RTR Date 23-FEB-2014 17:05 **Gross Weight** 414.540 **Lbs.** **Net Weight** 271.540 **Lbs.**

Equipment Z-213-101 **Waste Matrix Code** S5311 **IDC** RF-463 Leaded Rubber Gloves and Aprons

Recording Id 1RTR14-00022 **Procedure Id** INST-OI-12 **Revision** 52 **Approval Level** SPM

Is Test Pattern Resolution Ok? Yes **Start Side** A **Replicate** No **OIO** No

Audio Visual Ok? Yes **Operator** SOLDHAM

Result Comment The inner 55 gallond drum contains leaded rubber gloves.

Package

IDC Correct Yes **Recommended IDC** **Summary Category** S5000

Idc Change Reason

Rigid Liner Present? No **LinerType** NO LINER

Liner Punctured? N/A **Sharp Objects?** No

Liner Lid Present? No **Sharp Objects Are Protected?** Yes

Liner Lid Deformed? N/A **Layers Of Confinement** 2

Fill Factor 85

Bag Closure Method Twisted and Taped

Liquids

Liquid Present? No **Internal Container with Liquid** No

Internal Container with Liquid 0 pints **LA Candidate** No

Liquid Between Liner & Drum 0 pints **Containerized Liquid**

Total Liquid Amount 0 pints **Containerized Liquid Amt** 0 pints

Other Liquids 0 pints **Comment**

Prohibited Liquids Present No **Comment**

Contents-Drum or Box

	Value	Comment		Value	Comment
Lead?	Yes, Acceptable	leaded gloves	**Mercury Present?**	No	
Wet Cell Batteries?	No		**Explosives?**	No	
Prohibited Compressed Gases?	No		**PCBs Present?**	No	
Aerosol Cans?	No		**PCB Mass (lbs)**	0	
Non-Mixed Hazardous Waste Present?	No		**Sealed Containers Over 4L?**	No	

Non-Radionuclide Pyrophoric Materials Present? No

Waste exhibiting the characteristics of Ignitability, Corrosivity or Reactivity Present? No

Wastes Incompatible with backfill, seal and panel closure materials, container and packaging materials,shipping container or other wastes? No

Impenetrable Dense Objects? Yes - Unacceptable impeneteable waste.

Waste Material Items

Packaging Materials

Material Item	Quantity	Unit	Unit Wt(lbs)	Item Wt(lbs)
Drum plastic bag	1.000	EACH	1.000	1.000
55-GAL DRUM (17c)	1.000	EACH	59.000	59.000

Waste Items byWeight

Material Item	Quantity	Unit	Unit Wt(lbs)	Item Wt(lbs)
plastic sheeting	1.000	EACH	10.000	10.000
Plastic bag for waste	4.000	EACH	0.250	1.000

Waste Items by Volume

Material Item	Quantity	Unit	Unit Wt(lbs)	Item Wt(lbs)
Oil-Dri (Inside 55 gal drum)	110.000	PINTS	0.420	46.200

Batch Id RTR14-00037 **Container Id** 10174681 **Analysis Id** 0000095137

Waste Parameters

Waste Parameter	Remaining Weight %	Actual Weight Lbs
Iron-based Metals/Alloys	0.000	0.000
Aluminum-based Metals/Alloys	0.000	0.000
Other metals	0.000	0.000
Other Inorganic Materials	0.000	46.200
Cellulosics	0.000	0.000
Rubber	100.000	214.340
Plastic (Waste Materials)	0.000	11.000
Inorganic matrix	0.000	0.000
Organic matrix	0.000	0.000
Soils/gravel	0.000	0.000
Steel (packaging materials)	0.000	142.000
Plastic (packaging materials)	0.000	1.000
Cellulosics Packaging	0.000	0.000

Analysis Esignature History

Esig Approval Id	User Id	Esignature Date	Comment
2702674	SOLDHAM	23-FEB-2014 17:05	

Batch Id RTR14-00037 **Container Id** 10512134 **Analysis Id** 0000095140

Container Type 7A85 85 Gallon Open Head drum, DOT 7A **Analysis Status** Pass

RTR Date 23-FEB-2014 17:46 **Gross Weight** 463.050 **Lbs.** **Net Weight** 322.050 **Lbs**

Equipment Z-213-101 **Waste Matrix Code** S3114 **IDC** RF-003 Organic Setups, Oil Solids

Recording Id 1RTR14-00022 **Procedure Id** INST-OI-12 **Revision** 52 **Approval Level** SPM

Is Test Pattern Resolution Ok? Yes **Start Side** A **Replicate** No **OIO** No

Audio Visual Ok? Yes **Operator** SOLDHAM

Result Comment The inner 55 gallon drum contains sludge. The 55 is in fair condition with lots of rust.

Package

IDC Correct Yes **Recommended IDC** **Summary Category** S3000

Idc Change Reason

Rigid Liner Present? No **LinerType** NO LINER

Liner Punctured? N/A **Sharp Objects?** No

Liner Lid Present? No **Sharp Objects Are Protected?** Yes

Liner Lid Deformed? N/A **Layers Of Confinement** 2

Fill Factor 95

Bag Closure Method Twisted and Taped

Liquids

Liquid Present? Yes **Internal Container with Liquid** Yes

Internal Container with Liquid .2 pints **LA Candidate** No

Liquid Between Liner & Drum 0 pints **Containerized Liquid**

Total Liquid Amount .2 pints **Containerized Liquid Amt** 0 pints

Other Liquids 0 pints **Comment** 0.2 pint of liquid in a one gallon poly bottle at the bottom of the waste.

Prohibited Liquids Present Yes **Comment** PCB with liquid

Contents-Drum or Box

	Value	Comment		Value	Comment
Lead?	No		**Mercury Present?**	No	
Wet Cell Batteries?	No		**Explosives?**	No	
Prohibited Compressed Gases?	No		**PCBs Present?**	Yes - Prohibited	PCB with liquid
Aerosol Cans?	No		**PCB Mass (lbs)**	322.05	
Non-Mixed Hazardous Waste Present?	No		**Sealed Containers Over 4L?**	No	

Non-Radionuclide Pyrophoric Materials Present? No

Waste exhibiting the characteristics of Ignitability, Corrosivity or Reactivity Present? No

Wastes Incompatible with backfill, seal and panel closure materials, container and packaging materials,shipping container or other wastes? No

Impenetrable Dense Objects? No

Waste Material Items

Packaging Materials

Material Item	Quantity	Unit	Unit Wt(lbs)	Item Wt(lbs)
Drum plastic bag	2.000	EACH	1.000	2.000
55-GAL DRUM (17c)	1.000	EACH	59.000	59.000

Waste Items byWeight

Material Item	Quantity	Unit	Unit Wt(lbs)	Item Wt(lbs)
misc. metal	1.000	EACH	2.000	2.000
Poly bottles (1 gal)	3.000	EACH	1.000	3.000

Waste Items by Volume

Material Item	Quantity	Unit	Unit Wt(lbs)	Item Wt(lbs)
Liquids for Organic Matrix	0.200	PINTS	1.000	0.200

Batch Id RTR14-00037 **Container Id** 10512134 **Analysis Id** 0000095140

Waste Parameters

Waste Parameter	Remaining Weight %	Actual Weight Lbs
Iron-based Metals/Alloys	0.000	2.000
Aluminum-based Metals/Alloys	0.000	0.000
Other metals	0.000	0.000
Other Inorganic Materials	0.000	0.000
Cellulosics	0.000	0.000
Rubber	0.000	0.000
Plastic (Waste Materials)	0.000	3.000
Inorganic matrix	0.000	0.000
Organic matrix	100.000	317.050
Soils/gravel	0.000	0.000
Steel (packaging materials)	0.000	139.000
Plastic (packaging materials)	0.000	2.000
Cellulosics Packaging	0.000	0.000

Analysis Esignature History

Esig Approval Id	User Id	Esignature Date	Comment
2702688	SOLDHAM	23-FEB-2014 17:46	

Batch Id RTR14-00037 **Container Id** 10512142 **Analysis Id** 0000095141

Container Type 7A85 85 Gallon Open Head drum, DOT 7A **Analysis Status** Pass

RTR Date 24-FEB-2014 08:23 **Gross Weight** 178.605 **Lbs.** **Net Weight** 38.605 **Lbs**

Equipment Z-213-101 **Waste Matrix Code** S5490 **IDC** RF-760 RFP Debris

Recording Id 1RTR14-00022 **Procedure Id** INST-OI-12 **Revision** 52 **Approval Level** SPM

Is Test Pattern Resolution Ok? Yes **Start Side** A **Replicate** No **OIO** No

Audio Visual Ok? Yes **Operator** SOLDHAM

Result Comment The inner 55 gallon drum contains plastic sheeting and clean-up debris.
The 55 is in good condition.
AK does not concur with the recommended IDC change from BN-180 to BN-524 for container 10512142 because waste is RF debris retrieved from Pad 1, cells 1 and 2. Instead, AK recommends an IDC of RF-760. CHD 2/27/14
Rework: recommended IDC RF-760 per AK. ESO 03/05/14
AK concurs with the recommended IDC, RF-760, for container 10512142. No AKR or NCR is necessary. CHD 03/06/14

Package

IDC Correct Yes **Recommended IDC** RF-760 **Summary Category** S5000

Idc Change Reason Per AK

Rigid Liner Present? No **LinerType** NO LINER

Liner Punctured? N/A **Sharp Objects?** No

Liner Lid Present? No **Sharp Objects Are Protected?** Yes

Liner Lid Deformed? N/A **Layers Of Confinement** 2

Fill Factor 99

Bag Closure Method Twisted and Taped

Liquids

Liquid Present? No **Internal Container with Liquid** No

Internal Container with Liquid 0 pints **LA Candidate** No

Liquid Between Liner & Drum 0 pints **Containerized Liquid**

Total Liquid Amount 0 pints **Containerized Liquid Amt** 0 pints

Other Liquids 0 pints **Comment**

Prohibited Liquids Present No **Comment**

Contents-Drum or Box

	Value	Comment		Value	Comment
Lead?	No		Mercury Present?	No	
Wet Cell Batteries?	No		Explosives?	No	
Prohibited Compressed Gases?	No		PCBs Present?	No	
Aerosol Cans?	No		PCB Mass (lbs)	0	
Non-Mixed Hazardous Waste Present?	No		Sealed Containers Over 4L?	No	

Non-Radionuclide Pyrophoric Materials Present? No

Waste exhibiting the characteristics of Ignitability, Corrosivity or Reactivity Present? No

Wastes Incompatible with backfill, seal and panel closure materials, container and packaging materials,shipping container or other wastes? No

Impenetrable Dense Objects? No

Waste Material Items

Packaging Materials

Material Item	Quantity	Unit	Unit Wt(lbs)	Item Wt(lbs)
Drum plastic bag	1.000	EACH	1.000	1.000
55-GAL DRUM (17c)	1.000	EACH	59.000	59.000

Waste Items byWeight

Material Item	Quantity	Unit	Unit Wt(lbs)	Item Wt(lbs)
Cardboard liner	1.000	EACH	4.000	4.000
Plastic bag for waste	1.000	EACH	0.250	0.250

Batch Id RTR14-00037 **Container Id** 10512142 **Analysis Id** 0000095141

Waste Items by Volume

Material Item	Quantity	Unit	Unit Wt(lbs)	Item Wt(lbs)
Dirt	10.000	PINTS	1.303	13.030

Waste Parameters

Waste Parameter	Remaining Weight %	Actual Weight Lbs
Iron-based Metals/Alloys	0.000	0.000
Aluminum-based Metals/Alloys	0.000	0.000
Other metals	0.000	0.000
Other Inorganic Materials	0.000	0.000
Cellulosics	0.000	4.000
Rubber	0.000	0.000
Plastic (Waste Materials)	100.000	21.575
Inorganic matrix	0.000	0.000
Organic matrix	0.000	0.000
Soils/gravel	0.000	13.030
Steel (packaging materials)	0.000	139.000
Plastic (packaging materials)	0.000	1.000
Cellulosics Packaging	0.000	0.000
MLLW Waste	0.000	0.000

Analysis Esignature History

Esig Approval Id	User Id	Esignature Date	Comment
2711348	CHINKLE	06-MAR-2014 07:44	Batch is promoted. chd 3/6/14
2711109	SOLDHAM	05-MAR-2014 15:25	Rework per AK
2705833	CHINKLE	27-FEB-2014 13:49	This batch is returned for rework. AK does not concur with the recommended IDC change for containers 10512448, 10512153, 10512142, 10512141, 10511993, 10333865, 10289408, 10288404. CHD 2/27/14
2702919	SOLDHAM	24-FEB-2014 08:23	

Batch Id RTR14-00037 **Container Id** 10187513 **Analysis Id** 0000095142

Container Type C drum, 83 Gallon **Analysis Status** Pass

RTR Date 24-FEB-2014 08:41 **Gross Weight** 628.425 **Lbs.** **Net Weight** 484.425 **Lbs.**

Equipment Z-213-101 **Waste Matrix Code** S5490 **IDC** RF-960 Concrete, Asphalt, etc.

Recording Id 1RTR14-00022 **Procedure Id** INST-OI-12 **Revision** 52 **Approval Level** SPM

Is Test Pattern Resolution Ok? Yes **Start Side** A **Replicate** No **OIO** No

Audio Visual Ok? Yes **Operator** SOLDHAM

Result Comment The inner 55 gallon drum contains concrete rubble. The 55 is in good condition.

Package

IDC Correct Yes **Recommended IDC** **Summary Category** S5000

Idc Change Reason

Rigid Liner Present? No **LinerType** NO LINER

Liner Punctured? N/A **Sharp Objects?** No

Liner Lid Present? No **Sharp Objects Are Protected?** Yes

Liner Lid Deformed? N/A **Layers Of Confinement** 2

Fill Factor 90

Bag Closure Method Twisted and Taped

Liquids

Liquid Present? No **Internal Container with Liquid** No

Internal Container with Liquid 0 pints **LA Candidate** No

Liquid Between Liner & Drum 0 pints **Containerized Liquid**

Total Liquid Amount 0 pints **Containerized Liquid Amt** 0 pints

Other Liquids 0 pints **Comment**

Prohibited Liquids Present No **Comment**

Contents-Drum or Box

	Value	Comment		Value	Comment
Lead?	No		**Mercury Present?**	No	
Wet Cell Batteries?	No		**Explosives?**	No	
Prohibited Compressed Gases?	No		**PCBs Present?**	No	
Aerosol Cans?	No		**PCB Mass (lbs)**	0	
Non-Mixed Hazardous Waste Present?	No		**Sealed Containers Over 4L?**	No	

Non-Radionuclide Pyrophoric Materials Present? No

Waste exhibiting the characteristics of Ignitability, Corrosivity or Reactivity Present? No

Wastes Incompatible with backfill, seal and panel closure materials, container and packaging materials,shipping container or other wastes? No

Impenetrable Dense Objects? Yes - Unacceptable The waste is impenetrable

Waste Material Items

Packaging Materials

Material Item	Quantity	Unit	Unit Wt(lbs)	Item Wt(lbs)
Drum plastic bag	2.000	EACH	1.000	2.000
55-GAL DRUM (17c)	1.000	EACH	59.000	59.000

Waste Items byWeight

Material Item	Quantity	Unit	Unit Wt(lbs)	Item Wt(lbs)
Re-bar	1.000	EACH	4.000	4.000
Cardboard liner	1.000	EACH	4.000	4.000

Waste Items by Volume

Material Item	Quantity	Unit	Unit Wt(lbs)	Item Wt(lbs)
Oil-Dri (Inside 55 gal drum)	8.000	PINTS	0.420	3.360

Batch Id RTR14-00037 **Container Id** 10187513 **Analysis Id** 0000095142

Waste Parameters

Waste Parameter	Remaining Weight %	Actual Weight Lbs
Iron-based Metals/Alloys	0.000	4.000
Aluminum-based Metals/Alloys	0.000	0.000
Other metals	0.000	0.000
Other Inorganic Materials	100.000	476.425
Cellulosics	0.000	4.000
Rubber	0.000	0.000
Plastic (Waste Materials)	0.000	0.000
Inorganic matrix	0.000	0.000
Organic matrix	0.000	0.000
Soils/gravel	0.000	0.000
Steel (packaging materials)	0.000	142.000
Plastic (packaging materials)	0.000	2.000
Cellulosics Packaging	0.000	0.000
MLLW Waste	0.000	0.000

Analysis Esignature History

Esig Approval Id	User Id	Esignature Date	Comment
2702930	SOLDHAM	24-FEB-2014 08:41	

Batch Id RTR14-00037 **Container Id** 10416210 **Analysis Id** 0000095145

Container Type 7A85 85 Gallon Open Head drum, DOT 7A **Analysis Status** Pass

RTR Date 24-FEB-2014 09:09 **Gross Weight** 579.915 **Lbs.** **Net Weight** 424.915 **Lbs**

Equipment Z-213-101 **Waste Matrix Code** S3114 **IDC** RF-003 Organic Setups, Oil Solids

Recording Id 1RTR14-00022 **Procedure Id** INST-OI-12 **Revision** 52 **Approval Level** SPM

Is Test Pattern Resolution Ok? Yes **Start Side** A **Replicate** No **OIO** No

Audio Visual Ok? Yes **Operator** SOLDHAM

Result Comment The inner 55 gallon drum contains sludge.
The 55 is in good condition.

Package

IDC Correct Yes **Recommended IDC** **Summary Category** S3000

Idc Change Reason

Rigid Liner Present? Yes **LinerType** TYPE 1

Liner Punctured? Yes **Sharp Objects?** No

Liner Lid Present? No **Sharp Objects Are Protected?** Yes

Liner Lid Deformed? N/A **Layers Of Confinement** 0

Fill Factor 95

Bag Closure Method No Bags

Liquids

Liquid Present? No **Internal Container with Liquid** No

Internal Container with Liquid 0 pints **LA Candidate** No

Liquid Between Liner & Drum 0 pints **Containerized Liquid**

Total Liquid Amount 0 pints **Containerized Liquid Amt** 0 pints

Other Liquids 0 pints **Comment**

Prohibited Liquids Present No **Comment**

Contents-Drum or Box

	Value	Comment		Value	Comment
Lead?	No		**Mercury Present?**	No	
Wet Cell Batteries?	No		**Explosives?**	No	
Prohibited Compressed Gases?	No		**PCBs Present?**	Yes - Acceptable	PCB waste
Aerosol Cans?	No		**PCB Mass (lbs)**	424.92	
Non-Mixed Hazardous Waste Present?	No		**Sealed Containers Over 4L?**	No	

Non-Radionuclide Pyrophoric Materials Present? No

Waste exhibiting the characteristics of Ignitability, Corrosivity or Reactivity Present? No

Wastes Incompatible with backfill, seal and panel closure materials, container and packaging materials,shipping container or other wastes? No

Impenetrable Dense Objects? No

Waste Material Items

Packaging Materials

Material Item	Quantity	Unit	Unit Wt(lbs)	Item Wt(lbs)
90 mil liner	1.000	EACH	16.000	16.000
55-GAL DRUM (17c)	1.000	EACH	59.000	59.000

Waste Items byWeight

Material Item	Quantity	Unit	Unit Wt(lbs)	Item Wt(lbs)
plastic sheeting	1.000	EACH	2.000	2.000
NF7DS Filter	1.000	EACH	0.240	0.240
Box Knife	1.000	EACH	0.250	0.250

Waste Items by Volume

Material Item	Quantity	Unit	Unit Wt(lbs)	Item Wt(lbs)

Batch Id RTR14-00037 **Container Id** 10416210 **Analysis Id** 0000095145

Waste Parameters

Waste Parameter	Remaining Weight %	Actual Weight Lbs
Iron-based Metals/Alloys	0.000	0.365
Aluminum-based Metals/Alloys	0.000	0.000
Other metals	0.000	0.000
Other Inorganic Materials	0.000	0.000
Cellulosics	0.000	0.000
Rubber	0.000	0.000
Plastic (Waste Materials)	0.000	2.125
Inorganic matrix	0.000	0.000
Organic matrix	100.000	422.425
Soils/gravel	0.000	0.000
Steel (packaging materials)	0.000	139.000
Plastic (packaging materials)	0.000	16.000
Cellulosics Packaging	0.000	0.000

Analysis Esignature History

Esig Approval Id	User Id	Esignature Date	Comment
2702955	SOLDHAM	24-FEB-2014 09:09	

Batch Id RTR14-00037 **Container Id** 10350105 **Analysis Id** 0000095146

Container Type C drum, 83 Gallon **Analysis Status** Pass

RTR Date 24-FEB-2014 10:36 **Gross Weight** 280.035 **Lbs.** **Net Weight** 136.035 **Lbs.**

Equipment Z-213-101 **Waste Matrix Code** S5300 **IDC** RF-330 Paper and Rags-Dry

Recording Id 1RTR14-00022 **Procedure Id** INST-OI-12 **Revision** 52 **Approval Level** SPM

Is Test Pattern Resolution Ok? Yes **Start Side** A **Replicate** No **OIO** No

Audio Visual Ok? Yes **Operator** SOLDHAM

Result Comment The inner 55 gallon drum contains paper and rags. The 55 is in fair condition.

Package

IDC Correct Yes **Recommended IDC** **Summary Category** S5000

Idc Change Reason

Rigid Liner Present? No **LinerType** NO LINER

Liner Punctured? N/A **Sharp Objects?** No

Liner Lid Present? No **Sharp Objects Are Protected?** Yes

Liner Lid Deformed? N/A **Layers Of Confinement** 3

Fill Factor 97

Bag Closure Method Twisted and Taped

Liquids

Liquid Present? No **Internal Container with Liquid** No

Internal Container with Liquid 0 pints **LA Candidate** No

Liquid Between Liner & Drum 0 pints **Containerized Liquid**

Total Liquid Amount 0 pints **Containerized Liquid Amt** 0 pints

Other Liquids 0 pints **Comment**

Prohibited Liquids Present No **Comment**

Contents-Drum or Box

	Value	Comment		Value	Comment
Lead?	No		**Mercury Present?**	No	
Wet Cell Batteries?	No		**Explosives?**	No	
Prohibited Compressed Gases?	No		**PCBs Present?**	No	
Aerosol Cans?	No		**PCB Mass (lbs)**	0	
Non-Mixed Hazardous Waste Present?	No		**Sealed Containers Over 4L?**	No	

Non-Radionuclide Pyrophoric Materials Present? No

Waste exhibiting the characteristics of Ignitability, Corrosivity or Reactivity Present? No

Wastes Incompatible with backfill, seal and panel closure materials, container and packaging materials,shipping container or other wastes? No

Impenetrable Dense Objects? No

Waste Material Items

Packaging Materials

Material Item	Quantity	Unit	Unit Wt(lbs)	Item Wt(lbs)
Drum plastic bag	2.000	EACH	1.000	2.000
55-GAL DRUM (17c)	1.000	EACH	59.000	59.000

Waste Items byWeight

Material Item	Quantity	Unit	Unit Wt(lbs)	Item Wt(lbs)
plastic sheeting	1.000	EACH	10.000	10.000
motor & misc. metal	1.000	EACH	20.000	20.000
Plastic bag for waste	1.000	EACH	0.250	0.250
D-cell Battery	7.000	EACH	0.250	1.750
Respirator Cartridges	18.000	EACH	0.250	4.500

Batch Id RTR14-00037 **Container Id** 10350105 **Analysis Id** 0000095146

Waste Items by Volume

Material Item	Quantity	Unit	Unit Wt(lbs)	Item Wt(lbs)
Oil-Dri (Inside 55 gal drum)	10.000	PINTS	0.420	4.200

Waste Parameters

Waste Parameter	Remaining Weight %	Actual Weight Lbs
Iron-based Metals/Alloys	0.000	20.000
Aluminum-based Metals/Alloys	0.000	3.150
Other metals	0.000	1.750
Other Inorganic Materials	0.000	4.200
Cellulosics	100.000	96.685
Rubber	0.000	0.000
Plastic (Waste Materials)	0.000	10.250
Inorganic matrix	0.000	0.000
Organic matrix	0.000	0.000
Soils/gravel	0.000	0.000
Steel (packaging materials)	0.000	142.000
Plastic (packaging materials)	0.000	2.000
Cellulosics Packaging	0.000	0.000
MLLW Waste	0.000	0.000

Analysis Esignature History

Esig Approval Id	User Id	Esignature Date	Comment
2703010	SOLDHAM	24-FEB-2014 10:36	

Batch Id RTR14-00037 **Container Id** 10510756 **Analysis Id** 0000095149

Container Type 7A85 85 Gallon Open Head drum, DOT 7A **Analysis Status** Pass

RTR Date 24-FEB-2014 11:29 **Gross Weight** 443.205 **Lbs.** **Net Weight** 303.205 **Lbs.**

Equipment Z-213-101 **Waste Matrix Code** S3114 **IDC** RF-003 Organic Setups, Oil Solids

Recording Id 1RTR14-00022 **Procedure Id** INST-OI-12 **Revision** 52 **Approval Level** SPM

Is Test Pattern Resolution Ok? Yes **Start Side** A **Replicate** No **OIO** No

Audio Visual Ok? Yes **Operator** SOLDHAM

Result Comment The inner 55 gallon drum contains sludge.
The 55 is in good condition.
Rework: Corrected drum bag in packaging and layers of confinement. cj 03/20/14
Rework: Corrected PCB Mass lbs cjs 03/26/14

Package

IDC Correct Yes **Recommended IDC** **Summary Category** S3000

Idc Change Reason

Rigid Liner Present? No **LinerType** NO LINER

Liner Punctured? N/A **Sharp Objects?** No

Liner Lid Present? No **Sharp Objects Are Protected?** Yes

Liner Lid Deformed? N/A **Layers Of Confinement** 1

Fill Factor 98

Bag Closure Method Twisted and Taped

Liquids

Liquid Present? No **Internal Container with Liquid** No

Internal Container with Liquid 0 pints **LA Candidate** No

Liquid Between Liner & Drum 0 pints **Containerized Liquid**

Total Liquid Amount 0 pints **Containerized Liquid Amt** 0 pints

Other Liquids 0 pints **Comment**

Prohibited Liquids Present No **Comment**

Contents-Drum or Box

	Value	Comment		Value	Comment
Lead?	No		**Mercury Present?**	No	
Wet Cell Batteries?	No		**Explosives?**	No	
Prohibited Compressed Gases?	No		**PCBs Present?**	Yes - Acceptable	PCB waste
Aerosol Cans?	No		**PCB Mass (lbs)**	303.21	
Non-Mixed Hazardous Waste Present?	No		**Sealed Containers Over 4L?**	No	

Non-Radionuclide Pyrophoric Materials Present? No

Waste exhibiting the characteristics of Ignitability, Corrosivity or Reactivity Present? No

Wastes Incompatible with backfill, seal and panel closure materials, container and packaging materials,shipping container or other wastes? No

Impenetrable Dense Objects? No

Waste Material Items

Packaging Materials

Material Item	Quantity	Unit	Unit Wt(lbs)	Item Wt(lbs)
Drum plastic bag	1.000	EACH	1.000	1.000
55-GAL DRUM (17c)	1.000	EACH	59.000	59.000

Waste Items byWeight

Material Item	Quantity	Unit	Unit Wt(lbs)	Item Wt(lbs)

Waste Items by Volume

Material Item	Quantity	Unit	Unit Wt(lbs)	Item Wt(lbs)

Batch Id RTR14-00037 **Container Id** 10510756 **Analysis Id** 0000095149

Waste Parameters

Waste Parameter	Remaining Weight %	Actual Weight Lbs
Iron-based Metals/Alloys	0.000	0.000
Aluminum-based Metals/Alloys	0.000	0.000
Other metals	0.000	0.000
Other Inorganic Materials	0.000	0.000
Cellulosics	0.000	0.000
Rubber	0.000	0.000
Plastic (Waste Materials)	0.000	0.000
Inorganic matrix	0.000	0.000
Organic matrix	100.000	303.205
Soils/gravel	0.000	0.000
Steel (packaging materials)	0.000	139.000
Plastic (packaging materials)	0.000	1.000
Cellulosics Packaging	0.000	0.000

Analysis Esignature History

Esig Approval Id	User Id	Esignature Date	Comment
2722685	CSIMMONS	26-MAR-2014 08:31	Rework
2719932	CSIMMONS	20-MAR-2014 15:47	Rework
2703057	SOLDHAM	24-FEB-2014 11:29	

Batch Id RTR14-00037 **Container Id** 10333865 **Analysis Id** 0000095150

Container Type C drum, 83 Gallon **Analysis Status** Pass

RTR Date 24-FEB-2014 11:48 **Gross Weight** 266.805 Lbs. **Net Weight** 122.805 Lbs.

Equipment Z-213-101 **Waste Matrix Code** S5490 **IDC** SD-177 Pre-1980 INL-Exhumed SDA Heterogeneous Debris

Recording Id 1RTR14-00022 **Procedure Id** INST-OI-12 **Revision**

Is Test Pattern Resolution Ok? Yes **Start Side** A **Replicate** 52 **Approval Level** SPM

Audio Visual Ok? Yes **Operator** No **OIO** No

SOLDHAM

Result Comment

The inner 55 gallon drum contains plastic sheeting and PPE.
The 55 is in good condition.
AK does not concur with the recommended IDC UN-00B for container 10333865 because waste is SDA debris. Instead, AK recommends an IDC of SD-177. CHD 2/27/14
Rework: recommended IDC SD-177 per AK. ESO 03/05/14
AK concurs with the recommended IDC, SD-177, for container 10333865. No AKR or NCR is necessary. CHD 03/06/14

Package

IDC Correct Yes **Recommended IDC** SD-177 **Summary Category** S5000

Idc Change Reason Per AK

Rigid Liner Present? No **LinerType** NO LINER

Liner Punctured? N/A **Sharp Objects?** No

Liner Lid Present? No **Sharp Objects Are Protected?** Yes

Liner Lid Deformed? N/A **Layers Of Confinement** 2

Fill Factor 85

Bag Closure Method Twisted and Taped

Liquids

Liquid Present? No **Internal Container with Liquid** No

Internal Container with Liquid 0 pints **LA Candidate** No

Liquid Between Liner & Drum 0 pints **Containerized Liquid**

Total Liquid Amount 0 pints **Containerized Liquid Amt** 0 pints

Other Liquids 0 pints **Comment**

Prohibited Liquids Present No **Comment**

Contents-Drum or Box

	Value	Comment		Value	Comment
Lead?	Yes, Acceptable	lead pieces	**Mercury Present?**	No	
Wet Cell Batteries?	No		**Explosives?**	No	
Prohibited Compressed Gases?	No		**PCBs Present?**	No	
Aerosol Cans?	No		**PCB Mass (lbs)**	0	
Non-Mixed Hazardous Waste Present?	No		**Sealed Containers Over 4L?**	No	

Non-Radionuclide Pyrophoric Materials Present? No

Waste exhibiting the characteristics of Ignitability, Corrosivity or Reactivity Present? No

Wastes Incompatible with backfill, seal and panel closure materials, container and packaging materials,shipping container or other wastes? No

Impenetrable Dense Objects? No

Waste Material Items

Packaging Materials

Material Item	Quantity	Unit	Unit Wt(lbs)	Item Wt(lbs)
Drum plastic bag	2.000	EACH	1.000	2.000
55-GAL DRUM (17c)	1.000	EACH	59.000	59.000

Waste Items byWeight

Material Item	Quantity	Unit	Unit Wt(lbs)	Item Wt(lbs)
misc. metal	1.000	EACH	4.000	4.000
lead pieces	1.000	EACH	0.010	0.010

Batch Id RTR14-00037 **Container Id** 10333865 **Analysis Id** 0000095150

Waste Items by Volume

Material Item	Quantity	Unit	Unit Wt(lbs)	Item Wt(lbs)
Oil-Dri (Inside 55 gal drum)	100.000	PINTS	0.420	42.000

Waste Parameters

Waste Parameter	Remaining Weight %	Actual Weight Lbs
Iron-based Metals/Alloys	0.000	4.000
Aluminum-based Metals/Alloys	0.000	0.000
Other metals	0.000	0.010
Other Inorganic Materials	0.000	42.000
Cellulosics	0.000	0.000
Rubber	0.000	0.000
Plastic (Waste Materials)	100.000	76.795
Inorganic matrix	0.000	0.000
Organic matrix	0.000	0.000
Soils/gravel	0.000	0.000
Steel (packaging materials)	0.000	142.000
Plastic (packaging materials)	0.000	2.000
Cellulosics Packaging	0.000	0.000

Analysis Esignature History

Esig Approval Id	User Id	Esignature Date	Comment
2711351	CHINKLE	06-MAR-2014 07:44	Batch is promoted. chd 3/6/14
2711104	SOLDHAM	05-MAR-2014 15:16	
2705837	CHINKLE	27-FEB-2014 13:49	This batch is returned for rework. AK does not concur with the recommended IDC change for containers 10512448, 10512153, 10512142, 10512141, 10511993, 10333865, 10289408, 10288404. CHD 2/27/14
2703072	SOLDHAM	24-FEB-2014 11:48	

Batch Id RTR14-00037 **Container Id** 10512448 **Analysis Id** 0000095153

Container Type C drum, 83 Gallon **Analysis Status** Pass

RTR Date 24-FEB-2014 12:31 **Gross Weight** 251.370 **Lbs.** **Net Weight** 107.370 **Lbs**

Equipment Z-213-101 **Waste Matrix Code** S5490 **IDC** BN-524 Pad 1 Cells 1 and 2 Non-PCB Debris

Recording Id 1RTR14-00022 **Procedure Id** INST-OI-12 **Revision** 52 **Approval Level** SPM

Is Test Pattern Resolution Ok? Yes **Start Side** A **Replicate** No **OIO** No

Audio Visual Ok? Yes **Operator** SOLDHAM

Result Comment The inner 55 gallon drum contains plastic sheeting and PPE.(This waste contains solid dry transformers.)
The 55 is in good condition.
AK does not concur with the recommended IDC change from BN-180 to BN-523 for container 10512448 because RTR SME review indicates that liquid and the transformers are in different parts of the container. Instead, AK recommends an IDC of BN-524. CHD 2/27/14
Rework: recommended IDC RF-524 per AK. ESO 03/05/14
AK concurs with the recommended IDC, BN-524, for container 10512448. No AKR or NCR is necessary. CHD 03/06/14
Rework: Added to the results comment waste discription for the transformers. Corrected The PCBs present ,and the prohibited liquids questions. cjs 03/20/14

Package

IDC Correct Yes **Recommended IDC** BN-524 **Summary Category** S5000

Idc Change Reason Per AK

Rigid Liner Present? No **LinerType** NO LINER

Liner Punctured? N/A **Sharp Objects?** No

Liner Lid Present? No **Sharp Objects Are Protected?** Yes

Liner Lid Deformed? N/A **Layers Of Confinement** 3

Fill Factor 90

Bag Closure Method Twisted and Taped

Liquids

Liquid Present? Yes **Internal Container with Liquid** No

Internal Container with Liquid 0 pints **LA Candidate** No

Liquid Between Liner & Drum 0 pints **Containerized Liquid**

Containerized Liquid Amt 0 pints

Total Liquid Amount .2 pints

Other Liquids .2 pints **Comment** 0.1 pint of liquid in bagging located at the bottom chine. 0.1 pint of liquid in bagging located at the middle chine

Prohibited Liquids Present No **Comment**

Contents-Drum or Box

	Value	Comment		Value	Comment
Lead?	No		Mercury Present?	No	
Wet Cell Batteries?	No		Explosives?	No	
Prohibited Compressed Gases?	No		PCBs Present?	No	
Aerosol Cans?	No		PCB Mass (lbs)	0	
Non-Mixed Hazardous Waste Present?	No		Sealed Containers Over 4L?	No	

Non-Radionuclide Pyrophoric Materials Present? No

Waste exhibiting the characteristics of Ignitability, Corrosivity or Reactivity Present? No

Wastes Incompatible with backfill, seal and panel closure materials, container and packaging materials,shipping container or other wastes? No

Impenetrable Dense Objects? No

Waste Material Items

Packaging Materials

Material Item	Quantity	Unit	Unit Wt(lbs)	Item Wt(lbs)
Drum plastic bag	2.000	EACH	1.000	2.000
55-GAL DRUM (17c)	1.000	EACH	59.000	59.000

Batch Id RTR14-00037 **Container Id** 10512448 **Analysis Id** 0000095153

Waste Items byWeight

Material Item	Quantity	Unit	Unit Wt(lbs)	Item Wt(lbs)
transformers	2.000	EACH	5.000	10.000
misc. metal	15.000	EACH	1.000	15.000
Fiber pack	1.000	EACH	6.000	6.000
Plastic bag for waste	4.000	EACH	0.250	1.000
D-cell Battery	2.000	EACH	0.250	0.500

Waste Items by Volume

Material Item	Quantity	Unit	Unit Wt(lbs)	Item Wt(lbs)
Oil-Dri (Inside 55 gal drum)	8.000	PINTS	0.420	3.360
Liquids for Other Inorganics	0.200	PINTS	1.000	0.200

Waste Parameters

Waste Parameter	Remaining Weight %	Actual Weight Lbs
Iron-based Metals/Alloys	0.000	15.000
Aluminum-based Metals/Alloys	0.000	0.000
Other metals	0.000	10.000
Other Inorganic Materials	0.000	3.560
Cellulosics	0.000	6.000
Rubber	0.000	0.000
Plastic (Waste Materials)	100.000	72.310
Inorganic matrix	0.000	0.000
Organic matrix	0.000	0.500
Soils/gravel	0.000	0.000
Steel (packaging materials)	0.000	142.000
Plastic (packaging materials)	0.000	2.000
Cellulosics Packaging	0.000	0.000

Analysis Esignature History

Esig Approval Id	User Id	Esignature Date	Comment
2719963	CSIMMONS	20-MAR-2014 16:02	Rework
2711346	CHINKLE	06-MAR-2014 07:44	Batch is promoted. chd 3/6/14
2711113	SOLDHAM	05-MAR-2014 15:30	Rework per AK
2705831	CHINKLE	27-FEB-2014 13:49	This batch is returned for rework. AK does not concur with the recommended IDC change for containers 10512448, 10512153, 10512142, 10512141, 10511993, 10333865, 10289408, 10288404. CHD 2/27/14
2703081	SOLDHAM	24-FEB-2014 12:31	

Batch Id RTR14-00037 **Container Id** 10333865 **Analysis Id** 0000095154

Container Type C drum, 83 Gallon **Analysis Status** Pass

RTR Date 24-FEB-2014 12:57 **Gross Weight** 266.805 **Lbs.** **Net Weight** 123.805 **Lbs.**

Equipment Z-213-101 **Waste Matrix Code** S5490 **IDC** SD-177 Pre-1980 INL-Exhumed SDA Heterogeneous Debris

Recording Id 1RTR14-00022 **Procedure Id** INST-OI-12 **Revision** 52

Is Test Pattern Resolution Ok? Yes **Start Side** A **Replicate** No **Approval Level** SPM

Audio Visual Ok? Yes **Operator** KKEARN **OIO** Yes

Result Comment
Waste consists of plastic sheeting

Package

IDC Correct Yes **Recommended IDC** **Summary Category** S5000

Idc Change Reason

Rigid Liner Present? No **LinerType** NO LINER

Liner Punctured? N/A **Sharp Objects?** No

Liner Lid Present? No **Sharp Objects Are Protected?** Yes

Liner Lid Deformed? N/A **Layers Of Confinement** 2

Fill Factor 85

Bag Closure Method Twisted and Taped

Liquids

Liquid Present? No **Internal Container with Liquid** No

Internal Container with Liquid 0 pints **LA Candidate** No

Liquid Between Liner & Drum 0 pints **Containerized Liquid**

Total Liquid Amount 0 pints **Containerized Liquid Amt** 0 pints

Other Liquids 0 pints **Comment**

Prohibited Liquids Present No **Comment**

Contents-Drum or Box

	Value	Comment		Value	Comment
Lead?	Yes, Acceptable	lead TIDs	**Mercury Present?**	No	
Wet Cell Batteries?	No		**Explosives?**	No	
Prohibited Compressed Gases?	No		**PCBs Present?**	No	
Aerosol Cans?	No		**PCB Mass (lbs)**	0	
Non-Mixed Hazardous Waste Present?	No		**Sealed Containers Over 4L?**	No	

Non-Radionuclide Pyrophoric Materials Present? No

Waste exhibiting the characteristics of Ignitability, Corrosivity or Reactivity Present? No

Wastes Incompatible with backfill, seal and panel closure materials, container and packaging materials,shipping container or other wastes? No

Impenetrable Dense Objects? No

Waste Material Items

Packaging Materials

Material Item	Quantity	Unit	Unit Wt(lbs)	Item Wt(lbs)
Drum plastic bag	1.000	EACH	1.000	1.000
55-GAL DRUM (17c)	1.000	EACH	59.000	59.000

Waste Items byWeight

Material Item	Quantity	Unit	Unit Wt(lbs)	Item Wt(lbs)
wire and scrap metal	1.000	EACH	6.000	6.000
lead TIDs	1.000	EACH	0.500	0.500
Plastic bag for waste	1.000	EACH	0.250	0.250

Waste Items by Volume

Material Item	Quantity	Unit	Unit Wt(lbs)	Item Wt(lbs)
Oil-Dri (Inside 55 gal drum)	120.000	PINTS	0.420	50.400

Batch Id RTR14-00037 **Container Id** 10333865 **Analysis Id** 0000095154

Waste Parameters

Waste Parameter	Remaining Weight %	Actual Weight Lbs
Iron-based Metals/Alloys	0.000	6.000
Aluminum-based Metals/Alloys	0.000	0.000
Other metals	0.000	0.500
Other Inorganic Materials	0.000	50.400
Cellulosics	0.000	0.000
Rubber	0.000	0.000
Plastic (Waste Materials)	100.000	66.905
Inorganic matrix	0.000	0.000
Organic matrix	0.000	0.000
Soils/gravel	0.000	0.000
Steel (packaging materials)	0.000	142.000
Plastic (packaging materials)	0.000	1.000
Cellulosics Packaging	0.000	0.000

RTR Independent Observation

Obsolete	Performed	User Name	Checklist	Answer
No	13-MAR-2014 14:14	DLEE	1.Was an independent observation performed?	Yes
			2.Were all items on the recording media identified correctly in WTS?	Yes
			3.Do you agree with the operator?	Yes

Comment OIO Check completed.

Independent Observation Esignature History

Esig Approval Id	User Id	Esignature Date	Comment
2716302	DLEE	13-MAR-2014 14:14	OIO Check completed.

Analysis Esignature History

Esig Approval Id	User Id	Esignature Date	Comment
2703083	KKEARN	24-FEB-2014 12:57	

Batch Id RTR14-00037 **Container Id** 10510756 **Analysis Id** 0000095155

Container Type 7A85 85 Gallon Open Head drum, DOT 7A **Analysis Status** Pass

RTR Date 24-FEB-2014 13:11 **Gross Weight** 443.205 **Lbs.** **Net Weight** 303.205 **Lbs**

Equipment Z-213-101 **Waste Matrix Code** S3114 **IDC** RF-003 Organic Setups, Oil Solids

Recording Id 1RTR14-00022 **Procedure Id** INST-OI-12 **Revision** 52 **Approval Level** SPM

Is Test Pattern Resolution Ok? Yes **Start Side** A **Replicate** Yes **OIO** No

Audio Visual Ok? Yes **Operator** KKEARN

Result Comment Waste consists of a sludge

Package

IDC Correct Yes **Recommended IDC** **Summary Category** S3000

Idc Change Reason

Rigid Liner Present? No **LinerType** NO LINER

Liner Punctured? N/A **Sharp Objects?** No

Liner Lid Present? No **Sharp Objects Are Protected?** Yes

Liner Lid Deformed? N/A **Layers Of Confinement** 1

Fill Factor 98

Bag Closure Method Twisted and Taped

Liquids

Liquid Present? No **Internal Container with Liquid** No

Internal Container with Liquid 0 pints **LA Candidate** No

Liquid Between Liner & Drum 0 pints **Containerized Liquid**

Total Liquid Amount 0 pints **Containerized Liquid Amt** 0 pints

Other Liquids 0 pints **Comment**

Prohibited Liquids Present No **Comment**

Contents-Drum or Box

	Value	Comment		Value	Comment
Lead?	No		**Mercury Present?**	No	
Wet Cell Batteries?	No		**Explosives?**	No	
Prohibited Compressed Gases?	No		**PCBs Present?**	Yes - Acceptable	RF-003
Aerosol Cans?	No		**PCB Mass (lbs)**	303.21	
Non-Mixed Hazardous Waste Present?	No		**Sealed Containers Over 4L?**	No	

Non-Radionuclide Pyrophoric Materials Present? No

Waste exhibiting the characteristics of Ignitability, Corrosivity or Reactivity Present? No

Wastes Incompatible with backfill, seal and panel closure materials, container and packaging materials,shipping container or other wastes? No

Impenetrable Dense Objects? No

Waste Material Items

Packaging Materials

Material Item	Quantity	Unit	Unit Wt(lbs)	Item Wt(lbs)
Drum plastic bag	1.000	EACH	1.000	1.000
55-GAL DRUM (17c)	1.000	EACH	59.000	59.000

Waste Items byWeight

Material Item	Quantity	Unit	Unit Wt(lbs)	Item Wt(lbs)

Waste Items by Volume

Material Item	Quantity	Unit	Unit Wt(lbs)	Item Wt(lbs)

Batch Id RTR14-00037 **Container Id** 10510756 **Analysis Id** 0000095155

Waste Parameters

Waste Parameter	Remaining Weight %	Actual Weight Lbs
Iron-based Metals/Alloys	0.000	0.000
Aluminum-based Metals/Alloys	0.000	0.000
Other metals	0.000	0.000
Other Inorganic Materials	0.000	0.000
Cellulosics	0.000	0.000
Rubber	0.000	0.000
Plastic (Waste Materials)	0.000	0.000
Inorganic matrix	0.000	0.000
Organic matrix	100.000	303.205
Soils/gravel	0.000	0.000
Steel (packaging materials)	0.000	139.000
Plastic (packaging materials)	0.000	1.000
Cellulosics Packaging	0.000	0.000

Analysis Esignature History

Esig Approval Id	User Id	Esignature Date	Comment
2703088	KKEARN	24-FEB-2014 13:11	

Batch Id RTR14-00037 **Container Id** 10510769 **Analysis Id** 0000095157

Container Type 7A85 85 Gallon Open Head drum, DOT 7A **Analysis Status** Pass

RTR Date 24-FEB-2014 13:49 **Gross Weight** 590.940 **Lbs.** **Net Weight** 449.940 **Lbs.**

Equipment Z-213-101 **Waste Matrix Code** S3900 **IDC** BN-511 PCB Organic Homogeneous Solids

Recording Id 1RTR14-00022 **Procedure Id** INST-OI-12 **Revision** 52 **Approval Level** SPM

Is Test Pattern Resolution Ok? Yes **Start Side** A **Replicate** No **OIO** No

Audio Visual Ok? Yes **Operator** KKEARN

Result Comment Waste consists of a homogeneous solid sludge
AK concurs with the recommended IDC, BN-511, for container 10510769. No AKR or NCR is necessary. CHD 2/27/14
Rework: Added to waste discription. The top of the 55 gal drum is very rusty with holes. cjs 03/20/14

Package

IDC Correct Yes **Recommended IDC** BN-511 **Summary Category** S3000

Idc Change Reason Waste consists of a homogeneous solid

Rigid Liner Present? No **LinerType** NO LINER

Liner Punctured? N/A **Sharp Objects?** No

Liner Lid Present? No **Sharp Objects Are Protected?** Yes

Liner Lid Deformed? N/A **Layers Of Confinement** 2

Fill Factor 90

Bag Closure Method Twisted and Taped

Liquids

Liquid Present? No **Internal Container with Liquid** No

Internal Container with Liquid 0 pints **LA Candidate** No

Liquid Between Liner & Drum 0 pints **Containerized Liquid**

Total Liquid Amount 0 pints **Containerized Liquid Amt** 0 pints

Other Liquids 0 pints **Comment**

Prohibited Liquids Present No **Comment**

Contents-Drum or Box

	Value	Comment		Value	Comment
Lead?	No		**Mercury Present?**	No	
Wet Cell Batteries?	No		**Explosives?**	No	
Prohibited Compressed Gases?	No		**PCBs Present?**	Yes - Acceptable	BN-511
Aerosol Cans?	No		**PCB Mass (lbs)**	449.94	
Non-Mixed Hazardous Waste Present?	No		**Sealed Containers Over 4L?**	No	

Non-Radionuclide Pyrophoric Materials Present? No

Waste exhibiting the characteristics of Ignitability, Corrosivity or Reactivity Present? No

Wastes Incompatible with backfill, seal and panel closure materials, container and packaging materials,shipping container or other wastes? No

Impenetrable Dense Objects? No

Waste Material Items

Packaging Materials

Material Item	Quantity	Unit	Unit Wt(lbs)	Item Wt(lbs)
Drum plastic bag	2.000	EACH	1.000	2.000
55-GAL DRUM (17c)	1.000	EACH	59.000	59.000

Waste Items byWeight

Material Item	Quantity	Unit	Unit Wt(lbs)	Item Wt(lbs)
sheet metal	1.000	EACH	20.000	20.000
plastic sheeting	1.000	EACH	3.000	3.000

Waste Items by Volume

Material Item	Quantity	Unit	Unit Wt(lbs)	Item Wt(lbs)

Batch Id RTR14-00037 **Container Id** 10510769 **Analysis Id** 0000095157

Waste Parameters

Waste Parameter	Remaining Weight %	Actual Weight Lbs
Iron-based Metals/Alloys	0.000	20.000
Aluminum-based Metals/Alloys	0.000	0.000
Other metals	0.000	0.000
Other Inorganic Materials	0.000	0.000
Cellulosics	0.000	0.000
Rubber	0.000	0.000
Plastic (Waste Materials)	0.000	3.000
Inorganic matrix	0.000	0.000
Organic matrix	100.000	426.940
Soils/gravel	0.000	0.000
Steel (packaging materials)	0.000	139.000
Plastic (packaging materials)	0.000	2.000
Cellulosics Packaging	0.000	0.000

Analysis Esignature History

Esig Approval Id	User Id	Esignature Date	Comment
2719941	CSIMMONS	20-MAR-2014 15:52	Rework
2705836	CHINKLE	27-FEB-2014 13:49	This batch is returned for rework. AK does not concur with the recommended IDC change for containers 10512448, 10512153, 10512142, 10512141, 10511993, 10333865, 10289408, 10288404. CHD 2/27/14
2703097	KKEARN	24-FEB-2014 13:49	

Batch Id RTR14-00037 **Container Id** 10512141 **Analysis Id** 0000095161

Container Type C drum, 83 Gallon **Analysis Status** Pass

RTR Date 24-FEB-2014 14:46 **Gross Weight** 174.195 **Lbs.** **Net Weight** 30.195 **Lbs**

Equipment Z-213-101 **Waste Matrix Code** S5490 **IDC** RF-760 RFP Debris

Recording Id 1RTR14-00022 **Procedure Id** INST-OI-12 **Revision** 52 **Approval Level** SPM

Is Test Pattern Resolution Ok? Yes **Start Side** A **Replicate** No **OIO** No

Audio Visual Ok? Yes **Operator** KKEARN

Result Comment Waste consists of plastic sheeting and bags
AK does not concur with the recommended IDC change from BN-180 to BN-524 for container 10512141 because waste is RF debris retrieved from Pad 1, cells 1 and 2. Instead, AK recommends an IDC of RF-760. CHD 2/27/14
Rework: recommended IDC RF-760 per AK. ESO 03/05/14
AK concurs with the recommended IDC, RF-760, for container 10512141. No AKR or NCR is necessary. CHD 03/06/14

Package

IDC Correct Yes **Recommended IDC** RF-760 **Summary Category** S5000

Idc Change Reason Per AK

Rigid Liner Present? No **LinerType** NO LINER

Liner Punctured? N/A **Sharp Objects?** No

Liner Lid Present? No **Sharp Objects Are Protected?** Yes

Liner Lid Deformed? N/A **Layers Of Confinement** 3

Fill Factor 95

Bag Closure Method Twisted and Taped

Liquids

Liquid Present? No **Internal Container with Liquid** No

Internal Container with Liquid 0 pints **LA Candidate** No

Liquid Between Liner & Drum 0 pints **Containerized Liquid**

Total Liquid Amount 0 pints **Containerized Liquid Amt** 0 pints

Other Liquids 0 pints **Comment**

Prohibited Liquids Present No **Comment**

Contents-Drum or Box

	Value	Comment		Value	Comment
Lead?	No		**Mercury Present?**	No	
Wet Cell Batteries?	No		**Explosives?**	No	
Prohibited Compressed Gases?	No		**PCBs Present?**	No	
Aerosol Cans?	No		**PCB Mass (lbs)**	0	
Non-Mixed Hazardous Waste Present?	No		**Sealed Containers Over 4L?**	No	

Non-Radionuclide Pyrophoric Materials Present? No

Waste exhibiting the characteristics of Ignitability, Corrosivity or Reactivity Present? No

Wastes Incompatible with backfill, seal and panel closure materials, container and packaging materials,shipping container or other wastes? No

Impenetrable Dense Objects? No

Waste Material Items

Packaging Materials

Material Item	Quantity	Unit	Unit Wt(lbs)	Item Wt(lbs)
Drum plastic bag	2.000	EACH	1.000	2.000
55-GAL DRUM (17c)	1.000	EACH	59.000	59.000

Waste Items byWeight

Material Item	Quantity	Unit	Unit Wt(lbs)	Item Wt(lbs)
scrap metal	1.000	EACH	0.500	0.500
Plastic bag for waste	1.000	EACH	0.250	0.250

Waste Items by Volume

Material Item	Quantity	Unit	Unit Wt(lbs)	Item Wt(lbs)
Oil-Dri (Inside 55 gal drum)	4.000	PINTS	0.420	1.680

Batch Id RTR14-00037 **Container Id** 10512141 **Analysis Id** 0000095161

Waste Parameters

Waste Parameter	Remaining Weight %	Actual Weight Lbs
Iron-based Metals/Alloys	0.000	0.500
Aluminum-based Metals/Alloys	0.000	0.000
Other metals	0.000	0.000
Other Inorganic Materials	0.000	1.680
Cellulosics	0.000	0.000
Rubber	0.000	0.000
Plastic (Waste Materials)	100.000	28.015
Inorganic matrix	0.000	0.000
Organic matrix	0.000	0.000
Soils/gravel	0.000	0.000
Steel (packaging materials)	0.000	142.000
Plastic (packaging materials)	0.000	2.000
Cellulosics Packaging	0.000	0.000
MLLW Waste	0.000	0.000

Analysis Esignature History

Esig Approval Id	User Id	Esignature Date	Comment
2711349	CHINKLE	06-MAR-2014 07:44	Batch is promoted. chd 3/6/14
2711108	SOLDHAM	05-MAR-2014 15:23	
2705834	CHINKLE	27-FEB-2014 13:49	This batch is returned for rework. AK does not concur with the recommended IDC change for containers 10512448, 10512153, 10512142, 10512141, 10511993, 10333865, 10289408, 10288404. CHD 2/27/14
2703172	KKEARN	24-FEB-2014 14:46	

Batch Id RTR14-00037 **Container Id** 10498328 **Analysis Id** 0000095162

Container Type 7A85 85 Gallon Open Head drum, DOT 7A **Analysis Status** Pass

RTR Date 24-FEB-2014 15:07 **Gross Weight** 220.500 **Lbs.** **Net Weight** 79.500 **Lbs**

Equipment Z-213-101 **Waste Matrix Code** S5490 **IDC** RF-760 RFP Debris

Recording Id 1RTR14-00022 **Procedure Id** INST-OI-12 **Revision** 52 **Approval Level** SPM

Is Test Pattern Resolution Ok? Yes **Start Side** A **Replicate** No **OIO** No

Audio Visual Ok? Yes **Operator** KKEARN

Result Comment Waste consists of plastic sheeting, bags, bottles, and PPE

Package

IDC Correct Yes **Recommended IDC** **Summary Category** S5000

Idc Change Reason

Rigid Liner Present? No **LinerType** NO LINER

Liner Punctured? N/A **Sharp Objects?** No

Liner Lid Present? No **Sharp Objects Are Protected?** Yes

Liner Lid Deformed? N/A **Layers Of Confinement** 3

Fill Factor 85

Bag Closure Method Twisted and Taped

Liquids

Liquid Present? No **Internal Container with Liquid** No

Internal Container with Liquid 0 pints **LA Candidate** No

Liquid Between Liner & Drum 0 pints **Containerized Liquid**

Containerized Liquid Amt 0 pints

Total Liquid Amount 0 pints

Other Liquids 0 pints **Comment**

Prohibited Liquids Present No **Comment**

Contents-Drum or Box

	Value	Comment		Value	Comment
Lead?	No		**Mercury Present?**	No	
Wet Cell Batteries?	No		**Explosives?**	No	
Prohibited Compressed Gases?	No		**PCBs Present?**	No	
Aerosol Cans?	No		**PCB Mass (lbs)**	0	
Non-Mixed Hazardous Waste Present?	No		**Sealed Containers Over 4L?**	No	

Non-Radionuclide Pyrophoric Materials Present? No

Waste exhibiting the characteristics of Ignitability, Corrosivity or Reactivity Present? No

Wastes Incompatible with backfill, seal and panel closure materials, container and packaging materials,shipping container or other wastes? No

Impenetrable Dense Objects? No

Waste Material Items

Packaging Materials

Material Item	Quantity	Unit	Unit Wt(lbs)	Item Wt(lbs)
Drum plastic bag	2.000	EACH	1.000	2.000
55-GAL DRUM (17c)	1.000	EACH	59.000	59.000

Waste Items byWeight

Material Item	Quantity	Unit	Unit Wt(lbs)	Item Wt(lbs)
tools and scrap metal	1.000	EACH	2.000	2.000
respirator	1.000	EACH	2.000	2.000
Plastic bag for waste	1.000	EACH	0.250	0.250
D-cell Battery	5.000	EACH	0.250	1.250
Respirator Cartridges	2.000	EACH	0.250	0.500

Waste Items by Volume

Material Item	Quantity	Unit	Unit Wt(lbs)	Item Wt(lbs)
Oil-Dri (Inside 55 gal drum)	8.000	PINTS	0.420	3.360

Batch Id RTR14-00037 **Container Id** 10498328 **Analysis Id** 0000095162

Waste Parameters

Waste Parameter	Remaining Weight %	Actual Weight Lbs
Iron-based Metals/Alloys	0.000	2.000
Aluminum-based Metals/Alloys	0.000	0.350
Other metals	0.000	1.250
Other Inorganic Materials	0.000	3.360
Cellulosics	0.000	0.150
Rubber	0.000	2.000
Plastic (Waste Materials)	100.000	70.390
Inorganic matrix	0.000	0.000
Organic matrix	0.000	0.000
Soils/gravel	0.000	0.000
Steel (packaging materials)	0.000	139.000
Plastic (packaging materials)	0.000	2.000
Cellulosics Packaging	0.000	0.000
MLLW Waste	0.000	0.000

Analysis Esignature History

Esig Approval Id	User Id	Esignature Date	Comment
2703196	KKEARN	24-FEB-2014 15:07	

Batch Id RTR14-00037 **Container Id** 10512153 **Analysis Id** 0000095164

Container Type C drum, 83 Gallon **Analysis Status** Pass

RTR Date 24-FEB-2014 15:18 **Gross Weight** 178.605 **Lbs.** **Net Weight** 34.605 **Lbs**

Equipment Z-213-101 **Waste Matrix Code** S5490 **IDC** RF-760 RFP Debris

Recording Id 1RTR14-00022 **Procedure Id** INST-OI-12 **Revision** 52 **Approval Level** SPM

Is Test Pattern Resolution Ok? Yes **Start Side** A **Replicate** No **OIO** No

Audio Visual Ok? Yes **Operator** KKEARN

Result Comment Waste consists of plastic sheeting
AK does not concur with the recommended IDC change from BN-180 to BN-524 for container 10512153 because waste is RF debris retrieved from Pad 1, cells 1 and 2. Instead, AK recommends an IDC of RF-760. CHD 2/27/14
Rework: recommended IDC RF-760 per AK. ESO 03/05/14
AK concurs with the recommended IDC, RF-760, for container 10512153. No AKR or NCR is necessary. CHD 03/06/14

Package

IDC Correct Yes **Recommended IDC** RF-760 **Summary Category** S5000

Idc Change Reason Per AK

Rigid Liner Present? No **LinerType** NO LINER

Liner Punctured? N/A **Sharp Objects?** No

Liner Lid Present? No **Sharp Objects Are Protected?** Yes

Liner Lid Deformed? N/A **Layers Of Confinement** 2

Fill Factor 85

Bag Closure Method Twisted and Taped

Liquids

Liquid Present? No **Internal Container with Liquid** No

Internal Container with Liquid 0 pints **LA Candidate** No

Liquid Between Liner & Drum 0 pints **Containerized Liquid**

Total Liquid Amount 0 pints **Containerized Liquid Amt** 0 pints

Other Liquids 0 pints **Comment**

Prohibited Liquids Present No **Comment**

Contents-Drum or Box

	Value	Comment		Value	Comment
Lead?	No		**Mercury Present?**	No	
Wet Cell Batteries?	No		**Explosives?**	No	
Prohibited Compressed Gases?	No		**PCBs Present?**	No	
Aerosol Cans?	No		**PCB Mass (lbs)**	0	
Non-Mixed Hazardous Waste Present?	No		**Sealed Containers Over 4L?**	No	

Non-Radionuclide Pyrophoric Materials Present? No

Waste exhibiting the characteristics of Ignitability, Corrosivity or Reactivity Present? No

Wastes Incompatible with backfill, seal and panel closure materials, container and packaging materials,shipping container or other wastes? No

Impenetrable Dense Objects? No

Waste Material Items

Packaging Materials

Material Item	Quantity	Unit	Unit Wt(lbs)	Item Wt(lbs)
Drum plastic bag	2.000	EACH	1.000	2.000
55-GAL DRUM (17c)	1.000	EACH	59.000	59.000

Waste Items byWeight

Material Item	Quantity	Unit	Unit Wt(lbs)	Item Wt(lbs)
scrap metal	1.000	EACH	3.000	3.000

Waste Items by Volume

Material Item	Quantity	Unit	Unit Wt(lbs)	Item Wt(lbs)
Oil-Dri (Inside 55 gal drum)	6.000	PINTS	0.420	2.520

Batch Id RTR14-00037 **Container Id** 10512153 **Analysis Id** 0000095164

Waste Parameters

Waste Parameter	Remaining Weight %	Actual Weight Lbs
Iron-based Metals/Alloys	0.000	3.000
Aluminum-based Metals/Alloys	0.000	0.000
Other metals	0.000	0.000
Other Inorganic Materials	0.000	2.520
Cellulosics	0.000	0.000
Rubber	0.000	0.000
Plastic (Waste Materials)	100.000	29.085
Inorganic matrix	0.000	0.000
Organic matrix	0.000	0.000
Soils/gravel	0.000	0.000
Steel (packaging materials)	0.000	142.000
Plastic (packaging materials)	0.000	2.000
Cellulosics Packaging	0.000	0.000
MLLW Waste	0.000	0.000

Analysis Esignature History

Esig Approval Id	User Id	Esignature Date	Comment
2711347	CHINKLE	06-MAR-2014 07:44	Batch is promoted. chd 3/6/14
2711110	SOLDHAM	05-MAR-2014 15:26	Rework per AK
2705832	CHINKLE	27-FEB-2014 13:49	This batch is returned for rework. AK does not concur with the recommended IDC change for containers 10512448, 10512153, 10512142, 10512141, 10511993, 10333865, 10289408, 10288404. CHD 2/27/14
2703210	KKEARN	24-FEB-2014 15:18	

Batch Id RTR14-00037 **Container Id** 10511993 **Analysis Id** 0000095165

Container Type C drum, 83 Gallon **Analysis Status** Pass

RTR Date 24-FEB-2014 15:53 **Gross Weight** 205.065 Lbs. **Net Weight** 61.065 Lbs

Equipment Z-213-101 **Waste Matrix Code** S5490 **IDC** RF-760 RFP Debris

Recording Id 1RTR14-00022 **Procedure Id** INST-OI-12 **Revision** 52 **Approval Level** SPM

Is Test Pattern Resolution Ok? Yes **Start Side** A **Replicate** No **OIO** No

Audio Visual Ok? Yes **Operator** KKEARN

Result Comment Waste consists of plastic sheeting and PPE
AK does not concur with the recommended IDC change from BN-180 to BN-524 for container 10511993 because waste is RF debris retrieved from Pad 1, cells 1 and 2. Instead, AK recommends an IDC of RF-760. CHD 2/27/14
Rework: recommended IDC RF-760 per AK. ESO 03/05/14
AK concurs with the recommended IDC, RF-760, for container 10511993. No AKR or NCR is necessary. CHD 03/06/14

Package

IDC Correct Yes **Recommended IDC** RF-760 **Summary Category** S5000

Idc Change Reason Per AK

Rigid Liner Present? No **LinerType** NO LINER

Liner Punctured? N/A **Sharp Objects?** No

Liner Lid Present? No **Sharp Objects Are Protected?** Yes

Liner Lid Deformed? N/A **Layers Of Confinement** 2

Fill Factor 95

Bag Closure Method Twisted and Taped

Liquids

Liquid Present? No **Internal Container with Liquid** No

Internal Container with Liquid 0 pints **LA Candidate** No

Liquid Between Liner & Drum 0 pints **Containerized Liquid**

Total Liquid Amount 0 pints **Containerized Liquid Amt** 0 pints

Other Liquids 0 pints **Comment**

Prohibited Liquids Present No **Comment**

Contents-Drum or Box

	Value	Comment		Value	Comment
Lead?	Yes, Acceptable	lead tape, fuse, and scrap	**Mercury Present?**	No	
Wet Cell Batteries?	No		**Explosives?**	No	
Prohibited Compressed Gases?	No		**PCBs Present?**	No	
Aerosol Cans?	No		**PCB Mass (lbs)**	0	
Non-Mixed Hazardous Waste Present?	No		**Sealed Containers Over 4L?**	No	

Non-Radionuclide Pyrophoric Materials Present? No

Waste exhibiting the characteristics of Ignitability, Corrosivity or Reactivity Present? No

Wastes Incompatible with backfill, seal and panel closure materials, container and packaging materials,shipping container or other wastes? No

Impenetrable Dense Objects? No

Waste Material Items

Packaging Materials

Material Item	Quantity	Unit	Unit Wt(lbs)	Item Wt(lbs)
Drum plastic bag	2.000	EACH	1.000	2.000
55-GAL DRUM (17c)	1.000	EACH	59.000	59.000

Waste Items byWeight

Material Item	Quantity	Unit	Unit Wt(lbs)	Item Wt(lbs)
wire, bolts, and scrap metal	1.000	EACH	8.000	8.000
cardboard	1.000	EACH	2.000	2.000
lead scrap	1.000	EACH	2.000	2.000

Batch Id RTR14-00037 **Container Id** 10511993 **Analysis Id** 0000095165

Waste Items by Volume

Material Item	Quantity	Unit	Unit Wt(lbs)	Item Wt(lbs)
Oil-Dri (Inside 55 gal drum)	3.000	PINTS	0.420	1.260

Waste Parameters

Waste Parameter	Remaining Weight %	Actual Weight Lbs
Iron-based Metals/Alloys	0.000	8.000
Aluminum-based Metals/Alloys	0.000	0.000
Other metals	0.000	2.000
Other Inorganic Materials	0.000	1.260
Cellulosics	0.000	2.000
Rubber	0.000	0.000
Plastic (Waste Materials)	100.000	47.805
Inorganic matrix	0.000	0.000
Organic matrix	0.000	0.000
Soils/gravel	0.000	0.000
Steel (packaging materials)	0.000	142.000
Plastic (packaging materials)	0.000	2.000
Cellulosics Packaging	0.000	0.000
MLLW Waste	0.000	0.000

Analysis Esignature History

Esig Approval Id	User Id	Esignature Date	Comment
2711350	CHINKLE	06-MAR-2014 07:44	Batch is promoted. chd 3/6/14
2711107	SOLDHAM	05-MAR-2014 15:20	
2705835	CHINKLE	27-FEB-2014 13:49	This batch is returned for rework. AK does not concur with the recommended IDC change for containers 10512448, 10512153, 10512142, 10512141, 10511993, 10333865, 10289408, 10288404. CHD 2/27/14
2703259	KKEARN	24-FEB-2014 15:53	

Batch Id RTR14-00037 **Container Id** 10267983 **Analysis Id** 0000095169

Container Type C drum, 83 Gallon **Analysis Status** Pass

RTR Date 24-FEB-2014 16:49 **Gross Weight** 235.935 **Lbs.** **Net Weight** 92.935 **Lbs**

Equipment Z-213-101 **Waste Matrix Code** S5490 **IDC** RF-750 Pits 11 & 12 Debris

Recording Id 1RTR14-00022 **Procedure Id** INST-OI-12 **Revision** 52 **Approval Level** SPM

Is Test Pattern Resolution Ok? Yes **Start Side** A **Replicate** No **OIO** No

Audio Visual Ok? Yes **Operator** KKEARN

Result Comment Waste consists of plastic sheeting and PPE
AK concurs with the recommended IDC, RF-750, for container 10267983. No AKR or NCR is necessary. CHD 2/27/14

Package

IDC Correct Yes **Recommended IDC** **Summary Category** S5000

Idc Change Reason

Rigid Liner Present? No **LinerType** NO LINER

Liner Punctured? N/A **Sharp Objects?** No

Liner Lid Present? No **Sharp Objects Are Protected?** Yes

Liner Lid Deformed? N/A **Layers Of Confinement** 2

Fill Factor 85

Bag Closure Method Twisted and Taped

Liquids

Liquid Present? No **Internal Container with Liquid** No

Internal Container with Liquid 0 pints **LA Candidate** No

Liquid Between Liner & Drum 0 pints **Containerized Liquid**

Containerized Liquid Amt 0 pints

Total Liquid Amount 0 pints

Other Liquids 0 pints **Comment**

Prohibited Liquids Present No **Comment**

Contents-Drum or Box

	Value	Comment		Value	Comment
Lead?	Yes, Acceptable	lead TIDs	**Mercury Present?**	No	
Wet Cell Batteries?	No		**Explosives?**	No	
Prohibited Compressed Gases?	Yes	aerosol can	**PCBs Present?**	No	
Aerosol Cans?	Yes	aerosol can	**PCB Mass (lbs)**	0	
Non-Mixed Hazardous Waste Present?	No		**Sealed Containers Over 4L?**	No	

Non-Radionuclide Pyrophoric Materials Present? No

Waste exhibiting the characteristics of Ignitability, Corrosivity or Reactivity Present? No

Wastes Incompatible with backfill, seal and panel closure materials, container and packaging materials,shipping container or other wastes? No

Impenetrable Dense Objects? No

Waste Material Items

Packaging Materials

Material Item	Quantity	Unit	Unit Wt(lbs)	Item Wt(lbs)
Drum plastic bag	1.000	EACH	1.000	1.000
55-GAL DRUM (17c)	1.000	EACH	59.000	59.000

Waste Items byWeight

Material Item	Quantity	Unit	Unit Wt(lbs)	Item Wt(lbs)
scrap metal	1.000	EACH	6.000	6.000
lead TIDs	1.000	EACH	1.000	1.000
Plastic bag for waste	1.000	EACH	0.250	0.250
Aerosol Can	1.000	EACH	0.240	0.240
D-cell Battery	2.000	EACH	0.250	0.500

Batch Id RTR14-00037 **Container Id** 10267983 **Analysis Id** 0000095169

Waste Items by Volume

Material Item	Quantity	Unit	Unit Wt(lbs)	Item Wt(lbs)
Oil-Dri (Inside 55 gal drum)	75.000	PINTS	0.420	31.500

Waste Parameters

Waste Parameter	Remaining Weight %	Actual Weight Lbs
Iron-based Metals/Alloys	0.000	6.240
Aluminum-based Metals/Alloys	0.000	0.000
Other metals	0.000	1.500
Other Inorganic Materials	0.000	31.500
Cellulosics	0.000	0.000
Rubber	0.000	0.000
Plastic (Waste Materials)	100.000	53.695
Inorganic matrix	0.000	0.000
Organic matrix	0.000	0.000
Soils/gravel	0.000	0.000
Steel (packaging materials)	0.000	142.000
Plastic (packaging materials)	0.000	1.000
Cellulosics Packaging	0.000	0.000

Analysis Esignature History

Esig Approval Id	User Id	Esignature Date	Comment
2705841	CHINKLE	27-FEB-2014 13:49	This batch is returned for rework. AK does not concur with the recommended IDC change for containers 10512448, 10512153, 10512142, 10512141, 10511993, 10333865, 10289408, 10288404. CHD 2/27/14
2703331	KKEARN	24-FEB-2014 16:49	

Batch Id RTR14-00037 **Container Id** 10264320 **Analysis Id** 0000095170

Container Type C drum, 83 Gallon **Analysis Status** Pass

RTR Date 24-FEB-2014 17:02 **Gross Weight** 271.215 Lbs. **Net Weight** 127.215 Lbs.

Equipment Z-213-101 **Waste Matrix Code** S5490 **IDC** RF-750 Pits 11 & 12 Debris

Recording Id 1RTR14-00022 **Procedure Id** INST-OI-12 **Revision** 52 **Approval Level** SPM

Is Test Pattern Resolution Ok? Yes **Start Side** A **Replicate** No **OIO** No

Audio Visual Ok? Yes **Operator** KKEARN

Result Comment Waste consists of plastic sheeting and bags
AK concurs with the recommended IDC, RF-750, for container 10264320. No AKR or NCR is necessary. CHD 2/27/14

Package

IDC Correct Yes **Recommended IDC** **Summary Category** S5000

Idc Change Reason

Rigid Liner Present? No **LinerType** NO LINER

Liner Punctured? N/A **Sharp Objects?** No

Liner Lid Present? No **Sharp Objects Are Protected?** Yes

Liner Lid Deformed? N/A **Layers Of Confinement** 3

Fill Factor 85

Bag Closure Method Twisted and Taped

Liquids

Liquid Present? No **Internal Container with Liquid** No

Internal Container with Liquid 0 pints **LA Candidate** No

Liquid Between Liner & Drum 0 pints **Containerized Liquid**

Total Liquid Amount 0 pints **Containerized Liquid Amt** 0 pints

Other Liquids 0 pints **Comment**

Prohibited Liquids Present No **Comment**

Contents-Drum or Box

	Value	Comment		Value	Comment
Lead?	No		**Mercury Present?**	No	
Wet Cell Batteries?	No		**Explosives?**	No	
Prohibited Compressed Gases?	No		**PCBs Present?**	No	
Aerosol Cans?	No		**PCB Mass (lbs)**	0	
Non-Mixed Hazardous Waste Present?	No		**Sealed Containers Over 4L?**	No	

Non-Radionuclide Pyrophoric Materials Present? No

Waste exhibiting the characteristics of Ignitability, Corrosivity or Reactivity Present? No

Wastes Incompatible with backfill, seal and panel closure materials, container and packaging materials,shipping container or other wastes? No

Impenetrable Dense Objects? No

Waste Material Items

Packaging Materials

Material Item	Quantity	Unit	Unit Wt(lbs)	Item Wt(lbs)
Drum plastic bag	2.000	EACH	1.000	2.000
55-GAL DRUM (17c)	1.000	EACH	59.000	59.000

Waste Items byWeight

Material Item	Quantity	Unit	Unit Wt(lbs)	Item Wt(lbs)
tools and scrap metal	1.000	EACH	13.000	13.000
Plastic bag for waste	1.000	EACH	0.250	0.250

Waste Items by Volume

Material Item	Quantity	Unit	Unit Wt(lbs)	Item Wt(lbs)
Oil-Dri (Inside 55 gal drum)	125.000	PINTS	0.420	52.500

Batch Id RTR14-00037 **Container Id** 10264320 **Analysis Id** 0000095170

Waste Parameters

Waste Parameter	Remaining Weight %	Actual Weight Lbs
Iron-based Metals/Alloys	0.000	13.000
Aluminum-based Metals/Alloys	0.000	0.000
Other metals	0.000	0.000
Other Inorganic Materials	0.000	52.500
Cellulosics	0.000	0.000
Rubber	0.000	0.000
Plastic (Waste Materials)	100.000	61.715
Inorganic matrix	0.000	0.000
Organic matrix	0.000	0.000
Soils/gravel	0.000	0.000
Steel (packaging materials)	0.000	142.000
Plastic (packaging materials)	0.000	2.000
Cellulosics Packaging	0.000	0.000

Analysis Esignature History

Esig Approval Id	User Id	Esignature Date	Comment
2705842	CHINKLE	27-FEB-2014 13:50	This batch is returned for rework. AK does not concur with the recommended IDC change for containers 10512448, 10512153, 10512142, 10512141, 10511993, 10333865, 10289408, 10288404. CHD 2/27/14
2703350	KKEARN	24-FEB-2014 17:02	

------End of RTR Analysis Report------

AMWTP

Advanced Mixed Waste Treatment Project

AMWTP

RTR Replicate Comparison Report

Date: 11-Sep-2014

Time: 08:01

RTR Batch Id: RTR14-00037 **Container Id:** 10510756 **Equipment Id:** Z-213-101

Container type Description: **85 Gallon Open Head drum, DOT 7A** Gen-IDC: **RF-003** Gross Weight(Lbs): **443.205**

	Original Analysis		Replicate Analysis	
Analysis Id / Date:	0000095149	24-FEB-2014 11:29	0000095155	24-FEB-2014 13:11
Procedure /Revision:	INST-OI-12	52	INST-OI-12	52
Recording Media Id:	1RTR14-00022		1RTR14-00022	
Starting Position:	A		A	
Is Test Pattern Resolution Ok?	Y		Y	
Audio Visual Ok?	Y		Y	
Personnel Name:	CRAIG SIMMONS		KENT KEARN	
IDC Ok? / Recommended IDC:	Y		Y	
IDC Change Reason:				
Summary Category / Waste matrix Code:	S3000	S3114	S3000	S3114
Packaging				
Rigid Liner Present?	N		N	
Liner Type Code:	NO LINER		NO LINER	
Liner Punctured:	NA		NA	
Liner Lid Deformed:	NA		NA	
Layers Of Confinement:	1		1	
Sharp Objects?	N		N	
Sharp Objects Protected?	Y		Y	
Fill Factor(%):	98		98	
Bag Closure Method:	Twisted and Taped		Twisted and Taped	
Liner Lid Present?:	N		N	
Liquids: (Volume in Pints)				
Liquid Present?	N		N	
Internal Container with Liquid?	0		0	
Containerized Liquid	N		N	
Other Liquids:	0		0	
Internal Container with Liquid Amt:	0		0	
Liquid Between Liner and Drum:	0		0	
Containerized Liquid:	0		0	
Total Liquid Amount:	0		0	
LA Candidate?	N		N	
Prohibited Liquids Present	N		N	

Contents:	Y/N	Comments	Y/N	Comments
Sealed Containers over 4L?	N		N	
Lead Present?	N		N	
Explosives Present?	N		N	
Mercury Present?	N		N	
Wet Cell Batteries Detected?	N		N	

RTR Replicate Comparison Report

Advanced Mixed Waste Treatment Project

RTR Batch Id: RTR14-00037 **Container Id: 10510756** **Equipment Id: Z-213-101**

	Original Analysis		Replicate Analysis	
Prohibited Compressed Gas Present?	N		N	
PCBs Present?	Y	PCB waste	Y	RF-003
PCB Mass (lbs)	303.21		303.21	
Non-Radionuclide Pyrophoric Materials Present?	N		N	
Waste exhibiting the characteristics of ignitability, Corrosivity or reactivity Present?	N		N	
Non-Mixed Hazardous Waste Present?	N		N	
Waste Incompatibles with backfill, Seal and panel closure materials, container and packaging material, shipping container or other wastes?	N		N	
Impenetrable Dense Objects?	N		N	
Result Comment:	The inner 55 gallon drum contains sludge. The 55 is in good condition. Rework: Corrected drum bag in packaging and layers of confinement. cj 03/20/14 Rework: Corrected PCB Mass lbs cjs 03/26/14		Waste consists of a sludge	

----------E-signature----------

Esig Approval ID	User ID	Signature Date	Comment
2716525	DLEE	13-MAR-14	Replicate Comparison completed.

-----End of RTR Replicate Comparison Report-----

DIVIDER

PAGE

AMWTP
Advanced Mixed Waste Treatment Project

AMWTP

Batch Report Coversheet

Date: 11-Sep-2014

Time: 08:14

Batch Type Real Time Radiography
Batch Report No. RTR14-00233
Batch Id RTR14-00233
Open Date 09-AUG-14 10:41:55
Close Date 10-AUG-14 14:20:57
Batch Status AP
Test Facility Idaho AMWTP
Equipment Id Z-213-101 RTR Station Left (213-101)

Container Id	IDC	Analysis Id	Date Examined	QC Type	Analysis Status	Operator
10291751	SD-177	0000100219	09-AUG-14 10:41:55	Original	P	DENISE LEE
10308059	SD-177	0000100221	09-AUG-14 10:56:06	Original	P	MARK SORENSON
10310323	SD-177	0000100223	09-AUG-14 11:22:10	Original	P	DANNY GREEN
10305211	SD-176	0000100224	09-AUG-14 11:38:49	Original	P	ROE THOMPSON
10345547	RF-745	0000100228	09-AUG-14 12:35:20	Original	P	ROE THOMPSON
10312166	SD-176	0000100229	09-AUG-14 12:54:10	Original	P	ROE THOMPSON
10308033	SD-177	0000100231	09-AUG-14 13:09:00	Original	P	ROE THOMPSON
10313854	SD-177	0000100233	09-AUG-14 13:26:57	Original	P	MARK SORENSON
10526844	RF-002	0000100235	09-AUG-14 14:17:01	Original	P	SAMUEL PHILLIPS
10526845	RF-001	0000100236	09-AUG-14 14:39:05	Original	P	SAMUEL PHILLIPS
10526846	RF-003	0000100241	09-AUG-14 16:24:52	Original	P	SAMUEL PHILLIPS
10291747	RF-750	0000100242	09-AUG-14 16:37:56	Original	P	MARK SORENSON
10526844	RF-002	0000100243	09-AUG-14 16:53:37	Replicate / Duplicate	P	KENT KEARN
10526846	RF-003	0000100245	09-AUG-14 17:04:37	RTR OIO	P	KENT KEARN
10308495	SD-177	0000100253	10-AUG-14 08:58:29	Original	P	MARK SORENSON
10342406	SD-176	0000100254	10-AUG-14 10:01:18	Original	P	ROE THOMPSON
10323336	SD-177	0000100256	10-AUG-14 10:27:52	Original	P	MARK SORENSON
10312438	SD-177	0000100257	10-AUG-14 10:49:20	Original	P	MARK SORENSON
10300329	RF-750	0000100259	10-AUG-14 11:51:20	Original	P	MARK SORENSON
10502423	RF-005	0000100261	10-AUG-14 12:28:40	Original	P	KENT KEARN
10308221	SD-177	0000100262	10-AUG-14 12:41:06	Original	P	MARK SORENSON
10308472	SD-177	0000100264	10-AUG-14 14:19:56	Original	P	MARK SORENSON

INFORMATION ONLY

**********Batch Comments**********

Written By	Date	Comment
NKIRK	12-AUG-14 13:16:07	12-AUG-14 NKIRK AKE This batch is returned for rework. AK does not concur with the recommended IDC change for containers: 10345547, 10342406, 10323336, 10313854, 10312438, 10312166, 10308495, 10308472, 10308221, 10308059, 10308033, 10305211, 10300329, 10291751 and 10291747. Ndk 8/12/14
MSORENSON	13-AUG-14 08:10:13	AK rework complete.
NKIRK	14-AUG-14 07:36:31	12-AUG-14 NKIRK AKE This batch is returned for rework. AK does not concur with the recommended IDC change for containers: 10345547, 10342406, 10323336, 10313854, 10312438, 10312166, 10308495, 10308472, 10308221, 10308059, 10308033, 10305211, 10300329, 10291751 and 10291747. Ndk 8/12/14 14-AUG-14 NKIRK AKE This batch is promoted. ndk 8/14/14
KHUGHES	16-AUG-14 16:54:10	Accepted for ITR validation
CSIMMONS	17-AUG-14 11:12:51	Accepted batch to validate from previous ITR.
CSIMMONS	17-AUG-14 11:12:51	This batch was validated to MP-TRUW-8.8.
CSIMMONS	17-AUG-14 17:33:52	Container 10308033: The Bag Closure Method should be corrected to "No Bags" No closure method was identified during the exam. Please review and make changes as needed.
CSIMMONS	17-AUG-14 17:33:52	Sent batch to operations for rework.
CSIMMONS	17-AUG-14 17:33:52	Container 10312166: Per AK request this containers' IDC was changed to SD-176, According to RPT-TRUW -05 "Visual examination of this bulk or direct loaded sludge packaged in 55-, 83-, or 85-gallon drums would not provide additional relevant information to the RTR examination. The Impenetrable dense objects question should be corrected to "No". Recommended closure of NCR 87908. Please review and make changes as needed.
CSIMMONS	17-AUG-14 17:33:52	Container 10345547: Per AK the waste in this container was determined to be RF-745 Pits 11 & 12 Evaporator Salts. The remaining waste weight % should be corrected to 100% Other Inorganic Materials. The Results Comment should be updated to reflect this waste. According to RPT-TRUW -05 "Visual examination of this bulk or direct loaded waste packaged in 55, 83, or 85-gallon drums would not provide additional relevant information to the RTR examination". The Impenetrable dense objects question should be corrected to "No". Please review and make changes as needed.
CSIMMONS	17-AUG-14 17:33:52	Container 10305211: Per AK request this containers' IDC was changed to SD-176, According to RPT-TRUW -05 "Visual examination of this bulk or direct loaded sludge packaged in 55-, 83-, or 85-gallon drums would not provide additional relevant information to the RTR examination. The Impenetrable dense objects question should be corrected to "No". Recommended closure of NCR 87901. Please review and make changes as needed.
CSIMMONS	17-AUG-14 17:33:52	Container 10342406: Per AK request this containers' IDC was changed to SD-176, According to RPT-TRUW -05 "Visual examination of this bulk or direct loaded sludge packaged in 55-, 83-, or 85-gallon drums would not provide additional relevant information to the RTR examination. The Impenetrable dense objects question should be corrected to "No". Recommended closure of NCR 87915. Please review and make changes as needed.
RBTHOMPSON	18-AUG-14 10:23:49	rework complete.
CSIMMONS	18-AUG-14 11:18:23	Sent batch to operations for additional rework.
CSIMMONS	18-AUG-14 11:18:23	Reviewed rework: Container 10345547 needs the results comment updated to show the remaining waste is salts. Please review and make changes as needed.
RBTHOMPSON	18-AUG-14 12:13:04	Rework complete.
CSIMMONS	18-AUG-14 13:26:49	Promoted batch to SPM level.
CSIMMONS	18-AUG-14 13:26:49	Reviewed rework: It appears to be complete and correct.
NSTYHL	19-AUG-14 11:58:40	Demote to ITR.
NSTYHL	19-AUG-14 11:58:40	Rework: Question #19 of the ITR checklist: the container number noted as the OIO appears to be incorrect. Please review and correct as appropriate.
NSTYHL	19-AUG-14 11:58:40	Rework: Container 10291751 - Lead Tape is identified in the Lead field but not added to the waste parameters. Please review and correct as appropriate.
CSIMMONS	19-AUG-14 12:51:43	Sent batch to operations for rework per SPM batch comment.
DLEE	19-AUG-14 13:14:43	Rework completed.
CSIMMONS	19-AUG-14 13:33:21	Reviewed rework: It appears to be complete and correct.
		Promoted batch to operations for rework.

CSIMMONS	19-AUG-14 13:33:21	
CSIMMONS	19-AUG-14 13:33:21	Corrected ITR checklist question # 19
NSTYHL	19-AUG-14 14:16:03	Approve batch.
NSTYHL	19-AUG-14 14:16:03	SPM review of rework complete.

**********Batch E-Signature History**********

Approval ID	User ID	Signature Date	Comment
2808390	MSORENSON	13-AUG-2014 08:10:13	AK rework complete.
2813139	CSIMMONS	17-AUG-2014 17:33:52	Sent batch to operations for rework.
2815098	RBTHOMPSON	18-AUG-2014 10:23:50	rework complete.
2815129	CSIMMONS	18-AUG-2014 11:18:23	Sent batch to operations for additional rework.
2815186	RBTHOMPSON	18-AUG-2014 12:13:04	Rework complete.
2815249	CSIMMONS	18-AUG-2014 13:26:49	Promoted batch to SPM level.
2815914	NSTYHL	19-AUG-2014 11:58:40	Demote to ITR.
2815961	CSIMMONS	19-AUG-2014 12:51:44	Sent batch to operations for rework per SPM batch comment.
2815985	DLEE	19-AUG-2014 13:14:43	Rework completed.
2815995	CSIMMONS	19-AUG-2014 13:33:21	Promoted batch to operations for rework.
2816036	NSTYHL	19-AUG-2014 14:16:03	Approve batch.

***** End of Batch Report Coversheet Report *****

AMWTP
Advanced Mixed Waste Treatment Project

AMWTP

Non-Conformance Report

Date: 11-Sep-2014

Time: 08:14

*****Batch NCR(s)*****

Batch Type	RTR	Batch ID	RTR14-00233		
Trackwise Number		**Status**		**Opened Date**	**Closed Date**

*****Container NCR(s)*****

Container ID *or related Batch ID*	Trackwise Number	Status	Opened Date	Closed Date
10300329	87917	OPEN	10-AUG-14	
10305211	87901	CLOSED	09-AUG-14	20-AUG-14
10308033	87909	OPEN	09-AUG-14	
10312166	87908	CLOSED	09-AUG-14	20-AUG-14
10312438	87916	OPEN	10-AUG-14	
10342406	87915	OPEN	10-AUG-14	
10345547	87907	CLOSED	09-AUG-14	20-AUG-14
10308059	87752	OPEN	31-JUL-14	
10310323	87752	OPEN	31-JUL-14	

*****End of Non-Conformance Report*****

AMWTP
Advanced Mixed Waste Treatment Project

AMWTP

Checklist Report

Date: 11-Sep-2014
Time: 08:15

Batch Id RTR14-00233 **Open Date** 09-AUG-14 **Close Date** 10-AUG-14

Reviewer CRAIG SIMMONS **Approval Level** Independent Technical Reviewer
Approval Date 17-AUG-14 **Review Iteration** 1

Question Text	Answer	Requirement	Comment
1. Is the Batch Data Report (BDR) and Quality Assurance (QA) documentation complete with the following: o Real-Time Radiography (RTR) Batch Coversheet o Table of Contents (manual review only) o RTR Analysis reports o Replicate Scan o Replicate Comparison o Independent Observation o ITR checklist (Form-1412, manual review only) o Form-1491, Batch Data Report Supplemental Comment Form (manual review only) o Associated NCRs (referenced in Waste Tracking System [WTS]) o Audio/Video Recording References?	Yes		
2. Are there 20 containers or less in the batch?	Yes		
3. Was the image quality indicator (IQI) satisfactory?	Yes		
4. Does every container in the batch reference an audio/video recording?	Yes		
5. Is there a completed radiography data analysis for each container in the batch?	Yes		
6. Was each RTR Operator qualified at the time of the radiography event?	Yes		
7. Was the data generated in a technically correct manner using the correct revision of INST-OI-12, Real-Time Radiography Operations (Drum)?	Yes		
8. Was the correct procedure and revision documented on all analysis reports?	Yes		
9. Has the E-signature History review been performed?	Yes		
10. Does the RTR operator confirm that the physical form matched the waste stream description and waste matrix code?	Yes		
11. Does the packaging weight plus the net weight equal the gross weight of the container in the estimated waste material parameters?	Yes		
12. Were all entries into the waste material items section assigned to the correct waste material parameters?	No		See batch comments.
13. Has the description of rigid liners and layers of confinement been properly documented, as applicable?	Yes		
14. Was the presence or absence of prohibited items properly documented?	Yes		
15. If prohibited items were identified, have appropriate nonconformance reports (NCRs) been generated?	Yes		
16. Were the containers examined between October and April in compliance with the preheat requirements?	N/A		Exam of this batch was performed in August.
17. Were all proper units and significant figures used for all reported volumes/weights?	Yes		
18. Was there a valid replicate scan performed (at least one container per day, or once per testing batch, whichever is less frequent)? o Record the container number, the replicate observation date in the comment section of this checklist. o Record any issues or concerns in the batch comment section.	Yes		The replicate scan was performed on container 10526844 on 09/09/14.
19. Was there a valid Operator Independent Observation (OIO) (not the replicate) performed (at least one container per day, or once per testing batch, whichever is less	Yes		The OIO scan was performed on container 10523144 on 09/09/14

Batch Id RTR14-00233 **Open Date** 09-AUG-14 **Close Date** 10-AUG-14

Reviewer CRAIG SIMMONS **Approval Level** Independent Technical Reviewer
Approval Date 17-AUG-14 **Review Iteration** 1

Question Text	Answer	Requirement	Comment
frequent)? o Record the container number and the OIO date in the comment section of this checklist. o Record any issues or concerns in the batch comment section.			
20. Were any significant differences identified that would affect the original disposition of the replicate and OIO, or affect data quality objectives (DQOs)? If so, ensure an NCR was generated and WTS flagged.	No		
21. Were the RTR quality assurance objectives (QAOs) met? o Precision o Accuracy o Completeness o Comparability	Yes		
22. Were any NCRs generated for containers containing prohibited items, or any non-conforming conditions that failed to meet DQOs or QAOs? o If so, include the NCRs, as appropriate, in the BDR.	Yes		
23. Were the rework requirements clearly identified in WTS or on the BDR?	Yes		See batch comments.

Batch Id RTR14-00233 **Open Date** 09-AUG-14 **Close Date** 10-AUG-14

Reviewer CRAIG SIMMONS **Approval Level** Independent Technical Reviewer
Approval Date 18-AUG-14 **Review Iteration** 2

Question Text	Answer	Requirement	Comment
1. Is the Batch Data Report (BDR) and Quality Assurance (QA) documentation complete with the following: o Real-Time Radiography (RTR) Batch Coversheet o Table of Contents (manual review only) o RTR Analysis reports o Replicate Scan o Replicate Comparison o Independent Observation o ITR checklist (Form-1412, manual review only) o Form-1491, Batch Data Report Supplemental Comment Form (manual review only) o Associated NCRs (referenced in Waste Tracking System [WTS]) o Audio/Video Recording References?	Yes		
2. Are there 20 containers or less in the batch?	Yes		
3. Was the image quality indicator (IQI) satisfactory?	Yes		
4. Does every container in the batch reference an audio/video recording?	Yes		
5. Is there a completed radiography data analysis for each container in the batch?	Yes		
6. Was each RTR Operator qualified at the time of the radiography event?	Yes		
7. Was the data generated in a technically correct manner using the correct revision of INST-OI-12, Real-Time Radiography Operations (Drum)?	Yes		
8. Was the correct procedure and revision documented on all analysis reports?	Yes		
9. Has the E-signature History review been performed?	Yes		
10. Does the RTR operator confirm that the physical form matched the waste stream description and waste matrix code?	Yes		
11. Does the packaging weight plus the net weight equal the gross weight of the container in the estimated waste material parameters?	Yes		
12. Were all entries into the waste material items section assigned to the correct waste material parameters?	No		See batch comments.
13. Has the description of rigid liners and layers of confinement been properly documented, as applicable?	Yes		
14. Was the presence or absence of prohibited items properly documented?	Yes		
15. If prohibited items were identified, have appropriate nonconformance reports (NCRs) been generated?	Yes		
16. Were the containers examined between October and April in compliance with the preheat requirements?	N/A		Exam of this batch was performed in August.
17. Were all proper units and significant figures used for all reported volumes/weights?	Yes		
18. Was there a valid replicate scan performed (at least one container per day, or once per testing batch, whichever is less frequent)? o Record the container number, the replicate observation date in the comment section of this checklist. o Record any issues or concerns in the batch comment section.	Yes		The replicate scan was performed on container 10526844 on 09/09/14.
19. Was there a valid Operator Independent Observation (OIO) (not the replicate) performed (at least one container per day, or once per testing batch, whichever is less	Yes		The OIO scan was performed on container 10523144 on 09/09/14

Batch Id RTR14-00233 **Open Date** 09-AUG-14 **Close Date** 10-AUG-14

Reviewer CRAIG SIMMONS **Approval Level** Independent Technical Reviewer
Approval Date 18-AUG-14 **Review Iteration** 2

Question Text	Answer	Requirement	Comment
frequent)? o Record the container number and the OIO date in the comment section of this checklist. o Record any issues or concerns in the batch comment section.			
20. Were any significant differences identified that would affect the original disposition of the replicate and OIO, or affect data quality objectives (DQOs)? If so, ensure an NCR was generated and WTS flagged.	No		
21. Were the RTR quality assurance objectives (QAOs) met? o Precision o Accuracy o Completeness o Comparability	Yes		
22. Were any NCRs generated for containers containing prohibited items, or any non-conforming conditions that failed to meet DQOs or QAOs? o If so, include the NCRs, as appropriate, in the BDR.	Yes		
23. Were the rework requirements clearly identified in WTS or on the BDR?	Yes		See batch comments.

Batch Id RTR14-00233 **Open Date** 09-AUG-14 **Close Date** 10-AUG-14

Reviewer CRAIG SIMMONS **Approval Level** Independent Technical Reviewer

Approval Date 18-AUG-14 **Review Iteration** 3

Question Text	Answer	Requirement	Comment
1. Is the Batch Data Report (BDR) and Quality Assurance (QA) documentation complete with the following: o Real-Time Radiography (RTR) Batch Coversheet o Table of Contents (manual review only) o RTR Analysis reports o Replicate Scan o Replicate Comparison o Independent Observation o ITR checklist (Form-1412, manual review only) o Form-1491, Batch Data Report Supplemental Comment Form (manual review only) o Associated NCRs (referenced in Waste Tracking System [WTS]) o Audio/Video Recording References?	Yes		
2. Are there 20 containers or less in the batch?	Yes		
3. Was the image quality indicator (IQI) satisfactory?	Yes		
4. Does every container in the batch reference an audio/video recording?	Yes		
5. Is there a completed radiography data analysis for each container in the batch?	Yes		
6. Was each RTR Operator qualified at the time of the radiography event?	Yes		
7. Was the data generated in a technically correct manner using the correct revision of INST-OI-12, Real-Time Radiography Operations (Drum)?	Yes		
8. Was the correct procedure and revision documented on all analysis reports?	Yes		
9. Has the E-signature History review been performed?	Yes		
10. Does the RTR operator confirm that the physical form matched the waste stream description and waste matrix code?	Yes		
11. Does the packaging weight plus the net weight equal the gross weight of the container in the estimated waste material parameters?	Yes		
12. Were all entries into the waste material items section assigned to the correct waste material parameters?	Yes		
13. Has the description of rigid liners and layers of confinement been properly documented, as applicable?	Yes		
14. Was the presence or absence of prohibited items properly documented?	Yes		
15. If prohibited items were identified, have appropriate nonconformance reports (NCRs) been generated?	Yes		
16. Were the containers examined between October and April in compliance with the preheat requirements?	N/A		Exam of this batch was performed in August.
17. Were all proper units and significant figures used for all reported volumes/weights?	Yes		
18. Was there a valid replicate scan performed (at least one container per day, or once per testing batch, whichever is less frequent)? o Record the container number, the replicate observation date in the comment section of this checklist. o Record any issues or concerns in the batch comment section.	Yes		The replicate scan was performed on container 10526844 on 09/09/14.
19. Was there a valid Operator Independent Observation (OIO) (not the replicate) performed (at least one container per day, or once per testing batch, whichever is less	Yes		The OIO scan was performed on container 10523144 on 09/09/14

Batch Id RTR14-00233 **Open Date** 09-AUG-14 **Close Date** 10-AUG-14

Reviewer CRAIG SIMMONS **Approval Level** Independent Technical Reviewer
Approval Date 18-AUG-14 **Review Iteration** 3

Question Text	Answer	Requirement	Comment
frequent)? o Record the container number and the OIO date in the comment section of this checklist. o Record any issues or concerns in the batch comment section.			
20. Were any significant differences identified that would affect the original disposition of the replicate and OIO, or affect data quality objectives (DQOs)? If so, ensure an NCR was generated and WTS flagged.	No		
21. Were the RTR quality assurance objectives (QAOs) met? o Precision o Accuracy o Completeness o Comparability	Yes		
22. Were any NCRs generated for containers containing prohibited items, or any non-conforming conditions that failed to meet DQOs or QAOs? o If so, include the NCRs, as appropriate, in the BDR.	Yes		
23. Were the rework requirements clearly identified in WTS or on the BDR?	Yes		See batch comments.

Batch Id RTR14-00233 **Open Date** 09-AUG-14 **Close Date** 10-AUG-14

Reviewer CRAIG SIMMONS **Approval Level** Independent Technical Reviewer

Approval Date 19-AUG-14 **Review Iteration** 4

Question Text	Answer	Requirement	Comment
1. Is the Batch Data Report (BDR) and Quality Assurance (QA) documentation complete with the following: o Real-Time Radiography (RTR) Batch Coversheet o Table of Contents (manual review only) o RTR Analysis reports o Replicate Scan o Replicate Comparison o Independent Observation o ITR checklist (Form-1412, manual review only) o Form-1491, Batch Data Report Supplemental Comment Form (manual review only) o Associated NCRs (referenced in Waste Tracking System [WTS]) o Audio/Video Recording References?	Yes		
2. Are there 20 containers or less in the batch?	Yes		
3. Was the image quality indicator (IQI) satisfactory?	Yes		
4. Does every container in the batch reference an audio/video recording?	Yes		
5. Is there a completed radiography data analysis for each container in the batch?	Yes		
6. Was each RTR Operator qualified at the time of the radiography event?	Yes		
7. Was the data generated in a technically correct manner using the correct revision of INST-OI-12, Real-Time Radiography Operations (Drum)?	Yes		
8. Was the correct procedure and revision documented on all analysis reports?	Yes		
9. Has the E-signature History review been performed?	Yes		
10. Does the RTR operator confirm that the physical form matched the waste stream description and waste matrix code?	Yes		
11. Does the packaging weight plus the net weight equal the gross weight of the container in the estimated waste material parameters?	Yes		
12. Were all entries into the waste material items section assigned to the correct waste material parameters?	Yes		
13. Has the description of rigid liners and layers of confinement been properly documented, as applicable?	Yes		
14. Was the presence or absence of prohibited items properly documented?	Yes		
15. If prohibited items were identified, have appropriate nonconformance reports (NCRs) been generated?	Yes		
16. Were the containers examined between October and April in compliance with the preheat requirements?	N/A		Exam of this batch was performed in August.
17. Were all proper units and significant figures used for all reported volumes/weights?	Yes		
18. Was there a valid replicate scan performed (at least one container per day, or once per testing batch, whichever is less frequent)? o Record the container number, the replicate observation date in the comment section of this checklist. o Record any issues or concerns in the batch comment section.	Yes		The replicate scan was performed on container 10526844 on 09/09/14.
19. Was there a valid Operator Independent Observation (OIO) (not the replicate) performed (at least one container per day, or once per testing batch, whichever is less	Yes		The OIO scan was performed on container 10526846 on 09/09/14

Batch Id RTR14-00233 **Open Date** 09-AUG-14 **Close Date** 10-AUG-14

Reviewer CRAIG SIMMONS **Approval Level** Independent Technical Reviewer
Approval Date 19-AUG-14 **Review Iteration** 4

Question Text	Answer	Requirement	Comment
frequent)? o Record the container number and the OIO date in the comment section of this checklist. o Record any issues or concerns in the batch comment section.			
20. Were any significant differences identified that would affect the original disposition of the replicate and OIO, or affect data quality objectives (DQOs)? If so, ensure an NCR was generated and WTS flagged.	No		
21. Were the RTR quality assurance objectives (QAOs) met? o Precision o Accuracy o Completeness o Comparability	Yes		
22. Were any NCRs generated for containers containing prohibited items, or any non-conforming conditions that failed to meet DQOs or QAOs? o If so, include the NCRs, as appropriate, in the BDR.	Yes		
23. Were the rework requirements clearly identified in WTS or on the BDR?	Yes		See batch comments.

Batch Id RTR14-00233 **Open Date** 09-AUG-14 **Close Date** 10-AUG-14

Reviewer CRAIG SIMMONS **Approval Level** Independent Technical Reviewer

Approval Date 19-AUG-14 **Review Iteration** 5

Question Text	Answer	Requirement	Comment
1. Is the Batch Data Report (BDR) and Quality Assurance (QA) documentation complete with the following: o Real-Time Radiography (RTR) Batch Coversheet o Table of Contents (manual review only) o RTR Analysis reports o Replicate Scan o Replicate Comparison o Independent Observation o ITR checklist (Form-1412, manual review only) o Form-1491, Batch Data Report Supplemental Comment Form (manual review only) o Associated NCRs (referenced in Waste Tracking System [WTS]) o Audio/Video Recording References?	Yes		
2. Are there 20 containers or less in the batch?	Yes		
3. Was the image quality indicator (IQI) satisfactory?	Yes		
4. Does every container in the batch reference an audio/video recording?	Yes		
5. Is there a completed radiography data analysis for each container in the batch?	Yes		
6. Was each RTR Operator qualified at the time of the radiography event?	Yes		
7. Was the data generated in a technically correct manner using the correct revision of INST-OI-12, Real-Time Radiography Operations (Drum)?	Yes		
8. Was the correct procedure and revision documented on all analysis reports?	Yes		
9. Has the E-signature History review been performed?	Yes		
10. Does the RTR operator confirm that the physical form matched the waste stream description and waste matrix code?	Yes		
11. Does the packaging weight plus the net weight equal the gross weight of the container in the estimated waste material parameters?	Yes		
12. Were all entries into the waste material items section assigned to the correct waste material parameters?	Yes		
13. Has the description of rigid liners and layers of confinement been properly documented, as applicable?	Yes		
14. Was the presence or absence of prohibited items properly documented?	Yes		
15. If prohibited items were identified, have appropriate nonconformance reports (NCRs) been generated?	Yes		
16. Were the containers examined between October and April in compliance with the preheat requirements?	N/A		Exam of this batch was performed in August.
17. Were all proper units and significant figures used for all reported volumes/weights?	Yes		
18. Was there a valid replicate scan performed (at least one container per day, or once per testing batch, whichever is less frequent)? o Record the container number, the replicate observation date in the comment section of this checklist. o Record any issues or concerns in the batch comment section.	Yes		The replicate scan was performed on container 10526844 on 09/09/14.
19. Was there a valid Operator Independent Observation (OIO) (not the replicate) performed (at least one container per day, or once per testing batch, whichever is less	Yes		The OIO scan was performed on container 10526846 on 09/09/14

Batch Id RTR14-00233 **Open Date** 09-AUG-14 **Close Date** 10-AUG-14

Reviewer CRAIG SIMMONS **Approval Level** Independent Technical Reviewer

Approval Date 19-AUG-14 **Review Iteration** 5

Question Text	Answer	Requirement	Comment
frequent)? o Record the container number and the OIO date in the comment section of this checklist. o Record any issues or concerns in the batch comment section.			
20. Were any significant differences identified that would affect the original disposition of the replicate and OIO, or affect data quality objectives (DQOs)? If so, ensure an NCR was generated and WTS flagged.	No		
21. Were the RTR quality assurance objectives (QAOs) met? o Precision o Accuracy o Completeness o Comparability	Yes		
22. Were any NCRs generated for containers containing prohibited items, or any non-conforming conditions that failed to meet DQOs or QAOs? o If so, include the NCRs, as appropriate, in the BDR.	Yes		
23. Were the rework requirements clearly identified in WTS or on the BDR?	Yes		See batch comments.

Batch Id RTR14-00233 **Open Date** 09-AUG-14 **Close Date** 10-AUG-14

Reviewer NICK STYHL **Approval Level** SPM Data Validation

Approval Date 19-AUG-14 **Review Iteration** 1

Question Text	Answer	Requirement	Comment
(1) Has the batch received a Data Generation Level Independent Technical Review?	Yes	MP-TRUW-8.2, C3-10b(1)	
(2) Is the Independent Technical Review checklist complete?	Yes	MP-TRUW-8.2, C3-10b(1)	
(3) When identified, were polychlorinated biphenyls (PCBs), mercury, lead, or other hazardous contaminants consistent with the waste stream acceptable knowledge (AK) Summary Report(s) and/or AK documentation?	Yes	MP-TRUW-8.2, C4-3	
(4) Are any ignitable, corrosive, or reactive wastes identified in this waste?	No	MP-TRUW-8.2, C4-3	
(5) Are the packaging configurations identified on the real-time radiography (RTR) consistent with the waste stream AK Summary Report(s) and/or AK documentation?	Yes	MP-TRUW-8.2, C4-3	
(6) Do the containers in this batch contain typical waste items consistent with waste stream AK Summary Report(s) and/or AK documentation?	Yes	MP-TRUW-8.2, C4-3	
(7) Are the Waste Matrix Codes (WMCs) and physical form descriptions consistent with AK?	Yes	MP-TRUW-8.2, C4-3	
(8) Have all AK discrepancies been resolved and have all AK Resolution checklists been approved? Reference all waste stream AK documentation used in review of this data package.	Yes	MP-TRUW-8.2, C4-3	MP-TRUW-05, MP-TRUW-06, MP-TRUW-12
(9) Have all applicable Quality Assurance Objectives (QAOs) been met, including precision, accuracy, completeness, and comparability, by using the appropriate acceptance criteria for each as specified in MP-TRUW-8.2, Quality Assurance Project Plan Section C3-4? Precision ¿ Verified prior to use by tuning precisely enough to demonstrate compliance with QAOs through viewing an image test pattern, as evidenced by a satisfactory Image Quality Indicator (IQI). ¿ Have discrepancies, if any, between radiography operators been reconciled? Accuracy ¿ Use of a target to tune the image for maximum sharpness as evidenced by a satisfactory IQI and by requiring operators to successfully identify 100% of the required items in a training container during initial and subsequent qualifications. Completeness ¿ An audio/videotape (or equivalent media) of the radiography examination and a validated radiography data form will be obtained for 100% of the retrievably stored waste container in the program for all waste containers subject to radiography. Comparability ¿ Use of standardized radiography procedures and operator qualifications.	Yes	MP-TRUW-8.2, C3-4a	
(10) Do the waste container contents match the WMC, waste stream description and identify the absence of prohibited items?	Yes	MP-TRUW-8.2, C1-3 and B3-11	
(11) If residual liquids exist in the container, is an estimate of quantity given?	Yes	MP-TRUW-8.2, C1-3	
(12) Do the individual container reports contain the (a) IDC, (b) Waste Matrix Code, (c) audio/video recording reference, (d) gross container weight, (e) waste material parameter weights, and (f) signature and date of examination?	Yes	MP-TRUW-8.2, C1-3 and C3-11a	
(13) Have the IDC, WMC, and/or waste stream for all	No	MP-TRUW-8.2, C1-3 and	

Batch Id RTR14-00233 **Open Date** 09-AUG-14 **Close Date** 10-AUG-14

Reviewer NICK STYHL **Approval Level** SPM Data Validation

Approval Date 19-AUG-14 **Review Iteration** 1

Question Text	Answer	Requirement	Comment
containers in the batch remained the same as originally assigned by the historical designation? If not, note the container number in the comment field and notify the Acceptable Knowledge Expert (AKE) if NCR does not exist on the WMC and IDC change.		C3-4a	
(14) Was a replicate scan performed by an independent operator on at least one container per day or once per testing batch, whichever is less frequent, by a qualified radiography operator that was not involved in the original scan of the waste container?	Yes	MP-TRUW-8.2, B1-3, C3-4a, and C3-10b(1)	
(15) Has an independent observation of one scan (not the replicate) been performed by a qualified operator that was not involved in the original scan of the waste container, at a rate of once per day or once per batch, whichever is less frequent? Record date of observation and any issues or concerns in the comment section.	Yes	MP-TRUW-8.2, C1-3 and C3-4a	Container 10526846 was examined on 09-Aug-14. No issues identified.
(16) Did personnel having current qualifications perform all RTR examinations?	Yes	MP-TRUW-8.1, Appendix F	
(17) Verify the correct procedure and revision number were used for all containers in this batch.	Yes	MP-TRUW-8.2, C3-4a	
(18) Verify the audio and video checks were performed and are satisfactory.	Yes	MP-TRUW-8.2, C3-4a	
(19) Verify that there are 20 or fewer containers in the batch.	Yes	MP-TRUW-8.2, C1-3	
(20) Does the data for all containers within this batch meet the review, validation, and verification requirements? · Are proper units (e.g. Liters or pounds) and significant figure used? · Is the BDR complete (all pages identified in the BDR and numbered accordingly)? - RTR Batch Coversheet - Table of Contents (manual review only) - RTR Analysis reports - Replicate Scan - Replicate Comparison - Independent Observation - Form-1412, ITR checklist - Associated NCRs - Form, 1491, Batch Data Report Supplemental Comment Form, as applicable - Audio/Video Recording References	No	MP-TRUW-8.2, C3 10b(2)	See batch comments.
(21) Review all NCR(s) (open and closed). Can the batch be approved?	Yes	MP-TRUW-8.2, C3-13	
(22) Is all data associated with this BDR acceptable for signature release?	No	MP-TRUW-8.2, C3 10b(2)	See batch comments.

Batch Id RTR14-00233 **Open Date** 09-AUG-14 **Close Date** 10-AUG-14

Reviewer NICK STYHL **Approval Level** SPM Data Validation
Approval Date 19-AUG-14 **Review Iteration** 2

Question Text	Answer	Requirement	Comment
(1) Has the batch received a Data Generation Level Independent Technical Review?	Yes	MP-TRUW-8.2, C3-10b(1)	
(2) Is the Independent Technical Review checklist complete?	Yes	MP-TRUW-8.2, C3-10b(1)	
(3) When identified, were polychlorinated biphenyls (PCBs), mercury, lead, or other hazardous contaminants consistent with the waste stream acceptable knowledge (AK) Summary Report(s) and/or AK documentation?	Yes	MP-TRUW-8.2, C4-3	
(4) Are any ignitable, corrosive, or reactive wastes identified in this waste?	No	MP-TRUW-8.2, C4-3	
(5) Are the packaging configurations identified on the real-time radiography (RTR) consistent with the waste stream AK Summary Report(s) and/or AK documentation?	Yes	MP-TRUW-8.2, C4-3	
(6) Do the containers in this batch contain typical waste items consistent with waste stream AK Summary Report(s) and/or AK documentation?	Yes	MP-TRUW-8.2, C4-3	
(7) Are the Waste Matrix Codes (WMCs) and physical form descriptions consistent with AK?	Yes	MP-TRUW-8.2, C4-3	
(8) Have all AK discrepancies been resolved and have all AK Resolution checklists been approved? Reference all waste stream AK documentation used in review of this data package.	Yes	MP-TRUW-8.2, C4-3	MP-TRUW-05, MP-TRUW-06, MP-TRUW-12
(9) Have all applicable Quality Assurance Objectives (QAOs) been met, including precision, accuracy, completeness, and comparability, by using the appropriate acceptance criteria for each as specified in MP-TRUW-8.2, Quality Assurance Project Plan Section C3-4? Precision ¿ Verified prior to use by tuning precisely enough to demonstrate compliance with QAOs through viewing an image test pattern, as evidenced by a satisfactory Image Quality Indicator (IQI). ¿ Have discrepancies, if any, between radiography operators been reconciled? Accuracy ¿ Use of a target to tune the image for maximum sharpness as evidenced by a satisfactory IQI and by requiring operators to successfully identify 100% of the required items in a training container during initial and subsequent qualifications. Completeness ¿ An audio/videotape (or equivalent media) of the radiography examination and a validated radiography data form will be obtained for 100% of the retrievably stored waste container in the program for all waste containers subject to radiography. Comparability ¿ Use of standardized radiography procedures and operator qualifications.	Yes	MP-TRUW-8.2, C3-4a	
(10) Do the waste container contents match the WMC, waste stream description and identify the absence of prohibited items?	Yes	MP-TRUW-8.2, C1-3 and B3-11	
(11) If residual liquids exist in the container, is an estimate of quantity given?	Yes	MP-TRUW-8.2, C1-3	
(12) Do the individual container reports contain the (a) IDC, (b) Waste Matrix Code, (c) audio/video recording reference, (d) gross container weight, (e) waste material parameter weights, and (f) signature and date of examination?	Yes	MP-TRUW-8.2, C1-3 and C3-11a	
(13) Have the IDC, WMC, and/or waste stream for all	No	MP-TRUW-8.2, C1-3 and	All containers, with the exception of 10526844,

Batch Id RTR14-00233 **Open Date** 09-AUG-14 **Close Date** 10-AUG-14

Reviewer NICK STYHL **Approval Level** SPM Data Validation
Approval Date 19-AUG-14 **Review Iteration** 2

Question Text	Answer	Requirement	Comment
containers in the batch remained the same as originally assigned by the historical designation? If not, note the container number in the comment field and notify the Acceptable Knowledge Expert (AKE) if NCR does not exist on the WMC and IDC change.		C3-4a	10526845, 10526846 and 10502423, have had IDC changes performed.
(14) Was a replicate scan performed by an independent operator on at least one container per day or once per testing batch, whichever is less frequent, by a qualified radiography operator that was not involved in the original scan of the waste container?	Yes	MP-TRUW-8.2, B1-3, C3-4a, and C3-10b(1)	
(15) Has an independent observation of one scan (not the replicate) been performed by a qualified operator that was not involved in the original scan of the waste container, at a rate of once per day or once per batch, whichever is less frequent? Record date of observation and any issues or concerns in the comment section.	Yes	MP-TRUW-8.2, C1-3 and C3-4a	Container 10526846 was examined on 09-Aug-14. No issues identified.
(16) Did personnel having current qualifications perform all RTR examinations?	Yes	MP-TRUW-8.1, Appendix F	
(17) Verify the correct procedure and revision number were used for all containers in this batch.	Yes	MP-TRUW-8.2, C3-4a	
(18) Verify the audio and video checks were performed and are satisfactory.	Yes	MP-TRUW-8.2, C3-4a	
(19) Verify that there are 20 or fewer containers in the batch.	Yes	MP-TRUW-8.2, C1-3	
(20) Does the data for all containers within this batch meet the review, validation, and verification requirements? · Are proper units (e.g. Liters or pounds) and significant figure used? · Is the BDR complete (all pages identified in the BDR and numbered accordingly)? - RTR Batch Coversheet - Table of Contents (manual review only) - RTR Analysis reports - Replicate Scan - Replicate Comparison - Independent Observation - Form-1412, ITR checklist - Associated NCRs - Form, 1491, Batch Data Report Supplemental Comment Form, as applicable - Audio/Video Recording References	Yes	MP-TRUW-8.2, C3 10b(2)	
(21) Review all NCR(s) (open and closed). Can the batch be approved?	Yes	MP-TRUW-8.2, C3-13	
(22) Is all data associated with this BDR acceptable for signature release?	Yes	MP-TRUW-8.2, C3 10b(2)	

Batch Id RTR14-00233 **Open Date** 09-AUG-14 **Close Date** 10-AUG-14

Esignature History

Esig Approval ID	User ID	Esig Date	Approval Level	Comments
2816036	NSTYHL	19-AUG-14	SPM	Approve batch.
2815995	CSIMMONS	19-AUG-14	ITR	Promoted batch to operations for rework.
2815961	CSIMMONS	19-AUG-14	ITR	Sent batch to operations for rework per SPM batch comment.
2815914	NSTYHL	19-AUG-14	SPM	Demote to ITR.
2815249	CSIMMONS	18-AUG-14	ITR	Promoted batch to SPM level.
2815129	CSIMMONS	18-AUG-14	ITR	Sent batch to operations for additional rework.
2813139	CSIMMONS	17-AUG-14	ITR	Sent batch to operations for rework.

AMWTP
Advanced Mixed Waste Treatment Project

AMWTP

RTR Analysis Report

Date: 11-Sep-2014
Time: 08:16

Batch Id RTR14-00233 **Container Id** 10291751 **Analysis Id** 0000100219

Container Type C drum, 83 Gallon **Analysis Status** Pass

RTR Date 09-AUG-2014 10:41 **Gross Weight** 266.805 **Lbs.** **Net Weight** 122.805 **Lbs.**

Equipment Z-213-101 **Waste Matrix Code** S5490 **IDC** SD-177 Pre-1980 INL-Exhumed SDA Heterogeneous Debris

Recording Id 1RTR14-00142 **Procedure Id** INST-OI-12 **Revision**

Is Test Pattern Resolution Ok? Yes **Start Side** A **Replicate** 54 **Approval Level** SPM

Audio Visual Ok? Yes **Operator** No **OIO** No

DGREEN

Result Comment

Waste consists of metal framework, a roller conveyor, equpment, & an electric saw.
AK does not concur with recommended IDC UN-00B but instead recommends IDC SD-177 for container 10291751 based on waste description and retrieval location. Ndk 8/12/14
Rework: Recommended an IDC of SD-177 per AK result comment. MS 08/13/2014
AK concurs with recommended IDC SD-177 for container 10291751. No NCR or AKR is required. Ndk 8/14/14
Rework to correct the waste parameters. DKL 8/19/14

Package

IDC Correct Yes **Recommended IDC** SD-177 **Summary Category** S5000

Idc Change Reason Per AK

Rigid Liner Present? No **LinerType** NO LINER

Liner Punctured? N/A **Sharp Objects?** Yes

Liner Lid Present? No **Sharp Objects Are Protected?** No

Liner Lid Deformed? N/A **Layers Of Confinement** 3

Fill Factor 90

Bag Closure Method Twisted and Taped

Liquids

Liquid Present? No **Internal Container with Liquid** No

Internal Container with Liquid 0 pints **LA Candidate** No

Liquid Between Liner & Drum 0 pints **Containerized Liquid**

Containerized Liquid Amt 0 pints

Total Liquid Amount 0 pints

Other Liquids 0 pints **Comment**

Prohibited Liquids Present No **Comment**

Contents-Drum or Box

	Value	Comment		Value	Comment
Lead?	Yes, Acceptable	tape	**Mercury Present?**	No	
Wet Cell Batteries?	No		**Explosives?**	No	
Prohibited Compressed Gases?	No		**PCBs Present?**	No	
Aerosol Cans?	No		**PCB Mass (lbs)**	0	
Non-Mixed Hazardous Waste Present?	No		**Sealed Containers Over 4L?**	No	

Non-Radionuclide Pyrophoric Materials Present? No

Waste exhibiting the characteristics of Ignitability, Corrosivity or Reactivity Present? No

Wastes Incompatible with backfill, seal and panel closure materials, container and packaging materials,shipping container or other wastes? No

Impenetrable Dense Objects? No

Waste Material Items

Packaging Materials

Material Item	Quantity	Unit	Unit Wt(lbs)	Item Wt(lbs)
Drum plastic bag	2.000	EACH	1.000	2.000
55-GAL DRUM (17c)	1.000	EACH	59.000	59.000

Waste Items byWeight

Material Item	Quantity	Unit	Unit Wt(lbs)	Item Wt(lbs)
Lead Tape	1.000	EACH	0.050	0.050
plastic waste	1.000	EACH	25.000	25.000
Plastic bag for waste	1.000	EACH	0.250	0.250

Batch Id RTR14-00233 **Container Id** 10291751 **Analysis Id** 0000100219

Waste Items by Volume

Material Item	Quantity	Unit	Unit Wt(lbs)	Item Wt(lbs)
Oil-Dri (Inside 55 gal drum)	6.000	PINTS	0.420	2.520

Waste Parameters

Waste Parameter	Remaining Weight %	Actual Weight Lbs
Iron-based Metals/Alloys	100.000	94.985
Aluminum-based Metals/Alloys	0.000	0.000
Other metals	0.000	0.050
Other Inorganic Materials	0.000	2.520
Cellulosics	0.000	0.000
Rubber	0.000	0.000
Plastic (Waste Materials)	0.000	25.250
Inorganic matrix	0.000	0.000
Organic matrix	0.000	0.000
Soils/gravel	0.000	0.000
Steel (packaging materials)	0.000	142.000
Plastic (packaging materials)	0.000	2.000
Cellulosics Packaging	0.000	0.000
MLLW Waste	0.000	0.000

Analysis Esignature History

Esig Approval Id	User Id	Esignature Date	Comment
2815984	DLEE	19-AUG-2014 13:14	Rework
2809173	NKIRK	14-AUG-2014 07:36	This batch is promoted. ndk 8/14/14
2808360	MSORENSON	13-AUG-2014 07:55	rework
2807919	NKIRK	12-AUG-2014 13:16	This batch is returned for rework. AK does not concur with the recommended IDC change for containers: 10345547, 10342406, 10323336, 10313854, 10312438, 10312166, 10308495, 10308472, 10308221, 10308059, 10308033, 10305211, 10300329, 10291751 and 10291747. Ndk 8/12/14
2806053	DGREEN	09-AUG-2014 10:41	

Batch Id RTR14-00233 **Container Id** 10308059 **Analysis Id** 0000100221

Container Type C drum, 83 Gallon **Analysis Status** Pass

RTR Date 09-AUG-2014 10:56 **Gross Weight** 275.625 **Lbs.** **Net Weight** 133.625 **Lbs**

Equipment Z-213-101 **Waste Matrix Code** S5490 **IDC** SD-177 Pre-1980 INL-Exhumed SDA Heterogeneous Debris

Recording Id 1RTR14-00142 **Procedure Id** INST-OI-12 **Revision**

Is Test Pattern Resolution Ok? Yes **Start Side** A **Replicate** 54 **Approval Level** SPM

Audio Visual Ok? Yes **Operator** No **OIO** No

DGREEN

Result Comment

Waste consists of plastic sheeting.
AK does not concur with recommended IDC UN-00B but instead recommends IDC SD-177 for container 10308059 based on waste description and retrieval location. Ndk 8/12/14
Rework: Recommended an IDC of SD-177 per AK result comment. MS 08/13/2014
AK concurs with recommended IDC SD-177 for container 10308059. No NCR or AKR is required. Ndk 8/14/14

Package

IDC Correct Yes **Recommended IDC** SD-177 **Summary Category** S5000

Idc Change Reason Per AK

Rigid Liner Present? No **LinerType** NO LINER

Liner Punctured? N/A **Sharp Objects?** No

Liner Lid Present? No **Sharp Objects Are Protected?** Yes

Liner Lid Deformed? N/A **Layers Of Confinement** 0

Fill Factor 83

Bag Closure Method No Bags

Liquids

Liquid Present? Yes **Internal Container with Liquid** No

Internal Container with Liquid 0 pints **LA Candidate** No

Liquid Between Liner & Drum 0 pints **Containerized Liquid**

Total Liquid Amount .09 pints **Containerized Liquid Amt** 0 pints

Other Liquids .09 pints **Comment** in bagging

Prohibited Liquids Present No **Comment**

Contents-Drum or Box

	Value	Comment		Value	Comment
Lead?	No		**Mercury Present?**	No	
Wet Cell Batteries?	No		**Explosives?**	No	
Prohibited Compressed Gases?	No		**PCBs Present?**	No	
Aerosol Cans?	No		**PCB Mass (lbs)**	0	
Non-Mixed Hazardous Waste Present?	No		**Sealed Containers Over 4L?**	No	

Non-Radionuclide Pyrophoric Materials Present? No

Waste exhibiting the characteristics of Ignitability, Corrosivity or Reactivity Present? No

Wastes Incompatible with backfill, seal and panel closure materials, container and packaging materials,shipping container or other wastes? No

Impenetrable Dense Objects? No

Waste Material Items

Packaging Materials

Material Item	Quantity	Unit	Unit Wt(lbs)	Item Wt(lbs)
55-GAL DRUM (17c)	1.000	EACH	59.000	59.000

Waste Items byWeight

Material Item	Quantity	Unit	Unit Wt(lbs)	Item Wt(lbs)

Waste Items by Volume

Material Item	Quantity	Unit	Unit Wt(lbs)	Item Wt(lbs)
Liquids for Other Inorganics	0.090	PINTS	1.000	0.090

Batch Id RTR14-00233 **Container Id** 10308059 **Analysis Id** 0000100221

Waste Parameters

Waste Parameter	Remaining Weight %	Actual Weight Lbs
Iron-based Metals/Alloys	0.000	0.000
Aluminum-based Metals/Alloys	0.000	0.000
Other metals	0.000	0.000
Other Inorganic Materials	0.000	0.090
Cellulosics	0.000	0.000
Rubber	0.000	0.000
Plastic (Waste Materials)	100.000	133.535
Inorganic matrix	0.000	0.000
Organic matrix	0.000	0.000
Soils/gravel	0.000	0.000
Steel (packaging materials)	0.000	142.000
Plastic (packaging materials)	0.000	0.000
Cellulosics Packaging	0.000	0.000
MLLW Waste	0.000	0.000

Analysis Esignature History

Esig Approval Id	User Id	Esignature Date	Comment
2809169	NKIRK	14-AUG-2014 07:36	This batch is promoted. ndk 8/14/14
2808366	MSORENSON	13-AUG-2014 08:00	rework
2807915	NKIRK	12-AUG-2014 13:16	This batch is returned for rework. AK does not concur with the recommended IDC change for containers: 10345547, 10342406, 10323336, 10313854, 10312438, 10312166, 10308495, 10308472, 10308221, 10308059, 10308033, 10305211, 10300329, 10291751 and 10291747. Ndk 8/12/14
2806055	DGREEN	09-AUG-2014 10:56	

Batch Id RTR14-00233 **Container Id** 10310323 **Analysis Id** 0000100223

Container Type C drum, 83 Gallon **Analysis Status** Pass

RTR Date 09-AUG-2014 11:22 **Gross Weight** 227.115 Lbs. **Net Weight** 84.115 Lbs

Equipment Z-213-101 **Waste Matrix Code** S5490 **IDC** SD-177 Pre-1980 INL-Exhumed SDA Heterogeneous Debris

Recording Id 1RTR14-00142 **Procedure Id** INST-OI-12 **Revision** 54

Is Test Pattern Resolution Ok? Yes **Start Side** A **Replicate** No **Approval Level** SPM

Audio Visual Ok? Yes **Operator** DGREEN **OIO** No

Result Comment

Waste appears to consist, by volume, of 60% glass- bottles & plate glass, & 40% plastic- bottles, bags, & plexi-glass.
AK concurs with recommended IDC SD-177 for container 10310323 based on waste description and retrieval location. Ndk 8/12/14

Package

IDC Correct Yes **Recommended IDC** SD-177 **Summary Category** S5000

Idc Change Reason Waste consists of debris.

Rigid Liner Present? No **LinerType** NO LINER

Liner Punctured? N/A **Sharp Objects?** No

Liner Lid Present? No **Sharp Objects Are Protected?** Yes

Liner Lid Deformed? N/A **Layers Of Confinement** 2

Fill Factor 100

Bag Closure Method Twisted and Taped

Liquids

Liquid Present? Yes **Internal Container with Liquid** Yes

Internal Container with Liquid .09 pints **LA Candidate** No

Liquid Between Liner & Drum 0 pints **Containerized Liquid**

Total Liquid Amount .09 pints **Containerized Liquid Amt** 0 pints

Other Liquids 0 pints **Comment** In a glass bottle.

Prohibited Liquids Present No **Comment**

Contents-Drum or Box

	Value	Comment		Value	Comment
Lead?	Yes, Acceptable	leaded gloves	**Mercury Present?**	No	
Wet Cell Batteries?	No		**Explosives?**	No	
Prohibited Compressed Gases?	No		**PCBs Present?**	No	
Aerosol Cans?	No		**PCB Mass (lbs)**	0	
Non-Mixed Hazardous Waste Present?	No		**Sealed Containers Over 4L?**	No	

Non-Radionuclide Pyrophoric Materials Present? No

Waste exhibiting the characteristics of Ignitability, Corrosivity or Reactivity Present? No

Wastes Incompatible with backfill, seal and panel closure materials, container and packaging materials,shipping container or other wastes? No

Impenetrable Dense Objects? No

Waste Material Items

Packaging Materials

Material Item	Quantity	Unit	Unit Wt(lbs)	Item Wt(lbs)
Drum plastic bag	1.000	EACH	1.000	1.000
55-GAL DRUM (17c)	1.000	EACH	59.000	59.000

Waste Items byWeight

Material Item	Quantity	Unit	Unit Wt(lbs)	Item Wt(lbs)
metal waste	1.000	EACH	15.000	15.000
Plastic bag for waste	1.000	EACH	0.250	0.250
Leaded rubber glove	4.000	EACH	5.500	22.000

Waste Items by Volume

Material Item	Quantity	Unit	Unit Wt(lbs)	Item Wt(lbs)
Liquids for Other Inorganics	0.090	PINTS	1.000	0.090

Batch Id RTR14-00233 **Container Id** 10310323 **Analysis Id** 0000100223

Waste Parameters

Waste Parameter	Remaining Weight %	Actual Weight Lbs
Iron-based Metals/Alloys	0.000	15.000
Aluminum-based Metals/Alloys	0.000	0.000
Other metals	0.000	0.000
Other Inorganic Materials	60.000	28.155
Cellulosics	0.000	0.000
Rubber	0.000	22.000
Plastic (Waste Materials)	40.000	18.960
Inorganic matrix	0.000	0.000
Organic matrix	0.000	0.000
Soils/gravel	0.000	0.000
Steel (packaging materials)	0.000	142.000
Plastic (packaging materials)	0.000	1.000
Cellulosics Packaging	0.000	0.000
MLLW Waste	0.000	0.000

Analysis Esignature History

Esig Approval Id	User Id	Esignature Date	Comment
2807911	NKIRK	12-AUG-2014 13:16	This batch is returned for rework. AK does not concur with the recommended IDC change for containers: 10345547, 10342406, 10323336, 10313854, 10312438, 10312166, 10308495, 10308472, 10308221, 10308059, 10308033, 10305211, 10300329, 10291751 and 10291747. Ndk 8/12/14
2806061	DGREEN	09-AUG-2014 11:22	

Batch Id RTR14-00233 **Container Id** 10305211 **Analysis Id** 0000100224

Container Type C drum, 83 Gallon **Analysis Status** Pass

RTR Date 09-AUG-2014 11:38 **Gross Weight** 529.200 **Lbs.** **Net Weight** 386.200 **Lbs.**

Equipment Z-213-101 **Waste Matrix Code** S3900 **IDC** SD-176 Pre-1980 INL-Exhumed SDA Homogeneous Solids

Recording Id 1RTR14-00142 **Procedure Id** INST-OI-12 **Revision** 54

Is Test Pattern Resolution Ok? Yes **Start Side** A **Replicate** No **Approval Level** SPM

Audio Visual Ok? Yes **Operator** DGREEN **OIO** No

Result Comment

Breached inverted OP appears to contain sludge.
AK does not concur with recommended IDC UN-00A but instead recommends IDC SD-176 for container 10305211 based on waste description and retrieval location. Ndk 8/12/14
Rework: Recommended an IDC of SD-176 per AK result comment. MS 08/13/2014
AK concurs with recommended IDC SD-176 for container 10305211. No NCR or AKR is required. Ndk 8/14/14
corrected Impenetrable objects question. RBT 8/18/14

Package

IDC Correct Yes **Recommended IDC** SD-176 **Summary Category** S3000

Idc Change Reason Per AK

Rigid Liner Present? No **LinerType** NO LINER

Liner Punctured? N/A **Sharp Objects?** No

Liner Lid Present? No **Sharp Objects Are Protected?** Yes

Liner Lid Deformed? N/A **Layers Of Confinement** 1

Fill Factor 93

Bag Closure Method Twisted and Taped

Liquids

Liquid Present? No **Internal Container with Liquid** No

Internal Container with Liquid 0 pints **LA Candidate** No

Liquid Between Liner & Drum 0 pints **Containerized Liquid**

Total Liquid Amount 0 pints **Containerized Liquid Amt** 0 pints

Other Liquids 0 pints **Comment**

Prohibited Liquids Present No **Comment**

Contents-Drum or Box

	Value	Comment		Value	Comment
Lead?	No		**Mercury Present?**	No	
Wet Cell Batteries?	No		**Explosives?**	No	
Prohibited Compressed Gases?	No		**PCBs Present?**	Yes - Acceptable	No liquid.
Aerosol Cans?	No		**PCB Mass (lbs)**	386.2	
Non-Mixed Hazardous Waste Present?	No		**Sealed Containers Over 4L?**	No	

Non-Radionuclide Pyrophoric Materials Present? No

Waste exhibiting the characteristics of Ignitability, Corrosivity or Reactivity Present? No

Wastes Incompatible with backfill, seal and panel closure materials, container and packaging materials,shipping container or other wastes? No

Impenetrable Dense Objects? No

Waste Material Items

Packaging Materials

Material Item	Quantity	Unit	Unit Wt(lbs)	Item Wt(lbs)
Drum plastic bag	1.000	EACH	1.000	1.000
55-GAL DRUM (17c)	1.000	EACH	59.000	59.000

Waste Items byWeight

Material Item	Quantity	Unit	Unit Wt(lbs)	Item Wt(lbs)

Batch Id RTR14-00233 **Container Id** 10305211 **Analysis Id** 0000100224

Waste Items by Volume

Material Item	Quantity	Unit	Unit Wt(lbs)	Item Wt(lbs)

Waste Parameters

Waste Parameter	Remaining Weight %	Actual Weight Lbs
Iron-based Metals/Alloys	0.000	0.000
Aluminum-based Metals/Alloys	0.000	0.000
Other metals	0.000	0.000
Other Inorganic Materials	0.000	0.000
Cellulosics	0.000	0.000
Rubber	0.000	0.000
Plastic (Waste Materials)	0.000	0.000
Inorganic matrix	0.000	0.000
Organic matrix	100.000	386.200
Soils/gravel	0.000	0.000
Steel (packaging materials)	0.000	142.000
Plastic (packaging materials)	0.000	1.000
Cellulosics Packaging	0.000	0.000
MLLW Waste	0.000	0.000

Analysis Esignature History

Esig Approval Id	User Id	Esignature Date	Comment
2815062	RBTHOMPSON	18-AUG-2014 09:39	
2809171	NKIRK	14-AUG-2014 07:36	This batch is promoted. ndk 8/14/14
2808362	MSORENSON	13-AUG-2014 07:58	rework
2807917	NKIRK	12-AUG-2014 13:16	This batch is returned for rework. AK does not concur with the recommended IDC change for containers: 10345547, 10342406, 10323336, 10313854, 10312438, 10312166, 10308495, 10308472, 10308221, 10308059, 10308033, 10305211, 10300329, 10291751 and 10291747. Ndk 8/12/14
2806066	DGREEN	09-AUG-2014 11:38	

Batch Id RTR14-00233 **Container Id** 10345547 **Analysis Id** 0000100228

Container Type C drum, 83 Gallon **Analysis Status** Pass

RTR Date 09-AUG-2014 12:35 **Gross Weight** 734.265 **Lbs.** **Net Weight** 591.265 **Lbs**

Equipment Z-213-101 **Waste Matrix Code** S3143 **IDC** RF-745 Pits 11 & 12 Evaporator Salts

Recording Id 1RTR14-00142 **Procedure Id** INST-OI-12 **Revision** 54 **Approval Level** SPM

Is Test Pattern Resolution Ok? Yes **Start Side** A **Replicate** No **OIO** No

Audio Visual Ok? Yes **Operator** SPHILLIPS

Result Comment This drum contains Soil..
AK does not concur with recommended IDC UN-00C but instead recommends IDC RF-745 for container 10345547 based on RTR and Assay review. Ndk 8/12/14
Rework: Recommended an IDC of RF-745 per AK result comment. MS 08/13/2014
AK concurs with recommended IDC RF-745 for container 10345547. No NCR or AKR is required. Ndk 8/14/14
Corrected waste parameters and impenetrable objects question. RBT 8/18/14
Disregard remaining waste comment above, Remaining Waste is Salts. RBT 8/18/14

Package

IDC Correct Yes **Recommended IDC** RF-745 **Summary Category** S3000

Idc Change Reason Per AK

Rigid Liner Present? No **LinerType** NO LINER

Liner Punctured? N/A **Sharp Objects?** No

Liner Lid Present? No **Sharp Objects Are Protected?** Yes

Liner Lid Deformed? N/A **Layers Of Confinement** 1

Fill Factor 85

Bag Closure Method Twisted and Taped

Liquids

Liquid Present? No **Internal Container with Liquid** No

Internal Container with Liquid 0 pints **LA Candidate** No

Liquid Between Liner & Drum 0 pints **Containerized Liquid**

Containerized Liquid Amt 0 pints

Total Liquid Amount 0 pints

Other Liquids 0 pints **Comment**

Prohibited Liquids Present No **Comment**

Contents-Drum or Box

	Value	Comment		Value	Comment
Lead?	No		Mercury Present?	No	
Wet Cell Batteries?	No		Explosives?	No	
Prohibited Compressed Gases?	No		PCBs Present?	No	
Aerosol Cans?	No		PCB Mass (lbs)	0	
Non-Mixed Hazardous Waste Present?	No		Sealed Containers Over 4L?	No	

Non-Radionuclide Pyrophoric Materials Present? No

Waste exhibiting the characteristics of Ignitability, Corrosivity or Reactivity Present? No

Wastes Incompatible with backfill, seal and panel closure materials, container and packaging materials,shipping container or other wastes? No

Impenetrable Dense Objects? No

Waste Material Items

Packaging Materials

Material Item	Quantity	Unit	Unit Wt(lbs)	Item Wt(lbs)
Drum plastic bag	1.000	EACH	1.000	1.000
55-GAL DRUM (17c)	1.000	EACH	59.000	59.000

Waste Items byWeight

Material Item	Quantity	Unit	Unit Wt(lbs)	Item Wt(lbs)

Batch Id RTR14-00233 **Container Id** 10345547 **Analysis Id** 0000100228

Waste Items by Volume

Material Item	Quantity	Unit	Unit Wt(lbs)	Item Wt(lbs)

Waste Parameters

Waste Parameter	Remaining Weight %	Actual Weight Lbs
Iron-based Metals/Alloys	0.000	0.000
Aluminum-based Metals/Alloys	0.000	0.000
Other metals	0.000	0.000
Other Inorganic Materials	100.000	591.265
Cellulosics	0.000	0.000
Rubber	0.000	0.000
Plastic (Waste Materials)	0.000	0.000
Inorganic matrix	0.000	0.000
Organic matrix	0.000	0.000
Soils/gravel	0.000	0.000
Steel (packaging materials)	0.000	142.000
Plastic (packaging materials)	0.000	1.000
Cellulosics Packaging	0.000	0.000
MLLW Waste	0.000	0.000

Analysis Esignature History

Esig Approval Id	User Id	Esignature Date	Comment
2815185	RBTHOMPSON	18-AUG-2014 12:12	
2815096	RBTHOMPSON	18-AUG-2014 10:23	
2809160	NKIRK	14-AUG-2014 07:36	This batch is promoted. ndk 8/14/14
2808387	MSORENSON	13-AUG-2014 08:09	rework
2807905	NKIRK	12-AUG-2014 13:16	This batch is returned for rework. AK does not concur with the recommended IDC change for containers: 10345547, 10342406, 10323336, 10313854, 10312438, 10312166, 10308495, 10308472, 10308221, 10308059, 10308033, 10305211, 10300329, 10291751 and 10291747. Ndk 8/12/14
2806086	SPHILLIPS	09-AUG-2014 12:35	

Batch Id RTR14-00233 **Container Id** 10312166 **Analysis Id** 0000100229

Container Type C drum, 83 Gallon **Analysis Status** Pass

RTR Date 09-AUG-2014 12:54 **Gross Weight** 582.120 **Lbs.** **Net Weight** 439.120 **Lbs**

Equipment Z-213-101 **Waste Matrix Code** S3900 **IDC** SD-176 Pre-1980 INL-Exhumed SDA Homogeneous Solids

Recording Id 1RTR14-00142 **Procedure Id** INST-OI-12 **Revision**

Is Test Pattern Resolution Ok? Yes **Start Side** A **Replicate** 54 **Approval Level** SPM

Audio Visual Ok? Yes **Operator** No **OIO** No

SPHILLIPS

Result Comment

This drum contains Sludge.
AK does not concur with recommended IDC UN-00A but instead recommends IDC SD-176 for container 10312166 based on waste description and retrieval location. Ndk 8/12/14
Rework: Recommended an IDC of SD-176 per AK result comment. MS 08/13/2014
AK concurs with recommended IDC SD-176 for container 10312166. No NCR or AKR is required. Ndk Corrected Impenetrable objects question. RBT 8/18/14

Package

IDC Correct Yes **Recommended IDC** SD-176 **Summary Category** S3000

Idc Change Reason Per AK

Rigid Liner Present? No **LinerType** NO LINER

Liner Punctured? N/A **Sharp Objects?** No

Liner Lid Present? No **Sharp Objects Are Protected?** Yes

Liner Lid Deformed? N/A **Layers Of Confinement** 1

Fill Factor 95

Bag Closure Method Twisted and Taped

Liquids

Liquid Present? No **Internal Container with Liquid** No

Internal Container with Liquid 0 pints **LA Candidate** No

Liquid Between Liner & Drum 0 pints **Containerized Liquid**

Total Liquid Amount 0 pints **Containerized Liquid Amt** 0 pints

Other Liquids 0 pints **Comment**

Prohibited Liquids Present No **Comment**

Contents-Drum or Box

	Value	Comment		Value	Comment
Lead?	No		**Mercury Present?**	No	
Wet Cell Batteries?	No		**Explosives?**	No	
Prohibited Compressed Gases?	No		**PCBs Present?**	Yes - Acceptable	PCB waste
Aerosol Cans?	No		**PCB Mass (lbs)**	439.12	
Non-Mixed Hazardous Waste Present?	No		**Sealed Containers Over 4L?**	No	

Non-Radionuclide Pyrophoric Materials Present? No

Waste exhibiting the characteristics of Ignitability, Corrosivity or Reactivity Present? No

Wastes Incompatible with backfill, seal and panel closure materials, container and packaging materials,shipping container or other wastes? No

Impenetrable Dense Objects? No

Waste Material Items

Packaging Materials

Material Item	Quantity	Unit	Unit Wt(lbs)	Item Wt(lbs)
Drum plastic bag	1.000	EACH	1.000	1.000
55-GAL DRUM (17c)	1.000	EACH	59.000	59.000

Waste Items byWeight

Material Item	Quantity	Unit	Unit Wt(lbs)	Item Wt(lbs)

Batch Id RTR14-00233 **Container Id** 10312166 **Analysis Id** 0000100229

Waste Items by Volume

Material Item	Quantity	Unit	Unit Wt(lbs)	Item Wt(lbs)

Waste Parameters

Waste Parameter	Remaining Weight %	Actual Weight Lbs
Iron-based Metals/Alloys	0.000	0.000
Aluminum-based Metals/Alloys	0.000	0.000
Other metals	0.000	0.000
Other Inorganic Materials	0.000	0.000
Cellulosics	0.000	0.000
Rubber	0.000	0.000
Plastic (Waste Materials)	0.000	0.000
Inorganic matrix	0.000	0.000
Organic matrix	100.000	439.120
Soils/gravel	0.000	0.000
Steel (packaging materials)	0.000	142.000
Plastic (packaging materials)	0.000	1.000
Cellulosics Packaging	0.000	0.000
MLLW Waste	0.000	0.000

Analysis Esignature History

Esig Approval Id	User Id	Esignature Date	Comment
2815067	RBTHOMPSON	18-AUG-2014 09:49	
2809165	NKIRK	14-AUG-2014 07:36	This batch is promoted. ndk 8/14/14
2808377	MSORENSON	13-AUG-2014 08:04	rework
2807910	NKIRK	12-AUG-2014 13:16	This batch is returned for rework. AK does not concur with the recommended IDC change for containers: 10345547, 10342406, 10323336, 10313854, 10312438, 10312166, 10308495, 10308472, 10308221, 10308059, 10308033, 10305211, 10300329, 10291751 and 10291747. Ndk 8/12/14
2806098	SPHILLIPS	09-AUG-2014 12:54	

Batch Id RTR14-00233 **Container Id** 10308033 **Analysis Id** 0000100231

Container Type C drum, 83 Gallon **Analysis Status** Pass

RTR Date 09-AUG-2014 13:09 **Gross Weight** 551.250 **Lbs.** **Net Weight** 409.250 **Lbs.**

Equipment Z-213-101 **Waste Matrix Code** S5490 **IDC** SD-177 Pre-1980 INL-Exhumed SDA Heterogeneous Debris

Recording Id 1RTR14-00142 **Procedure Id** INST-OI-12 **Revision**

Is Test Pattern Resolution Ok? Yes **Start Side** A **Replicate** 54 **Approval Level** SPM

Audio Visual Ok? Yes **Operator** No **OIO** No

SPHILLIPS

Result Comment

This drum contains metal debris in the form of sheet metal.
AK does not concur with recommended IDC UN-00B but instead recommends IDC SD-177 for container 10308033 based on waste description and retrieval location. Ndk 8/12/14
Rework: Recommended an IDC of SD-177 per AK result comment. MS 08/13/2014
AK concurs with recommended IDC SD-177 for container 10308033. No NCR or AKR is required. Ndk 8/14/14
Corrected Bag Closure Method RBT 8/18/14

Package

IDC Correct Yes **Recommended IDC** SD-177 **Summary Category** S5000

Idc Change Reason Per AK

Rigid Liner Present? No **LinerType** NO LINER

Liner Punctured? N/A **Sharp Objects?** No

Liner Lid Present? No **Sharp Objects Are Protected?** Yes

Liner Lid Deformed? N/A **Layers Of Confinement** 0

Fill Factor 75

Bag Closure Method No Bags

Liquids

Liquid Present? No **Internal Container with Liquid** No

Internal Container with Liquid 0 pints **LA Candidate** No

Liquid Between Liner & Drum 0 pints **Containerized Liquid**

Total Liquid Amount 0 pints **Containerized Liquid Amt** 0 pints

Other Liquids 0 pints **Comment**

Prohibited Liquids Present No **Comment**

Contents-Drum or Box

	Value	Comment		Value	Comment
Lead?	No		**Mercury Present?**	No	
Wet Cell Batteries?	No		**Explosives?**	No	
Prohibited Compressed Gases?	No		**PCBs Present?**	No	
Aerosol Cans?	No		**PCB Mass (lbs)**	0	
Non-Mixed Hazardous Waste Present?	No		**Sealed Containers Over 4L?**	No	

Non-Radionuclide Pyrophoric Materials Present? No

Waste exhibiting the characteristics of Ignitability, Corrosivity or Reactivity Present? No

Wastes Incompatible with backfill, seal and panel closure materials, container and packaging materials,shipping container or other wastes? No

Impenetrable Dense Objects? Yes - Unacceptable Unable to penetrate 50% of the waste.

Waste Material Items

Packaging Materials

Material Item	Quantity	Unit	Unit Wt(lbs)	Item Wt(lbs)
55-GAL DRUM (17c)	1.000	EACH	59.000	59.000

Waste Items byWeight

Material Item	Quantity	Unit	Unit Wt(lbs)	Item Wt(lbs)

Batch Id RTR14-00233 **Container Id** 10308033 **Analysis Id** 0000100231

Waste Items by Volume

Material Item	Quantity	Unit	Unit Wt(lbs)	Item Wt(lbs)

Waste Parameters

Waste Parameter	Remaining Weight %	Actual Weight Lbs
Iron-based Metals/Alloys	100.000	409.250
Aluminum-based Metals/Alloys	0.000	0.000
Other metals	0.000	0.000
Other Inorganic Materials	0.000	0.000
Cellulosics	0.000	0.000
Rubber	0.000	0.000
Plastic (Waste Materials)	0.000	0.000
Inorganic matrix	0.000	0.000
Organic matrix	0.000	0.000
Soils/gravel	0.000	0.000
Steel (packaging materials)	0.000	142.000
Plastic (packaging materials)	0.000	0.000
Cellulosics Packaging	0.000	0.000
MLLW Waste	0.000	0.000

Analysis Esignature History

Esig Approval Id	User Id	Esignature Date	Comment
2815064	RBTHOMPSON	18-AUG-2014 09:41	
2809170	NKIRK	14-AUG-2014 07:36	This batch is promoted. ndk 8/14/14
2808364	MSORENSON	13-AUG-2014 07:59	rework
2807916	NKIRK	12-AUG-2014 13:16	This batch is returned for rework. AK does not concur with the recommended IDC change for containers: 10345547, 10342406, 10323336, 10313854, 10312438, 10312166, 10308495, 10308472, 10308221, 10308059, 10308033, 10305211, 10300329, 10291751 and 10291747. Ndk 8/12/14
2806113	SPHILLIPS	09-AUG-2014 13:09	

Batch Id RTR14-00233 **Container Id** 10313854 **Analysis Id** 0000100233

Container Type C drum, 83 Gallon **Analysis Status** Pass

RTR Date 09-AUG-2014 13:26 **Gross Weight** 154.350 Lbs. **Net Weight** 20.350 Lbs

Equipment Z-213-101 **Waste Matrix Code** S5490 **IDC** SD-177 Pre-1980 INL-Exhumed SDA Heterogeneous Debris

Recording Id 1RTR14-00142 **Procedure Id** INST-OI-12 **Revision**

Is Test Pattern Resolution Ok? Yes **Start Side** A **Replicate** 54 **Approval Level** SPM

Audio Visual Ok? Yes **Operator** No **OIO** No

SPHILLIPS

Result Comment

This drum contains Cellulosics in the form of towels and wipes.
AK does not concur with recommended IDC UN-00B but instead recommends IDC SD-177 for container 10313854 based on waste description and retrieval location. Ndk 8/12/14
Rework: Recommended an IDC of SD-177 per AK result comment. MS 08/13/2014
AK concurs with recommended IDC SD-177 for container 10313854. No NCR or AKR is required. Ndk 8/14/14

Package

IDC Correct Yes **Recommended IDC** SD-177 **Summary Category** S5000

Idc Change Reason Per AK

Rigid Liner Present? No **LinerType** NO LINER

Liner Punctured? N/A **Sharp Objects?** No

Liner Lid Present? No **Sharp Objects Are Protected?** Yes

Liner Lid Deformed? N/A **Layers Of Confinement** 1

Fill Factor 80

Bag Closure Method Twisted and Taped

Liquids

Liquid Present? No **Internal Container with Liquid** No

Internal Container with Liquid 0 pints **LA Candidate** No

Liquid Between Liner & Drum 0 pints **Containerized Liquid**

Total Liquid Amount 0 pints **Containerized Liquid Amt** 0 pints

Other Liquids 0 pints **Comment**

Prohibited Liquids Present No **Comment**

Contents-Drum or Box

	Value	Comment		Value	Comment
Lead?	Yes, Acceptable	scrap led / lead tape	**Mercury Present?**	No	
Wet Cell Batteries?	No		**Explosives?**	No	
Prohibited Compressed Gases?	No		**PCBs Present?**	No	
Aerosol Cans?	No		**PCB Mass (lbs)**	0	
Non-Mixed Hazardous Waste Present?	No		**Sealed Containers Over 4L?**	No	

Non-Radionuclide Pyrophoric Materials Present? No

Waste exhibiting the characteristics of Ignitability, Corrosivity or Reactivity Present? No

Wastes Incompatible with backfill, seal and panel closure materials, container and packaging materials,shipping container or other wastes? No

Impenetrable Dense Objects? No

Waste Material Items

Packaging Materials

Material Item	Quantity	Unit	Unit Wt(lbs)	Item Wt(lbs)
55 gallon drum	1.000	EACH	50.000	50.000
Drum plastic bag	1.000	EACH	1.000	1.000

Waste Items byWeight

Material Item	Quantity	Unit	Unit Wt(lbs)	Item Wt(lbs)
lead	1.000	EACH	0.500	0.500
plastic waste	1.000	EACH	2.000	2.000
metal debris	1.000	EACH	5.000	5.000
D-cell Battery	5.000	EACH	0.250	1.250

Batch Id RTR14-00233 **Container Id** 10313854 **Analysis Id** 0000100233

Waste Items by Volume

Material Item	Quantity	Unit	Unit Wt(lbs)	Item Wt(lbs)

Waste Parameters

Waste Parameter	Remaining Weight %	Actual Weight Lbs
Iron-based Metals/Alloys	0.000	5.000
Aluminum-based Metals/Alloys	0.000	0.000
Other metals	0.000	1.750
Other Inorganic Materials	0.000	0.000
Cellulosics	100.000	11.600
Rubber	0.000	0.000
Plastic (Waste Materials)	0.000	2.000
Inorganic matrix	0.000	0.000
Organic matrix	0.000	0.000
Soils/gravel	0.000	0.000
Steel (packaging materials)	0.000	133.000
Plastic (packaging materials)	0.000	1.000
Cellulosics Packaging	0.000	0.000
MLLW Waste	0.000	0.000

Analysis Esignature History

Esig Approval Id	User Id	Esignature Date	Comment
2809163	NKIRK	14-AUG-2014 07:36	This batch is promoted. ndk 8/14/14
2808381	MSORENSON	13-AUG-2014 08:06	rework
2807908	NKIRK	12-AUG-2014 13:16	This batch is returned for rework. AK does not concur with the recommended IDC change for containers: 10345547, 10342406, 10323336, 10313854, 10312438, 10312166, 10308495, 10308472, 10308221, 10308059, 10308033, 10305211, 10300329, 10291751 and 10291747. Ndk 8/12/14
2806124	SPHILLIPS	09-AUG-2014 13:26	

Batch Id RTR14-00233 **Container Id** 10526844 **Analysis Id** 0000100235

Container Type 7A85 85 Gallon Open Head drum, DOT 7A **Analysis Status** Pass

RTR Date 09-AUG-2014 14:17 **Gross Weight** 526.995 **Lbs.** **Net Weight** 387.995 **Lbs.**
Equipment Z-213-101 **Waste Matrix Code** S3121 **IDC** RF-002 Second Stage Sludge
Recording Id 1RTR14-00142 **Procedure Id** INST-OI-12 **Revision** 54 **Approval Level** SPM
Is Test Pattern Resolution Ok? Yes **Start Side** A **Replicate** No **OIO** No
Audio Visual Ok? Yes **Operator** SPHILLIPS
Result Comment This drum contains Sludge.

Package

IDC Correct Yes **Recommended IDC** **Summary Category** S3000
Idc Change Reason
Rigid Liner Present? No **LinerType** NO LINER
Liner Punctured? N/A **Sharp Objects?** No
Liner Lid Present? No **Sharp Objects Are Protected?** Yes
Liner Lid Deformed? N/A **Layers Of Confinement** 0
Fill Factor 95
Bag Closure Method No Bags

Liquids

Liquid Present? No **Internal Container with Liquid** No
Internal Container with Liquid 0 pints **LA Candidate** No
Liquid Between Liner & Drum 0 pints **Containerized Liquid**
Total Liquid Amount 0 pints **Containerized Liquid Amt** 0 pints
Other Liquids 0 pints **Comment**
Prohibited Liquids Present No **Comment**

Contents-Drum or Box

	Value	Comment		Value	Comment
Lead?	No		**Mercury Present?**	No	
Wet Cell Batteries?	No		**Explosives?**	No	
Prohibited Compressed Gases?	No		**PCBs Present?**	No	
Aerosol Cans?	No		**PCB Mass (lbs)**	0	
Non-Mixed Hazardous Waste Present?	No		**Sealed Containers Over 4L?**	No	

Non-Radionuclide Pyrophoric Materials Present? No
Waste exhibiting the characteristics of Ignitability, Corrosivity or Reactivity Present? No
Wastes Incompatible with backfill, seal and panel closure materials, container and packaging materials,shipping container or other wastes? No
Impenetrable Dense Objects? No

Waste Material Items

Packaging Materials

Material Item	Quantity	Unit	Unit Wt(lbs)	Item Wt(lbs)
55-GAL DRUM (17c)	1.000	EACH	59.000	59.000

Waste Items byWeight

Material Item	Quantity	Unit	Unit Wt(lbs)	Item Wt(lbs)

Waste Items by Volume

Material Item	Quantity	Unit	Unit Wt(lbs)	Item Wt(lbs)

Batch Id RTR14-00233 **Container Id** 10526844 **Analysis Id** 0000100235

Waste Parameters

Waste Parameter	Remaining Weight %	Actual Weight Lbs
Iron-based Metals/Alloys	0.000	0.000
Aluminum-based Metals/Alloys	0.000	0.000
Other metals	0.000	0.000
Other Inorganic Materials	0.000	0.000
Cellulosics	0.000	0.000
Rubber	0.000	0.000
Plastic (Waste Materials)	0.000	0.000
Inorganic matrix	100.000	387.995
Organic matrix	0.000	0.000
Soils/gravel	0.000	0.000
Steel (packaging materials)	0.000	139.000
Plastic (packaging materials)	0.000	0.000
Cellulosics Packaging	0.000	0.000
MLLW Waste	0.000	0.000

Analysis Esignature History

Esig Approval Id	User Id	Esignature Date	Comment
2806157	SPHILLIPS	09-AUG-2014 14:17	

Batch Id RTR14-00233 **Container Id** 10526845 **Analysis Id** 0000100236

Container Type 7A85 85 Gallon Open Head drum, DOT 7A **Analysis Status** Pass

RTR Date 09-AUG-2014 14:39 **Gross Weight** 538.020 **Lbs.** **Net Weight** 399.020 **Lbs.**
Equipment Z-213-101 **Waste Matrix Code** S3121 **IDC** RF-001 First Stage Sludge
Recording Id 1RTR14-00142 **Procedure Id** INST-OI-12 **Revision** 54 **Approval Level** SPM
Is Test Pattern Resolution Ok? Yes **Start Side** A **Replicate** No **OIO** No
Audio Visual Ok? Yes **Operator** SPHILLIPS
Result Comment This drum contains Sludge.

Package

IDC Correct Yes **Recommended IDC** **Summary Category** S3000
Idc Change Reason
Rigid Liner Present? No **LinerType** NO LINER
Liner Punctured? N/A **Sharp Objects?** No
Liner Lid Present? No **Sharp Objects Are Protected?** Yes
Liner Lid Deformed? N/A **Layers Of Confinement** 0
Fill Factor 95
Bag Closure Method No Bags

Liquids

Liquid Present? Yes **Internal Container with Liquid** No
Internal Container with Liquid 0 pints **LA Candidate** No
Liquid Between Liner & Drum 0 pints **Containerized Liquid**
Total Liquid Amount 3.5 pints **Containerized Liquid Amt** 0 pints
Other Liquids 3.5 pints **Comment** 3.5 pints of liquid located at bottom of drum.
Prohibited Liquids Present No **Comment**

Contents-Drum or Box

	Value	Comment		Value	Comment
Lead?	No		Mercury Present?	No	
Wet Cell Batteries?	No		Explosives?	No	
Prohibited Compressed Gases?	No		PCBs Present?	No	
Aerosol Cans?	No		PCB Mass (lbs)	0	
Non-Mixed Hazardous Waste Present?	No		Sealed Containers Over 4L?	No	

Non-Radionuclide Pyrophoric Materials Present? No
Waste exhibiting the characteristics of Ignitability, Corrosivity or Reactivity Present? No
Wastes Incompatible with backfill, seal and panel closure materials, container and packaging materials,shipping container or other wastes? No
Impenetrable Dense Objects? No

Waste Material Items

Packaging Materials

Material Item	Quantity	Unit	Unit Wt(lbs)	Item Wt(lbs)
55-GAL DRUM (17c)	1.000	EACH	59.000	59.000

Waste Items byWeight

Material Item	Quantity	Unit	Unit Wt(lbs)	Item Wt(lbs)

Waste Items by Volume

Material Item	Quantity	Unit	Unit Wt(lbs)	Item Wt(lbs)
Liquids for Inorganic Matrix	3.500	PINTS	1.000	3.500

Batch Id RTR14-00233 **Container Id** 10526845 **Analysis Id** 0000100236

Waste Parameters

Waste Parameter	Remaining Weight %	Actual Weight Lbs
Iron-based Metals/Alloys	0.000	0.000
Aluminum-based Metals/Alloys	0.000	0.000
Other metals	0.000	0.000
Other Inorganic Materials	0.000	0.000
Cellulosics	0.000	0.000
Rubber	0.000	0.000
Plastic (Waste Materials)	0.000	0.000
Inorganic matrix	100.000	399.020
Organic matrix	0.000	0.000
Soils/gravel	0.000	0.000
Steel (packaging materials)	0.000	139.000
Plastic (packaging materials)	0.000	0.000
Cellulosics Packaging	0.000	0.000
MLLW Waste	0.000	0.000

Analysis Esignature History

Esig Approval Id	User Id	Esignature Date	Comment
2806172	SPHILLIPS	09-AUG-2014 14:39	

Batch Id RTR14-00233 **Container Id** 10526846 **Analysis Id** 0000100241

Container Type 7A85 85 Gallon Open Head drum, DOT 7A **Analysis Status** Pass

RTR Date 09-AUG-2014 16:24 **Gross Weight** 551.250 **Lbs.** **Net Weight** 410.250 **Lbs**

Equipment Z-213-101 **Waste Matrix Code** S3114 **IDC** RF-003 Organic Setups, Oil Solids

Recording Id 1RTR14-00142 **Procedure Id** INST-OI-12 **Revision** 54 **Approval Level** SPM

Is Test Pattern Resolution Ok? Yes **Start Side** A **Replicate** No **OIO** No

Audio Visual Ok? Yes **Operator** SPHILLIPS

Result Comment This drum contains sludge.

Package

IDC Correct Yes **Recommended IDC** **Summary Category** S3000

Idc Change Reason

Rigid Liner Present? No **LinerType** NO LINER

Liner Punctured? N/A **Sharp Objects?** No

Liner Lid Present? No **Sharp Objects Are Protected?** Yes

Liner Lid Deformed? N/A **Layers Of Confinement** 2

Fill Factor 95

Bag Closure Method Twisted and Taped

Liquids

Liquid Present? No **Internal Container with Liquid** No

Internal Container with Liquid 0 pints **LA Candidate** No

Liquid Between Liner & Drum 0 pints **Containerized Liquid**

Total Liquid Amount 0 pints **Containerized Liquid Amt** 0 pints

Other Liquids 0 pints **Comment**

Prohibited Liquids Present No **Comment**

Contents-Drum or Box

	Value	Comment		Value	Comment
Lead?	No		**Mercury Present?**	No	
Wet Cell Batteries?	No		**Explosives?**	No	
Prohibited Compressed Gases?	No		**PCBs Present?**	Yes - Acceptable	PCB waste.
Aerosol Cans?	No		**PCB Mass (lbs)**	410.25	
Non-Mixed Hazardous Waste Present?	No		**Sealed Containers Over 4L?**	No	

Non-Radionuclide Pyrophoric Materials Present? No

Waste exhibiting the characteristics of Ignitability, Corrosivity or Reactivity Present? No

Wastes Incompatible with backfill, seal and panel closure materials, container and packaging materials,shipping container or other wastes? No

Impenetrable Dense Objects? No

Waste Material Items

Packaging Materials

Material Item	Quantity	Unit	Unit Wt(lbs)	Item Wt(lbs)
Drum plastic bag	2.000	EACH	1.000	2.000
55-GAL DRUM (17c)	1.000	EACH	59.000	59.000

Waste Items byWeight

Material Item	Quantity	Unit	Unit Wt(lbs)	Item Wt(lbs)

Waste Items by Volume

Material Item	Quantity	Unit	Unit Wt(lbs)	Item Wt(lbs)

Batch Id RTR14-00233 **Container Id** 10526846 **Analysis Id** 0000100241

Waste Parameters

Waste Parameter	Remaining Weight %	Actual Weight Lbs
Iron-based Metals/Alloys	0.000	0.000
Aluminum-based Metals/Alloys	0.000	0.000
Other metals	0.000	0.000
Other Inorganic Materials	0.000	0.000
Cellulosics	0.000	0.000
Rubber	0.000	0.000
Plastic (Waste Materials)	0.000	0.000
Inorganic matrix	0.000	0.000
Organic matrix	100.000	410.250
Soils/gravel	0.000	0.000
Steel (packaging materials)	0.000	139.000
Plastic (packaging materials)	0.000	2.000
Cellulosics Packaging	0.000	0.000
MLLW Waste	0.000	0.000

Analysis Esignature History

Esig Approval Id	User Id	Esignature Date	Comment
2806251	SPHILLIPS	09-AUG-2014 16:24	

Batch Id RTR14-00233 **Container Id** 10291747 **Analysis Id** 0000100242

Container Type C drum, 83 Gallon **Analysis Status** Pass

RTR Date 09-AUG-2014 16:37 **Gross Weight** 224.910 Lbs. **Net Weight** 82.910 Lbs

Equipment Z-213-101 **Waste Matrix Code** S5490 **IDC** RF-750 Pits 11 & 12 Debris

Recording Id 1RTR14-00142 **Procedure Id** INST-OI-12 **Revision** 54 **Approval Level** SPM

Is Test Pattern Resolution Ok? Yes **Start Side** A **Replicate** No **OIO** No

Audio Visual Ok? Yes **Operator** SPHILLIPS

Result Comment This drum contains plastic waste in the form of sheeting and ppe.
AK does not concur with recommended IDC UN-00B but instead recommends IDC RF-750 for container 10291747 based on waste description, container markings and retrieval location. Ndk 8/12/14
Rework: Recommended an IDC of RF-750 per AK result comment. MS 08/13/2014
AK concurs with recommended IDC RF-750 for container 10291747. No NCR or AKR is required. Ndk 8/14/14

Package

IDC Correct Yes **Recommended IDC** RF-750 **Summary Category** S5000

Idc Change Reason Per AK

Rigid Liner Present? No **LinerType** NO LINER

Liner Punctured? N/A **Sharp Objects?** No

Liner Lid Present? No **Sharp Objects Are Protected?** Yes

Liner Lid Deformed? N/A **Layers Of Confinement** 0

Fill Factor 90

Bag Closure Method No Bags

Liquids

Liquid Present? No **Internal Container with Liquid** No

Internal Container with Liquid 0 pints **LA Candidate** No

Liquid Between Liner & Drum 0 pints **Containerized Liquid**

Total Liquid Amount 0 pints **Containerized Liquid Amt** 0 pints

Other Liquids 0 pints **Comment**

Prohibited Liquids Present No **Comment**

Contents-Drum or Box

	Value	Comment		Value	Comment
Lead?	No		**Mercury Present?**	No	
Wet Cell Batteries?	No		**Explosives?**	No	
Prohibited Compressed Gases?	No		**PCBs Present?**	No	
Aerosol Cans?	No		**PCB Mass (lbs)**	0	
Non-Mixed Hazardous Waste Present?	No		**Sealed Containers Over 4L?**	No	

Non-Radionuclide Pyrophoric Materials Present? No

Waste exhibiting the characteristics of Ignitability, Corrosivity or Reactivity Present? No

Wastes Incompatible with backfill, seal and panel closure materials, container and packaging materials,shipping container or other wastes? No

Impenetrable Dense Objects? No

Waste Material Items

Packaging Materials

Material Item	Quantity	Unit	Unit Wt(lbs)	Item Wt(lbs)
55-GAL DRUM (17c)	1.000	EACH	59.000	59.000

Waste Items byWeight

Material Item	Quantity	Unit	Unit Wt(lbs)	Item Wt(lbs)
paper and rags	1.000	EACH	8.000	8.000
metal debris	1.000	EACH	5.000	5.000
respirator masks	2.000	EACH	3.000	6.000
D-cell Battery	6.000	EACH	0.250	1.500
Respirator Cartridges	6.000	EACH	0.250	1.500

Batch Id RTR14-00233 **Container Id** 10291747 **Analysis Id** 0000100242

Waste Items by Volume

Material Item	Quantity	Unit	Unit Wt(lbs)	Item Wt(lbs)

Waste Parameters

Waste Parameter	Remaining Weight %	Actual Weight Lbs
Iron-based Metals/Alloys	0.000	5.000
Aluminum-based Metals/Alloys	0.000	1.050
Other metals	0.000	1.500
Other Inorganic Materials	0.000	0.000
Cellulosics	0.000	8.450
Rubber	0.000	6.000
Plastic (Waste Materials)	100.000	60.910
Inorganic matrix	0.000	0.000
Organic matrix	0.000	0.000
Soils/gravel	0.000	0.000
Steel (packaging materials)	0.000	142.000
Plastic (packaging materials)	0.000	0.000
Cellulosics Packaging	0.000	0.000
MLLW Waste	0.000	0.000

Analysis Esignature History

Esig Approval Id	User Id	Esignature Date	Comment
2809174	NKIRK	14-AUG-2014 07:36	This batch is promoted. ndk 8/14/14
2808359	MSORENSON	13-AUG-2014 07:54	rework
2807920	NKIRK	12-AUG-2014 13:16	This batch is returned for rework. AK does not concur with the recommended IDC change for containers: 10345547, 10342406, 10323336, 10313854, 10312438, 10312166, 10308495, 10308472, 10308221, 10308059, 10308033, 10305211, 10300329, 10291751 and 10291747. Ndk 8/12/14
2806257	SPHILLIPS	09-AUG-2014 16:37	

Batch Id RTR14-00233 **Container Id** 10526844 **Analysis Id** 0000100243

Container Type 7A85 85 Gallon Open Head drum, DOT 7A **Analysis Status** Pass

RTR Date 09-AUG-2014 16:53 **Gross Weight** 526.995 **Lbs.** **Net Weight** 387.995 **Lbs.**

Equipment Z-213-101 **Waste Matrix Code** S3121 **IDC** RF-002 Second Stage Sludge

Recording Id 1RTR14-00142 **Procedure Id** INST-OI-12 **Revision** 54 **Approval Level** SPM

Is Test Pattern Resolution Ok? Yes **Start Side** A **Replicate** Yes **OIO** No

Audio Visual Ok? Yes **Operator** KKEARN

Result Comment Waste consists of a sludge

Package

IDC Correct Yes **Recommended IDC** **Summary Category** S3000

Idc Change Reason

Rigid Liner Present? No **LinerType** NO LINER

Liner Punctured? N/A **Sharp Objects?** No

Liner Lid Present? No **Sharp Objects Are Protected?** Yes

Liner Lid Deformed? N/A **Layers Of Confinement** 0

Fill Factor 95

Bag Closure Method No Bags

Liquids

Liquid Present? No **Internal Container with Liquid** No

Internal Container with Liquid 0 pints **LA Candidate** No

Liquid Between Liner & Drum 0 pints **Containerized Liquid**

Total Liquid Amount 0 pints **Containerized Liquid Amt** 0 pints

Other Liquids 0 pints **Comment**

Prohibited Liquids Present No **Comment**

Contents-Drum or Box

	Value	Comment		Value	Comment
Lead?	No		**Mercury Present?**	No	
Wet Cell Batteries?	No		**Explosives?**	No	
Prohibited Compressed Gases?	No		**PCBs Present?**	No	
Aerosol Cans?	No		**PCB Mass (lbs)**	0	
Non-Mixed Hazardous Waste Present?	No		**Sealed Containers Over 4L?**	No	

Non-Radionuclide Pyrophoric Materials Present? No

Waste exhibiting the characteristics of Ignitability, Corrosivity or Reactivity Present? No

Wastes Incompatible with backfill, seal and panel closure materials, container and packaging materials,shipping container or other wastes? No

Impenetrable Dense Objects? No

Waste Material Items

Packaging Materials

Material Item	Quantity	Unit	Unit Wt(lbs)	Item Wt(lbs)
55-GAL DRUM (17c)	1.000	EACH	59.000	59.000

Waste Items byWeight

Material Item	Quantity	Unit	Unit Wt(lbs)	Item Wt(lbs)

Waste Items by Volume

Material Item	Quantity	Unit	Unit Wt(lbs)	Item Wt(lbs)

Batch Id RTR14-00233 **Container Id** 10526844 **Analysis Id** 0000100243

Waste Parameters

Waste Parameter	Remaining Weight %	Actual Weight Lbs
Iron-based Metals/Alloys	0.000	0.000
Aluminum-based Metals/Alloys	0.000	0.000
Other metals	0.000	0.000
Other Inorganic Materials	0.000	0.000
Cellulosics	0.000	0.000
Rubber	0.000	0.000
Plastic (Waste Materials)	0.000	0.000
Inorganic matrix	100.000	387.995
Organic matrix	0.000	0.000
Soils/gravel	0.000	0.000
Steel (packaging materials)	0.000	139.000
Plastic (packaging materials)	0.000	0.000
Cellulosics Packaging	0.000	0.000
MLLW Waste	0.000	0.000

Analysis Esignature History

Esig Approval Id	User Id	Esignature Date	Comment
2806258	KKEARN	09-AUG-2014 16:53	

Batch Id RTR14-00233 **Container Id** 10526846 **Analysis Id** 0000100245

Container Type 7A85 85 Gallon Open Head drum, DOT 7A **Analysis Status** Pass

RTR Date 09-AUG-2014 17:04 **Gross Weight** 551.250 Lbs. **Net Weight** 410.250 Lbs.
Equipment Z-213-101 **Waste Matrix Code** S3114 **IDC** RF-003 Organic Setups, Oil Solids
Recording Id 1RTR14-00142 **Procedure Id** INST-OI-12 **Revision** 54 **Approval Level** SPM
Is Test Pattern Resolution Ok? Yes **Start Side** A **Replicate** No **OIO** Yes
Audio Visual Ok? Yes **Operator** KKEARN
Result Comment Waste consists of a sludge

Package

IDC Correct Yes **Recommended IDC** **Summary Category** S3000
Idc Change Reason
Rigid Liner Present? No **LinerType** NO LINER
Liner Punctured? N/A **Sharp Objects?** No
Liner Lid Present? No **Sharp Objects Are Protected?** Yes
Liner Lid Deformed? N/A **Layers Of Confinement** 2
Fill Factor 95
Bag Closure Method Twisted and Taped

Liquids

Liquid Present? No **Internal Container with Liquid** No
Internal Container with Liquid 0 pints **LA Candidate** No
Liquid Between Liner & Drum 0 pints **Containerized Liquid**
Total Liquid Amount 0 pints **Containerized Liquid Amt** 0 pints
Other Liquids 0 pints **Comment**
Prohibited Liquids Present No **Comment**

Contents-Drum or Box

	Value	Comment		Value	Comment
Lead?	No		**Mercury Present?**	No	
Wet Cell Batteries?	No		**Explosives?**	No	
Prohibited Compressed Gases?	No		**PCBs Present?**	Yes - Acceptable	RF-003
Aerosol Cans?	No		**PCB Mass (lbs)**	410.25	
Non-Mixed Hazardous Waste Present?	No		**Sealed Containers Over 4L?**	No	

Non-Radionuclide Pyrophoric Materials Present? No
Waste exhibiting the characteristics of Ignitability, Corrosivity or Reactivity Present? No
Wastes Incompatible with backfill, seal and panel closure materials, container and packaging materials,shipping container or other wastes? No
Impenetrable Dense Objects? No

Waste Material Items

Packaging Materials

Material Item	Quantity	Unit	Unit Wt(lbs)	Item Wt(lbs)
Drum plastic bag	2.000	EACH	1.000	2.000
55-GAL DRUM (17c)	1.000	EACH	59.000	59.000

Waste Items byWeight

Material Item	Quantity	Unit	Unit Wt(lbs)	Item Wt(lbs)

Waste Items by Volume

Material Item	Quantity	Unit	Unit Wt(lbs)	Item Wt(lbs)

Batch Id RTR14-00233 **Container Id** 10526846 **Analysis Id** 0000100245

Waste Parameters

Waste Parameter	Remaining Weight %	Actual Weight Lbs
Iron-based Metals/Alloys	0.000	0.000
Aluminum-based Metals/Alloys	0.000	0.000
Other metals	0.000	0.000
Other Inorganic Materials	0.000	0.000
Cellulosics	0.000	0.000
Rubber	0.000	0.000
Plastic (Waste Materials)	0.000	0.000
Inorganic matrix	0.000	0.000
Organic matrix	100.000	410.250
Soils/gravel	0.000	0.000
Steel (packaging materials)	0.000	139.000
Plastic (packaging materials)	0.000	2.000
Cellulosics Packaging	0.000	0.000
MLLW Waste	0.000	0.000

Analysis Esignature History

Esig Approval Id	User Id	Esignature Date	Comment
2806266	KKEARN	09-AUG-2014 17:05	corrected PCB weight
2806265	KKEARN	09-AUG-2014 17:04	

Batch Id RTR14-00233 **Container Id** 10308495 **Analysis Id** 0000100253

Container Type C drum, 83 Gallon **Analysis Status** Pass

RTR Date 10-AUG-2014 08:58 **Gross Weight** 176.400 **Lbs.** **Net Weight** 32.400 **Lbs**

Equipment Z-213-101 **Waste Matrix Code** S5490 **IDC** SD-177 Pre-1980 INL-Exhumed SDA Heterogeneous Debris

Recording Id 1RTR14-00142 **Procedure Id** INST-OI-12 **Revision**

Is Test Pattern Resolution Ok? Yes **Start Side** A **Replicate** 54 **Approval Level** SPM

Audio Visual Ok? Yes **Operator** No **OIO** No

FKUCK

Result Comment

Waste contains primarily plastic coveralls.
AK does not concur with recommended IDC UN-00B but instead recommends IDC SD-177 for container 10308495 based on waste description and retrieval location. Ndk 8/12/14
Rework: Recommended an IDC of SD-177 per AK result comment. MS 08/13/2014
AK concurs with recommended IDC SD-177 for container 10308495. No NCR or AKR is required. Ndk 8/14/14

Package

IDC Correct Yes **Recommended IDC** SD-177 **Summary Category** S5000

Idc Change Reason Per AK

Rigid Liner Present? No **LinerType** NO LINER

Liner Punctured? N/A **Sharp Objects?** No

Liner Lid Present? No **Sharp Objects Are Protected?** Yes

Liner Lid Deformed? N/A **Layers Of Confinement** 3

Fill Factor 65

Bag Closure Method Twisted and Taped

Liquids

Liquid Present? No **Internal Container with Liquid** No

Internal Container with Liquid 0 pints **LA Candidate** No

Liquid Between Liner & Drum 0 pints **Containerized Liquid**

Total Liquid Amount 0 pints **Containerized Liquid Amt** 0 pints

Other Liquids 0 pints **Comment**

Prohibited Liquids Present No **Comment**

Contents-Drum or Box

	Value	Comment		Value	Comment
Lead?	Yes, Acceptable	leaded rubber gloves	**Mercury Present?**	No	
Wet Cell Batteries?	No		**Explosives?**	No	
Prohibited Compressed Gases?	No		**PCBs Present?**	No	
Aerosol Cans?	No		**PCB Mass (lbs)**	0	
Non-Mixed Hazardous Waste Present?	No		**Sealed Containers Over 4L?**	No	

Non-Radionuclide Pyrophoric Materials Present? No

Waste exhibiting the characteristics of Ignitability, Corrosivity or Reactivity Present? No

Wastes Incompatible with backfill, seal and panel closure materials, container and packaging materials,shipping container or other wastes? No

Impenetrable Dense Objects? No

Waste Material Items

Packaging Materials

Material Item	Quantity	Unit	Unit Wt(lbs)	Item Wt(lbs)
Drum plastic bag	2.000	EACH	1.000	2.000
55-GAL DRUM (17c)	1.000	EACH	59.000	59.000

Waste Items byWeight

Material Item	Quantity	Unit	Unit Wt(lbs)	Item Wt(lbs)
Fiber pack	2.000	EACH	6.000	12.000
Plastic bag for waste	1.000	EACH	0.250	0.250
Leaded rubber glove	2.000	EACH	5.500	11.000

Batch Id RTR14-00233 **Container Id** 10308495 **Analysis Id** 0000100253

Waste Items by Volume

Material Item	Quantity	Unit	Unit Wt(lbs)	Item Wt(lbs)

Waste Parameters

Waste Parameter	Remaining Weight %	Actual Weight Lbs
Iron-based Metals/Alloys	0.000	0.000
Aluminum-based Metals/Alloys	0.000	0.000
Other metals	0.000	0.000
Other Inorganic Materials	0.000	0.000
Cellulosics	0.000	12.000
Rubber	0.000	11.000
Plastic (Waste Materials)	100.000	9.400
Inorganic matrix	0.000	0.000
Organic matrix	0.000	0.000
Soils/gravel	0.000	0.000
Steel (packaging materials)	0.000	142.000
Plastic (packaging materials)	0.000	2.000
Cellulosics Packaging	0.000	0.000
MLLW Waste	0.000	0.000

Analysis Esignature History

Esig Approval Id	User Id	Esignature Date	Comment
2809166	NKIRK	14-AUG-2014 07:36	This batch is promoted. ndk 8/14/14
2808376	MSORENSON	13-AUG-2014 08:03	rework
2807912	NKIRK	12-AUG-2014 13:16	This batch is returned for rework. AK does not concur with the recommended IDC change for containers: 10345547, 10342406, 10323336, 10313854, 10312438, 10312166, 10308495, 10308472, 10308221, 10308059, 10308033, 10305211, 10300329, 10291751 and 10291747. Ndk 8/12/14
2806575	FKUCK	10-AUG-2014 08:58	

Batch Id RTR14-00233 **Container Id** 10342406 **Analysis Id** 0000100254

Container Type C drum, 83 Gallon **Analysis Status** Pass

RTR Date 10-AUG-2014 10:01 **Gross Weight** 306.495 **Lbs.** **Net Weight** 163.495 **Lbs.**

Equipment Z-213-101 **Waste Matrix Code** S3900 **IDC** SD-176 Pre-1980 INL-Exhumed SDA Homogeneous Solids

Recording Id 1RTR14-00142 **Procedure Id** INST-OI-12 **Revision** 54

Is Test Pattern Resolution Ok? Yes **Start Side** A **Replicate** No **Approval Level** SPM

Audio Visual Ok? Yes **Operator** FKUCK **OIO** No

Result Comment

Waste appears to be sludge.
AK does not concur with recommended IDC UN-00A but instead recommends IDC SD-176 for container 10342406 based on waste description and retrieval location. Ndk 8/12/14
Rework: Recommended an IDC of SD-176 per AK result comment. MS 08/13/2014
AK concurs with recommended IDC SD-176 for container 10342406. No NCR or AKR is required. Ndk 8/14/14
Corrected impenetrable objects question. RBT 8/18/14

Package

IDC Correct Yes **Recommended IDC** SD-176 **Summary Category** S3000

Idc Change Reason Per AK

Rigid Liner Present? No **LinerType** NO LINER

Liner Punctured? N/A **Sharp Objects?** No

Liner Lid Present? No **Sharp Objects Are Protected?** Yes

Liner Lid Deformed? N/A **Layers Of Confinement** 1

Fill Factor 40

Bag Closure Method Twisted and Taped

Liquids

Liquid Present? No **Internal Container with Liquid** No

Internal Container with Liquid 0 pints **LA Candidate** No

Liquid Between Liner & Drum 0 pints **Containerized Liquid**

Containerized Liquid Amt 0 pints

Total Liquid Amount 0 pints

Other Liquids 0 pints **Comment**

Prohibited Liquids Present No **Comment**

Contents-Drum or Box

	Value	Comment		Value	Comment
Lead?	No		**Mercury Present?**	No	
Wet Cell Batteries?	No		**Explosives?**	No	
Prohibited Compressed Gases?	No		**PCBs Present?**	Yes - Acceptable	no liquid
Aerosol Cans?	No		**PCB Mass (lbs)**	163.5	
Non-Mixed Hazardous Waste Present?	No		**Sealed Containers Over 4L?**	No	

Non-Radionuclide Pyrophoric Materials Present? No

Waste exhibiting the characteristics of Ignitability, Corrosivity or Reactivity Present? No

Wastes Incompatible with backfill, seal and panel closure materials, container and packaging materials,shipping container or other wastes? No

Impenetrable Dense Objects? No

Waste Material Items

Packaging Materials

Material Item	Quantity	Unit	Unit Wt(lbs)	Item Wt(lbs)
Drum plastic bag	1.000	EACH	1.000	1.000
55-GAL DRUM (17c)	1.000	EACH	59.000	59.000

Waste Items byWeight

Material Item	Quantity	Unit	Unit Wt(lbs)	Item Wt(lbs)

Batch Id RTR14-00233 **Container Id** 10342406 **Analysis Id** 0000100254

Waste Items by Volume

Material Item	Quantity	Unit	Unit Wt(lbs)	Item Wt(lbs)

Waste Parameters

Waste Parameter	Remaining Weight %	Actual Weight Lbs
Iron-based Metals/Alloys	0.000	0.000
Aluminum-based Metals/Alloys	0.000	0.000
Other metals	0.000	0.000
Other Inorganic Materials	0.000	0.000
Cellulosics	0.000	0.000
Rubber	0.000	0.000
Plastic (Waste Materials)	0.000	0.000
Inorganic matrix	0.000	0.000
Organic matrix	100.000	163.495
Soils/gravel	0.000	0.000
Steel (packaging materials)	0.000	142.000
Plastic (packaging materials)	0.000	1.000
Cellulosics Packaging	0.000	0.000
MLLW Waste	0.000	0.000

Analysis Esignature History

Esig Approval Id	User Id	Esignature Date	Comment
2815084	RBTHOMPSON	18-AUG-2014 10:13	
2809161	NKIRK	14-AUG-2014 07:36	This batch is promoted. ndk 8/14/14
2808384	MSORENSON	13-AUG-2014 08:07	rework
2807906	NKIRK	12-AUG-2014 13:16	This batch is returned for rework. AK does not concur with the recommended IDC change for containers: 10345547, 10342406, 10323336, 10313854, 10312438, 10312166, 10308495, 10308472, 10308221, 10308059, 10308033, 10305211, 10300329, 10291751 and 10291747. Ndk 8/12/14
2806592	FKUCK	10-AUG-2014 10:01	

Batch Id RTR14-00233 **Container Id** 10323336 **Analysis Id** 0000100256

Container Type C drum, 83 Gallon **Analysis Status** Pass

RTR Date 10-AUG-2014 10:27 **Gross Weight** 198.450 **Lbs.** **Net Weight** 54.450 **Lbs**

Equipment Z-213-101 **Waste Matrix Code** S5490 **IDC** SD-177 Pre-1980 INL-Exhumed SDA Heterogeneous Debris

Recording Id 1RTR14-00142 **Procedure Id** INST-OI-12 **Revision**

Is Test Pattern Resolution Ok? Yes **Start Side** A **Replicate** 54 **Approval Level** SPM

Audio Visual Ok? Yes **Operator** No **OIO** No

Result Comment FKUCK

Waste contains primarily towels, wipes and cloth coveralls.
AK does not concur with recommended IDC UN-00B but instead recommends IDC SD-177 for container 10323336 based on waste description and retrieval location. Ndk 8/12/14
Rework: Recommended an IDC of SD-177 per AK result comment. MS 08/13/2014
AK concurs with recommended IDC SD-177 for container 10323336. No NCR or AKR is required. Ndk 8/14/14

Package

IDC Correct Yes **Recommended IDC** SD-177 **Summary Category** S5000

Idc Change Reason Per AK

Rigid Liner Present? No **LinerType** NO LINER

Liner Punctured? N/A **Sharp Objects?** Yes

Liner Lid Present? No **Sharp Objects Are Protected?** Yes

Liner Lid Deformed? N/A **Layers Of Confinement** 3

Fill Factor 90

Bag Closure Method Twisted and Taped

Liquids

Liquid Present? Yes **Internal Container with Liquid** No

Internal Container with Liquid 0 pints **LA Candidate** No

Liquid Between Liner & Drum 0 pints **Containerized Liquid**

Total Liquid Amount .5 pints **Containerized Liquid Amt** 0 pints

Other Liquids .5 pints **Comment** 1/2 pint in bagging near the middle of the waste

Prohibited Liquids Present No **Comment**

Contents-Drum or Box

	Value	Comment		Value	Comment
Lead?	No		**Mercury Present?**	No	
Wet Cell Batteries?	No		**Explosives?**	No	
Prohibited Compressed Gases?	No		**PCBs Present?**	No	
Aerosol Cans?	No		**PCB Mass (lbs)**	0	
Non-Mixed Hazardous Waste Present?	No		**Sealed Containers Over 4L?**	No	

Non-Radionuclide Pyrophoric Materials Present? No

Waste exhibiting the characteristics of Ignitability, Corrosivity or Reactivity Present? No

Wastes Incompatible with backfill, seal and panel closure materials, container and packaging materials,shipping container or other wastes? No

Impenetrable Dense Objects? No

Waste Material Items

Packaging Materials

Material Item	Quantity	Unit	Unit Wt(lbs)	Item Wt(lbs)
Drum plastic bag	2.000	EACH	1.000	2.000
55-GAL DRUM (17c)	1.000	EACH	59.000	59.000

Waste Items byWeight

Material Item	Quantity	Unit	Unit Wt(lbs)	Item Wt(lbs)
metal debris	1.000	EACH	7.000	7.000
plastic waste	1.000	EACH	5.000	5.000
Plastic bag for waste	1.000	EACH	0.250	0.250

Batch Id RTR14-00233 **Container Id** 10323336 **Analysis Id** 0000100256

Waste Items by Volume

Material Item	Quantity	Unit	Unit Wt(lbs)	Item Wt(lbs)
Liquids for Other Inorganics	0.500	PINTS	1.000	0.500

Waste Parameters

Waste Parameter	Remaining Weight %	Actual Weight Lbs
Iron-based Metals/Alloys	0.000	7.000
Aluminum-based Metals/Alloys	0.000	0.000
Other metals	0.000	0.000
Other Inorganic Materials	0.000	0.500
Cellulosics	100.000	41.700
Rubber	0.000	0.000
Plastic (Waste Materials)	0.000	5.250
Inorganic matrix	0.000	0.000
Organic matrix	0.000	0.000
Soils/gravel	0.000	0.000
Steel (packaging materials)	0.000	142.000
Plastic (packaging materials)	0.000	2.000
Cellulosics Packaging	0.000	0.000
MLLW Waste	0.000	0.000

Analysis Esignature History

Esig Approval Id	User Id	Esignature Date	Comment
2809162	NKIRK	14-AUG-2014 07:36	This batch is promoted. ndk 8/14/14
2808383	MSORENSON	13-AUG-2014 08:07	rework
2807907	NKIRK	12-AUG-2014 13:16	This batch is returned for rework. AK does not concur with the recommended IDC change for containers: 10345547, 10342406, 10323336, 10313854, 10312438, 10312166, 10308495, 10308472, 10308221, 10308059, 10308033, 10305211, 10300329, 10291751 and 10291747. Ndk 8/12/14
2806627	FKUCK	10-AUG-2014 10:27	

Batch Id RTR14-00233 **Container Id** 10312438 **Analysis Id** 0000100257

Container Type C drum, 83 Gallon **Analysis Status** Pass

RTR Date 10-AUG-2014 10:49 **Gross Weight** 191.835 Lbs. **Net Weight** 47.835 Lbs

Equipment Z-213-101 **Waste Matrix Code** S5490 **IDC** SD-177 Pre-1980 INL-Exhumed SDA Heterogeneous Debris

Recording Id 1RTR14-00142 **Procedure Id** INST-OI-12 **Revision**

Is Test Pattern Resolution Ok? Yes **Start Side** A **Replicate** 54 **Approval Level** SPM

Audio Visual Ok? Yes **Operator** No **OIO** No

Result Comment

Waste contains primarily wood and cardboard.
AK does not concur with recommended IDC UN-00B but instead recommends IDC SD-177 for container 10312438 based on waste description and retrieval location. Ndk 8/12/14
Rework: Recommended an IDC of SD-177 per AK result comment. MS 08/13/2014
AK concurs with recommended IDC SD-177 for container 10312438. No NCR or AKR is required. Ndk 8/14/14

Package

IDC Correct Yes **Recommended IDC** SD-177 **Summary Category** S5000

Idc Change Reason Per AK

Rigid Liner Present? No **LinerType** NO LINER

Liner Punctured? N/A **Sharp Objects?** Yes

Liner Lid Present? No **Sharp Objects Are Protected?** Yes

Liner Lid Deformed? N/A **Layers Of Confinement** 3

Fill Factor 98

Bag Closure Method Twisted and Taped

Liquids

Liquid Present? No **Internal Container with Liquid** No

Internal Container with Liquid 0 pints **LA Candidate** No

Liquid Between Liner & Drum 0 pints **Containerized Liquid**

Total Liquid Amount 0 pints **Containerized Liquid Amt** 0 pints

Other Liquids 0 pints **Comment**

Prohibited Liquids Present No **Comment**

Contents-Drum or Box

	Value	Comment		Value	Comment
Lead?	Yes, Acceptable	lead tid's and shavings	**Mercury Present?**	No	
Wet Cell Batteries?	No		**Explosives?**	No	
Prohibited Compressed Gases?	Yes	Aerosol can on top of the waste	**PCBs Present?**	No	
Aerosol Cans?	Yes	Aerosol can on top of the waste	**PCB Mass (lbs)**	0	
Non-Mixed Hazardous Waste Present?	No		**Sealed Containers Over 4L?**	No	

Non-Radionuclide Pyrophoric Materials Present? No

Waste exhibiting the characteristics of Ignitability, Corrosivity or Reactivity Present? No

Wastes Incompatible with backfill, seal and panel closure materials, container and packaging materials,shipping container or other wastes? No

Impenetrable Dense Objects? No

Waste Material Items

Packaging Materials

Material Item	Quantity	Unit	Unit Wt(lbs)	Item Wt(lbs)
Drum plastic bag	2.000	EACH	1.000	2.000
55-GAL DRUM (17c)	1.000	EACH	59.000	59.000

Batch Id RTR14-00233 **Container Id** 10312438 **Analysis Id** 0000100257

Waste Items byWeight

Material Item	Quantity	Unit	Unit Wt(lbs)	Item Wt(lbs)
metal debris	1.000	EACH	10.000	10.000
plastic waste	1.000	EACH	5.000	5.000
lead tid's and shavings	1.000	EACH	1.000	1.000
Cardboard liner	1.000	EACH	4.000	4.000
Plastic bag for waste	1.000	EACH	0.250	0.250
Aerosol Can	1.000	EACH	0.240	0.240

Waste Items by Volume

Material Item	Quantity	Unit	Unit Wt(lbs)	Item Wt(lbs)
Oil-Dri (Inside 55 gal drum)	4.000	PINTS	0.420	1.680

Waste Parameters

Waste Parameter	Remaining Weight %	Actual Weight Lbs
Iron-based Metals/Alloys	0.000	10.240
Aluminum-based Metals/Alloys	0.000	0.000
Other metals	0.000	1.000
Other Inorganic Materials	0.000	1.680
Cellulosics	100.000	29.665
Rubber	0.000	0.000
Plastic (Waste Materials)	0.000	5.250
Inorganic matrix	0.000	0.000
Organic matrix	0.000	0.000
Soils/gravel	0.000	0.000
Steel (packaging materials)	0.000	142.000
Plastic (packaging materials)	0.000	2.000
Cellulosics Packaging	0.000	0.000
MLLW Waste	0.000	0.000

Analysis Esignature History

Esig Approval Id	User Id	Esignature Date	Comment
2809164	NKIRK	14-AUG-2014 07:36	This batch is promoted. ndk 8/14/14
2808380	MSORENSON	13-AUG-2014 08:05	rework
2807909	NKIRK	12-AUG-2014 13:16	This batch is returned for rework. AK does not concur with the recommended IDC change for containers: 10345547, 10342406, 10323336, 10313854, 10312438, 10312166, 10308495, 10308472, 10308221, 10308059, 10308033, 10305211, 10300329, 10291751 and 10291747. Ndk 8/12/14
2806655	FKUCK	10-AUG-2014 10:49	

Batch Id RTR14-00233 **Container Id** 10300329 **Analysis Id** 0000100259

Container Type C drum, 83 Gallon **Analysis Status** Pass

RTR Date 10-AUG-2014 11:51 **Gross Weight** 818.055 **Lbs.** **Net Weight** 675.055 **Lbs.**

Equipment Z-213-101 **Waste Matrix Code** S5490 **IDC** RF-750 Pits 11 & 12 Debris

Recording Id 1RTR14-00142 **Procedure Id** INST-OI-12 **Revision** 54 **Approval Level** SPM

Is Test Pattern Resolution Ok? Yes **Start Side** A **Replicate** No **OIO** No

Audio Visual Ok? Yes **Operator** FKUCK

Result Comment Waste contains large concrete core samples
AK does not concur with recommended IDC UN-00B but instead recommends IDC RF-750 for container 10300329 based on waste description and retrieval location. Ndk 8/12/14
Rework: Recommended an IDC of RF-750 per AK result comment. MS 08/13/2014
AK concurs with recommended IDC RF-750 for container 10300329. No NCR or AKR is required. Ndk 8/14/14

Package

IDC Correct Yes **Recommended IDC** RF-750 **Summary Category** S5000

Idc Change Reason Per AK

Rigid Liner Present? No **LinerType** NO LINER

Liner Punctured? N/A **Sharp Objects?** No

Liner Lid Present? No **Sharp Objects Are Protected?** Yes

Liner Lid Deformed? N/A **Layers Of Confinement** 1

Fill Factor 99

Bag Closure Method Twisted and Taped

Liquids

Liquid Present? No **Internal Container with Liquid** No

Internal Container with Liquid 0 pints **LA Candidate** No

Liquid Between Liner & Drum 0 pints **Containerized Liquid**

Total Liquid Amount 0 pints **Containerized Liquid Amt** 0 pints

Other Liquids 0 pints **Comment**

Prohibited Liquids Present No **Comment**

Contents-Drum or Box

	Value	Comment		Value	Comment
Lead?	No		**Mercury Present?**	No	
Wet Cell Batteries?	No		**Explosives?**	No	
Prohibited Compressed Gases?	No		**PCBs Present?**	No	
Aerosol Cans?	No		**PCB Mass (lbs)**	0	
Non-Mixed Hazardous Waste Present?	No		**Sealed Containers Over 4L?**	No	

Non-Radionuclide Pyrophoric Materials Present? No

Waste exhibiting the characteristics of Ignitability, Corrosivity or Reactivity Present? No

Wastes Incompatible with backfill, seal and panel closure materials, container and packaging materials,shipping container or other wastes? No

Impenetrable Dense Objects? Yes - Unacceptable concrete

Waste Material Items

Packaging Materials

Material Item	Quantity	Unit	Unit Wt(lbs)	Item Wt(lbs)
Drum plastic bag	1.000	EACH	1.000	1.000
55-GAL DRUM (17c)	1.000	EACH	59.000	59.000

Waste Items byWeight

Material Item	Quantity	Unit	Unit Wt(lbs)	Item Wt(lbs)
filters	2.000	EACH	3.000	6.000
Cardboard liner	1.000	EACH	4.000	4.000

Waste Items by Volume

Material Item	Quantity	Unit	Unit Wt(lbs)	Item Wt(lbs)

Batch Id RTR14-00233 **Container Id** 10300329 **Analysis Id** 0000100259

Waste Parameters

Waste Parameter	Remaining Weight %	Actual Weight Lbs
Iron-based Metals/Alloys	0.000	6.000
Aluminum-based Metals/Alloys	0.000	0.000
Other metals	0.000	0.000
Other Inorganic Materials	100.000	665.055
Cellulosics	0.000	4.000
Rubber	0.000	0.000
Plastic (Waste Materials)	0.000	0.000
Inorganic matrix	0.000	0.000
Organic matrix	0.000	0.000
Soils/gravel	0.000	0.000
Steel (packaging materials)	0.000	142.000
Plastic (packaging materials)	0.000	1.000
Cellulosics Packaging	0.000	0.000
MLLW Waste	0.000	0.000

Analysis Esignature History

Esig Approval Id	User Id	Esignature Date	Comment
2809172	NKIRK	14-AUG-2014 07:36	This batch is promoted. ndk 8/14/14
2808361	MSORENSON	13-AUG-2014 07:57	rework
2807918	NKIRK	12-AUG-2014 13:16	This batch is returned for rework. AK does not concur with the recommended IDC change for containers: 10345547, 10342406, 10323336, 10313854, 10312438, 10312166, 10308495, 10308472, 10308221, 10308059, 10308033, 10305211, 10300329, 10291751 and 10291747. Ndk 8/12/14
2806685	FKUCK	10-AUG-2014 11:51	

Batch Id RTR14-00233 **Container Id** 10502423 **Analysis Id** 0000100261

Container Type C drum, 83 Gallon **Analysis Status** Pass

RTR Date 10-AUG-2014 12:28 **Gross Weight** 357.210 **Lbs.** **Net Weight** 213.210 **Lbs.**

Equipment Z-213-101 **Waste Matrix Code** S3143 **IDC** RF-005 Evaporator Salts

Recording Id 1RTR14-00142 **Procedure Id** INST-OI-12 **Revision** 54 **Approval Level** SPM

Is Test Pattern Resolution Ok? Yes **Start Side** A **Replicate** No **OIO** No

Audio Visual Ok? Yes **Operator** KKEARN

Result Comment Waste consists of salt

Package

IDC Correct Yes **Recommended IDC** **Summary Category** S3000

Idc Change Reason

Rigid Liner Present? No **LinerType** NO LINER

Liner Punctured? N/A **Sharp Objects?** No

Liner Lid Present? No **Sharp Objects Are Protected?** Yes

Liner Lid Deformed? N/A **Layers Of Confinement** 2

Fill Factor 90

Bag Closure Method Twisted and Taped

Liquids

Liquid Present? No **Internal Container with Liquid** No

Internal Container with Liquid 0 pints **LA Candidate** No

Liquid Between Liner & Drum 0 pints **Containerized Liquid**

Total Liquid Amount 0 pints **Containerized Liquid Amt** 0 pints

Other Liquids 0 pints **Comment**

Prohibited Liquids Present No **Comment**

Contents-Drum or Box

	Value	Comment		Value	Comment
Lead?	No		**Mercury Present?**	No	
Wet Cell Batteries?	No		**Explosives?**	No	
Prohibited Compressed Gases?	No		**PCBs Present?**	No	
Aerosol Cans?	No		**PCB Mass (lbs)**	0	
Non-Mixed Hazardous Waste Present?	No		**Sealed Containers Over 4L?**	No	

Non-Radionuclide Pyrophoric Materials Present? No

Waste exhibiting the characteristics of Ignitability, Corrosivity or Reactivity Present? No

Wastes Incompatible with backfill, seal and panel closure materials, container and packaging materials,shipping container or other wastes? No

Impenetrable Dense Objects? No

Waste Material Items

Packaging Materials

Material Item	Quantity	Unit	Unit Wt(lbs)	Item Wt(lbs)
Drum plastic bag	2.000	EACH	1.000	2.000
55-GAL DRUM (17c)	1.000	EACH	59.000	59.000

Waste Items byWeight

Material Item	Quantity	Unit	Unit Wt(lbs)	Item Wt(lbs)

Waste Items by Volume

Material Item	Quantity	Unit	Unit Wt(lbs)	Item Wt(lbs)

Batch Id RTR14-00233 **Container Id** 10502423 **Analysis Id** 0000100261

Waste Parameters

Waste Parameter	Remaining Weight %	Actual Weight Lbs
Iron-based Metals/Alloys	0.000	0.000
Aluminum-based Metals/Alloys	0.000	0.000
Other metals	0.000	0.000
Other Inorganic Materials	100.000	213.210
Cellulosics	0.000	0.000
Rubber	0.000	0.000
Plastic (Waste Materials)	0.000	0.000
Inorganic matrix	0.000	0.000
Organic matrix	0.000	0.000
Soils/gravel	0.000	0.000
Steel (packaging materials)	0.000	142.000
Plastic (packaging materials)	0.000	2.000
Cellulosics Packaging	0.000	0.000
MLLW Waste	0.000	0.000

Analysis Esignature History

Esig Approval Id	User Id	Esignature Date	Comment
2806701	KKEARN	10-AUG-2014 12:28	

Batch Id RTR14-00233 **Container Id** 10308221 **Analysis Id** 0000100262

Container Type C drum, 83 Gallon **Analysis Status** Pass

RTR Date 10-AUG-2014 12:41 **Gross Weight** 178.605 Lbs. **Net Weight** 34.605 Lbs

Equipment Z-213-101 **Waste Matrix Code** S5490 **IDC** SD-177 Pre-1980 INL-Exhumed SDA Heterogeneous Debris

Recording Id 1RTR14-00142 **Procedure Id** INST-OI-12 **Revision**

Is Test Pattern Resolution Ok? Yes **Start Side** A **Replicate** 54 **Approval Level** SPM

Audio Visual Ok? Yes **Operator** No **OIO** No

KKEARN

Result Comment

Waste consists of wipes, rags, and coveralls
AK does not concur with recommended IDC UN-00B but instead recommends IDC SD-177 for container 10308221 based on waste description and retrieval location. Ndk 8/12/14
Rework: Recommended an IDC of SD-177 per AK result comment. MS 08/13/2014
AK concurs with recommended IDC SD-177 for container 10308221. No NCR or AKR is required. Ndk 8/14/14

Package

IDC Correct Yes **Recommended IDC** SD-177 **Summary Category** S5000

Idc Change Reason Per AK

Rigid Liner Present? No **LinerType** NO LINER

Liner Punctured? N/A **Sharp Objects?** No

Liner Lid Present? No **Sharp Objects Are Protected?** Yes

Liner Lid Deformed? N/A **Layers Of Confinement** 3

Fill Factor 80

Bag Closure Method Twisted and Taped

Liquids

Liquid Present? No **Internal Container with Liquid** No

Internal Container with Liquid 0 pints **LA Candidate** No

Liquid Between Liner & Drum 0 pints **Containerized Liquid**

Total Liquid Amount 0 pints **Containerized Liquid Amt** 0 pints

Other Liquids 0 pints **Comment**

Prohibited Liquids Present No **Comment**

Contents-Drum or Box

	Value	Comment		Value	Comment
Lead?	No		**Mercury Present?**	No	
Wet Cell Batteries?	No		**Explosives?**	No	
Prohibited Compressed Gases?	No		**PCBs Present?**	No	
Aerosol Cans?	No		**PCB Mass (lbs)**	0	
Non-Mixed Hazardous Waste Present?	No		**Sealed Containers Over 4L?**	No	

Non-Radionuclide Pyrophoric Materials Present? No

Waste exhibiting the characteristics of Ignitability, Corrosivity or Reactivity Present? No

Wastes Incompatible with backfill, seal and panel closure materials, container and packaging materials,shipping container or other wastes? No

Impenetrable Dense Objects? No

Waste Material Items

Packaging Materials

Material Item	Quantity	Unit	Unit Wt(lbs)	Item Wt(lbs)
Drum plastic bag	2.000	EACH	1.000	2.000
55-GAL DRUM (17c)	1.000	EACH	59.000	59.000

Waste Items byWeight

Material Item	Quantity	Unit	Unit Wt(lbs)	Item Wt(lbs)
scrap metal	1.000	EACH	2.000	2.000
respirators with cartridges	1.000	EACH	3.000	3.000
Plastic bag for waste	1.000	EACH	0.250	0.250
Poly bottles (1 gal)	1.000	EACH	1.000	1.000

Batch Id RTR14-00233 **Container Id** 10308221 **Analysis Id** 0000100262

Waste Items by Volume

Material Item	Quantity	Unit	Unit Wt(lbs)	Item Wt(lbs)

Waste Parameters

Waste Parameter	Remaining Weight %	Actual Weight Lbs
Iron-based Metals/Alloys	0.000	2.000
Aluminum-based Metals/Alloys	0.000	0.450
Other metals	0.000	0.000
Other Inorganic Materials	0.000	0.000
Cellulosics	100.000	28.505
Rubber	0.000	2.400
Plastic (Waste Materials)	0.000	1.250
Inorganic matrix	0.000	0.000
Organic matrix	0.000	0.000
Soils/gravel	0.000	0.000
Steel (packaging materials)	0.000	142.000
Plastic (packaging materials)	0.000	2.000
Cellulosics Packaging	0.000	0.000
MLLW Waste	0.000	0.000

Analysis Esignature History

Esig Approval Id	User Id	Esignature Date	Comment
2809168	NKIRK	14-AUG-2014 07:36	This batch is promoted. ndk 8/14/14
2808370	MSORENSON	13-AUG-2014 08:01	rework
2807914	NKIRK	12-AUG-2014 13:16	This batch is returned for rework. AK does not concur with the recommended IDC change for containers: 10345547, 10342406, 10323336, 10313854, 10312438, 10312166, 10308495, 10308472, 10308221, 10308059, 10308033, 10305211, 10300329, 10291751 and 10291747. Ndk 8/12/14
2806703	KKEARN	10-AUG-2014 12:41	

Batch Id RTR14-00233 **Container Id** 10308472 **Analysis Id** 0000100264

Container Type C drum, 83 Gallon **Analysis Status** Pass

RTR Date 10-AUG-2014 14:19 **Gross Weight** 198.450 **Lbs.** **Net Weight** 54.450 **Lbs**

Equipment Z-213-101 **Waste Matrix Code** S5490 **IDC** SD-177 Pre-1980 INL-Exhumed SDA Heterogeneous Debris

Recording Id 1RTR14-00142 **Procedure Id** INST-OI-12 **Revision** 54

Is Test Pattern Resolution Ok? Yes **Start Side** A **Replicate** No **Approval Level** SPM

Audio Visual Ok? Yes **Operator** KKEARN **OIO** No

Result Comment

Waste consists of plastic bags and PPE
AK does not concur with recommended IDC UN-00B but instead recommends IDC SD-177 for container 10308472 based on waste description and retrieval location. Ndk 8/12/14
Rework: Recommended an IDC of SD-177 per AK result comment. MS 08/13/2014
AK concurs with recommended IDC SD-177 for container 10308472. No NCR or AKR is required. Ndk 8/14/14

Package

IDC Correct Yes **Recommended IDC** SD-177 **Summary Category** S5000

Idc Change Reason Per AK

Rigid Liner Present? No **LinerType** NO LINER

Liner Punctured? N/A **Sharp Objects?** No

Liner Lid Present? No **Sharp Objects Are Protected?** Yes

Liner Lid Deformed? N/A **Layers Of Confinement** 3

Fill Factor 85

Bag Closure Method Twisted and Taped

Liquids

Liquid Present? No **Internal Container with Liquid** No

Internal Container with Liquid 0 pints **LA Candidate** No

Liquid Between Liner & Drum 0 pints **Containerized Liquid**

Total Liquid Amount 0 pints **Containerized Liquid Amt** 0 pints

Other Liquids 0 pints **Comment**

Prohibited Liquids Present No **Comment**

Contents-Drum or Box

	Value	Comment		Value	Comment
Lead?	Yes, Acceptable	lead gloves	**Mercury Present?**	No	
Wet Cell Batteries?	No		**Explosives?**	No	
Prohibited Compressed Gases?	No		**PCBs Present?**	No	
Aerosol Cans?	No		**PCB Mass (lbs)**	0	
Non-Mixed Hazardous Waste Present?	No		**Sealed Containers Over 4L?**	No	

Non-Radionuclide Pyrophoric Materials Present? No

Waste exhibiting the characteristics of Ignitability, Corrosivity or Reactivity Present? No

Wastes Incompatible with backfill, seal and panel closure materials, container and packaging materials,shipping container or other wastes? No

Impenetrable Dense Objects? No

Waste Material Items

Packaging Materials

Material Item	Quantity	Unit	Unit Wt(lbs)	Item Wt(lbs)
Drum plastic bag	2.000	EACH	1.000	2.000
55-GAL DRUM (17c)	1.000	EACH	59.000	59.000

Batch Id RTR14-00233 **Container Id** 10308472 **Analysis Id** 0000100264

Waste Items byWeight

Material Item	Quantity	Unit	Unit Wt(lbs)	Item Wt(lbs)
scrap metal	1.000	EACH	5.000	5.000
lead sheet	5.000	EACH	1.000	5.000
Fiber pack	2.000	EACH	6.000	12.000
Plastic bag for waste	3.000	EACH	0.250	0.750
Leaded rubber glove	3.000	EACH	5.500	16.500

Waste Items by Volume

Material Item	Quantity	Unit	Unit Wt(lbs)	Item Wt(lbs)

Waste Parameters

Waste Parameter	Remaining Weight %	Actual Weight Lbs
Iron-based Metals/Alloys	0.000	5.000
Aluminum-based Metals/Alloys	0.000	0.000
Other metals	0.000	5.000
Other Inorganic Materials	0.000	0.000
Cellulosics	0.000	12.000
Rubber	0.000	16.500
Plastic (Waste Materials)	100.000	15.950
Inorganic matrix	0.000	0.000
Organic matrix	0.000	0.000
Soils/gravel	0.000	0.000
Steel (packaging materials)	0.000	142.000
Plastic (packaging materials)	0.000	2.000
Cellulosics Packaging	0.000	0.000
MLLW Waste	0.000	0.000

Analysis Esignature History

Esig Approval Id	User Id	Esignature Date	Comment
2809167	NKIRK	14-AUG-2014 07:36	This batch is promoted. ndk 8/14/14
2808372	MSORENSON	13-AUG-2014 08:02	rework
2807913	NKIRK	12-AUG-2014 13:16	This batch is returned for rework. AK does not concur with the recommended IDC change for containers: 10345547, 10342406, 10323336, 10313854, 10312438, 10312166, 10308495, 10308472, 10308221, 10308059, 10308033, 10305211, 10300329, 10291751 and 10291747. Ndk 8/12/14
2806729	KKEARN	10-AUG-2014 14:20	

End of RTR Analysis Report

AMWTP

Advanced Mixed Waste Treatment Project

AMWTP

RTR Replicate Comparison Report

Date: 11-Sep-2014

Time: 08:19

RTR Batch Id: RTR14-00233 **Container Id:** 10526844 **Equipment Id:** Z-213-101

Container type Description: **85 Gallon Open Head drum, DOT 7A** Gen-IDC: **RF-002** Gross Weight(Lbs): **526.995**

	Original Analysis		Replicate Analysis	
Analysis Id / Date:	0000100235	09-AUG-2014 14:17	0000100243	09-AUG-2014 16:53
Procedure /Revision:	INST-OI-12	54	INST-OI-12	54
Recording Media Id:	1RTR14-00142		1RTR14-00142	
Starting Position:	A		A	
Is Test Pattern Resolution Ok?	Y		Y	
Audio Visual Ok?	Y		Y	
Personnel Name:	SAMUEL PHILLIPS		KENT KEARN	
IDC Ok? / Recommended IDC:	Y		Y	
IDC Change Reason:				
Summary Category / Waste matrix Code:	S3000	S3121	S3000	S3121
Packaging				
Rigid Liner Present?	N		N	
Liner Type Code:	NO LINER		NO LINER	
Liner Punctured:	NA		NA	
Liner Lid Deformed:	NA		NA	
Layers Of Confinement:	0		0	
Sharp Objects?	N		N	
Sharp Objects Protected?	Y		Y	
Fill Factor(%):	95		95	
Bag Closure Method:	No Bags		No Bags	
Liner Lid Present?:	N		N	
Liquids: (Volume in Pints)				
Liquid Present?	N		N	
Internal Container with Liquid?	0		0	
Containerized Liquid	N		N	
Other Liquids:	0		0	
Internal Container with Liquid Amt:	0		0	
Liquid Between Liner and Drum:	0		0	
Containerized Liquid:	0		0	
Total Liquid Amount:	0		0	
LA Candidate?	N		N	
Prohibited Liquids Present	N		N	

Contents:	Y/N	Comments	Y/N	Comments
Sealed Containers over 4L?	N		N	
Lead Present?	N		N	
Explosives Present?	N		N	
Mercury Present?	N		N	
Wet Cell Batteries Detected?	N		N	

RTR Replicate Comparison Report

RTR Batch Id: RTR14-00233 **Container Id:** 10526844 **Equipment Id:** Z-213-101

	Original Analysis	Replicate Analysis
Prohibited Compressed Gas Present?	N	N
PCBs Present?	N	N
PCB Mass (lbs)	0	0
Non-Radionuclide Pyrophoric Materials Present?	N	N
Waste exhibiting the characteristics of ignitability, Corrosivity or reactivity Present?	N	N
Non-Mixed Hazardous Waste Present?	N	N
Waste Incompatibles with backfill, Seal and panel closure materials, container and packaging material, shipping container or other wastes?	N	N
Impenetrable Dense Objects?	N	N
Result Comment:	This drum contains Sludge.	Waste consists of a sludge

E-signature

Esig Approval ID	User ID	Signature Date	Comment
2806725	SPHILLIPS	10-AUG-14	yep
2806726	KKEARN	10-AUG-14	ok

-----End of RTR Replicate Comparison Report-----

AMWTP
Advanced Mixed Waste Treatment Project

AMWTP

RTR OIO Comparison Report

Date: 11-Sep-2014

Time: 08:19

RTR Batch Id: RTR14-00233 **Container Id:** 10526846 **Equipment Id:** Z-213-101

Container type Description: **85 Gallon Open Head drum, DOT 7A** Gen-IDC: **RF-003** Gross Weight(Lbs): **551.25**

	Original Analysis		OIO Analysis	
Analysis Id / Date:	0000100241	09-AUG-2014 16:24	0000100245	09-AUG-2014 17:04
Procedure /Revision:	INST-OI-12	54	INST-OI-12	54
Recording Media Id:	1RTR14-00142		1RTR14-00142	
Starting Position:	A		A	
Is Test Pattern Resolution Ok?	Y		Y	
Audio Visual Ok?	Y		Y	
Personnel Name:	SAMUEL PHILLIPS		KENT KEARN	
IDC Ok? / Recommended IDC:	Y		Y	
IDC Change Reason:				
Summary Category / Waste matrix Code:	S3000	S3114	S3000	S3114
Packaging				
Rigid Liner Present?	N		N	
Liner Type Code:	NO LINER		NO LINER	
Liner Punctured:	NA		NA	
Liner Lid Deformed:	NA		NA	
Layers Of Confinement:	2		2	
Sharp Objects?	N		N	
Sharp Objects Protected?	Y		Y	
Fill Factor(%):	95		95	
Bag Closure Method:	Twisted and Taped		Twisted and Taped	
Liner Lid Present?:	N		N	
Liquids: (Volume in Pints)				
Liquid Present?	N		N	
Internal Container with Liquid?	0		0	
Containerized Liquid	N		N	
Other Liquids:	0		0	
Internal Container with Liquid Amt:	0		0	
Liquid Between Liner and Drum:	0		0	
Containerized Liquid:	0		0	
Total Liquid Amount:	0		0	
LA Candidate?	N		N	
Prohibited Liquids Present	N		N	

Contents:	Y/N	Comments	Y/N	Comments
Sealed Containers over 4L?	N		N	
Lead Present?	N		N	
Explosives Present?	N		N	
Mercury Present?	N		N	
Wet Cell Batteries Detected?	N		N	

AMWTP

Advanced Mixed Waste Treatment Project

AMWTP

RTR OIO Comparison Report

Date: 11-Sep-2014

Time: 08:19

RTR Batch Id: RTR14-00233 **Container Id:** 10526846 **Equipment Id:** Z-213-101

	Original Analysis		OIO Analysis	
Prohibited Compressed Gas Present?	N		N	
PCBs Present?	Y	PCB waste.	Y	RF-003
PCB Mass (lbs)	410.25		410.25	
Non-Radionuclide Pyrophoric Materials Present?	N		N	
Waste exhibiting the characteristics of ignitability, Corrosivity or reactivity Present?	N		N	
Non-Mixed Hazardous Waste Present?	N		N	
Waste Incompatibles with backfill, Seal and panel closure materials, container and packaging material, shipping container or other wastes?	N		N	
Impenetrable Dense Objects?	N		N	
Result Comment:	This drum contains sludge.		Waste consists of a sludge	

----------E-signature----------

Esig Approval ID	User ID	Signature Date	Comment
2806727	SPHILLIPS	10-AUG-14	yep
2806728	KKEARN	10-AUG-14	ok

-----End of RTR OIO Comparison Report-----

AMWTP Advanced Mixed Waste Treatment Project	Advanced Mixed Waste Treatment Project RE-QUALIFICATION PACKAGE Real-Time Radiography INFORMATION ONLY	RTR2 QPOT3A Rev. 13

Employee Name Danny Green S# 107612

REAL-TIME RADIOGRAPHY

Requalification Package Number: QPOT3A

The manager granting qualification acknowledges that the employee possesses the knowledge, skills, and abilities to perform this job function correctly the first time, safely and compliantly.

Qualification granted by:	C.A. Stepzinski		02/17/2014
Characterization and Storage Manager	Print Name	Signature	Date

Required Attachments: Check box if attached	Written Exam	Remedial Form (If used)	Exception Form (If used)
	☒	☐	☐

Form-1268, Production System Access Request, has been submitted for the appropriate WTS role(s) for this individual.	C.A. Stepzinski		02/17/2014
Title	Print Name	Signature	Date

Qual Pack Issued By :	Kathy Kenick		1-14-14
	Print Name	Signature	Date

QC 3/10/14 cg

Qualification Package Approval Section

Line Manager Approval	C. Stepzinski	Signature on File	5/8/13
	Print Name	Signature	Date

Training Manager Approval	Todd Golberg	Signature on File	5/10/13
	Print Name	Signature	Date

Employee Name Danny Green S# 107612

Revision History

Revision Number	Affected Pages	Description of Change	Date
1-7	All	No Record	
8	All	Issued to align with current initial qualification.	6/16/08
9	All	Updated format and incorporated evaluation standard.	9/8/09
10	Various	Added Safety Basis Related Items.	5/26/10
11	Various	Replaced language regarding Image Intensifier with Flat Panel detector due to an update to RTR equipment.	6/18/12
12	Various	Revise for DSA/TSR update removing RTR from DSA and TSRs.	8/17/12
13	All	Add new SS Evaluation section in section 7.0; add new OI-115 to required reads; added discussion elements for WIPP criteria on material parameters, packaging configurations, prohibited items, and weight and volume estimations.	5/10/13

Modification Record

Mod Letter	Affected Pages	Description of Change	Management Approval *	Date

* Manager signature required for modifications.

Employee Name Danny Green S# 107612

Signature Roster

Personnel signing blocks in this qualification package must print their name legibly, sign and initial. Signature by Evaluators indicates they have used the Training/Evaluation Standard and performed evaluations IAW MP-RTQP-14.13. Copy this sheet if necessary.

Name (Printed)	Signature	Initials
Kathy Merrill	Kathy Merrill	KM
Danny Green	Danny Green	DG
Sam Phillips	Sam Phillips	SP
Kurt Keeran	Kurt Keeran	KK
Frank Kuck	Frank Kuck	FK
Cameron Stamey	Cameron Stamey	CS
Steve Tallman	Steve Tallman	ST
C.A. Stepzinski	C.A. Stepzinski	CAS
Steve Massey	Steve Massey	SM

Employee Name Danny Green S# 107612

1.0 **Scope**
This qualification package was developed for the re-qualification of the Real-Time Radiography Operations (QPOT3A) in WMF-634/610 at the AMWTP. Qualification is valid for 24 months. The Technician may be disqualified for any of the following but not limited to: Medical reasons, failing re-qualification exam, job performance deficiency, performs work in an unsafe manner or expiration of qualification.

2.0 **Prerequisites**
Ensure the trainee has successfully completed the requirements listed below before completing this qualification package.
The Employee Position Description (EPD), Form1018 has been reviewed or a new one completed to ensure the duties of this position are included and to verify the education and experience requirements have been satisfied. (MP-RTQP-14.1). The employees Individual Training Plan (ITP), Form-1020, is current, or has been updated, to include the appropriate RCRA Profile and all courses required for Operations Technicians performing Real-Time Radiography operations. The ITP also includes the qualification checklists for all applicable equipment that will be used by operators in this job scope. The employee has completed all initial training *and is current* on the applicable qualifications / checklists listed on the ITP to support this qualification package. Employee's Production Manager — Date: 02/17/2014

	Date Requirement Was Completed	**Signature** (ISIH or SS)	**Date**
2.1 Current Visual Acuity Exam	7-8-13		1-14-14

Employee Name Danny Green S# 107612

3.0 Initial & Continuing Training / Knowledge / Required Reading

The initial training courses identified pertain to the job function/duties and will be verified complete by the employee's SS or a Training Representative.

3.1 Training Courses (Indicate Courses that are Recurring):	Date Requirement was Complete	Recurring Training /Qualification Frequency
3.1.1 0AWT1118, LLW/MLLW Disposition Program (CBT)	1-6-14	24 Months

Training Representative or SS verify initial training courses are complete:	Signature	Date
	[signature]	1-14-14

Sign-off by the OJT Instructor or SS indicates that each required reading has been reviewed IAW with the Training/Evaluation Standard and that the Trainee demonstrates a satisfactory understanding of how it pertains to their job responsibilities

3.2 Required Reading: Operating Instructions	OJT Instructor / SS Signature	Date
3.2.1 INST-OI-115, Real Time Radiography Unit Operations (WMF-634)	[signature]	2/09/14

3.3 Required Reading: Other Documents	OJT Instructor / SS Signature	Date
3.3.1 None	NA	NA

Employee Name Danny Green S# 107612

Sign-off by the OJT Instructor or SS indicates that each knowledge item has been reviewed IAW with the Training/Evaluation Standard and that the Trainee demonstrates a satisfactory understanding of how it pertains to their job responsibilities

3.4 Knowledge:	OJT Instructor / SS Signature	Date
3.4.1 Safety Basis (DSA, TSR, USQ, SER) • ANSI N43.3 Requirements		02/17/2014
3.4.2 Criticality Working Requirements (CWRs)		2/09/14
3.4.3 Applicability, Condition, Action(s) for RTR System and associated surveillance(s)		2/09/14

4.0 OJT Training Objectives

The elements below are to be performed (P), simulated (S), or discussed (D) as indicated. If there are two or more choices (P, S, or D), then circle which one was used.

Initials by the OJT indicate that the Trainee is ready to be evaluated per MP-RTQP-14.13. Each training objective has been reviewed IAW with the Training/Evaluation Standard and the Trainee has a satisfactory understanding of how it pertains to his/her job responsibilities. It is noted that a successful practice cannot count as a successful OJT evaluation.

Sign-off by the evaluator indicates successful performance of the task. If the trainee cannot perform the task without coaching, terminate the Performance Assessment.

	P S D	Evaluator Signature & date
4.1 Basic Principles		
4.1.1 Inspect RTR for operability.	(P)/S	2/09/14
4.2 Quality Control		
4.2.1 State the requirements and frequency for verifying the image quality through viewing an Image Test pattern.	(D)	2/09/14
4.2.2 State the requirements and frequency for performing the independent replicate scan.	(D)	2/09/14

Employee Name Danny Green S# 107612

4.2.3 State the requirements and frequency for performing the independent observation.	D	2/9/14
4.2.4 Describe the requirements for a batch size.	D	2/9/14
4.2.5 State the requirements for performance of test and training drums and the frequency in which they must be done.	D	2/9/14
4.2 **WIPP Criteria**		
4.2.1 Discuss the material parameter data in relation to RTR operations.	D	2/9/14
4.2.1 Discuss the packaging configurations found in RTR operations.	D	2/9/14
4.2.1 Discuss WIPP prohibited items.	D	2/9/14
4.2.1 Discuss weight and volume estimations used for RTR operations.	D	2/9/14
4.3 Safety Basis/Technical Safety Requirements		
4.3.1 Discuss the ANSI required safety checks.	D	2/9/14
4.3.2 Perform RTR Daily safety checks (RTR 101/106).	P	2/9/14
4.3.3 Perform RTR semi-annual interlocks surveillance (RTR 101/106).	P S	2/9/14
4.3.4 Verify completion of RTR semi-annual shielding surveillance (RTR 101/106).	P	2/9/14
4.3.5 Perform RTR Daily Safety checks (RTR 1001).	P	02/15/14
4.3.6 Perform RTR semi-annual interlock surveillance (RTR 1001).	P S	02/15/14
4.3.7 Verify completion of RTR semi-annual shielding surveillance (RTR 1001).	P	02/15/14

Employee Name Danny Green S# 107612

4.3.8 Simulate or discuss required action(s) upon failure to meet ANSIN43.3 Requirements	S (D)	2/9/14
4.3.9 Discuss the basic scenario description for the Accidents for RTR.	(D)	2/9/14
4.3.10 Locate and describe the safety functions of the Safety Components for RTR system 101/106 and 1001.	(P)	2/9/14

5.0 *Emergency / Abnormal Conditions*

The elements below are to be simulated (S) or discussed (D) as indicated. If both S and D are indicated, then circle which one was used.

Sign-off by the evaluator indicates successful performance of the task. Each training objective has been reviewed IAW with the Training/Evaluation Standard and the Trainee has a satisfactory understanding of how it pertains to his/her job responsibilities. If the trainee cannot perform the task without coaching, terminate the Performance Assessment.

	P S D	Evaluator Signature	Date
5.1 Fire / Alarm (INST-OI-12, INST-OI-26)	S (D)		2/09/14
5.3 Dropped waste container (INST-OI-11)	S (D)		2/09/14
5.4 Breached Container (INST-OI-11, INST-OI-84)	S (D)		2/09/14
5.5 CAM Alarm (INST-OI-11, INST-OI-12)	S (D)		2/09/14
5.6 Spill / Contamination Release (INST-OI-88, MP-EC&P-7.10)	S (D)		2/09/14
5.7 Injured Person (0AWT2402, 0AWT2521)	S (D)		2/09/14
5.8 Loss of ventilation/air system (INST-OI-12, INST-OI-33)	S (D)		2/09/14
5.9 Loss of Commercial Power (INST-OI-12, INST-OI-26)	S (D)		2/09/14
5.10 Evacuation (T2402)	S (D)		2/09/14

Employee Name Danny Green S# 107612

	P S D	Evaluator Signature	Date
5.11 Take Cover (T2402)	S D	Dan Shelli	2/09/14
5.12 X-ray fails to energize (INST-OI-12)	S D	Dan Shelli	2/09/14
5.13 X-ray fails to de-energize (INST-OI-12)	S D	Dan Shelli	2/09/14

6.0 **Examinations** (Sections 1-5 must be complete prior to testing)

Written Exam (80% required to pass)

Exam #: 1 Score: 97%

(If first exam is failed the supervisor must assign remedial training)

Form-1039 attached ☐ (check box when completed form-1039 is attached)

Re-exam # N/A Score: N/A (N/A if first exam is passed with 80% or greater)

Exam Passed	Cameron Stamos Exam Proctor Signature	2-17-14 Date

Verify that biannual QAPjP container evaluation has been performed or is current	Stu Todd RTR SME Signature	2/17/14 Date

Employee Name Danny Green S# 107612

7.0 **Shift Supervisor Evaluation**		
The Shift Supervisor will discuss the following elements with the candidate to determine if the candidate possesses the knowledge, skills, and abilities to perform this job function correctly the first time, safely and compliantly.		
Note: All lines must be completed for qualification completion.	**Shift Supervisor Signature**	**Date**
7.1 Discuss three elements from section 3.4 of this qual. package and document those elements here: 1. 3.4.1 DSA / ANSI 2. 3.4.2 CWRS 3. 3.4.3 RTR system + associated surveillances	WS Mag	02/23/14
7.2 Discuss five elements from section 4.0 of this qual. Package and document those elements here: 1. 4.1.2 QA - IQI, QTO + rep. 2. 4.2.5 QAPJP requirements 3. 4.3.1 ANCF safety checks 4. 4.3.4, 4.3.3 - semi annual checks 5. 4.3.5 RTR Daily safety checks	WS Mag	02/23/14

Employee Name Danny Green S# 107612

7.3	Discuss five elements from section 5.0 of this qual. Package and document those elements here: 1. 5.3. Dropped Waste Container 2. 5.4 Breached Container 3. 5.5 CAM alarm 4. 5.10 EVACUATION 5. 5.13 xray fails to deenergize	WDMs	02/23/14
7.4	List any five performance objectives you have observed this operator perform during the qualification/requalification process. 1. performance of daily inspection 2. running IQI 3. 4.3.7 verify completion of RTR semiannual shielding surveillance 4. 4.3.4 verify completion of RTR interlock checks 5. 4.3.5 perform 1001 Daily safety checks	WDMs	02/23/14

Employee Name Danny Green S# 107612

Recommendation for Qualification		
After discussion and observation with/of the candidate concerning this job scope, the Shift Supervisor acknowledges that the trainee possesses the knowledge, skills, and abilities to perform this job function correctly the first time, safely and compliantly. In addition, the SS has completed the quality validation of this document in accordance with the requirements in MP-DOCS-18.2.		
Shift Supervisor		02/23/14
Title	Signature	Date

Upon satisfactory completion of this qualification checklist, the Characterization Manager may grant Qualification to the trainee on the front cover of this qualification checklist.

INFORMATION ONLY

AMWTP Advanced Mixed Waste Treatment Project	Advanced Mixed Waste Treatment Project RTR Bi Annual Container Test Container# 5	AFRTRDRU Rev.1

Employee Name: Danny Green **S#:** 107612

1.0 Scope

This administration form has been developed in order to document the training and knowledge of those individuals assigned to RTR Operations and Level I Validation (who maintain an RTR qualification). The examination of a QAPjP test container is a requirement of the WIPP WAC. The RTR Operator must identify all of the below items, and any prohibited items as defined by the WIPP WAC. Checking/marking the SAT column indicates satisfactory location and identification of the item.

Gross weight: 200 Score: Pass

Item/Description	SAT	Comments
1. Punctured aerosol can	✓	punctured
2. Pigtails on poly liners (horsetail bag)	✓	twisted / taped 2 Drum bags
3. Pair of coveralls	✓	Zipper
4. Empty bottle	✓	small
5. Irregular shaped pieces of wood	X	2x4s
6. Empty one-gallon paint can	✓	
7. Full container	✓	1 pt liquid
8. Aerosol can with fluid	✓	pressurized - 1 cup liquid
9. One-gallon bottle with three tablespoons of fluid	✓	.09 pts liquid
10. One-gallon bottle with one cup of fluid (upside down)	✓	1/2 cup
11. Leaded glove or leaded apron	✓	empty
12. Wrench / tools	✓	Wrenches

Waste Description:	Weight:
poly bags respirator, tubing, sheeting, metal fittings	CPR - 60 lbs
Waste Description: piping, small Volrath can w/ crucibles, lead taped	Weight: Metal - 80 lbs
Waste Description: (empty), poly bottles, plastic lab ware beakers,	Weight: glass - 60 lbs
Waste Description: 2 bottles w/ liquid, 1 cup, and .09 pt, square tubing,	Weight:
Waste Description: angle iron, C clamp, tantalum molds, roll of tape	Weight:

Results have been reviewed with Candidate by SME:

SME Sig and Date: Stan Tall 4/29/14 Candidate Sig and Date: 04/29/14

type 4 90 mil liner, vented

TRAINING DEPT. MAY 05 2014

Initials: AB

INFORMATION ONLY

AMWTP Advanced Mixed Waste Treatment Project	Advanced Mixed Waste Treatment Project RTR Bi Annual Container Test Container# 3	AFRTRDRU Rev.1

Employee Name: Danny Green **S#:** 107612

1.0 Scope

This administration form has been developed in order to document the training and knowledge of those individuals assigned to RTR Operations and Level I Validation (who maintain an RTR qualification). The examination of a QAPjP test container is a requirement of the WIPP WAC. The RTR Operator must identify all of the below items, and any prohibited items as defined by the WIPP WAC. Checking/marking the SAT column indicates satisfactory location and identification of the item.

Gross weight: 370 Score: Pass

Item/Description	SAT	Comments
1. Punctured aerosol can	✓	punctured
2. Pigtails on poly liners (horsetail bag)	✓	(2)
3. Pair of coveralls	✓	Zipper
4. Empty bottle	✓	
5. Irregular shaped pieces of wood	✓	
6. Empty one-gallon paint can	✓	empty.
7. Full container	✓	1 pt liquid
8. Aerosol can with fluid	✓	unvented - 3/4 pt
9. One-gallon bottle with three tablespoons of fluid	✓	.13 pts
10. One-gallon bottle with one cup of fluid (upside down)	✓	1 Cup liquid
11. Leaded glove or leaded apron	✓	penetrated
12. Wrench / tools	✓	crescent wrench, pliers, screwdrivers

Waste Description: plastic bags, paper/rags	Weight: 75	plastic
Waste Description: electrical component	Weight: 20	metal
Waste Description: bricks, raschig rings, graphite	Weight: 80	OFM
Waste Description: Sludge	Weight: 125	sludge
Waste Description:	Weight:	

300 lbs net weight

Results have been reviewed with Candidate by SME:

SME Sig and Date: Steve Tall 11/18/13 Candidate Sig and Date: 11/18/13

type 4 90 mil liner, vented - FF 95%

TRAINING DEPT.

NOV 20 2013

Q.C 11/25/13

Initials: JH

AMWTP Advanced Mixed Waste Treatment Project	*Advanced Mixed Waste Treatment Project* *RE-QUALIFICATION PACKAGE* *Real-Time Radiography* **INFORMATION ONLY**	QPOT3A Rev. 12

Employee Name Frank Kuck S# 85521

REAL-TIME RADIOGRAPHY

Requalification Package Number: QPOT3A

The manager granting qualification acknowledges that the employee possesses the knowledge, skills, and abilities to perform this job function correctly the first time, safely and compliantly.

Qualification granted by:	Jeremy Szabo		05/21/13
Characterization and Storage Manager	Print Name	Signature	Date

Required Attachments: Check box if attached	Written Exam ☐	Remedial Form ☐ (If used)	Exception Form ☐ (If used)

Form-1268, Production System Access Request, has been submitted for the appropriate WTS role(s) for this individual.	C. A. Stepzinski		05/21/13
Title	Print Name	Signature	Date

Qual Pack Issued By :	Cameron Shaw		4-4-13
	Print Name	Signature	Date

Qualification Package Approval Section

Line Manager Approval	C. Stepzinski	Signature on File	8/16/12
	Print Name	Signature	Date

Training Manager Approval	Todd Golberg	Signature on File	08/17/12
	Print Name	Signature	Date

MAY 28 2013

Employee Name Frank Kuck S# 85521

Revision History

Revision Number	Affected Pages	Description of Change	Date
1-7	All	No Record	
8	All	Issued to align with current initial qualification.	6/16/08
9	All	Updated format and incorporated evaluation standard.	9/8/09
10	Various	Added Safety Basis Related Items.	5/26/10
11	Various	Replaced language regarding Image Intensifier with Flat Panel detector due to an update to RTR equipment.	6/18/12
12	Various	Revise for DSA/TSR update removing RTR from DSA and TSRs.	8/17/12

Modification Record

Mod Letter	Affected Pages	Description of Change	Management Approval *	Date
12A	5	Delete items 3.1.2 and 3.1.3 due to changes in DSA.	C. Stepzinski (Signature on File)	9/5/12

* Manager signature required for modifications.

Employee Name Frank Kuck 7 S# 85521

Signature Roster

Personnel signing blocks in this qualification package must print their name legibly, sign and initial. Signature by Evaluators indicates they have used the Training/Evaluation Standard and performed evaluations IAW MP-RTQP-14.13. Copy this sheet if necessary.

Name (Printed)	Signature	Initials
Cameron Stamos		
Jeremy Szabo		
Seth Oldham		
Steve Tallman		
Danny Green		
P. Risatti		
Steve Massey		
C.A. Stepzinski		

Employee Name Frank Kuck S# 85521

1.0 Scope

This qualification package was developed for the re-qualification of the Real-Time Radiography Operations (QPOT3A) in WMF-634/610 at the AMWTP.

The operator will be qualified for 2 years.

The Technician may be disqualified because of, but not limited to Medical reasons, failing re-qualification exam, job performance deficiency, performs work in an unsafe manner or expiration of qualification

2.0 Prerequisites

Ensure the trainee has successfully completed the requirements listed below before completing this qualification package.

The Employee Position Description (EPD), Form1018 has been reviewed or a new one completed to ensure the duties of this position are included and to verify the education and experience requirements have been satisfied. (MP-RTQP-14.1).

The employees Individual Training Plan (ITP), Form-1020, is current, or has been updated, to include the appropriate RCRA Profile and all courses required for Operations Technicians performing Real-Time Radiography operations.

The ITP also includes the qualification checklists for all applicable equipment that will be used by operators in this job scope.

The employee has completed all initial training *and is current* on the applicable qualifications / checklists listed on the ITP to support this qualification package.

Employee's Production Manager — Date: 05/02/13

	Date Requirement Was Completed	**Signature** (ISIH or SS)	**Date**
2.1 Current Visual Acuity Exam	01/03/13	WS May	05/21/13

Employee Name Frank Kuck S# 85521

3.0 Initial & Continuing Training / Knowledge / Required Reading

The initial training courses identified pertain to the job function/duties and will be verified complete by the employee's SS or a Training Representative.

3.1 Training Courses (Indicate Courses that are Recurring):	Date Requirement was Complete	Recurring Training /Qualification Frequency
3.1.1 0AWT1118, LLW/MLLW Disposition Program (CBT)	1-17-12	24 Months
3.1.2 0AWT 2375, Safety Basis Continuing Training for Non-Facility Ops	N/A	24 Months
3.1.3 0AWT 2369 RTR ANSI Safety Requirements	N/A	24 Months

Mod 12A

Training Representative or SS verify initial training courses are complete:	CStamey Signature	4-4-13 Date

Sign-off by the OJT Instructor or SS indicates that each required reading has been reviewed IAW with the Training/Evaluation Standard and that the Trainee demonstrates a satisfactory understanding of how it pertains to their job responsibilities

3.2 Required Reading: Operating Instructions	OJT Instructor / SS Signature	Date
3.2.1 None	NA	NA

3.3 Required Reading: Other Documents	OJT Instructor / SS Signature	Date
3.3.1 None	NA	NA

Employee Name Frank Kuch S# 85531

Sign-off by the OJT Instructor or SS indicates that each knowledge item has been reviewed IAW with the Training/Evaluation Standard and that the Trainee demonstrates a satisfactory understanding of how it pertains to their job responsibilities

3.4 Knowledge:	OJT Instructor / SS Signature	Date
3.4.1 Safety Basis (DSA, TSR, USQ, SER) • ANSI N43.3 Requirements		05/21/13
3.4.2 Criticality Working Requirements (CWRs)		05/21/13
3.4.3 Applicability, Condition, Action(s) for RTR System and associated surveillance(s)		05/21/13

4.0 OJT Training Objectives

The elements below are to be performed (P), simulated (S), or discussed (D) as indicated. If there are two or more choices (P, S, or D), then circle which one was used.

Initials by the OJT indicate that the Trainee is ready to be evaluated per MP-RTQP-14.13. Each training objective has been reviewed IAW with the Training/Evaluation Standard and the Trainee has a satisfactory understanding of how it pertains to his/her job responsibilities. It is noted that a successful practice cannot count as a successful OJT evaluation.

Sign-off by the evaluator indicates successful performance of the task. If the trainee cannot perform the task without coaching, terminate the Performance Assessment.

	P S D	Evaluator Signature & date
4.1 Basic Principles		
4.1.1 Inspect RTR for operability.	P (S)	05/21/13
4.2 Quality Control		
4.2.1 State the requirements and frequency for verifying the image quality through viewing an Image Test pattern.	(D)	E. Seth Oldham 05/02/13
4.2.2 State the requirements and frequency for performing the independent replicate scan.	(D)	E. Seth Oldham 05/02/13

Employee Name Frank Kuck S# 85521

4.2.3 State the requirements and frequency for performing the independent observation.	D	E. Seth Oldham 05/02/13
4.2.4 Describe the requirements for a batch size.	D	E. Seth Oldham 05/02/13
4.2.5 State the requirements for performance of test and training drums and the frequency in which they must be done.	D	E. Seth Oldham 05/02/13
4.3 Safety Basis/Technical Safety Requirements		
4.3.1 Discuss the ANSI required safety checks.	D	E. Seth Oldham 05/02/13
4.3.2 Perform RTR Daily safety checks (RTR 101/106)	P	05/13/13
4.3.3 Perform RTR semi-annual interlocks surveillance (RTR 101/106)	P S	05/13/13
4.3.4 Verify completion of RTR semi-annual shielding surveillance (RTR 101/106)	P	05/21/13
4.3.5 Perform RTR Daily Safety checks (RTR 1001)	P	05/21/13
4.3.6 Perform RTR semi-annual interlock surveillance (RTR 1001)	P S	05/21/13
4.3.7 Verify completion of RTR semi-annual shielding surveillance (RTR 1001).	P	05/21/13
4.3.8 Simulate or discuss required action(s) upon failure to meet ANSIN43.3 Requirements	S D	E. Seth Oldham 05/02/13
4.3.9 Discuss the basic scenario description for the Accidents for RTR.	D	05/21/13
4.3.10 Locate and describe the safety functions of the Safety Components for RTR system 101/106 and 1001.	P	05/21/13

Employee Name Frank Kuck S# 85521

5.0 **Emergency / Abnormal Conditions**
The elements below are to be simulated (S) or discussed (D) as indicated. If both S and D are indicated, then circle which one was used. Sign-off by the evaluator indicates successful performance of the task. Each training objective has been reviewed IAW with the Training/Evaluation Standard and the Trainee has a satisfactory understanding of how it pertains to his/her job responsibilities. If the trainee cannot perform the task without coaching, terminate the Performance Assessment.

	PSD	Evaluator Signature	Date
5.1 Fire / Alarm (INST-OI-12, INST-OI-26)	S (D)		05/21/13
5.2 Location of fire extinguishers / fire alarm boxes	S (D)		05/21/13
5.3 Dropped waste container (INST-OI-11)	S (D)		05/21/13
5.4 Breached Container (INST-OI-11, INST-OI-84)	S (D)		05/21/13
5.5 CAM Alarm (INST-OI-11, INST-OI-12)	S (D)		05/21/13
5.6 Spill / Contamination Release (INST-OI-88, MP-EC&P-7.10)	S (D)		05/21/13
5.7 Injured Person (0AWT2402, 0AWT2521)	S (D)		05/21/13
5.8 Loss of ventilation/air system (INST-OI-12, INST-OI-33)	S (D)		05/21/13
5.9 Loss of Commercial Power (INST-OI-12, INST-OI-26)	S (D)		05/21/13
5.10 Evacuation (T2402)	S (D)		05/21/13
5.11 Take Cover (T2402)	S (D)		05/21/13
5.12 X-ray fails to energize (INST-OI-12)	S (D)		05/21/13
5.13 X-ray fails to de-energize (INST-OI-12)	S (D)		05/21/13

AMWTP Advanced Mixed Waste Treatment Project	*Advanced Mixed Waste Treatment Project* *RE-QUALIFICATION PACKAGE* *Real-Time Radiography*	QPOT3A Rev. 12

Employee Name Frank Kuck S# 85521

6.0 **Examinations** (Sections 1-5 must be complete prior to testing)		
Written Exam (80% required to pass) Exam #: 2 Score: 88% *(If first exam is failed the supervisor must assign remedial training)* Form-1039 attached ☐ (check box when completed form-1039 is attached) Re-exam # _____ Score:_____ (N/A if first exam is passed with 80% or greater)		
Exam Passed	FPDRCC Exam Proctor Signature	5/21/13 Date

Verify that biannual QAPjP container evaluation has been performed or is current	Steve Todd RTR SME Signature	5/3/13 Date

7.0 **Recommendation for Qualification**		
After discussion with the candidate concerning this job scope, the Shift Supervisor (SS) acknowledges that the trainee possesses the knowledge, skills, and abilities to perform this job function correctly the first time, safely and compliantly. In addition, the SS has completed the quality validation of this document in accordance with the requirements in MP-DOCS-18.2. (Guidance is given in the Training/Evaluation Standard)		
SS Title	WO Mgr Signature	05/21/13 Date

Upon satisfactory completion of this qualification package, the Characterization Production Manager may grant Qualification to the trainee on the front cover of this qualification package.

INFORMATION ONLY

AMWTP Advanced Mixed Waste Treatment Project	*Advanced Mixed Waste Treatment Project* ***RTR Bi Annual Container*** ***Test Container# 5***	AFRTRDRU Rev.1

Employee Name: Frank Kuck **S#:** 85521

1.0 Scope

This administration form has been developed in order to document the training and knowledge of those individuals assigned to RTR Operations and Level I Validation (who maintain an RTR qualification). The examination of a QAPjP test container is a requirement of the WIPP WAC. The RTR Operator must identify all of the below items, and any prohibited items as defined by the WIPP WAC. Checking/marking the SAT column indicates satisfactory location and identification of the item.

Gross weight: 200 Score: Pass

Item/Description	SAT	Comments
1. Punctured aerosol can	✓	hole-punctured
2. Pigtails on poly liners (horsetail bag)	✓	(2) Drum bags
3. Pair of coveralls	✓	coveralls
4. Empty bottle	✓	1 liter-empty
5. Irregular shaped pieces of wood	✓	blocks
6. Empty one-gallon paint can	✓	
7. Full container	✓	full- 1 pint
8. Aerosol can with fluid	✓	1 cup liquid
9. One-gallon bottle with three tablespoons of fluid	✓	1/4 cup
10. One-gallon bottle with one cup of fluid (upside down)	✓	liquid - 1/2 ~~cup~~ ST 1 Cup
11. Leaded glove or leaded apron	✓	
12. Wrench / tools	✓	2 wrenches

Waste Description: multiple horsetails, respirator, poly tubing, sheeting	Weight: Plastics - 50
Waste Description: disc, pipe, plywood, leaded, tm, poly bottle w/rath w/ rags chgs	Weight: Metal - 70
Waste Description: rings, poly bottles, lab ware glass, bottle w liquid - 1pt	Weight: other metal - 50
Waste Description: dense items, piping, tools - C Clamp - tantalum	Weight: glass - 20
Waste Description: molds	Weight:

Results have been reviewed with Candidate by SME:

SME Sig and Date: Steve Tall 4/29/14 Candidate Sig and Date: Frank Kuck 04/29/14

type 4 90 mil liner

TRAINING DEPT.
MAY 05 2014

Initials: AB

INFORMATION ONLY

AMWTP Advanced Mixed Waste Treatment Project	*Advanced Mixed Waste Treatment Project* *RTR Bi Annual Container* *Test Container#* 5	AFRTRDRU Rev.1

Employee Name: Frank Kuck **S#:** 85521

1.0 Scope

This administration form has been developed in order to document the training and knowledge of those individuals assigned to RTR Operations and Level I Validation (who maintain an RTR qualification). The examination of a QAPjP test container is a requirement of the WIPP WAC. The RTR Operator must identify all of the below items, and any prohibited items as defined by the WIPP WAC. Checking/marking the SAT column indicates satisfactory location and identification of the item.

Gross weight: 370 lbs Score: Pass

Item/Description	SAT	Comments
1. Punctured aerosol can	✓	punctured
2. Pigtails on poly liners (horsetail bag)	✓	(2)
3. Pair of coveralls	✓	Zipper ✓ TRAINING DEPT. DEC 09 2013 Initials: CJ
4. Empty bottle	✓	empty
5. Irregular shaped pieces of wood	✓	
6. Empty one-gallon paint can	✓	
7. Full container	✓	1 pt- full
8. Aerosol can with fluid	✓	1 1/2 cups
9. One-gallon bottle with three tablespoons of fluid	✓	3 TBSP
10. One-gallon bottle with one cup of fluid (upside down)	✓	1/2 cup
11. Leaded glove or leaded apron	✓	verified empty
12. Wrench / tools	✓	wrench, screwdriver, pliers

Waste Description: small horsetails fiberboard disc, plastic waste	Weight: 15
Waste Description: metal- elect. box	Weight: 10
Waste Description: absorbent, graphite, cinder block, rasching rings	Weight: 30
Waste Description: sludge	Weight: *245
Waste Description:	Weight:

Plastic
Metal
OF M
sludge

Results have been reviewed with Candidate by SME:

SME Sig and Date: Steve Tull 12/5/13 Candidate Sig and Date: Frank Kuck 12/05/13

~~Net weight~~ 300 lbs

type 4 90 mil liner

* discussed wts after review, added 100 lbs to Sludge

Table C6-4 Visual Examination (VE) Checklist
AMWTP Recertification Audit A-15-01
October 7 – 9, 2014

(This page intentionally blank)

Visual Examination (VE) Checklist

	WAP Requirement[1] AMWTP Recertification Audit A-15-01 Table C6-4 Visual Examination (VE) Checklist	Procedure Documented		Example of Implementation/ Objective Evidence, as applicable		Comment (e.g., any change in procedure since last audit, etc.)
		Location	Adequate? Y/N (Why)	Item Reviewed	Adequate? Y/N	
	TRAINING					
296	Is there documentation which shows that a standardized training program for visual examination operators has been developed? Is it specific to the site and include the various waste configurations generated/stored at the site? (Section C1-2)	MP-TRUW-8.1 Appendix G, S. G.2 MP-RTQP-14.4 (All)	Y	Training and Qualification Records for VE Operators **(VE-2)**	Y	
297	Is there documentation which shows that the visual examination operators receive training on the specific waste generating processes, typical packaging configurations, and waste material parameters expected to be found in each Waste Matrix Code at the site? (Section C1-2)	MP-TRUW-8.1 Appendix G, S. G.2 MP-RTQP-14.4 (All)	Y	Training and Qualification Records for VE Operators **(VE-2)**	Y	
298	Are the visual examination personnel requalified once every two years? (Section C1-2)	MP-TRUW-8.1 Appendix G, S. G.2 MP-RTQP-14.4 (All)	Y	Training and Qualification Records for VE Operators **(VE-2)**	Y	
298a	Does the training include the following regardless of Summary Category Group? • Identifying and describing the contents of a waste container by examining all items in waste containers of previously packaged waste. • Identifying when VE cannot be used to meet the DQOs. (Section C1-2)	MP-TRUW-8.1 Appendix G, S. G.2 MP-RTQP-14.4 (All)	Y	Training and Qualification Records for VE Operators **(VE-2)**	Y	
	VISUAL EXAMINATION EXPERT REQUIREMENTS					
300	Does documentation ensure that the site has designated a visual examination expert? Is the visual examination expert familiar with the waste generating processes that have taken place at the site? Is the visual examination expert familiar with all of the types of waste being characterized at that site? (Section C1-2)	MP-TRUW-8.1 Appendix G, S. G.2 MP-RTQP-14.4 (All)	Y	Training and Qualification Records for VE Experts and VE Experts Appointment Memorandum **(VE-3)**	Y	

	WAP Requirement[1] AMWTP Recertification Audit A-15-01 Table C6-4 Visual Examination (VE) Checklist	Procedure Documented		Example of Implementation/ Objective Evidence, as applicable		Comment (e.g., any change in procedure since last audit, etc.)
		Location	Adequate? Y/N (Why)	Item Reviewed	Adequate? Y/N	
301	Does documentation ensure that the visual examination expert shall be responsible for the overall direction and implementation of the visual examination aspects of the program? Does the site's QAPjP specify the selection, qualification, and training requirements of the visual examination expert? (Section C1-2)	MP-TRUW-8.1 Appendix G, S. G.2 INST-FOI-17 S. 2.0 INST-OI-34 S. 2.0	Y	Training and Qualification Records for VE Experts and VE Experts Appointment Memorandum **(VE-3)**	Y	
	VISUAL EXAMINATION PROCEDURES					
304	Do procedures indicate that all visual examination activities are documented on video/audio media or VE performed by using a second operator to provide additional verification by reviewing the contents of the waste container to ensure correct reporting? (Section C1-2)	INST-FOI-17 S. 3.1.16 INST-OI-34 S. 3.2.5	Y	VE BDRs: VNC13-00170 VEB13-00518 VNC14-00022 VEB14-00026 VEB14-00054 VEB14-00079 VEB14-00117 VEB14-00146 VEB14-00180 VEB14-00212 VEB14-00254 **(VE-1)**	Y	
304a	Are procedures in place to ensure that when VE is performed using a second operator, each operator performing VE shall observe for themselves the waste being placed in the container or the contents within the examined waste container when waste is not removed? (Section C1-2)	INST-FOI-17 S. 3.1.16 INST-OI-34 S. 5.0 VE definition	Y	VE BDRs: VNC13-00170 VEB13-00518 VNC14-00022 VEB14-00026 VEB14-00054 VEB14-00079 VEB14-00117 VEB14-00146 VEB14-00180 VEB14-00212 VEB14-00254 **(VE-1)**	Y	
313	Do site procedures ensure that when liquid is found, the non-transparent internal container holding the liquid will be assumed to be filled with liquid and this volume will be added to the total liquid in the container being characterized using VE? The container being characterized using VE would then be rejected and/or repackaged to exclude the internal container if it is over the TSDF-WAC limits. (Section C-3b)	INST-FOI-17 S. 4.2.17, 4.2.18 & Exhibit 4 INST-OI-34 S. 3.1.3, 4.2.21 & Exhibit 4	Y	VE BDRs: VNC13-00170 VEB13-00518 VNC14-00022 VEB14-00026 VEB14-00054 VEB14-00079 VEB14-00117	Y	

	WAP Requirement[1] AMWTP Recertification Audit A-15-01 Table C6-4 Visual Examination (VE) Checklist	Procedure Documented		Example of Implementation/ Objective Evidence, as applicable		Comment (e.g., any change in procedure since last audit, etc.)
		Location	Adequate? Y/N (Why)	Item Reviewed	Adequate? Y/N	
				VEB14-00146 VEB14-00180 VEB14-00212 VEB14-00254 **(VE-1)**		
	QUALITY ASSURANCE OBJECTIVES					
314	Are process procedures in place to meet the following Quality Assurance Objectives? Precision • Precision is maintained by reconciling any discrepancies between the operator and the independent technical reviewer with regard to identification of waste matrix code, liquids in excess of TSDF-WAC limits, and compressed gases. Accuracy • Accuracy is maintained by requiring operators to pass a comprehensive examination and demonstrate satisfactory performance in the presence of the VE expert during their initial qualification. VE operators shall be requalified every two years. Completeness • A validated VE data form will be obtained for 100 percent of the waste containers subject to VE. Comparability • The comparability of VE data from di fferent operators shall be enhanced by using standardized VE procedures and operator qualifications. (Section C3-2b)	MP-TRUW-8.8 S. 3.2.4.10	Y	VE BDRs: VNC13-00170 VEB13-00518 VNC14-00022 VEB14-00026 VEB14-00054 VEB14-00079 VEB14-00117 VEB14-00146 VEB14-00180 VEB14-00212 VEB14-00254 **(VE-1)** Training and Qualification Records for VE Operators **(VE-2)** Training and Qualification Records for VE Experts and VE Experts Appointment Memorandum **(VE-3)**	Y	

1. The WAP requirements should be presented in documents, such as procedures. Each of the questions posed under WAP requirements is meant to ask whether procedures are in place or whether documents are evident which demonstrate that the specific WAP requirement is or can be met.

AMWTP

Advanced Mixed Waste Treatment Project

AMWTP

Batch Report Coversheet

Date: 27-Sep-2014

Time: 05:09

VE1

Batch Type Visual Exam Newly Generated Waste Closure

Batch Report No. VNC13-00170

Batch Id VNC13-00170

Open Date 15-OCT-13 13:42:26

Close Date 15-OCT-13 13:42:35

Batch Status AP

Test Facility Idaho AMWTP

Container Id	IDC	Analysis Id	Date Examined	QC Type	Analysis Status	Operator
10505107	BN-500	0000312682	15-OCT-13 13:42:26	Original	P	RICHARD SCOTT

INFORMATION ONLY

**********Batch Comments**********

Written By	Date	Comment
NBREWSTER	15-OCT-13 13:42:36	Esigned.
MSORENSON	29-AUG-14 11:14:46	This batch was validated electronically per MP-TRUW-8.8.
MSORENSON	29-AUG-14 11:14:47	Rework: Container 10505107. Please update Equipment Id to FAC-VNC.
MSORENSON	29-AUG-14 11:14:47	Demote to operations for rework.
RSCOTT	29-AUG-14 15:25:23	changed equipment ID to fac-vnc rls 08-29-14
MSORENSON	29-AUG-14 16:23:53	Promote to SPM.
RWALKER	10-SEP-14 12:27:13	SPM validation complete. Promote batch.

**********Batch E-Signature History**********

Approval ID	User ID	Signature Date	Comment
2639729	NBREWSTER	15-OCT-2013 13:42:36	
2824517	MSORENSON	29-AUG-2014 11:14:47	Demote to operations for rework.
2824660	RSCOTT	29-AUG-2014 15:25:23	changed equipment ID to fac-vnc rls 08-29-14
2824724	MSORENSON	29-AUG-2014 16:23:53	Promote to SPM.
2831201	RWALKER	10-SEP-2014 12:27:13	SPM validation complete. Promote batch.

***** End of Batch Report Coversheet Report *****

AMWTP

Advanced Mixed Waste Treatment Project

AMWTP

VE Newly Generated Waste Closure Report

Date: 27-Sep-2014

Time: 05:09

Batch Id VNC13-00170 **Container Id** 10505107 **Analysis Id** 0000312682

Analysis Status Pass **Testing Facility** Idaho AMWTP

SAA Location 633, NF **VE Date** 15-OCT-2013 13:42 **IDC** BN-500

Equipment Id FAC-VNC

Procedure Id INST-FOI-17 **Revision** 27 **VE Weight in Lbs.** 72.77 **Net Weight in Lbs.** 13.77

Container Type 425

Operator 1 RICHARD SCOTT **Operator 2** MICHAEL BECK

General

Rigid Liner Present? No **Liner Punctured?** Yes **Liner Type** NO LINER

Layers Of Confinement 2 **Fill Factor (In %)** 75 **Liner Lid Present** No

Liquids

Liquids Present? No **Comment**

Liquid Between Liner and Drum 0 pints **Other Liquids** 0 pints

Containerized Liquid 0 pints **Total Liquid** 0 pints

Internal Container with Liquid 0 pints

Internal Container with Liquid No

Prohibited Liquids Present No

Containerized Liquid No

Contents

Sharp Objects? Yes **Are Sharp Objects Protected?** No

	Value	*Comment*
Prohibited Compressed Gas Present?	No	
Mercury Present?	No	
Beryllium Contaminants Present?	No	
Explosives Present?	No	
PCBs Present?	No	
PCB Mass (lbs)	0	
Pyrophorics Present?	No	
Corrosives,Ignitables or Reactives Present?	No	
Wet Cell Batteries Present?	No	
Hazardous Only Waste Present?	No	
Is Waste Incompatible with backfill, packaging materials, or shipping container materials?	No	
Sealed Containers Over 4L?	No	

VE Newly Generated Waste Closure Report

Batch Id VNC13-00170 **Container Id** 10505107 **Analysis Id** 0000312682

Waste Summary

Package ID	Material Item	Qty	Unit	Unit Wt	Est. Item Wt Lbs
10505107	Container tare weight	1.00	Each	59.00	59.00
10505109		1.00	Each	13.77	13.77
	Estimated Total Weight--->				72.77

Waste Parameters

Waste Parameter	Weight Lbs
Steel (packaging materials)	59.00
Other metals	0.00
Inorganic matrix	0.00
Organic matrix	0.00
Soils/gravel	0.00
Rubber	0.60
Other Inorganic Materials	0.00
Plastic (packaging materials)	0.00
Aluminum-based Metals/Alloys	0.00
Cellulosics	10.20
Cellulosics Packaging	0.00
Iron-based Metals/Alloys	1.20
MLLW Waste	0.00
Plastic (Waste Materials)	1.77
Total Weight--->	72.77

IDC Verification

Is IDC correct? Yes **Recommended IDC**

IDC Change Reason

Closure Method Twisted and Taped **Waste Matrix Code** S5490

Closure Date 15-OCT-13 13:42:26

Pack. Material Tare Wt. lbs 59

Waste Material Items

Packaging Materials

Material Item	Quantity	Unit	Unit Wt	Item Wt(lbs)

Waste Items by Weight

Material Item	Quantity	Unit	Unit Wt	Item Wt(lbs)

Waste Items by Volume

Material Item	Quantity	Unit	Unit Wt	Item Wt(lbs)

Waste Parameters

Waste Parameter	Remaining Weight %	Actual Weight Lbs
Iron-based Metals/Alloys	0.000	0.000
Aluminum-based Metals/Alloys	0.000	0.000
Other metals	0.000	0.000
Other Inorganic Materials	0.000	0.000
Cellulosics	0.000	0.000
Rubber	0.000	0.000
Plastic (Waste Materials)	100.000	0.000
Inorganic matrix	0.000	0.000
Organic matrix	0.000	0.000
Soils/gravel	0.000	0.000
Steel (packaging materials)	0.000	59.000
Plastic (packaging materials)	0.000	0.000
Cellulosics Packaging	0.000	0.000
MLLW Waste	0.000	0.000
Total--->	100.00	59.00

Container Filters

WDS Filter Code	Event	Event Date	Entered By	Remove	Other Filter Model	Exclude

Batch Id VNC13-00170 **Container Id** 10505107 **Analysis Id** 0000312682

Visual Exam Comment Remaining waste by weight percent is Plastic Waste Materials consisting of tape. changed equipment ID to fac-vnc rls 08-29-14

NF19SD	OTHER	15-Oct-2013	CCADY	N

Filter Comment

E-Signature History

Esig Approval I	User	Esig Date	Comment
2824659	MBECK1	29-AUG-2014 15:24:46	changed equipment ID to fac-vnc rls 08-29-14
2824658	RSCOTT	29-AUG-2014 15:24:46	changed equipment ID to fac-vnc rls 08-29-14
2824657	MBECK1	29-AUG-2014 15:24:17	
2824656	RSCOTT	29-AUG-2014 15:24:17	changed equipment ID to fac-vnc rls 08-29-14
2639728	PHURLEY	15-OCT-2013 13:42:30	
2639727	NBREWSTER	15-OCT-2013 13:42:28	

-----End of VE Newly Generated Waste Closure Report-----

AMWTP
Advanced Mixed Waste Treatment Project

AMWTP

VE Newly Generated Waste Package Report

Date: 27-Sep-2014

Time: 05:09

Batch Id VNC13-00170

Analysis ID 0000312680 **Package ID** 10505109 **SAA Container ID** 10505107

VE Date 15-OCT-2013 13:37 **Package Wt.** 13.765 Lbs **Waste Activity** Other (describe)

Operator 1 NATHAN BREWSTER **Equipment Id** FAC-VNC **Procedure Id** INST-FOI-17

Operator 2 PAUL HURLEY **Revision** 27

General

Closure Method Twisted and Taped **IDC** BN-500 **IDC Desc** Newly Generated Debris (not BN-508)

Visual Exam Comment Plasma fliter changeout in hot maintenance room 224B. Remaining waste by weight percent is Plastic Waste Materials consisting of tape.

Liquids

Liquids Present? No **Comment**

Liquid Between Liner and Drum 0 pints **Other Liquids** 0 pints

Internal Container with Liquid 0 pints **Total Liquid** 0 pints

Containerized Liquid pints

Internal Container with Liquid No

Prohibited Liquids Present No

Containerized Liquid

Contents

Sharp Objects? Yes **Are Sharp Objects Protected?** No

	Value	*Comment*
Prohibited Compressed Gas Present?	No	
Mercury Present?	No	
Explosives Present?	No	
PCBs Present?	No	
PCB Mass (lbs)	0	
Pyrophorics Present?	No	
Corrosives,Ignitables or Reactives Present?	No	
Wet Cell Batteries Present?	No	
Beryllium Contaminants Present?	No	
Hazardous Only Waste Present?	No	
Is Waste Incompatible with backfill, packaging materials, or shipping container materials?	No	
Sealed Containers Over 4L?	No	

Source Container

Is there a Source Container? No

Source Container ID	Location	IDC

AMWTP

VE Newly Generated Waste Package Report

Date: 27-Sep-2014

Time: 05:09

Batch Id VNC13-00170

Analysis ID 0000312680 **Package ID** 10505109

Waste Material Items

Packaging Materials

Material Item	Quantity	Unit	Unit Wt	Item Wt(lbs)

Waste Items by Weight

Material Item	Quantity	Unit	Unit Wt	Item Wt(lbs)
Plastic bag for waste	2.000	EACH	0.250	0.500
Plasma Filter	1.000	EACH	12.000	12.000

Waste Items by Volume

Material Item	Quantity	Unit	Unit Wt	Item Wt(lbs)

Waste Parameters

Waste Parameter	Remaining Weight %	Actual Weight Lbs
Iron-based Metals/Alloys	0.000	1.200
Aluminum-based Metals/Alloys	0.000	0.000
Other metals	0.000	0.000
Other Inorganic Materials	0.000	0.000
Cellulosics	0.000	10.200
Rubber	0.000	0.600
Plastic (Waste Materials)	100.000	1.765
Inorganic matrix	0.000	0.000
Organic matrix	0.000	0.000
Soils/gravel	0.000	0.000
Steel (packaging materials)	0.000	0.000
Plastic (packaging materials)	0.000	0.000
Cellulosics Packaging	0.000	0.000
MLLW Waste	0.000	0.000
Total Weight --->		13.765

ESignature

Esig Id	User Id	Date	Comment
2639722	PHURLEY	15-OCT-2013 13:37:56	
2639721	NBREWSTER	15-OCT-2013 13:37:54	

------End of VE Newly Generated Waste Package Report-----

AMWTP
Advanced Mixed Waste Treatment Project

AMWTP

Checklist Report

Date: 27-Sep-2014

Time: 05:10

Batch Id VNC13-00170 **Open Date** 15-OCT-13 **Close Date** 15-OCT-13

Reviewer MARK SORENSON **Approval Level** Independent Technical Reviewer

Approval Date 29-AUG-14 **Review Iteration** 1

Question Text	Answer	Requirement	Comment
1. Is the QA documentation for the Batch Data Reports complete and includes data reports and QC results? o VE Batch Coversheet o Table of Contents (manual review only) o VE Analysis Reports o Analytical Balance Calibration Check Sheet (Form-1215), if applicable (manual review only) o ITR Checklist (Form-1415, manual review only) o Batch Data Report Supplemental Comment Form (Form-1491, manual review only) o Associated NCRs (referenced in WTS) o Audio/Video Recording References, if applicable	Yes		
2. Are there 20 containers or less in the batch?	Yes		
3. Was each VE Operator qualified at the time of the VE event?	Yes		
4. Was a VE data form completed for each container in the batch?	Yes		
Was the data generated in a technically correct manner using the correct revision of INST-OI-34, Non-facility Visual Examination or INST-FOI-17, Facility Visual Examination Operations, as applicable.	Yes		
6. Was the correct revision of the procedure documented on each analysis report?	Yes		
7. Was the E-signature History review performed?	Yes		
8. Was guidance from VEE documented, as applicable?	N/A		
9. Does every drum reported in the batch have a valid audio/video recording (as applicable)?	N/A		
10. Does the physical form match the waste stream description, waste matrix code and IDC?	Yes		
11. Did the VE event result in an IDC/Waste Matrix Code change? If so, was an NCR initiated?	No		
12. Were the waste material parameters documented correctly?	Yes		
13. Was the presence or absence of prohibited items properly identified? o If prohibited items were identified, were NCRs initiated?	Yes		
14. Has the description of rigid liners and layers of confinement been properly documented?	Yes		
15. Was the drum age criteria (DAC) entered correctly and completely? o Closure Method(s) o Liner Puncture Status o Layers of Confinement o Closure Date o Packaging Configuration o Type and number of filters, as applicable o Liner hole presence and diameter, as applicable	Yes		
16. Have filters been installed or removed from drum as recorded in WTS, as applicable?	Yes		
17. Hand calculations and unit conversions are correct? o Does the packaging weight plus the net weight equal the gross weight of the drum in the estimated waste material parameters, and for the unit conversions that are entered by volume or weight?	Yes		
18. Were all units and significant figures used correct for all reported volumes/weights?	Yes		

Batch Id VNC13-00170 **Open Date** 15-OCT-13 **Close Date** 15-OCT-13

Reviewer MARK SORENSON **Approval Level** Independent Technical Reviewer

Approval Date 29-AUG-14 **Review Iteration** 1

Question Text	Answer	Requirement	Comment
19. Has the data been reviewed for transcription errors as appropriate?	Yes		
20. Were the Visual Examination QAOs met? o Precision o Accuracy o Completeness o Comparability	Yes		
21. Is each data form signed by qualified VE Operators, as applicable per the appropriate procedure being used?	Yes		
22. Was the audio/video check satisfactory, as applicable?	N/A		
23. Was the scale or balance check weight event satisfactory, as applicable?	N/A		
24. Are the QC weight checks within the tolerance of the scale or balance, as applicable?	N/A		
25. Were any NCRs generated for drums containing prohibited items or any nonconforming conditions that failed to meet DQOs or QAOs? o Include the NCRs as appropriate, in the Batch Data Report.	No		
26. Were the rework requirements clearly identified in WTS or on the BDR?	Yes		See batch comments.

Batch Id VNC13-00170 **Open Date** 15-OCT-13 **Close Date** 15-OCT-13

Reviewer MARK SORENSON **Approval Level** Independent Technical Reviewer

Approval Date 29-AUG-14 **Review Iteration** 2

Question Text	Answer	Requirement	Comment
1. Is the QA documentation for the Batch Data Reports complete and includes data reports and QC results? o VE Batch Coversheet o Table of Contents (manual review only) o VE Analysis Reports o Analytical Balance Calibration Check Sheet (Form-1215), if applicable (manual review only) o ITR Checklist (Form-1415, manual review only) o Batch Data Report Supplemental Comment Form (Form-1491, manual review only) o Associated NCRs (referenced in WTS) o Audio/Video Recording References, if applicable	Yes		
2. Are there 20 containers or less in the batch?	Yes		
3. Was each VE Operator qualified at the time of the VE event?	Yes		
4. Was a VE data form completed for each container in the batch?	Yes		
Was the data generated in a technically correct manner using the correct revision of INST-OI-34, Non-facility Visual Examination or INST-FOI-17, Facility Visual Examination Operations, as applicable.	Yes		
6. Was the correct revision of the procedure documented on each analysis report?	Yes		
7. Was the E-signature History review performed?	Yes		
8. Was guidance from VEE documented, as applicable?	N/A		
9. Does every drum reported in the batch have a valid audio/video recording (as applicable)?	N/A		
10. Does the physical form match the waste stream description, waste matrix code and IDC?	Yes		
11. Did the VE event result in an IDC/Waste Matrix Code change? If so, was an NCR initiated?	No		
12. Were the waste material parameters documented correctly?	Yes		
13. Was the presence or absence of prohibited items properly identified? o If prohibited items were identified, were NCRs initiated?	Yes		
14. Has the description of rigid liners and layers of confinement been properly documented?	Yes		
15. Was the drum age criteria (DAC) entered correctly and completely? o Closure Method(s) o Liner Puncture Status o Layers of Confinement o Closure Date o Packaging Configuration o Type and number of filters, as applicable o Liner hole presence and diameter, as applicable	Yes		
16. Have filters been installed or removed from drum as recorded in WTS, as applicable?	Yes		
17. Hand calculations and unit conversions are correct? o Does the packaging weight plus the net weight equal the gross weight of the drum in the estimated waste material parameters, and for the unit conversions that are entered by volume or weight?	Yes		
18. Were all units and significant figures used correct for all reported volumes/weights?	Yes		

Batch Id VNC13-00170 **Open Date** 15-OCT-13 **Close Date** 15-OCT-13

Reviewer MARK SORENSON **Approval Level** Independent Technical Reviewer

Approval Date 29-AUG-14 **Review Iteration** 2

Question Text	Answer	Requirement	Comment
19. Has the data been reviewed for transcription errors as appropriate?	Yes		
20. Were the Visual Examination QAOs met? o Precision o Accuracy o Completeness o Comparability	Yes		
21. Is each data form signed by qualified VE Operators, as applicable per the appropriate procedure being used?	Yes		
22. Was the audio/video check satisfactory, as applicable?	N/A		
23. Was the scale or balance check weight event satisfactory, as applicable?	N/A		
24. Are the QC weight checks within the tolerance of the scale or balance, as applicable?	N/A		
25. Were any NCRs generated for drums containing prohibited items or any nonconforming conditions that failed to meet DQOs or QAOs? o Include the NCRs as appropriate, in the Batch Data Report.	No		
26. Were the rework requirements clearly identified in WTS or on the BDR?	Yes		See batch comments.

Batch Id VNC13-00170 **Open Date** 15-OCT-13 **Close Date** 15-OCT-13

Reviewer REED WALKER **Approval Level** SPM Data Validation

Approval Date 10-SEP-14 **Review Iteration** 1

Question Text	Answer	Requirement	Comment
(1) Has the batch received a Data Generation Level Independent Technical Review?	Yes	MP-TRUW-8.2, C3-10b(1)	
(2) Are the batch data review checklists complete?	Yes	MP-TRUW-8.2, C3-10b(1)	
(3) When identified, were PCBs, mercury, lead, or other hazardous contaminants consistent with the waste stream AK Summary Report(s) and/or AK documentation?	N/A	MP-TRUW-8.2, C4-3	None were identified.
(4) Are any ignitable, corrosive, or reactive wastes identified?	No	MP-TRUW-8.2, C4-3	
(5) Are the packaging configurations identified on the VE consistent with the waste stream AK Summary Report(s) and/or AK documentation?	Yes	MP-TRUW-8.2, C4-3	
(6) Do the drums in this batch contain typical waste items consistent with waste stream AK Summary Report(s) and/or AK documentation?	Yes	MP-TRUW-8.2, C4-3	
(7) Are the Waste Matrix Codes and physical form descriptions consistent with AK?	Yes	MP-TRUW-8.2, C4-3	
(8) Have all AK discrepancies been resolved and have all AK Resolution checklists been approved? Reference all waste stream AK documentation used in review of this data package.	N/A	MP-TRUW-8.2, C4-3	No discrepancies identified.
(9) Does the batch report identify the correct implementing procedure number and revision number used for this testing method?	Yes	MP-TRUW-8.2, C3-4 and Table C3-11	
(10) Have the Waste Matrix Code (WMC) and IDC for all drums in the batch remained the same as originally assigned by the historical designation? NOTE: If not, note the drum number in the comment field and notify the Acceptable Knowledge Expert (AKE) if an NCR does not exist for the WMC and IDC change.	Yes	MP-TRUW-8.2, C-3c and C1-4	
(11) Does the physical form of the waste match the WMC, waste stream description, and identify the absence of prohibited items?	Yes	MP-TRUW-8.2, C-3c and C1-4	
(12) If observable liquids exist in the drum, is an estimate of quantity given?	N/A	MP-TRUW-8.2, C-3c and C1-4	No liquids identified.
(13) Precision: Have all discrepancies been reconciled between the operator and the ITR with regard to identification of WMC, liquids in excess of TSDF-WAC limits, and compressed gases?	Yes	MP-TRUW-8.2 C3-4b	
(14) Accuracy: Have all operators passed a comprehensive examination and demonstrated satisfactory performance in the presence of the VE expert during initial and subsequent qualifications?	Yes	MP-TRUW-8.2 C3-4b	
(15) Completeness: Has a validated VE data form been obtained for 100% of the waste containers subject to VE?	Yes	MP-TRUW-8.2 C3-4b	
(16) Comparability: Has the comparability of VE data from different operators been enhanced by use of standardized VE procedures and operator qualifications?	Yes	MP-TRUW-8.2 C3-4b	
(17) Does the data for all containers within this batch meet the review, validation, and verification requirements? · Are proper units (e.g. Liters or pounds) and significant figure used? · Is the BDR complete (all pages identified in the BDR and numbered according)? - VE Batch Coversheet - Table of Contents (manual review only) - VE Analysis Reports - Analytical Balance Calibration Checklist (if applicable) - ITR Checklist (Form-1415)	Yes	MP-TRUW-8.2, C3-10b and Table C3-11	

Batch Id VNC13-00170 **Open Date** 15-OCT-13 **Close Date** 15-OCT-13

Reviewer REED WALKER **Approval Level** SPM Data Validation

Approval Date 10-SEP-14 **Review Iteration** 1

Question Text	Answer	Requirement	Comment
- Associated NCRs - Audio/Video Recordings (if applicable)			
(18) Do the drum reports contain the (a) Batch Data Report number and date, (b) waste container number (c)WMC, (d) implementing procedure and revision, (e) audio/video recording reference, (f) audio and video QC checks were performed and satisfactory, (g) verification that the physical form matches the waste stream description and WMC, (h) absence of prohibited items, (i) gross container weight, (j) waste material parameter weights, and (k) signature and date of examination (signatures of both operators when applicable)?	Yes	MP-TRUW-8.2, C1-4 and Table C3-11	
(19) Is the description of container contents detailed enough to provide verification of estimated weights for the waste matrix parameters identified?	Yes	MP-TRUW-8.2, C1-4 and Table C3-11	
(20) Is there a valid second weight check for every 10 items?	N/A	MP-TRUW-8.2, C1-4	Not required for this batch.
(21) Verification of two operator signatures when doing VE?	Yes	MP-TRUW-8.2, C-3d(1) and Table C3-11	
(22) Are there 20 or fewer containers in the batch?	Yes	MP-TRUW-8.2, C1-3 and C3-10	
(23) Review all NCRs (open and closed). Can the batch be approved?	Yes	MP-TRUW-8.2, C3-13	No NCRs.
(24) All data associated with this BDR is acceptable for signature release?	Yes	MP-TRUW-8.2, C3-10b and C3-10b(1)	

Batch Id VNC13-00170 **Open Date** 15-OCT-13 **Close Date** 15-OCT-13

Esignature History

Esig Approval ID	User ID	Esig Date	Approval Level	Comments
2831201	RWALKER	10-SEP-14	SPM	SPM validation complete. Promote batch.
2824724	MSORENSON	29-AUG-14	ITR	Promote to SPM.
2824517	MSORENSON	29-AUG-14	ITR	Demote to operations for rework.

AMWTP

Advanced Mixed Waste Treatment Project

AMWTP

Non-Conformance Report

Date: 27-Sep-2014

Time: 05:10

*****Batch NCR(s)*****

Batch Type	VNC	**Batch ID**	VNC13-00170		
Trackwise Number		**Status**		**Opened Date**	**Closed Date**

*****Container NCR(s)*****

Container ID *or related Batch ID*	**Trackwise Number**	**Status**	**Opened Date**	**Closed Date**

*****End of Non-Conformance Report*****

DIVIDER

PAGE

AMWTP

Advanced Mixed Waste Treatment Project

AMWTP

Batch Report Coversheet

Date: 26-Sep-2014

Time: 08:43

Batch Type VE Boxline

Batch Report No. VEB13-00518

Batch Id VEB13-00518

Open Date 12-NOV-13 20:37:29

Close Date 13-NOV-13 12:00:58

Batch Status AP

Test Facility Idaho AMWTP

Equipment Id VE BiD RPCK VE Box Repackaging Into Drums

Container Id	IDC	Analysis Id	Date Examined	QC Type	Analysis Status	Operator
10503290	BN-508	0000313188	12-NOV-13 20:37:30	Original	P	MIKE REIDER
10503298	BN-508	0000313189	12-NOV-13 20:50:41	Original	P	MIKE REIDER
10503291	BN-508	0000313190	12-NOV-13 21:02:24	Original	P	MIKE REIDER
10503297	BN-508	0000313191	12-NOV-13 21:39:52	Original	P	MIKE REIDER
10503292	BN-508	0000313192	12-NOV-13 21:51:11	Original	P	MIKE REIDER
10503295	BN-508	0000313193	12-NOV-13 22:05:44	Original	P	MIKE REIDER
10503293	BN-508	0000313194	12-NOV-13 22:17:10	Original	P	MIKE REIDER
10503294	BN-508	0000313195	12-NOV-13 22:27:07	Original	P	MIKE REIDER
10506817	BN-508	0000313196	12-NOV-13 22:37:06	Original	P	MIKE REIDER
10506808	BN-508	0000313197	12-NOV-13 22:49:14	Original	P	MIKE REIDER
10506816	BN-508	0000313198	12-NOV-13 22:59:56	Original	P	MIKE REIDER
10506809	BN-508	0000313199	12-NOV-13 23:15:07	Original	P	MIKE REIDER
10506815	BN-508	0000313200	12-NOV-13 23:26:58	Original	P	MIKE REIDER
10506806	BN-508	0000313207	13-NOV-13 09:50:36	Original	P	ROBERT PURCELL
10506814	BN-508	0000313208	13-NOV-13 10:04:08	Original	P	ROBERT PURCELL
10506807	BN-508	0000313209	13-NOV-13 10:16:06	Original	P	ROBERT PURCELL
10506813	BN-508	0000313210	13-NOV-13 10:32:08	Original	P	ROBERT PURCELL
10506804	BN-508	0000313211	13-NOV-13 10:49:12	Original	P	ROBERT PURCELL
10506812	BN-508	0000313212	13-NOV-13 11:00:28	Original	P	ROBERT PURCELL
10506805	BN-508	0000313213	13-NOV-13 11:59:59	Original	P	ROBERT PURCELL

INFORMATION ONLY

**********Batch Comments**********

Written By	Date	Comment
RGRISE	13-NOV-13 15:59:12	Initial validation performed electronically per MP-TRUW-8.8
RGRISE	13-NOV-13 15:59:13	Promote batch to SPM level.
RWALKER	14-NOV-13 11:01:43	SPM validation complete. Promote batch.

**********Batch E-Signature History**********

Approval ID	User ID	Signature Date	Comment
2654211	RGRISE	13-NOV-2013 15:59:13	Promote batch to SPM level.
2654617	RWALKER	14-NOV-2013 11:01:43	SPM validation complete. Promote batch.

***** End of Batch Report Coversheet Report *****

AMWTP
Advanced Mixed Waste Treatment Project

AMWTP

VE Boxline and Repackaging Report

Date: 26-Sep-2014

Time: 08:44

Batch Id VEB13-00518 **Container Id** 10503290 **Analysis Id** 0000313188

VE Date 12-NOV-13 20:37:30 **Analysis Status** Pass

Gen-IDC Code BN-508 AMWTP Newly Generated Debris **VE Weight** 119.07 lbs.

Closure Date 12-NOV-13 20:37:30 **Procedure Id** INST-FOI-17 **Net Weight** 93.07 lbs.

Container Type 55 **Revision** 27

Operator 1 MIKE REIDER **Waste Matrix** S5490 **Summary Category Group** S5000

Operator 2 JEFF MARTINEZ **Equipment ID** VE BiD RPCK

General

Rigid Liner Present? No **Liner Type** NO LINER **Closure Method** No Bags

Liner Punctured? Yes **Layers Of Confinement** 0 **Fill Factor** 80 % **Liner Lid Present** No

Liquids

Liquids Present? No **Comment**

Liquid Between Liner and Drum 0 pints **Other Liquids** 0 pints

Containerized Liquid pints **Total Liquid Amount** 0 pints

Internal Container with Liquid 0 pints

Internal Container with Liquid No

Prohibited Liquids Present No

Containerized Liquid

Contents

Sharp Objects? No **Are Sharp Objects Protected?** Yes

	Value	*Comment*
Prohibited Compressed Gas Present?	No	
Explosives Present?	No	
Pyrophorics Present?	No	
Mercury Present?	No	
PCBs Present?	No	
PCB Mass (lbs)	0	
Wet Cell Batteries Present?	No	
Corrosives,Ignitables or Reactives Present?	No	
Beryllium Contaminates Present?	No	
Hazardous-Only Waste Present?	No	
Is Waste Incompatible with backfill, packaging materials, or shipping container materials?	No	
Sealed Containers Over 4L?	No	

IDC Verification

Is IDC correct? Yes **Recommended IDC** -

IDC Change Reason

Visual Exam Comment Remaining waste by weight percent is misc. plastics, plastic bags, ppe, airline hose

Batch Id VEB13-00518 **Container Id** 10503290 **Analysis Id** 0000313188

Source Container

Is there a source container? Yes

Source Container ID	Location	IDC
10498834	destroyed @ 676- BXI/15	RF-760

IDC CODES

Current Container IDC Code: BN-508 **Recommended IDC Code:** -

Waste Material Items

Packaging Materials

Material Item	Quantity	Unit	Unit Wt	Item Wt(lbs)

Waste Items by Weight

Material Item	Quantity	Unit	Unit Wt	Item Wt(lbs)

Waste Items by Volume

Material Item	Quantity	Unit	Unit Wt	Item Wt(lbs)
Paper	1.000	PINTS	0.969	0.970
Rubber	2.000	PINTS	1.554	3.110

Waste Parameters

Waste Parameter	Remaining Weight %	Actual Weight Lbs
Iron-based Metals/Alloys	0.000	0.000
Aluminum-based Metals/Alloys	0.000	0.000
Other metals	0.000	0.000
Other Inorganic Materials	0.000	0.000
Cellulosics	0.000	0.970
Rubber	0.000	3.110
Plastic (Waste Materials)	100.000	88.990
Inorganic matrix	0.000	0.000
Organic matrix	0.000	0.000
Soils/gravel	0.000	0.000
Steel (packaging materials)	0.000	26.000
Plastic (packaging materials)	0.000	0.000
Cellulosics Packaging	0.000	0.000

Esignature History

Esig Approval Id	User Id	E-signature Date	Comment
2653426	MREIDER	12-NOV-13 20:37:30	
2653427	JMARTINEZ	12-NOV-13 20:37:32	

VE Boxline and Repackaging Report

Batch Id VEB13-00518 **Container Id** 10503298 **Analysis Id** 0000313189

VE Date 12-NOV-13 20:50:41 **Analysis Status** Pass

Gen-IDC Code BN-508 AMWTP Newly Generated Debris **VE Weight** 83.79 lbs.

Closure Date 12-NOV-13 20:50:41 **Procedure Id** INST-FOI-17 **Net Weight** 57.79 lbs.

Container Type 55 **Revision** 27

Operator 1 MIKE REIDER **Waste Matrix** S5490 **Summary Category Group** S5000

Operator 2 JEFF MARTINEZ **Equipment ID** VE BiD RPCK

General

Rigid Liner Present? No **Liner Type** NO LINER **Closure Method** No Bags

Liner Punctured? Yes **Layers Of Confinement** 0 **Fill Factor** 60 % **Liner Lid Present** No

Liquids

Liquids Present? No **Comment**

Liquid Between Liner and Drum 0 pints **Other Liquids** 0 pints

Containerized Liquid pints **Total Liquid Amount** 0 pints

Internal Container with Liquid 0 pints

Internal Container with Liquid No

Prohibited Liquids Present No

Containerized Liquid

Contents

Sharp Objects? Yes **Are Sharp Objects Protected?** No

	Value	*Comment*
Prohibited Compressed Gas Present?	No	
Explosives Present?	No	
Pyrophorics Present?	No	
Mercury Present?	No	
PCBs Present?	No	
PCB Mass (lbs)	0	
Wet Cell Batteries Present?	No	
Corrosives,Ignitables or Reactives Present?	No	
Beryllium Contaminates Present?	No	
Hazardous-Only Waste Present?	No	
Is Waste Incompatible with backfill, packaging materials, or shipping container materials?	No	
Sealed Containers Over 4L?	No	

IDC Verification

Is IDC correct? Yes **Recommended IDC** -

IDC Change Reason

Visual Exam Comment Remaining waste by weight percent is misc. iron based metal alloys consisting of depressurized fire extinguishers and scrap metal

Batch Id VEB13-00518 **Container Id** 10503298 **Analysis Id** 0000313189

Source Container

Is there a source container? Yes

Source Container ID	Location	IDC
10498834	destroyed @ 676- BXI/15	RF-760

IDC CODES

Current Container IDC Code: BN-508 **Recommended IDC Code:** -

Waste Material Items

Packaging Materials

Material Item	Quantity	Unit	Unit Wt	Item Wt(lbs)

Waste Items by Weight

Material Item	Quantity	Unit	Unit Wt	Item Wt(lbs)

Waste Items by Volume

Material Item	Quantity	Unit	Unit Wt	Item Wt(lbs)
Rubber	1.000	PINTS	1.554	1.550
Plastic	1.000	PINTS	0.937	0.940

Waste Parameters

Waste Parameter	Remaining Weight %	Actual Weight Lbs
Iron-based Metals/Alloys	100.000	55.300
Aluminum-based Metals/Alloys	0.000	0.000
Other metals	0.000	0.000
Other Inorganic Materials	0.000	0.000
Cellulosics	0.000	0.000
Rubber	0.000	1.550
Plastic (Waste Materials)	0.000	0.940
Inorganic matrix	0.000	0.000
Organic matrix	0.000	0.000
Soils/gravel	0.000	0.000
Steel (packaging materials)	0.000	26.000
Plastic (packaging materials)	0.000	0.000
Cellulosics Packaging	0.000	0.000

Esignature History

Esig Approval Id	User Id	E-signature Date	Comment
2653430	MREIDER	12-NOV-13 20:50:42	
2653431	JMARTINEZ	12-NOV-13 20:50:44	

Batch Id VEB13-00518 **Container Id** 10503291 **Analysis Id** 0000313190

VE Date 12-NOV-13 21:02:24 **Analysis Status** Pass

Gen-IDC Code BN-508 AMWTP Newly Generated Debris **VE Weight** 68.36 lbs.

Closure Date 12-NOV-13 21:02:24 **Procedure Id** INST-FOI-17 **Net Weight** 42.36 lbs.

Container Type 55 **Revision** 27

Operator 1 MIKE REIDER **Waste Matrix** S5490 **Summary Category Group** S5000

Operator 2 JEFF MARTINEZ **Equipment ID** VE BiD RPCK

---General---

Rigid Liner Present? No **Liner Type** NO LINER **Closure Method** No Bags

Liner Punctured? Yes **Layers Of Confinement** 0 **Fill Factor** 80 % **Liner Lid Present** No

---Liquids---

Liquids Present? No **Comment**

Liquid Between Liner and Drum 0 pints **Other Liquids** 0 pints

Containerized Liquid pints **Total Liquid Amount** 0 pints

Internal Container with Liquid 0 pints

Internal Container with Liquid No

Prohibited Liquids Present No

Containerized Liquid

---Contents---

Sharp Objects? No **Are Sharp Objects Protected?** Yes

	Value	*Comment*
Prohibited Compressed Gas Present?	No	
Explosives Present?	No	
Pyrophorics Present?	No	
Mercury Present?	No	
PCBs Present?	No	
PCB Mass (lbs)	0	
Wet Cell Batteries Present?	No	
Corrosives,Ignitables or Reactives Present?	No	
Beryllium Contaminates Present?	No	
Hazardous-Only Waste Present?	No	
Is Waste Incompatible with backfill, packaging materials, or shipping container materials?	No	
Sealed Containers Over 4L?	No	

---IDC Verification---

Is IDC correct? Yes **Recommended IDC** -

IDC Change Reason

Visual Exam Comment Remaining waste by weight percent is misc. plastics, plastic bags and bubble suits

Batch Id VEB13-00518 **Container Id** 10503291 **Analysis Id** 0000313190

Source Container

Is there a source container? Yes

Source Container ID	Location	IDC
10498834	destroyed @ 676- BXI/15	RF-760

IDC CODES

Current Container IDC Code: BN-508 **Recommended IDC Code:** -

Waste Material Items

Packaging Materials

Material Item	Quantity	Unit	Unit Wt	Item Wt(lbs)

Waste Items by Weight

Material Item	Quantity	Unit	Unit Wt	Item Wt(lbs)

Waste Items by Volume

Material Item	Quantity	Unit	Unit Wt	Item Wt(lbs)
Rubber	1.000	PINTS	1.554	1.550

Waste Parameters

Waste Parameter	Remaining Weight %	Actual Weight Lbs
Iron-based Metals/Alloys	0.000	0.000
Aluminum-based Metals/Alloys	0.000	0.000
Other metals	0.000	0.000
Other Inorganic Materials	0.000	0.000
Cellulosics	0.000	0.000
Rubber	0.000	1.550
Plastic (Waste Materials)	100.000	40.805
Inorganic matrix	0.000	0.000
Organic matrix	0.000	0.000
Soils/gravel	0.000	0.000
Steel (packaging materials)	0.000	26.000
Plastic (packaging materials)	0.000	0.000
Cellulosics Packaging	0.000	0.000

Esignature History

Esig Approval Id	User Id	E-signature Date	Comment
2653432	MREIDER	12-NOV-13 21:02:24	
2653433	JMARTINEZ	12-NOV-13 21:02:26	

Batch Id VEB13-00518 **Container Id** 10503297 **Analysis Id** 0000313191

VE Date 12-NOV-13 21:39:52 **Analysis Status** Pass

Gen-IDC Code BN-508 AMWTP Newly Generated Debris **VE Weight** 72.77 lbs.

Closure Date 12-NOV-13 21:39:52 **Procedure Id** INST-FOI-17 **Net Weight** 46.77 lbs.

Container Type 55 **Revision** 27

Operator 1 MIKE REIDER **Waste Matrix** S5490 **Summary Category Group** S5000

Operator 2 JEFFREY K BAILEY **Equipment ID** VE BiD RPCK

General

Rigid Liner Present? No **Liner Type** NO LINER **Closure Method** No Bags

Liner Punctured? Yes **Layers Of Confinement** 0 **Fill Factor** 75 % **Liner Lid Present** No

Liquids

Liquids Present? No **Comment**

Liquid Between Liner and Drum 0 pints **Other Liquids** 0 pints

Containerized Liquid pints **Total Liquid Amount** 0 pints

Internal Container with Liquid 0 pints

Internal Container with Liquid No

Prohibited Liquids Present No

Containerized Liquid

Contents

Sharp Objects? No **Are Sharp Objects Protected?** Yes

	Value	*Comment*
Prohibited Compressed Gas Present?	No	
Explosives Present?	No	
Pyrophorics Present?	No	
Mercury Present?	No	
PCBs Present?	No	
PCB Mass (lbs)	0	
Wet Cell Batteries Present?	No	
Corrosives,Ignitables or Reactives Present?	No	
Beryllium Contaminates Present?	No	
Hazardous-Only Waste Present?	No	
Is Waste Incompatible with backfill, packaging materials, or shipping container materials?	No	
Sealed Containers Over 4L?	No	

IDC Verification

Is IDC correct? Yes **Recommended IDC** -

IDC Change Reason

Visual Exam Comment Remaining waste by weight percent is misc. plastics, plastic bags and bubble suits

VE Boxline and Repackaging Report

Batch Id VEB13-00518 **Container Id** 10503297 **Analysis Id** 0000313191

Source Container

Is there a source container? Yes

Source Container ID	Location	IDC
10498834	destroyed @ 676- BXI/15	RF-760

IDC CODES

Current Container IDC Code: BN-508 **Recommended IDC Code:** -

Waste Material Items

Packaging Materials

Material Item	Quantity	Unit	Unit Wt	Item Wt(lbs)

Waste Items by Weight

Material Item	Quantity	Unit	Unit Wt	Item Wt(lbs)

Waste Items by Volume

Material Item	Quantity	Unit	Unit Wt	Item Wt(lbs)
Rubber	1.000	PINTS	1.554	1.550
Cloth Material	1.000	PINTS	2.000	2.000

Waste Parameters

Waste Parameter	Remaining Weight %	Actual Weight Lbs
Iron-based Metals/Alloys	0.000	0.000
Aluminum-based Metals/Alloys	0.000	0.000
Other metals	0.000	0.000
Other Inorganic Materials	0.000	0.000
Cellulosics	0.000	2.000
Rubber	0.000	1.550
Plastic (Waste Materials)	100.000	43.215
Inorganic matrix	0.000	0.000
Organic matrix	0.000	0.000
Soils/gravel	0.000	0.000
Steel (packaging materials)	0.000	26.000
Plastic (packaging materials)	0.000	0.000
Cellulosics Packaging	0.000	0.000

Esignature History

Esig Approval Id	User Id	E-signature Date	Comment
2653434	MREIDER	12-NOV-13 21:39:52	
2653435	JBAILEY	12-NOV-13 21:39:55	

Batch Id VEB13-00518 **Container Id** 10503292 **Analysis Id** 0000313192

VE Date 12-NOV-13 21:51:11 **Analysis Status** Pass

Gen-IDC Code BN-508 AMWTP Newly Generated Debris **VE Weight** 77.18 lbs.

Closure Date 12-NOV-13 21:51:11 **Procedure Id** INST-FOI-17 **Net Weight** 51.18 lbs.

Container Type 55 **Revision** 27

Operator 1 MIKE REIDER **Waste Matrix** S5490 **Summary Category Group** S5000

Operator 2 JEFFREY K BAILEY **Equipment ID** VE BiD RPCK

General

Rigid Liner Present? No **Liner Type** NO LINER **Closure Method** No Bags

Liner Punctured? Yes **Layers Of Confinement** 0 **Fill Factor** 75 % **Liner Lid Present** No

Liquids

Liquids Present? No **Comment**

Liquid Between Liner and Drum 0 pints **Other Liquids** 0 pints

Containerized Liquid pints **Total Liquid Amount** 0 pints

Internal Container with Liquid 0 pints

Internal Container with Liquid No

Prohibited Liquids Present No

Containerized Liquid

Contents

Sharp Objects? No **Are Sharp Objects Protected?** Yes

	Value	*Comment*
Prohibited Compressed Gas Present?	No	
Explosives Present?	No	
Pyrophorics Present?	No	
Mercury Present?	No	
PCBs Present?	No	
PCB Mass (lbs)	0	
Wet Cell Batteries Present?	No	
Corrosives,Ignitables or Reactives Present?	No	
Beryllium Contaminates Present?	No	
Hazardous-Only Waste Present?	No	
Is Waste Incompatible with backfill, packaging materials, or shipping container materials?	No	
Sealed Containers Over 4L?	No	

IDC Verification

Is IDC correct? Yes **Recommended IDC** -

IDC Change Reason

Visual Exam Comment Remaining waste by weight percent is plastic consisting of bubble suits, plastic bags and other misc. plastic debris.

Batch Id VEB13-00518 **Container Id** 10503292 **Analysis Id** 0000313192

Source Container

Is there a source container? Yes

Source Container ID	Location	IDC
10498834	destroyed @ 676- BXI/15	RF-760

IDC CODES

Current Container IDC Code: BN-508 **Recommended IDC Code:** -

Waste Material Items

Packaging Materials

Material Item	Quantity	Unit	Unit Wt	Item Wt(lbs)

Waste Items by Weight

Material Item	Quantity	Unit	Unit Wt	Item Wt(lbs)

Waste Items by Volume

Material Item	Quantity	Unit	Unit Wt	Item Wt(lbs)
Rubber	2.000	PINTS	1.554	3.110
Cloth Material	1.000	PINTS	2.000	2.000

Waste Parameters

Waste Parameter	Remaining Weight %	Actual Weight Lbs
Iron-based Metals/Alloys	0.000	0.000
Aluminum-based Metals/Alloys	0.000	0.000
Other metals	0.000	0.000
Other Inorganic Materials	0.000	0.000
Cellulosics	0.000	2.000
Rubber	0.000	3.110
Plastic (Waste Materials)	100.000	46.065
Inorganic matrix	0.000	0.000
Organic matrix	0.000	0.000
Soils/gravel	0.000	0.000
Steel (packaging materials)	0.000	26.000
Plastic (packaging materials)	0.000	0.000
Cellulosics Packaging	0.000	0.000

Esignature History

Esig Approval Id	User Id	E-signature Date	Comment
2653436	MREIDER	12-NOV-13 21:51:12	
2653437	JBAILEY	12-NOV-13 21:51:14	

Batch Id VEB13-00518 **Container Id** 10503295 **Analysis Id** 0000313193

VE Date 12-NOV-13 22:05:44 **Analysis Status** Pass

Gen-IDC Code BN-508 AMWTP Newly Generated Debris **VE Weight** 90.41 lbs.

Closure Date 12-NOV-13 22:05:44 **Procedure Id** INST-FOI-17 **Net Weight** 64.41 lbs.

Container Type 55 **Revision** 27

Operator 1 MIKE REIDER **Waste Matrix** S5490 **Summary Category Group** S5000

Operator 2 JEFFREY K BAILEY **Equipment ID** VE BiD RPCK

---General---

Rigid Liner Present? No **Liner Type** NO LINER **Closure Method** No Bags

Liner Punctured? Yes **Layers Of Confinement** 0 **Fill Factor** 75 % **Liner Lid Present** No

---Liquids---

Liquids Present? No **Comment**

Liquid Between Liner and Drum 0 pints **Other Liquids** 0 pints

Containerized Liquid pints **Total Liquid Amount** 0 pints

Internal Container with Liquid 0 pints

Internal Container with Liquid No

Prohibited Liquids Present No

Containerized Liquid

---Contents---

Sharp Objects? No **Are Sharp Objects Protected?** Yes

	Value	*Comment*
Prohibited Compressed Gas Present?	No	
Explosives Present?	No	
Pyrophorics Present?	No	
Mercury Present?	No	
PCBs Present?	No	
PCB Mass (lbs)	0	
Wet Cell Batteries Present?	No	
Corrosives,Ignitables or Reactives Present?	No	
Beryllium Contaminates Present?	No	
Hazardous-Only Waste Present?	No	
Is Waste Incompatible with backfill, packaging materials, or shipping container materials?	No	
Sealed Containers Over 4L?	No	

---IDC Verification---

Is IDC correct? Yes **Recommended IDC** -

IDC Change Reason

Visual Exam Comment Remaining waste by weight percent is plastic consisting of plastic airline hose, plastic bags, PPE and other misc. plastic debris.

Batch Id VEB13-00518 **Container Id** 10503295 **Analysis Id** 0000313193

Source Container

Is there a source container? Yes

Source Container ID	Location	IDC
10498834	destroyed @ 676- BXI/15	RF-760

IDC CODES

Current Container IDC Code: BN-508 **Recommended IDC Code:** -

Waste Material Items

Packaging Materials

Material Item	Quantity	Unit	Unit Wt	Item Wt(lbs)

Waste Items by Weight

Material Item	Quantity	Unit	Unit Wt	Item Wt(lbs)

Waste Items by Volume

Material Item	Quantity	Unit	Unit Wt	Item Wt(lbs)
Rubber	3.000	PINTS	1.554	4.660
Cloth Material	2.000	PINTS	2.000	4.000

Waste Parameters

Waste Parameter	Remaining Weight %	Actual Weight Lbs
Iron-based Metals/Alloys	0.000	0.000
Aluminum-based Metals/Alloys	0.000	0.000
Other metals	0.000	0.000
Other Inorganic Materials	0.000	0.000
Cellulosics	0.000	4.000
Rubber	0.000	4.660
Plastic (Waste Materials)	100.000	55.745
Inorganic matrix	0.000	0.000
Organic matrix	0.000	0.000
Soils/gravel	0.000	0.000
Steel (packaging materials)	0.000	26.000
Plastic (packaging materials)	0.000	0.000
Cellulosics Packaging	0.000	0.000

Esignature History

Esig Approval Id	User Id	E-signature Date	Comment
2653438	MREIDER	12-NOV-13 22:05:44	
2653439	JBAILEY	12-NOV-13 22:05:47	

VE Boxline and Repackaging Report

Batch Id VEB13-00518 **Container Id** 10503293 **Analysis Id** 0000313194

VE Date 12-NOV-13 22:17:10 **Analysis Status** Pass

Gen-IDC Code BN-508 AMWTP Newly Generated Debris **VE Weight** 68.36 lbs.

Closure Date 12-NOV-13 22:17:10 **Procedure Id** INST-FOI-17 **Net Weight** 42.36 lbs.

Container Type 55 **Revision** 27

Operator 1 MIKE REIDER **Waste Matrix** S5490 **Summary Category Group** S5000

Operator 2 JEFFREY K BAILEY **Equipment ID** VE BiD RPCK

General

Rigid Liner Present? No **Liner Type** NO LINER **Closure Method** No Bags

Liner Punctured? Yes **Layers Of Confinement** 0 **Fill Factor** 75 % **Liner Lid Present** No

Liquids

Liquids Present? No **Comment**

Liquid Between Liner and Drum 0 pints **Other Liquids** 0 pints

Containerized Liquid pints **Total Liquid Amount** 0 pints

Internal Container with Liquid 0 pints

Internal Container with Liquid No

Prohibited Liquids Present No

Containerized Liquid

Contents

Sharp Objects? No **Are Sharp Objects Protected?** Yes

	Value	*Comment*
Prohibited Compressed Gas Present?	No	
Explosives Present?	No	
Pyrophorics Present?	No	
Mercury Present?	No	
PCBs Present?	No	
PCB Mass (lbs)	0	
Wet Cell Batteries Present?	No	
Corrosives,Ignitables or Reactives Present?	No	
Beryllium Contaminates Present?	No	
Hazardous-Only Waste Present?	No	
Is Waste Incompatible with backfill, packaging materials, or shipping container materials?	No	
Sealed Containers Over 4L?	No	

IDC Verification

Is IDC correct? Yes **Recommended IDC -**

IDC Change Reason

Visual Exam Comment Remaining waste by weight percent is plastic consisting of plastic sheeting, plastic bags, plastic airline hose and PPE.

Batch Id VEB13-00518 **Container Id** 10503293 **Analysis Id** 0000313194

Source Container

Is there a source container? Yes

Source Container ID	Location	IDC
10498834	destroyed @ 676- BXI/15	RF-760

IDC CODES

Current Container IDC Code: BN-508 **Recommended IDC Code:** -

Waste Material Items

Packaging Materials

Material Item	Quantity	Unit	Unit Wt	Item Wt(lbs)

Waste Items by Weight

Material Item	Quantity	Unit	Unit Wt	Item Wt(lbs)

Waste Items by Volume

Material Item	Quantity	Unit	Unit Wt	Item Wt(lbs)
Rubber	2.000	PINTS	1.554	3.110

Waste Parameters

Waste Parameter	Remaining Weight %	Actual Weight Lbs
Iron-based Metals/Alloys	0.000	0.000
Aluminum-based Metals/Alloys	0.000	0.000
Other metals	0.000	0.000
Other Inorganic Materials	0.000	0.000
Cellulosics	0.000	0.000
Rubber	0.000	3.110
Plastic (Waste Materials)	100.000	39.245
Inorganic matrix	0.000	0.000
Organic matrix	0.000	0.000
Soils/gravel	0.000	0.000
Steel (packaging materials)	0.000	26.000
Plastic (packaging materials)	0.000	0.000
Cellulosics Packaging	0.000	0.000

Esignature History

Esig Approval Id	User Id	E-signature Date	Comment
2653440	MREIDER	12-NOV-13 22:17:11	
2653441	JBAILEY	12-NOV-13 22:17:13	

Batch Id VEB13-00518 **Container Id** 10503294 **Analysis Id** 0000313195

VE Date 12-NOV-13 22:27:07 **Analysis Status** Pass

Gen-IDC Code BN-508 AMWTP Newly Generated Debris **VE Weight** 94.82 lbs.

Closure Date 12-NOV-13 22:27:07 **Procedure Id** INST-FOI-17 **Net Weight** 68.82 lbs.

Container Type 55 **Revision** 27

Operator 1 MIKE REIDER **Waste Matrix** S5490 **Summary Category Group** S5000

Operator 2 JEFFREY K BAILEY **Equipment ID** VE BiD RPCK

General

Rigid Liner Present? No **Liner Type** NO LINER **Closure Method** No Bags

Liner Punctured? Yes **Layers Of Confinement** 0 **Fill Factor** 75 % **Liner Lid Present** No

Liquids

Liquids Present? No **Comment**

Liquid Between Liner and Drum 0 pints

Containerized Liquid pints

Internal Container with Liquid 0 pints

Other Liquids 0 pints

Total Liquid Amount 0 pints

Internal Container with Liquid No

Prohibited Liquids Present No

Containerized Liquid

Contents

Sharp Objects? No **Are Sharp Objects Protected?** Yes

	Value	*Comment*
Prohibited Compressed Gas Present?	No	
Explosives Present?	No	
Pyrophorics Present?	No	
Mercury Present?	No	
PCBs Present?	No	
PCB Mass (lbs)	0	
Wet Cell Batteries Present?	No	
Corrosives,Ignitables or Reactives Present?	No	
Beryllium Contaminates Present?	No	
Hazardous-Only Waste Present?	No	
Is Waste Incompatible with backfill, packaging materials, or shipping container materials?	No	
Sealed Containers Over 4L?	No	

IDC Verification

Is IDC correct? Yes **Recommended IDC** -

IDC Change Reason

Visual Exam Comment Remaining waste by weight percent is plastic consisting of bubble suits and PPE.

Batch Id VEB13-00518 **Container Id** 10503294 **Analysis Id** 0000313195

Source Container

Is there a source container? Yes

Source Container ID	Location	IDC
10498834	destroyed @ 676- BXI/15	RF-760

IDC CODES

Current Container IDC Code: BN-508 **Recommended IDC Code:** -

Waste Material Items

Packaging Materials

Material Item	Quantity	Unit	Unit Wt	Item Wt(lbs)

Waste Items by Weight

Material Item	Quantity	Unit	Unit Wt	Item Wt(lbs)

Waste Items by Volume

Material Item	Quantity	Unit	Unit Wt	Item Wt(lbs)
Rubber	2.000	PINTS	1.554	3.110

Waste Parameters

Waste Parameter	Remaining Weight %	Actual Weight Lbs
Iron-based Metals/Alloys	0.000	0.000
Aluminum-based Metals/Alloys	0.000	0.000
Other metals	0.000	0.000
Other Inorganic Materials	0.000	0.000
Cellulosics	0.000	0.000
Rubber	0.000	3.110
Plastic (Waste Materials)	100.000	65.705
Inorganic matrix	0.000	0.000
Organic matrix	0.000	0.000
Soils/gravel	0.000	0.000
Steel (packaging materials)	0.000	26.000
Plastic (packaging materials)	0.000	0.000
Cellulosics Packaging	0.000	0.000

Esignature History

Esig Approval Id	User Id	E-signature Date	Comment
2653451	MREIDER	12-NOV-13 22:27:08	
2653452	JBAILEY	12-NOV-13 22:27:10	

Batch Id VEB13-00518 **Container Id** 10506817 **Analysis Id** 0000313196

VE Date 12-NOV-13 22:37:06 **Analysis Status** Pass

Gen-IDC Code BN-508 AMWTP Newly Generated Debris **VE Weight** 99.23 lbs.

Closure Date 12-NOV-13 22:37:06 **Procedure Id** INST-FOI-17 **Net Weight** 73.23 lbs.

Container Type 55 **Revision** 27

Operator 1 MIKE REIDER **Waste Matrix** S5490 **Summary Category Group** S5000

Operator 2 JEFFREY K BAILEY **Equipment ID** VE BiD RPCK

General

Rigid Liner Present? No **Liner Type** NO LINER **Closure Method** No Bags

Liner Punctured? Yes **Layers Of Confinement** 0 **Fill Factor** 75 % **Liner Lid Present** No

Liquids

Liquids Present? No **Comment**

Liquid Between Liner and Drum 0 pints **Other Liquids** 0 pints

Containerized Liquid pints **Total Liquid Amount** 0 pints

Internal Container with Liquid 0 pints

Internal Container with Liquid No

Prohibited Liquids Present No

Containerized Liquid

Contents

Sharp Objects? Yes **Are Sharp Objects Protected?** No

	Value	*Comment*
Prohibited Compressed Gas Present?	No	
Explosives Present?	No	
Pyrophorics Present?	No	
Mercury Present?	No	
PCBs Present?	No	
PCB Mass (lbs)	0	
Wet Cell Batteries Present?	No	
Corrosives,Ignitables or Reactives Present?	No	
Beryllium Contaminates Present?	No	
Hazardous-Only Waste Present?	No	
Is Waste Incompatible with backfill, packaging materials, or shipping container materials?	No	
Sealed Containers Over 4L?	No	

IDC Verification

Is IDC correct? Yes **Recommended IDC** -

IDC Change Reason

Visual Exam Comment Remaining waste by weight percent is plastic consisting of plastic bags, bubble suites and PPE.

Batch Id VEB13-00518 **Container Id** 10506817 **Analysis Id** 0000313196

Source Container

Is there a source container? Yes

Source Container ID	Location	IDC
10498834	destroyed @ 676- BXI/15	RF-760

IDC CODES

Current Container IDC Code: BN-508 **Recommended IDC Code:** -

Waste Material Items

Packaging Materials

Material Item	Quantity	Unit	Unit Wt	Item Wt(lbs)

Waste Items by Weight

Material Item	Quantity	Unit	Unit Wt	Item Wt(lbs)

Waste Items by Volume

Material Item	Quantity	Unit	Unit Wt	Item Wt(lbs)
Rubber	3.000	PINTS	1.554	4.660
Iron	0.500	PINTS	7.807	3.900
Cloth Material	2.000	PINTS	2.000	4.000

Waste Parameters

Waste Parameter	Remaining Weight %	Actual Weight Lbs
Iron-based Metals/Alloys	0.000	3.900
Aluminum-based Metals/Alloys	0.000	0.000
Other metals	0.000	0.000
Other Inorganic Materials	0.000	0.000
Cellulosics	0.000	4.000
Rubber	0.000	4.660
Plastic (Waste Materials)	100.000	60.665
Inorganic matrix	0.000	0.000
Organic matrix	0.000	0.000
Soils/gravel	0.000	0.000
Steel (packaging materials)	0.000	26.000
Plastic (packaging materials)	0.000	0.000
Cellulosics Packaging	0.000	0.000

Esignature History

Esig Approval Id	User Id	E-signature Date	Comment
2653453	MREIDER	12-NOV-13 22:37:06	
2653454	JBAILEY	12-NOV-13 22:37:09	

Batch Id VEB13-00518 **Container Id** 10506808 **Analysis Id** 0000313197

VE Date 12-NOV-13 22:49:14 **Analysis Status** Pass

Gen-IDC Code BN-508 AMWTP Newly Generated Debris **VE Weight** 81.59 lbs.

Closure Date 12-NOV-13 22:49:14 **Procedure Id** INST-FOI-17 **Net Weight** 55.59 lbs.

Container Type 55 **Revision** 27

Operator 1 MIKE REIDER **Waste Matrix** S5490 **Summary Category Group** S5000

Operator 2 JEFFREY K BAILEY **Equipment ID** VE BiD RPCK

---General---

Rigid Liner Present? No **Liner Type** NO LINER **Closure Method** No Bags

Liner Punctured? Yes **Layers Of Confinement** 0 **Fill Factor** 75 % **Liner Lid Present** No

---Liquids---

Liquids Present? No **Comment**

Liquid Between Liner and Drum 0 pints **Other Liquids** 0 pints

Containerized Liquid pints **Total Liquid Amount** 0 pints

Internal Container with Liquid 0 pints

Internal Container with Liquid No

Prohibited Liquids Present No

Containerized Liquid

---Contents---

Sharp Objects? No **Are Sharp Objects Protected?** Yes

	Value	*Comment*
Prohibited Compressed Gas Present?	No	
Explosives Present?	No	
Pyrophorics Present?	No	
Mercury Present?	No	
PCBs Present?	No	
PCB Mass (lbs)	0	
Wet Cell Batteries Present?	No	
Corrosives,Ignitables or Reactives Present?	No	
Beryllium Contaminates Present?	No	
Hazardous-Only Waste Present?	No	
Is Waste Incompatible with backfill, packaging materials, or shipping container materials?	No	
Sealed Containers Over 4L?	No	

---IDC Verification---

Is IDC correct? Yes **Recommended IDC** -

IDC Change Reason

Visual Exam Comment Remaining waste by weight percent is plastic consisting of plastic bags and PPE.

Batch Id VEB13-00518 **Container Id** 10506808 **Analysis Id** 0000313197

Source Container

Is there a source container? Yes

Source Container ID	Location	IDC
10498834	destroyed @ 676- BXI/15	RF-760

IDC CODES

Current Container IDC Code: BN-508 **Recommended IDC Code:** -

Waste Material Items

Packaging Materials

Material Item	Quantity	Unit	Unit Wt	Item Wt(lbs)

Waste Items by Weight

Material Item	Quantity	Unit	Unit Wt	Item Wt(lbs)

Waste Items by Volume

Material Item	Quantity	Unit	Unit Wt	Item Wt(lbs)
Rubber	4.000	PINTS	1.554	6.220
Cloth Material	3.000	PINTS	2.000	6.000

Waste Parameters

Waste Parameter	Remaining Weight %	Actual Weight Lbs
Iron-based Metals/Alloys	0.000	0.000
Aluminum-based Metals/Alloys	0.000	0.000
Other metals	0.000	0.000
Other Inorganic Materials	0.000	0.000
Cellulosics	0.000	6.000
Rubber	0.000	6.220
Plastic (Waste Materials)	100.000	43.365
Inorganic matrix	0.000	0.000
Organic matrix	0.000	0.000
Soils/gravel	0.000	0.000
Steel (packaging materials)	0.000	26.000
Plastic (packaging materials)	0.000	0.000
Cellulosics Packaging	0.000	0.000

Esignature History

Esig Approval Id	User Id	E-signature Date	Comment
2653455	MREIDER	12-NOV-13 22:49:15	
2653456	JBAILEY	12-NOV-13 22:49:16	

Batch Id VEB13-00518 **Container Id** 10506816 **Analysis Id** 0000313198

VE Date 12-NOV-13 22:59:56 **Analysis Status** Pass

Gen-IDC Code BN-508 AMWTP Newly Generated Debris **VE Weight** 66.15 **lbs.**

Closure Date 12-NOV-13 22:59:56 **Procedure Id** INST-FOI-17 **Net Weight** 40.15 **lbs.**

Container Type 55 **Revision** 27

Operator 1 MIKE REIDER **Waste Matrix** S5490 **Summary Category Group** S5000

Operator 2 JEFFREY K BAILEY **Equipment ID** VE BiD RPCK

General

Rigid Liner Present? No **Liner Type** NO LINER **Closure Method** No Bags

Liner Punctured? Yes **Layers Of Confinement** 0 **Fill Factor** 75 % **Liner Lid Present** No

Liquids

Liquids Present? No **Comment**

Liquid Between Liner and Drum 0 pints **Other Liquids** 0 pints

Containerized Liquid pints **Total Liquid Amount** 0 pints

Internal Container with Liquid 0 pints

Internal Container with Liquid No

Prohibited Liquids Present No

Containerized Liquid

Contents

Sharp Objects? No **Are Sharp Objects Protected?** Yes

	Value	*Comment*
Prohibited Compressed Gas Present?	No	
Explosives Present?	No	
Pyrophorics Present?	No	
Mercury Present?	No	
PCBs Present?	No	
PCB Mass (lbs)	0	
Wet Cell Batteries Present?	No	
Corrosives,Ignitables or Reactives Present?	No	
Beryllium Contaminates Present?	No	
Hazardous-Only Waste Present?	No	
Is Waste Incompatible with backfill, packaging materials, or shipping container materials?	No	
Sealed Containers Over 4L?	No	

IDC Verification

Is IDC correct? Yes **Recommended IDC** -

IDC Change Reason

Visual Exam Comment Remaining waste by weight percent is plastic consisting of plastic bags, bubble suits and PPE.

Batch Id VEB13-00518 **Container Id** 10506816 **Analysis Id** 0000313198

Source Container

Is there a source container? Yes

Source Container ID	Location	IDC
10498834	destroyed @ 676- BXI/15	RF-760

IDC CODES

Current Container IDC Code: BN-508 **Recommended IDC Code:** -

Waste Material Items

Packaging Materials

Material Item	Quantity	Unit	Unit Wt	Item Wt(lbs)

Waste Items by Weight

Material Item	Quantity	Unit	Unit Wt	Item Wt(lbs)

Waste Items by Volume

Material Item	Quantity	Unit	Unit Wt	Item Wt(lbs)
Rubber	2.000	PINTS	1.554	3.110

Waste Parameters

Waste Parameter	Remaining Weight %	Actual Weight Lbs
Iron-based Metals/Alloys	0.000	0.000
Aluminum-based Metals/Alloys	0.000	0.000
Other metals	0.000	0.000
Other Inorganic Materials	0.000	0.000
Cellulosics	0.000	0.000
Rubber	0.000	3.110
Plastic (Waste Materials)	100.000	37.040
Inorganic matrix	0.000	0.000
Organic matrix	0.000	0.000
Soils/gravel	0.000	0.000
Steel (packaging materials)	0.000	26.000
Plastic (packaging materials)	0.000	0.000
Cellulosics Packaging	0.000	0.000

Esignature History

Esig Approval Id	User Id	E-signature Date	Comment
2653457	MREIDER	12-NOV-13 22:59:57	
2653458	JBAILEY	12-NOV-13 23:00:00	

Batch Id VEB13-00518 **Container Id** 10506809 **Analysis Id** 0000313199

VE Date 12-NOV-13 23:15:07 **Analysis Status** Pass

Gen-IDC Code BN-508 AMWTP Newly Generated Debris **VE Weight** 103.64 lbs.

Closure Date 12-NOV-13 23:15:07 **Procedure Id** INST-FOI-17 **Net Weight** 77.64 lbs.

Container Type 55 **Revision** 27

Operator 1 MIKE REIDER **Waste Matrix** S5490 **Summary Category Group** S5000

Operator 2 JEFFREY K BAILEY **Equipment ID** VE BiD RPCK

General

Rigid Liner Present? No **Liner Type** NO LINER **Closure Method** No Bags

Liner Punctured? Yes **Layers Of Confinement** 0 **Fill Factor** 75 % **Liner Lid Present** No

Liquids

Liquids Present? No **Comment**

Liquid Between Liner and Drum 0 pints **Other Liquids** 0 pints

Containerized Liquid pints **Total Liquid Amount** 0 pints

Internal Container with Liquid 0 pints

Internal Container with Liquid No

Prohibited Liquids Present No

Containerized Liquid

Contents

Sharp Objects? No **Are Sharp Objects Protected?** Yes

	Value	*Comment*
Prohibited Compressed Gas Present?	No	
Explosives Present?	No	
Pyrophorics Present?	No	
Mercury Present?	No	
PCBs Present?	No	
PCB Mass (lbs)	0	
Wet Cell Batteries Present?	No	
Corrosives,Ignitables or Reactives Present?	No	
Beryllium Contaminates Present?	No	
Hazardous-Only Waste Present?	No	
Is Waste Incompatible with backfill, packaging materials, or shipping container materials?	No	
Sealed Containers Over 4L?	No	

IDC Verification

Is IDC correct? Yes **Recommended IDC** -

IDC Change Reason

Visual Exam Comment Remaining waste by weight percent is plastic consisting of plastic airline hose, plastic bags and PPE.

Batch Id VEB13-00518 **Container Id** 10506809 **Analysis Id** 0000313199

Source Container

Is there a source container? Yes

Source Container ID	Location	IDC
10498834	destroyed @ 676- BXI/15	RF-760

IDC CODES

Current Container IDC Code: BN-508 **Recommended IDC Code:** -

Waste Material Items

Packaging Materials

Material Item	Quantity	Unit	Unit Wt	Item Wt(lbs)

Waste Items by Weight

Material Item	Quantity	Unit	Unit Wt	Item Wt(lbs)

Waste Items by Volume

Material Item	Quantity	Unit	Unit Wt	Item Wt(lbs)
Rubber	3.000	PINTS	1.554	4.660
Cloth Material	3.000	PINTS	2.000	6.000

Waste Parameters

Waste Parameter	Remaining Weight %	Actual Weight Lbs
Iron-based Metals/Alloys	0.000	0.000
Aluminum-based Metals/Alloys	0.000	0.000
Other metals	0.000	0.000
Other Inorganic Materials	0.000	0.000
Cellulosics	0.000	6.000
Rubber	0.000	4.660
Plastic (Waste Materials)	100.000	66.975
Inorganic matrix	0.000	0.000
Organic matrix	0.000	0.000
Soils/gravel	0.000	0.000
Steel (packaging materials)	0.000	26.000
Plastic (packaging materials)	0.000	0.000
Cellulosics Packaging	0.000	0.000

Esignature History

Esig Approval Id	User Id	E-signature Date	Comment
2653459	MREIDER	12-NOV-13 23:15:08	
2653460	JBAILEY	12-NOV-13 23:15:11	

Batch Id VEB13-00518 **Container Id** 10506815 **Analysis Id** 0000313200

VE Date 12-NOV-13 23:26:58 **Analysis Status** Pass

Gen-IDC Code BN-508 AMWTP Newly Generated Debris **VE Weight** 79.38 lbs.

Closure Date 12-NOV-13 23:26:58 **Procedure Id** INST-FOI-17 **Net Weight** 53.38 lbs.

Container Type 55 **Revision** 27

Operator 1 MIKE REIDER **Waste Matrix** S5490 **Summary Category Group** S5000

Operator 2 JEFFREY K BAILEY **Equipment ID** VE BiD RPCK

---General---

Rigid Liner Present? No **Liner Type** NO LINER **Closure Method** No Bags

Liner Punctured? Yes **Layers Of Confinement** 0 **Fill Factor** 75 % **Liner Lid Present** No

---Liquids---

Liquids Present? No **Comment**

Liquid Between Liner and Drum 0 pints

Containerized Liquid pints

Internal Container with Liquid 0 pints

Other Liquids 0 pints

Total Liquid Amount 0 pints

Internal Container with Liquid No

Prohibited Liquids Present No

Containerized Liquid

---Contents---

Sharp Objects? No **Are Sharp Objects Protected?** Yes

	Value	*Comment*
Prohibited Compressed Gas Present?	No	
Explosives Present?	No	
Pyrophorics Present?	No	
Mercury Present?	No	
PCBs Present?	No	
PCB Mass (lbs)	0	
Wet Cell Batteries Present?	No	
Corrosives,Ignitables or Reactives Present?	No	
Beryllium Contaminates Present?	No	
Hazardous-Only Waste Present?	No	
Is Waste Incompatible with backfill, packaging materials, or shipping container materials?	No	
Sealed Containers Over 4L?	No	

---IDC Verification---

Is IDC correct? Yes **Recommended IDC** -

IDC Change Reason

Visual Exam Comment Remaining waste by weight percent is plastic consisting of plastic bags and PPE.

Batch Id VEB13-00518 **Container Id** 10506815 **Analysis Id** 0000313200

Source Container

Is there a source container? Yes

Source Container ID	Location	IDC
10498834	destroyed @ 676- BXI/15	RF-760

IDC CODES

Current Container IDC Code: BN-508 **Recommended IDC Code:** -

Waste Material Items

Packaging Materials

Material Item	Quantity	Unit	Unit Wt	Item Wt(lbs)

Waste Items by Weight

Material Item	Quantity	Unit	Unit Wt	Item Wt(lbs)

Waste Items by Volume

Material Item	Quantity	Unit	Unit Wt	Item Wt(lbs)
Paper	1.000	PINTS	0.969	0.970
Rubber	2.000	PINTS	1.554	3.110
Cloth Material	3.000	PINTS	2.000	6.000

Waste Parameters

Waste Parameter	Remaining Weight %	Actual Weight Lbs
Iron-based Metals/Alloys	0.000	0.000
Aluminum-based Metals/Alloys	0.000	0.000
Other metals	0.000	0.000
Other Inorganic Materials	0.000	0.000
Cellulosics	0.000	6.970
Rubber	0.000	3.110
Plastic (Waste Materials)	100.000	43.300
Inorganic matrix	0.000	0.000
Organic matrix	0.000	0.000
Soils/gravel	0.000	0.000
Steel (packaging materials)	0.000	26.000
Plastic (packaging materials)	0.000	0.000
Cellulosics Packaging	0.000	0.000

Esignature History

Esig Approval Id	User Id	E-signature Date	Comment
2653461	MREIDER	12-NOV-13 23:26:59	
2653462	JBAILEY	12-NOV-13 23:27:02	

Batch Id VEB13-00518 **Container Id** 10506806 **Analysis Id** 0000313207

VE Date 13-NOV-13 09:50:36 **Analysis Status** Pass

Gen-IDC Code BN-508 AMWTP Newly Generated Debris **VE Weight** 72.77 lbs.

Closure Date 13-NOV-13 09:50:36 **Procedure Id** INST-FOI-17 **Net Weight** 46.77 lbs.

Container Type 55 **Revision** 27

Operator 1 ROBERT PURCELL **Waste Matrix** S5490 **Summary Category Group** S5000

Operator 2 TIM OZBURN **Equipment ID** VE BiD RPCK

General

Rigid Liner Present? No **Liner Type** NO LINER **Closure Method** No Bags

Liner Punctured? Yes **Layers Of Confinement** 0 **Fill Factor** 65 % **Liner Lid Present** No

Liquids

Liquids Present? No **Comment**

Liquid Between Liner and Drum 0 pints **Other Liquids** 0 pints

Containerized Liquid pints **Total Liquid Amount** 0 pints

Internal Container with Liquid 0 pints

Internal Container with Liquid No

Prohibited Liquids Present No

Containerized Liquid

Contents

Sharp Objects? No **Are Sharp Objects Protected?** Yes

	Value	*Comment*
Prohibited Compressed Gas Present?	No	
Explosives Present?	No	
Pyrophorics Present?	No	
Mercury Present?	No	
PCBs Present?	No	
PCB Mass (lbs)	0	
Wet Cell Batteries Present?	No	
Corrosives,Ignitables or Reactives Present?	No	
Beryllium Contaminates Present?	No	
Hazardous-Only Waste Present?	No	
Is Waste Incompatible with backfill, packaging materials, or shipping container materials?	No	
Sealed Containers Over 4L?	No	

IDC Verification

Is IDC correct? Yes **Recommended IDC** -

IDC Change Reason

Visual Exam Comment Remaining waste by weight percent is Plastic (Waste Materials) consisting of Bubble suits, PPE, plastic bags, and plastic sheeting.

Batch Id VEB13-00518 **Container Id** 10506806 **Analysis Id** 0000313207

Source Container

Is there a source container? Yes

Source Container ID	Location	IDC
10498834	destroyed @ 676- BXI/15	RF-760

IDC CODES

Current Container IDC Code: BN-508 **Recommended IDC Code:** -

Waste Material Items

Packaging Materials

Material Item	Quantity	Unit	Unit Wt	Item Wt(lbs)

Waste Items by Weight

Material Item	Quantity	Unit	Unit Wt	Item Wt(lbs)

Waste Items by Volume

Material Item	Quantity	Unit	Unit Wt	Item Wt(lbs)
Rubber	1.000	PINTS	1.554	1.550

Waste Parameters

Waste Parameter	Remaining Weight %	Actual Weight Lbs
Iron-based Metals/Alloys	0.000	0.000
Aluminum-based Metals/Alloys	0.000	0.000
Other metals	0.000	0.000
Other Inorganic Materials	0.000	0.000
Cellulosics	0.000	0.000
Rubber	0.000	1.550
Plastic (Waste Materials)	100.000	45.215
Inorganic matrix	0.000	0.000
Organic matrix	0.000	0.000
Soils/gravel	0.000	0.000
Steel (packaging materials)	0.000	26.000
Plastic (packaging materials)	0.000	0.000
Cellulosics Packaging	0.000	0.000

Esignature History

Esig Approval Id	User Id	E-signature Date	Comment
2653675	RPURCELL	13-NOV-13 09:50:37	
2653676	TOZBURN	13-NOV-13 09:50:46	

Batch Id VEB13-00518 **Container Id** 10506814 **Analysis Id** 0000313208

VE Date 13-NOV-13 10:04:08 **Analysis Status** Pass

Gen-IDC Code BN-508 AMWTP Newly Generated Debris **VE Weight** 81.59 lbs.

Closure Date 13-NOV-13 10:04:08 **Procedure Id** INST-FOI-17 **Net Weight** 55.59 lbs.

Container Type 55 **Revision** 27

Operator 1 ROBERT PURCELL **Waste Matrix** S5490 **Summary Category Group** S5000

Operator 2 TIM OZBURN **Equipment ID** VE BiD RPCK

General

Rigid Liner Present? No **Liner Type** NO LINER **Closure Method** No Bags

Liner Punctured? Yes **Layers Of Confinement** 0 **Fill Factor** 60 % **Liner Lid Present** No

Liquids

Liquids Present? No **Comment**

Liquid Between Liner and Drum 0 pints **Other Liquids** 0 pints

Containerized Liquid pints **Total Liquid Amount** 0 pints

Internal Container with Liquid 0 pints

Internal Container with Liquid No

Prohibited Liquids Present No

Containerized Liquid

Contents

Sharp Objects? Yes **Are Sharp Objects Protected?** No

	Value	*Comment*
Prohibited Compressed Gas Present?	No	
Explosives Present?	No	
Pyrophorics Present?	No	
Mercury Present?	No	
PCBs Present?	No	
PCB Mass (lbs)	0	
Wet Cell Batteries Present?	No	
Corrosives,Ignitables or Reactives Present?	No	
Beryllium Contaminates Present?	No	
Hazardous-Only Waste Present?	No	
Is Waste Incompatible with backfill, packaging materials, or shipping container materials?	No	
Sealed Containers Over 4L?	No	

IDC Verification

Is IDC correct? Yes **Recommended IDC** -

IDC Change Reason

Visual Exam Comment Remaining waste by weight percent is Plastic (Waste Materials) consisting of Bubble suits, PPE, plastic bags, airline hoses, and plastic sheeting.

Batch Id VEB13-00518 **Container Id** 10506814 **Analysis Id** 0000313208

Source Container

Is there a source container? Yes

Source Container ID	Location	IDC
10498834	destroyed @ 676- BXI/15	RF-760

IDC CODES

Current Container IDC Code: BN-508 **Recommended IDC Code:** -

Waste Material Items

Packaging Materials

Material Item	Quantity	Unit	Unit Wt	Item Wt(lbs)

Waste Items by Weight

Material Item	Quantity	Unit	Unit Wt	Item Wt(lbs)

Waste Items by Volume

Material Item	Quantity	Unit	Unit Wt	Item Wt(lbs)
Iron	0.150	PINTS	7.807	1.170

Waste Parameters

Waste Parameter	Remaining Weight %	Actual Weight Lbs
Iron-based Metals/Alloys	0.000	1.170
Aluminum-based Metals/Alloys	0.000	0.000
Other metals	0.000	0.000
Other Inorganic Materials	0.000	0.000
Cellulosics	0.000	0.000
Rubber	0.000	0.000
Plastic (Waste Materials)	100.000	54.415
Inorganic matrix	0.000	0.000
Organic matrix	0.000	0.000
Soils/gravel	0.000	0.000
Steel (packaging materials)	0.000	26.000
Plastic (packaging materials)	0.000	0.000
Cellulosics Packaging	0.000	0.000

Esignature History

Esig Approval Id	User Id	E-signature Date	Comment
2653697	RPURCELL	13-NOV-13 10:04:08	
2653698	TOZBURN	13-NOV-13 10:04:10	

Batch Id VEB13-00518 **Container Id** 10506807 **Analysis Id** 0000313209

VE Date 13-NOV-13 10:16:06 **Analysis Status** Pass

Gen-IDC Code BN-508 AMWTP Newly Generated Debris **VE Weight** 97.02 lbs.

Closure Date 13-NOV-13 10:16:06 **Procedure Id** INST-FOI-17 **Net Weight** 71.02 lbs.

Container Type 55 **Revision** 27

Operator 1 ROBERT PURCELL **Waste Matrix** S5490 **Summary Category Group** S5000

Operator 2 TIM OZBURN **Equipment ID** VE BiD RPCK

General

Rigid Liner Present? No **Liner Type** NO LINER **Closure Method** No Bags

Liner Punctured? Yes **Layers Of Confinement** 0 **Fill Factor** 60 % **Liner Lid Present** No

Liquids

Liquids Present? No **Comment**

Liquid Between Liner and Drum 0 pints **Other Liquids** 0 pints

Containerized Liquid pints **Total Liquid Amount** 0 pints

Internal Container with Liquid 0 pints

Internal Container with Liquid No

Prohibited Liquids Present No

Containerized Liquid

Contents

Sharp Objects? Yes **Are Sharp Objects Protected?** No

	Value	*Comment*
Prohibited Compressed Gas Present?	No	
Explosives Present?	No	
Pyrophorics Present?	No	
Mercury Present?	No	
PCBs Present?	No	
PCB Mass (lbs)	0	
Wet Cell Batteries Present?	No	
Corrosives,Ignitables or Reactives Present?	No	
Beryllium Contaminates Present?	No	
Hazardous-Only Waste Present?	No	
Is Waste Incompatible with backfill, packaging materials, or shipping container materials?	No	
Sealed Containers Over 4L?	No	

IDC Verification

Is IDC correct? Yes **Recommended IDC** -

IDC Change Reason

Visual Exam Comment Remaining waste by weight percent is Plastic (Waste Materials) consisting of Bubble suits, PPE, plastic bags, and plastic sheeting.

Batch Id VEB13-00518 **Container Id** 10506807 **Analysis Id** 0000313209

Source Container

Is there a source container? Yes

Source Container ID	Location	IDC
10498834	destroyed @ 676- BXI/15	RF-760

IDC CODES

Current Container IDC Code: BN-508 **Recommended IDC Code:** -

Waste Material Items

Packaging Materials

Material Item	Quantity	Unit	Unit Wt	Item Wt(lbs)

Waste Items by Weight

Material Item	Quantity	Unit	Unit Wt	Item Wt(lbs)

Waste Items by Volume

Material Item	Quantity	Unit	Unit Wt	Item Wt(lbs)
Rubber	0.500	PINTS	1.554	0.780
Iron	1.500	PINTS	7.807	11.710

Waste Parameters

Waste Parameter	Remaining Weight %	Actual Weight Lbs
Iron-based Metals/Alloys	0.000	11.710
Aluminum-based Metals/Alloys	0.000	0.000
Other metals	0.000	0.000
Other Inorganic Materials	0.000	0.000
Cellulosics	0.000	0.000
Rubber	0.000	0.780
Plastic (Waste Materials)	100.000	58.530
Inorganic matrix	0.000	0.000
Organic matrix	0.000	0.000
Soils/gravel	0.000	0.000
Steel (packaging materials)	0.000	26.000
Plastic (packaging materials)	0.000	0.000
Cellulosics Packaging	0.000	0.000

Esignature History

Esig Approval Id	User Id	E-signature Date	Comment
2653722	RPURCELL	13-NOV-13 10:16:06	
2653723	TOZBURN	13-NOV-13 10:16:08	

Batch Id VEB13-00518 **Container Id** 10506813 **Analysis Id** 0000313210

VE Date 13-NOV-13 10:32:08 **Analysis Status** Pass

Gen-IDC Code BN-508 AMWTP Newly Generated Debris **VE Weight** 72.77 lbs.

Closure Date 13-NOV-13 10:32:08 **Procedure Id** INST-FOI-17 **Net Weight** 46.77 lbs.

Container Type 55 **Revision** 27

Operator 1 ROBERT PURCELL **Waste Matrix** S5490 **Summary Category Group** S5000

Operator 2 TIM OZBURN **Equipment ID** VE BiD RPCK

General

Rigid Liner Present? No **Liner Type** NO LINER **Closure Method** No Bags

Liner Punctured? Yes **Layers Of Confinement** 0 **Fill Factor** 55 % **Liner Lid Present** No

Liquids

Liquids Present? No **Comment**

Liquid Between Liner and Drum 0 pints **Other Liquids** 0 pints

Containerized Liquid pints **Total Liquid Amount** 0 pints

Internal Container with Liquid 0 pints

Internal Container with Liquid No

Prohibited Liquids Present No

Containerized Liquid

Contents

Sharp Objects? Yes **Are Sharp Objects Protected?** No

	Value	*Comment*
Prohibited Compressed Gas Present?	No	
Explosives Present?	No	
Pyrophorics Present?	No	
Mercury Present?	No	
PCBs Present?	No	
PCB Mass (lbs)	0	
Wet Cell Batteries Present?	No	
Corrosives,Ignitables or Reactives Present?	No	
Beryllium Contaminates Present?	No	
Hazardous-Only Waste Present?	No	
Is Waste Incompatible with backfill, packaging materials, or shipping container materials?	No	
Sealed Containers Over 4L?	No	

IDC Verification

Is IDC correct? Yes **Recommended IDC** -

IDC Change Reason

Visual Exam Comment Remaining waste by weight percent is Plastic (Waste Materials) consisting of Bubble suits, PPE, plastic bags, and plastic sheeting.

Batch Id VEB13-00518 **Container Id** 10506813 **Analysis Id** 0000313210

Source Container

Is there a source container? Yes

Source Container ID	Location	IDC
10498834	destroyed @ 676- BXI/15	RF-760

IDC CODES

Current Container IDC Code: BN-508 **Recommended IDC Code:** -

Waste Material Items

Packaging Materials

Material Item	Quantity	Unit	Unit Wt	Item Wt(lbs)

Waste Items by Weight

Material Item	Quantity	Unit	Unit Wt	Item Wt(lbs)
D-cell Battery	1.000	EACH	0.250	0.250

Waste Items by Volume

Material Item	Quantity	Unit	Unit Wt	Item Wt(lbs)
Rubber	1.000	PINTS	1.554	1.550
Iron	0.500	PINTS	7.807	3.900

Waste Parameters

Waste Parameter	Remaining Weight %	Actual Weight Lbs
Iron-based Metals/Alloys	0.000	3.900
Aluminum-based Metals/Alloys	0.000	0.000
Other metals	0.000	0.250
Other Inorganic Materials	0.000	0.000
Cellulosics	0.000	0.000
Rubber	0.000	1.550
Plastic (Waste Materials)	100.000	41.065
Inorganic matrix	0.000	0.000
Organic matrix	0.000	0.000
Soils/gravel	0.000	0.000
Steel (packaging materials)	0.000	26.000
Plastic (packaging materials)	0.000	0.000
Cellulosics Packaging	0.000	0.000

Esignature History

Esig Approval Id	User Id	E-signature Date	Comment
2653744	RPURCELL	13-NOV-13 10:32:09	
2653745	TOZBURN	13-NOV-13 10:32:14	

Batch Id VEB13-00518 **Container Id** 10506804 **Analysis Id** 0000313211

VE Date 13-NOV-13 10:49:12 **Analysis Status** Pass

Gen-IDC Code BN-508 AMWTP Newly Generated Debris **VE Weight** 152.15 lbs.

Closure Date 13-NOV-13 10:49:12 **Procedure Id** INST-FOI-17 **Net Weight** 126.15 lbs.

Container Type 55 **Revision** 27

Operator 1 ROBERT PURCELL **Waste Matrix** S5490 **Summary Category Group** S5000

Operator 2 TIM OZBURN **Equipment ID** VE BiD RPCK

General

Rigid Liner Present? No **Liner Type** NO LINER **Closure Method** No Bags

Liner Punctured? Yes **Layers Of Confinement** 0 **Fill Factor** 60 % **Liner Lid Present** No

Liquids

Liquids Present? No **Comment**

Liquid Between Liner and Drum 0 pints **Other Liquids** 0 pints

Containerized Liquid pints **Total Liquid Amount** 0 pints

Internal Container with Liquid 0 pints

Internal Container with Liquid No

Prohibited Liquids Present No

Containerized Liquid

Contents

Sharp Objects? Yes **Are Sharp Objects Protected?** No

	Value	*Comment*
Prohibited Compressed Gas Present?	No	
Explosives Present?	No	
Pyrophorics Present?	No	
Mercury Present?	No	
PCBs Present?	No	
PCB Mass (lbs)	0	
Wet Cell Batteries Present?	No	
Corrosives,Ignitables or Reactives Present?	No	
Beryllium Contaminates Present?	No	
Hazardous-Only Waste Present?	No	
Is Waste Incompatible with backfill, packaging materials, or shipping container materials?	No	
Sealed Containers Over 4L?	No	

IDC Verification

Is IDC correct? Yes **Recommended IDC** -

IDC Change Reason

Visual Exam Comment Remaining waste by weight percent is Plastic (Waste Materials) consisting of Bubble suits, PPE, plastic bags, and plastic sheeting.

VE Boxline and Repackaging Report

Batch Id VEB13-00518 **Container Id** 10506804 **Analysis Id** 0000313211

Source Container

Is there a source container? Yes

Source Container ID	Location	IDC
10498834	destroyed @ 676- BXI/15	RF-760

IDC CODES

Current Container IDC Code: BN-508 **Recommended IDC Code:** -

Waste Material Items

Packaging Materials

Material Item	Quantity	Unit	Unit Wt	Item Wt(lbs)

Waste Items by Weight

Material Item	Quantity	Unit	Unit Wt	Item Wt(lbs)

Waste Items by Volume

Material Item	Quantity	Unit	Unit Wt	Item Wt(lbs)
Rubber	1.000	PINTS	1.554	1.550
Glass	0.500	PINTS	2.082	1.040
Iron	2.000	PINTS	7.807	15.610

Waste Parameters

Waste Parameter	Remaining Weight %	Actual Weight Lbs
Iron-based Metals/Alloys	0.000	15.610
Aluminum-based Metals/Alloys	0.000	0.000
Other metals	0.000	0.000
Other Inorganic Materials	0.000	1.040
Cellulosics	0.000	0.000
Rubber	0.000	1.550
Plastic (Waste Materials)	100.000	107.945
Inorganic matrix	0.000	0.000
Organic matrix	0.000	0.000
Soils/gravel	0.000	0.000
Steel (packaging materials)	0.000	26.000
Plastic (packaging materials)	0.000	0.000
Cellulosics Packaging	0.000	0.000

Esignature History

Esig Approval Id	User Id	E-signature Date	Comment
2653785	RPURCELL	13-NOV-13 10:49:13	
2653787	TOZBURN	13-NOV-13 10:49:17	

Batch Id VEB13-00518 **Container Id** 10506812 **Analysis Id** 0000313212

VE Date 13-NOV-13 11:00:28 **Analysis Status** Pass

Gen-IDC Code BN-508 AMWTP Newly Generated Debris **VE Weight** 110.25 lbs.

Closure Date 13-NOV-13 11:00:28 **Procedure Id** INST-FOI-17 **Net Weight** 84.25 lbs.

Container Type 55 **Revision** 27

Operator 1 ROBERT PURCELL **Waste Matrix** S5490 **Summary Category Group** S5000

Operator 2 TIM OZBURN **Equipment ID** VE BiD RPCK

General

Rigid Liner Present? No **Liner Type** NO LINER **Closure Method** No Bags

Liner Punctured? Yes **Layers Of Confinement** 0 **Fill Factor** 55 % **Liner Lid Present** No

Liquids

Liquids Present? No **Comment**

Liquid Between Liner and Drum 0 pints **Other Liquids** 0 pints

Containerized Liquid pints **Total Liquid Amount** 0 pints

Internal Container with Liquid 0 pints

Internal Container with Liquid No

Prohibited Liquids Present No

Containerized Liquid

Contents

Sharp Objects? Yes **Are Sharp Objects Protected?** No

	Value	*Comment*
Prohibited Compressed Gas Present?	No	
Explosives Present?	No	
Pyrophorics Present?	No	
Mercury Present?	No	
PCBs Present?	No	
PCB Mass (lbs)	0	
Wet Cell Batteries Present?	No	
Corrosives,Ignitables or Reactives Present?	No	
Beryllium Contaminates Present?	No	
Hazardous-Only Waste Present?	No	
Is Waste Incompatible with backfill, packaging materials, or shipping container materials?	No	
Sealed Containers Over 4L?	No	

IDC Verification

Is IDC correct? Yes **Recommended IDC** -

IDC Change Reason

Visual Exam Comment Remaining waste by weight percent is Plastic (Waste Materials) consisting of Bubble suits, PPE, plastic bags, and plastic sheeting.

VE Boxline and Repackaging Report

Batch Id VEB13-00518 **Container Id** 10506812 **Analysis Id** 0000313212

Source Container

Is there a source container? Yes

Source Container ID	Location	IDC
10498834	destroyed @ 676- BXI/15	RF-760

IDC CODES

Current Container IDC Code: BN-508 **Recommended IDC Code:** -

Waste Material Items

Packaging Materials

Material Item	Quantity	Unit	Unit Wt	Item Wt(lbs)

Waste Items by Weight

Material Item	Quantity	Unit	Unit Wt	Item Wt(lbs)

Waste Items by Volume

Material Item	Quantity	Unit	Unit Wt	Item Wt(lbs)
Rubber	1.000	PINTS	1.554	1.550
Cardboard	0.500	PINTS	0.833	0.420
Iron	1.000	PINTS	7.807	7.810

Waste Parameters

Waste Parameter	Remaining Weight %	Actual Weight Lbs
Iron-based Metals/Alloys	0.000	7.810
Aluminum-based Metals/Alloys	0.000	0.000
Other metals	0.000	0.000
Other Inorganic Materials	0.000	0.000
Cellulosics	0.000	0.420
Rubber	0.000	1.550
Plastic (Waste Materials)	100.000	74.470
Inorganic matrix	0.000	0.000
Organic matrix	0.000	0.000
Soils/gravel	0.000	0.000
Steel (packaging materials)	0.000	26.000
Plastic (packaging materials)	0.000	0.000
Cellulosics Packaging	0.000	0.000

Esignature History

Esig Approval Id	User Id	E-signature Date	Comment
2653799	RPURCELL	13-NOV-13 11:00:29	
2653800	TOZBURN	13-NOV-13 11:00:34	

Batch Id VEB13-00518 **Container Id** 10506805 **Analysis Id** 0000313213

VE Date 13-NOV-13 11:59:59 **Analysis Status** Pass

Gen-IDC Code BN-508 AMWTP Newly Generated Debris **VE Weight** 83.79 lbs.

Closure Date 13-NOV-13 11:59:59 **Procedure Id** INST-FOI-17 **Net Weight** 57.79 lbs.

Container Type 55 **Revision** 27

Operator 1 ROBERT PURCELL **Waste Matrix** S5490 **Summary Category Group** S5000

Operator 2 TIM OZBURN **Equipment ID** VE BiD RPCK

General

Rigid Liner Present? No **Liner Type** NO LINER **Closure Method** No Bags

Liner Punctured? Yes **Layers Of Confinement** 0 **Fill Factor** 60 % **Liner Lid Present** No

Liquids

Liquids Present? No **Comment**

Liquid Between Liner and Drum 0 pints **Other Liquids** 0 pints

Containerized Liquid pints **Total Liquid Amount** 0 pints

Internal Container with Liquid 0 pints

Internal Container with Liquid No

Prohibited Liquids Present No

Containerized Liquid

Contents

Sharp Objects? Yes **Are Sharp Objects Protected?** No

	Value	*Comment*
Prohibited Compressed Gas Present?	No	
Explosives Present?	No	
Pyrophorics Present?	No	
Mercury Present?	No	
PCBs Present?	No	
PCB Mass (lbs)	0	
Wet Cell Batteries Present?	No	
Corrosives,Ignitables or Reactives Present?	No	
Beryllium Contaminates Present?	No	
Hazardous-Only Waste Present?	No	
Is Waste Incompatible with backfill, packaging materials, or shipping container materials?	No	
Sealed Containers Over 4L?	No	

IDC Verification

Is IDC correct? Yes **Recommended IDC** -

IDC Change Reason

Visual Exam Comment Remaining waste by weight percent is Plastic (Waste Materials) consisting of Bubble suits, PPE, plastic bags, and plastic sheeting.

VE Boxline and Repackaging Report

Batch Id VEB13-00518 **Container Id** 10506805 **Analysis Id** 0000313213

Source Container

Is there a source container? Yes

Source Container ID	Location	IDC
10498834	destroyed @ 676- BXI/15	RF-760

IDC CODES

Current Container IDC Code: BN-508 **Recommended IDC Code:** -

Waste Material Items

Packaging Materials

Material Item	Quantity	Unit	Unit Wt	Item Wt(lbs)

Waste Items by Weight

Material Item	Quantity	Unit	Unit Wt	Item Wt(lbs)

Waste Items by Volume

Material Item	Quantity	Unit	Unit Wt	Item Wt(lbs)
Rubber	1.000	PINTS	1.554	1.550
Iron	1.000	PINTS	7.807	7.810

Waste Parameters

Waste Parameter	Remaining Weight %	Actual Weight Lbs
Iron-based Metals/Alloys	0.000	7.810
Aluminum-based Metals/Alloys	0.000	0.000
Other metals	0.000	0.000
Other Inorganic Materials	0.000	0.000
Cellulosics	0.000	0.000
Rubber	0.000	1.550
Plastic (Waste Materials)	100.000	48.430
Inorganic matrix	0.000	0.000
Organic matrix	0.000	0.000
Soils/gravel	0.000	0.000
Steel (packaging materials)	0.000	26.000
Plastic (packaging materials)	0.000	0.000
Cellulosics Packaging	0.000	0.000

Esignature History

Esig Approval Id	User Id	E-signature Date	Comment
2653853	RPURCELL	13-NOV-13 11:59:59	
2653854	TOZBURN	13-NOV-13 12:00:02	

-----End of VE Boxline Report-----

AMWTP
Advanced Mixed Waste Treatment Project

AMWTP

Checklist Report

Date: 26-Sep-2014

Time: 08:43

Batch Id VEB13-00518 **Open Date** 12-NOV-13 **Close Date** 13-NOV-13

Reviewer RONALD GRISE **Approval Level** Independent Technical Reviewer

Approval Date 13-NOV-13 **Review Iteration** 1

Question Text	Answer	Requirement	Comment
1. Is the QA documentation for the Batch Data Reports complete and includes data reports and QC results? o VE Batch Coversheet o Table of Contents (manual review only) o VE Analysis Reports o Analytical Balance Calibration Check Sheet (Form-1215), if applicable (manual review only) o ITR Checklist (Form-1415, manual review only) o Batch Data Report Supplemental Comment Form (Form-1491, manual review only) o Associated NCRs (referenced in WTS) o Audio/Video Recording References, if applicable	Yes		
2. Are there 20 containers or less in the batch?	Yes		
3. Was each VE Operator qualified at the time of the VE event?	Yes		
4. Was a VE data form completed for each container in the batch?	Yes		
Was the data generated in a technically correct manner using the correct revision of INST-OI-34, Non-facility Visual Examination or INST-FOI-17, Facility Visual Examination Operations, as applicable.	Yes		
6. Was the correct revision of the procedure documented on each analysis report?	Yes		
7. Was the E-signature History review performed?	Yes		
8. Was guidance from VEE documented, as applicable?	N/A		
9. Does every drum reported in the batch have a valid audio/video recording (as applicable)?	N/A		
10. Does the physical form match the waste stream description, waste matrix code and IDC?	Yes		
11. Did the VE event result in an IDC/Waste Matrix Code change? If so, was an NCR initiated?	No		
12. Were the waste material parameters documented correctly?	Yes		
13. Was the presence or absence of prohibited items properly identified? o If prohibited items were identified, were NCRs initiated?	Yes		
14. Has the description of rigid liners and layers of confinement been properly documented?	Yes		
15. Was the drum age criteria (DAC) entered correctly and completely? o Closure Method(s) o Liner Puncture Status o Layers of Confinement o Closure Date o Packaging Configuration o Type and number of filters, as applicable o Liner hole presence and diameter, as applicable	Yes		
16. Have filters been installed or removed from drum as recorded in WTS, as applicable?	N/A		
17. Hand calculations and unit conversions are correct? o Does the packaging weight plus the net weight equal the gross weight of the drum in the estimated waste material parameters, and for the unit conversions that are entered by volume or weight?	Yes		
18. Were all units and significant figures used correct for all reported volumes/weights?	Yes		

Batch Id VEB13-00518 **Open Date** 12-NOV-13 **Close Date** 13-NOV-13

Reviewer RONALD GRISE **Approval Level** Independent Technical Reviewer
Approval Date 13-NOV-13 **Review Iteration** 1

Question Text	Answer	Requirement	Comment
19. Has the data been reviewed for transcription errors as appropriate?	Yes		
20. Were the Visual Examination QAOs met? o Precision o Accuracy o Completeness o Comparability	Yes		
21. Is each data form signed by qualified VE Operators, as applicable per the appropriate procedure being used?	Yes		
22. Was the audio/video check satisfactory, as applicable?	N/A		
23. Was the scale or balance check weight event satisfactory, as applicable?	N/A		
24. Are the QC weight checks within the tolerance of the scale or balance, as applicable?	N/A		
25. Were any NCRs generated for drums containing prohibited items or any nonconforming conditions that failed to meet DQOs or QAOs? o Include the NCRs as appropriate, in the Batch Data Report.	No		
26. Were the rework requirements clearly identified in WTS or on the BDR?	N/A		

Batch Id VEB13-00518 **Open Date** 12-NOV-13 **Close Date** 13-NOV-13

Reviewer REED WALKER **Approval Level** SPM Data Validation

Approval Date 14-NOV-13 **Review Iteration** 1

Question Text	Answer	Requirement	Comment
(1) Has the batch received a Data Generation Level Independent Technical Review?	Yes	MP-TRUW-8.2, C3-10b(1)	
(2) Are the batch data review checklists complete?	Yes	MP-TRUW-8.2, C3-10b(1)	
(3) When identified, were PCBs, mercury, lead, or other hazardous contaminants consistent with the waste stream AK Summary Report(s) and/or AK documentation?	N/A	MP-TRUW-8.2, C4-3	None were identified.
(4) Are any ignitable, corrosive, or reactive wastes identified?	No	MP-TRUW-8.2, C4-3	
(5) Are the packaging configurations identified on the VE consistent with the waste stream AK Summary Report(s) and/or AK documentation?	Yes	MP-TRUW-8.2, C4-3	
(6) Do the drums in this batch contain typical waste items consistent with waste stream AK Summary Report(s) and/or AK documentation?	Yes	MP-TRUW-8.2, C4-3	
(7) Are the Waste Matrix Codes and physical form descriptions consistent with AK?	Yes	MP-TRUW-8.2, C4-3	
(8) Have all AK discrepancies been resolved and have all AK Resolution checklists been approved? Reference all waste stream AK documentation used in review of this data package.	N/A	MP-TRUW-8.2, C4-3	No discrepancies identified.
(9) Does the batch report identify the correct implementing procedure number and revision number used for this testing method?	Yes	MP-TRUW-8.2, C3-4 and Table C3-11	
(10) Have the Waste Matrix Code (WMC) and IDC for all drums in the batch remained the same as originally assigned by the historical designation? NOTE: If not, note the drum number in the comment field and notify the Acceptable Knowledge Expert (AKE) if an NCR does not exist for the WMC and IDC change.	Yes	MP-TRUW-8.2, C-3c and C1-4	
(11) Does the physical form of the waste match the WMC, waste stream description, and identify the absence of prohibited items?	Yes	MP-TRUW-8.2, C-3c and C1-4	
(12) If observable liquids exist in the drum, is an estimate of quantity given?	N/A	MP-TRUW-8.2, C-3c and C1-4	No liquids identified.
(13) Precision: Have all discrepancies been reconciled between the operator and the ITR with regard to identification of WMC, liquids in excess of TSDF-WAC limits, and compressed gases?	Yes	MP-TRUW-8.2 C3-4b	
(14) Accuracy: Have all operators passed a comprehensive examination and demonstrated satisfactory performance in the presence of the VE expert during initial and subsequent qualifications?	Yes	MP-TRUW-8.2 C3-4b	
(15) Completeness: Has a validated VE data form been obtained for 100% of the waste containers subject to VE?	Yes	MP-TRUW-8.2 C3-4b	
(16) Comparability: Has the comparability of VE data from different operators been enhanced by use of standardized VE procedures and operator qualifications?	Yes	MP-TRUW-8.2 C3-4b	
(17) Does the data for all containers within this batch meet the review, validation, and verification requirements? · Are proper units (e.g. Liters or pounds) and significant figure used? · Is the BDR complete (all pages identified in the BDR and numbered according)? - VE Batch Coversheet - Table of Contents (manual review only) - VE Analysis Reports - Analytical Balance Calibration Checklist (if applicable) - ITR Checklist (Form-1415)	Yes	MP-TRUW-8.2, C3-10b and Table C3-11	

Batch Id VEB13-00518 **Open Date** 12-NOV-13 **Close Date** 13-NOV-13

Reviewer REED WALKER **Approval Level** SPM Data Validation

Approval Date 14-NOV-13 **Review Iteration** 1

Question Text	Answer	Requirement	Comment
- Associated NCRs - Audio/Video Recordings (if applicable)			
(18) Do the drum reports contain the (a) Batch Data Report number and date, (b) waste container number (c)WMC, (d) implementing procedure and revision, (e) audio/video recording reference, (f) audio and video QC checks were performed and satisfactory, (g) verification that the physical form matches the waste stream description and WMC, (h) absence of prohibited items, (i) gross container weight, (j) waste material parameter weights, and (k) signature and date of examination (signatures of both operators when applicable)?	Yes	MP-TRUW-8.2, C1-4 and Table C3-11	
(19) Is the description of container contents detailed enough to provide verification of estimated weights for the waste matrix parameters identified?	Yes	MP-TRUW-8.2, C1-4 and Table C3-11	
(20) Is there a valid second weight check for every 10 items?	N/A	MP-TRUW-8.2, C1-4	Not required for this batch.
(21) Verification of two operator signatures when doing VE?	Yes	MP-TRUW-8.2, C-3d(1) and Table C3-11	
(22) Are there 20 or fewer containers in the batch?	Yes	MP-TRUW-8.2, C1-3 and C3-10	
(23) Review all NCRs (open and closed). Can the batch be approved?	Yes	MP-TRUW-8.2, C3-13	No NCRs.
(24) All data associated with this BDR is acceptable for signature release?	Yes	MP-TRUW-8.2, C3-10b and C3-10b(1)	

Batch Id VEB13-00518 **Open Date** 12-NOV-13 **Close Date** 13-NOV-13

Esignature History

Esig Approval ID	User ID	Esig Date	Approval Level	Comments
2654617	RWALKER	14-NOV-13	SPM	SPM validation complete. Promote batch.
2654211	RGRISE	13-NOV-13	ITR	Promote batch to SPM level.

AMWTP
Advanced Mixed Waste Treatment Project

AMWTP

Non-Conformance Report

Date: 26-Sep-2014

Time: 08:48

*****Batch NCR(s)*****

Batch Type	VEB	Batch ID	VEB13-00518		
Trackwise Number		**Status**	**Opened Date**	**Closed Date**	

*****Container NCR(s)*****

Container ID *or related Batch ID*	Trackwise Number	Status	Opened Date	Closed Date

*****End of Non-Conformance Report*****

AMWTP
Advanced Mixed Waste Treatment Project

AMWTP

Scale Check Event Report

Date: 26-Sep-2014

Time: 08:49

Batch Id	VEB13-00518	**Container Id**	10503295
Batch Id	VEB13-00518	**Container Id**	10506809
Batch Id	VEB13-00518	**Container Id**	10506805
Batch Id	VEB13-00518	**Container Id**	10503297
Batch Id	VEB13-00518	**Container Id**	10503293
Batch Id	VEB13-00518	**Container Id**	10503294
Batch Id	VEB13-00518	**Container Id**	10506817
Batch Id	VEB13-00518	**Container Id**	10506806
Batch Id	VEB13-00518	**Container Id**	10506813
Batch Id	VEB13-00518	**Container Id**	10503292
Batch Id	VEB13-00518	**Container Id**	10506814
Batch Id	VEB13-00518	**Container Id**	10506807
Batch Id	VEB13-00518	**Container Id**	10506812
Batch Id	VEB13-00518	**Container Id**	10503290
Batch Id	VEB13-00518	**Container Id**	10503298
Batch Id	VEB13-00518	**Container Id**	10506808
Batch Id	VEB13-00518	**Container Id**	10506804
Batch Id	VEB13-00518	**Container Id**	10503291
Batch Id	VEB13-00518	**Container Id**	10506815
Batch Id	VEB13-00518	**Container Id**	10506816

DIVIDER

PAGE

AMWTP
Advanced Mixed Waste Treatment Project

AMWTP

Batch Report Coversheet

Date: 02-Oct-2014

Time: 06:52

Batch Type Visual Exam Newly Generated Waste Closure
Batch Report No. VNC14-00022
Batch Id VNC14-00022
Open Date 09-JUN-14 16:30:12
Close Date 09-JUN-14 16:30:21
Batch Status AP
Test Facility Idaho AMWTP

Container Id	IDC	Analysis Id	Date Examined	QC Type	Analysis Status	Operator
10523495	BN-508	0000319560	09-JUN-14 16:30:12	Original	P	ROSS J GUNNING

INFORMATION ONLY

**********Batch Comments**********

Written By	Date	Comment
RGUNNING	09-JUN-14 16:30:22	Esigned.
MSORENSON	30-SEP-14 09:56:00	This VNC was validated electroically per MP-TRUW-8.8.
MSORENSON	30-SEP-14 09:56:00	NCR 88614 was initiated and SDCR 3130 implemented to update the data on VNP 10523505.
MSORENSON	30-SEP-14 10:10:36	Promote to SPM.
RWALKER	30-SEP-14 15:48:18	The ITR answered question #16 on the ITR checklist as N/A and it should be Yes. Also demoting checklist to ITR to populate the correct revision of the ITR checklist.
RWALKER	30-SEP-14 15:48:18	Demoted batch back to ITR level for rework.
MSORENSON	30-SEP-14 15:54:58	Updated ITR checklist question # 16 to Yes. Promote to SPM.
RWALKER	01-OCT-14 08:40:37	SPM validation complete. Promote batch.

**********Batch E-Signature History**********

Approval ID	User ID	Signature Date	Comment
2773600	RGUNNING	09-JUN-2014 16:30:22	
2849617	MSORENSON	30-SEP-2014 10:10:36	Promote to SPM.
2850388	RWALKER	30-SEP-2014 15:48:18	Demoted batch back to ITR level for rework.
2850394	MSORENSON	30-SEP-2014 15:54:58	Updated ITR checklist question # 16 to Yes. Promote to SPM.
2850863	RWALKER	01-OCT-2014 08:40:37	SPM validation complete. Promote batch.

***** End of Batch Report Coversheet Report *****

AMWTP
Advanced Mixed Waste Treatment Project

AMWTP

VE Newly Generated Waste Closure Report

Date: 02-Oct-2014
Time: 06:53

Batch Id VNC14-00022 **Container Id** 10523495 **Analysis Id** 0000319560

Analysis Status Pass **Testing Facility** Idaho AMWTP

SAA Location 633, SG **VE Date** 09-JUN-2014 16:30 **IDC** BN-508
Equipment Id FAC-VNC
Procedure Id INST-FOI-17 **Revision** 27 **VE Weight in Lbs.** 61.74 **Net Weight in Lbs.** 2.74
Container Type 425

Operator 1 ROSS J GUNNING **Operator 2** JARED LANDON

General

Rigid Liner Present? No **Liner Punctured?** Yes **Liner Type** NO LINER
Layers Of Confinement 2 **Fill Factor (In %)** 50 **Liner Lid Present** No

Liquids

Liquids Present? No **Comment**

Liquid Between Liner and Drum 0 pints
Containerized Liquid 0 pints
Internal Container with Liquid 0 pints
Other Liquids 0 pints
Total Liquid 0 pints

Internal Container with Liquid No

Prohibited Liquids Present No

Containerized Liquid No

Contents

Sharp Objects? No **Are Sharp Objects Protected?** Yes

	Value	Comment
Prohibited Compressed Gas Present?	No	
Mercury Present?	No	
Beryllium Contaminants Present?	No	
Explosives Present?	No	
PCBs Present?	No	
PCB Mass (lbs)	0	
Pyrophorics Present?	No	
Corrosives,Ignitables or Reactives Present?	No	
Wet Cell Batteries Present?	No	
Hazardous Only Waste Present?	No	
Is Waste Incompatible with backfill, packaging materials, or shipping container materials?	No	
Sealed Containers Over 4L?	No	

VE Newly Generated Waste Closure Report

Batch Id VNC14-00022 **Container Id** 10523495 **Analysis Id** 0000319560

Waste Summary

Package ID	Material Item	Qty	Unit	Unit Wt	Est. Item Wt Lbs
10523495	Container tare weight	1.00	Each	59.00	59.00
10523505		1.00	Each	2.74	2.74
	Estimated Total Weight--->				61.74

Waste Parameters

Waste Parameter	Weight Lbs
Iron-based Metals/Alloys	0.08
Other Inorganic Materials	0.00
Soils/gravel	0.00
Organic matrix	0.00
Plastic (packaging materials)	0.00
MLLW Waste	0.00
Plastic (Waste Materials)	0.74
Inorganic matrix	0.00
Other metals	0.00
Cellulosics	1.92
Rubber	0.00
Aluminum-based Metals/Alloys	0.00
Steel (packaging materials)	59.00
Cellulosics Packaging	0.00
Total Weight--->	61.74

IDC Verification

Is IDC correct? Yes **Recommended IDC**

IDC Change Reason

Closure Method Twisted and Taped **Waste Matrix Code** S5490

Closure Date 09-JUN-14 16:30:12

Pack. Material Tare Wt. lbs 59

Waste Material Items

Packaging Materials

Material Item	Quantity	Unit	Unit Wt	Item Wt(lbs)

Waste Items by Weight

Material Item	Quantity	Unit	Unit Wt	Item Wt(lbs)

Waste Items by Volume

Material Item	Quantity	Unit	Unit Wt	Item Wt(lbs)

Waste Parameters

Waste Parameter	Remaining Weight %	Actual Weight Lbs
Iron-based Metals/Alloys	0.000	0.000
Aluminum-based Metals/Alloys	0.000	0.000
Other metals	0.000	0.000
Other Inorganic Materials	0.000	0.000
Cellulosics	100.000	0.000
Rubber	0.000	0.000
Plastic (Waste Materials)	0.000	0.000
Inorganic matrix	0.000	0.000
Organic matrix	0.000	0.000
Soils/gravel	0.000	0.000
Steel (packaging materials)	0.000	59.000
Plastic (packaging materials)	0.000	0.000
Cellulosics Packaging	0.000	0.000
MLLW Waste	0.000	0.000
Total--->	100.00	59.00

Container Filters

WDS Filter Code	Event	Event Date	Entered By	Remove	Other Filter Model	Exclude

Batch Id VNC14-00022 **Container Id** 10523495 **Analysis Id** 0000319560

Visual Exam Comment Remaing waste by weight percent is cellulosics consisting of blotter paper. Waste is from a pre filter change out. RJG 06/09/14

NF19SD	OTHER	09-Jun-2014	RGUNNING	N

Filter Comment

E-Signature History

Esig Approval I	User	Esig Date	Comment
2773599	JLANDON	09-JUN-2014 16:30:15	
2773598	RGUNNING	09-JUN-2014 16:30:13	

------End of VE Newly Generated Waste Closure Report-----

AMWTP
Advanced Mixed Waste Treatment Project

AMWTP

VE Newly Generated Waste Package Report

Date: 02-Oct-2014

Time: 06:53

Batch Id VNC14-00022

Analysis ID 0000319554 **Package ID** 10523505 **SAA Container ID** 10523495

VE Date 09-JUN-2014 16:16 **Package Wt.** 2.74 Lbs **Waste Activity** Other (describe)

Operator 1 ROSS J GUNNING **Equipment Id** FAC-VNC **Procedure Id** INST-FOI-17

Operator 2 JARED LANDON **Revision** 27

General

Closure Method Twisted and Taped **IDC** BN-508 **IDC Desc** AMWTP Newly Generated Debris

Visual Exam Comment Remaing waste by weight percent is cellulosics consisting of blotter paper. Waste is from a pre filter change out. RJG 06/09/14

Liquids

Liquids Present? No **Comment**

Liquid Between Liner and Drum 0 pints **Other Liquids** 0 pints

Internal Container with Liquid 0 pints **Total Liquid** 0 pints

Containerized Liquid pints

Internal Container with Liquid No

Prohibited Liquids Present No

Containerized Liquid

Contents

Sharp Objects? No **Are Sharp Objects Protected?** Yes

	Value	*Comment*
Prohibited Compressed Gas Present?	No	
Mercury Present?	No	
Explosives Present?	No	
PCBs Present?	No	
PCB Mass (lbs)	0	
Pyrophorics Present?	No	
Corrosives,Ignitables or Reactives Present?	No	
Wet Cell Batteries Present?	No	
Beryllium Contaminants Present?	No	
Hazardous Only Waste Present?	No	
Is Waste Incompatible with backfill, packaging materials, or shipping container materials?	No	
Sealed Containers Over 4L?	No	

Source Container

Is there a Source Container? No

Source Container ID	Location	IDC

AMWTP

VE Newly Generated Waste Package Report

Date: 02-Oct-2014

Time: 06:53

Batch Id VNC14-00022

Analysis ID 0000319554 **Package ID** 10523505

Waste Material Items

Packaging Materials

Material Item	Quantity	Unit	Unit Wt	Item Wt(lbs)

Waste Items by Weight

Material Item	Quantity	Unit	Unit Wt	Item Wt(lbs)
Plastic bag for waste	2.000	EACH	0.250	0.500
Flanders Prefilter	1.000	EACH	1.580	1.580

Waste Items by Volume

Material Item	Quantity	Unit	Unit Wt	Item Wt(lbs)

Waste Parameters

Waste Parameter	Remaining Weight %	Actual Weight Lbs
Iron-based Metals/Alloys	0.000	0.079
Aluminum-based Metals/Alloys	0.000	0.000
Other metals	0.000	0.000
Other Inorganic Materials	0.000	0.000
Cellulosics	100.000	1.924
Rubber	0.000	0.000
Plastic (Waste Materials)	0.000	0.737
Inorganic matrix	0.000	0.000
Organic matrix	0.000	0.000
Soils/gravel	0.000	0.000
Steel (packaging materials)	0.000	0.000
Plastic (packaging materials)	0.000	0.000
Cellulosics Packaging	0.000	0.000
MLLW Waste	0.000	0.000
Total Weight --->		2.740

ESignature

Esig Id	User Id	Date	Comment
2773583	JLANDON	09-JUN-2014 16:16:40	
2773582	RGUNNING	09-JUN-2014 16:16:38	

------End of VE Newly Generated Waste Package Report-----

AMWTP
Advanced Mixed Waste Treatment Project

AMWTP

Checklist Report

Date: 02-Oct-2014

Time: 06:54

Batch Id VNC14-00022 **Open Date** 09-JUN-14 **Close Date** 09-JUN-14

Reviewer MARK SORENSON **Approval Level** Independent Technical Reviewer

Approval Date 30-SEP-14 **Review Iteration** 1

Question Text	Answer	Requirement	Comment
1. Is the QA documentation for the Batch Data Reports complete and includes data reports and QC results? o VE Batch Coversheet o Table of Contents (manual review only) o VE Analysis Reports o Analytical Balance Calibration Check Sheet (Form-1215), if applicable (manual review only) o ITR Checklist (Form-1415, manual review only) o Batch Data Report Supplemental Comment Form (Form-1491, manual review only) o Associated NCRs (referenced in WTS) o Audio/Video Recording References, if applicable	Yes		
2. Are there 20 containers or less in the batch?	Yes		
3. Was each VE Operator qualified at the time of the VE event?	Yes		
4. Was a VE data form completed for each container in the batch?	Yes		
Was the data generated in a technically correct manner using the correct revision of INST-OI-34, Non-facility Visual Examination or INST-FOI-17, Facility Visual Examination Operations, as applicable.	Yes		
6. Was the correct revision of the procedure documented on each analysis report?	Yes		
7. Was the E-signature History review performed?	Yes		
8. Was guidance from VEE documented, as applicable?	N/A		
9. Does every drum reported in the batch have a valid audio/video recording (as applicable)?	N/A		
10. Does the physical form match the waste stream description, waste matrix code and IDC?	Yes		
11. Did the VE event result in an IDC/Waste Matrix Code change? If so, was an NCR initiated?	No		
12. Were the waste material parameters documented correctly?	Yes		
13. Was the presence or absence of prohibited items properly identified? o If prohibited items were identified, were NCRs initiated?	Yes		
14. Has the description of rigid liners and layers of confinement been properly documented?	Yes		
15. Was the drum age criteria (DAC) entered correctly and completely? o Closure Method(s) o Liner Puncture Status o Layers of Confinement o Closure Date o Packaging Configuration o Type and number of filters, as applicable o Liner hole presence and diameter, as applicable	Yes		
16. Have filters been installed or removed from drum as recorded in WTS, as applicable?	N/A		
17. Hand calculations and unit conversions are correct? o Does the packaging weight plus the net weight equal the gross weight of the drum in the estimated waste material parameters, and for the unit conversions that are entered by volume or weight?	Yes		
18. Were all units and significant figures used correct for all reported volumes/weights?	Yes		

Batch Id VNC14-00022 **Open Date** 09-JUN-14 **Close Date** 09-JUN-14

Reviewer MARK SORENSON **Approval Level** Independent Technical Reviewer
Approval Date 30-SEP-14 **Review Iteration** 1

Question Text	Answer	Requirement	Comment
19. Has the data been reviewed for transcription errors as appropriate?	Yes		
20. Were the Visual Examination QAOs met? o Precision o Accuracy o Completeness o Comparability	Yes		
21. Is each data form signed by qualified VE Operators, as applicable per the appropriate procedure being used?	Yes		
22. Was the audio/video check satisfactory, as applicable?	N/A		
23. Was the scale or balance check weight event satisfactory, as applicable?	N/A		
24. Are the QC weight checks within the tolerance of the scale or balance, as applicable?	N/A		
25. Were any NCRs generated for drums containing prohibited items or any nonconforming conditions that failed to meet DQOs or QAOs? o Include the NCRs as appropriate, in the Batch Data Report.	No		
26. Were the rework requirements clearly identified in WTS or on the BDR?	N/A		No rework identified.

Batch Id VNC14-00022 **Open Date** 09-JUN-14 **Close Date** 09-JUN-14

Reviewer MARK SORENSON **Approval Level** Independent Technical Reviewer

Approval Date 30-SEP-14 **Review Iteration** 2

Question Text	Answer	Requirement	Comment
1. Is the QA documentation for the Batch Data Reports complete and includes data reports and QC results? o VE Batch Coversheet o Table of Contents (manual review only) o VE Analysis Reports o Analytical Balance Calibration Check Sheet (Form-1215), if applicable (manual review only) o ITR Checklist (Form-1415, manual review only) o Batch Data Report Supplemental Comment Form (Form-1491, manual review only) o Associated NCRs (referenced in WTS) o Audio/Video Recording References, if applicable	Yes		
2. Are there 20 containers or less in the batch?	Yes		
3. Was each VE Operator qualified at the time of the VE event?	Yes		
4. Was a VE data form completed for each container in the batch?	Yes		
Was the data generated in a technically correct manner using the correct revision of INST-OI-34, Non-facility Visual Examination or INST-FOI-17, Facility Visual Examination Operations, as applicable.	Yes		
6. Was the correct revision of the procedure documented on each analysis report?	Yes		
7. Was the E-signature History review performed?	Yes		
8. Was guidance from VEE documented, as applicable?	N/A		
9. Does every drum reported in the batch have a valid audio/video recording (as applicable)?	N/A		
10. Does the physical form match the waste stream description, waste matrix code and IDC?	Yes		
11. Did the VE event result in an IDC/Waste Matrix Code change? If so, was an NCR initiated?	No		
12. Were the waste material parameters documented correctly?	Yes		
13. Was the presence or absence of prohibited items properly identified? o If prohibited items were identified, were NCRs initiated?	Yes		
14. Has the description of rigid liners and layers of confinement been properly documented?	Yes		
15. Was the drum age criteria (DAC) entered correctly and completely? o Closure Method(s) o Liner Puncture Status o Layers of Confinement o Closure Date o Packaging Configuration o Type and number of filters, as applicable o Liner hole presence and diameter, as applicable	Yes		
16. Have filters been installed or removed from drum as recorded in WTS, as applicable?	Yes		
17. Hand calculations and unit conversions are correct? o Does the packaging weight plus the net weight equal the gross weight of the drum in the estimated waste material parameters, and for the unit conversions that are entered by volume or weight?	Yes		
18. Were all units and significant figures used correct for all reported volumes/weights?	Yes		

Batch Id VNC14-00022 **Open Date** 09-JUN-14 **Close Date** 09-JUN-14

Reviewer	MARK SORENSON	**Approval Level**	Independent Technical Reviewer
Approval Date	30-SEP-14	**Review Iteration**	2

Question Text	Answer	Requirement	Comment
19. Has the data been reviewed for transcription errors as appropriate?	Yes		
20. Were the Visual Examination QAOs met? o Precision o Accuracy o Completeness o Comparability	Yes		
21. Is each data form signed by qualified VE Operators, as applicable per the appropriate procedure being used?	Yes		
22. Was the audio/video check satisfactory, as applicable?	N/A		
23. Was the scale or balance check weight event satisfactory, as applicable?	N/A		
24. Are the QC weight checks within the tolerance of the scale or balance, as applicable?	N/A		
25. Were any NCRs generated for drums containing prohibited items or any nonconforming conditions that failed to meet DQOs or QAOs? o Include the NCRs as appropriate, in the Batch Data Report.	No		
26. Were the rework requirements clearly identified in WTS or on the BDR?	N/A		No rework identified.

Batch Id VNC14-00022 **Open Date** 09-JUN-14 **Close Date** 09-JUN-14

Reviewer REED WALKER **Approval Level** SPM Data Validation

Approval Date 30-SEP-14 **Review Iteration** 1

Question Text	Answer	Requirement	Comment
(1) Has the batch received a Data Generation Level Independent Technical Review?	Yes	MP-TRUW-8.2, C3-10b(1)	
(2) Are the batch data review checklists complete?	No	MP-TRUW-8.2, C3-10b(1)	See batch comments.
(3) When identified, were PCBs, mercury, lead, or other hazardous contaminants consistent with the waste stream AK Summary Report(s) and/or AK documentation?	N/A	MP-TRUW-8.2, C4-3	
(4) Are any ignitable, corrosive, or reactive wastes identified?	No	MP-TRUW-8.2, C4-3	
(5) Are the packaging configurations identified on the VE consistent with the waste stream AK Summary Report(s) and/or AK documentation?	Yes	MP-TRUW-8.2, C4-3	
(6) Do the drums in this batch contain typical waste items consistent with waste stream AK Summary Report(s) and/or AK documentation?	Yes	MP-TRUW-8.2, C4-3	
(7) Are the Waste Matrix Codes and physical form descriptions consistent with AK?	Yes	MP-TRUW-8.2, C4-3	
(8) Have all AK discrepancies been resolved and have all AK Resolution checklists been approved? Reference all waste stream AK documentation used in review of this data package.	N/A	MP-TRUW-8.2, C4-3	No discrepancies identified.
(9) Does the batch report identify the correct implementing procedure number and revision number used for this testing method?	Yes	MP-TRUW-8.2, C3-4 and Table C3-11	
(10) Have the Waste Matrix Code (WMC) and IDC for all drums in the batch remained the same as originally assigned by the historical designation? NOTE: If not, note the drum number in the comment field and notify the Acceptable Knowledge Expert (AKE) if an NCR does not exist for the WMC and IDC change.	Yes	MP-TRUW-8.2, C-3c and C1-4	
(11) Does the physical form of the waste match the WMC, waste stream description, and identify the absence of prohibited items?	Yes	MP-TRUW-8.2, C-3c and C1-4	
(12) If observable liquids exist in the drum, is an estimate of quantity given?	N/A	MP-TRUW-8.2, C-3c and C1-4	No liquids identified.
(13) Precision: Have all discrepancies been reconciled between the operator and the ITR with regard to identification of WMC, liquids in excess of TSDF-WAC limits, and compressed gases?	Yes	MP-TRUW-8.2 C3-4b	
(14) Accuracy: Have all operators passed a comprehensive examination and demonstrated satisfactory performance in the presence of the VE expert during initial and subsequent qualifications?	Yes	MP-TRUW-8.2 C3-4b	
(15) Completeness: Has a validated VE data form been obtained for 100% of the waste containers subject to VE?	Yes	MP-TRUW-8.2 C3-4b	
(16) Comparability: Has the comparability of VE data from different operators been enhanced by use of standardized VE procedures and operator qualifications?	Yes	MP-TRUW-8.2 C3-4b	
(17) Does the data for all containers within this batch meet the review, validation, and verification requirements? · Are proper units (e.g. Liters or pounds) and significant figure used? · Is the BDR complete (all pages identified in the BDR and numbered according)? - VE Batch Coversheet - Table of Contents (manual review only) - VE Analysis Reports - Analytical Balance Calibration Checklist (if applicable) - ITR Checklist (Form-1415) - Associated NCRs	Yes	MP-TRUW-8.2, C3-10b and Table C3-11	

Batch Id VNC14-00022 **Open Date** 09-JUN-14 **Close Date** 09-JUN-14

Reviewer REED WALKER **Approval Level** SPM Data Validation

Approval Date 30-SEP-14 **Review Iteration** 1

Question Text	Answer	Requirement	Comment
- Audio/Video Recordings (if applicable)			
(18) Do the drum reports contain the (a) Batch Data Report number and date, (b) waste container number (c)WMC, (d) implementing procedure and revision, (e) audio/video recording reference, (f) audio and video QC checks were performed and satisfactory, (g) verification that the physical form matches the waste stream description and WMC, (h) absence of prohibited items, (i) gross container weight, (j) waste material parameter weights, and (k) signature and date of examination (signatures of both operators when applicable)?	Yes	MP-TRUW-8.2, C1-4 and Table C3-11	
(19) Is the description of container contents detailed enough to provide verification of estimated weights for the waste matrix parameters identified?	Yes	MP-TRUW-8.2, C1-4 and Table C3-11	
(20) Is there a valid second weight check for every 10 items?	N/A	MP-TRUW-8.2, C1-4	Not required for this batch.
(21) Verification of two operator signatures when doing VE?	Yes	MP-TRUW-8.2, C-3d(1) and Table C3-11	
(22) Are there 20 or fewer containers in the batch?	Yes	MP-TRUW-8.2, C1-3 and C3-10	
(23) Review all NCRs (open and closed). Can the batch be approved?	Yes	MP-TRUW-8.2, C3-13	
(24) All data associated with this BDR is acceptable for signature release?	No	MP-TRUW-8.2, C3-10b and C3-10b(1)	See batch comments.

Batch Id VNC14-00022 **Open Date** 09-JUN-14 **Close Date** 09-JUN-14

Reviewer REED WALKER **Approval Level** SPM Data Validation

Approval Date 01-OCT-14 **Review Iteration** 2

Question Text	Answer	Requirement	Comment
(1) Has the batch received a Data Generation Level Independent Technical Review?	Yes	MP-TRUW-8.2, C3-10b(1)	
(2) Are the batch data review checklists complete?	Yes	MP-TRUW-8.2, C3-10b(1)	
(3) When identified, were PCBs, mercury, lead, or other hazardous contaminants consistent with the waste stream AK Summary Report(s) and/or AK documentation?	N/A	MP-TRUW-8.2, C4-3	None were identified.
(4) Are any ignitable, corrosive, or reactive wastes identified?	No	MP-TRUW-8.2, C4-3	
(5) Are the packaging configurations identified on the VE consistent with the waste stream AK Summary Report(s) and/or AK documentation?	Yes	MP-TRUW-8.2, C4-3	
(6) Do the drums in this batch contain typical waste items consistent with waste stream AK Summary Report(s) and/or AK documentation?	Yes	MP-TRUW-8.2, C4-3	
(7) Are the Waste Matrix Codes and physical form descriptions consistent with AK?	Yes	MP-TRUW-8.2, C4-3	
(8) Have all AK discrepancies been resolved and have all AK Resolution checklists been approved? Reference all waste stream AK documentation used in review of this data package.	N/A	MP-TRUW-8.2, C4-3	No discrepancies identified.
(9) Does the batch report identify the correct implementing procedure number and revision number used for this testing method?	Yes	MP-TRUW-8.2, C3-4 and Table C3-11	
(10) Have the Waste Matrix Code (WMC) and IDC for all drums in the batch remained the same as originally assigned by the historical designation? NOTE: If not, note the drum number in the comment field and notify the Acceptable Knowledge Expert (AKE) if an NCR does not exist for the WMC and IDC change.	Yes	MP-TRUW-8.2, C-3c and C1-4	
(11) Does the physical form of the waste match the WMC, waste stream description, and identify the absence of prohibited items?	Yes	MP-TRUW-8.2, C-3c and C1-4	
(12) If observable liquids exist in the drum, is an estimate of quantity given?	N/A	MP-TRUW-8.2, C-3c and C1-4	No liquids identified.
(13) Precision: Have all discrepancies been reconciled between the operator and the ITR with regard to identification of WMC, liquids in excess of TSDF-WAC limits, and compressed gases?	Yes	MP-TRUW-8.2 C3-4b	
(14) Accuracy: Have all operators passed a comprehensive examination and demonstrated satisfactory performance in the presence of the VE expert during initial and subsequent qualifications?	Yes	MP-TRUW-8.2 C3-4b	
(15) Completeness: Has a validated VE data form been obtained for 100% of the waste containers subject to VE?	Yes	MP-TRUW-8.2 C3-4b	
(16) Comparability: Has the comparability of VE data from different operators been enhanced by use of standardized VE procedures and operator qualifications?	Yes	MP-TRUW-8.2 C3-4b	
(17) Does the data for all containers within this batch meet the review, validation, and verification requirements? · Are proper units (e.g. Liters or pounds) and significant figure used? · Is the BDR complete (all pages identified in the BDR and numbered according)? - VE Batch Coversheet - Table of Contents (manual review only) - VE Analysis Reports - Analytical Balance Calibration Checklist (if applicable) - ITR Checklist (Form-1415)	Yes	MP-TRUW-8.2, C3-10b and Table C3-11	

Batch Id VNC14-00022 **Open Date** 09-JUN-14 **Close Date** 09-JUN-14

Reviewer REED WALKER **Approval Level** SPM Data Validation

Approval Date 01-OCT-14 **Review Iteration** 2

Question Text	Answer	Requirement	Comment
- Associated NCRs - Audio/Video Recordings (if applicable)			
(18) Do the drum reports contain the (a) Batch Data Report number and date, (b) waste container number (c)WMC, (d) implementing procedure and revision, (e) audio/video recording reference, (f) audio and video QC checks were performed and satisfactory, (g) verification that the physical form matches the waste stream description and WMC, (h) absence of prohibited items, (i) gross container weight, (j) waste material parameter weights, and (k) signature and date of examination (signatures of both operators when applicable)?	Yes	MP-TRUW-8.2, C1-4 and Table C3-11	
(19) Is the description of container contents detailed enough to provide verification of estimated weights for the waste matrix parameters identified?	Yes	MP-TRUW-8.2, C1-4 and Table C3-11	
(20) Is there a valid second weight check for every 10 items?	N/A	MP-TRUW-8.2, C1-4	Not required for this batch.
(21) Verification of two operator signatures when doing VE?	Yes	MP-TRUW-8.2, C-3d(1) and Table C3-11	
(22) Are there 20 or fewer containers in the batch?	Yes	MP-TRUW-8.2, C1-3 and C3-10	
(23) Review all NCRs (open and closed). Can the batch be approved?	Yes	MP-TRUW-8.2, C3-13	
(24) All data associated with this BDR is acceptable for signature release?	Yes	MP-TRUW-8.2, C3-10b and C3-10b(1)	

Batch Id VNC14-00022 **Open Date** 09-JUN-14 **Close Date** 09-JUN-14

Esignature History

Esig Approval ID	User ID	Esig Date	Approval Level	Comments
2850863	RWALKER	01-OCT-14	SPM	SPM validation complete. Promote batch.
2850394	MSORENSON	30-SEP-14	ITR	Updated ITR checklist question # 16 to Yes. Promote to SPM.
2850388	RWALKER	30-SEP-14	SPM	Demoted batch back to ITR level for rework.
2849617	MSORENSON	30-SEP-14	ITR	Promote to SPM.

AMWTP
Advanced Mixed Waste Treatment Project

AMWTP

Non-Conformance Report

Date: 02-Oct-2014

Time: 06:55

*****Batch NCR(s)*****

Batch Type	VNC	**Batch ID**	VNC14-00022		
Trackwise Number		**Status**		**Opened Date**	**Closed Date**

*****Container NCR(s)*****

Container ID *or related Batch ID*	**Trackwise Number**	**Status**	**Opened Date**	**Closed Date**
10523495	88614	CLOSED	16-SEP-14	01-OCT-14

*****End of Non-Conformance Report*****

DIVIDER

PAGE

AMWTP
Advanced Mixed Waste Treatment Project

AMWTP

Batch Report Coversheet

Date: 26-Sep-2014

Time: 09:46

Batch Type VE Boxline
Batch Report No. VEB14-00026
Batch Id VEB14-00026
Open Date 04-FEB-14 22:44:06
Close Date 05-FEB-14 03:23:10
Batch Status AP
Test Facility Idaho AMWTP
Equipment Id VE BiD RPCK VE Box Repackaging Into Drums

Container Id	IDC	Analysis Id	Date Examined	QC Type	Analysis Status	Operator
10510986	BN-508	0000314201	04-FEB-14 22:44:07	Original	P	SHANE HIGH
10511143	BN-508	0000314203	04-FEB-14 22:53:07	Original	P	SHANE HIGH
10511147	BN-508	0000314204	04-FEB-14 22:55:25	Original	P	NATHAN KEMPTON
10511146	BN-508	0000314210	05-FEB-14 00:00:42	Original	P	NATHAN KEMPTON
10511145	BN-508	0000314211	05-FEB-14 00:29:44	Original	P	NATHAN KEMPTON
10511144	BN-508	0000314214	05-FEB-14 00:46:18	Original	P	NATHAN KEMPTON
10511139	BN-508	0000314215	05-FEB-14 00:53:43	Original	P	NATHAN KEMPTON
10511142	BN-508	0000314216	05-FEB-14 01:03:00	Original	P	BRIAN HAWKE
10511132	BN-508	0000314217	05-FEB-14 01:12:20	Original	P	NATHAN KEMPTON
10511141	BN-508	0000314218	05-FEB-14 01:09:53	Original	P	BRIAN HAWKE
10511140	BN-508	0000314219	05-FEB-14 01:13:41	Original	P	BRIAN HAWKE
10511137	BN-508	0000314220	05-FEB-14 01:24:34	Original	P	BRIAN HAWKE
10511138	BN-508	0000314221	05-FEB-14 01:28:54	Original	P	NATHAN KEMPTON
10511136	BN-508	0000314223	05-FEB-14 01:36:52	Original	P	BRIAN HAWKE
10511417	BN-508	0000314225	05-FEB-14 02:27:41	Original	P	BRIAN HAWKE
10511135	BN-508	0000314228	05-FEB-14 02:34:41	Original	P	BRIAN HAWKE
10511416	BN-508	0000314229	05-FEB-14 02:53:13	Original	P	BRIAN HAWKE
10511133	BN-508	0000314230	05-FEB-14 03:08:28	Original	P	NATHAN KEMPTON
10511134	BN-508	0000314231	05-FEB-14 03:17:46	Original	P	NATHAN KEMPTON
10511393	BN-508	0000314232	05-FEB-14 03:22:10	Original	P	NATHAN KEMPTON

INFORMATION ONLY

AMWTP

Batch Report Coversheet

Date: 26-Sep-2014

Time: 09:46

**********Batch Comments**********

Written By	Date	Comment
RGRISE	06-FEB-14 06:50:26	Initial validation performed electronically per MP-TRUW-8.8
RGRISE	06-FEB-14 06:50:26	Promote batch to SPM level.
RWALKER	11-FEB-14 07:18:30	SPM validation complete. Promote batch.

**********Batch E-Signature History**********

Approval ID	User ID	Signature Date	Comment
2688813	RGRISE	06-FEB-2014 06:50:26	Promote batch to SPM level.
2692196	RWALKER	11-FEB-2014 07:18:30	SPM validation complete. Promote batch.

***** End of Batch Report Coversheet Report *****

AMWTP
Advanced Mixed Waste Treatment Project

AMWTP

VE Boxline and Repackaging Report

Date: 26-Sep-2014

Time: 09:47

Batch Id VEB14-00026 **Container Id** 10510986 **Analysis Id** 0000314201

VE Date 04-FEB-14 22:44:07 **Analysis Status** Pass

Gen-IDC Code BN-508 AMWTP Newly Generated Debris **VE Weight** 145.53 lbs.

Closure Date 04-FEB-14 22:44:07 **Procedure Id** INST-FOI-17 **Net Weight** 119.53 lbs.

Container Type 55 **Revision** 27

Operator 1 SHANE HIGH **Waste Matrix** S5490 **Summary Category Group** S5000

Operator 2 JUSTIN BURTON **Equipment ID** VE BiD RPCK

General

Rigid Liner Present? No **Liner Type** NO LINER **Closure Method** No Bags

Liner Punctured? Yes **Layers Of Confinement** 0 **Fill Factor** 75 % **Liner Lid Present** No

Liquids

Liquids Present? No **Comment**

Liquid Between Liner and Drum 0 pints **Other Liquids** 0 pints

Containerized Liquid pints **Total Liquid Amount** 0 pints

Internal Container with Liquid 0 pints

Internal Container with Liquid No

Prohibited Liquids Present No

Containerized Liquid

Contents

Sharp Objects? No **Are Sharp Objects Protected?** Yes

	Value	*Comment*
Prohibited Compressed Gas Present?	No	
Explosives Present?	No	
Pyrophorics Present?	No	
Mercury Present?	No	
PCBs Present?	No	
PCB Mass (lbs)	0	
Wet Cell Batteries Present?	No	
Corrosives,Ignitables or Reactives Present?	No	
Beryllium Contaminates Present?	No	
Hazardous-Only Waste Present?	No	
Is Waste Incompatible with backfill, packaging materials, or shipping container materials?	No	
Sealed Containers Over 4L?	No	

IDC Verification

Is IDC correct? Yes **Recommended IDC** -

IDC Change Reason

Visual Exam Comment Waste is Plastic consisting of airline hoses, bags, tape, and PPE.

Batch Id VEB14-00026 **Container Id** 10510986 **Analysis Id** 0000314201

Source Container

Is there a source container? Yes

Source Container ID	Location	IDC
10201459	destroyed @ 676- BXI/15	AE-100

IDC CODES

Current Container IDC Code: BN-508 **Recommended IDC Code:** -

Waste Material Items

Packaging Materials

Material Item	Quantity	Unit	Unit Wt	Item Wt(lbs)

Waste Items by Weight

Material Item	Quantity	Unit	Unit Wt	Item Wt(lbs)

Waste Items by Volume

Material Item	Quantity	Unit	Unit Wt	Item Wt(lbs)
Wood	0.500	PINTS	0.702	0.350

Waste Parameters

Waste Parameter	Remaining Weight %	Actual Weight Lbs
Iron-based Metals/Alloys	0.000	0.000
Aluminum-based Metals/Alloys	0.000	0.000
Other metals	0.000	0.000
Other Inorganic Materials	0.000	0.000
Cellulosics	0.000	0.350
Rubber	0.000	0.000
Plastic (Waste Materials)	100.000	119.180
Inorganic matrix	0.000	0.000
Organic matrix	0.000	0.000
Soils/gravel	0.000	0.000
Steel (packaging materials)	0.000	26.000
Plastic (packaging materials)	0.000	0.000
Cellulosics Packaging	0.000	0.000

Esignature History

Esig Approval Id	User Id	E-signature Date	Comment
2687489	SHIGH	04-FEB-14 22:44:07	
2687490	JBURTON	04-FEB-14 22:44:09	

AMWTP

VE Boxline and Repackaging Report

Date: 26-Sep-2014

Time: 09:47

Batch Id VEB14-00026 **Container Id** 10511143 **Analysis Id** 0000314203

VE Date 04-FEB-14 22:53:07 **Analysis Status** Pass

Gen-IDC Code BN-508 AMWTP Newly Generated Debris **VE Weight** 123.48 lbs.

Closure Date 04-FEB-14 22:53:07 **Procedure Id** INST-FOI-17 **Net Weight** 97.48 lbs.

Container Type 55 **Revision** 27

Operator 1 SHANE HIGH **Waste Matrix** S5490 **Summary Category Group** S5000

Operator 2 JUSTIN BURTON **Equipment ID** VE BiD RPCK

General

Rigid Liner Present? No **Liner Type** NO LINER **Closure Method** No Bags

Liner Punctured? Yes **Layers Of Confinement** 0 **Fill Factor** 78 % **Liner Lid Present** No

Liquids

Liquids Present? No **Comment**

Liquid Between Liner and Drum 0 pints **Other Liquids** 0 pints

Containerized Liquid pints **Total Liquid Amount** 0 pints

Internal Container with Liquid 0 pints

Internal Container with Liquid No

Prohibited Liquids Present No

Containerized Liquid

Contents

Sharp Objects? No **Are Sharp Objects Protected?** Yes

	Value	*Comment*
Prohibited Compressed Gas Present?	No	
Explosives Present?	No	
Pyrophorics Present?	No	
Mercury Present?	No	
PCBs Present?	No	
PCB Mass (lbs)	0	
Wet Cell Batteries Present?	No	
Corrosives,Ignitables or Reactives Present?	No	
Beryllium Contaminates Present?	No	
Hazardous-Only Waste Present?	No	
Is Waste Incompatible with backfill, packaging materials, or shipping container materials?	No	
Sealed Containers Over 4L?	No	

IDC Verification

Is IDC correct? Yes **Recommended IDC** -

IDC Change Reason

Visual Exam Comment Waste is Plastic consisting of airline hoses, bags, tape, and PPE.

Batch Id VEB14-00026 **Container Id** 10511143 **Analysis Id** 0000314203

Source Container

Is there a source container? Yes

Source Container ID	Location	IDC
10201459	destroyed @ 676- BXI/15	AE-100

IDC CODES

Current Container IDC Code: BN-508 **Recommended IDC Code:** -

Waste Material Items

Packaging Materials

Material Item	Quantity	Unit	Unit Wt	Item Wt(lbs)

Waste Items by Weight

Material Item	Quantity	Unit	Unit Wt	Item Wt(lbs)

Waste Items by Volume

Material Item	Quantity	Unit	Unit Wt	Item Wt(lbs)
Rubber	1.000	PINTS	1.554	1.550
Wood	2.000	PINTS	0.702	1.400

Waste Parameters

Waste Parameter	Remaining Weight %	Actual Weight Lbs
Iron-based Metals/Alloys	0.000	0.000
Aluminum-based Metals/Alloys	0.000	0.000
Other metals	0.000	0.000
Other Inorganic Materials	0.000	0.000
Cellulosics	0.000	1.400
Rubber	0.000	1.550
Plastic (Waste Materials)	100.000	94.530
Inorganic matrix	0.000	0.000
Organic matrix	0.000	0.000
Soils/gravel	0.000	0.000
Steel (packaging materials)	0.000	26.000
Plastic (packaging materials)	0.000	0.000
Cellulosics Packaging	0.000	0.000

Esignature History

Esig Approval Id	User Id	E-signature Date	Comment
2687492	SHIGH	04-FEB-14 22:53:07	
2687493	JBURTON	04-FEB-14 22:53:09	

Batch Id VEB14-00026 **Container Id** 10511147 **Analysis Id** 0000314204

VE Date 04-FEB-14 22:55:25 **Analysis Status** Pass

Gen-IDC Code BN-508 AMWTP Newly Generated Debris **VE Weight** 77.18 lbs.

Closure Date 04-FEB-14 22:55:25 **Procedure Id** INST-FOI-17 **Net Weight** 51.18 lbs.

Container Type 55 **Revision** 27

Operator 1 NATHAN KEMPTON **Waste Matrix** S5490 **Summary Category Group** S5000

Operator 2 AARON FENN **Equipment ID** VE BiD RPCK

General

Rigid Liner Present? No **Liner Type** NO LINER **Closure Method** No Bags

Liner Punctured? Yes **Layers Of Confinement** 0 **Fill Factor** 70 % **Liner Lid Present** No

Liquids

Liquids Present? No **Comment**

Liquid Between Liner and Drum 0 pints **Other Liquids** 0 pints

Containerized Liquid pints **Total Liquid Amount** 0 pints

Internal Container with Liquid 0 pints

Internal Container with Liquid No

Prohibited Liquids Present No

Containerized Liquid

Contents

Sharp Objects? No **Are Sharp Objects Protected?** Yes

	Value	*Comment*
Prohibited Compressed Gas Present?	No	
Explosives Present?	No	
Pyrophorics Present?	No	
Mercury Present?	No	
PCBs Present?	No	
PCB Mass (lbs)	0	
Wet Cell Batteries Present?	No	
Corrosives,Ignitables or Reactives Present?	No	
Beryllium Contaminates Present?	No	
Hazardous-Only Waste Present?	No	
Is Waste Incompatible with backfill, packaging materials, or shipping container materials?	No	
Sealed Containers Over 4L?	No	

IDC Verification

Is IDC correct? Yes **Recommended IDC** -

IDC Change Reason

Visual Exam Comment Remaining waste by wieght percent is Plastic consisting of bags, sheeting, PPE, and bubblesuits.

Batch Id VEB14-00026 **Container Id** 10511147 **Analysis Id** 0000314204

Source Container

Is there a source container? Yes

Source Container ID	Location	IDC
10130730	destroyed @ 676- BXI/9	AE-100

IDC CODES

Current Container IDC Code: BN-508 **Recommended IDC Code:** -

Waste Material Items

Packaging Materials

Material Item	Quantity	Unit	Unit Wt	Item Wt(lbs)

Waste Items by Weight

Material Item	Quantity	Unit	Unit Wt	Item Wt(lbs)

Waste Items by Volume

Material Item	Quantity	Unit	Unit Wt	Item Wt(lbs)
Rubber	3.000	PINTS	1.554	4.660

Waste Parameters

Waste Parameter	Remaining Weight %	Actual Weight Lbs
Iron-based Metals/Alloys	0.000	0.000
Aluminum-based Metals/Alloys	0.000	0.000
Other metals	0.000	0.000
Other Inorganic Materials	0.000	0.000
Cellulosics	0.000	0.000
Rubber	0.000	4.660
Plastic (Waste Materials)	100.000	46.515
Inorganic matrix	0.000	0.000
Organic matrix	0.000	0.000
Soils/gravel	0.000	0.000
Steel (packaging materials)	0.000	26.000
Plastic (packaging materials)	0.000	0.000
Cellulosics Packaging	0.000	0.000

Esignature History

Esig Approval Id	User Id	E-signature Date	Comment
2687494	NKEMPTON	04-FEB-14 22:55:25	
2687495	AFENN	04-FEB-14 22:55:27	

Batch Id VEB14-00026 **Container Id** 10511146 **Analysis Id** 0000314210

VE Date 05-FEB-14 00:00:42 **Analysis Status** Pass

Gen-IDC Code BN-508 AMWTP Newly Generated Debris **VE Weight** 59.54 **lbs.**

Closure Date 05-FEB-14 00:00:42 **Procedure Id** INST-FOI-17 **Net Weight** 33.54 **lbs.**

Container Type 55 **Revision** 27

Operator 1 NATHAN KEMPTON **Waste Matrix** S5490 **Summary Category Group** S5000

Operator 2 AARON FENN **Equipment ID** VE BiD RPCK

General

Rigid Liner Present? No **Liner Type** NO LINER **Closure Method** No Bags

Liner Punctured? Yes **Layers Of Confinement** 0 **Fill Factor** 65 % **Liner Lid Present** No

Liquids

Liquids Present? No **Comment**

Liquid Between Liner and Drum 0 pints **Other Liquids** 0 pints

Containerized Liquid pints **Total Liquid Amount** 0 pints

Internal Container with Liquid 0 pints

Internal Container with Liquid No

Prohibited Liquids Present No

Containerized Liquid

Contents

Sharp Objects? No **Are Sharp Objects Protected?** Yes

	Value	*Comment*
Prohibited Compressed Gas Present?	No	
Explosives Present?	No	
Pyrophorics Present?	No	
Mercury Present?	No	
PCBs Present?	No	
PCB Mass (lbs)	0	
Wet Cell Batteries Present?	No	
Corrosives,Ignitables or Reactives Present?	No	
Beryllium Contaminates Present?	No	
Hazardous-Only Waste Present?	No	
Is Waste Incompatible with backfill, packaging materials, or shipping container materials?	No	
Sealed Containers Over 4L?	No	

IDC Verification

Is IDC correct? Yes **Recommended IDC** -

IDC Change Reason

Visual Exam Comment Remaining waste by wieght percent is Plastic consisting of bags, sheeting, PPE, and bubblesuits.

Batch Id VEB14-00026 **Container Id** 10511146 **Analysis Id** 0000314210

Source Container

Is there a source container? Yes

Source Container ID	Location	IDC
10130730	destroyed @ 676- BXI/9	AE-100

IDC CODES

Current Container IDC Code: BN-508 **Recommended IDC Code:** -

Waste Material Items

Packaging Materials

Material Item	Quantity	Unit	Unit Wt	Item Wt(lbs)

Waste Items by Weight

Material Item	Quantity	Unit	Unit Wt	Item Wt(lbs)

Waste Items by Volume

Material Item	Quantity	Unit	Unit Wt	Item Wt(lbs)
Rubber	4.000	PINTS	1.554	6.220

Waste Parameters

Waste Parameter	Remaining Weight %	Actual Weight Lbs
Iron-based Metals/Alloys	0.000	0.000
Aluminum-based Metals/Alloys	0.000	0.000
Other metals	0.000	0.000
Other Inorganic Materials	0.000	0.000
Cellulosics	0.000	0.000
Rubber	0.000	6.220
Plastic (Waste Materials)	100.000	27.315
Inorganic matrix	0.000	0.000
Organic matrix	0.000	0.000
Soils/gravel	0.000	0.000
Steel (packaging materials)	0.000	26.000
Plastic (packaging materials)	0.000	0.000
Cellulosics Packaging	0.000	0.000

Esignature History

Esig Approval Id	User Id	E-signature Date	Comment
2687503	NKEMPTON	05-FEB-14 00:00:43	
2687504	AFENN	05-FEB-14 00:00:45	

Batch Id VEB14-00026 **Container Id** 10511145 **Analysis Id** 0000314211

VE Date 05-FEB-14 00:29:44 **Analysis Status** Pass

Gen-IDC Code BN-508 AMWTP Newly Generated Debris **VE Weight** 121.28 **lbs.**

Closure Date 05-FEB-14 00:29:44 **Procedure Id** INST-FOI-17 **Net Weight** 95.28 **lbs.**

Container Type 55 **Revision** 27

Operator 1 NATHAN KEMPTON **Waste Matrix** S5490 **Summary Category Group** S5000

Operator 2 AARON FENN **Equipment ID** VE BiD RPCK

General

Rigid Liner Present? No **Liner Type** NO LINER **Closure Method** No Bags

Liner Punctured? Yes **Layers Of Confinement** 0 **Fill Factor** 60 % **Liner Lid Present** No

Liquids

Liquids Present? No **Comment**

Liquid Between Liner and Drum 0 pints **Other Liquids** 0 pints

Containerized Liquid pints **Total Liquid Amount** 0 pints

Internal Container with Liquid 0 pints

Internal Container with Liquid No

Prohibited Liquids Present No

Containerized Liquid

Contents

Sharp Objects? No **Are Sharp Objects Protected?** Yes

	Value	*Comment*
Prohibited Compressed Gas Present?	No	
Explosives Present?	No	
Pyrophorics Present?	No	
Mercury Present?	No	
PCBs Present?	No	
PCB Mass (lbs)	0	
Wet Cell Batteries Present?	No	
Corrosives,Ignitables or Reactives Present?	No	
Beryllium Contaminates Present?	No	
Hazardous-Only Waste Present?	No	
Is Waste Incompatible with backfill, packaging materials, or shipping container materials?	No	
Sealed Containers Over 4L?	No	

IDC Verification

Is IDC correct? Yes **Recommended IDC** -

IDC Change Reason

Visual Exam Comment Remaining waste by wieght percent is Plastic consisting of bags, sheeting, PPE, and bubblesuits.

Batch Id VEB14-00026 **Container Id** 10511145 **Analysis Id** 0000314211

Source Container

Is there a source container? Yes

Source Container ID	Location	IDC
10130730	destroyed @ 676- BXI/9	AE-100

IDC CODES

Current Container IDC Code: BN-508 **Recommended IDC Code:** -

Waste Material Items

Packaging Materials

Material Item	Quantity	Unit	Unit Wt	Item Wt(lbs)

Waste Items by Weight

Material Item	Quantity	Unit	Unit Wt	Item Wt(lbs)

Waste Items by Volume

Material Item	Quantity	Unit	Unit Wt	Item Wt(lbs)
Wood	2.000	PINTS	0.702	1.400

Waste Parameters

Waste Parameter	Remaining Weight %	Actual Weight Lbs
Iron-based Metals/Alloys	0.000	0.000
Aluminum-based Metals/Alloys	0.000	0.000
Other metals	0.000	0.000
Other Inorganic Materials	0.000	0.000
Cellulosics	0.000	1.400
Rubber	0.000	0.000
Plastic (Waste Materials)	100.000	93.875
Inorganic matrix	0.000	0.000
Organic matrix	0.000	0.000
Soils/gravel	0.000	0.000
Steel (packaging materials)	0.000	26.000
Plastic (packaging materials)	0.000	0.000
Cellulosics Packaging	0.000	0.000

Esignature History

Esig Approval Id	User Id	E-signature Date	Comment
2687514	NKEMPTON	05-FEB-14 00:29:44	
2687515	AFENN	05-FEB-14 00:29:47	

Batch Id VEB14-00026 **Container Id** 10511144 **Analysis Id** 0000314214

VE Date 05-FEB-14 00:46:18 **Analysis Status** Pass

Gen-IDC Code BN-508 AMWTP Newly Generated Debris **VE Weight** 61.74 lbs.

Closure Date 05-FEB-14 00:46:18 **Procedure Id** INST-FOI-17 **Net Weight** 35.74 lbs.

Container Type 55 **Revision** 27

Operator 1 NATHAN KEMPTON **Waste Matrix** S5490 **Summary Category Group** S5000

Operator 2 AARON FENN **Equipment ID** VE BiD RPCK

General

Rigid Liner Present? No **Liner Type** NO LINER **Closure Method** No Bags

Liner Punctured? Yes **Layers Of Confinement** 0 **Fill Factor** 65 % **Liner Lid Present** No

Liquids

Liquids Present? No **Comment**

Liquid Between Liner and Drum 0 pints **Other Liquids** 0 pints

Containerized Liquid pints **Total Liquid Amount** 0 pints

Internal Container with Liquid 0 pints

Internal Container with Liquid No

Prohibited Liquids Present No

Containerized Liquid

Contents

Sharp Objects? No **Are Sharp Objects Protected?** Yes

	Value	*Comment*
Prohibited Compressed Gas Present?	No	
Explosives Present?	No	
Pyrophorics Present?	No	
Mercury Present?	No	
PCBs Present?	No	
PCB Mass (lbs)	0	
Wet Cell Batteries Present?	No	
Corrosives,Ignitables or Reactives Present?	No	
Beryllium Contaminates Present?	No	
Hazardous-Only Waste Present?	No	
Is Waste Incompatible with backfill, packaging materials, or shipping container materials?	No	
Sealed Containers Over 4L?	No	

IDC Verification

Is IDC correct? Yes **Recommended IDC** -

IDC Change Reason

Visual Exam Comment Remaining waste by wieght percent is Plastic consisting of bags, sheeting, PPE, and bubblesuits.

Batch Id VEB14-00026 **Container Id** 10511144 **Analysis Id** 0000314214

Source Container

Is there a source container? Yes

Source Container ID	Location	IDC
10130730	destroyed @ 676- BXI/9	AE-100

IDC CODES

Current Container IDC Code: BN-508 **Recommended IDC Code:** -

Waste Material Items

Packaging Materials

Material Item	Quantity	Unit	Unit Wt	Item Wt(lbs)

Waste Items by Weight

Material Item	Quantity	Unit	Unit Wt	Item Wt(lbs)

Waste Items by Volume

Material Item	Quantity	Unit	Unit Wt	Item Wt(lbs)
Rubber	2.000	PINTS	1.554	3.110

Waste Parameters

Waste Parameter	Remaining Weight %	Actual Weight Lbs
Iron-based Metals/Alloys	0.000	0.000
Aluminum-based Metals/Alloys	0.000	0.000
Other metals	0.000	0.000
Other Inorganic Materials	0.000	0.000
Cellulosics	0.000	0.000
Rubber	0.000	3.110
Plastic (Waste Materials)	100.000	32.630
Inorganic matrix	0.000	0.000
Organic matrix	0.000	0.000
Soils/gravel	0.000	0.000
Steel (packaging materials)	0.000	26.000
Plastic (packaging materials)	0.000	0.000
Cellulosics Packaging	0.000	0.000

Esignature History

Esig Approval Id	User Id	E-signature Date	Comment
2687521	NKEMPTON	05-FEB-14 00:46:19	
2687522	AFENN	05-FEB-14 00:46:21	

VE Boxline and Repackaging Report

Batch Id VEB14-00026 **Container Id** 10511139 **Analysis Id** 0000314215

VE Date 05-FEB-14 00:53:43 **Analysis Status** Pass

Gen-IDC Code BN-508 AMWTP Newly Generated Debris **VE Weight** 81.59 lbs.

Closure Date 05-FEB-14 00:53:43 **Procedure Id** INST-FOI-17 **Net Weight** 55.59 lbs.

Container Type 55 **Revision** 27

Operator 1 NATHAN KEMPTON **Waste Matrix** S5490 **Summary Category Group** S5000

Operator 2 AARON FENN **Equipment ID** VE BiD RPCK

General

Rigid Liner Present? No **Liner Type** NO LINER **Closure Method** No Bags

Liner Punctured? Yes **Layers Of Confinement** 0 **Fill Factor** 70 % **Liner Lid Present** No

Liquids

Liquids Present? No **Comment**

Liquid Between Liner and Drum 0 pints **Other Liquids** 0 pints

Containerized Liquid pints **Total Liquid Amount** 0 pints

Internal Container with Liquid 0 pints

Internal Container with Liquid No

Prohibited Liquids Present No

Containerized Liquid

Contents

Sharp Objects? No **Are Sharp Objects Protected?** Yes

	Value	*Comment*
Prohibited Compressed Gas Present?	No	
Explosives Present?	No	
Pyrophorics Present?	No	
Mercury Present?	No	
PCBs Present?	No	
PCB Mass (lbs)	0	
Wet Cell Batteries Present?	No	
Corrosives,Ignitables or Reactives Present?	No	
Beryllium Contaminates Present?	No	
Hazardous-Only Waste Present?	No	
Is Waste Incompatible with backfill, packaging materials, or shipping container materials?	No	
Sealed Containers Over 4L?	No	

IDC Verification

Is IDC correct? Yes **Recommended IDC** -

IDC Change Reason

Visual Exam Comment Remaining waste by wieght percent is Plastic consisting of bags, sheeting, PPE, and bubblesuits.

Batch Id VEB14-00026 **Container Id** 10511139 **Analysis Id** 0000314215

Source Container

Is there a source container? Yes

Source Container ID	Location	IDC
10130730	destroyed @ 676- BXI/9	AE-100

IDC CODES

Current Container IDC Code: BN-508 **Recommended IDC Code:** -

Waste Material Items

Packaging Materials

Material Item	Quantity	Unit	Unit Wt	Item Wt(lbs)

Waste Items by Weight

Material Item	Quantity	Unit	Unit Wt	Item Wt(lbs)

Waste Items by Volume

Material Item	Quantity	Unit	Unit Wt	Item Wt(lbs)
Rubber	3.000	PINTS	1.554	4.660
Wood	3.000	PINTS	0.702	2.110

Waste Parameters

Waste Parameter	Remaining Weight %	Actual Weight Lbs
Iron-based Metals/Alloys	0.000	0.000
Aluminum-based Metals/Alloys	0.000	0.000
Other metals	0.000	0.000
Other Inorganic Materials	0.000	0.000
Cellulosics	0.000	2.110
Rubber	0.000	4.660
Plastic (Waste Materials)	100.000	48.815
Inorganic matrix	0.000	0.000
Organic matrix	0.000	0.000
Soils/gravel	0.000	0.000
Steel (packaging materials)	0.000	26.000
Plastic (packaging materials)	0.000	0.000
Cellulosics Packaging	0.000	0.000

Esignature History

Esig Approval Id	User Id	E-signature Date	Comment
2687524	NKEMPTON	05-FEB-14 00:53:44	
2687525	AFENN	05-FEB-14 00:53:45	

Batch Id VEB14-00026 **Container Id** 10511142 **Analysis Id** 0000314216

VE Date 05-FEB-14 01:03:00 **Analysis Status** Pass

Gen-IDC Code BN-508 AMWTP Newly Generated Debris **VE Weight** 200.66 **lbs.**

Closure Date 05-FEB-14 01:03:00 **Procedure Id** INST-FOI-17 **Net Weight** 174.66 **lbs.**

Container Type 55 **Revision** 27

Operator 1 BRIAN HAWKE **Waste Matrix** S5490 **Summary Category Group** S5000

Operator 2 JUSTIN BURTON **Equipment ID** VE BiD RPCK

General

Rigid Liner Present? No **Liner Type** NO LINER **Closure Method** No Bags

Liner Punctured? Yes **Layers Of Confinement** 0 **Fill Factor** 70 % **Liner Lid Present** No

Liquids

Liquids Present? No **Comment**

Liquid Between Liner and Drum 0 pints **Other Liquids** 0 pints

Containerized Liquid pints **Total Liquid Amount** 0 pints

Internal Container with Liquid 0 pints

Internal Container with Liquid No

Prohibited Liquids Present No

Containerized Liquid

Contents

Sharp Objects? Yes **Are Sharp Objects Protected?** No

	Value	*Comment*
Prohibited Compressed Gas Present?	No	
Explosives Present?	No	
Pyrophorics Present?	No	
Mercury Present?	No	
PCBs Present?	No	
PCB Mass (lbs)	0	
Wet Cell Batteries Present?	No	
Corrosives,Ignitables or Reactives Present?	No	
Beryllium Contaminates Present?	No	
Hazardous-Only Waste Present?	No	
Is Waste Incompatible with backfill, packaging materials, or shipping container materials?	No	
Sealed Containers Over 4L?	No	

IDC Verification

Is IDC correct? Yes **Recommended IDC** -

IDC Change Reason

Visual Exam Comment The remaining waste by weight percent is iron based alloys consisting of scrap metal.

Batch Id VEB14-00026 **Container Id** 10511142 **Analysis Id** 0000314216

Source Container

Is there a source container? Yes

Source Container ID	Location	IDC
10201459	destroyed @ 676- BXI/15	AE-100

IDC CODES

Current Container IDC Code: BN-508 **Recommended IDC Code:** -

Waste Material Items

Packaging Materials

Material Item	Quantity	Unit	Unit Wt	Item Wt(lbs)

Waste Items by Weight

Material Item	Quantity	Unit	Unit Wt	Item Wt(lbs)

Waste Items by Volume

Material Item	Quantity	Unit	Unit Wt	Item Wt(lbs)
Wood	3.000	PINTS	0.702	2.110
Plastic	1.000	PINTS	0.937	0.940

Waste Parameters

Waste Parameter	Remaining Weight %	Actual Weight Lbs
Iron-based Metals/Alloys	100.000	171.605
Aluminum-based Metals/Alloys	0.000	0.000
Other metals	0.000	0.000
Other Inorganic Materials	0.000	0.000
Cellulosics	0.000	2.110
Rubber	0.000	0.000
Plastic (Waste Materials)	0.000	0.940
Inorganic matrix	0.000	0.000
Organic matrix	0.000	0.000
Soils/gravel	0.000	0.000
Steel (packaging materials)	0.000	26.000
Plastic (packaging materials)	0.000	0.000
Cellulosics Packaging	0.000	0.000

Esignature History

Esig Approval Id	User Id	E-signature Date	Comment
2687530	BHAWKE	05-FEB-14 01:03:00	
2687531	JBURTON	05-FEB-14 01:03:02	

Batch Id VEB14-00026 **Container Id** 10511132 **Analysis Id** 0000314217

VE Date 05-FEB-14 01:12:20 **Analysis Status** Pass

Gen-IDC Code BN-508 AMWTP Newly Generated Debris **VE Weight** 119.07 **lbs.**

Closure Date 05-FEB-14 01:12:20 **Procedure Id** INST-FOI-17 **Net Weight** 93.07 **lbs.**

Container Type 55 **Revision** 27

Operator 1 NATHAN KEMPTON **Waste Matrix** S5490 **Summary Category Group** S5000

Operator 2 AARON FENN **Equipment ID** VE BiD RPCK

General

Rigid Liner Present? No **Liner Type** NO LINER **Closure Method** No Bags

Liner Punctured? Yes **Layers Of Confinement** 0 **Fill Factor** 75 % **Liner Lid Present** No

Liquids

Liquids Present? No **Comment**

Liquid Between Liner and Drum 0 pints **Other Liquids** 0 pints

Containerized Liquid pints **Total Liquid Amount** 0 pints

Internal Container with Liquid 0 pints

Internal Container with Liquid No

Prohibited Liquids Present No

Containerized Liquid

Contents

Sharp Objects? No **Are Sharp Objects Protected?** Yes

	Value	*Comment*
Prohibited Compressed Gas Present?	No	
Explosives Present?	No	
Pyrophorics Present?	No	
Mercury Present?	No	
PCBs Present?	No	
PCB Mass (lbs)	0	
Wet Cell Batteries Present?	No	
Corrosives,Ignitables or Reactives Present?	No	
Beryllium Contaminates Present?	No	
Hazardous-Only Waste Present?	No	
Is Waste Incompatible with backfill, packaging materials, or shipping container materials?	No	
Sealed Containers Over 4L?	No	

IDC Verification

Is IDC correct? Yes **Recommended IDC** -

IDC Change Reason

Visual Exam Comment Remaining waste by wieght percent is Plastic consisting of bags, sheeting, PPE, and bubblesuits.

Batch Id VEB14-00026 **Container Id** 10511132 **Analysis Id** 0000314217

Source Container

Is there a source container? Yes

Source Container ID	Location	IDC
10130730	destroyed @ 676- BXI/9	AE-100

IDC CODES

Current Container IDC Code: BN-508 **Recommended IDC Code:** -

Waste Material Items

Packaging Materials

Material Item	Quantity	Unit	Unit Wt	Item Wt(lbs)

Waste Items by Weight

Material Item	Quantity	Unit	Unit Wt	Item Wt(lbs)

Waste Items by Volume

Material Item	Quantity	Unit	Unit Wt	Item Wt(lbs)
Wood	2.000	PINTS	0.702	1.400
Plastic	3.000	PINTS	0.937	2.810

Waste Parameters

Waste Parameter	Remaining Weight %	Actual Weight Lbs
Iron-based Metals/Alloys	0.000	0.000
Aluminum-based Metals/Alloys	0.000	0.000
Other metals	0.000	0.000
Other Inorganic Materials	0.000	0.000
Cellulosics	0.000	1.400
Rubber	0.000	0.000
Plastic (Waste Materials)	100.000	91.670
Inorganic matrix	0.000	0.000
Organic matrix	0.000	0.000
Soils/gravel	0.000	0.000
Steel (packaging materials)	0.000	26.000
Plastic (packaging materials)	0.000	0.000
Cellulosics Packaging	0.000	0.000

Esignature History

Esig Approval Id	User Id	E-signature Date	Comment
2687539	NKEMPTON	05-FEB-14 01:12:21	
2687540	AFENN	05-FEB-14 01:12:22	

VE Boxline and Repackaging Report

Batch Id VEB14-00026 **Container Id** 10511141 **Analysis Id** 0000314218

VE Date 05-FEB-14 01:09:53 **Analysis Status** Pass

Gen-IDC Code BN-508 AMWTP Newly Generated Debris **VE Weight** 116.87 lbs.

Closure Date 05-FEB-14 01:09:53 **Procedure Id** INST-FOI-17 **Net Weight** 90.87 lbs.

Container Type 55 **Revision** 27

Operator 1 BRIAN HAWKE **Waste Matrix** S5490 **Summary Category Group** S5000

Operator 2 JUSTIN BURTON **Equipment ID** VE BiD RPCK

General

Rigid Liner Present? No **Liner Type** NO LINER **Closure Method** No Bags

Liner Punctured? Yes **Layers Of Confinement** 0 **Fill Factor** 75 % **Liner Lid Present** No

Liquids

Liquids Present? No **Comment**

Liquid Between Liner and Drum 0 pints **Other Liquids** 0 pints

Containerized Liquid pints **Total Liquid Amount** 0 pints

Internal Container with Liquid 0 pints

Internal Container with Liquid No

Prohibited Liquids Present No

Containerized Liquid

Contents

Sharp Objects? Yes **Are Sharp Objects Protected?** No

	Value	*Comment*
Prohibited Compressed Gas Present?	No	
Explosives Present?	No	
Pyrophorics Present?	No	
Mercury Present?	No	
PCBs Present?	No	
PCB Mass (lbs)	0	
Wet Cell Batteries Present?	No	
Corrosives,Ignitables or Reactives Present?	No	
Beryllium Contaminates Present?	No	
Hazardous-Only Waste Present?	No	
Is Waste Incompatible with backfill, packaging materials, or shipping container materials?	No	
Sealed Containers Over 4L?	No	

IDC Verification

Is IDC correct? Yes **Recommended IDC** -

IDC Change Reason

Visual Exam Comment The remaining waste by weight percent is iron based alloys consisting of scrap metal.

Batch Id VEB14-00026 **Container Id** 10511141 **Analysis Id** 0000314218

Source Container

Is there a source container? Yes

Source Container ID	Location	IDC
10201459	destroyed @ 676- BXI/15	AE-100

IDC CODES

Current Container IDC Code: BN-508 **Recommended IDC Code:** -

Waste Material Items

Packaging Materials

Material Item	Quantity	Unit	Unit Wt	Item Wt(lbs)

Waste Items by Weight

Material Item	Quantity	Unit	Unit Wt	Item Wt(lbs)

Waste Items by Volume

Material Item	Quantity	Unit	Unit Wt	Item Wt(lbs)
Wood	5.000	PINTS	0.702	3.510
Plastic	2.000	PINTS	0.937	1.870

Waste Parameters

Waste Parameter	Remaining Weight %	Actual Weight Lbs
Iron-based Metals/Alloys	100.000	85.485
Aluminum-based Metals/Alloys	0.000	0.000
Other metals	0.000	0.000
Other Inorganic Materials	0.000	0.000
Cellulosics	0.000	3.510
Rubber	0.000	0.000
Plastic (Waste Materials)	0.000	1.870
Inorganic matrix	0.000	0.000
Organic matrix	0.000	0.000
Soils/gravel	0.000	0.000
Steel (packaging materials)	0.000	26.000
Plastic (packaging materials)	0.000	0.000
Cellulosics Packaging	0.000	0.000

Esignature History

Esig Approval Id	User Id	E-signature Date	Comment
2687537	BHAWKE	05-FEB-14 01:09:53	
2687538	JBURTON	05-FEB-14 01:09:55	

Batch Id VEB14-00026 **Container Id** 10511140 **Analysis Id** 0000314219

VE Date 05-FEB-14 01:13:41 **Analysis Status** Pass

Gen-IDC Code BN-508 AMWTP Newly Generated Debris **VE Weight** 149.94 lbs.

Closure Date 05-FEB-14 01:13:41 **Procedure Id** INST-FOI-17 **Net Weight** 123.94 lbs.

Container Type 55 **Revision** 27

Operator 1 BRIAN HAWKE **Waste Matrix** S5490 **Summary Category Group** S5000

Operator 2 JUSTIN BURTON **Equipment ID** VE BiD RPCK

---General---

Rigid Liner Present? No **Liner Type** NO LINER **Closure Method** No Bags

Liner Punctured? Yes **Layers Of Confinement** 0 **Fill Factor** 65 % **Liner Lid Present** No

---Liquids---

Liquids Present? No **Comment**

Liquid Between Liner and Drum 0 pints **Other Liquids** 0 pints

Containerized Liquid pints **Total Liquid Amount** 0 pints

Internal Container with Liquid 0 pints

Internal Container with Liquid No

Prohibited Liquids Present No

Containerized Liquid

---Contents---

Sharp Objects? Yes **Are Sharp Objects Protected?** No

	Value	*Comment*
Prohibited Compressed Gas Present?	No	
Explosives Present?	No	
Pyrophorics Present?	No	
Mercury Present?	No	
PCBs Present?	No	
PCB Mass (lbs)	0	
Wet Cell Batteries Present?	No	
Corrosives,Ignitables or Reactives Present?	No	
Beryllium Contaminates Present?	No	
Hazardous-Only Waste Present?	No	
Is Waste Incompatible with backfill, packaging materials, or shipping container materials?	No	
Sealed Containers Over 4L?	No	

---IDC Verification---

Is IDC correct? Yes **Recommended IDC** -

IDC Change Reason

Visual Exam Comment The remaining waste by weight percent is iron based alloys consisting of scrap metal.

Batch Id VEB14-00026 **Container Id** 10511140 **Analysis Id** 0000314219

Source Container

Is there a source container? Yes

Source Container ID	Location	IDC
10201459	destroyed @ 676- BXI/15	AE-100

IDC CODES

Current Container IDC Code: BN-508 **Recommended IDC Code:** -

Waste Material Items

Packaging Materials

Material Item	Quantity	Unit	Unit Wt	Item Wt(lbs)

Waste Items by Weight

Material Item	Quantity	Unit	Unit Wt	Item Wt(lbs)

Waste Items by Volume

Material Item	Quantity	Unit	Unit Wt	Item Wt(lbs)
Wood	1.000	PINTS	0.702	0.700

Waste Parameters

Waste Parameter	Remaining Weight %	Actual Weight Lbs
Iron-based Metals/Alloys	100.000	123.240
Aluminum-based Metals/Alloys	0.000	0.000
Other metals	0.000	0.000
Other Inorganic Materials	0.000	0.000
Cellulosics	0.000	0.700
Rubber	0.000	0.000
Plastic (Waste Materials)	0.000	0.000
Inorganic matrix	0.000	0.000
Organic matrix	0.000	0.000
Soils/gravel	0.000	0.000
Steel (packaging materials)	0.000	26.000
Plastic (packaging materials)	0.000	0.000
Cellulosics Packaging	0.000	0.000

Esignature History

Esig Approval Id	User Id	E-signature Date	Comment
2687541	BHAWKE	05-FEB-14 01:13:41	
2687542	JBURTON	05-FEB-14 01:13:42	

Batch Id VEB14-00026 **Container Id** 10511137 **Analysis Id** 0000314220

VE Date 05-FEB-14 01:24:34 **Analysis Status** Pass

Gen-IDC Code BN-508 AMWTP Newly Generated Debris **VE Weight** 77.18 lbs.

Closure Date 05-FEB-14 01:24:34 **Procedure Id** INST-FOI-17 **Net Weight** 51.18 lbs.

Container Type 55 **Revision** 27

Operator 1 BRIAN HAWKE **Waste Matrix** S5490 **Summary Category Group** S5000

Operator 2 JUSTIN BURTON **Equipment ID** VE BiD RPCK

General

Rigid Liner Present? No **Liner Type** NO LINER **Closure Method** No Bags

Liner Punctured? Yes **Layers Of Confinement** 0 **Fill Factor** 75 % **Liner Lid Present** No

Liquids

Liquids Present? No **Comment**

Liquid Between Liner and Drum 0 pints **Other Liquids** 0 pints

Containerized Liquid pints **Total Liquid Amount** 0 pints

Internal Container with Liquid 0 pints

Internal Container with Liquid No

Prohibited Liquids Present No

Containerized Liquid

Contents

Sharp Objects? Yes **Are Sharp Objects Protected?** No

	Value	*Comment*
Prohibited Compressed Gas Present?	No	
Explosives Present?	No	
Pyrophorics Present?	No	
Mercury Present?	No	
PCBs Present?	No	
PCB Mass (lbs)	0	
Wet Cell Batteries Present?	No	
Corrosives,Ignitables or Reactives Present?	No	
Beryllium Contaminates Present?	No	
Hazardous-Only Waste Present?	No	
Is Waste Incompatible with backfill, packaging materials, or shipping container materials?	No	
Sealed Containers Over 4L?	No	

IDC Verification

Is IDC correct? Yes **Recommended IDC** -

IDC Change Reason

Visual Exam Comment The remaining waste by weight percent is cellulosics consisting of wood and paper.

Batch Id VEB14-00026 **Container Id** 10511137 **Analysis Id** 0000314220

Source Container

Is there a source container? Yes

Source Container ID	Location	IDC
10201459	destroyed @ 676- BXI/15	AE-100

IDC CODES

Current Container IDC Code: BN-508 **Recommended IDC Code:** -

Waste Material Items

Packaging Materials

Material Item	Quantity	Unit	Unit Wt	Item Wt(lbs)

Waste Items by Weight

Material Item	Quantity	Unit	Unit Wt	Item Wt(lbs)

Waste Items by Volume

Material Item	Quantity	Unit	Unit Wt	Item Wt(lbs)
Iron	1.000	PINTS	7.807	7.810
Plastic	2.000	PINTS	0.937	1.870

Waste Parameters

Waste Parameter	Remaining Weight %	Actual Weight Lbs
Iron-based Metals/Alloys	0.000	7.810
Aluminum-based Metals/Alloys	0.000	0.000
Other metals	0.000	0.000
Other Inorganic Materials	0.000	0.000
Cellulosics	100.000	41.495
Rubber	0.000	0.000
Plastic (Waste Materials)	0.000	1.870
Inorganic matrix	0.000	0.000
Organic matrix	0.000	0.000
Soils/gravel	0.000	0.000
Steel (packaging materials)	0.000	26.000
Plastic (packaging materials)	0.000	0.000
Cellulosics Packaging	0.000	0.000

Esignature History

Esig Approval Id	User Id	E-signature Date	Comment
2687544	BHAWKE	05-FEB-14 01:24:34	
2687545	JBURTON	05-FEB-14 01:24:34	

VE Boxline and Repackaging Report

Batch Id VEB14-00026 **Container Id** 10511138 **Analysis Id** 0000314221

VE Date 05-FEB-14 01:28:54 **Analysis Status** Pass

Gen-IDC Code BN-508 AMWTP Newly Generated Debris **VE Weight** 70.56 lbs.

Closure Date 05-FEB-14 01:28:54 **Procedure Id** INST-FOI-17 **Net Weight** 44.56 lbs.

Container Type 55 **Revision** 27

Operator 1 NATHAN KEMPTON **Waste Matrix** S5490 **Summary Category Group** S5000

Operator 2 AARON FENN **Equipment ID** VE BiD RPCK

General

Rigid Liner Present? No **Liner Type** NO LINER **Closure Method** No Bags

Liner Punctured? Yes **Layers Of Confinement** 0 **Fill Factor** 65 % **Liner Lid Present** No

Liquids

Liquids Present? No **Comment**

Liquid Between Liner and Drum 0 pints **Other Liquids** 0 pints

Containerized Liquid pints **Total Liquid Amount** 0 pints

Internal Container with Liquid 0 pints

Internal Container with Liquid No

Prohibited Liquids Present No

Containerized Liquid

Contents

Sharp Objects? No **Are Sharp Objects Protected?** Yes

	Value	*Comment*
Prohibited Compressed Gas Present?	No	
Explosives Present?	No	
Pyrophorics Present?	No	
Mercury Present?	No	
PCBs Present?	No	
PCB Mass (lbs)	0	
Wet Cell Batteries Present?	No	
Corrosives,Ignitables or Reactives Present?	No	
Beryllium Contaminates Present?	No	
Hazardous-Only Waste Present?	No	
Is Waste Incompatible with backfill, packaging materials, or shipping container materials?	No	
Sealed Containers Over 4L?	No	

IDC Verification

Is IDC correct? Yes **Recommended IDC** -

IDC Change Reason

Visual Exam Comment Remaining waste by wieght percent is Plastic consisting of bags, sheeting, PPE, and bubblesuits.

VE Boxline and Repackaging Report

Batch Id VEB14-00026 **Container Id** 10511138 **Analysis Id** 0000314221

Source Container

Is there a source container? Yes

Source Container ID	Location	IDC
10130730	destroyed @ 676- BXI/9	AE-100

IDC CODES

Current Container IDC Code: BN-508 **Recommended IDC Code:** -

Waste Material Items

Packaging Materials

Material Item	Quantity	Unit	Unit Wt	Item Wt(lbs)

Waste Items by Weight

Material Item	Quantity	Unit	Unit Wt	Item Wt(lbs)

Waste Items by Volume

Material Item	Quantity	Unit	Unit Wt	Item Wt(lbs)
Rubber	3.000	PINTS	1.554	4.660
Wood	3.000	PINTS	0.702	2.110

Waste Parameters

Waste Parameter	Remaining Weight %	Actual Weight Lbs
Iron-based Metals/Alloys	0.000	0.000
Aluminum-based Metals/Alloys	0.000	0.000
Other metals	0.000	0.000
Other Inorganic Materials	0.000	0.000
Cellulosics	0.000	2.110
Rubber	0.000	4.660
Plastic (Waste Materials)	100.000	37.790
Inorganic matrix	0.000	0.000
Organic matrix	0.000	0.000
Soils/gravel	0.000	0.000
Steel (packaging materials)	0.000	26.000
Plastic (packaging materials)	0.000	0.000
Cellulosics Packaging	0.000	0.000

Esignature History

Esig Approval Id	User Id	E-signature Date	Comment
2687546	NKEMPTON	05-FEB-14 01:28:54	
2687547	AFENN	05-FEB-14 01:28:56	

Batch Id VEB14-00026 **Container Id** 10511136 **Analysis Id** 0000314223

VE Date 05-FEB-14 01:36:52 **Analysis Status** Pass

Gen-IDC Code BN-508 AMWTP Newly Generated Debris **VE Weight** 110.25 lbs.

Closure Date 05-FEB-14 01:36:52 **Procedure Id** INST-FOI-17 **Net Weight** 84.25 lbs.

Container Type 55 **Revision** 27

Operator 1 BRIAN HAWKE **Waste Matrix** S5490 **Summary Category Group** S5000

Operator 2 JUSTIN BURTON **Equipment ID** VE BiD RPCK

General

Rigid Liner Present? No **Liner Type** NO LINER **Closure Method** No Bags

Liner Punctured? Yes **Layers Of Confinement** 0 **Fill Factor** 80 % **Liner Lid Present** No

Liquids

Liquids Present? No **Comment**

Liquid Between Liner and Drum 0 pints **Other Liquids** 0 pints

Containerized Liquid pints **Total Liquid Amount** 0 pints

Internal Container with Liquid 0 pints

Internal Container with Liquid No

Prohibited Liquids Present No

Containerized Liquid

Contents

Sharp Objects? No **Are Sharp Objects Protected?** Yes

	Value	*Comment*
Prohibited Compressed Gas Present?	No	
Explosives Present?	No	
Pyrophorics Present?	No	
Mercury Present?	No	
PCBs Present?	No	
PCB Mass (lbs)	0	
Wet Cell Batteries Present?	No	
Corrosives,Ignitables or Reactives Present?	No	
Beryllium Contaminates Present?	No	
Hazardous-Only Waste Present?	No	
Is Waste Incompatible with backfill, packaging materials, or shipping container materials?	No	
Sealed Containers Over 4L?	No	

IDC Verification

Is IDC correct? Yes **Recommended IDC** -

IDC Change Reason

Visual Exam Comment The remaining waste by weight percent is cellulosics consisting of wood.

Batch Id VEB14-00026 **Container Id** 10511136 **Analysis Id** 0000314223

Source Container

Is there a source container? Yes

Source Container ID	Location	IDC
10201459	destroyed @ 676- BXI/15	AE-100

IDC CODES

Current Container IDC Code: BN-508 **Recommended IDC Code:** -

Waste Material Items

Packaging Materials

Material Item	Quantity	Unit	Unit Wt	Item Wt(lbs)

Waste Items by Weight

Material Item	Quantity	Unit	Unit Wt	Item Wt(lbs)

Waste Items by Volume

Material Item	Quantity	Unit	Unit Wt	Item Wt(lbs)
Plastic	1.000	PINTS	0.937	0.940

Waste Parameters

Waste Parameter	Remaining Weight %	Actual Weight Lbs
Iron-based Metals/Alloys	0.000	0.000
Aluminum-based Metals/Alloys	0.000	0.000
Other metals	0.000	0.000
Other Inorganic Materials	0.000	0.000
Cellulosics	100.000	83.310
Rubber	0.000	0.000
Plastic (Waste Materials)	0.000	0.940
Inorganic matrix	0.000	0.000
Organic matrix	0.000	0.000
Soils/gravel	0.000	0.000
Steel (packaging materials)	0.000	26.000
Plastic (packaging materials)	0.000	0.000
Cellulosics Packaging	0.000	0.000

Esignature History

Esig Approval Id	User Id	E-signature Date	Comment
2687555	BHAWKE	05-FEB-14 01:36:53	
2687556	JBURTON	05-FEB-14 01:36:54	

Batch Id VEB14-00026 **Container Id** 10511417 **Analysis Id** 0000314225

VE Date 05-FEB-14 02:27:41 **Analysis Status** Pass

Gen-IDC Code BN-508 AMWTP Newly Generated Debris **VE Weight** 436.59 lbs.

Closure Date 05-FEB-14 02:27:41 **Procedure Id** INST-FOI-17 **Net Weight** 410.59 lbs.

Container Type 55 **Revision** 27

Operator 1 BRIAN HAWKE **Waste Matrix** S5490 **Summary Category Group** S5000

Operator 2 JUSTIN BURTON **Equipment ID** VE BiD RPCK

General

Rigid Liner Present? No **Liner Type** NO LINER **Closure Method** No Bags

Liner Punctured? Yes **Layers Of Confinement** 0 **Fill Factor** 75 % **Liner Lid Present** No

Liquids

Liquids Present? No **Comment**

Liquid Between Liner and Drum 0 pints **Other Liquids** 0 pints

Containerized Liquid pints **Total Liquid Amount** 0 pints

Internal Container with Liquid 0 pints

Internal Container with Liquid No

Prohibited Liquids Present No

Containerized Liquid

Contents

Sharp Objects? Yes **Are Sharp Objects Protected?** No

	Value	*Comment*
Prohibited Compressed Gas Present?	No	
Explosives Present?	No	
Pyrophorics Present?	No	
Mercury Present?	No	
PCBs Present?	No	
PCB Mass (lbs)	0	
Wet Cell Batteries Present?	No	
Corrosives,Ignitables or Reactives Present?	No	
Beryllium Contaminates Present?	No	
Hazardous-Only Waste Present?	No	
Is Waste Incompatible with backfill, packaging materials, or shipping container materials?	No	
Sealed Containers Over 4L?	No	

IDC Verification

Is IDC correct? Yes **Recommended IDC** -

IDC Change Reason

Visual Exam Comment The remaining waste by weight percent is iron based alloys consisting of scrap metal.

Batch Id VEB14-00026 **Container Id** 10511417 **Analysis Id** 0000314225

Source Container

Is there a source container? Yes

Source Container ID	Location	IDC
10201459	destroyed @ 676- BXI/15	AE-100

IDC CODES

Current Container IDC Code: BN-508 **Recommended IDC Code:** -

Waste Material Items

Packaging Materials

Material Item	Quantity	Unit	Unit Wt	Item Wt(lbs)

Waste Items by Weight

Material Item	Quantity	Unit	Unit Wt	Item Wt(lbs)

Waste Items by Volume

Material Item	Quantity	Unit	Unit Wt	Item Wt(lbs)
Wood	6.000	PINTS	0.702	4.210
Plastic	1.000	PINTS	0.937	0.940

Waste Parameters

Waste Parameter	Remaining Weight %	Actual Weight Lbs
Iron-based Metals/Alloys	100.000	405.440
Aluminum-based Metals/Alloys	0.000	0.000
Other metals	0.000	0.000
Other Inorganic Materials	0.000	0.000
Cellulosics	0.000	4.210
Rubber	0.000	0.000
Plastic (Waste Materials)	0.000	0.940
Inorganic matrix	0.000	0.000
Organic matrix	0.000	0.000
Soils/gravel	0.000	0.000
Steel (packaging materials)	0.000	26.000
Plastic (packaging materials)	0.000	0.000
Cellulosics Packaging	0.000	0.000

Esignature History

Esig Approval Id	User Id	E-signature Date	Comment
2687567	BHAWKE	05-FEB-14 02:27:42	
2687568	JBURTON	05-FEB-14 02:27:44	

Batch Id VEB14-00026 **Container Id** 10511135 **Analysis Id** 0000314228

VE Date 05-FEB-14 02:34:41 **Analysis Status** Pass

Gen-IDC Code BN-508 AMWTP Newly Generated Debris **VE Weight** 105.84 lbs.

Closure Date 05-FEB-14 02:34:41 **Procedure Id** INST-FOI-17 **Net Weight** 79.84 lbs.

Container Type 55 **Revision** 27

Operator 1 BRIAN HAWKE **Waste Matrix** S5490 **Summary Category Group** S5000

Operator 2 JUSTIN BURTON **Equipment ID** VE BiD RPCK

General

Rigid Liner Present? No **Liner Type** NO LINER **Closure Method** No Bags

Liner Punctured? Yes **Layers Of Confinement** 0 **Fill Factor** 75 % **Liner Lid Present** No

Liquids

Liquids Present? No **Comment**

Liquid Between Liner and Drum 0 pints **Other Liquids** 0 pints

Containerized Liquid pints **Total Liquid Amount** 0 pints

Internal Container with Liquid 0 pints

Internal Container with Liquid No

Prohibited Liquids Present No

Containerized Liquid

Contents

Sharp Objects? Yes **Are Sharp Objects Protected?** No

	Value	*Comment*
Prohibited Compressed Gas Present?	No	
Explosives Present?	No	
Pyrophorics Present?	No	
Mercury Present?	No	
PCBs Present?	No	
PCB Mass (lbs)	0	
Wet Cell Batteries Present?	No	
Corrosives,Ignitables or Reactives Present?	No	
Beryllium Contaminates Present?	No	
Hazardous-Only Waste Present?	No	
Is Waste Incompatible with backfill, packaging materials, or shipping container materials?	No	
Sealed Containers Over 4L?	No	

IDC Verification

Is IDC correct? Yes **Recommended IDC** -

IDC Change Reason

Visual Exam Comment The remaining waste by weight percent is cellulosics consisting of wood.

VE Boxline and Repackaging Report

Batch Id VEB14-00026 **Container Id** 10511135 **Analysis Id** 0000314228

Source Container

Is there a source container? Yes

Source Container ID	Location	IDC
10201459	destroyed @ 676- BXI/15	AE-100

IDC CODES

Current Container IDC Code: BN-508 **Recommended IDC Code:** -

Waste Material Items

Packaging Materials

Material Item	Quantity	Unit	Unit Wt	Item Wt(lbs)

Waste Items by Weight

Material Item	Quantity	Unit	Unit Wt	Item Wt(lbs)

Waste Items by Volume

Material Item	Quantity	Unit	Unit Wt	Item Wt(lbs)
Iron	1.000	PINTS	7.807	7.810
Plastic	1.000	PINTS	0.937	0.940

Waste Parameters

Waste Parameter	Remaining Weight %	Actual Weight Lbs
Iron-based Metals/Alloys	0.000	7.810
Aluminum-based Metals/Alloys	0.000	0.000
Other metals	0.000	0.000
Other Inorganic Materials	0.000	0.000
Cellulosics	100.000	71.090
Rubber	0.000	0.000
Plastic (Waste Materials)	0.000	0.940
Inorganic matrix	0.000	0.000
Organic matrix	0.000	0.000
Soils/gravel	0.000	0.000
Steel (packaging materials)	0.000	26.000
Plastic (packaging materials)	0.000	0.000
Cellulosics Packaging	0.000	0.000

Esignature History

Esig Approval Id	User Id	E-signature Date	Comment
2687569	BHAWKE	05-FEB-14 02:34:41	
2687570	JBURTON	05-FEB-14 02:34:43	

VE Boxline and Repackaging Report

Batch Id VEB14-00026 **Container Id** 10511416 **Analysis Id** 0000314229

VE Date 05-FEB-14 02:53:13 **Analysis Status** Pass

Gen-IDC Code BN-508 AMWTP Newly Generated Debris **VE Weight** 143.33 lbs.

Closure Date 05-FEB-14 02:53:13 **Procedure Id** INST-FOI-17 **Net Weight** 117.33 lbs.

Container Type 55 **Revision** 27

Operator 1 BRIAN HAWKE **Waste Matrix** S5490 **Summary Category Group** S5000

Operator 2 JUSTIN BURTON **Equipment ID** VE BiD RPCK

General

Rigid Liner Present? No **Liner Type** NO LINER **Closure Method** No Bags

Liner Punctured? Yes **Layers Of Confinement** 0 **Fill Factor** 45 % **Liner Lid Present** No

Liquids

Liquids Present? No **Comment**

Liquid Between Liner and Drum 0 pints **Other Liquids** 0 pints

Containerized Liquid pints **Total Liquid Amount** 0 pints

Internal Container with Liquid 0 pints

Internal Container with Liquid No

Prohibited Liquids Present No

Containerized Liquid

Contents

Sharp Objects? Yes **Are Sharp Objects Protected?** No

	Value	*Comment*
Prohibited Compressed Gas Present?	No	
Explosives Present?	No	
Pyrophorics Present?	No	
Mercury Present?	No	
PCBs Present?	No	
PCB Mass (lbs)	0	
Wet Cell Batteries Present?	No	
Corrosives,Ignitables or Reactives Present?	No	
Beryllium Contaminates Present?	No	
Hazardous-Only Waste Present?	No	
Is Waste Incompatible with backfill, packaging materials, or shipping container materials?	No	
Sealed Containers Over 4L?	No	

IDC Verification

Is IDC correct? Yes **Recommended IDC** -

IDC Change Reason

Visual Exam Comment The remaining waste by weight percent is cellulosics consisting of wood.

Batch Id VEB14-00026 **Container Id** 10511416 **Analysis Id** 0000314229

Source Container

Is there a source container? Yes

Source Container ID	Location	IDC
10201459	destroyed @ 676- BXI/15	AE-100

IDC CODES

Current Container IDC Code: BN-508 **Recommended IDC Code:** -

Waste Material Items

Packaging Materials

Material Item	Quantity	Unit	Unit Wt	Item Wt(lbs)

Waste Items by Weight

Material Item	Quantity	Unit	Unit Wt	Item Wt(lbs)

Waste Items by Volume

Material Item	Quantity	Unit	Unit Wt	Item Wt(lbs)
Iron	1.000	PINTS	7.807	7.810
Plastic	1.000	PINTS	0.937	0.940

Waste Parameters

Waste Parameter	Remaining Weight %	Actual Weight Lbs
Iron-based Metals/Alloys	0.000	7.810
Aluminum-based Metals/Alloys	0.000	0.000
Other metals	0.000	0.000
Other Inorganic Materials	0.000	0.000
Cellulosics	100.000	108.575
Rubber	0.000	0.000
Plastic (Waste Materials)	0.000	0.940
Inorganic matrix	0.000	0.000
Organic matrix	0.000	0.000
Soils/gravel	0.000	0.000
Steel (packaging materials)	0.000	26.000
Plastic (packaging materials)	0.000	0.000
Cellulosics Packaging	0.000	0.000

Esignature History

Esig Approval Id	User Id	E-signature Date	Comment
2687576	BHAWKE	05-FEB-14 02:53:14	
2687577	JBURTON	05-FEB-14 02:53:16	

Batch Id VEB14-00026 **Container Id** 10511133 **Analysis Id** 0000314230

VE Date 05-FEB-14 03:08:28 **Analysis Status** Pass

Gen-IDC Code BN-508 AMWTP Newly Generated Debris **VE Weight** 97.02 lbs.

Closure Date 05-FEB-14 03:08:28 **Procedure Id** INST-FOI-17 **Net Weight** 71.02 lbs.

Container Type 55 **Revision** 27

Operator 1 NATHAN KEMPTON **Waste Matrix** S5490 **Summary Category Group** S5000

Operator 2 AARON FENN **Equipment ID** VE BiD RPCK

General

Rigid Liner Present? No **Liner Type** NO LINER **Closure Method** No Bags

Liner Punctured? Yes **Layers Of Confinement** 0 **Fill Factor** 60 % **Liner Lid Present** No

Liquids

Liquids Present? No **Comment**

Liquid Between Liner and Drum 0 pints **Other Liquids** 0 pints

Containerized Liquid pints **Total Liquid Amount** 0 pints

Internal Container with Liquid 0 pints

Internal Container with Liquid No

Prohibited Liquids Present No

Containerized Liquid

Contents

Sharp Objects? Yes **Are Sharp Objects Protected?** No

	Value	*Comment*
Prohibited Compressed Gas Present?	No	
Explosives Present?	No	
Pyrophorics Present?	No	
Mercury Present?	No	
PCBs Present?	No	
PCB Mass (lbs)	0	
Wet Cell Batteries Present?	No	
Corrosives,Ignitables or Reactives Present?	No	
Beryllium Contaminates Present?	No	
Hazardous-Only Waste Present?	No	
Is Waste Incompatible with backfill, packaging materials, or shipping container materials?	No	
Sealed Containers Over 4L?	No	

IDC Verification

Is IDC correct? Yes **Recommended IDC** -

IDC Change Reason

Visual Exam Comment Remaining waste by wieght percent is Iron-based Metals/Alloys consisting of scrap metal.

Batch Id VEB14-00026 **Container Id** 10511133 **Analysis Id** 0000314230

Source Container

Is there a source container? Yes

Source Container ID	Location	IDC
10130730	destroyed @ 676- BXI/9	AE-100

IDC CODES

Current Container IDC Code: BN-508 **Recommended IDC Code:** -

Waste Material Items

Packaging Materials

Material Item	Quantity	Unit	Unit Wt	Item Wt(lbs)

Waste Items by Weight

Material Item	Quantity	Unit	Unit Wt	Item Wt(lbs)

Waste Items by Volume

Material Item	Quantity	Unit	Unit Wt	Item Wt(lbs)
Wood	5.000	PINTS	0.702	3.510
Plastic	2.000	PINTS	0.937	1.870

Waste Parameters

Waste Parameter	Remaining Weight %	Actual Weight Lbs
Iron-based Metals/Alloys	100.000	65.640
Aluminum-based Metals/Alloys	0.000	0.000
Other metals	0.000	0.000
Other Inorganic Materials	0.000	0.000
Cellulosics	0.000	3.510
Rubber	0.000	0.000
Plastic (Waste Materials)	0.000	1.870
Inorganic matrix	0.000	0.000
Organic matrix	0.000	0.000
Soils/gravel	0.000	0.000
Steel (packaging materials)	0.000	26.000
Plastic (packaging materials)	0.000	0.000
Cellulosics Packaging	0.000	0.000

Esignature History

Esig Approval Id	User Id	E-signature Date	Comment
2687581	NKEMPTON	05-FEB-14 03:08:28	
2687582	AFENN	05-FEB-14 03:08:30	

Batch Id VEB14-00026 **Container Id** 10511134 **Analysis Id** 0000314231

VE Date 05-FEB-14 03:17:46 **Analysis Status** Pass

Gen-IDC Code BN-508 AMWTP Newly Generated Debris **VE Weight** 74.97 lbs.

Closure Date 05-FEB-14 03:17:46 **Procedure Id** INST-FOI-17 **Net Weight** 48.97 lbs.

Container Type 55 **Revision** 27

Operator 1 NATHAN KEMPTON **Waste Matrix** S5490 **Summary Category Group** S5000

Operator 2 AARON FENN **Equipment ID** VE BiD RPCK

---General---

Rigid Liner Present? No **Liner Type** NO LINER **Closure Method** No Bags

Liner Punctured? Yes **Layers Of Confinement** 0 **Fill Factor** 65 % **Liner Lid Present** No

---Liquids---

Liquids Present? No **Comment**

Liquid Between Liner and Drum 0 pints **Other Liquids** 0 pints

Containerized Liquid pints **Total Liquid Amount** 0 pints

Internal Container with Liquid 0 pints

Internal Container with Liquid No

Prohibited Liquids Present No

Containerized Liquid

---Contents---

Sharp Objects? No **Are Sharp Objects Protected?** Yes

	Value	*Comment*
Prohibited Compressed Gas Present?	No	
Explosives Present?	No	
Pyrophorics Present?	No	
Mercury Present?	No	
PCBs Present?	No	
PCB Mass (lbs)	0	
Wet Cell Batteries Present?	No	
Corrosives,Ignitables or Reactives Present?	No	
Beryllium Contaminates Present?	No	
Hazardous-Only Waste Present?	No	
Is Waste Incompatible with backfill, packaging materials, or shipping container materials?	No	
Sealed Containers Over 4L?	No	

---IDC Verification---

Is IDC correct? Yes **Recommended IDC** -

IDC Change Reason

Visual Exam Comment Remaining waste by wieght percent is Plastic consisting of bags, sheeting, PPE, and bubblesuits.

VE Boxline and Repackaging Report

Batch Id VEB14-00026 **Container Id** 10511134 **Analysis Id** 0000314231

Source Container

Is there a source container? Yes

Source Container ID	Location	IDC
10130730	destroyed @ 676- BXI/9	AE-100

IDC CODES

Current Container IDC Code: BN-508 **Recommended IDC Code:** -

Waste Material Items

Packaging Materials

Material Item	Quantity	Unit	Unit Wt	Item Wt(lbs)

Waste Items by Weight

Material Item	Quantity	Unit	Unit Wt	Item Wt(lbs)

Waste Items by Volume

Material Item	Quantity	Unit	Unit Wt	Item Wt(lbs)
Wood	5.000	PINTS	0.702	3.510

Waste Parameters

Waste Parameter	Remaining Weight %	Actual Weight Lbs
Iron-based Metals/Alloys	0.000	0.000
Aluminum-based Metals/Alloys	0.000	0.000
Other metals	0.000	0.000
Other Inorganic Materials	0.000	0.000
Cellulosics	0.000	3.510
Rubber	0.000	0.000
Plastic (Waste Materials)	100.000	45.460
Inorganic matrix	0.000	0.000
Organic matrix	0.000	0.000
Soils/gravel	0.000	0.000
Steel (packaging materials)	0.000	26.000
Plastic (packaging materials)	0.000	0.000
Cellulosics Packaging	0.000	0.000

Esignature History

Esig Approval Id	User Id	E-signature Date	Comment
2687584	NKEMPTON	05-FEB-14 03:17:46	
2687585	AFENN	05-FEB-14 03:17:48	

VE Boxline and Repackaging Report

Batch Id VEB14-00026 **Container Id** 10511393 **Analysis Id** 0000314232

VE Date 05-FEB-14 03:22:10 **Analysis Status** Pass

Gen-IDC Code BN-508 AMWTP Newly Generated Debris **VE Weight** 114.66 lbs.

Closure Date 05-FEB-14 03:22:10 **Procedure Id** INST-FOI-17 **Net Weight** 88.66 lbs.

Container Type 55 **Revision** 27

Operator 1 NATHAN KEMPTON **Waste Matrix** S5490 **Summary Category Group** S5000

Operator 2 AARON FENN **Equipment ID** VE BiD RPCK

General

Rigid Liner Present? No **Liner Type** NO LINER **Closure Method** No Bags

Liner Punctured? Yes **Layers Of Confinement** 0 **Fill Factor** 60 % **Liner Lid Present** No

Liquids

Liquids Present? No **Comment**

Liquid Between Liner and Drum 0 pints **Other Liquids** 0 pints

Containerized Liquid pints **Total Liquid Amount** 0 pints

Internal Container with Liquid 0 pints

Internal Container with Liquid No

Prohibited Liquids Present No

Containerized Liquid

Contents

Sharp Objects? Yes **Are Sharp Objects Protected?** No

	Value	*Comment*
Prohibited Compressed Gas Present?	No	
Explosives Present?	No	
Pyrophorics Present?	No	
Mercury Present?	No	
PCBs Present?	No	
PCB Mass (lbs)	0	
Wet Cell Batteries Present?	No	
Corrosives,Ignitables or Reactives Present?	No	
Beryllium Contaminates Present?	No	
Hazardous-Only Waste Present?	No	
Is Waste Incompatible with backfill, packaging materials, or shipping container materials?	No	
Sealed Containers Over 4L?	No	

IDC Verification

Is IDC correct? Yes **Recommended IDC** -

IDC Change Reason

Visual Exam Comment Remaining waste by wieght percent is Iron-based Metals/Alloys consisting of scrap metal

Batch Id VEB14-00026 **Container Id** 10511393 **Analysis Id** 0000314232

---Source Container---

Is there a source container? Yes

Source Container ID	Location	IDC
10130730	destroyed @ 676- BXI/9	AE-100

---IDC CODES---

Current Container IDC Code: BN-508 **Recommended IDC Code:** -

--- Waste Material Items---

---Packaging Materials---

Material Item	Quantity	Unit	Unit Wt	Item Wt(lbs)

---Waste Items by Weight---

Material Item	Quantity	Unit	Unit Wt	Item Wt(lbs)

---Waste Items by Volume---

Material Item	Quantity	Unit	Unit Wt	Item Wt(lbs)

---Waste Parameters---

Waste Parameter	Remaining Weight %	Actual Weight Lbs
Iron-based Metals/Alloys	100.000	88.660
Aluminum-based Metals/Alloys	0.000	0.000
Other metals	0.000	0.000
Other Inorganic Materials	0.000	0.000
Cellulosics	0.000	0.000
Rubber	0.000	0.000
Plastic (Waste Materials)	0.000	0.000
Inorganic matrix	0.000	0.000
Organic matrix	0.000	0.000
Soils/gravel	0.000	0.000
Steel (packaging materials)	0.000	26.000
Plastic (packaging materials)	0.000	0.000
Cellulosics Packaging	0.000	0.000

---Esignature History---

Esig Approval Id	User Id	E-signature Date	Comment
2687586	NKEMPTON	05-FEB-14 03:22:10	
2687587	AFENN	05-FEB-14 03:22:11	

-----End of VE Boxline Report-----

Batch Id VEB14-00026 **Open Date** 04-FEB-14 **Close Date** 05-FEB-14

Reviewer RONALD GRISE **Approval Level** Independent Technical Reviewer

Approval Date 06-FEB-14 **Review Iteration** 1

Question Text	Answer	Requirement	Comment
1. Is the QA documentation for the Batch Data Reports complete and includes data reports and QC results? o VE Batch Coversheet o Table of Contents (manual review only) o VE Analysis Reports o Analytical Balance Calibration Check Sheet (Form-1215), if applicable (manual review only) o ITR Checklist (Form-1415, manual review only) o Batch Data Report Supplemental Comment Form (Form-1491, manual review only) o Associated NCRs (referenced in WTS) o Audio/Video Recording References, if applicable	Yes		
2. Are there 20 containers or less in the batch?	Yes		
3. Was each VE Operator qualified at the time of the VE event?	Yes		
4. Was a VE data form completed for each container in the batch?	Yes		
Was the data generated in a technically correct manner using the correct revision of INST-OI-34, Non-facility Visual Examination or INST-FOI-17, Facility Visual Examination Operations, as applicable.	Yes		
6. Was the correct revision of the procedure documented on each analysis report?	Yes		
7. Was the E-signature History review performed?	Yes		
8. Was guidance from VEE documented, as applicable?	N/A		
9. Does every drum reported in the batch have a valid audio/video recording (as applicable)?	N/A		
10. Does the physical form match the waste stream description, waste matrix code and IDC?	Yes		
11. Did the VE event result in an IDC/Waste Matrix Code change? If so, was an NCR initiated?	No		
12. Were the waste material parameters documented correctly?	Yes		
13. Was the presence or absence of prohibited items properly identified? o If prohibited items were identified, were NCRs initiated?	Yes		
14. Has the description of rigid liners and layers of confinement been properly documented?	Yes		
15. Was the drum age criteria (DAC) entered correctly and completely? o Closure Method(s) o Liner Puncture Status o Layers of Confinement o Closure Date o Packaging Configuration o Type and number of filters, as applicable o Liner hole presence and diameter, as applicable	Yes		
16. Have filters been installed or removed from drum as recorded in WTS, as applicable?	N/A		
17. Hand calculations and unit conversions are correct? o Does the packaging weight plus the net weight equal the gross weight of the drum in the estimated waste material parameters, and for the unit conversions that are entered by volume or weight?	Yes		
18. Were all units and significant figures used correct for all reported volumes/weights?	Yes		

Batch Id VEB14-00026 **Open Date** 04-FEB-14 **Close Date** 05-FEB-14

Reviewer RONALD GRISE **Approval Level** Independent Technical Reviewer

Approval Date 06-FEB-14 **Review Iteration** 1

Question Text	Answer	Requirement	Comment
19. Has the data been reviewed for transcription errors as appropriate?	Yes		
20. Were the Visual Examination QAOs met? o Precision o Accuracy o Completeness o Comparability	Yes		
21. Is each data form signed by qualified VE Operators, as applicable per the appropriate procedure being used?	Yes		
22. Was the audio/video check satisfactory, as applicable?	N/A		
23. Was the scale or balance check weight event satisfactory, as applicable?	N/A		
24. Are the QC weight checks within the tolerance of the scale or balance, as applicable?	N/A		
25. Were any NCRs generated for drums containing prohibited items or any nonconforming conditions that failed to meet DQOs or QAOs? o Include the NCRs as appropriate, in the Batch Data Report.	No		
26. Were the rework requirements clearly identified in WTS or on the BDR?	N/A		

Batch Id VEB14-00026 **Open Date** 04-FEB-14 **Close Date** 05-FEB-14

Reviewer REED WALKER **Approval Level** SPM Data Validation

Approval Date 11-FEB-14 **Review Iteration** 1

Question Text	Answer	Requirement	Comment
(1) Has the batch received a Data Generation Level Independent Technical Review?	Yes	MP-TRUW-8.2, C3-10b(1)	
(2) Are the batch data review checklists complete?	Yes	MP-TRUW-8.2, C3-10b(1)	
(3) When identified, were PCBs, mercury, lead, or other hazardous contaminants consistent with the waste stream AK Summary Report(s) and/or AK documentation?	N/A	MP-TRUW-8.2, C4-3	None were identified.
(4) Are any ignitable, corrosive, or reactive wastes identified?	No	MP-TRUW-8.2, C4-3	
(5) Are the packaging configurations identified on the VE consistent with the waste stream AK Summary Report(s) and/or AK documentation?	Yes	MP-TRUW-8.2, C4-3	
(6) Do the drums in this batch contain typical waste items consistent with waste stream AK Summary Report(s) and/or AK documentation?	Yes	MP-TRUW-8.2, C4-3	
(7) Are the Waste Matrix Codes and physical form descriptions consistent with AK?	Yes	MP-TRUW-8.2, C4-3	
(8) Have all AK discrepancies been resolved and have all AK Resolution checklists been approved? Reference all waste stream AK documentation used in review of this data package.	N/A	MP-TRUW-8.2, C4-3	No discrepancies identified.
(9) Does the batch report identify the correct implementing procedure number and revision number used for this testing method?	Yes	MP-TRUW-8.2, C3-4 and Table C3-11	
(10) Have the Waste Matrix Code (WMC) and IDC for all drums in the batch remained the same as originally assigned by the historical designation? NOTE: If not, note the drum number in the comment field and notify the Acceptable Knowledge Expert (AKE) if an NCR does not exist for the WMC and IDC change.	Yes	MP-TRUW-8.2, C-3c and C1-4	
(11) Does the physical form of the waste match the WMC, waste stream description, and identify the absence of prohibited items?	Yes	MP-TRUW-8.2, C-3c and C1-4	
(12) If observable liquids exist in the drum, is an estimate of quantity given?	N/A	MP-TRUW-8.2, C-3c and C1-4	No liquids identified.
(13) Precision: Have all discrepancies been reconciled between the operator and the ITR with regard to identification of WMC, liquids in excess of TSDF-WAC limits, and compressed gases?	Yes	MP-TRUW-8.2 C3-4b	
(14) Accuracy: Have all operators passed a comprehensive examination and demonstrated satisfactory performance in the presence of the VE expert during initial and subsequent qualifications?	Yes	MP-TRUW-8.2 C3-4b	
(15) Completeness: Has a validated VE data form been obtained for 100% of the waste containers subject to VE?	Yes	MP-TRUW-8.2 C3-4b	
(16) Comparability: Has the comparability of VE data from different operators been enhanced by use of standardized VE procedures and operator qualifications?	Yes	MP-TRUW-8.2 C3-4b	
(17) Does the data for all containers within this batch meet the review, validation, and verification requirements? · Are proper units (e.g. Liters or pounds) and significant figure used? · Is the BDR complete (all pages identified in the BDR and numbered according)? - VE Batch Coversheet - Table of Contents (manual review only) - VE Analysis Reports - Analytical Balance Calibration Checklist (if applicable) - ITR Checklist (Form-1415)	Yes	MP-TRUW-8.2, C3-10b and Table C3-11	

Batch Id VEB14-00026 **Open Date** 04-FEB-14 **Close Date** 05-FEB-14

Reviewer REED WALKER **Approval Level** SPM Data Validation

Approval Date 11-FEB-14 **Review Iteration** 1

Question Text	Answer	Requirement	Comment
- Associated NCRs - Audio/Video Recordings (if applicable)			
(18) Do the drum reports contain the (a) Batch Data Report number and date, (b) waste container number (c)WMC, (d) implementing procedure and revision, (e) audio/video recording reference, (f) audio and video QC checks were performed and satisfactory, (g) verification that the physical form matches the waste stream description and WMC, (h) absence of prohibited items, (i) gross container weight, (j) waste material parameter weights, and (k) signature and date of examination (signatures of both operators when applicable)?	Yes	MP-TRUW-8.2, C1-4 and Table C3-11	
(19) Is the description of container contents detailed enough to provide verification of estimated weights for the waste matrix parameters identified?	Yes	MP-TRUW-8.2, C1-4 and Table C3-11	
(20) Is there a valid second weight check for every 10 items?	N/A	MP-TRUW-8.2, C1-4	Not required for this batch.
(21) Verification of two operator signatures when doing VE?	Yes	MP-TRUW-8.2, C-3d(1) and Table C3-11	
(22) Are there 20 or fewer containers in the batch?	Yes	MP-TRUW-8.2, C1-3 and C3-10	
(23) Review all NCRs (open and closed). Can the batch be approved?	Yes	MP-TRUW-8.2, C3-13	No NCRs.
(24) All data associated with this BDR is acceptable for signature release?	Yes	MP-TRUW-8.2, C3-10b and C3-10b(1)	

Batch Id VEB14-00026 **Open Date** 04-FEB-14 **Close Date** 05-FEB-14

Esignature History

Esig Approval ID	User ID	Esig Date	Approval Level	Comments
2692196	RWALKER	11-FEB-14	SPM	SPM validation complete. Promote batch.
2688813	RGRISE	06-FEB-14	ITR	Promote batch to SPM level.

AMWTP
Advanced Mixed Waste Treatment Project

AMWTP

Non-Conformance Report

Date: 26-Sep-2014

Time: 09:52

*****Batch NCR(s)*****

Batch Type VEB	**Batch ID** VEB14-00026		
Trackwise Number	**Status**	**Opened Date**	**Closed Date**

*****Container NCR(s)*****

Container ID *or related Batch ID*	**Trackwise Number**	**Status**	**Opened Date**	**Closed Date**

*****End of Non-Conformance Report*****

AMWTP
Advanced Mixed Waste Treatment Project

AMWTP

Date: 26-Sep-2014

Time: 09:52

Scale Check Event Report

Batch Id	VEB14-00026	**Container Id**	10511143
Batch Id	VEB14-00026	**Container Id**	10510986
Batch Id	VEB14-00026	**Container Id**	10511145
Batch Id	VEB14-00026	**Container Id**	10511141
Batch Id	VEB14-00026	**Container Id**	10511137
Batch Id	VEB14-00026	**Container Id**	10511139
Batch Id	VEB14-00026	**Container Id**	10511416
Batch Id	VEB14-00026	**Container Id**	10511133
Batch Id	VEB14-00026	**Container Id**	10511134
Batch Id	VEB14-00026	**Container Id**	10511142
Batch Id	VEB14-00026	**Container Id**	10511140
Batch Id	VEB14-00026	**Container Id**	10511135
Batch Id	VEB14-00026	**Container Id**	10511136
Batch Id	VEB14-00026	**Container Id**	10511393
Batch Id	VEB14-00026	**Container Id**	10511147
Batch Id	VEB14-00026	**Container Id**	10511146
Batch Id	VEB14-00026	**Container Id**	10511144
Batch Id	VEB14-00026	**Container Id**	10511132
Batch Id	VEB14-00026	**Container Id**	10511138
Batch Id	VEB14-00026	**Container Id**	10511417

DIVIDER

PAGE

AMWTP
Advanced Mixed Waste Treatment Project

AMWTP

Batch Report Coversheet

Date: 26-Sep-2014

Time: 10:16

Batch Type VE Boxline
Batch Report No. VEB14-00054
Batch Id VEB14-00054
Open Date 17-FEB-14 20:12:19
Close Date 18-FEB-14 05:07:31
Batch Status AP
Test Facility Idaho AMWTP
Equipment Id VE BiD RPCK VE Box Repackaging Into Drums

Container Id	IDC	Analysis Id	Date Examined	QC Type	Analysis Status	Operator
10512684	BN-508	0000315026	17-FEB-14 20:12:19	Original	P	MIKE REIDER
10512680	BN-508	0000315027	17-FEB-14 21:24:37	Original	P	MIKE REIDER
10512687	BN-508	0000315031	17-FEB-14 22:18:50	Original	P	MIKE REIDER
10512686	BN-508	0000315033	17-FEB-14 22:25:48	Original	P	MIKE REIDER
10512679	BN-508	0000315034	17-FEB-14 22:49:47	Original	P	MIKE REIDER
10512685	BN-508	0000315035	17-FEB-14 23:58:36	Original	P	MIKE REIDER
10512677	BN-508	0000315036	18-FEB-14 00:10:45	Original	P	MIKE REIDER
10512688	BN-508	0000315037	18-FEB-14 00:40:48	Original	P	MIKE REIDER
10512678	BN-508	0000315038	18-FEB-14 00:46:23	Original	P	MIKE REIDER
10512676	BN-508	0000315039	18-FEB-14 01:05:36	Original	P	MIKE REIDER
10512689	BN-508	0000315040	18-FEB-14 01:12:58	Original	P	MIKE REIDER
10512675	BN-508	0000315041	18-FEB-14 01:39:31	Original	P	MIKE REIDER
10512706	BN-508	0000315042	18-FEB-14 02:08:01	Original	P	MIKE REIDER
10512715	BN-508	0000315043	18-FEB-14 02:38:11	Original	P	MIKE REIDER
10512714	BN-508	0000315044	18-FEB-14 02:45:13	Original	P	MIKE REIDER
10512707	BN-508	0000315045	18-FEB-14 03:07:50	Original	P	MIKE REIDER
10512708	BN-508	0000315046	18-FEB-14 03:25:55	Original	P	MIKE REIDER
10512717	BN-508	0000315047	18-FEB-14 04:34:33	Original	P	MIKE REIDER
10512716	BN-508	0000315048	18-FEB-14 04:39:07	Original	P	MIKE REIDER
10512710	BN-508	0000315049	18-FEB-14 05:06:31	Original	P	MIKE REIDER

INFORMATION ONLY

**********Batch Comments**********

Written By	Date	Comment
LJWALKER	19-FEB-14 15:16:01	Initial Review
LJWALKER	19-FEB-14 16:03:46	Review Complete
NSTYHL	20-FEB-14 11:13:45	SPM review complete.
NSTYHL	20-FEB-14 11:13:45	Approve batch.

**********Batch E-Signature History**********

Approval ID	User ID	Signature Date	Comment
2700215	LJWALKER	19-FEB-2014 16:03:46	Review Complete
2700874	NSTYHL	20-FEB-2014 11:13:45	Approve batch.

***** End of Batch Report Coversheet Report *****

AMWTP
Advanced Mixed Waste Treatment Project

AMWTP

VE Boxline and Repackaging Report

Date: 26-Sep-2014

Time: 10:17

Batch Id VEB14-00054 **Container Id** 10512684 **Analysis Id** 0000315026

VE Date 17-FEB-14 20:12:19 **Analysis Status** Pass

Gen-IDC Code BN-508 AMWTP Newly Generated Debris **VE Weight** 132.30 lbs.

Closure Date 17-FEB-14 20:12:19 **Procedure Id** INST-FOI-17 **Net Weight** 106.30 lbs.

Container Type 55 **Revision** 27

Operator 1 MIKE REIDER **Waste Matrix** S5490 **Summary Category Group** S5000

Operator 2 JEFFREY K BAILEY **Equipment ID** VE BiD RPCK

General

Rigid Liner Present? No **Liner Type** NO LINER **Closure Method** No Bags

Liner Punctured? Yes **Layers Of Confinement** 0 **Fill Factor** 70 % **Liner Lid Present** No

Liquids

Liquids Present? No **Comment**

Liquid Between Liner and Drum 0 pints **Other Liquids** 0 pints

Containerized Liquid pints **Total Liquid Amount** 0 pints

Internal Container with Liquid 0 pints

Internal Container with Liquid No

Prohibited Liquids Present No

Containerized Liquid

Contents

Sharp Objects? Yes **Are Sharp Objects Protected?** No

	Value	*Comment*
Prohibited Compressed Gas Present?	No	
Explosives Present?	No	
Pyrophorics Present?	No	
Mercury Present?	No	
PCBs Present?	No	
PCB Mass (lbs)	0	
Wet Cell Batteries Present?	No	
Corrosives,Ignitables or Reactives Present?	No	
Beryllium Contaminates Present?	No	
Hazardous-Only Waste Present?	No	
Is Waste Incompatible with backfill, packaging materials, or shipping container materials?	No	
Sealed Containers Over 4L?	No	

IDC Verification

Is IDC correct? Yes **Recommended IDC** -

IDC Change Reason

Visual Exam Comment Remaining waste by weight percent is misc. iron based metal alloys consisting of drums, lids and rings

AMWTP

VE Boxline and Repackaging Report

Date: 26-Sep-2014

Time: 10:17

Batch Id VEB14-00054 **Container Id** 10512684 **Analysis Id** 0000315026

Source Container

Is there a source container? Yes

Source Container ID	Location	IDC
10252382	destroyed @ 676- BXI/15	AE-100

IDC CODES

Current Container IDC Code: BN-508 **Recommended IDC Code:** -

Waste Material Items

Packaging Materials

Material Item	Quantity	Unit	Unit Wt	Item Wt(lbs)

Waste Items by Weight

Material Item	Quantity	Unit	Unit Wt	Item Wt(lbs)

Waste Items by Volume

Material Item	Quantity	Unit	Unit Wt	Item Wt(lbs)

Waste Parameters

Waste Parameter	Remaining Weight %	Actual Weight Lbs
Iron-based Metals/Alloys	100.000	106.300
Aluminum-based Metals/Alloys	0.000	0.000
Other metals	0.000	0.000
Other Inorganic Materials	0.000	0.000
Cellulosics	0.000	0.000
Rubber	0.000	0.000
Plastic (Waste Materials)	0.000	0.000
Inorganic matrix	0.000	0.000
Organic matrix	0.000	0.000
Soils/gravel	0.000	0.000
Steel (packaging materials)	0.000	26.000
Plastic (packaging materials)	0.000	0.000
Cellulosics Packaging	0.000	0.000

Esignature History

Esig Approval Id	User Id	E-signature Date	Comment
2698092	MREIDER	17-FEB-14 20:12:20	
2698093	JBAILEY	17-FEB-14 20:12:22	

Batch Id VEB14-00054 **Container Id** 10512680 **Analysis Id** 0000315027

VE Date 17-FEB-14 21:24:37 **Analysis Status** Pass

Gen-IDC Code BN-508 AMWTP Newly Generated Debris **VE Weight** 92.61 lbs.

Closure Date 17-FEB-14 21:24:37 **Procedure Id** INST-FOI-17 **Net Weight** 66.61 lbs.

Container Type 55 **Revision** 27

Operator 1 MIKE REIDER **Waste Matrix** S5490 **Summary Category Group** S5000

Operator 2 JEFFREY K BAILEY **Equipment ID** VE BiD RPCK

General

Rigid Liner Present? No **Liner Type** NO LINER **Closure Method** No Bags

Liner Punctured? Yes **Layers Of Confinement** 0 **Fill Factor** 75 % **Liner Lid Present** No

Liquids

Liquids Present? No **Comment**

Liquid Between Liner and Drum 0 pints **Other Liquids** 0 pints

Containerized Liquid pints **Total Liquid Amount** 0 pints

Internal Container with Liquid 0 pints

Internal Container with Liquid No

Prohibited Liquids Present No

Containerized Liquid

Contents

Sharp Objects? No **Are Sharp Objects Protected?** Yes

	Value	*Comment*
Prohibited Compressed Gas Present?	No	
Explosives Present?	No	
Pyrophorics Present?	No	
Mercury Present?	No	
PCBs Present?	No	
PCB Mass (lbs)	0	
Wet Cell Batteries Present?	No	
Corrosives,Ignitables or Reactives Present?	No	
Beryllium Contaminates Present?	No	
Hazardous-Only Waste Present?	No	
Is Waste Incompatible with backfill, packaging materials, or shipping container materials?	No	
Sealed Containers Over 4L?	No	

IDC Verification

Is IDC correct? Yes **Recommended IDC** -

IDC Change Reason

Visual Exam Comment Remaining waste by weight percent is misc. plastics, plastic bags, sheeting and poly bottles

VE Boxline and Repackaging Report

Batch Id VEB14-00054 **Container Id** 10512680 **Analysis Id** 0000315027

Source Container

Is there a source container? Yes

Source Container ID	Location	IDC
10252382	destroyed @ 676- BXI/15	AE-100

IDC CODES

Current Container IDC Code: BN-508 **Recommended IDC Code:** -

Waste Material Items

Packaging Materials

Material Item	Quantity	Unit	Unit Wt	Item Wt(lbs)

Waste Items by Weight

Material Item	Quantity	Unit	Unit Wt	Item Wt(lbs)

Waste Items by Volume

Material Item	Quantity	Unit	Unit Wt	Item Wt(lbs)
Rubber	4.000	PINTS	1.554	6.220
Cloth Material	3.000	PINTS	2.000	6.000

Waste Parameters

Waste Parameter	Remaining Weight %	Actual Weight Lbs
Iron-based Metals/Alloys	0.000	0.000
Aluminum-based Metals/Alloys	0.000	0.000
Other metals	0.000	0.000
Other Inorganic Materials	0.000	0.000
Cellulosics	0.000	6.000
Rubber	0.000	6.220
Plastic (Waste Materials)	100.000	54.390
Inorganic matrix	0.000	0.000
Organic matrix	0.000	0.000
Soils/gravel	0.000	0.000
Steel (packaging materials)	0.000	26.000
Plastic (packaging materials)	0.000	0.000
Cellulosics Packaging	0.000	0.000

Esignature History

Esig Approval Id	User Id	E-signature Date	Comment
2698096	MREIDER	17-FEB-14 21:24:37	
2698097	JBAILEY	17-FEB-14 21:24:39	

VE Boxline and Repackaging Report

Batch Id VEB14-00054 **Container Id** 10512687 **Analysis Id** 0000315031

VE Date 17-FEB-14 22:18:50 **Analysis Status** Pass

Gen-IDC Code BN-508 AMWTP Newly Generated Debris **VE Weight** 127.89 lbs.

Closure Date 17-FEB-14 22:18:50 **Procedure Id** INST-FOI-17 **Net Weight** 101.89 lbs.

Container Type 55 **Revision** 27

Operator 1 MIKE REIDER **Waste Matrix** S5490 **Summary Category Group** S5000

Operator 2 JEFFREY K BAILEY **Equipment ID** VE BiD RPCK

General

Rigid Liner Present? No **Liner Type** NO LINER **Closure Method** No Bags

Liner Punctured? Yes **Layers Of Confinement** 0 **Fill Factor** 70 % **Liner Lid Present** No

Liquids

Liquids Present? No **Comment**

Liquid Between Liner and Drum 0 pints **Other Liquids** 0 pints

Containerized Liquid pints **Total Liquid Amount** 0 pints

Internal Container with Liquid 0 pints

Internal Container with Liquid No

Prohibited Liquids Present No

Containerized Liquid

Contents

Sharp Objects? Yes **Are Sharp Objects Protected?** No

	Value	*Comment*
Prohibited Compressed Gas Present?	No	
Explosives Present?	No	
Pyrophorics Present?	No	
Mercury Present?	No	
PCBs Present?	No	
PCB Mass (lbs)	0	
Wet Cell Batteries Present?	No	
Corrosives,Ignitables or Reactives Present?	No	
Beryllium Contaminates Present?	No	
Hazardous-Only Waste Present?	No	
Is Waste Incompatible with backfill, packaging materials, or shipping container materials?	No	
Sealed Containers Over 4L?	No	

IDC Verification

Is IDC correct? Yes **Recommended IDC** -

IDC Change Reason

Visual Exam Comment Remaining waste by weight percent is misc. iron based metal alloys consisting of metal drums, rings and lids

VE Boxline and Repackaging Report

Batch Id VEB14-00054 **Container Id** 10512687 **Analysis Id** 0000315031

Source Container

Is there a source container? Yes

Source Container ID	Location	IDC
10252382	destroyed @ 676- BXI/15	AE-100

IDC CODES

Current Container IDC Code: BN-508 **Recommended IDC Code:** -

Waste Material Items

Packaging Materials

Material Item	Quantity	Unit	Unit Wt	Item Wt(lbs)

Waste Items by Weight

Material Item	Quantity	Unit	Unit Wt	Item Wt(lbs)

Waste Items by Volume

Material Item	Quantity	Unit	Unit Wt	Item Wt(lbs)
Rubber	1.000	PINTS	1.554	1.550
Plastic	1.000	PINTS	0.937	0.940

Waste Parameters

Waste Parameter	Remaining Weight %	Actual Weight Lbs
Iron-based Metals/Alloys	100.000	99.400
Aluminum-based Metals/Alloys	0.000	0.000
Other metals	0.000	0.000
Other Inorganic Materials	0.000	0.000
Cellulosics	0.000	0.000
Rubber	0.000	1.550
Plastic (Waste Materials)	0.000	0.940
Inorganic matrix	0.000	0.000
Organic matrix	0.000	0.000
Soils/gravel	0.000	0.000
Steel (packaging materials)	0.000	26.000
Plastic (packaging materials)	0.000	0.000
Cellulosics Packaging	0.000	0.000

Esignature History

Esig Approval Id	User Id	E-signature Date	Comment
2698105	MREIDER	17-FEB-14 22:18:51	
2698106	JBAILEY	17-FEB-14 22:18:52	

Batch Id VEB14-00054 **Container Id** 10512686 **Analysis Id** 0000315033

VE Date 17-FEB-14 22:25:48 **Analysis Status** Pass

Gen-IDC Code BN-508 AMWTP Newly Generated Debris **VE Weight** 123.48 lbs.

Closure Date 17-FEB-14 22:25:48 **Procedure Id** INST-FOI-17 **Net Weight** 97.48 lbs.

Container Type 55 **Revision** 27

Operator 1 MIKE REIDER **Waste Matrix** S5490 **Summary Category Group** S5000

Operator 2 JEFFREY K BAILEY **Equipment ID** VE BiD RPCK

General

Rigid Liner Present? No **Liner Type** NO LINER **Closure Method** No Bags

Liner Punctured? Yes **Layers Of Confinement** 0 **Fill Factor** 75 % **Liner Lid Present** No

Liquids

Liquids Present? No **Comment**

Liquid Between Liner and Drum 0 pints **Other Liquids** 0 pints

Containerized Liquid pints **Total Liquid Amount** 0 pints

Internal Container with Liquid 0 pints

Internal Container with Liquid No

Prohibited Liquids Present No

Containerized Liquid

Contents

Sharp Objects? No **Are Sharp Objects Protected?** Yes

	Value	*Comment*
Prohibited Compressed Gas Present?	No	
Explosives Present?	No	
Pyrophorics Present?	No	
Mercury Present?	No	
PCBs Present?	No	
PCB Mass (lbs)	0	
Wet Cell Batteries Present?	No	
Corrosives,Ignitables or Reactives Present?	No	
Beryllium Contaminates Present?	No	
Hazardous-Only Waste Present?	No	
Is Waste Incompatible with backfill, packaging materials, or shipping container materials?	No	
Sealed Containers Over 4L?	No	

IDC Verification

Is IDC correct? Yes **Recommended IDC** -

IDC Change Reason

Visual Exam Comment Remaining waste by weight percent is misc. plastics, plastic bags, sheeting, poly bottles and ppe

Batch Id VEB14-00054 **Container Id** 10512686 **Analysis Id** 0000315033

Source Container

Is there a source container? Yes

Source Container ID	Location	IDC
10252382	destroyed @ 676- BXI/15	AE-100

IDC CODES

Current Container IDC Code: BN-508 **Recommended IDC Code:** -

Waste Material Items

Packaging Materials

Material Item	Quantity	Unit	Unit Wt	Item Wt(lbs)

Waste Items by Weight

Material Item	Quantity	Unit	Unit Wt	Item Wt(lbs)

Waste Items by Volume

Material Item	Quantity	Unit	Unit Wt	Item Wt(lbs)
Paper	2.000	PINTS	0.969	1.940
Rubber	3.000	PINTS	1.554	4.660
Cloth Material	4.000	PINTS	2.000	8.000

Waste Parameters

Waste Parameter	Remaining Weight %	Actual Weight Lbs
Iron-based Metals/Alloys	0.000	0.000
Aluminum-based Metals/Alloys	0.000	0.000
Other metals	0.000	0.000
Other Inorganic Materials	0.000	0.000
Cellulosics	0.000	9.940
Rubber	0.000	4.660
Plastic (Waste Materials)	100.000	82.880
Inorganic matrix	0.000	0.000
Organic matrix	0.000	0.000
Soils/gravel	0.000	0.000
Steel (packaging materials)	0.000	26.000
Plastic (packaging materials)	0.000	0.000
Cellulosics Packaging	0.000	0.000

Esignature History

Esig Approval Id	User Id	E-signature Date	Comment
2698111	MREIDER	17-FEB-14 22:25:50	
2698112	JBAILEY	17-FEB-14 22:25:58	

Batch Id VEB14-00054 **Container Id** 10512679 **Analysis Id** 0000315034

VE Date 17-FEB-14 22:49:47 **Analysis Status** Pass

Gen-IDC Code BN-508 AMWTP Newly Generated Debris **VE Weight** 156.56 lbs.

Closure Date 17-FEB-14 22:49:47 **Procedure Id** INST-FOI-17 **Net Weight** 130.56 lbs.

Container Type 55 **Revision** 27

Operator 1 MIKE REIDER **Waste Matrix** S5490 **Summary Category Group** S5000

Operator 2 JEFFREY K BAILEY **Equipment ID** VE BiD RPCK

General

Rigid Liner Present? No **Liner Type** NO LINER **Closure Method** No Bags

Liner Punctured? Yes **Layers Of Confinement** 0 **Fill Factor** 65 % **Liner Lid Present** No

Liquids

Liquids Present? No **Comment**

Liquid Between Liner and Drum 0 pints **Other Liquids** 0 pints

Containerized Liquid pints **Total Liquid Amount** 0 pints

Internal Container with Liquid 0 pints

Internal Container with Liquid No

Prohibited Liquids Present No

Containerized Liquid

Contents

Sharp Objects? No **Are Sharp Objects Protected?** Yes

	Value	*Comment*
Prohibited Compressed Gas Present?	No	
Explosives Present?	No	
Pyrophorics Present?	No	
Mercury Present?	No	
PCBs Present?	No	
PCB Mass (lbs)	0	
Wet Cell Batteries Present?	No	
Corrosives,Ignitables or Reactives Present?	No	
Beryllium Contaminates Present?	No	
Hazardous-Only Waste Present?	No	
Is Waste Incompatible with backfill, packaging materials, or shipping container materials?	No	
Sealed Containers Over 4L?	No	

IDC Verification

Is IDC correct? Yes **Recommended IDC** -

IDC Change Reason

Visual Exam Comment Remaining waste by weight percent is misc. plastics, plastic bags, sheeting, ppe

Batch Id VEB14-00054 **Container Id** 10512679 **Analysis Id** 0000315034

Source Container

Is there a source container? Yes

Source Container ID	Location	IDC
10252382	destroyed @ 676- BXI/15	AE-100

IDC CODES

Current Container IDC Code: BN-508 **Recommended IDC Code:** -

Waste Material Items

Packaging Materials

Material Item	Quantity	Unit	Unit Wt	Item Wt(lbs)

Waste Items by Weight

Material Item	Quantity	Unit	Unit Wt	Item Wt(lbs)

Waste Items by Volume

Material Item	Quantity	Unit	Unit Wt	Item Wt(lbs)
Paper	2.000	PINTS	0.969	1.940
Rubber	3.000	PINTS	1.554	4.660
Cloth Material	3.000	PINTS	2.000	6.000

Waste Parameters

Waste Parameter	Remaining Weight %	Actual Weight Lbs
Iron-based Metals/Alloys	0.000	0.000
Aluminum-based Metals/Alloys	0.000	0.000
Other metals	0.000	0.000
Other Inorganic Materials	0.000	0.000
Cellulosics	0.000	7.940
Rubber	0.000	4.660
Plastic (Waste Materials)	100.000	117.955
Inorganic matrix	0.000	0.000
Organic matrix	0.000	0.000
Soils/gravel	0.000	0.000
Steel (packaging materials)	0.000	26.000
Plastic (packaging materials)	0.000	0.000
Cellulosics Packaging	0.000	0.000

Esignature History

Esig Approval Id	User Id	E-signature Date	Comment
2698119	MREIDER	17-FEB-14 22:49:47	
2698120	JBAILEY	17-FEB-14 22:49:49	

Batch Id VEB14-00054 **Container Id** 10512685 **Analysis Id** 0000315035

VE Date 17-FEB-14 23:58:36 **Analysis Status** Pass

Gen-IDC Code BN-508 AMWTP Newly Generated Debris **VE Weight** 50.72 lbs.

Closure Date 17-FEB-14 23:58:36 **Procedure Id** INST-FOI-17 **Net Weight** 24.72 lbs.

Container Type 55 **Revision** 27

Operator 1 MIKE REIDER **Waste Matrix** S5490 **Summary Category Group** S5000

Operator 2 JEFFREY K BAILEY **Equipment ID** VE BiD RPCK

---General---

Rigid Liner Present? No **Liner Type** NO LINER **Closure Method** No Bags

Liner Punctured? Yes **Layers Of Confinement** 0 **Fill Factor** 80 % **Liner Lid Present** No

---Liquids---

Liquids Present? No **Comment**

Liquid Between Liner and Drum 0 pints **Other Liquids** 0 pints

Containerized Liquid pints **Total Liquid Amount** 0 pints

Internal Container with Liquid 0 pints

Internal Container with Liquid No

Prohibited Liquids Present No

Containerized Liquid

---Contents---

Sharp Objects? No **Are Sharp Objects Protected?** Yes

	Value	*Comment*
Prohibited Compressed Gas Present?	No	
Explosives Present?	No	
Pyrophorics Present?	No	
Mercury Present?	No	
PCBs Present?	No	
PCB Mass (lbs)	0	
Wet Cell Batteries Present?	No	
Corrosives,Ignitables or Reactives Present?	No	
Beryllium Contaminates Present?	No	
Hazardous-Only Waste Present?	No	
Is Waste Incompatible with backfill, packaging materials, or shipping container materials?	No	
Sealed Containers Over 4L?	No	

---IDC Verification---

Is IDC correct? Yes **Recommended IDC** -

IDC Change Reason

Visual Exam Comment Remaining waste by weight percent is misc. plastics, plastic sheeting

Batch Id VEB14-00054 **Container Id** 10512685 **Analysis Id** 0000315035

Source Container

Is there a source container? Yes

Source Container ID	Location	IDC
10498822	destroyed @ 676- BXI/15	RF-760

IDC CODES

Current Container IDC Code: BN-508 **Recommended IDC Code:** -

Waste Material Items

Packaging Materials

Material Item	Quantity	Unit	Unit Wt	Item Wt(lbs)

Waste Items by Weight

Material Item	Quantity	Unit	Unit Wt	Item Wt(lbs)

Waste Items by Volume

Material Item	Quantity	Unit	Unit Wt	Item Wt(lbs)

Waste Parameters

Waste Parameter	Remaining Weight %	Actual Weight Lbs
Iron-based Metals/Alloys	0.000	0.000
Aluminum-based Metals/Alloys	0.000	0.000
Other metals	0.000	0.000
Other Inorganic Materials	0.000	0.000
Cellulosics	0.000	0.000
Rubber	0.000	0.000
Plastic (Waste Materials)	100.000	24.715
Inorganic matrix	0.000	0.000
Organic matrix	0.000	0.000
Soils/gravel	0.000	0.000
Steel (packaging materials)	0.000	26.000
Plastic (packaging materials)	0.000	0.000
Cellulosics Packaging	0.000	0.000

Esignature History

Esig Approval Id	User Id	E-signature Date	Comment
2698122	MREIDER	17-FEB-14 23:58:36	
2698123	JBAILEY	17-FEB-14 23:58:38	

VE Boxline and Repackaging Report

Batch Id VEB14-00054 **Container Id** 10512677 **Analysis Id** 0000315036

VE Date 18-FEB-14 00:10:45 **Analysis Status** Pass

Gen-IDC Code BN-508 AMWTP Newly Generated Debris **VE Weight** 57.33 lbs.

Closure Date 18-FEB-14 00:10:45 **Procedure Id** INST-FOI-17 **Net Weight** 31.33 lbs.

Container Type 55 **Revision** 27

Operator 1 MIKE REIDER **Waste Matrix** S5490 **Summary Category Group** S5000

Operator 2 JEFFREY K BAILEY **Equipment ID** VE BiD RPCK

General

Rigid Liner Present? No **Liner Type** NO LINER **Closure Method** No Bags

Liner Punctured? Yes **Layers Of Confinement** 0 **Fill Factor** 75 % **Liner Lid Present** No

Liquids

Liquids Present? No **Comment**

Liquid Between Liner and Drum 0 pints **Other Liquids** 0 pints

Containerized Liquid pints **Total Liquid Amount** 0 pints

Internal Container with Liquid 0 pints

Internal Container with Liquid No

Prohibited Liquids Present No

Containerized Liquid

Contents

Sharp Objects? No **Are Sharp Objects Protected?** Yes

	Value	*Comment*
Prohibited Compressed Gas Present?	No	
Explosives Present?	No	
Pyrophorics Present?	No	
Mercury Present?	No	
PCBs Present?	No	
PCB Mass (lbs)	0	
Wet Cell Batteries Present?	No	
Corrosives,Ignitables or Reactives Present?	No	
Beryllium Contaminates Present?	No	
Hazardous-Only Waste Present?	No	
Is Waste Incompatible with backfill, packaging materials, or shipping container materials?	No	
Sealed Containers Over 4L?	No	

IDC Verification

Is IDC correct? Yes **Recommended IDC** -

IDC Change Reason

Visual Exam Comment Remaining waste by weight percent is misc. plastics, plastic sheeting

VE Boxline and Repackaging Report

Batch Id VEB14-00054 **Container Id** 10512677 **Analysis Id** 0000315036

Source Container

Is there a source container? Yes

Source Container ID	Location	IDC
10498822	destroyed @ 676- BXI/15	RF-760

IDC CODES

Current Container IDC Code: BN-508 **Recommended IDC Code:** -

Waste Material Items

Packaging Materials

Material Item	Quantity	Unit	Unit Wt	Item Wt(lbs)

Waste Items by Weight

Material Item	Quantity	Unit	Unit Wt	Item Wt(lbs)

Waste Items by Volume

Material Item	Quantity	Unit	Unit Wt	Item Wt(lbs)

Waste Parameters

Waste Parameter	Remaining Weight %	Actual Weight Lbs
Iron-based Metals/Alloys	0.000	0.000
Aluminum-based Metals/Alloys	0.000	0.000
Other metals	0.000	0.000
Other Inorganic Materials	0.000	0.000
Cellulosics	0.000	0.000
Rubber	0.000	0.000
Plastic (Waste Materials)	100.000	31.330
Inorganic matrix	0.000	0.000
Organic matrix	0.000	0.000
Soils/gravel	0.000	0.000
Steel (packaging materials)	0.000	26.000
Plastic (packaging materials)	0.000	0.000
Cellulosics Packaging	0.000	0.000

Esignature History

Esig Approval Id	User Id	E-signature Date	Comment
2698124	MREIDER	18-FEB-14 00:10:45	
2698125	JBAILEY	18-FEB-14 00:10:47	

VE Boxline and Repackaging Report

Batch Id VEB14-00054 **Container Id** 10512688 **Analysis Id** 0000315037

VE Date 18-FEB-14 00:40:48 **Analysis Status** Pass

Gen-IDC Code BN-508 AMWTP Newly Generated Debris **VE Weight** 101.43 lbs.

Closure Date 18-FEB-14 00:40:48 **Procedure Id** INST-FOI-17 **Net Weight** 75.43 lbs.

Container Type 55 **Revision** 27

Operator 1 MIKE REIDER **Waste Matrix** S5490 **Summary Category Group** S5000

Operator 2 JEFFREY K BAILEY **Equipment ID** VE BiD RPCK

General

Rigid Liner Present? No **Liner Type** NO LINER **Closure Method** No Bags

Liner Punctured? Yes **Layers Of Confinement** 0 **Fill Factor** 75 % **Liner Lid Present** No

Liquids

Liquids Present? No **Comment**

Liquid Between Liner and Drum 0 pints **Other Liquids** 0 pints

Containerized Liquid pints **Total Liquid Amount** 0 pints

Internal Container with Liquid 0 pints

Internal Container with Liquid No

Prohibited Liquids Present No

Containerized Liquid

Contents

Sharp Objects? No **Are Sharp Objects Protected?** Yes

	Value	*Comment*
Prohibited Compressed Gas Present?	No	
Explosives Present?	No	
Pyrophorics Present?	No	
Mercury Present?	No	
PCBs Present?	No	
PCB Mass (lbs)	0	
Wet Cell Batteries Present?	No	
Corrosives,Ignitables or Reactives Present?	No	
Beryllium Contaminates Present?	No	
Hazardous-Only Waste Present?	No	
Is Waste Incompatible with backfill, packaging materials, or shipping container materials?	No	
Sealed Containers Over 4L?	No	

IDC Verification

Is IDC correct? Yes **Recommended IDC** -

IDC Change Reason

Visual Exam Comment Remaining waste by weight percent is misc. cellulosics consisting of wood

VE Boxline and Repackaging Report

Batch Id VEB14-00054 **Container Id** 10512688 **Analysis Id** 0000315037

Source Container

Is there a source container? Yes

Source Container ID	Location	IDC
10498822	destroyed @ 676- BXI/15	RF-760

IDC CODES

Current Container IDC Code: BN-508 **Recommended IDC Code:** -

Waste Material Items

Packaging Materials

Material Item	Quantity	Unit	Unit Wt	Item Wt(lbs)

Waste Items by Weight

Material Item	Quantity	Unit	Unit Wt	Item Wt(lbs)

Waste Items by Volume

Material Item	Quantity	Unit	Unit Wt	Item Wt(lbs)

Waste Parameters

Waste Parameter	Remaining Weight %	Actual Weight Lbs
Iron-based Metals/Alloys	0.000	0.000
Aluminum-based Metals/Alloys	0.000	0.000
Other metals	0.000	0.000
Other Inorganic Materials	0.000	0.000
Cellulosics	100.000	75.430
Rubber	0.000	0.000
Plastic (Waste Materials)	0.000	0.000
Inorganic matrix	0.000	0.000
Organic matrix	0.000	0.000
Soils/gravel	0.000	0.000
Steel (packaging materials)	0.000	26.000
Plastic (packaging materials)	0.000	0.000
Cellulosics Packaging	0.000	0.000

Esignature History

Esig Approval Id	User Id	E-signature Date	Comment
2698126	MREIDER	18-FEB-14 00:40:48	
2698127	JBAILEY	18-FEB-14 00:40:50	

Batch Id VEB14-00054 **Container Id** 10512678 **Analysis Id** 0000315038

VE Date 18-FEB-14 00:46:23 **Analysis Status** Pass

Gen-IDC Code BN-508 AMWTP Newly Generated Debris **VE Weight** 92.61 lbs.

Closure Date 18-FEB-14 00:46:23 **Procedure Id** INST-FOI-17 **Net Weight** 66.61 lbs.

Container Type 55 **Revision** 27

Operator 1 MIKE REIDER **Waste Matrix** S5490 **Summary Category Group** S5000

Operator 2 JEFFREY K BAILEY **Equipment ID** VE BiD RPCK

General

Rigid Liner Present? No **Liner Type** NO LINER **Closure Method** No Bags

Liner Punctured? Yes **Layers Of Confinement** 0 **Fill Factor** 80 % **Liner Lid Present** No

Liquids

Liquids Present? No **Comment**

Liquid Between Liner and Drum 0 pints **Other Liquids** 0 pints

Containerized Liquid pints **Total Liquid Amount** 0 pints

Internal Container with Liquid 0 pints

Internal Container with Liquid No

Prohibited Liquids Present No

Containerized Liquid

Contents

Sharp Objects? No **Are Sharp Objects Protected?** Yes

	Value	*Comment*
Prohibited Compressed Gas Present?	No	
Explosives Present?	No	
Pyrophorics Present?	No	
Mercury Present?	No	
PCBs Present?	No	
PCB Mass (lbs)	0	
Wet Cell Batteries Present?	No	
Corrosives,Ignitables or Reactives Present?	No	
Beryllium Contaminates Present?	No	
Hazardous-Only Waste Present?	No	
Is Waste Incompatible with backfill, packaging materials, or shipping container materials?	No	
Sealed Containers Over 4L?	No	

IDC Verification

Is IDC correct? Yes **Recommended IDC** -

IDC Change Reason

Visual Exam Comment Remaining waste by weight percent is misc. cellulosics consisting of wood

Batch Id VEB14-00054 **Container Id** 10512678 **Analysis Id** 0000315038

Source Container

Is there a source container? Yes

Source Container ID	Location	IDC
10498822	destroyed @ 676- BXI/15	RF-760

IDC CODES

Current Container IDC Code: BN-508 **Recommended IDC Code:** -

Waste Material Items

Packaging Materials

Material Item	Quantity	Unit	Unit Wt	Item Wt(lbs)

Waste Items by Weight

Material Item	Quantity	Unit	Unit Wt	Item Wt(lbs)

Waste Items by Volume

Material Item	Quantity	Unit	Unit Wt	Item Wt(lbs)

Waste Parameters

Waste Parameter	Remaining Weight %	Actual Weight Lbs
Iron-based Metals/Alloys	0.000	0.000
Aluminum-based Metals/Alloys	0.000	0.000
Other metals	0.000	0.000
Other Inorganic Materials	0.000	0.000
Cellulosics	100.000	66.610
Rubber	0.000	0.000
Plastic (Waste Materials)	0.000	0.000
Inorganic matrix	0.000	0.000
Organic matrix	0.000	0.000
Soils/gravel	0.000	0.000
Steel (packaging materials)	0.000	26.000
Plastic (packaging materials)	0.000	0.000
Cellulosics Packaging	0.000	0.000

Esignature History

Esig Approval Id	User Id	E-signature Date	Comment
2698133	MREIDER	18-FEB-14 00:46:23	
2698134	JBAILEY	18-FEB-14 00:46:25	

VE Boxline and Repackaging Report

Batch Id VEB14-00054 **Container Id** 10512676 **Analysis Id** 0000315039

VE Date 18-FEB-14 01:05:36 **Analysis Status** Pass

Gen-IDC Code BN-508 AMWTP Newly Generated Debris **VE Weight** 99.23 lbs.

Closure Date 18-FEB-14 01:05:36 **Procedure Id** INST-FOI-17 **Net Weight** 73.23 lbs.

Container Type 55 **Revision** 27

Operator 1 MIKE REIDER **Waste Matrix** S5490 **Summary Category Group** S5000

Operator 2 JEFFREY K BAILEY **Equipment ID** VE BiD RPCK

General

Rigid Liner Present? No **Liner Type** NO LINER **Closure Method** No Bags

Liner Punctured? Yes **Layers Of Confinement** 0 **Fill Factor** 75 % **Liner Lid Present** No

Liquids

Liquids Present? No **Comment**

Liquid Between Liner and Drum 0 pints **Other Liquids** 0 pints

Containerized Liquid pints **Total Liquid Amount** 0 pints

Internal Container with Liquid 0 pints

Internal Container with Liquid No

Prohibited Liquids Present No

Containerized Liquid

Contents

Sharp Objects? No **Are Sharp Objects Protected?** Yes

	Value	*Comment*
Prohibited Compressed Gas Present?	No	
Explosives Present?	No	
Pyrophorics Present?	No	
Mercury Present?	No	
PCBs Present?	No	
PCB Mass (lbs)	0	
Wet Cell Batteries Present?	No	
Corrosives,Ignitables or Reactives Present?	No	
Beryllium Contaminates Present?	No	
Hazardous-Only Waste Present?	No	
Is Waste Incompatible with backfill, packaging materials, or shipping container materials?	No	
Sealed Containers Over 4L?	No	

IDC Verification

Is IDC correct? Yes **Recommended IDC** -

IDC Change Reason

Visual Exam Comment Remaining waste by weight percent is misc. cellulosics consisting of wood

VE Boxline and Repackaging Report

Batch Id VEB14-00054 **Container Id** 10512676 **Analysis Id** 0000315039

Source Container

Is there a source container? Yes

Source Container ID	Location	IDC
10498822	destroyed @ 676- BXI/15	RF-760

IDC CODES

Current Container IDC Code: BN-508 **Recommended IDC Code:** -

Waste Material Items

Packaging Materials

Material Item	Quantity	Unit	Unit Wt	Item Wt(lbs)

Waste Items by Weight

Material Item	Quantity	Unit	Unit Wt	Item Wt(lbs)

Waste Items by Volume

Material Item	Quantity	Unit	Unit Wt	Item Wt(lbs)

Waste Parameters

Waste Parameter	Remaining Weight %	Actual Weight Lbs
Iron-based Metals/Alloys	0.000	0.000
Aluminum-based Metals/Alloys	0.000	0.000
Other metals	0.000	0.000
Other Inorganic Materials	0.000	0.000
Cellulosics	100.000	73.225
Rubber	0.000	0.000
Plastic (Waste Materials)	0.000	0.000
Inorganic matrix	0.000	0.000
Organic matrix	0.000	0.000
Soils/gravel	0.000	0.000
Steel (packaging materials)	0.000	26.000
Plastic (packaging materials)	0.000	0.000
Cellulosics Packaging	0.000	0.000

Esignature History

Esig Approval Id	User Id	E-signature Date	Comment
2698144	MREIDER	18-FEB-14 01:05:36	
2698145	JBAILEY	18-FEB-14 01:05:38	

VE Boxline and Repackaging Report

Batch Id VEB14-00054 **Container Id** 10512689 **Analysis Id** 0000315040

VE Date 18-FEB-14 01:12:58 **Analysis Status** Pass

Gen-IDC Code BN-508 AMWTP Newly Generated Debris **VE Weight** 99.23 lbs.

Closure Date 18-FEB-14 01:12:58 **Procedure Id** INST-FOI-17 **Net Weight** 73.23 lbs.

Container Type 55 **Revision** 27

Operator 1 MIKE REIDER **Waste Matrix** S5490 **Summary Category Group** S5000

Operator 2 JEFFREY K BAILEY **Equipment ID** VE BiD RPCK

General

Rigid Liner Present? No **Liner Type** NO LINER **Closure Method** No Bags

Liner Punctured? Yes **Layers Of Confinement** 0 **Fill Factor** 80 % **Liner Lid Present** No

Liquids

Liquids Present? No **Comment**

Liquid Between Liner and Drum 0 pints **Other Liquids** 0 pints

Containerized Liquid pints **Total Liquid Amount** 0 pints

Internal Container with Liquid 0 pints

Internal Container with Liquid No

Prohibited Liquids Present No

Containerized Liquid

Contents

Sharp Objects? No **Are Sharp Objects Protected?** Yes

	Value	*Comment*
Prohibited Compressed Gas Present?	No	
Explosives Present?	No	
Pyrophorics Present?	No	
Mercury Present?	No	
PCBs Present?	No	
PCB Mass (lbs)	0	
Wet Cell Batteries Present?	No	
Corrosives,Ignitables or Reactives Present?	No	
Beryllium Contaminates Present?	No	
Hazardous-Only Waste Present?	No	
Is Waste Incompatible with backfill, packaging materials, or shipping container materials?	No	
Sealed Containers Over 4L?	No	

IDC Verification

Is IDC correct? Yes **Recommended IDC** -

IDC Change Reason

Visual Exam Comment Remaining waste by weight percent is misc. cellulosics consisting of wood

Batch Id VEB14-00054 **Container Id** 10512689 **Analysis Id** 0000315040

Source Container

Is there a source container? Yes

Source Container ID	Location	IDC
10498822	destroyed @ 676- BXI/15	RF-760

IDC CODES

Current Container IDC Code: BN-508 **Recommended IDC Code:** -

Waste Material Items

Packaging Materials

Material Item	Quantity	Unit	Unit Wt	Item Wt(lbs)

Waste Items by Weight

Material Item	Quantity	Unit	Unit Wt	Item Wt(lbs)

Waste Items by Volume

Material Item	Quantity	Unit	Unit Wt	Item Wt(lbs)

Waste Parameters

Waste Parameter	Remaining Weight %	Actual Weight Lbs
Iron-based Metals/Alloys	0.000	0.000
Aluminum-based Metals/Alloys	0.000	0.000
Other metals	0.000	0.000
Other Inorganic Materials	0.000	0.000
Cellulosics	100.000	73.225
Rubber	0.000	0.000
Plastic (Waste Materials)	0.000	0.000
Inorganic matrix	0.000	0.000
Organic matrix	0.000	0.000
Soils/gravel	0.000	0.000
Steel (packaging materials)	0.000	26.000
Plastic (packaging materials)	0.000	0.000
Cellulosics Packaging	0.000	0.000

Esignature History

Esig Approval Id	User Id	E-signature Date	Comment
2698148	MREIDER	18-FEB-14 01:12:58	
2698149	JBAILEY	18-FEB-14 01:13:00	

Batch Id VEB14-00054 **Container Id** 10512675 **Analysis Id** 0000315041

VE Date 18-FEB-14 01:39:31 **Analysis Status** Pass

Gen-IDC Code BN-508 AMWTP Newly Generated Debris **VE Weight** 92.61 lbs.

Closure Date 18-FEB-14 01:39:31 **Procedure Id** INST-FOI-17 **Net Weight** 66.61 lbs.

Container Type 55 **Revision** 27

Operator 1 MIKE REIDER **Waste Matrix** S5490 **Summary Category Group** S5000

Operator 2 JEFFREY K BAILEY **Equipment ID** VE BiD RPCK

---General---

Rigid Liner Present? No **Liner Type** NO LINER **Closure Method** No Bags

Liner Punctured? Yes **Layers Of Confinement** 0 **Fill Factor** 75 % **Liner Lid Present** No

---Liquids---

Liquids Present? No **Comment**

Liquid Between Liner and Drum 0 pints **Other Liquids** 0 pints

Containerized Liquid pints **Total Liquid Amount** 0 pints

Internal Container with Liquid 0 pints

Internal Container with Liquid No

Prohibited Liquids Present No

Containerized Liquid

---Contents---

Sharp Objects? No **Are Sharp Objects Protected?** Yes

	Value	*Comment*
Prohibited Compressed Gas Present?	No	
Explosives Present?	No	
Pyrophorics Present?	No	
Mercury Present?	No	
PCBs Present?	No	
PCB Mass (lbs)	0	
Wet Cell Batteries Present?	No	
Corrosives,Ignitables or Reactives Present?	No	
Beryllium Contaminates Present?	No	
Hazardous-Only Waste Present?	No	
Is Waste Incompatible with backfill, packaging materials, or shipping container materials?	No	
Sealed Containers Over 4L?	No	

---IDC Verification---

Is IDC correct? Yes **Recommended IDC** -

IDC Change Reason

Visual Exam Comment Remaining waste by weight percent is misc. cellulosics consisting of wood

Batch Id VEB14-00054 **Container Id** 10512675 **Analysis Id** 0000315041

Source Container

Is there a source container? Yes

Source Container ID	Location	IDC
10498822	destroyed @ 676- BXI/15	RF-760

IDC CODES

Current Container IDC Code: BN-508 **Recommended IDC Code:** -

Waste Material Items

Packaging Materials

Material Item	Quantity	Unit	Unit Wt	Item Wt(lbs)

Waste Items by Weight

Material Item	Quantity	Unit	Unit Wt	Item Wt(lbs)

Waste Items by Volume

Material Item	Quantity	Unit	Unit Wt	Item Wt(lbs)

Waste Parameters

Waste Parameter	Remaining Weight %	Actual Weight Lbs
Iron-based Metals/Alloys	0.000	0.000
Aluminum-based Metals/Alloys	0.000	0.000
Other metals	0.000	0.000
Other Inorganic Materials	0.000	0.000
Cellulosics	100.000	66.610
Rubber	0.000	0.000
Plastic (Waste Materials)	0.000	0.000
Inorganic matrix	0.000	0.000
Organic matrix	0.000	0.000
Soils/gravel	0.000	0.000
Steel (packaging materials)	0.000	26.000
Plastic (packaging materials)	0.000	0.000
Cellulosics Packaging	0.000	0.000

Esignature History

Esig Approval Id	User Id	E-signature Date	Comment
2698150	MREIDER	18-FEB-14 01:39:31	
2698151	JBAILEY	18-FEB-14 01:39:34	

Batch Id VEB14-00054 **Container Id** 10512706 **Analysis Id** 0000315042

VE Date 18-FEB-14 02:08:01 **Analysis Status** Pass

Gen-IDC Code BN-508 AMWTP Newly Generated Debris **VE Weight** 160.97 lbs.

Closure Date 18-FEB-14 02:08:01 **Procedure Id** INST-FOI-17 **Net Weight** 134.97 lbs.

Container Type 55 **Revision** 27

Operator 1 MIKE REIDER **Waste Matrix** S5490 **Summary Category Group** S5000

Operator 2 JEFFREY K BAILEY **Equipment ID** VE BiD RPCK

---General---

Rigid Liner Present? No **Liner Type** NO LINER **Closure Method** No Bags

Liner Punctured? Yes **Layers Of Confinement** 0 **Fill Factor** 70 % **Liner Lid Present** No

---Liquids---

Liquids Present? No **Comment**

Liquid Between Liner and Drum 0 pints **Other Liquids** 0 pints

Containerized Liquid pints **Total Liquid Amount** 0 pints

Internal Container with Liquid 0 pints

Internal Container with Liquid No

Prohibited Liquids Present No

Containerized Liquid

---Contents---

Sharp Objects? Yes **Are Sharp Objects Protected?** No

	Value	*Comment*
Prohibited Compressed Gas Present?	No	
Explosives Present?	No	
Pyrophorics Present?	No	
Mercury Present?	No	
PCBs Present?	No	
PCB Mass (lbs)	0	
Wet Cell Batteries Present?	No	
Corrosives,Ignitables or Reactives Present?	No	
Beryllium Contaminates Present?	No	
Hazardous-Only Waste Present?	No	
Is Waste Incompatible with backfill, packaging materials, or shipping container materials?	No	
Sealed Containers Over 4L?	No	

---IDC Verification---

Is IDC correct? Yes **Recommended IDC** -

IDC Change Reason

Visual Exam Comment Remaining waste by weight percent is misc. iron based metal alloys consisting of scrap metal

Batch Id VEB14-00054 **Container Id** 10512706 **Analysis Id** 0000315042

Source Container

Is there a source container? Yes

Source Container ID	Location	IDC
10498822	destroyed @ 676- BXI/15	RF-760

IDC CODES

Current Container IDC Code: BN-508 **Recommended IDC Code:** -

Waste Material Items

Packaging Materials

Material Item	Quantity	Unit	Unit Wt	Item Wt(lbs)

Waste Items by Weight

Material Item	Quantity	Unit	Unit Wt	Item Wt(lbs)

Waste Items by Volume

Material Item	Quantity	Unit	Unit Wt	Item Wt(lbs)
Wood	2.000	PINTS	0.702	1.400
Plastic	1.000	PINTS	0.937	0.940

Waste Parameters

Waste Parameter	Remaining Weight %	Actual Weight Lbs
Iron-based Metals/Alloys	100.000	132.625
Aluminum-based Metals/Alloys	0.000	0.000
Other metals	0.000	0.000
Other Inorganic Materials	0.000	0.000
Cellulosics	0.000	1.400
Rubber	0.000	0.000
Plastic (Waste Materials)	0.000	0.940
Inorganic matrix	0.000	0.000
Organic matrix	0.000	0.000
Soils/gravel	0.000	0.000
Steel (packaging materials)	0.000	26.000
Plastic (packaging materials)	0.000	0.000
Cellulosics Packaging	0.000	0.000

Esignature History

Esig Approval Id	User Id	E-signature Date	Comment
2698155	MREIDER	18-FEB-14 02:08:02	
2698156	JBAILEY	18-FEB-14 02:08:04	

Batch Id VEB14-00054 **Container Id** 10512715 **Analysis Id** 0000315043

VE Date 18-FEB-14 02:38:11 **Analysis Status** Pass

Gen-IDC Code BN-508 AMWTP Newly Generated Debris **VE Weight** 147.74 **lbs.**

Closure Date 18-FEB-14 02:38:11 **Procedure Id** INST-FOI-17 **Net Weight** 121.74 **lbs.**

Container Type 55 **Revision** 27

Operator 1 MIKE REIDER **Waste Matrix** S5490 **Summary Category Group** S5000

Operator 2 JEFFREY K BAILEY **Equipment ID** VE BiD RPCK

General

Rigid Liner Present? No **Liner Type** NO LINER **Closure Method** No Bags

Liner Punctured? Yes **Layers Of Confinement** 0 **Fill Factor** 70 % **Liner Lid Present** No

Liquids

Liquids Present? No **Comment**

Liquid Between Liner and Drum 0 pints **Other Liquids** 0 pints

Containerized Liquid pints **Total Liquid Amount** 0 pints

Internal Container with Liquid 0 pints

Internal Container with Liquid No

Prohibited Liquids Present No

Containerized Liquid

Contents

Sharp Objects? Yes **Are Sharp Objects Protected?** No

	Value	*Comment*
Prohibited Compressed Gas Present?	No	
Explosives Present?	No	
Pyrophorics Present?	No	
Mercury Present?	No	
PCBs Present?	No	
PCB Mass (lbs)	0	
Wet Cell Batteries Present?	No	
Corrosives,Ignitables or Reactives Present?	No	
Beryllium Contaminates Present?	No	
Hazardous-Only Waste Present?	No	
Is Waste Incompatible with backfill, packaging materials, or shipping container materials?	No	
Sealed Containers Over 4L?	No	

IDC Verification

Is IDC correct? Yes **Recommended IDC** -

IDC Change Reason

Visual Exam Comment Remaining waste by weight percent is misc. iron based metal alloys consisting of scrap metal

VE Boxline and Repackaging Report

Batch Id VEB14-00054 **Container Id** 10512715 **Analysis Id** 0000315043

Source Container

Is there a source container? Yes

Source Container ID	Location	IDC
10498822	destroyed @ 676- BXI/15	RF-760

IDC CODES

Current Container IDC Code: BN-508 **Recommended IDC Code:** -

Waste Material Items

Packaging Materials

Material Item	Quantity	Unit	Unit Wt	Item Wt(lbs)

Waste Items by Weight

Material Item	Quantity	Unit	Unit Wt	Item Wt(lbs)

Waste Items by Volume

Material Item	Quantity	Unit	Unit Wt	Item Wt(lbs)
Plastic	2.000	PINTS	0.937	1.870

Waste Parameters

Waste Parameter	Remaining Weight %	Actual Weight Lbs
Iron-based Metals/Alloys	100.000	119.865
Aluminum-based Metals/Alloys	0.000	0.000
Other metals	0.000	0.000
Other Inorganic Materials	0.000	0.000
Cellulosics	0.000	0.000
Rubber	0.000	0.000
Plastic (Waste Materials)	0.000	1.870
Inorganic matrix	0.000	0.000
Organic matrix	0.000	0.000
Soils/gravel	0.000	0.000
Steel (packaging materials)	0.000	26.000
Plastic (packaging materials)	0.000	0.000
Cellulosics Packaging	0.000	0.000

Esignature History

Esig Approval Id	User Id	E-signature Date	Comment
2698157	MREIDER	18-FEB-14 02:38:11	
2698158	JBAILEY	18-FEB-14 02:38:13	

Batch Id VEB14-00054 **Container Id** 10512714 **Analysis Id** 0000315044

VE Date 18-FEB-14 02:45:13 **Analysis Status** Pass

Gen-IDC Code BN-508 AMWTP Newly Generated Debris **VE Weight** 72.77 lbs.

Closure Date 18-FEB-14 02:45:13 **Procedure Id** INST-FOI-17 **Net Weight** 46.77 lbs.

Container Type 55 **Revision** 27

Operator 1 MIKE REIDER **Waste Matrix** S5490 **Summary Category Group** S5000

Operator 2 JEFFREY K BAILEY **Equipment ID** VE BiD RPCK

---General---

Rigid Liner Present? No **Liner Type** NO LINER **Closure Method** No Bags

Liner Punctured? Yes **Layers Of Confinement** 0 **Fill Factor** 70 % **Liner Lid Present** No

---Liquids---

Liquids Present? No **Comment**

Liquid Between Liner and Drum 0 pints **Other Liquids** 0 pints

Containerized Liquid pints **Total Liquid Amount** 0 pints

Internal Container with Liquid 0 pints

Internal Container with Liquid No

Prohibited Liquids Present No

Containerized Liquid

---Contents---

Sharp Objects? No **Are Sharp Objects Protected?** Yes

	Value	*Comment*
Prohibited Compressed Gas Present?	No	
Explosives Present?	No	
Pyrophorics Present?	No	
Mercury Present?	No	
PCBs Present?	No	
PCB Mass (lbs)	0	
Wet Cell Batteries Present?	No	
Corrosives,Ignitables or Reactives Present?	No	
Beryllium Contaminates Present?	No	
Hazardous-Only Waste Present?	No	
Is Waste Incompatible with backfill, packaging materials, or shipping container materials?	No	
Sealed Containers Over 4L?	No	

---IDC Verification---

Is IDC correct? Yes **Recommended IDC** -

IDC Change Reason

Visual Exam Comment Remaining waste by weight percent is misc. plastics, plastic bags and sheeting

VE Boxline and Repackaging Report

Batch Id VEB14-00054 **Container Id** 10512714 **Analysis Id** 0000315044

Source Container

Is there a source container? Yes

Source Container ID	Location	IDC
10498822	destroyed @ 676- BXI/15	RF-760

IDC CODES

Current Container IDC Code: BN-508 **Recommended IDC Code:** -

Waste Material Items

Packaging Materials

Material Item	Quantity	Unit	Unit Wt	Item Wt(lbs)

Waste Items by Weight

Material Item	Quantity	Unit	Unit Wt	Item Wt(lbs)

Waste Items by Volume

Material Item	Quantity	Unit	Unit Wt	Item Wt(lbs)
Wood	3.000	PINTS	0.702	2.110
Cloth Material	1.000	PINTS	2.000	2.000

Waste Parameters

Waste Parameter	Remaining Weight %	Actual Weight Lbs
Iron-based Metals/Alloys	0.000	0.000
Aluminum-based Metals/Alloys	0.000	0.000
Other metals	0.000	0.000
Other Inorganic Materials	0.000	0.000
Cellulosics	0.000	4.110
Rubber	0.000	0.000
Plastic (Waste Materials)	100.000	42.655
Inorganic matrix	0.000	0.000
Organic matrix	0.000	0.000
Soils/gravel	0.000	0.000
Steel (packaging materials)	0.000	26.000
Plastic (packaging materials)	0.000	0.000
Cellulosics Packaging	0.000	0.000

Esignature History

Esig Approval Id	User Id	E-signature Date	Comment
2698159	MREIDER	18-FEB-14 02:45:14	
2698160	JBAILEY	18-FEB-14 02:45:16	

Batch Id VEB14-00054 **Container Id** 10512707 **Analysis Id** 0000315045

VE Date 18-FEB-14 03:07:50 **Analysis Status** Pass

Gen-IDC Code BN-508 AMWTP Newly Generated Debris **VE Weight** 160.97 lbs.

Closure Date 18-FEB-14 03:07:50 **Procedure Id** INST-FOI-17 **Net Weight** 134.97 lbs.

Container Type 55 **Revision** 27

Operator 1 MIKE REIDER **Waste Matrix** S5490 **Summary Category Group** S5000

Operator 2 JEFFREY K BAILEY **Equipment ID** VE BiD RPCK

General

Rigid Liner Present? No **Liner Type** NO LINER **Closure Method** No Bags

Liner Punctured? Yes **Layers Of Confinement** 0 **Fill Factor** 70 % **Liner Lid Present** No

Liquids

Liquids Present? No **Comment**

Liquid Between Liner and Drum 0 pints **Other Liquids** 0 pints

Containerized Liquid pints **Total Liquid Amount** 0 pints

Internal Container with Liquid 0 pints

Internal Container with Liquid No

Prohibited Liquids Present No

Containerized Liquid

Contents

Sharp Objects? Yes **Are Sharp Objects Protected?** No

	Value	*Comment*
Prohibited Compressed Gas Present?	No	
Explosives Present?	No	
Pyrophorics Present?	No	
Mercury Present?	No	
PCBs Present?	No	
PCB Mass (lbs)	0	
Wet Cell Batteries Present?	No	
Corrosives,Ignitables or Reactives Present?	No	
Beryllium Contaminates Present?	No	
Hazardous-Only Waste Present?	No	
Is Waste Incompatible with backfill, packaging materials, or shipping container materials?	No	
Sealed Containers Over 4L?	No	

IDC Verification

Is IDC correct? Yes **Recommended IDC** -

IDC Change Reason

Visual Exam Comment Remaining waste by weight percent is misc. iron based metal alloys consisting of scrap metal

Batch Id VEB14-00054 **Container Id** 10512707 **Analysis Id** 0000315045

Source Container

Is there a source container? Yes

Source Container ID	Location	IDC
10498822	destroyed @ 676- BXI/15	RF-760

IDC CODES

Current Container IDC Code: BN-508 **Recommended IDC Code:** -

Waste Material Items

Packaging Materials

Material Item	Quantity	Unit	Unit Wt	Item Wt(lbs)

Waste Items by Weight

Material Item	Quantity	Unit	Unit Wt	Item Wt(lbs)

Waste Items by Volume

Material Item	Quantity	Unit	Unit Wt	Item Wt(lbs)
Wood	1.000	PINTS	0.702	0.700
Plastic	4.000	PINTS	0.937	3.750

Waste Parameters

Waste Parameter	Remaining Weight %	Actual Weight Lbs
Iron-based Metals/Alloys	100.000	130.515
Aluminum-based Metals/Alloys	0.000	0.000
Other metals	0.000	0.000
Other Inorganic Materials	0.000	0.000
Cellulosics	0.000	0.700
Rubber	0.000	0.000
Plastic (Waste Materials)	0.000	3.750
Inorganic matrix	0.000	0.000
Organic matrix	0.000	0.000
Soils/gravel	0.000	0.000
Steel (packaging materials)	0.000	26.000
Plastic (packaging materials)	0.000	0.000
Cellulosics Packaging	0.000	0.000

Esignature History

Esig Approval Id	User Id	E-signature Date	Comment
2698161	MREIDER	18-FEB-14 03:07:51	
2698162	JBAILEY	18-FEB-14 03:07:53	

Batch Id VEB14-00054 **Container Id** 10512708 **Analysis Id** 0000315046

VE Date 18-FEB-14 03:25:55 **Analysis Status** Pass

Gen-IDC Code BN-508 AMWTP Newly Generated Debris **VE Weight** 189.63 **lbs.**

Closure Date 18-FEB-14 03:25:55 **Procedure Id** INST-FOI-17 **Net Weight** 163.63 **lbs.**

Container Type 55 **Revision** 27

Operator 1 MIKE REIDER **Waste Matrix** S5490 **Summary Category Group** S5000

Operator 2 JEFFREY K BAILEY **Equipment ID** VE BiD RPCK

General

Rigid Liner Present? No **Liner Type** NO LINER **Closure Method** No Bags

Liner Punctured? Yes **Layers Of Confinement** 0 **Fill Factor** 75 % **Liner Lid Present** No

Liquids

Liquids Present? No **Comment**

Liquid Between Liner and Drum 0 pints **Other Liquids** 0 pints

Containerized Liquid pints **Total Liquid Amount** 0 pints

Internal Container with Liquid 0 pints

Internal Container with Liquid No

Prohibited Liquids Present No

Containerized Liquid

Contents

Sharp Objects? Yes **Are Sharp Objects Protected?** No

	Value	*Comment*
Prohibited Compressed Gas Present?	No	
Explosives Present?	No	
Pyrophorics Present?	No	
Mercury Present?	No	
PCBs Present?	No	
PCB Mass (lbs)	0	
Wet Cell Batteries Present?	No	
Corrosives,Ignitables or Reactives Present?	No	
Beryllium Contaminates Present?	No	
Hazardous-Only Waste Present?	No	
Is Waste Incompatible with backfill, packaging materials, or shipping container materials?	No	
Sealed Containers Over 4L?	No	

IDC Verification

Is IDC correct? Yes **Recommended IDC** -

IDC Change Reason

Visual Exam Comment Remaining waste by weight percent is misc. iron based metal alloys consisting of scrap metal

VE Boxline and Repackaging Report

Batch Id VEB14-00054 **Container Id** 10512708 **Analysis Id** 0000315046

Source Container

Is there a source container? Yes

Source Container ID	Location	IDC
10498822	destroyed @ 676- BXI/15	RF-760

IDC CODES

Current Container IDC Code: BN-508 **Recommended IDC Code:** -

Waste Material Items

Packaging Materials

Material Item	Quantity	Unit	Unit Wt	Item Wt(lbs)

Waste Items by Weight

Material Item	Quantity	Unit	Unit Wt	Item Wt(lbs)

Waste Items by Volume

Material Item	Quantity	Unit	Unit Wt	Item Wt(lbs)
Paper	1.000	PINTS	0.969	0.970
Wood	4.000	PINTS	0.702	2.810
Plastic	2.000	PINTS	0.937	1.870

Waste Parameters

Waste Parameter	Remaining Weight %	Actual Weight Lbs
Iron-based Metals/Alloys	100.000	157.980
Aluminum-based Metals/Alloys	0.000	0.000
Other metals	0.000	0.000
Other Inorganic Materials	0.000	0.000
Cellulosics	0.000	3.780
Rubber	0.000	0.000
Plastic (Waste Materials)	0.000	1.870
Inorganic matrix	0.000	0.000
Organic matrix	0.000	0.000
Soils/gravel	0.000	0.000
Steel (packaging materials)	0.000	26.000
Plastic (packaging materials)	0.000	0.000
Cellulosics Packaging	0.000	0.000

Esignature History

Esig Approval Id	User Id	E-signature Date	Comment
2698163	MREIDER	18-FEB-14 03:25:55	
2698164	JBAILEY	18-FEB-14 03:25:58	

Batch Id VEB14-00054 **Container Id** 10512717 **Analysis Id** 0000315047

VE Date 18-FEB-14 04:34:33 **Analysis Status** Pass

Gen-IDC Code BN-508 AMWTP Newly Generated Debris **VE Weight** 130.10 lbs.

Closure Date 18-FEB-14 04:34:33 **Procedure Id** INST-FOI-17 **Net Weight** 104.10 lbs.

Container Type 55 **Revision** 27

Operator 1 MIKE REIDER **Waste Matrix** S5490 **Summary Category Group** S5000

Operator 2 JEFFREY K BAILEY **Equipment ID** VE BiD RPCK

General

Rigid Liner Present? No **Liner Type** NO LINER **Closure Method** No Bags

Liner Punctured? Yes **Layers Of Confinement** 0 **Fill Factor** 70 % **Liner Lid Present** No

Liquids

Liquids Present? No **Comment**

Liquid Between Liner and Drum 0 pints **Other Liquids** 0 pints

Containerized Liquid pints **Total Liquid Amount** 0 pints

Internal Container with Liquid 0 pints

Internal Container with Liquid No

Prohibited Liquids Present No

Containerized Liquid

Contents

Sharp Objects? Yes **Are Sharp Objects Protected?** No

	Value	*Comment*
Prohibited Compressed Gas Present?	No	
Explosives Present?	No	
Pyrophorics Present?	No	
Mercury Present?	No	
PCBs Present?	No	
PCB Mass (lbs)	0	
Wet Cell Batteries Present?	No	
Corrosives,Ignitables or Reactives Present?	No	
Beryllium Contaminates Present?	No	
Hazardous-Only Waste Present?	No	
Is Waste Incompatible with backfill, packaging materials, or shipping container materials?	No	
Sealed Containers Over 4L?	No	

IDC Verification

Is IDC correct? Yes **Recommended IDC** -

IDC Change Reason

Visual Exam Comment Remaining waste by weight percent is misc. iron based metal alloys consisting of scrap metal

Batch Id VEB14-00054 **Container Id** 10512717 **Analysis Id** 0000315047

Source Container

Is there a source container? Yes

Source Container ID	Location	IDC
10498822	destroyed @ 676- BXI/15	RF-760

IDC CODES

Current Container IDC Code: BN-508 **Recommended IDC Code:** -

Waste Material Items

Packaging Materials

Material Item	Quantity	Unit	Unit Wt	Item Wt(lbs)

Waste Items by Weight

Material Item	Quantity	Unit	Unit Wt	Item Wt(lbs)

Waste Items by Volume

Material Item	Quantity	Unit	Unit Wt	Item Wt(lbs)

Waste Parameters

Waste Parameter	Remaining Weight %	Actual Weight Lbs
Iron-based Metals/Alloys	100.000	104.095
Aluminum-based Metals/Alloys	0.000	0.000
Other metals	0.000	0.000
Other Inorganic Materials	0.000	0.000
Cellulosics	0.000	0.000
Rubber	0.000	0.000
Plastic (Waste Materials)	0.000	0.000
Inorganic matrix	0.000	0.000
Organic matrix	0.000	0.000
Soils/gravel	0.000	0.000
Steel (packaging materials)	0.000	26.000
Plastic (packaging materials)	0.000	0.000
Cellulosics Packaging	0.000	0.000

Esignature History

Esig Approval Id	User Id	E-signature Date	Comment
2698167	MREIDER	18-FEB-14 04:34:33	
2698168	JBAILEY	18-FEB-14 04:34:36	

Batch Id VEB14-00054 **Container Id** 10512716 **Analysis Id** 0000315048

VE Date 18-FEB-14 04:39:07 **Analysis Status** Pass

Gen-IDC Code BN-508 AMWTP Newly Generated Debris **VE Weight** 114.66 lbs.

Closure Date 18-FEB-14 04:39:07 **Procedure Id** INST-FOI-17 **Net Weight** 88.66 lbs.

Container Type 55 **Revision** 27

Operator 1 MIKE REIDER **Waste Matrix** S5490 **Summary Category Group** S5000

Operator 2 JEFFREY K BAILEY **Equipment ID** VE BiD RPCK

General

Rigid Liner Present? No **Liner Type** NO LINER **Closure Method** No Bags

Liner Punctured? Yes **Layers Of Confinement** 0 **Fill Factor** 70 % **Liner Lid Present** No

Liquids

Liquids Present? No **Comment**

Liquid Between Liner and Drum 0 pints **Other Liquids** 0 pints

Containerized Liquid pints **Total Liquid Amount** 0 pints

Internal Container with Liquid 0 pints

Internal Container with Liquid No

Prohibited Liquids Present No

Containerized Liquid

Contents

Sharp Objects? Yes **Are Sharp Objects Protected?** No

	Value	*Comment*
Prohibited Compressed Gas Present?	No	
Explosives Present?	No	
Pyrophorics Present?	No	
Mercury Present?	No	
PCBs Present?	No	
PCB Mass (lbs)	0	
Wet Cell Batteries Present?	No	
Corrosives,Ignitables or Reactives Present?	No	
Beryllium Contaminates Present?	No	
Hazardous-Only Waste Present?	No	
Is Waste Incompatible with backfill, packaging materials, or shipping container materials?	No	
Sealed Containers Over 4L?	No	

IDC Verification

Is IDC correct? Yes **Recommended IDC** -

IDC Change Reason

Visual Exam Comment Remaining waste by weight percent is misc. iron based metal alloys consisting of scrap metal

Batch Id VEB14-00054 **Container Id** 10512716 **Analysis Id** 0000315048

Source Container

Is there a source container? Yes

Source Container ID	Location	IDC
10498822	destroyed @ 676- BXI/15	RF-760

IDC CODES

Current Container IDC Code: BN-508 **Recommended IDC Code:** -

Waste Material Items

Packaging Materials

Material Item	Quantity	Unit	Unit Wt	Item Wt(lbs)

Waste Items by Weight

Material Item	Quantity	Unit	Unit Wt	Item Wt(lbs)

Waste Items by Volume

Material Item	Quantity	Unit	Unit Wt	Item Wt(lbs)
Cardboard	1.000	PINTS	0.833	0.830
Plastic	4.000	PINTS	0.937	3.750

Waste Parameters

Waste Parameter	Remaining Weight %	Actual Weight Lbs
Iron-based Metals/Alloys	100.000	84.080
Aluminum-based Metals/Alloys	0.000	0.000
Other metals	0.000	0.000
Other Inorganic Materials	0.000	0.000
Cellulosics	0.000	0.830
Rubber	0.000	0.000
Plastic (Waste Materials)	0.000	3.750
Inorganic matrix	0.000	0.000
Organic matrix	0.000	0.000
Soils/gravel	0.000	0.000
Steel (packaging materials)	0.000	26.000
Plastic (packaging materials)	0.000	0.000
Cellulosics Packaging	0.000	0.000

Esignature History

Esig Approval Id	User Id	E-signature Date	Comment
2698169	MREIDER	18-FEB-14 04:39:07	
2698170	JBAILEY	18-FEB-14 04:39:09	

Batch Id VEB14-00054 **Container Id** 10512710 **Analysis Id** 0000315049

VE Date 18-FEB-14 05:06:31 **Analysis Status** Pass

Gen-IDC Code BN-508 AMWTP Newly Generated Debris **VE Weight** 163.17 lbs.

Closure Date 18-FEB-14 05:06:31 **Procedure Id** INST-FOI-17 **Net Weight** 137.17 lbs.

Container Type 55 **Revision** 27

Operator 1 MIKE REIDER **Waste Matrix** S5490 **Summary Category Group** S5000

Operator 2 JEFFREY K BAILEY **Equipment ID** VE BiD RPCK

General

Rigid Liner Present? No **Liner Type** NO LINER **Closure Method** No Bags

Liner Punctured? Yes **Layers Of Confinement** 0 **Fill Factor** 75 % **Liner Lid Present** No

Liquids

Liquids Present? No **Comment**

Liquid Between Liner and Drum 0 pints **Other Liquids** 0 pints

Containerized Liquid pints **Total Liquid Amount** 0 pints

Internal Container with Liquid 0 pints

Internal Container with Liquid No

Prohibited Liquids Present No

Containerized Liquid

Contents

Sharp Objects? Yes **Are Sharp Objects Protected?** No

	Value	*Comment*
Prohibited Compressed Gas Present?	No	
Explosives Present?	No	
Pyrophorics Present?	No	
Mercury Present?	No	
PCBs Present?	No	
PCB Mass (lbs)	0	
Wet Cell Batteries Present?	No	
Corrosives,Ignitables or Reactives Present?	No	
Beryllium Contaminates Present?	No	
Hazardous-Only Waste Present?	No	
Is Waste Incompatible with backfill, packaging materials, or shipping container materials?	No	
Sealed Containers Over 4L?	No	

IDC Verification

Is IDC correct? Yes **Recommended IDC** -

IDC Change Reason

Visual Exam Comment Remaining waste by weight percent is misc. iron based metal alloys consisting of scrap metal

Batch Id VEB14-00054 **Container Id** 10512710 **Analysis Id** 0000315049

Source Container

Is there a source container? Yes

Source Container ID	Location	IDC
10498822	destroyed @ 676- BXI/15	RF-760

IDC CODES

Current Container IDC Code: BN-508 **Recommended IDC Code:** -

Waste Material Items

Packaging Materials

Material Item	Quantity	Unit	Unit Wt	Item Wt(lbs)

Waste Items by Weight

Material Item	Quantity	Unit	Unit Wt	Item Wt(lbs)

Waste Items by Volume

Material Item	Quantity	Unit	Unit Wt	Item Wt(lbs)
Wood	4.000	PINTS	0.702	2.810
Plastic	3.000	PINTS	0.937	2.810
Cloth Material	1.000	PINTS	2.000	2.000

Waste Parameters

Waste Parameter	Remaining Weight %	Actual Weight Lbs
Iron-based Metals/Alloys	100.000	129.550
Aluminum-based Metals/Alloys	0.000	0.000
Other metals	0.000	0.000
Other Inorganic Materials	0.000	0.000
Cellulosics	0.000	4.810
Rubber	0.000	0.000
Plastic (Waste Materials)	0.000	2.810
Inorganic matrix	0.000	0.000
Organic matrix	0.000	0.000
Soils/gravel	0.000	0.000
Steel (packaging materials)	0.000	26.000
Plastic (packaging materials)	0.000	0.000
Cellulosics Packaging	0.000	0.000

Esignature History

Esig Approval Id	User Id	E-signature Date	Comment
2698174	MREIDER	18-FEB-14 05:06:31	
2698175	JBAILEY	18-FEB-14 05:06:33	

*****End of VE Boxline Report*****

AMWTP
Advanced Mixed Waste Treatment Project

AMWTP

Checklist Report

Date: 26-Sep-2014

Time: 10:17

Batch Id VEB14-00054 **Open Date** 17-FEB-14 **Close Date** 18-FEB-14

Reviewer L.J. WALKER **Approval Level** Independent Technical Reviewer

Approval Date 19-FEB-14 **Review Iteration** 1

Question Text	Answer	Requirement	Comment
1. Is the QA documentation for the Batch Data Reports complete and includes data reports and QC results? o VE Batch Coversheet o Table of Contents (manual review only) o VE Analysis Reports o Analytical Balance Calibration Check Sheet (Form-1215), if applicable (manual review only) o ITR Checklist (Form-1415, manual review only) o Batch Data Report Supplemental Comment Form (Form-1491, manual review only) o Associated NCRs (referenced in WTS) o Audio/Video Recording References, if applicable	Yes		
2. Are there 20 containers or less in the batch?	Yes		
3. Was each VE Operator qualified at the time of the VE event?	Yes		
4. Was a VE data form completed for each container in the batch?	Yes		
Was the data generated in a technically correct manner using the correct revision of INST-OI-34, Non-facility Visual Examination or INST-FOI-17, Facility Visual Examination Operations, as applicable.	Yes		
6. Was the correct revision of the procedure documented on each analysis report?	Yes		
7. Was the E-signature History review performed?	Yes		
8. Was guidance from VEE documented, as applicable?	N/A		
9. Does every drum reported in the batch have a valid audio/video recording (as applicable)?	N/A		
10. Does the physical form match the waste stream description, waste matrix code and IDC?	Yes		
11. Did the VE event result in an IDC/Waste Matrix Code change? If so, was an NCR initiated?	No		
12. Were the waste material parameters documented correctly?	Yes		
13. Was the presence or absence of prohibited items properly identified? o If prohibited items were identified, were NCRs initiated?	Yes		
14. Has the description of rigid liners and layers of confinement been properly documented?	Yes		
15. Was the drum age criteria (DAC) entered correctly and completely? o Closure Method(s) o Liner Puncture Status o Layers of Confinement o Closure Date o Packaging Configuration o Type and number of filters, as applicable o Liner hole presence and diameter, as applicable	Yes		
16. Have filters been installed or removed from drum as recorded in WTS, as applicable?	N/A		
17. Hand calculations and unit conversions are correct? o Does the packaging weight plus the net weight equal the gross weight of the drum in the estimated waste material parameters, and for the unit conversions that are entered by volume or weight?	Yes		
18. Were all units and significant figures used correct for all reported volumes/weights?	Yes		

Batch Id VEB14-00054 **Open Date** 17-FEB-14 **Close Date** 18-FEB-14

Reviewer L.J. WALKER **Approval Level** Independent Technical Reviewer

Approval Date 19-FEB-14 **Review Iteration** 1

Question Text	Answer	Requirement	Comment
19. Has the data been reviewed for transcription errors as appropriate?	Yes		
20. Were the Visual Examination QAOs met? o Precision o Accuracy o Completeness o Comparability	Yes		
21. Is each data form signed by qualified VE Operators, as applicable per the appropriate procedure being used?	Yes		
22. Was the audio/video check satisfactory, as applicable?	N/A		
23. Was the scale or balance check weight event satisfactory, as applicable?	N/A		
24. Are the QC weight checks within the tolerance of the scale or balance, as applicable?	N/A		
25. Were any NCRs generated for drums containing prohibited items or any nonconforming conditions that failed to meet DQOs or QAOs? o Include the NCRs as appropriate, in the Batch Data Report.	No		
26. Were the rework requirements clearly identified in WTS or on the BDR?	N/A		

Batch Id VEB14-00054 **Open Date** 17-FEB-14 **Close Date** 18-FEB-14

Reviewer NICK STYHL **Approval Level** SPM Data Validation
Approval Date 20-FEB-14 **Review Iteration** 1

Question Text	Answer	Requirement	Comment
(1) Has the batch received a Data Generation Level Independent Technical Review?	Yes	MP-TRUW-8.2, C3-10b(1)	
(2) Are the batch data review checklists complete?	Yes	MP-TRUW-8.2, C3-10b(1)	
(3) When identified, were PCBs, mercury, lead, or other hazardous contaminants consistent with the waste stream AK Summary Report(s) and/or AK documentation?	N/A	MP-TRUW-8.2, C4-3	None identified.
(4) Are any ignitable, corrosive, or reactive wastes identified?	No	MP-TRUW-8.2, C4-3	
(5) Are the packaging configurations identified on the VE consistent with the waste stream AK Summary Report(s) and/or AK documentation?	Yes	MP-TRUW-8.2, C4-3	
(6) Do the drums in this batch contain typical waste items consistent with waste stream AK Summary Report(s) and/or AK documentation?	Yes	MP-TRUW-8.2, C4-3	
(7) Are the Waste Matrix Codes and physical form descriptions consistent with AK?	Yes	MP-TRUW-8.2, C4-3	
(8) Have all AK discrepancies been resolved and have all AK Resolution checklists been approved? Reference all waste stream AK documentation used in review of this data package.	N/A	MP-TRUW-8.2, C4-3	No discrepancies. MP-TRUW-05, MP-TRUW-06
(9) Does the batch report identify the correct implementing procedure number and revision number used for this testing method?	Yes	MP-TRUW-8.2, C3-4 and Table C3-11	
(10) Have the Waste Matrix Code (WMC) and IDC for all drums in the batch remained the same as originally assigned by the historical designation? NOTE: If not, note the drum number in the comment field and notify the Acceptable Knowledge Expert (AKE) if an NCR does not exist for the WMC and IDC change.	Yes	MP-TRUW-8.2, C-3c and C1-4	The IDC/WMC and summary category for newly generated waste are assigned by the operators during the VE event.
(11) Does the physical form of the waste match the WMC, waste stream description, and identify the absence of prohibited items?	Yes	MP-TRUW-8.2, C-3c and C1-4	
(12) If observable liquids exist in the drum, is an estimate of quantity given?	N/A	MP-TRUW-8.2, C-3c and C1-4	No residual liquids exist.
(13) Precision: Have all discrepancies been reconciled between the operator and the ITR with regard to identification of WMC, liquids in excess of TSDF-WAC limits, and compressed gases?	Yes	MP-TRUW-8.2 C3-4b	
(14) Accuracy: Have all operators passed a comprehensive examination and demonstrated satisfactory performance in the presence of the VE expert during initial and subsequent qualifications?	Yes	MP-TRUW-8.2 C3-4b	
(15) Completeness: Has a validated VE data form been obtained for 100% of the waste containers subject to VE?	Yes	MP-TRUW-8.2 C3-4b	
(16) Comparability: Has the comparability of VE data from different operators been enhanced by use of standardized VE procedures and operator qualifications?	Yes	MP-TRUW-8.2 C3-4b	
(17) Does the data for all containers within this batch meet the review, validation, and verification requirements? · Are proper units (e.g. Liters or pounds) and significant figure used? · Is the BDR complete (all pages identified in the BDR and numbered according)? - VE Batch Coversheet - Table of Contents (manual review only) - VE Analysis Reports - Analytical Balance Calibration Checklist (if applicable) - ITR Checklist (Form-1415)	Yes	MP-TRUW-8.2, C3-10b and Table C3-11	

Batch Id VEB14-00054 **Open Date** 17-FEB-14 **Close Date** 18-FEB-14

Reviewer NICK STYHL **Approval Level** SPM Data Validation

Approval Date 20-FEB-14 **Review Iteration** 1

Question Text	Answer	Requirement	Comment
- Associated NCRs - Audio/Video Recordings (if applicable)			
(18) Do the drum reports contain the (a) Batch Data Report number and date, (b) waste container number (c)WMC, (d) implementing procedure and revision, (e) audio/video recording reference, (f) audio and video QC checks were performed and satisfactory, (g) verification that the physical form matches the waste stream description and WMC, (h) absence of prohibited items, (i) gross container weight, (j) waste material parameter weights, and (k) signature and date of examination (signatures of both operators when applicable)?	Yes	MP-TRUW-8.2, C1-4 and Table C3-11	Audio/Video recording and QC checks reference not applicable.
(19) Is the description of container contents detailed enough to provide verification of estimated weights for the waste matrix parameters identified?	Yes	MP-TRUW-8.2, C1-4 and Table C3-11	
(20) Is there a valid second weight check for every 10 items?	N/A	MP-TRUW-8.2, C1-4	Scales were not used during this VE event.
(21) Verification of two operator signatures when doing VE?	Yes	MP-TRUW-8.2, C-3d(1) and Table C3-11	
(22) Are there 20 or fewer containers in the batch?	Yes	MP-TRUW-8.2, C1-3 and C3-10	
(23) Review all NCRs (open and closed). Can the batch be approved?	Yes	MP-TRUW-8.2, C3-13	
(24) All data associated with this BDR is acceptable for signature release?	Yes	MP-TRUW-8.2, C3-10b and C3-10b(1)	

Batch Id VEB14-00054 **Open Date** 17-FEB-14 **Close Date** 18-FEB-14

Esignature History

Esig Approval ID	User ID	Esig Date	Approval Level	Comments
2700874	NSTYHL	20-FEB-14	SPM	Approve batch.
2700215	LJWALKER	19-FEB-14	ITR	Review Complete

AMWTP
Advanced Mixed Waste Treatment Project

AMWTP

Non-Conformance Report

Date: 26-Sep-2014

Time: 10:22

*****Batch NCR(s)*****

Batch Type	VEB	Batch ID	VEB14-00054		
Trackwise Number		**Status**		**Opened Date**	**Closed Date**

*****Container NCR(s)*****

Container ID *or related Batch ID*	Trackwise Number	Status	Opened Date	Closed Date

*****End of Non-Conformance Report*****

AMWTP
Advanced Mixed Waste Treatment Project

AMWTP

Date: 26-Sep-2014

Time: 10:22

Scale Check Event Report

Batch Id	VEB14-00054	**Container Id**	10512687
Batch Id	VEB14-00054	**Container Id**	10512677
Batch Id	VEB14-00054	**Container Id**	10512685
Batch Id	VEB14-00054	**Container Id**	10512708
Batch Id	VEB14-00054	**Container Id**	10512710
Batch Id	VEB14-00054	**Container Id**	10512689
Batch Id	VEB14-00054	**Container Id**	10512707
Batch Id	VEB14-00054	**Container Id**	10512680
Batch Id	VEB14-00054	**Container Id**	10512714
Batch Id	VEB14-00054	**Container Id**	10512716
Batch Id	VEB14-00054	**Container Id**	10512684
Batch Id	VEB14-00054	**Container Id**	10512686
Batch Id	VEB14-00054	**Container Id**	10512678
Batch Id	VEB14-00054	**Container Id**	10512679
Batch Id	VEB14-00054	**Container Id**	10512688
Batch Id	VEB14-00054	**Container Id**	10512715
Batch Id	VEB14-00054	**Container Id**	10512676
Batch Id	VEB14-00054	**Container Id**	10512675
Batch Id	VEB14-00054	**Container Id**	10512706
Batch Id	VEB14-00054	**Container Id**	10512717

DIVIDER

PAGE

AMWTP
Advanced Mixed Waste Treatment Project

AMWTP

Batch Report Coversheet

Date: 26-Sep-2014

Time: 10:47

Batch Type VE Boxline
Batch Report No. VEB14-00079
Batch Id VEB14-00079
Open Date 03-MAR-14 04:02:38
Close Date 03-MAR-14 21:44:46
Batch Status AP
Test Facility Idaho AMWTP
Equipment Id VE BiD RPCK VE Box Repackaging Into Drums

Container Id	IDC	Analysis Id	Date Examined	QC Type	Analysis Status	Operator
10514215	BN-508	0000315872	03-MAR-14 04:02:38	Original	P	JEFFREY K BAILEY
10514201	BN-508	0000315873	03-MAR-14 07:32:29	Original	P	GUY MATLOCK
10514213	BN-508	0000315874	03-MAR-14 07:37:59	Original	P	GUY MATLOCK
10514184	BN-508	0000315875	03-MAR-14 07:51:15	Original	P	ANTHONY SIGMON
10514131	BN-508	0000315876	03-MAR-14 08:19:08	Original	P	ANTHONY SIGMON
10514185	BN-508	0000315877	03-MAR-14 08:44:51	Original	P	ANTHONY SIGMON
10514202	BN-508	0000315878	03-MAR-14 08:52:51	Original	P	GUY MATLOCK
10514212	BN-508	0000315879	03-MAR-14 09:03:05	Original	P	GUY MATLOCK
10514214	BN-508	0000315880	03-MAR-14 09:32:10	Original	P	ANTHONY SIGMON
10514204	BN-508	0000315881	03-MAR-14 09:41:31	Original	P	GUY MATLOCK
10514203	BN-508	0000315882	03-MAR-14 09:49:44	Original	P	ANTHONY SIGMON
10514205	BN-508	0000315883	03-MAR-14 09:49:22	Original	P	GUY MATLOCK
10514211	BN-508	0000315888	03-MAR-14 10:09:57	Original	P	ANTHONY SIGMON
10514210	BN-508	0000315889	03-MAR-14 10:35:25	Original	P	GUY MATLOCK
10514209	BN-508	0000315903	03-MAR-14 19:48:29	Original	P	MIKE REIDER
10514207	BN-508	0000315904	03-MAR-14 20:21:03	Original	P	MIKE REIDER
10514231	BN-508	0000315905	03-MAR-14 20:26:34	Original	P	MIKE REIDER
10514222	BN-508	0000315907	03-MAR-14 21:04:17	Original	P	MIKE REIDER
10514223	BN-508	0000315908	03-MAR-14 21:13:29	Original	P	MIKE REIDER
10514221	BN-508	0000315912	03-MAR-14 21:43:46	Original	P	MIKE REIDER

INFORMATION ONLY

Batch Report Coversheet

**********Batch Comments**********

Written By	Date	Comment
JSIMONSON	05-MAR-14 09:52:25	This batch was validated electronically only per MP-TRUW-8.8.
JSIMONSON	05-MAR-14 09:58:01	Level 1Validation complete.
JSIMONSON	05-MAR-14 10:00:41	Promoted to SPM.
RWALKER	06-MAR-14 06:11:28	SPM validation complete. Promote batch.

AMWTP

Advanced Mixed Waste Treatment Project

AMWTP

Batch Report Coversheet

Date: 26-Sep-2014

Time: 10:47

**********************Batch E-Signature History***********************

Approval ID	User ID	Signature Date	Comment
2710787	JSIMONSON	05-MAR-2014 10:00:41	Promoted to SPM.
2711304	RWALKER	06-MAR-2014 06:11:28	SPM validation complete. Promote batch.

******* End of Batch Report Coversheet Report *******

AMWTP
Advanced Mixed Waste Treatment Project

AMWTP

VE Boxline and Repackaging Report

Date: 26-Sep-2014

Time: 10:49

Batch Id VEB14-00079 **Container Id** 10514215 **Analysis Id** 0000315872

VE Date 03-MAR-14 04:02:38 **Analysis Status** Pass

Gen-IDC Code BN-508 AMWTP Newly Generated Debris **VE Weight** 83.79 lbs.

Closure Date 03-MAR-14 04:02:38 **Procedure Id** INST-FOI-17 **Net Weight** 57.79 lbs.

Container Type 55 **Revision** 27

Operator 1 JEFFREY K BAILEY **Waste Matrix** S5490 **Summary Category Group** S5000

Operator 2 MIKE REIDER **Equipment ID** VE BiD RPCK

General

Rigid Liner Present? No **Liner Type** NO LINER **Closure Method** No Bags

Liner Punctured? Yes **Layers Of Confinement** 0 **Fill Factor** 80 % **Liner Lid Present** No

Liquids

Liquids Present? No **Comment**

Liquid Between Liner and Drum 0 pints **Other Liquids** 0 pints

Containerized Liquid pints **Total Liquid Amount** 0 pints

Internal Container with Liquid 0 pints

Internal Container with Liquid No

Prohibited Liquids Present No

Containerized Liquid

Contents

Sharp Objects? No **Are Sharp Objects Protected?** Yes

	Value	*Comment*
Prohibited Compressed Gas Present?	No	
Explosives Present?	No	
Pyrophorics Present?	No	
Mercury Present?	No	
PCBs Present?	No	
PCB Mass (lbs)	0	
Wet Cell Batteries Present?	No	
Corrosives,Ignitables or Reactives Present?	No	
Beryllium Contaminates Present?	No	
Hazardous-Only Waste Present?	No	
Is Waste Incompatible with backfill, packaging materials, or shipping container materials?	No	
Sealed Containers Over 4L?	No	

IDC Verification

Is IDC correct? Yes **Recommended IDC** -

IDC Change Reason

Visual Exam Comment The remaining waste by weight percent is cellulosics consisting of wood.

VE Boxline and Repackaging Report

Batch Id VEB14-00079 **Container Id** 10514215 **Analysis Id** 0000315872

Source Container

Is there a source container? Yes

Source Container ID	Location	IDC
10033558	destroyed @ 676- BXI/9	MD-824

IDC CODES

Current Container IDC Code: BN-508 **Recommended IDC Code:** -

Waste Material Items

Packaging Materials

Material Item	Quantity	Unit	Unit Wt	Item Wt(lbs)

Waste Items by Weight

Material Item	Quantity	Unit	Unit Wt	Item Wt(lbs)

Waste Items by Volume

Material Item	Quantity	Unit	Unit Wt	Item Wt(lbs)

Waste Parameters

Waste Parameter	Remaining Weight %	Actual Weight Lbs
Iron-based Metals/Alloys	0.000	0.000
Aluminum-based Metals/Alloys	0.000	0.000
Other metals	0.000	0.000
Other Inorganic Materials	0.000	0.000
Cellulosics	100.000	57.790
Rubber	0.000	0.000
Plastic (Waste Materials)	0.000	0.000
Inorganic matrix	0.000	0.000
Organic matrix	0.000	0.000
Soils/gravel	0.000	0.000
Steel (packaging materials)	0.000	26.000
Plastic (packaging materials)	0.000	0.000
Cellulosics Packaging	0.000	0.000

Esignature History

Esig Approval Id	User Id	E-signature Date	Comment
2708128	JBAILEY	03-MAR-14 04:02:38	
2708129	MREIDER	03-MAR-14 04:02:40	

Batch Id VEB14-00079 **Container Id** 10514201 **Analysis Id** 0000315873

VE Date 03-MAR-14 07:32:29 **Analysis Status** Pass

Gen-IDC Code BN-508 AMWTP Newly Generated Debris **VE Weight** 90.41 **lbs.**

Closure Date 03-MAR-14 07:32:29 **Procedure Id** INST-FOI-17 **Net Weight** 64.41 **lbs.**

Container Type 55 **Revision** 27

Operator 1 GUY MATLOCK **Waste Matrix** S5490 **Summary Category Group** S5000

Operator 2 SHIRLEY PEREZ **Equipment ID** VE BiD RPCK

General

Rigid Liner Present? No **Liner Type** NO LINER **Closure Method** No Bags

Liner Punctured? Yes **Layers Of Confinement** 0 **Fill Factor** 65 % **Liner Lid Present** No

Liquids

Liquids Present? No **Comment**

Liquid Between Liner and Drum 0 pints **Other Liquids** 0 pints

Containerized Liquid pints **Total Liquid Amount** 0 pints

Internal Container with Liquid 0 pints

Internal Container with Liquid No

Prohibited Liquids Present No

Containerized Liquid

Contents

Sharp Objects? No **Are Sharp Objects Protected?** Yes

	Value	*Comment*
Prohibited Compressed Gas Present?	No	
Explosives Present?	No	
Pyrophorics Present?	No	
Mercury Present?	No	
PCBs Present?	No	
PCB Mass (lbs)	0	
Wet Cell Batteries Present?	No	
Corrosives,Ignitables or Reactives Present?	No	
Beryllium Contaminates Present?	No	
Hazardous-Only Waste Present?	No	
Is Waste Incompatible with backfill, packaging materials, or shipping container materials?	No	
Sealed Containers Over 4L?	No	

IDC Verification

Is IDC correct? Yes **Recommended IDC** -

IDC Change Reason

Visual Exam Comment The remaining waste by weight percent is Cellulosics consisting of wood debris and cardboard.

Batch Id VEB14-00079 **Container Id** 10514201 **Analysis Id** 0000315873

---Source Container---

Is there a source container? Yes

Source Container ID	Location	IDC
10033558	destroyed @ 676- BXI/9	MD-824

---IDC CODES---

Current Container IDC Code: BN-508 **Recommended IDC Code:** -

--- Waste Material Items---

---Packaging Materials---

Material Item	Quantity	Unit	Unit Wt	Item Wt(lbs)

---Waste Items by Weight---

Material Item	Quantity	Unit	Unit Wt	Item Wt(lbs)

---Waste Items by Volume---

Material Item	Quantity	Unit	Unit Wt	Item Wt(lbs)

---Waste Parameters---

Waste Parameter	Remaining Weight %	Actual Weight Lbs
Iron-based Metals/Alloys	0.000	0.000
Aluminum-based Metals/Alloys	0.000	0.000
Other metals	0.000	0.000
Other Inorganic Materials	0.000	0.000
Cellulosics	100.000	64.405
Rubber	0.000	0.000
Plastic (Waste Materials)	0.000	0.000
Inorganic matrix	0.000	0.000
Organic matrix	0.000	0.000
Soils/gravel	0.000	0.000
Steel (packaging materials)	0.000	26.000
Plastic (packaging materials)	0.000	0.000
Cellulosics Packaging	0.000	0.000

---Esignature History---

Esig Approval Id	User Id	E-signature Date	Comment
2708710	GMATLOCK	03-MAR-14 07:32:29	
2708711	SPEREZ	03-MAR-14 07:32:31	

VE Boxline and Repackaging Report

Batch Id VEB14-00079 **Container Id** 10514213 **Analysis Id** 0000315874

VE Date 03-MAR-14 07:37:59 **Analysis Status** Pass

Gen-IDC Code BN-508 AMWTP Newly Generated Debris **VE Weight** 92.61 **lbs.**

Closure Date 03-MAR-14 07:37:59 **Procedure Id** INST-FOI-17 **Net Weight** 66.61 **lbs.**

Container Type 55 **Revision** 27

Operator 1 GUY MATLOCK **Waste Matrix** S5490 **Summary Category Group** S5000

Operator 2 SHIRLEY PEREZ **Equipment ID** VE BiD RPCK

General

Rigid Liner Present? No **Liner Type** NO LINER **Closure Method** No Bags

Liner Punctured? Yes **Layers Of Confinement** 0 **Fill Factor** 60 % **Liner Lid Present** No

Liquids

Liquids Present? No **Comment**

Liquid Between Liner and Drum 0 pints **Other Liquids** 0 pints

Containerized Liquid pints **Total Liquid Amount** 0 pints

Internal Container with Liquid 0 pints

Internal Container with Liquid No

Prohibited Liquids Present No

Containerized Liquid

Contents

Sharp Objects? No **Are Sharp Objects Protected?** Yes

	Value	*Comment*
Prohibited Compressed Gas Present?	No	
Explosives Present?	No	
Pyrophorics Present?	No	
Mercury Present?	No	
PCBs Present?	No	
PCB Mass (lbs)	0	
Wet Cell Batteries Present?	No	
Corrosives,Ignitables or Reactives Present?	No	
Beryllium Contaminates Present?	No	
Hazardous-Only Waste Present?	No	
Is Waste Incompatible with backfill, packaging materials, or shipping container materials?	No	
Sealed Containers Over 4L?	No	

IDC Verification

Is IDC correct? Yes **Recommended IDC** -

IDC Change Reason

Visual Exam Comment The remaining waste by weight percent is Cellulosics consisting of wood debris and cardboard.

Batch Id VEB14-00079 **Container Id** 10514213 **Analysis Id** 0000315874

Source Container

Is there a source container? Yes

Source Container ID	Location	IDC
10033558	destroyed @ 676- BXI/9	MD-824

IDC CODES

Current Container IDC Code: BN-508 **Recommended IDC Code:** -

Waste Material Items

Packaging Materials

Material Item	Quantity	Unit	Unit Wt	Item Wt(lbs)

Waste Items by Weight

Material Item	Quantity	Unit	Unit Wt	Item Wt(lbs)

Waste Items by Volume

Material Item	Quantity	Unit	Unit Wt	Item Wt(lbs)

Waste Parameters

Waste Parameter	Remaining Weight %	Actual Weight Lbs
Iron-based Metals/Alloys	0.000	0.000
Aluminum-based Metals/Alloys	0.000	0.000
Other metals	0.000	0.000
Other Inorganic Materials	0.000	0.000
Cellulosics	100.000	66.610
Rubber	0.000	0.000
Plastic (Waste Materials)	0.000	0.000
Inorganic matrix	0.000	0.000
Organic matrix	0.000	0.000
Soils/gravel	0.000	0.000
Steel (packaging materials)	0.000	26.000
Plastic (packaging materials)	0.000	0.000
Cellulosics Packaging	0.000	0.000

Esignature History

Esig Approval Id	User Id	E-signature Date	Comment
2708712	GMATLOCK	03-MAR-14 07:38:00	
2708713	SPEREZ	03-MAR-14 07:38:07	

VE Boxline and Repackaging Report

Batch Id VEB14-00079 **Container Id** 10514184 **Analysis Id** 0000315875

VE Date 03-MAR-14 07:51:15 **Analysis Status** Pass

Gen-IDC Code BN-508 AMWTP Newly Generated Debris **VE Weight** 125.69 lbs.

Closure Date 03-MAR-14 07:51:15 **Procedure Id** INST-FOI-17 **Net Weight** 99.69 lbs.

Container Type 55 **Revision** 27

Operator 1 ANTHONY SIGMON **Waste Matrix** S5490 **Summary Category Group** S5000

Operator 2 ROBERT PURCELL **Equipment ID** VE BiD RPCK

General

Rigid Liner Present? No **Liner Type** NO LINER **Closure Method** No Bags

Liner Punctured? Yes **Layers Of Confinement** 0 **Fill Factor** 60 % **Liner Lid Present** No

Liquids

Liquids Present? No **Comment**

Liquid Between Liner and Drum 0 pints **Other Liquids** 0 pints

Containerized Liquid pints **Total Liquid Amount** 0 pints

Internal Container with Liquid 0 pints

Internal Container with Liquid No

Prohibited Liquids Present No

Containerized Liquid

Contents

Sharp Objects? No **Are Sharp Objects Protected?** Yes

	Value	*Comment*
Prohibited Compressed Gas Present?	No	
Explosives Present?	No	
Pyrophorics Present?	No	
Mercury Present?	No	
PCBs Present?	No	
PCB Mass (lbs)	0	
Wet Cell Batteries Present?	No	
Corrosives,Ignitables or Reactives Present?	No	
Beryllium Contaminates Present?	No	
Hazardous-Only Waste Present?	No	
Is Waste Incompatible with backfill, packaging materials, or shipping container materials?	No	
Sealed Containers Over 4L?	No	

IDC Verification

Is IDC correct? Yes **Recommended IDC** -

IDC Change Reason

Visual Exam Comment Remaining waste by weight percent is Plastic (Waste Materials) consisting of drum liners, sheeting, bags, tape, and PPE.

Batch Id VEB14-00079 **Container Id** 10514184 **Analysis Id** 0000315875

Source Container

Is there a source container? Yes

Source Container ID	Location	IDC
10033553	destroyed @ 676- BXI/15	MD-824

IDC CODES

Current Container IDC Code: BN-508 **Recommended IDC Code:** -

Waste Material Items

Packaging Materials

Material Item	Quantity	Unit	Unit Wt	Item Wt(lbs)

Waste Items by Weight

Material Item	Quantity	Unit	Unit Wt	Item Wt(lbs)

Waste Items by Volume

Material Item	Quantity	Unit	Unit Wt	Item Wt(lbs)
Paper	1.000	PINTS	0.969	0.970
Rubber	3.000	PINTS	1.554	4.660
Glass	1.000	PINTS	2.082	2.080
Floor Sweepings	1.000	PINTS	1.000	1.000

Waste Parameters

Waste Parameter	Remaining Weight %	Actual Weight Lbs
Iron-based Metals/Alloys	0.000	0.000
Aluminum-based Metals/Alloys	0.000	0.000
Other metals	0.000	0.000
Other Inorganic Materials	0.000	3.080
Cellulosics	0.000	0.970
Rubber	0.000	4.660
Plastic (Waste Materials)	100.000	90.975
Inorganic matrix	0.000	0.000
Organic matrix	0.000	0.000
Soils/gravel	0.000	0.000
Steel (packaging materials)	0.000	26.000
Plastic (packaging materials)	0.000	0.000
Cellulosics Packaging	0.000	0.000

Esignature History

Esig Approval Id	User Id	E-signature Date	Comment
2708716	ASIGMEN	03-MAR-14 07:51:15	
2708717	RPURCELL	03-MAR-14 07:51:18	

Batch Id VEB14-00079 **Container Id** 10514131 **Analysis Id** 0000315876

VE Date 03-MAR-14 08:19:08 **Analysis Status** Pass

Gen-IDC Code BN-508 AMWTP Newly Generated Debris **VE Weight** 119.07 lbs.

Closure Date 03-MAR-14 08:19:08 **Procedure Id** INST-FOI-17 **Net Weight** 93.07 lbs.

Container Type 55 **Revision** 27

Operator 1 ANTHONY SIGMON **Waste Matrix** S5490 **Summary Category Group** S5000

Operator 2 ROBERT PURCELL **Equipment ID** VE BiD RPCK

---General---

Rigid Liner Present? No **Liner Type** NO LINER **Closure Method** No Bags

Liner Punctured? Yes **Layers Of Confinement** 0 **Fill Factor** 50 % **Liner Lid Present** No

---Liquids---

Liquids Present? No **Comment**

Liquid Between Liner and Drum 0 pints **Other Liquids** 0 pints

Containerized Liquid pints **Total Liquid Amount** 0 pints

Internal Container with Liquid 0 pints

Internal Container with Liquid No

Prohibited Liquids Present No

Containerized Liquid

---Contents---

Sharp Objects? No **Are Sharp Objects Protected?** Yes

	Value	*Comment*
Prohibited Compressed Gas Present?	No	
Explosives Present?	No	
Pyrophorics Present?	No	
Mercury Present?	No	
PCBs Present?	No	
PCB Mass (lbs)	0	
Wet Cell Batteries Present?	No	
Corrosives,Ignitables or Reactives Present?	No	
Beryllium Contaminates Present?	No	
Hazardous-Only Waste Present?	No	
Is Waste Incompatible with backfill, packaging materials, or shipping container materials?	No	
Sealed Containers Over 4L?	No	

---IDC Verification---

Is IDC correct? Yes **Recommended IDC** -

IDC Change Reason

Visual Exam Comment Remaining waste by weight percent is Cellulosics consisting of wood debris.

Batch Id VEB14-00079 **Container Id** 10514131 **Analysis Id** 0000315876

Source Container

Is there a source container? Yes

Source Container ID	Location	IDC
10033553	destroyed @ 676- BXI/15	MD-824

IDC CODES

Current Container IDC Code: BN-508 **Recommended IDC Code:** -

Waste Material Items

Packaging Materials

Material Item	Quantity	Unit	Unit Wt	Item Wt(lbs)

Waste Items by Weight

Material Item	Quantity	Unit	Unit Wt	Item Wt(lbs)

Waste Items by Volume

Material Item	Quantity	Unit	Unit Wt	Item Wt(lbs)
Plastic	1.000	PINTS	0.937	0.940
Floor Sweepings	1.000	PINTS	1.000	1.000

Waste Parameters

Waste Parameter	Remaining Weight %	Actual Weight Lbs
Iron-based Metals/Alloys	0.000	0.000
Aluminum-based Metals/Alloys	0.000	0.000
Other metals	0.000	0.000
Other Inorganic Materials	0.000	1.000
Cellulosics	100.000	91.130
Rubber	0.000	0.000
Plastic (Waste Materials)	0.000	0.940
Inorganic matrix	0.000	0.000
Organic matrix	0.000	0.000
Soils/gravel	0.000	0.000
Steel (packaging materials)	0.000	26.000
Plastic (packaging materials)	0.000	0.000
Cellulosics Packaging	0.000	0.000

Esignature History

Esig Approval Id	User Id	E-signature Date	Comment
2708725	ASIGMEN	03-MAR-14 08:19:12	
2708726	RPURCELL	03-MAR-14 08:19:13	

Batch Id VEB14-00079 **Container Id** 10514185 **Analysis Id** 0000315877

VE Date 03-MAR-14 08:44:51 **Analysis Status** Pass

Gen-IDC Code BN-508 AMWTP Newly Generated Debris **VE Weight** 119.07 lbs.

Closure Date 03-MAR-14 08:44:51 **Procedure Id** INST-FOI-17 **Net Weight** 93.07 lbs.

Container Type 55 **Revision** 27

Operator 1 ANTHONY SIGMON **Waste Matrix** S5490 **Summary Category Group** S5000

Operator 2 ROBERT PURCELL **Equipment ID** VE BiD RPCK

General

Rigid Liner Present? No **Liner Type** NO LINER **Closure Method** No Bags

Liner Punctured? Yes **Layers Of Confinement** 0 **Fill Factor** 60 % **Liner Lid Present** No

Liquids

Liquids Present? No **Comment**

Liquid Between Liner and Drum 0 pints **Other Liquids** 0 pints

Containerized Liquid pints **Total Liquid Amount** 0 pints

Internal Container with Liquid 0 pints

Internal Container with Liquid No

Prohibited Liquids Present No

Containerized Liquid

Contents

Sharp Objects? No **Are Sharp Objects Protected?** Yes

	Value	*Comment*
Prohibited Compressed Gas Present?	No	
Explosives Present?	No	
Pyrophorics Present?	No	
Mercury Present?	No	
PCBs Present?	No	
PCB Mass (lbs)	0	
Wet Cell Batteries Present?	No	
Corrosives,Ignitables or Reactives Present?	No	
Beryllium Contaminates Present?	No	
Hazardous-Only Waste Present?	No	
Is Waste Incompatible with backfill, packaging materials, or shipping container materials?	No	
Sealed Containers Over 4L?	No	

IDC Verification

Is IDC correct? Yes **Recommended IDC** -

IDC Change Reason

Visual Exam Comment Remaining waste by weight percent is Cellulosics consisting of wood debris.

VE Boxline and Repackaging Report

Batch Id VEB14-00079 **Container Id** 10514185 **Analysis Id** 0000315877

Source Container

Is there a source container? Yes

Source Container ID	Location	IDC
10033553	destroyed @ 676- BXI/15	MD-824

IDC CODES

Current Container IDC Code: BN-508 **Recommended IDC Code:** -

Waste Material Items

Packaging Materials

Material Item	Quantity	Unit	Unit Wt	Item Wt(lbs)

Waste Items by Weight

Material Item	Quantity	Unit	Unit Wt	Item Wt(lbs)

Waste Items by Volume

Material Item	Quantity	Unit	Unit Wt	Item Wt(lbs)

Waste Parameters

Waste Parameter	Remaining Weight %	Actual Weight Lbs
Iron-based Metals/Alloys	0.000	0.000
Aluminum-based Metals/Alloys	0.000	0.000
Other metals	0.000	0.000
Other Inorganic Materials	0.000	0.000
Cellulosics	100.000	93.070
Rubber	0.000	0.000
Plastic (Waste Materials)	0.000	0.000
Inorganic matrix	0.000	0.000
Organic matrix	0.000	0.000
Soils/gravel	0.000	0.000
Steel (packaging materials)	0.000	26.000
Plastic (packaging materials)	0.000	0.000
Cellulosics Packaging	0.000	0.000

Esignature History

Esig Approval Id	User Id	E-signature Date	Comment
2708735	ASIGMEN	03-MAR-14 08:44:51	
2708736	RPURCELL	03-MAR-14 08:44:53	

Batch Id VEB14-00079 **Container Id** 10514202 **Analysis Id** 0000315878

VE Date 03-MAR-14 08:52:51 **Analysis Status** Pass

Gen-IDC Code BN-508 AMWTP Newly Generated Debris **VE Weight** 77.18 lbs.

Closure Date 03-MAR-14 08:52:51 **Procedure Id** INST-FOI-17 **Net Weight** 51.18 lbs.

Container Type 55 **Revision** 27

Operator 1 GUY MATLOCK **Waste Matrix** S5490 **Summary Category Group** S5000

Operator 2 SHIRLEY PEREZ **Equipment ID** VE BiD RPCK

General

Rigid Liner Present? No **Liner Type** NO LINER **Closure Method** No Bags

Liner Punctured? Yes **Layers Of Confinement** 0 **Fill Factor** 55 % **Liner Lid Present** No

Liquids

Liquids Present? No **Comment**

Liquid Between Liner and Drum 0 pints **Other Liquids** 0 pints

Containerized Liquid pints **Total Liquid Amount** 0 pints

Internal Container with Liquid 0 pints

Internal Container with Liquid No

Prohibited Liquids Present No

Containerized Liquid

Contents

Sharp Objects? No **Are Sharp Objects Protected?** Yes

	Value	*Comment*
Prohibited Compressed Gas Present?	No	
Explosives Present?	No	
Pyrophorics Present?	No	
Mercury Present?	No	
PCBs Present?	No	
PCB Mass (lbs)	0	
Wet Cell Batteries Present?	No	
Corrosives,Ignitables or Reactives Present?	No	
Beryllium Contaminates Present?	No	
Hazardous-Only Waste Present?	No	
Is Waste Incompatible with backfill, packaging materials, or shipping container materials?	No	
Sealed Containers Over 4L?	No	

IDC Verification

Is IDC correct? Yes **Recommended IDC** -

IDC Change Reason

Visual Exam Comment The remaining waste by weight percent is Plastic (Waste Materials) consisting of plastic drum liner and bags

VE Boxline and Repackaging Report

Batch Id VEB14-00079 **Container Id** 10514202 **Analysis Id** 0000315878

Source Container

Is there a source container? Yes

Source Container ID	Location	IDC
10033558	destroyed @ 676- BXI/9	MD-824

IDC CODES

Current Container IDC Code: BN-508 **Recommended IDC Code:** -

Waste Material Items

Packaging Materials

Material Item	Quantity	Unit	Unit Wt	Item Wt(lbs)

Waste Items by Weight

Material Item	Quantity	Unit	Unit Wt	Item Wt(lbs)

Waste Items by Volume

Material Item	Quantity	Unit	Unit Wt	Item Wt(lbs)
Wood	10.000	PINTS	0.702	7.020

Waste Parameters

Waste Parameter	Remaining Weight %	Actual Weight Lbs
Iron-based Metals/Alloys	0.000	0.000
Aluminum-based Metals/Alloys	0.000	0.000
Other metals	0.000	0.000
Other Inorganic Materials	0.000	0.000
Cellulosics	0.000	7.020
Rubber	0.000	0.000
Plastic (Waste Materials)	100.000	44.155
Inorganic matrix	0.000	0.000
Organic matrix	0.000	0.000
Soils/gravel	0.000	0.000
Steel (packaging materials)	0.000	26.000
Plastic (packaging materials)	0.000	0.000
Cellulosics Packaging	0.000	0.000

Esignature History

Esig Approval Id	User Id	E-signature Date	Comment
2708753	GMATLOCK	03-MAR-14 08:52:51	
2708754	SPEREZ	03-MAR-14 08:52:53	

VE Boxline and Repackaging Report

Batch Id VEB14-00079 **Container Id** 10514212 **Analysis Id** 0000315879

VE Date 03-MAR-14 09:03:05 **Analysis Status** Pass

Gen-IDC Code BN-508 AMWTP Newly Generated Debris **VE Weight** 110.25 lbs.

Closure Date 03-MAR-14 09:03:05 **Procedure Id** INST-FOI-17 **Net Weight** 84.25 lbs.

Container Type 55 **Revision** 27

Operator 1 GUY MATLOCK **Waste Matrix** S5490 **Summary Category Group** S5000

Operator 2 SHIRLEY PEREZ **Equipment ID** VE BiD RPCK

General

Rigid Liner Present? No **Liner Type** NO LINER **Closure Method** No Bags

Liner Punctured? Yes **Layers Of Confinement** 0 **Fill Factor** 60 % **Liner Lid Present** No

Liquids

Liquids Present? No **Comment**

Liquid Between Liner and Drum 0 pints **Other Liquids** 0 pints

Containerized Liquid pints **Total Liquid Amount** 0 pints

Internal Container with Liquid 0 pints

Internal Container with Liquid No

Prohibited Liquids Present No

Containerized Liquid

Contents

Sharp Objects? No **Are Sharp Objects Protected?** Yes

	Value	*Comment*
Prohibited Compressed Gas Present?	No	
Explosives Present?	No	
Pyrophorics Present?	No	
Mercury Present?	No	
PCBs Present?	No	
PCB Mass (lbs)	0	
Wet Cell Batteries Present?	No	
Corrosives,Ignitables or Reactives Present?	No	
Beryllium Contaminates Present?	No	
Hazardous-Only Waste Present?	No	
Is Waste Incompatible with backfill, packaging materials, or shipping container materials?	No	
Sealed Containers Over 4L?	No	

IDC Verification

Is IDC correct? Yes **Recommended IDC** -

IDC Change Reason

Visual Exam Comment The remaining waste by weight percent is Cellulosics consisting of wood debris and cardboard.

Batch Id VEB14-00079 **Container Id** 10514212 **Analysis Id** 0000315879

Source Container

Is there a source container? Yes

Source Container ID	Location	IDC
10033558	destroyed @ 676- BXI/9	MD-824

IDC CODES

Current Container IDC Code: BN-508 **Recommended IDC Code:** -

Waste Material Items

Packaging Materials

Material Item	Quantity	Unit	Unit Wt	Item Wt(lbs)

Waste Items by Weight

Material Item	Quantity	Unit	Unit Wt	Item Wt(lbs)

Waste Items by Volume

Material Item	Quantity	Unit	Unit Wt	Item Wt(lbs)
Plastic	2.000	PINTS	0.937	1.870
Floor Sweepings	2.000	PINTS	1.000	2.000

Waste Parameters

Waste Parameter	Remaining Weight %	Actual Weight Lbs
Iron-based Metals/Alloys	0.000	0.000
Aluminum-based Metals/Alloys	0.000	0.000
Other metals	0.000	0.000
Other Inorganic Materials	0.000	2.000
Cellulosics	100.000	80.380
Rubber	0.000	0.000
Plastic (Waste Materials)	0.000	1.870
Inorganic matrix	0.000	0.000
Organic matrix	0.000	0.000
Soils/gravel	0.000	0.000
Steel (packaging materials)	0.000	26.000
Plastic (packaging materials)	0.000	0.000
Cellulosics Packaging	0.000	0.000

Esignature History

Esig Approval Id	User Id	E-signature Date	Comment
2708760	GMATLOCK	03-MAR-14 09:03:05	
2708761	SPEREZ	03-MAR-14 09:03:07	

VE Boxline and Repackaging Report

Batch Id VEB14-00079 **Container Id** 10514214 **Analysis Id** 0000315880

VE Date 03-MAR-14 09:32:10 **Analysis Status** Pass

Gen-IDC Code BN-508 AMWTP Newly Generated Debris **VE Weight** 123.48 lbs.

Closure Date 03-MAR-14 09:32:10 **Procedure Id** INST-FOI-17 **Net Weight** 97.48 lbs.

Container Type 55 **Revision** 27

Operator 1 ANTHONY SIGMON **Waste Matrix** S5490 **Summary Category Group** S5000

Operator 2 ROBERT PURCELL **Equipment ID** VE BiD RPCK

General

Rigid Liner Present? No **Liner Type** NO LINER **Closure Method** No Bags

Liner Punctured? Yes **Layers Of Confinement** 0 **Fill Factor** 55 % **Liner Lid Present** No

Liquids

Liquids Present? No **Comment**

Liquid Between Liner and Drum 0 pints **Other Liquids** 0 pints

Containerized Liquid pints **Total Liquid Amount** 0 pints

Internal Container with Liquid 0 pints

Internal Container with Liquid No

Prohibited Liquids Present No

Containerized Liquid

Contents

Sharp Objects? No **Are Sharp Objects Protected?** Yes

	Value	Comment
Prohibited Compressed Gas Present?	No	
Explosives Present?	No	
Pyrophorics Present?	No	
Mercury Present?	No	
PCBs Present?	No	
PCB Mass (lbs)	0	
Wet Cell Batteries Present?	No	
Corrosives,Ignitables or Reactives Present?	No	
Beryllium Contaminates Present?	No	
Hazardous-Only Waste Present?	No	
Is Waste Incompatible with backfill, packaging materials, or shipping container materials?	No	
Sealed Containers Over 4L?	No	

IDC Verification

Is IDC correct? Yes **Recommended IDC** -

IDC Change Reason

Visual Exam Comment Remaining waste by weight percent is Cellulosics consisting of wood debris.

Batch Id VEB14-00079 **Container Id** 10514214 **Analysis Id** 0000315880

Source Container

Is there a source container? Yes

Source Container ID	Location	IDC
10033553	destroyed @ 676- BXI/15	MD-824

IDC CODES

Current Container IDC Code: BN-508 **Recommended IDC Code:** -

Waste Material Items

Packaging Materials

Material Item	Quantity	Unit	Unit Wt	Item Wt(lbs)

Waste Items by Weight

Material Item	Quantity	Unit	Unit Wt	Item Wt(lbs)

Waste Items by Volume

Material Item	Quantity	Unit	Unit Wt	Item Wt(lbs)
Plastic	15.000	PINTS	0.937	14.060

Waste Parameters

Waste Parameter	Remaining Weight %	Actual Weight Lbs
Iron-based Metals/Alloys	0.000	0.000
Aluminum-based Metals/Alloys	0.000	0.000
Other metals	0.000	0.000
Other Inorganic Materials	0.000	0.000
Cellulosics	100.000	83.420
Rubber	0.000	0.000
Plastic (Waste Materials)	0.000	14.060
Inorganic matrix	0.000	0.000
Organic matrix	0.000	0.000
Soils/gravel	0.000	0.000
Steel (packaging materials)	0.000	26.000
Plastic (packaging materials)	0.000	0.000
Cellulosics Packaging	0.000	0.000

Esignature History

Esig Approval Id	User Id	E-signature Date	Comment
2708768	ASIGMEN	03-MAR-14 09:32:11	
2708769	RPURCELL	03-MAR-14 09:32:15	

Batch Id VEB14-00079 **Container Id** 10514204 **Analysis Id** 0000315881

VE Date 03-MAR-14 09:41:31 **Analysis Status** Pass

Gen-IDC Code BN-508 AMWTP Newly Generated Debris **VE Weight** 114.66 lbs.

Closure Date 03-MAR-14 09:41:31 **Procedure Id** INST-FOI-17 **Net Weight** 88.66 lbs.

Container Type 55 **Revision** 27

Operator 1 GUY MATLOCK **Waste Matrix** S5490 **Summary Category Group** S5000

Operator 2 SHIRLEY PEREZ **Equipment ID** VE BiD RPCK

General

Rigid Liner Present? No **Liner Type** NO LINER **Closure Method** No Bags

Liner Punctured? Yes **Layers Of Confinement** 0 **Fill Factor** 60 % **Liner Lid Present** No

Liquids

Liquids Present? No **Comment**

Liquid Between Liner and Drum 0 pints **Other Liquids** 0 pints

Containerized Liquid pints **Total Liquid Amount** 0 pints

Internal Container with Liquid 0 pints

Internal Container with Liquid No

Prohibited Liquids Present No

Containerized Liquid

Contents

Sharp Objects? No **Are Sharp Objects Protected?** Yes

	Value	*Comment*
Prohibited Compressed Gas Present?	No	
Explosives Present?	No	
Pyrophorics Present?	No	
Mercury Present?	No	
PCBs Present?	No	
PCB Mass (lbs)	0	
Wet Cell Batteries Present?	No	
Corrosives,Ignitables or Reactives Present?	No	
Beryllium Contaminates Present?	No	
Hazardous-Only Waste Present?	No	
Is Waste Incompatible with backfill, packaging materials, or shipping container materials?	No	
Sealed Containers Over 4L?	No	

IDC Verification

Is IDC correct? Yes **Recommended IDC** -

IDC Change Reason

Visual Exam Comment The remaining waste by weight percent is Cellulosics consisting of wood debris and cardboard.

AMWTP
Advanced Mixed Waste Treatment Project

VE Boxline and Repackaging Report

Batch Id VEB14-00079 **Container Id** 10514204 **Analysis Id** 0000315881

Source Container

Is there a source container? Yes

Source Container ID	Location	IDC
10033558	destroyed @ 676- BXI/9	MD-824

IDC CODES

Current Container IDC Code: BN-508 **Recommended IDC Code:** -

Waste Material Items

Packaging Materials

Material Item	Quantity	Unit	Unit Wt	Item Wt(lbs)

Waste Items by Weight

Material Item	Quantity	Unit	Unit Wt	Item Wt(lbs)

Waste Items by Volume

Material Item	Quantity	Unit	Unit Wt	Item Wt(lbs)
Plastic	4.000	PINTS	0.937	3.750
Floor Sweepings	2.000	PINTS	1.000	2.000

Waste Parameters

Waste Parameter	Remaining Weight %	Actual Weight Lbs
Iron-based Metals/Alloys	0.000	0.000
Aluminum-based Metals/Alloys	0.000	0.000
Other metals	0.000	0.000
Other Inorganic Materials	0.000	2.000
Cellulosics	100.000	82.910
Rubber	0.000	0.000
Plastic (Waste Materials)	0.000	3.750
Inorganic matrix	0.000	0.000
Organic matrix	0.000	0.000
Soils/gravel	0.000	0.000
Steel (packaging materials)	0.000	26.000
Plastic (packaging materials)	0.000	0.000
Cellulosics Packaging	0.000	0.000

Esignature History

Esig Approval Id	User Id	E-signature Date	Comment
2708775	GMATLOCK	03-MAR-14 09:41:31	
2708777	SPEREZ	03-MAR-14 09:41:32	

VE Boxline and Repackaging Report

Batch Id VEB14-00079 **Container Id** 10514203 **Analysis Id** 0000315882

VE Date 03-MAR-14 09:49:44 **Analysis Status** Pass

Gen-IDC Code BN-508 AMWTP Newly Generated Debris **VE Weight** 114.66 **lbs.**

Closure Date 03-MAR-14 09:49:44 **Procedure Id** INST-FOI-17 **Net Weight** 88.66 **lbs.**

Container Type 55 **Revision** 27

Operator 1 ANTHONY SIGMON **Waste Matrix** S5490 **Summary Category Group** S5000

Operator 2 ROBERT PURCELL **Equipment ID** VE BiD RPCK

General

Rigid Liner Present? No **Liner Type** NO LINER **Closure Method** No Bags

Liner Punctured? Yes **Layers Of Confinement** 0 **Fill Factor** 55 % **Liner Lid Present** No

Liquids

Liquids Present? No **Comment**

Liquid Between Liner and Drum 0 pints **Other Liquids** 0 pints

Containerized Liquid pints **Total Liquid Amount** 0 pints

Internal Container with Liquid 0 pints

Internal Container with Liquid No

Prohibited Liquids Present No

Containerized Liquid

Contents

Sharp Objects? No **Are Sharp Objects Protected?** Yes

	Value	*Comment*
Prohibited Compressed Gas Present?	No	
Explosives Present?	No	
Pyrophorics Present?	No	
Mercury Present?	No	
PCBs Present?	No	
PCB Mass (lbs)	0	
Wet Cell Batteries Present?	No	
Corrosives,Ignitables or Reactives Present?	No	
Beryllium Contaminates Present?	No	
Hazardous-Only Waste Present?	No	
Is Waste Incompatible with backfill, packaging materials, or shipping container materials?	No	
Sealed Containers Over 4L?	No	

IDC Verification

Is IDC correct? Yes **Recommended IDC** -

IDC Change Reason

Visual Exam Comment Remaining waste by weight percent is Cellulosics consisting of wood debris.

Batch Id VEB14-00079 **Container Id** 10514203 **Analysis Id** 0000315882

Source Container

Is there a source container? Yes

Source Container ID	Location	IDC
10033553	destroyed @ 676- BXI/15	MD-824

IDC CODES

Current Container IDC Code: BN-508 **Recommended IDC Code:** -

Waste Material Items

Packaging Materials

Material Item	Quantity	Unit	Unit Wt	Item Wt(lbs)

Waste Items by Weight

Material Item	Quantity	Unit	Unit Wt	Item Wt(lbs)

Waste Items by Volume

Material Item	Quantity	Unit	Unit Wt	Item Wt(lbs)
Plastic	1.000	PINTS	0.937	0.940

Waste Parameters

Waste Parameter	Remaining Weight %	Actual Weight Lbs
Iron-based Metals/Alloys	0.000	0.000
Aluminum-based Metals/Alloys	0.000	0.000
Other metals	0.000	0.000
Other Inorganic Materials	0.000	0.000
Cellulosics	100.000	87.720
Rubber	0.000	0.000
Plastic (Waste Materials)	0.000	0.940
Inorganic matrix	0.000	0.000
Organic matrix	0.000	0.000
Soils/gravel	0.000	0.000
Steel (packaging materials)	0.000	26.000
Plastic (packaging materials)	0.000	0.000
Cellulosics Packaging	0.000	0.000

Esignature History

Esig Approval Id	User id	E-signature Date	Comment
2708782	ASIGMEN	03-MAR-14 09:49:44	
2708783	RPURCELL	03-MAR-14 09:49:45	

Batch Id VEB14-00079 **Container Id** 10514205 **Analysis Id** 0000315883

VE Date 03-MAR-14 09:49:22 **Analysis Status** Pass

Gen-IDC Code BN-508 AMWTP Newly Generated Debris **VE Weight** 112.46 lbs.

Closure Date 03-MAR-14 09:49:22 **Procedure Id** INST-FOI-17 **Net Weight** 86.46 lbs.

Container Type 55 **Revision** 27

Operator 1 GUY MATLOCK **Waste Matrix** S5490 **Summary Category Group** S5000

Operator 2 SHIRLEY PEREZ **Equipment ID** VE BiD RPCK

General

Rigid Liner Present? No **Liner Type** NO LINER **Closure Method** No Bags

Liner Punctured? Yes **Layers Of Confinement** 0 **Fill Factor** 60 % **Liner Lid Present** No

Liquids

Liquids Present? No **Comment**

Liquid Between Liner and Drum 0 pints **Other Liquids** 0 pints

Containerized Liquid pints **Total Liquid Amount** 0 pints

Internal Container with Liquid 0 pints

Internal Container with Liquid No

Prohibited Liquids Present No

Containerized Liquid

Contents

Sharp Objects? No **Are Sharp Objects Protected?** Yes

	Value	*Comment*
Prohibited Compressed Gas Present?	No	
Explosives Present?	No	
Pyrophorics Present?	No	
Mercury Present?	No	
PCBs Present?	No	
PCB Mass (lbs)	0	
Wet Cell Batteries Present?	No	
Corrosives,Ignitables or Reactives Present?	No	
Beryllium Contaminates Present?	No	
Hazardous-Only Waste Present?	No	
Is Waste Incompatible with backfill, packaging materials, or shipping container materials?	No	
Sealed Containers Over 4L?	No	

IDC Verification

Is IDC correct? Yes **Recommended IDC** -

IDC Change Reason

Visual Exam Comment The remaining waste by weight percent is Cellulosics consisting of wood debris and cardboard.

Batch Id VEB14-00079 **Container Id** 10514205 **Analysis Id** 0000315883

Source Container

Is there a source container? Yes

Source Container ID	Location	IDC
10033558	destroyed @ 676- BXI/9	MD-824

IDC CODES

Current Container IDC Code: BN-508 **Recommended IDC Code:** -

Waste Material Items

Packaging Materials

Material Item	Quantity	Unit	Unit Wt	Item Wt(lbs)

Waste Items by Weight

Material Item	Quantity	Unit	Unit Wt	Item Wt(lbs)

Waste Items by Volume

Material Item	Quantity	Unit	Unit Wt	Item Wt(lbs)
Plastic	4.000	PINTS	0.937	3.750
Floor Sweepings	2.000	PINTS	1.000	2.000

Waste Parameters

Waste Parameter	Remaining Weight %	Actual Weight Lbs
Iron-based Metals/Alloys	0.000	0.000
Aluminum-based Metals/Alloys	0.000	0.000
Other metals	0.000	0.000
Other Inorganic Materials	0.000	2.000
Cellulosics	100.000	80.705
Rubber	0.000	0.000
Plastic (Waste Materials)	0.000	3.750
Inorganic matrix	0.000	0.000
Organic matrix	0.000	0.000
Soils/gravel	0.000	0.000
Steel (packaging materials)	0.000	26.000
Plastic (packaging materials)	0.000	0.000
Cellulosics Packaging	0.000	0.000

Esignature History

Esig Approval Id	User Id	E-signature Date	Comment
2708780	GMATLOCK	03-MAR-14 09:49:23	
2708781	SPEREZ	03-MAR-14 09:49:25	

Batch Id VEB14-00079 **Container Id** 10514211 **Analysis Id** 0000315888

VE Date 03-MAR-14 10:09:57 **Analysis Status** Pass

Gen-IDC Code BN-508 AMWTP Newly Generated Debris **VE Weight** 121.28 lbs.

Closure Date 03-MAR-14 10:09:57 **Procedure Id** INST-FOI-17 **Net Weight** 95.28 lbs.

Container Type 55 **Revision** 27

Operator 1 ANTHONY SIGMON **Waste Matrix** S5490 **Summary Category Group** S5000

Operator 2 ROBERT PURCELL **Equipment ID** VE BiD RPCK

General

Rigid Liner Present? No **Liner Type** NO LINER **Closure Method** No Bags

Liner Punctured? Yes **Layers Of Confinement** 0 **Fill Factor** 60 % **Liner Lid Present** No

Liquids

Liquids Present? No **Comment**

Liquid Between Liner and Drum 0 pints **Other Liquids** 0 pints

Containerized Liquid pints **Total Liquid Amount** 0 pints

Internal Container with Liquid 0 pints

Internal Container with Liquid No

Prohibited Liquids Present No

Containerized Liquid

Contents

Sharp Objects? No **Are Sharp Objects Protected?** Yes

	Value	*Comment*
Prohibited Compressed Gas Present?	No	
Explosives Present?	No	
Pyrophorics Present?	No	
Mercury Present?	No	
PCBs Present?	No	
PCB Mass (lbs)	0	
Wet Cell Batteries Present?	No	
Corrosives,Ignitables or Reactives Present?	No	
Beryllium Contaminates Present?	No	
Hazardous-Only Waste Present?	No	
Is Waste Incompatible with backfill, packaging materials, or shipping container materials?	No	
Sealed Containers Over 4L?	No	

IDC Verification

Is IDC correct? Yes **Recommended IDC** -

IDC Change Reason

Visual Exam Comment Remaining waste by weight percent is Cellulosics consisting of wood debris.

VE Boxline and Repackaging Report

Batch Id VEB14-00079 **Container Id** 10514211 **Analysis Id** 0000315888

Source Container

Is there a source container? Yes

Source Container ID	Location	IDC
10033553	destroyed @ 676- BXI/15	MD-824

IDC CODES

Current Container IDC Code: BN-508 **Recommended IDC Code:** -

Waste Material Items

Packaging Materials

Material Item	Quantity	Unit	Unit Wt	Item Wt(lbs)

Waste Items by Weight

Material Item	Quantity	Unit	Unit Wt	Item Wt(lbs)

Waste Items by Volume

Material Item	Quantity	Unit	Unit Wt	Item Wt(lbs)

Waste Parameters

Waste Parameter	Remaining Weight %	Actual Weight Lbs
Iron-based Metals/Alloys	0.000	0.000
Aluminum-based Metals/Alloys	0.000	0.000
Other metals	0.000	0.000
Other Inorganic Materials	0.000	0.000
Cellulosics	100.000	95.275
Rubber	0.000	0.000
Plastic (Waste Materials)	0.000	0.000
Inorganic matrix	0.000	0.000
Organic matrix	0.000	0.000
Soils/gravel	0.000	0.000
Steel (packaging materials)	0.000	26.000
Plastic (packaging materials)	0.000	0.000
Cellulosics Packaging	0.000	0.000

Esignature History

Esig Approval Id	User Id	E-signature Date	Comment
2708810	ASIGMEN	03-MAR-14 10:09:58	
2708811	RPURCELL	03-MAR-14 10:10:05	

Batch Id VEB14-00079 **Container Id** 10514210 **Analysis Id** 0000315889

VE Date 03-MAR-14 10:35:25 **Analysis Status** Pass

Gen-IDC Code BN-508 AMWTP Newly Generated Debris **VE Weight** 105.84 lbs.

Closure Date 03-MAR-14 10:35:25 **Procedure Id** INST-FOI-17 **Net Weight** 79.84 lbs.

Container Type 55 **Revision** 27

Operator 1 GUY MATLOCK **Waste Matrix** S5490 **Summary Category Group** S5000

Operator 2 SHIRLEY PEREZ **Equipment ID** VE BiD RPCK

General

Rigid Liner Present? No **Liner Type** NO LINER **Closure Method** No Bags

Liner Punctured? Yes **Layers Of Confinement** 0 **Fill Factor** 60 % **Liner Lid Present** No

Liquids

Liquids Present? No **Comment**

Liquid Between Liner and Drum 0 pints **Other Liquids** 0 pints

Containerized Liquid pints **Total Liquid Amount** 0 pints

Internal Container with Liquid 0 pints

Internal Container with Liquid No

Prohibited Liquids Present No

Containerized Liquid

Contents

Sharp Objects? No **Are Sharp Objects Protected?** Yes

	Value	*Comment*
Prohibited Compressed Gas Present?	No	
Explosives Present?	No	
Pyrophorics Present?	No	
Mercury Present?	No	
PCBs Present?	No	
PCB Mass (lbs)	0	
Wet Cell Batteries Present?	No	
Corrosives,Ignitables or Reactives Present?	No	
Beryllium Contaminates Present?	No	
Hazardous-Only Waste Present?	No	
Is Waste Incompatible with backfill, packaging materials, or shipping container materials?	No	
Sealed Containers Over 4L?	No	

IDC Verification

Is IDC correct? Yes **Recommended IDC** -

IDC Change Reason

Visual Exam Comment The remaining waste by weight percent is Plastic (Waste Materials) consisting of bags, tape and plastic drum liner

Batch Id VEB14-00079 **Container Id** 10514210 **Analysis Id** 0000315889

Source Container

Is there a source container? Yes

Source Container ID	Location	IDC
10033558	destroyed @ 676- BXI/9	MD-824

IDC CODES

Current Container IDC Code: BN-508 **Recommended IDC Code:** -

Waste Material Items

Packaging Materials

Material Item	Quantity	Unit	Unit Wt	Item Wt(lbs)

Waste Items by Weight

Material Item	Quantity	Unit	Unit Wt	Item Wt(lbs)

Waste Items by Volume

Material Item	Quantity	Unit	Unit Wt	Item Wt(lbs)
Wood	9.000	PINTS	0.702	6.320

Waste Parameters

Waste Parameter	Remaining Weight %	Actual Weight Lbs
Iron-based Metals/Alloys	0.000	0.000
Aluminum-based Metals/Alloys	0.000	0.000
Other metals	0.000	0.000
Other Inorganic Materials	0.000	0.000
Cellulosics	0.000	6.320
Rubber	0.000	0.000
Plastic (Waste Materials)	100.000	73.520
Inorganic matrix	0.000	0.000
Organic matrix	0.000	0.000
Soils/gravel	0.000	0.000
Steel (packaging materials)	0.000	26.000
Plastic (packaging materials)	0.000	0.000
Cellulosics Packaging	0.000	0.000

Esignature History

Esig Approval Id	User Id	E-signature Date	Comment
2708841	GMATLOCK	03-MAR-14 10:35:26	
2708843	SPEREZ	03-MAR-14 10:35:30	

Batch Id VEB14-00079 **Container Id** 10514209 **Analysis Id** 0000315903

VE Date 03-MAR-14 19:48:29 **Analysis Status** Pass

Gen-IDC Code BN-508 AMWTP Newly Generated Debris **VE Weight** 61.74 lbs.

Closure Date 03-MAR-14 19:48:29 **Procedure Id** INST-FOI-17 **Net Weight** 35.74 lbs.

Container Type 55 **Revision** 27

Operator 1 MIKE REIDER **Waste Matrix** S5490 **Summary Category Group** S5000

Operator 2 JEFFREY K BAILEY **Equipment ID** VE BiD RPCK

General

Rigid Liner Present? No **Liner Type** NO LINER **Closure Method** No Bags

Liner Punctured? Yes **Layers Of Confinement** 0 **Fill Factor** 80 % **Liner Lid Present** No

Liquids

Liquids Present? No **Comment**

Liquid Between Liner and Drum 0 pints **Other Liquids** 0 pints

Containerized Liquid pints **Total Liquid Amount** 0 pints

Internal Container with Liquid 0 pints

Internal Container with Liquid No

Prohibited Liquids Present No

Containerized Liquid

Contents

Sharp Objects? No **Are Sharp Objects Protected?** Yes

	Value	*Comment*
Prohibited Compressed Gas Present?	No	
Explosives Present?	No	
Pyrophorics Present?	No	
Mercury Present?	No	
PCBs Present?	No	
PCB Mass (lbs)	0	
Wet Cell Batteries Present?	No	
Corrosives,Ignitables or Reactives Present?	No	
Beryllium Contaminates Present?	No	
Hazardous-Only Waste Present?	No	
Is Waste Incompatible with backfill, packaging materials, or shipping container materials?	No	
Sealed Containers Over 4L?	No	

IDC Verification

Is IDC correct? Yes **Recommended IDC** -

IDC Change Reason

Visual Exam Comment Remaining waste by weight percent is misc. plastics, plastic bags, sheeting, ppe and drum liners

Batch Id VEB14-00079 **Container Id** 10514209 **Analysis Id** 0000315903

Source Container

Is there a source container? Yes

Source Container ID	Location	IDC
10033558	destroyed @ 676- BXI/9	MD-824

IDC CODES

Current Container IDC Code: BN-508 **Recommended IDC Code:** -

Waste Material Items

Packaging Materials

Material Item	Quantity	Unit	Unit Wt	Item Wt(lbs)

Waste Items by Weight

Material Item	Quantity	Unit	Unit Wt	Item Wt(lbs)

Waste Items by Volume

Material Item	Quantity	Unit	Unit Wt	Item Wt(lbs)

Waste Parameters

Waste Parameter	Remaining Weight %	Actual Weight Lbs
Iron-based Metals/Alloys	0.000	0.000
Aluminum-based Metals/Alloys	0.000	0.000
Other metals	0.000	0.000
Other Inorganic Materials	0.000	0.000
Cellulosics	0.000	0.000
Rubber	0.000	0.000
Plastic (Waste Materials)	100.000	35.740
Inorganic matrix	0.000	0.000
Organic matrix	0.000	0.000
Soils/gravel	0.000	0.000
Steel (packaging materials)	0.000	26.000
Plastic (packaging materials)	0.000	0.000
Cellulosics Packaging	0.000	0.000

Esignature History

Esig Approval Id	User Id	E-signature Date	Comment
2709232	MREIDER	03-MAR-14 19:48:29	
2709233	JBAILEY	03-MAR-14 19:48:31	

Batch Id VEB14-00079 **Container Id** 10514207 **Analysis Id** 0000315904

VE Date 03-MAR-14 20:21:03 **Analysis Status** Pass

Gen-IDC Code BN-508 AMWTP Newly Generated Debris **VE Weight** 52.92 lbs.

Closure Date 03-MAR-14 20:21:03 **Procedure Id** INST-FOI-17 **Net Weight** 26.92 lbs.

Container Type 55 **Revision** 27

Operator 1 MIKE REIDER **Waste Matrix** S5490 **Summary Category Group** S5000

Operator 2 JEFFREY K BAILEY **Equipment ID** VE BiD RPCK

General

Rigid Liner Present? No **Liner Type** NO LINER **Closure Method** No Bags

Liner Punctured? Yes **Layers Of Confinement** 0 **Fill Factor** 75 % **Liner Lid Present** No

Liquids

Liquids Present? No **Comment**

Liquid Between Liner and Drum 0 pints **Other Liquids** 0 pints

Containerized Liquid pints **Total Liquid Amount** 0 pints

Internal Container with Liquid 0 pints

Internal Container with Liquid No

Prohibited Liquids Present No

Containerized Liquid

Contents

Sharp Objects? No **Are Sharp Objects Protected?** Yes

	Value	*Comment*
Prohibited Compressed Gas Present?	No	
Explosives Present?	No	
Pyrophorics Present?	No	
Mercury Present?	No	
PCBs Present?	No	
PCB Mass (lbs)	0	
Wet Cell Batteries Present?	No	
Corrosives,Ignitables or Reactives Present?	No	
Beryllium Contaminates Present?	No	
Hazardous-Only Waste Present?	No	
Is Waste Incompatible with backfill, packaging materials, or shipping container materials?	No	
Sealed Containers Over 4L?	No	

IDC Verification

Is IDC correct? Yes **Recommended IDC** -

IDC Change Reason

Visual Exam Comment Remaining waste by weight percent is plastics, plastic bags, sheeting, drum liners

Batch Id VEB14-00079 **Container Id** 10514207 **Analysis Id** 0000315904

Source Container

Is there a source container? Yes

Source Container ID	Location	IDC
10033558	destroyed @ 676- BXI/9	MD-824

IDC CODES

Current Container IDC Code: BN-508 **Recommended IDC Code:** -

Waste Material Items

Packaging Materials

Material Item	Quantity	Unit	Unit Wt	Item Wt(lbs)

Waste Items by Weight

Material Item	Quantity	Unit	Unit Wt	Item Wt(lbs)

Waste Items by Volume

Material Item	Quantity	Unit	Unit Wt	Item Wt(lbs)

Waste Parameters

Waste Parameter	Remaining Weight %	Actual Weight Lbs
Iron-based Metals/Alloys	0.000	0.000
Aluminum-based Metals/Alloys	0.000	0.000
Other metals	0.000	0.000
Other Inorganic Materials	0.000	0.000
Cellulosics	0.000	0.000
Rubber	0.000	0.000
Plastic (Waste Materials)	100.000	26.920
Inorganic matrix	0.000	0.000
Organic matrix	0.000	0.000
Soils/gravel	0.000	0.000
Steel (packaging materials)	0.000	26.000
Plastic (packaging materials)	0.000	0.000
Cellulosics Packaging	0.000	0.000

Esignature History

Esig Approval Id	User Id	E-signature Date	Comment
2709234	MREIDER	03-MAR-14 20:21:04	
2709235	JBAILEY	03-MAR-14 20:21:06	

Batch Id VEB14-00079 **Container Id** 10514231 **Analysis Id** 0000315905

VE Date 03-MAR-14 20:26:34 **Analysis Status** Pass

Gen-IDC Code BN-508 AMWTP Newly Generated Debris **VE Weight** 90.41 lbs.

Closure Date 03-MAR-14 20:26:34 **Procedure Id** INST-FOI-17 **Net Weight** 64.41 lbs.

Container Type 55 **Revision** 27

Operator 1 MIKE REIDER **Waste Matrix** S5490 **Summary Category Group** S5000

Operator 2 JEFFREY K BAILEY **Equipment ID** VE BiD RPCK

General

Rigid Liner Present? No **Liner Type** NO LINER **Closure Method** No Bags

Liner Punctured? Yes **Layers Of Confinement** 0 **Fill Factor** 80 % **Liner Lid Present** No

Liquids

Liquids Present? No **Comment**

Liquid Between Liner and Drum 0 pints **Other Liquids** 0 pints

Containerized Liquid pints **Total Liquid Amount** 0 pints

Internal Container with Liquid 0 pints

Internal Container with Liquid No

Prohibited Liquids Present No

Containerized Liquid

Contents

Sharp Objects? No **Are Sharp Objects Protected?** Yes

	Value	*Comment*
Prohibited Compressed Gas Present?	No	
Explosives Present?	No	
Pyrophorics Present?	No	
Mercury Present?	No	
PCBs Present?	No	
PCB Mass (lbs)	0	
Wet Cell Batteries Present?	No	
Corrosives,Ignitables or Reactives Present?	No	
Beryllium Contaminates Present?	No	
Hazardous-Only Waste Present?	No	
Is Waste Incompatible with backfill, packaging materials, or shipping container materials?	No	
Sealed Containers Over 4L?	No	

IDC Verification

Is IDC correct? Yes **Recommended IDC** -

IDC Change Reason

Visual Exam Comment Remaining waste by weight percent is cellulosics consisting of wood and cardboard

VE Boxline and Repackaging Report

Batch Id VEB14-00079 **Container Id** 10514231 **Analysis Id** 0000315905

Source Container

Is there a source container? Yes

Source Container ID	Location	IDC
10033558	destroyed @ 676- BXI/9	MD-824

IDC CODES

Current Container IDC Code: BN-508 **Recommended IDC Code:** -

Waste Material Items

Packaging Materials

Material Item	Quantity	Unit	Unit Wt	Item Wt(lbs)

Waste Items by Weight

Material Item	Quantity	Unit	Unit Wt	Item Wt(lbs)

Waste Items by Volume

Material Item	Quantity	Unit	Unit Wt	Item Wt(lbs)
Plastic	2.000	PINTS	0.937	1.870

Waste Parameters

Waste Parameter	Remaining Weight %	Actual Weight Lbs
Iron-based Metals/Alloys	0.000	0.000
Aluminum-based Metals/Alloys	0.000	0.000
Other metals	0.000	0.000
Other Inorganic Materials	0.000	0.000
Cellulosics	100.000	62.535
Rubber	0.000	0.000
Plastic (Waste Materials)	0.000	1.870
Inorganic matrix	0.000	0.000
Organic matrix	0.000	0.000
Soils/gravel	0.000	0.000
Steel (packaging materials)	0.000	26.000
Plastic (packaging materials)	0.000	0.000
Cellulosics Packaging	0.000	0.000

Esignature History

Esig Approval Id	User Id	E-signature Date	Comment
2709236	MREIDER	03-MAR-14 20:26:35	
2709237	JBAILEY	03-MAR-14 20:26:37	

VE Boxline and Repackaging Report

Batch Id VEB14-00079 **Container Id** 10514222 **Analysis Id** 0000315907

VE Date 03-MAR-14 21:04:17 **Analysis Status** Pass

Gen-IDC Code BN-508 AMWTP Newly Generated Debris **VE Weight** 116.87 lbs.

Closure Date 03-MAR-14 21:04:17 **Procedure Id** INST-FOI-17 **Net Weight** 90.87 lbs.

Container Type 55 **Revision** 27

Operator 1 MIKE REIDER **Waste Matrix** S5490 **Summary Category Group** S5000

Operator 2 JEFFREY K BAILEY **Equipment ID** VE BiD RPCK

General

Rigid Liner Present? No **Liner Type** NO LINER **Closure Method** No Bags

Liner Punctured? Yes **Layers Of Confinement** 0 **Fill Factor** 75 % **Liner Lid Present** No

Liquids

Liquids Present? No **Comment**

Liquid Between Liner and Drum 0 pints **Other Liquids** 0 pints

Containerized Liquid pints **Total Liquid Amount** 0 pints

Internal Container with Liquid 0 pints

Internal Container with Liquid No

Prohibited Liquids Present No

Containerized Liquid

Contents

Sharp Objects? No **Are Sharp Objects Protected?** Yes

	Value	*Comment*
Prohibited Compressed Gas Present?	No	
Explosives Present?	No	
Pyrophorics Present?	No	
Mercury Present?	No	
PCBs Present?	No	
PCB Mass (lbs)	0	
Wet Cell Batteries Present?	No	
Corrosives,Ignitables or Reactives Present?	No	
Beryllium Contaminates Present?	No	
Hazardous-Only Waste Present?	No	
Is Waste Incompatible with backfill, packaging materials, or shipping container materials?	No	
Sealed Containers Over 4L?	No	

IDC Verification

Is IDC correct? Yes **Recommended IDC** -

IDC Change Reason

Visual Exam Comment Remaining waste by weight percent is cellulosics consisting of wood

Batch Id VEB14-00079 **Container Id** 10514222 **Analysis Id** 0000315907

Source Container

Is there a source container? Yes

Source Container ID	Location	IDC
10033558	destroyed @ 676- BXI/9	MD-824

IDC CODES

Current Container IDC Code: BN-508 **Recommended IDC Code:** -

Waste Material Items

Packaging Materials

Material Item	Quantity	Unit	Unit Wt	Item Wt(lbs)

Waste Items by Weight

Material Item	Quantity	Unit	Unit Wt	Item Wt(lbs)

Waste Items by Volume

Material Item	Quantity	Unit	Unit Wt	Item Wt(lbs)
Rubber	2.000	PINTS	1.554	3.110
Plastic	3.000	PINTS	0.937	2.810

Waste Parameters

Waste Parameter	Remaining Weight %	Actual Weight Lbs
Iron-based Metals/Alloys	0.000	0.000
Aluminum-based Metals/Alloys	0.000	0.000
Other metals	0.000	0.000
Other Inorganic Materials	0.000	0.000
Cellulosics	100.000	84.945
Rubber	0.000	3.110
Plastic (Waste Materials)	0.000	2.810
Inorganic matrix	0.000	0.000
Organic matrix	0.000	0.000
Soils/gravel	0.000	0.000
Steel (packaging materials)	0.000	26.000
Plastic (packaging materials)	0.000	0.000
Cellulosics Packaging	0.000	0.000

Esignature History

Esig Approval Id	User Id	E-signature Date	Comment
2709238	MREIDER	03-MAR-14 21:04:17	
2709239	JBAILEY	03-MAR-14 21:04:19	

VE Boxline and Repackaging Report

Batch Id VEB14-00079 **Container Id** 10514223 **Analysis Id** 0000315908

VE Date 03-MAR-14 21:13:29 **Analysis Status** Pass

Gen-IDC Code BN-508 AMWTP Newly Generated Debris **VE Weight** 132.30 lbs.

Closure Date 03-MAR-14 21:13:29 **Procedure Id** INST-FOI-17 **Net Weight** 106.30 lbs.

Container Type 55 **Revision** 27

Operator 1 MIKE REIDER **Waste Matrix** S5490 **Summary Category Group** S5000

Operator 2 JEFFREY K BAILEY **Equipment ID** VE BiD RPCK

General

Rigid Liner Present? No **Liner Type** NO LINER **Closure Method** No Bags

Liner Punctured? Yes **Layers Of Confinement** 0 **Fill Factor** 75 % **Liner Lid Present** No

Liquids

Liquids Present? No **Comment**

Liquid Between Liner and Drum 0 pints **Other Liquids** 0 pints

Containerized Liquid pints **Total Liquid Amount** 0 pints

Internal Container with Liquid 0 pints

Internal Container with Liquid No

Prohibited Liquids Present No

Containerized Liquid

Contents

Sharp Objects? No **Are Sharp Objects Protected?** Yes

	Value	*Comment*
Prohibited Compressed Gas Present?	No	
Explosives Present?	No	
Pyrophorics Present?	No	
Mercury Present?	No	
PCBs Present?	No	
PCB Mass (lbs)	0	
Wet Cell Batteries Present?	No	
Corrosives,Ignitables or Reactives Present?	No	
Beryllium Contaminates Present?	No	
Hazardous-Only Waste Present?	No	
Is Waste Incompatible with backfill, packaging materials, or shipping container materials?	No	
Sealed Containers Over 4L?	No	

IDC Verification

Is IDC correct? Yes **Recommended IDC** -

IDC Change Reason

Visual Exam Comment Remaining waste by weight percent is cellulosics consisting of wood

Batch Id VEB14-00079 **Container Id** 10514223 **Analysis Id** 0000315908

Source Container

Is there a source container? Yes

Source Container ID	Location	IDC
10033558	destroyed @ 676- BXI/9	MD-824

IDC CODES

Current Container IDC Code: BN-508 **Recommended IDC Code:** -

Waste Material Items

Packaging Materials

Material Item	Quantity	Unit	Unit Wt	Item Wt(lbs)

Waste Items by Weight

Material Item	Quantity	Unit	Unit Wt	Item Wt(lbs)

Waste Items by Volume

Material Item	Quantity	Unit	Unit Wt	Item Wt(lbs)
Rubber	2.000	PINTS	1.554	3.110
Plastic	3.000	PINTS	0.937	2.810

Waste Parameters

Waste Parameter	Remaining Weight %	Actual Weight Lbs
Iron-based Metals/Alloys	0.000	0.000
Aluminum-based Metals/Alloys	0.000	0.000
Other metals	0.000	0.000
Other Inorganic Materials	0.000	0.000
Cellulosics	100.000	100.380
Rubber	0.000	3.110
Plastic (Waste Materials)	0.000	2.810
Inorganic matrix	0.000	0.000
Organic matrix	0.000	0.000
Soils/gravel	0.000	0.000
Steel (packaging materials)	0.000	26.000
Plastic (packaging materials)	0.000	0.000
Cellulosics Packaging	0.000	0.000

Esignature History

Esig Approval Id	User Id	E-signature Date	Comment
2709240	MREIDER	03-MAR-14 21:13:29	
2709241	JBAILEY	03-MAR-14 21:13:31	

Batch Id VEB14-00079 **Container Id** 10514221 **Analysis Id** 0000315912

VE Date 03-MAR-14 21:43:46 **Analysis Status** Pass

Gen-IDC Code BN-508 AMWTP Newly Generated Debris **VE Weight** 116.87 **lbs.**

Closure Date 03-MAR-14 21:43:46 **Procedure Id** INST-FOI-17 **Net Weight** 90.87 **lbs.**

Container Type 55 **Revision** 27

Operator 1 MIKE REIDER **Waste Matrix** S5490 **Summary Category Group** S5000

Operator 2 JEFFREY K BAILEY **Equipment ID** VE BiD RPCK

General

Rigid Liner Present? No **Liner Type** NO LINER **Closure Method** No Bags

Liner Punctured? Yes **Layers Of Confinement** 0 **Fill Factor** 75 % **Liner Lid Present** No

Liquids

Liquids Present? No **Comment**

Liquid Between Liner and Drum 0 pints **Other Liquids** 0 pints

Containerized Liquid pints **Total Liquid Amount** 0 pints

Internal Container with Liquid 0 pints

Internal Container with Liquid No

Prohibited Liquids Present No

Containerized Liquid

Contents

Sharp Objects? No **Are Sharp Objects Protected?** Yes

	Value	*Comment*
Prohibited Compressed Gas Present?	No	
Explosives Present?	No	
Pyrophorics Present?	No	
Mercury Present?	No	
PCBs Present?	No	
PCB Mass (lbs)	0	
Wet Cell Batteries Present?	No	
Corrosives,Ignitables or Reactives Present?	No	
Beryllium Contaminates Present?	No	
Hazardous-Only Waste Present?	No	
Is Waste Incompatible with backfill, packaging materials, or shipping container materials?	No	
Sealed Containers Over 4L?	No	

IDC Verification

Is IDC correct? Yes **Recommended IDC** -

IDC Change Reason

Visual Exam Comment Remaining waste by weight percent is cellulosics consisting of wood

VE Boxline and Repackaging Report

Batch Id VEB14-00079 **Container Id** 10514221 **Analysis Id** 0000315912

Source Container

Is there a source container? Yes

Source Container ID	Location	IDC
10033558	destroyed @ 676- BXI/9	MD-824

IDC CODES

Current Container IDC Code: BN-508 **Recommended IDC Code:** -

Waste Material Items

Packaging Materials

Material Item	Quantity	Unit	Unit Wt	Item Wt(lbs)

Waste Items by Weight

Material Item	Quantity	Unit	Unit Wt	Item Wt(lbs)

Waste Items by Volume

Material Item	Quantity	Unit	Unit Wt	Item Wt(lbs)
Rubber	1.000	PINTS	1.554	1.550
Plastic	4.000	PINTS	0.937	3.750

Waste Parameters

Waste Parameter	Remaining Weight %	Actual Weight Lbs
Iron-based Metals/Alloys	0.000	0.000
Aluminum-based Metals/Alloys	0.000	0.000
Other metals	0.000	0.000
Other Inorganic Materials	0.000	0.000
Cellulosics	100.000	85.565
Rubber	0.000	1.550
Plastic (Waste Materials)	0.000	3.750
Inorganic matrix	0.000	0.000
Organic matrix	0.000	0.000
Soils/gravel	0.000	0.000
Steel (packaging materials)	0.000	26.000
Plastic (packaging materials)	0.000	0.000
Cellulosics Packaging	0.000	0.000

Esignature History

Esig Approval Id	User Id	E-signature Date	Comment
2709261	MREIDER	03-MAR-14 21:43:46	
2709262	JBAILEY	03-MAR-14 21:43:48	

-----End of VE Boxline Report-----

AMWTP
Advanced Mixed Waste Treatment Project

AMWTP

Checklist Report

Date: 26-Sep-2014
Time: 10:48

Batch Id VEB14-00079 **Open Date** 03-MAR-14 **Close Date** 03-MAR-14

Reviewer JAY SIMONSON **Approval Level** Independent Technical Reviewer
Approval Date 05-MAR-14 **Review Iteration** 1

Question Text	Answer	Requirement	Comment
1. Is the QA documentation for the Batch Data Reports complete and includes data reports and QC results? o VE Batch Coversheet o Table of Contents (manual review only) o VE Analysis Reports o Analytical Balance Calibration Check Sheet (Form-1215), if applicable (manual review only) o ITR Checklist (Form-1415, manual review only) o Batch Data Report Supplemental Comment Form (Form-1491, manual review only) o Associated NCRs (referenced in WTS) o Audio/Video Recording References, if applicable	Yes		
2. Are there 20 containers or less in the batch?	Yes		
3. Was each VE Operator qualified at the time of the VE event?	Yes		
4. Was a VE data form completed for each container in the batch?	Yes		
Was the data generated in a technically correct manner using the correct revision of INST-OI-34, Non-facility Visual Examination or INST-FOI-17, Facility Visual Examination Operations, as applicable.	Yes		
6. Was the correct revision of the procedure documented on each analysis report?	Yes		
7. Was the E-signature History review performed?	Yes		
8. Was guidance from VEE documented, as applicable?	N/A		
9. Does every drum reported in the batch have a valid audio/video recording (as applicable)?	N/A		
10. Does the physical form match the waste stream description, waste matrix code and IDC?	Yes		
11. Did the VE event result in an IDC/Waste Matrix Code change? If so, was an NCR initiated?	No		
12. Were the waste material parameters documented correctly?	Yes		
13. Was the presence or absence of prohibited items properly identified? o If prohibited items were identified, were NCRs initiated?	Yes		
14. Has the description of rigid liners and layers of confinement been properly documented?	Yes		
15. Was the drum age criteria (DAC) entered correctly and completely? o Closure Method(s) o Liner Puncture Status o Layers of Confinement o Closure Date o Packaging Configuration o Type and number of filters, as applicable o Liner hole presence and diameter, as applicable	Yes		
16. Have filters been installed or removed from drum as recorded in WTS, as applicable?	N/A		
17. Hand calculations and unit conversions are correct? o Does the packaging weight plus the net weight equal the gross weight of the drum in the estimated waste material parameters, and for the unit conversions that are entered by volume or weight?	Yes		
18. Were all units and significant figures used correct for all reported volumes/weights?	Yes		

Batch Id VEB14-00079 **Open Date** 03-MAR-14 **Close Date** 03-MAR-14

Reviewer JAY SIMONSON **Approval Level** Independent Technical Reviewer

Approval Date 05-MAR-14 **Review Iteration** 1

Question Text	Answer	Requirement	Comment
19. Has the data been reviewed for transcription errors as appropriate?	Yes		
20. Were the Visual Examination QAOs met? o Precision o Accuracy o Completeness o Comparability	Yes		
21. Is each data form signed by qualified VE Operators, as applicable per the appropriate procedure being used?	Yes		
22. Was the audio/video check satisfactory, as applicable?	N/A		
23. Was the scale or balance check weight event satisfactory, as applicable?	N/A		
24. Are the QC weight checks within the tolerance of the scale or balance, as applicable?	N/A		
25. Were any NCRs generated for drums containing prohibited items or any nonconforming conditions that failed to meet DQOs or QAOs? o Include the NCRs as appropriate, in the Batch Data Report.	No		
26. Were the rework requirements clearly identified in WTS or on the BDR?	N/A		No operator rework.

Batch Id VEB14-00079 **Open Date** 03-MAR-14 **Close Date** 03-MAR-14

Reviewer REED WALKER **Approval Level** SPM Data Validation

Approval Date 06-MAR-14 **Review Iteration** 1

Question Text	Answer	Requirement	Comment
(1) Has the batch received a Data Generation Level Independent Technical Review?	Yes	MP-TRUW-8.2, C3-10b(1)	
(2) Are the batch data review checklists complete?	Yes	MP-TRUW-8.2, C3-10b(1)	
(3) When identified, were PCBs, mercury, lead, or other hazardous contaminants consistent with the waste stream AK Summary Report(s) and/or AK documentation?	N/A	MP-TRUW-8.2, C4-3	None were identified.
(4) Are any ignitable, corrosive, or reactive wastes identified?	No	MP-TRUW-8.2, C4-3	
(5) Are the packaging configurations identified on the VE consistent with the waste stream AK Summary Report(s) and/or AK documentation?	Yes	MP-TRUW-8.2, C4-3	
(6) Do the drums in this batch contain typical waste items consistent with waste stream AK Summary Report(s) and/or AK documentation?	Yes	MP-TRUW-8.2, C4-3	
(7) Are the Waste Matrix Codes and physical form descriptions consistent with AK?	Yes	MP-TRUW-8.2, C4-3	
(8) Have all AK discrepancies been resolved and have all AK Resolution checklists been approved? Reference all waste stream AK documentation used in review of this data package.	N/A	MP-TRUW-8.2, C4-3	No discrepancies identified.
(9) Does the batch report identify the correct implementing procedure number and revision number used for this testing method?	Yes	MP-TRUW-8.2, C3-4 and Table C3-11	
(10) Have the Waste Matrix Code (WMC) and IDC for all drums in the batch remained the same as originally assigned by the historical designation? NOTE: If not, note the drum number in the comment field and notify the Acceptable Knowledge Expert (AKE) if an NCR does not exist for the WMC and IDC change.	Yes	MP-TRUW-8.2, C-3c and C1-4	
(11) Does the physical form of the waste match the WMC, waste stream description, and identify the absence of prohibited items?	Yes	MP-TRUW-8.2, C-3c and C1-4	
(12) If observable liquids exist in the drum, is an estimate of quantity given?	N/A	MP-TRUW-8.2, C-3c and C1-4	No liquids identified.
(13) Precision: Have all discrepancies been reconciled between the operator and the ITR with regard to identification of WMC, liquids in excess of TSDF-WAC limits, and compressed gases?	Yes	MP-TRUW-8.2 C3-4b	
(14) Accuracy: Have all operators passed a comprehensive examination and demonstrated satisfactory performance in the presence of the VE expert during initial and subsequent qualifications?	Yes	MP-TRUW-8.2 C3-4b	
(15) Completeness: Has a validated VE data form been obtained for 100% of the waste containers subject to VE?	Yes	MP-TRUW-8.2 C3-4b	
(16) Comparability: Has the comparability of VE data from different operators been enhanced by use of standardized VE procedures and operator qualifications?	Yes	MP-TRUW-8.2 C3-4b	
(17) Does the data for all containers within this batch meet the review, validation, and verification requirements? · Are proper units (e.g. Liters or pounds) and significant figure used? · Is the BDR complete (all pages identified in the BDR and numbered according)? - VE Batch Coversheet - Table of Contents (manual review only) - VE Analysis Reports - Analytical Balance Calibration Checklist (if applicable) - ITR Checklist (Form-1415)	Yes	MP-TRUW-8.2, C3-10b and Table C3-11	

Batch Id VEB14-00079 **Open Date** 03-MAR-14 **Close Date** 03-MAR-14

Reviewer REED WALKER **Approval Level** SPM Data Validation

Approval Date 06-MAR-14 **Review Iteration** 1

Question Text	Answer	Requirement	Comment
- Associated NCRs - Audio/Video Recordings (if applicable)			
(18) Do the drum reports contain the (a) Batch Data Report number and date, (b) waste container number (c)WMC, (d) implementing procedure and revision, (e) audio/video recording reference, (f) audio and video QC checks were performed and satisfactory, (g) verification that the physical form matches the waste stream description and WMC, (h) absence of prohibited items, (i) gross container weight, (j) waste material parameter weights, and (k) signature and date of examination (signatures of both operators when applicable)?	Yes	MP-TRUW-8.2, C1-4 and Table C3-11	
(19) Is the description of container contents detailed enough to provide verification of estimated weights for the waste matrix parameters identified?	Yes	MP-TRUW-8.2, C1-4 and Table C3-11	
(20) Is there a valid second weight check for every 10 items?	N/A	MP-TRUW-8.2, C1-4	Not required for this batch.
(21) Verification of two operator signatures when doing VE?	Yes	MP-TRUW-8.2, C-3d(1) and Table C3-11	
(22) Are there 20 or fewer containers in the batch?	Yes	MP-TRUW-8.2, C1-3 and C3-10	
(23) Review all NCRs (open and closed). Can the batch be approved?	Yes	MP-TRUW-8.2, C3-13	No NCRs.
(24) All data associated with this BDR is acceptable for signature release?	Yes	MP-TRUW-8.2, C3-10b and C3-10b(1)	

Batch Id VEB14-00079 **Open Date** 03-MAR-14 **Close Date** 03-MAR-14

Esignature History

Esig Approval ID	User ID	Esig Date	Approval Level	Comments
2711304	RWALKER	06-MAR-14	SPM	SPM validation complete. Promote batch.
2710787	JSIMONSON	05-MAR-14	ITR	Promoted to SPM.

AMWTP
Advanced Mixed Waste Treatment Project

AMWTP

Non-Conformance Report

Date: 26-Sep-2014

Time: 10:53

*****Batch NCR(s)*****

Batch Type	VEB	Batch ID	VEB14-00079		
Trackwise Number		**Status**		**Opened Date**	**Closed Date**

*****Container NCR(s)*****

Container ID *or related Batch ID*	Trackwise Number	Status	Opened Date	Closed Date

*****End of Non-Conformance Report*****

AMWTP
Advanced Mixed Waste Treatment Project

AMWTP

Scale Check Event Report

Date: 26-Sep-2014

Time: 10:54

Batch Id	VEB14-00079	**Container Id**	10514184
Batch Id	VEB14-00079	**Container Id**	10514223
Batch Id	VEB14-00079	**Container Id**	10514202
Batch Id	VEB14-00079	**Container Id**	10514214
Batch Id	VEB14-00079	**Container Id**	10514201
Batch Id	VEB14-00079	**Container Id**	10514207
Batch Id	VEB14-00079	**Container Id**	10514203
Batch Id	VEB14-00079	**Container Id**	10514209
Batch Id	VEB14-00079	**Container Id**	10514211
Batch Id	VEB14-00079	**Container Id**	10514221
Batch Id	VEB14-00079	**Container Id**	10514131
Batch Id	VEB14-00079	**Container Id**	10514204
Batch Id	VEB14-00079	**Container Id**	10514222
Batch Id	VEB14-00079	**Container Id**	10514213
Batch Id	VEB14-00079	**Container Id**	10514185
Batch Id	VEB14-00079	**Container Id**	10514210
Batch Id	VEB14-00079	**Container Id**	10514215
Batch Id	VEB14-00079	**Container Id**	10514212
Batch Id	VEB14-00079	**Container Id**	10514205
Batch Id	VEB14-00079	**Container Id**	10514231

DIVIDER

PAGE

AMWTP
Advanced Mixed Waste Treatment Project

AMWTP

Batch Report Coversheet

Date: 26-Sep-2014

Time: 11:19

Batch Type VE Boxline
Batch Report No. VEB14-00117
Batch Id VEB14-00117
Open Date 19-APR-14 15:09:19
Close Date 19-APR-14 23:20:56
Batch Status AP
Test Facility Idaho AMWTP
Equipment Id VE BiD RPCK VE Box Repackaging Into Drums

Container Id	IDC	Analysis Id	Date Examined	QC Type	Analysis Status	Operator
10518182	BN-508	0000317040	19-APR-14 15:09:20	Original	P	SHIRLEY PEREZ
10518184	BN-508	0000317042	19-APR-14 15:15:44	Original	P	REX BUSH
10518143	BN-508	0000317044	19-APR-14 15:36:15	Original	P	REX BUSH
10518186	BN-508	0000317045	19-APR-14 15:47:45	Original	P	REX BUSH
10518203	BN-508	0000317046	19-APR-14 16:07:56	Original	P	SHIRLEY PEREZ
10518147	BN-508	0000317050	19-APR-14 16:35:36	Original	P	SHIRLEY PEREZ
10518131	BN-508	0000317052	19-APR-14 16:57:41	Original	P	SHIRLEY PEREZ
10518200	BN-508	0000317053	19-APR-14 16:58:17	Original	P	REX BUSH
10518141	BN-508	0000317054	19-APR-14 17:18:00	Original	P	REX BUSH
10518150	BN-508	0000317056	19-APR-14 17:28:10	Original	P	SHIRLEY PEREZ
10518139	BN-508	0000317060	19-APR-14 19:45:36	Original	P	JEFFREY K BAILEY
10518138	BN-508	0000317061	19-APR-14 19:57:11	Original	P	JEFFREY K BAILEY
10518188	BN-508	0000317062	19-APR-14 20:10:04	Original	P	JEFFREY K BAILEY
10518128	BN-508	0000317063	19-APR-14 20:35:58	Original	P	JEFFREY K BAILEY
10518153	BN-508	0000317064	19-APR-14 21:23:33	Original	P	JEFFREY K BAILEY
10518142	BN-508	0000317070	19-APR-14 21:46:43	Original	P	JEFFREY K BAILEY
10518157	BN-508	0000317072	19-APR-14 22:10:05	Original	P	JEFFREY K BAILEY
10518170	BN-508	0000317075	19-APR-14 22:29:28	Original	P	JEFFREY K BAILEY
10518176	BN-508	0000317076	19-APR-14 22:49:42	Original	P	JEFFREY K BAILEY
10518169	BN-508	0000317077	19-APR-14 23:19:57	Original	P	JEFFREY K BAILEY

INFORMATION ONLY

AMWTP
Advanced Mixed Waste Treatment Project

Batch Report Coversheet

************************Batch Comments************************

Written By	Date	Comment
RGRISE	20-APR-14 10:53:12	Initial validation performed electronically per MP-TRUW-8.8
RGRISE	20-APR-14 10:53:12	Promote batch to SPM level.
NSTYHL	23-APR-14 11:09:54	SPM review complete.
NSTYHL	23-APR-14 11:09:54	Approve batch.

AMWTP
Advanced Mixed Waste Treatment Project

AMWTP

Batch Report Coversheet

Date: 26-Sep-2014

Time: 11:19

**********Batch E-Signature History**********

Approval ID	User ID	Signature Date	Comment
2736747	RGRISE	20-APR-2014 10:53:12	Promote batch to SPM level.
2739886	NSTYHL	23-APR-2014 11:09:54	Approve batch.

***** End of Batch Report Coversheet Report *****

AMWTP

Advanced Mixed Waste Treatment Project

AMWTP

VE Boxline and Repackaging Report

Date: 26-Sep-2014

Time: 11:21

Batch Id VEB14-00117 **Container Id** 10518182 **Analysis Id** 0000317040

VE Date 19-APR-14 15:09:20 **Analysis Status** Pass

Gen-IDC Code BN-508 AMWTP Newly Generated Debris **VE Weight** 90.41 lbs.

Closure Date 19-APR-14 15:09:20 **Procedure Id** INST-FOI-17 **Net Weight** 64.41 lbs.

Container Type 55 **Revision** 27

Operator 1 SHIRLEY PEREZ **Waste Matrix** S5490 **Summary Category Group** S5000

Operator 2 GUY MATLOCK **Equipment ID** VE BiD RPCK

General

Rigid Liner Present? No **Liner Type** NO LINER **Closure Method** No Bags

Liner Punctured? Yes **Layers Of Confinement** 0 **Fill Factor** 50 % **Liner Lid Present** No

Liquids

Liquids Present? No **Comment**

Liquid Between Liner and Drum 0 pints **Other Liquids** 0 pints

Containerized Liquid pints **Total Liquid Amount** 0 pints

Internal Container with Liquid 0 pints

Internal Container with Liquid No

Prohibited Liquids Present No

Containerized Liquid

Contents

Sharp Objects? Yes **Are Sharp Objects Protected?** No

	Value	*Comment*
Prohibited Compressed Gas Present?	No	
Explosives Present?	No	
Pyrophorics Present?	No	
Mercury Present?	No	
PCBs Present?	No	
PCB Mass (lbs)	0	
Wet Cell Batteries Present?	No	
Corrosives,Ignitables or Reactives Present?	No	
Beryllium Contaminates Present?	No	
Hazardous-Only Waste Present?	No	
Is Waste Incompatible with backfill, packaging materials, or shipping container materials?	No	
Sealed Containers Over 4L?	No	

IDC Verification

Is IDC correct? Yes **Recommended IDC** -

IDC Change Reason

Visual Exam Comment The remaining waste by weight percent is Iron Based Metals/Alloys consisting of scrap metal.

VE Boxline and Repackaging Report

Batch Id VEB14-00117 **Container Id** 10518182 **Analysis Id** 0000317040

Source Container

Is there a source container? Yes

Source Container ID	Location	IDC
10510664	destroyed @ 676- BXI/16	RF-760

IDC CODES

Current Container IDC Code: BN-508 **Recommended IDC Code:** -

Waste Material Items

Packaging Materials

Material Item	Quantity	Unit	Unit Wt	Item Wt(lbs)

Waste Items by Weight

Material Item	Quantity	Unit	Unit Wt	Item Wt(lbs)

Waste Items by Volume

Material Item	Quantity	Unit	Unit Wt	Item Wt(lbs)
Paper	2.000	PINTS	0.969	1.940
Plastic	6.000	PINTS	0.937	5.620
Floor Sweepings	2.000	PINTS	1.000	2.000

Waste Parameters

Waste Parameter	Remaining Weight %	Actual Weight Lbs
Iron-based Metals/Alloys	100.000	54.845
Aluminum-based Metals/Alloys	0.000	0.000
Other metals	0.000	0.000
Other Inorganic Materials	0.000	2.000
Cellulosics	0.000	1.940
Rubber	0.000	0.000
Plastic (Waste Materials)	0.000	5.620
Inorganic matrix	0.000	0.000
Organic matrix	0.000	0.000
Soils/gravel	0.000	0.000
Steel (packaging materials)	0.000	26.000
Plastic (packaging materials)	0.000	0.000
Cellulosics Packaging	0.000	0.000
MLLW Waste	0.000	0.000

Esignature History

Esig Approval Id	User Id	E-signature Date	Comment
2736324	SPEREZ	19-APR-14 15:09:20	
2736325	GMATLOCK	19-APR-14 15:09:20	

VE Boxline and Repackaging Report

Batch Id VEB14-00117 **Container Id** 10518184 **Analysis Id** 0000317042

VE Date 19-APR-14 15:15:44 **Analysis Status** Pass

Gen-IDC Code BN-508 AMWTP Newly Generated Debris **VE Weight** 167.58 lbs.

Closure Date 19-APR-14 15:15:44 **Procedure Id** INST-FOI-17 **Net Weight** 141.58 lbs.

Container Type 55 **Revision** 27

Operator 1 REX BUSH **Waste Matrix** S5490 **Summary Category Group** S5000

Operator 2 TIM OZBURN **Equipment ID** VE BiD RPCK

General

Rigid Liner Present? No **Liner Type** NO LINER **Closure Method** No Bags

Liner Punctured? Yes **Layers Of Confinement** 0 **Fill Factor** 60 % **Liner Lid Present** No

Liquids

Liquids Present? No **Comment**

Liquid Between Liner and Drum 0 pints **Other Liquids** 0 pints

Containerized Liquid pints **Total Liquid Amount** 0 pints

Internal Container with Liquid 0 pints

Internal Container with Liquid No

Prohibited Liquids Present No

Containerized Liquid

Contents

Sharp Objects? Yes **Are Sharp Objects Protected?** No

	Value	*Comment*
Prohibited Compressed Gas Present?	No	
Explosives Present?	No	
Pyrophorics Present?	No	
Mercury Present?	No	
PCBs Present?	No	
PCB Mass (lbs)	0	
Wet Cell Batteries Present?	No	
Corrosives,Ignitables or Reactives Present?	No	
Beryllium Contaminates Present?	No	
Hazardous-Only Waste Present?	No	
Is Waste Incompatible with backfill, packaging materials, or shipping container materials?	No	
Sealed Containers Over 4L?	No	

IDC Verification

Is IDC correct? Yes **Recommended IDC** -

IDC Change Reason

Visual Exam Comment The remaining waste by weight percent is iron based metal/alloy consisting of scrap metal.

Batch Id VEB14-00117 **Container Id** 10518184 **Analysis Id** 0000317042

Source Container

Is there a source container? Yes

Source Container ID	Location	IDC
10315932	destroyed @ 676- BXI/16	SD-177

IDC CODES

Current Container IDC Code: BN-508 **Recommended IDC Code:** -

Waste Material Items

Packaging Materials

Material Item	Quantity	Unit	Unit Wt	Item Wt(lbs)

Waste Items by Weight

Material Item	Quantity	Unit	Unit Wt	Item Wt(lbs)

Waste Items by Volume

Material Item	Quantity	Unit	Unit Wt	Item Wt(lbs)
Cured Cement (Other Inorganics)	11.000	PINTS	1.125	12.380
Paper	5.000	PINTS	0.969	4.850
Plastic	1.000	PINTS	0.937	0.940
Floor Sweepings	1.000	PINTS	1.000	1.000

Waste Parameters

Waste Parameter	Remaining Weight %	Actual Weight Lbs
Iron-based Metals/Alloys	100.000	122.410
Aluminum-based Metals/Alloys	0.000	0.000
Other metals	0.000	0.000
Other Inorganic Materials	0.000	13.380
Cellulosics	0.000	4.850
Rubber	0.000	0.000
Plastic (Waste Materials)	0.000	0.940
Inorganic matrix	0.000	0.000
Organic matrix	0.000	0.000
Soils/gravel	0.000	0.000
Steel (packaging materials)	0.000	26.000
Plastic (packaging materials)	0.000	0.000
Cellulosics Packaging	0.000	0.000
MLLW Waste	0.000	0.000

Esignature History

Esig Approval Id	User Id	E-signature Date	Comment
2736326	RBUSH1	19-APR-14 15:15:44	
2736327	TOZBURN	19-APR-14 15:15:46	

Batch Id VEB14-00117 **Container Id** 10518143 **Analysis Id** 0000317044

VE Date 19-APR-14 15:36:15 **Analysis Status** Pass

Gen-IDC Code BN-508 AMWTP Newly Generated Debris **VE Weight** 174.20 lbs.

Closure Date 19-APR-14 15:36:15 **Procedure Id** INST-FOI-17 **Net Weight** 148.20 lbs.

Container Type 55 **Revision** 27

Operator 1 REX BUSH **Waste Matrix** S5490 **Summary Category Group** S5000

Operator 2 TIM OZBURN **Equipment ID** VE BiD RPCK

---General---

Rigid Liner Present? No **Liner Type** NO LINER **Closure Method** No Bags

Liner Punctured? Yes **Layers Of Confinement** 0 **Fill Factor** 60 % **Liner Lid Present** No

---Liquids---

Liquids Present? No **Comment**

Liquid Between Liner and Drum 0 pints **Other Liquids** 0 pints

Containerized Liquid pints **Total Liquid Amount** 0 pints

Internal Container with Liquid 0 pints

Internal Container with Liquid No

Prohibited Liquids Present No

Containerized Liquid

---Contents---

Sharp Objects? Yes **Are Sharp Objects Protected?** No

	Value	*Comment*
Prohibited Compressed Gas Present?	No	
Explosives Present?	No	
Pyrophorics Present?	No	
Mercury Present?	No	
PCBs Present?	No	
PCB Mass (lbs)	0	
Wet Cell Batteries Present?	No	
Corrosives,Ignitables or Reactives Present?	No	
Beryllium Contaminates Present?	No	
Hazardous-Only Waste Present?	No	
Is Waste Incompatible with backfill, packaging materials, or shipping container materials?	No	
Sealed Containers Over 4L?	No	

---IDC Verification---

Is IDC correct? Yes **Recommended IDC** -

IDC Change Reason

Visual Exam Comment The remaining waste by weight percent is iron based metal/alloy consisting of scrap metal.

Batch Id VEB14-00117 **Container Id** 10518143 **Analysis Id** 0000317044

Source Container

Is there a source container? Yes

Source Container ID	Location	IDC
10315932	destroyed @ 676- BXI/16	SD-177

IDC CODES

Current Container IDC Code: BN-508 **Recommended IDC Code:** -

Waste Material Items

Packaging Materials

Material Item	Quantity	Unit	Unit Wt	Item Wt(lbs)

Waste Items by Weight

Material Item	Quantity	Unit	Unit Wt	Item Wt(lbs)

Waste Items by Volume

Material Item	Quantity	Unit	Unit Wt	Item Wt(lbs)
Cured Cement (Other Inorganics)	7.000	PINTS	1.125	7.880
Paper	5.000	PINTS	0.969	4.850
Cardboard	2.000	PINTS	0.833	1.670
Plastic	5.000	PINTS	0.937	4.690
Floor Sweepings	1.000	PINTS	1.000	1.000

Waste Parameters

Waste Parameter	Remaining Weight %	Actual Weight Lbs
Iron-based Metals/Alloys	100.000	128.105
Aluminum-based Metals/Alloys	0.000	0.000
Other metals	0.000	0.000
Other Inorganic Materials	0.000	8.880
Cellulosics	0.000	6.520
Rubber	0.000	0.000
Plastic (Waste Materials)	0.000	4.690
Inorganic matrix	0.000	0.000
Organic matrix	0.000	0.000
Soils/gravel	0.000	0.000
Steel (packaging materials)	0.000	26.000
Plastic (packaging materials)	0.000	0.000
Cellulosics Packaging	0.000	0.000
MLLW Waste	0.000	0.000

Esignature History

Esig Approval Id	User Id	E-signature Date	Comment
2736331	RBUSH1	19-APR-14 15:36:15	
2736332	TOZBURN	19-APR-14 15:36:18	

Batch Id VEB14-00117 **Container Id** 10518186 **Analysis Id** 0000317045

VE Date 19-APR-14 15:47:45 **Analysis Status** Pass

Gen-IDC Code BN-508 AMWTP Newly Generated Debris **VE Weight** 121.28 lbs.

Closure Date 19-APR-14 15:47:45 **Procedure Id** INST-FOI-17 **Net Weight** 95.28 lbs.

Container Type 55 **Revision** 27

Operator 1 REX BUSH **Waste Matrix** S5490 **Summary Category Group** S5000

Operator 2 TIM OZBURN **Equipment ID** VE BiD RPCK

General

Rigid Liner Present? No **Liner Type** NO LINER **Closure Method** No Bags

Liner Punctured? Yes **Layers Of Confinement** 0 **Fill Factor** 62 % **Liner Lid Present** No

Liquids

Liquids Present? No **Comment**

Liquid Between Liner and Drum 0 pints **Other Liquids** 0 pints

Containerized Liquid pints **Total Liquid Amount** 0 pints

Internal Container with Liquid 0 pints

Internal Container with Liquid No

Prohibited Liquids Present No

Containerized Liquid

Contents

Sharp Objects? Yes **Are Sharp Objects Protected?** No

	Value	*Comment*
Prohibited Compressed Gas Present?	No	
Explosives Present?	No	
Pyrophorics Present?	No	
Mercury Present?	No	
PCBs Present?	No	
PCB Mass (lbs)	0	
Wet Cell Batteries Present?	No	
Corrosives,Ignitables or Reactives Present?	No	
Beryllium Contaminates Present?	No	
Hazardous-Only Waste Present?	No	
Is Waste Incompatible with backfill, packaging materials, or shipping container materials?	No	
Sealed Containers Over 4L?	No	

IDC Verification

Is IDC correct? Yes **Recommended IDC** -

IDC Change Reason

Visual Exam Comment The remaining waste by weight percent is iron based metal/alloy consisting of scrap metal.

Batch Id VEB14-00117 **Container Id** 10518186 **Analysis Id** 0000317045

Source Container

Is there a source container? Yes

Source Container ID	Location	IDC
10315932	destroyed @ 676- BXI/16	SD-177

IDC CODES

Current Container IDC Code: BN-508 **Recommended IDC Code:** -

Waste Material Items

Packaging Materials

Material Item	Quantity	Unit	Unit Wt	Item Wt(lbs)

Waste Items by Weight

Material Item	Quantity	Unit	Unit Wt	Item Wt(lbs)

Waste Items by Volume

Material Item	Quantity	Unit	Unit Wt	Item Wt(lbs)
Cured Cement (Other Inorganics)	5.000	PINTS	1.125	5.630
Paper	2.000	PINTS	0.969	1.940
Plastic	2.000	PINTS	0.937	1.870
Floor Sweepings	1.000	PINTS	1.000	1.000

Waste Parameters

Waste Parameter	Remaining Weight %	Actual Weight Lbs
Iron-based Metals/Alloys	100.000	84.835
Aluminum-based Metals/Alloys	0.000	0.000
Other metals	0.000	0.000
Other Inorganic Materials	0.000	6.630
Cellulosics	0.000	1.940
Rubber	0.000	0.000
Plastic (Waste Materials)	0.000	1.870
Inorganic matrix	0.000	0.000
Organic matrix	0.000	0.000
Soils/gravel	0.000	0.000
Steel (packaging materials)	0.000	26.000
Plastic (packaging materials)	0.000	0.000
Cellulosics Packaging	0.000	0.000
MLLW Waste	0.000	0.000

Esignature History

Esig Approval Id	User Id	E-signature Date	Comment
2736334	RBUSH1	19-APR-14 15:47:45	
2736335	TOZBURN	19-APR-14 15:47:47	

Batch Id VEB14-00117 **Container Id** 10518203 **Analysis Id** 0000317046

VE Date 19-APR-14 16:07:56 **Analysis Status** Pass

Gen-IDC Code BN-508 AMWTP Newly Generated Debris **VE Weight** 127.89 **lbs.**

Closure Date 19-APR-14 16:07:56 **Procedure Id** INST-FOI-17 **Net Weight** 101.89 **lbs.**

Container Type 55 **Revision** 27

Operator 1 SHIRLEY PEREZ **Waste Matrix** S5490 **Summary Category Group** S5000

Operator 2 GUY MATLOCK **Equipment ID** VE BiD RPCK

General

Rigid Liner Present? No **Liner Type** NO LINER **Closure Method** No Bags

Liner Punctured? Yes **Layers Of Confinement** 0 **Fill Factor** 50 % **Liner Lid Present** No

Liquids

Liquids Present? No **Comment**

Liquid Between Liner and Drum 0 pints **Other Liquids** 0 pints

Containerized Liquid pints **Total Liquid Amount** 0 pints

Internal Container with Liquid 0 pints

Internal Container with Liquid No

Prohibited Liquids Present No

Containerized Liquid

Contents

Sharp Objects? Yes **Are Sharp Objects Protected?** No

	Value	*Comment*
Prohibited Compressed Gas Present?	No	
Explosives Present?	No	
Pyrophorics Present?	No	
Mercury Present?	No	
PCBs Present?	No	
PCB Mass (lbs)	0	
Wet Cell Batteries Present?	No	
Corrosives,Ignitables or Reactives Present?	No	
Beryllium Contaminates Present?	No	
Hazardous-Only Waste Present?	No	
Is Waste Incompatible with backfill, packaging materials, or shipping container materials?	No	
Sealed Containers Over 4L?	No	

IDC Verification

Is IDC correct? Yes **Recommended IDC** -

IDC Change Reason

Visual Exam Comment The remaining waste by weight percent is Iron Based Metals/Alloys consisting of scrap metal.

VE Boxline and Repackaging Report

Batch Id VEB14-00117 **Container Id** 10518203 **Analysis Id** 0000317046

Source Container

Is there a source container? Yes

Source Container ID	Location	IDC
10510664	destroyed @ 676- BXI/16	RF-760

IDC CODES

Current Container IDC Code: BN-508 **Recommended IDC Code:** -

Waste Material Items

Packaging Materials

Material Item	Quantity	Unit	Unit Wt	Item Wt(lbs)

Waste Items by Weight

Material Item	Quantity	Unit	Unit Wt	Item Wt(lbs)

Waste Items by Volume

Material Item	Quantity	Unit	Unit Wt	Item Wt(lbs)
Paper	2.000	PINTS	0.969	1.940
Cardboard	5.000	PINTS	0.833	4.170
Plastic	6.000	PINTS	0.937	5.620
Floor Sweepings	2.000	PINTS	1.000	2.000
Cloth Material	2.000	PINTS	2.000	4.000

Waste Parameters

Waste Parameter	Remaining Weight %	Actual Weight Lbs
Iron-based Metals/Alloys	100.000	84.160
Aluminum-based Metals/Alloys	0.000	0.000
Other metals	0.000	0.000
Other Inorganic Materials	0.000	2.000
Cellulosics	0.000	10.110
Rubber	0.000	0.000
Plastic (Waste Materials)	0.000	5.620
Inorganic matrix	0.000	0.000
Organic matrix	0.000	0.000
Soils/gravel	0.000	0.000
Steel (packaging materials)	0.000	26.000
Plastic (packaging materials)	0.000	0.000
Cellulosics Packaging	0.000	0.000
MLLW Waste	0.000	0.000

Esignature History

Esig Approval Id	User Id	E-signature Date	Comment
2736355	SPEREZ	19-APR-14 16:07:56	
2736356	GMATLOCK	19-APR-14 16:07:59	

VE Boxline and Repackaging Report

Batch Id VEB14-00117 **Container Id** 10518147 **Analysis Id** 0000317050

VE Date 19-APR-14 16:35:36 **Analysis Status** Pass

Gen-IDC Code BN-508 AMWTP Newly Generated Debris **VE Weight** 132.30 lbs.

Closure Date 19-APR-14 16:35:36 **Procedure Id** INST-FOI-17 **Net Weight** 106.30 lbs.

Container Type 55 **Revision** 27

Operator 1 SHIRLEY PEREZ **Waste Matrix** S5490 **Summary Category Group** S5000

Operator 2 GUY MATLOCK **Equipment ID** VE BiD RPCK

General

Rigid Liner Present? No **Liner Type** NO LINER **Closure Method** No Bags

Liner Punctured? Yes **Layers Of Confinement** 0 **Fill Factor** 45 % **Liner Lid Present** No

Liquids

Liquids Present? No **Comment**

Liquid Between Liner and Drum 0 pints **Other Liquids** 0 pints

Containerized Liquid pints **Total Liquid Amount** 0 pints

Internal Container with Liquid 0 pints

Internal Container with Liquid No

Prohibited Liquids Present No

Containerized Liquid

Contents

Sharp Objects? Yes **Are Sharp Objects Protected?** No

	Value	*Comment*
Prohibited Compressed Gas Present?	No	
Explosives Present?	No	
Pyrophorics Present?	No	
Mercury Present?	No	
PCBs Present?	No	
PCB Mass (lbs)	0	
Wet Cell Batteries Present?	No	
Corrosives,Ignitables or Reactives Present?	No	
Beryllium Contaminates Present?	No	
Hazardous-Only Waste Present?	No	
Is Waste Incompatible with backfill, packaging materials, or shipping container materials?	No	
Sealed Containers Over 4L?	No	

IDC Verification

Is IDC correct? Yes **Recommended IDC** -

IDC Change Reason

Visual Exam Comment The remaining waste by weight percent is Iron Based Metals/Alloys consisting of scrap metal.

VE Boxline and Repackaging Report

Batch Id VEB14-00117 **Container Id** 10518147 **Analysis Id** 0000317050

Source Container

Is there a source container? Yes

Source Container ID	Location	IDC
10510664	destroyed @ 676- BXI/16	RF-760

IDC CODES

Current Container IDC Code: BN-508 **Recommended IDC Code:** -

Waste Material Items

Packaging Materials

Material Item	Quantity	Unit	Unit Wt	Item Wt(lbs)

Waste Items by Weight

Material Item	Quantity	Unit	Unit Wt	Item Wt(lbs)

Waste Items by Volume

Material Item	Quantity	Unit	Unit Wt	Item Wt(lbs)
Paper	2.000	PINTS	0.969	1.940
Plastic	6.000	PINTS	0.937	5.620

Waste Parameters

Waste Parameter	Remaining Weight %	Actual Weight Lbs
Iron-based Metals/Alloys	100.000	98.740
Aluminum-based Metals/Alloys	0.000	0.000
Other metals	0.000	0.000
Other Inorganic Materials	0.000	0.000
Cellulosics	0.000	1.940
Rubber	0.000	0.000
Plastic (Waste Materials)	0.000	5.620
Inorganic matrix	0.000	0.000
Organic matrix	0.000	0.000
Soils/gravel	0.000	0.000
Steel (packaging materials)	0.000	26.000
Plastic (packaging materials)	0.000	0.000
Cellulosics Packaging	0.000	0.000
MLLW Waste	0.000	0.000

Esignature History

Esig Approval Id	User Id	E-signature Date	Comment
2736376	SPEREZ	19-APR-14 16:35:36	
2736377	GMATLOCK	19-APR-14 16:35:39	

Batch Id VEB14-00117 **Container Id** 10518131 **Analysis Id** 0000317052

VE Date 19-APR-14 16:57:41 **Analysis Status** Pass

Gen-IDC Code BN-508 AMWTP Newly Generated Debris **VE Weight** 141.12 lbs.

Closure Date 19-APR-14 16:57:41 **Procedure Id** INST-FOI-17 **Net Weight** 115.12 lbs.

Container Type 55 **Revision** 27

Operator 1 SHIRLEY PEREZ **Waste Matrix** S5490 **Summary Category Group** S5000

Operator 2 GUY MATLOCK **Equipment ID** VE BiD RPCK

General

Rigid Liner Present? No **Liner Type** NO LINER **Closure Method** No Bags

Liner Punctured? Yes **Layers Of Confinement** 0 **Fill Factor** 50 % **Liner Lid Present** No

Liquids

Liquids Present? No **Comment**

Liquid Between Liner and Drum 0 pints **Other Liquids** 0 pints

Containerized Liquid pints **Total Liquid Amount** 0 pints

Internal Container with Liquid 0 pints

Internal Container with Liquid No

Prohibited Liquids Present No

Containerized Liquid

Contents

Sharp Objects? Yes **Are Sharp Objects Protected?** No

	Value	*Comment*
Prohibited Compressed Gas Present?	No	
Explosives Present?	No	
Pyrophorics Present?	No	
Mercury Present?	No	
PCBs Present?	No	
PCB Mass (lbs)	0	
Wet Cell Batteries Present?	No	
Corrosives,Ignitables or Reactives Present?	No	
Beryllium Contaminates Present?	No	
Hazardous-Only Waste Present?	No	
Is Waste Incompatible with backfill, packaging materials, or shipping container materials?	No	
Sealed Containers Over 4L?	No	

IDC Verification

Is IDC correct? Yes **Recommended IDC** -

IDC Change Reason

Visual Exam Comment The remaining waste by weight percent is Iron Based Metals/Alloys consisting of scrap metal.

Batch Id VEB14-00117 **Container Id** 10518131 **Analysis Id** 0000317052

Source Container

Is there a source container? Yes

Source Container ID	Location	IDC
10510664	destroyed @ 676- BXI/16	RF-760

IDC CODES

Current Container IDC Code: BN-508 **Recommended IDC Code:** -

Waste Material Items

Packaging Materials

Material Item	Quantity	Unit	Unit Wt	Item Wt(lbs)

Waste Items by Weight

Material Item	Quantity	Unit	Unit Wt	Item Wt(lbs)

Waste Items by Volume

Material Item	Quantity	Unit	Unit Wt	Item Wt(lbs)
Paper	2.000	PINTS	0.969	1.940
Cardboard	3.000	PINTS	0.833	2.500
Plastic	4.000	PINTS	0.937	3.750

Waste Parameters

Waste Parameter	Remaining Weight %	Actual Weight Lbs
Iron-based Metals/Alloys	100.000	106.930
Aluminum-based Metals/Alloys	0.000	0.000
Other metals	0.000	0.000
Other Inorganic Materials	0.000	0.000
Cellulosics	0.000	4.440
Rubber	0.000	0.000
Plastic (Waste Materials)	0.000	3.750
Inorganic matrix	0.000	0.000
Organic matrix	0.000	0.000
Soils/gravel	0.000	0.000
Steel (packaging materials)	0.000	26.000
Plastic (packaging materials)	0.000	0.000
Cellulosics Packaging	0.000	0.000
MLLW Waste	0.000	0.000

Esignature History

Esig Approval Id	User Id	E-signature Date	Comment
2736398	SPEREZ	19-APR-14 16:57:42	
2736399	GMATLOCK	19-APR-14 16:57:43	

Batch Id VEB14-00117 **Container Id** 10518200 **Analysis Id** 0000317053

VE Date 19-APR-14 16:58:17 **Analysis Status** Pass

Gen-IDC Code BN-508 AMWTP Newly Generated Debris **VE Weight** 163.17 lbs.

Closure Date 19-APR-14 16:58:17 **Procedure Id** INST-FOI-17 **Net Weight** 137.17 lbs.

Container Type 55 **Revision** 27

Operator 1 REX BUSH **Waste Matrix** S5490 **Summary Category Group** S5000

Operator 2 TIM OZBURN **Equipment ID** VE BiD RPCK

General

Rigid Liner Present? No **Liner Type** NO LINER **Closure Method** No Bags

Liner Punctured? Yes **Layers Of Confinement** 0 **Fill Factor** 65 % **Liner Lid Present** No

Liquids

Liquids Present? No **Comment**

Liquid Between Liner and Drum 0 pints **Other Liquids** 0 pints

Containerized Liquid pints **Total Liquid Amount** 0 pints

Internal Container with Liquid 0 pints

Internal Container with Liquid No

Prohibited Liquids Present No

Containerized Liquid

Contents

Sharp Objects? Yes **Are Sharp Objects Protected?** No

	Value	*Comment*
Prohibited Compressed Gas Present?	No	
Explosives Present?	No	
Pyrophorics Present?	No	
Mercury Present?	No	
PCBs Present?	No	
PCB Mass (lbs)	0	
Wet Cell Batteries Present?	No	
Corrosives,Ignitables or Reactives Present?	No	
Beryllium Contaminates Present?	No	
Hazardous-Only Waste Present?	No	
Is Waste Incompatible with backfill, packaging materials, or shipping container materials?	No	
Sealed Containers Over 4L?	No	

IDC Verification

Is IDC correct? Yes **Recommended IDC** -

IDC Change Reason

Visual Exam Comment Remaining waste by weight percent is Iron Based Metals/Alloys consisting of misc. scrap metal.

Batch Id VEB14-00117 **Container Id** 10518200 **Analysis Id** 0000317053

---Source Container---

Is there a source container? Yes

Source Container ID	Location	IDC
10315932	destroyed @ 676- BXI/16	SD-177

---IDC CODES---

Current Container IDC Code: BN-508 **Recommended IDC Code:** -

--- Waste Material Items---

---Packaging Materials---

Material Item	Quantity	Unit	Unit Wt	Item Wt(lbs)

---Waste Items by Weight---

Material Item	Quantity	Unit	Unit Wt	Item Wt(lbs)

---Waste Items by Volume---

Material Item	Quantity	Unit	Unit Wt	Item Wt(lbs)
Cured Cement (Other Inorganics)	3.000	PINTS	1.125	3.380
Paper	4.000	PINTS	0.969	3.880
Rubber	1.000	PINTS	1.554	1.550
Plastic	4.000	PINTS	0.937	3.750
Floor Sweepings	1.000	PINTS	1.000	1.000

---Waste Parameters---

Waste Parameter	Remaining Weight %	Actual Weight Lbs
Iron-based Metals/Alloys	100.000	123.610
Aluminum-based Metals/Alloys	0.000	0.000
Other metals	0.000	0.000
Other Inorganic Materials	0.000	4.380
Cellulosics	0.000	3.880
Rubber	0.000	1.550
Plastic (Waste Materials)	0.000	3.750
Inorganic matrix	0.000	0.000
Organic matrix	0.000	0.000
Soils/gravel	0.000	0.000
Steel (packaging materials)	0.000	26.000
Plastic (packaging materials)	0.000	0.000
Cellulosics Packaging	0.000	0.000
MLLW Waste	0.000	0.000

---Esignature History---

Esig Approval Id	User Id	E-signature Date	Comment
2736401	RBUSH1	19-APR-14 16:58:17	
2736402	TOZBURN	19-APR-14 16:58:17	

Batch Id VEB14-00117 **Container Id** 10518141 **Analysis Id** 0000317054

VE Date 19-APR-14 17:18:00 **Analysis Status** Pass

Gen-IDC Code BN-508 AMWTP Newly Generated Debris **VE Weight** 229.32 lbs.

Closure Date 19-APR-14 17:18:00 **Procedure Id** INST-FOI-17 **Net Weight** 203.32 lbs.

Container Type 55 **Revision** 27

Operator 1 REX BUSH **Waste Matrix** S5490 **Summary Category Group** S5000

Operator 2 TIM OZBURN **Equipment ID** VE BiD RPCK

---General---

Rigid Liner Present? No **Liner Type** NO LINER **Closure Method** No Bags

Liner Punctured? Yes **Layers Of Confinement** 0 **Fill Factor** 58 % **Liner Lid Present** No

---Liquids---

Liquids Present? No **Comment**

Liquid Between Liner and Drum 0 pints **Other Liquids** 0 pints

Containerized Liquid pints **Total Liquid Amount** 0 pints

Internal Container with Liquid 0 pints

Internal Container with Liquid No

Prohibited Liquids Present No

Containerized Liquid

---Contents---

Sharp Objects? Yes **Are Sharp Objects Protected?** No

	Value	*Comment*
Prohibited Compressed Gas Present?	No	
Explosives Present?	No	
Pyrophorics Present?	No	
Mercury Present?	No	
PCBs Present?	No	
PCB Mass (lbs)	0	
Wet Cell Batteries Present?	No	
Corrosives,Ignitables or Reactives Present?	No	
Beryllium Contaminates Present?	No	
Hazardous-Only Waste Present?	No	
Is Waste Incompatible with backfill, packaging materials, or shipping container materials?	No	
Sealed Containers Over 4L?	No	

---IDC Verification---

Is IDC correct? Yes **Recommended IDC** -

IDC Change Reason

Visual Exam Comment Remaining waste by weight percent is Cellullosics consisting of cardboard, paper rags..

Batch Id VEB14-00117 **Container Id** 10518141 **Analysis Id** 0000317054

Source Container

Is there a source container? Yes

Source Container ID	Location	IDC
10315932	destroyed @ 676- BXI/16	SD-177

IDC CODES

Current Container IDC Code: BN-508 **Recommended IDC Code:** -

Waste Material Items

Packaging Materials

Material Item	Quantity	Unit	Unit Wt	Item Wt(lbs)

Waste Items by Weight

Material Item	Quantity	Unit	Unit Wt	Item Wt(lbs)

Waste Items by Volume

Material Item	Quantity	Unit	Unit Wt	Item Wt(lbs)
Cured Cement (Other Inorganics)	3.000	PINTS	1.125	3.380
Rubber	1.000	PINTS	1.554	1.550
Iron	0.200	PINTS	7.807	1.560
Plastic	2.000	PINTS	0.937	1.870
Floor Sweepings	3.000	PINTS	1.000	3.000

Waste Parameters

Waste Parameter	Remaining Weight %	Actual Weight Lbs
Iron-based Metals/Alloys	0.000	1.560
Aluminum-based Metals/Alloys	0.000	0.000
Other metals	0.000	0.000
Other Inorganic Materials	0.000	6.380
Cellulosics	100.000	191.960
Rubber	0.000	1.550
Plastic (Waste Materials)	0.000	1.870
Inorganic matrix	0.000	0.000
Organic matrix	0.000	0.000
Soils/gravel	0.000	0.000
Steel (packaging materials)	0.000	26.000
Plastic (packaging materials)	0.000	0.000
Cellulosics Packaging	0.000	0.000
MLLW Waste	0.000	0.000

Esignature History

Esig Approval Id	User Id	E-signature Date	Comment
2736439	RBUSH1	19-APR-14 17:18:01	
2736440	TOZBURN	19-APR-14 17:18:03	

Batch Id VEB14-00117 **Container Id** 10518150 **Analysis Id** 0000317056

VE Date 19-APR-14 17:28:10 **Analysis Status** Pass

Gen-IDC Code BN-508 AMWTP Newly Generated Debris **VE Weight** 138.92 lbs.

Closure Date 19-APR-14 17:28:10 **Procedure Id** INST-FOI-17 **Net Weight** 112.92 lbs.

Container Type 55 **Revision** 27

Operator 1 SHIRLEY PEREZ **Waste Matrix** S5490 **Summary Category Group** S5000

Operator 2 GUY MATLOCK **Equipment ID** VE BiD RPCK

General

Rigid Liner Present? No **Liner Type** NO LINER **Closure Method** No Bags

Liner Punctured? Yes **Layers Of Confinement** 0 **Fill Factor** 45 % **Liner Lid Present** No

Liquids

Liquids Present? No **Comment**

Liquid Between Liner and Drum 0 pints **Other Liquids** 0 pints

Containerized Liquid pints **Total Liquid Amount** 0 pints

Internal Container with Liquid 0 pints

Internal Container with Liquid No

Prohibited Liquids Present No

Containerized Liquid

Contents

Sharp Objects? Yes **Are Sharp Objects Protected?** No

	Value	*Comment*
Prohibited Compressed Gas Present?	No	
Explosives Present?	No	
Pyrophorics Present?	No	
Mercury Present?	No	
PCBs Present?	No	
PCB Mass (lbs)	0	
Wet Cell Batteries Present?	No	
Corrosives,Ignitables or Reactives Present?	No	
Beryllium Contaminates Present?	No	
Hazardous-Only Waste Present?	No	
Is Waste Incompatible with backfill, packaging materials, or shipping container materials?	No	
Sealed Containers Over 4L?	No	

IDC Verification

Is IDC correct? Yes **Recommended IDC** -

IDC Change Reason

Visual Exam Comment The remaining waste by weight percent is Iron Based Metals/Alloys consisting of scrap metal.

Batch Id VEB14-00117 **Container Id** 10518150 **Analysis Id** 0000317056

Source Container

Is there a source container? Yes

Source Container ID	Location	IDC
10510664	destroyed @ 676- BXI/16	RF-760

IDC CODES

Current Container IDC Code: BN-508 **Recommended IDC Code:** -

Waste Material Items

Packaging Materials

Material Item	Quantity	Unit	Unit Wt	Item Wt(lbs)

Waste Items by Weight

Material Item	Quantity	Unit	Unit Wt	Item Wt(lbs)

Waste Items by Volume

Material Item	Quantity	Unit	Unit Wt	Item Wt(lbs)
Paper	1.000	PINTS	0.969	0.970
Plastic	2.000	PINTS	0.937	1.870

Waste Parameters

Waste Parameter	Remaining Weight %	Actual Weight Lbs
Iron-based Metals/Alloys	100.000	110.075
Aluminum-based Metals/Alloys	0.000	0.000
Other metals	0.000	0.000
Other Inorganic Materials	0.000	0.000
Cellulosics	0.000	0.970
Rubber	0.000	0.000
Plastic (Waste Materials)	0.000	1.870
Inorganic matrix	0.000	0.000
Organic matrix	0.000	0.000
Soils/gravel	0.000	0.000
Steel (packaging materials)	0.000	26.000
Plastic (packaging materials)	0.000	0.000
Cellulosics Packaging	0.000	0.000
MLLW Waste	0.000	0.000

Esignature History

Esig Approval Id	User Id	E-signature Date	Comment
2736448	SPEREZ	19-APR-14 17:28:10	
2736449	GMATLOCK	19-APR-14 17:28:12	

Batch Id VEB14-00117 **Container Id** 10518139 **Analysis Id** 0000317060

VE Date 19-APR-14 19:45:36 **Analysis Status** Pass

Gen-IDC Code BN-508 AMWTP Newly Generated Debris **VE Weight** 114.66 lbs.

Closure Date 19-APR-14 19:45:36 **Procedure Id** INST-FOI-17 **Net Weight** 88.66 lbs.

Container Type 55 **Revision** 27

Operator 1 JEFFREY K BAILEY **Waste Matrix** S5490 **Summary Category Group** S5000

Operator 2 MIKE REIDER **Equipment ID** VE BiD RPCK

General

Rigid Liner Present? No **Liner Type** NO LINER **Closure Method** No Bags

Liner Punctured? Yes **Layers Of Confinement** 0 **Fill Factor** 70 % **Liner Lid Present** No

Liquids

Liquids Present? No **Comment**

Liquid Between Liner and Drum 0 pints **Other Liquids** 0 pints

Containerized Liquid pints **Total Liquid Amount** 0 pints

Internal Container with Liquid 0 pints

Internal Container with Liquid No

Prohibited Liquids Present No

Containerized Liquid

Contents

Sharp Objects? Yes **Are Sharp Objects Protected?** No

	Value	*Comment*
Prohibited Compressed Gas Present?	No	
Explosives Present?	No	
Pyrophorics Present?	No	
Mercury Present?	No	
PCBs Present?	No	
PCB Mass (lbs)	0	
Wet Cell Batteries Present?	No	
Corrosives,Ignitables or Reactives Present?	No	
Beryllium Contaminates Present?	No	
Hazardous-Only Waste Present?	No	
Is Waste Incompatible with backfill, packaging materials, or shipping container materials?	No	
Sealed Containers Over 4L?	No	

IDC Verification

Is IDC correct? Yes **Recommended IDC** -

IDC Change Reason

Visual Exam Comment The remaining waste by weight percent is iron based metal alloys consisting of misc. scrap metal.

VE Boxline and Repackaging Report

Batch Id VEB14-00117 **Container Id** 10518139 **Analysis Id** 0000317060

Source Container

Is there a source container? Yes

Source Container ID	Location	IDC
10510664	destroyed @ 676- BXI/16	RF-760

IDC CODES

Current Container IDC Code: BN-508 **Recommended IDC Code:** -

Waste Material Items

Packaging Materials

Material Item	Quantity	Unit	Unit Wt	Item Wt(lbs)

Waste Items by Weight

Material Item	Quantity	Unit	Unit Wt	Item Wt(lbs)

Waste Items by Volume

Material Item	Quantity	Unit	Unit Wt	Item Wt(lbs)
Plastic	2.000	PINTS	0.937	1.870

Waste Parameters

Waste Parameter	Remaining Weight %	Actual Weight Lbs
Iron-based Metals/Alloys	100.000	86.790
Aluminum-based Metals/Alloys	0.000	0.000
Other metals	0.000	0.000
Other Inorganic Materials	0.000	0.000
Cellulosics	0.000	0.000
Rubber	0.000	0.000
Plastic (Waste Materials)	0.000	1.870
Inorganic matrix	0.000	0.000
Organic matrix	0.000	0.000
Soils/gravel	0.000	0.000
Steel (packaging materials)	0.000	26.000
Plastic (packaging materials)	0.000	0.000
Cellulosics Packaging	0.000	0.000
MLLW Waste	0.000	0.000

Esignature History

Esig Approval Id	User Id	E-signature Date	Comment
2736498	JBAILEY	19-APR-14 19:45:36	
2736499	MREIDER	19-APR-14 19:45:38	

Batch Id VEB14-00117 **Container Id** 10518138 **Analysis Id** 0000317061

VE Date 19-APR-14 19:57:11 **Analysis Status** Pass

Gen-IDC Code BN-508 AMWTP Newly Generated Debris **VE Weight** 121.28 lbs.

Closure Date 19-APR-14 19:57:11 **Procedure Id** INST-FOI-17 **Net Weight** 95.28 lbs.

Container Type 55 **Revision** 27

Operator 1 JEFFREY K BAILEY **Waste Matrix** S5490 **Summary Category Group** S5000

Operator 2 MIKE REIDER **Equipment ID** VE BiD RPCK

General

Rigid Liner Present? No **Liner Type** NO LINER **Closure Method** No Bags

Liner Punctured? Yes **Layers Of Confinement** 0 **Fill Factor** 70 % **Liner Lid Present** No

Liquids

Liquids Present? No **Comment**

Liquid Between Liner and Drum 0 pints **Other Liquids** 0 pints

Containerized Liquid pints **Total Liquid Amount** 0 pints

Internal Container with Liquid 0 pints

Internal Container with Liquid No

Prohibited Liquids Present No

Containerized Liquid

Contents

Sharp Objects? Yes **Are Sharp Objects Protected?** No

	Value	*Comment*
Prohibited Compressed Gas Present?	No	
Explosives Present?	No	
Pyrophorics Present?	No	
Mercury Present?	No	
PCBs Present?	No	
PCB Mass (lbs)	0	
Wet Cell Batteries Present?	No	
Corrosives,Ignitables or Reactives Present?	No	
Beryllium Contaminates Present?	No	
Hazardous-Only Waste Present?	No	
Is Waste Incompatible with backfill, packaging materials, or shipping container materials?	No	
Sealed Containers Over 4L?	No	

IDC Verification

Is IDC correct? Yes **Recommended IDC** -

IDC Change Reason

Visual Exam Comment The remaining waste by weight percent is iron based metal alloys consisting of misc. scrap metal.

VE Boxline and Repackaging Report

Batch Id VEB14-00117 **Container Id** 10518138 **Analysis Id** 0000317061

Source Container

Is there a source container? Yes

Source Container ID	Location	IDC
10510664	destroyed @ 676- BXI/16	RF-760

IDC CODES

Current Container IDC Code: BN-508 **Recommended IDC Code:** -

Waste Material Items

Packaging Materials

Material Item	Quantity	Unit	Unit Wt	Item Wt(lbs)

Waste Items by Weight

Material Item	Quantity	Unit	Unit Wt	Item Wt(lbs)

Waste Items by Volume

Material Item	Quantity	Unit	Unit Wt	Item Wt(lbs)
Plastic	1.000	PINTS	0.937	0.940

Waste Parameters

Waste Parameter	Remaining Weight %	Actual Weight Lbs
Iron-based Metals/Alloys	100.000	94.335
Aluminum-based Metals/Alloys	0.000	0.000
Other metals	0.000	0.000
Other Inorganic Materials	0.000	0.000
Cellulosics	0.000	0.000
Rubber	0.000	0.000
Plastic (Waste Materials)	0.000	0.940
Inorganic matrix	0.000	0.000
Organic matrix	0.000	0.000
Soils/gravel	0.000	0.000
Steel (packaging materials)	0.000	26.000
Plastic (packaging materials)	0.000	0.000
Cellulosics Packaging	0.000	0.000
MLLW Waste	0.000	0.000

Esignature History

Esig Approval Id	User Id	E-signature Date	Comment
2736500	JBAILEY	19-APR-14 19:57:11	
2736501	MREIDER	19-APR-14 19:57:13	

Batch Id VEB14-00117 **Container Id** 10518188 **Analysis Id** 0000317062

VE Date 19-APR-14 20:10:04 **Analysis Status** Pass

Gen-IDC Code BN-508 AMWTP Newly Generated Debris **VE Weight** 88.20 **lbs.**

Closure Date 19-APR-14 20:10:04 **Procedure Id** INST-FOI-17 **Net Weight** 62.20 **lbs.**

Container Type 55 **Revision** 27

Operator 1 JEFFREY K BAILEY **Waste Matrix** S5490 **Summary Category Group** S5000

Operator 2 MIKE REIDER **Equipment ID** VE BiD RPCK

General

Rigid Liner Present? No **Liner Type** NO LINER **Closure Method** No Bags

Liner Punctured? Yes **Layers Of Confinement** 0 **Fill Factor** 75 % **Liner Lid Present** No

Liquids

Liquids Present? No **Comment**

Liquid Between Liner and Drum 0 pints **Other Liquids** 0 pints

Containerized Liquid pints **Total Liquid Amount** 0 pints

Internal Container with Liquid 0 pints

Internal Container with Liquid No

Prohibited Liquids Present No

Containerized Liquid

Contents

Sharp Objects? No **Are Sharp Objects Protected?** Yes

	Value	*Comment*
Prohibited Compressed Gas Present?	No	
Explosives Present?	No	
Pyrophorics Present?	No	
Mercury Present?	No	
PCBs Present?	No	
PCB Mass (lbs)	0	
Wet Cell Batteries Present?	No	
Corrosives,Ignitables or Reactives Present?	No	
Beryllium Contaminates Present?	No	
Hazardous-Only Waste Present?	No	
Is Waste Incompatible with backfill, packaging materials, or shipping container materials?	No	
Sealed Containers Over 4L?	No	

IDC Verification

Is IDC correct? Yes **Recommended IDC** -

IDC Change Reason

Visual Exam Comment The remaining waste by weight percent is cellulosics consisting of wood.

Batch Id VEB14-00117 **Container Id** 10518188 **Analysis Id** 0000317062

Source Container

Is there a source container? Yes

Source Container ID	Location	IDC
10510664	destroyed @ 676- BXI/16	RF-760

IDC CODES

Current Container IDC Code: BN-508 **Recommended IDC Code:** -

Waste Material Items

Packaging Materials

Material Item	Quantity	Unit	Unit Wt	Item Wt(lbs)

Waste Items by Weight

Material Item	Quantity	Unit	Unit Wt	Item Wt(lbs)

Waste Items by Volume

Material Item	Quantity	Unit	Unit Wt	Item Wt(lbs)

Waste Parameters

Waste Parameter	Remaining Weight %	Actual Weight Lbs
Iron-based Metals/Alloys	0.000	0.000
Aluminum-based Metals/Alloys	0.000	0.000
Other metals	0.000	0.000
Other Inorganic Materials	0.000	0.000
Cellulosics	100.000	62.200
Rubber	0.000	0.000
Plastic (Waste Materials)	0.000	0.000
Inorganic matrix	0.000	0.000
Organic matrix	0.000	0.000
Soils/gravel	0.000	0.000
Steel (packaging materials)	0.000	26.000
Plastic (packaging materials)	0.000	0.000
Cellulosics Packaging	0.000	0.000
MLLW Waste	0.000	0.000

Esignature History

Esig Approval Id	User Id	E-signature Date	Comment
2736502	JBAILEY	19-APR-14 20:10:04	
2736503	MREIDER	19-APR-14 20:10:08	

VE Boxline and Repackaging Report

Batch Id VEB14-00117 **Container Id** 10518128 **Analysis Id** 0000317063

VE Date 19-APR-14 20:35:58 **Analysis Status** Pass

Gen-IDC Code BN-508 AMWTP Newly Generated Debris **VE Weight** 94.82 lbs.

Closure Date 19-APR-14 20:35:58 **Procedure Id** INST-FOI-17 **Net Weight** 68.82 lbs.

Container Type 55 **Revision** 27

Operator 1 JEFFREY K BAILEY **Waste Matrix** S5490 **Summary Category Group** S5000

Operator 2 MIKE REIDER **Equipment ID** VE BiD RPCK

General

Rigid Liner Present? No **Liner Type** NO LINER **Closure Method** No Bags

Liner Punctured? Yes **Layers Of Confinement** 0 **Fill Factor** 70 % **Liner Lid Present** No

Liquids

Liquids Present? No **Comment**

Liquid Between Liner and Drum 0 pints **Other Liquids** 0 pints

Containerized Liquid pints **Total Liquid Amount** 0 pints

Internal Container with Liquid 0 pints

Internal Container with Liquid No

Prohibited Liquids Present No

Containerized Liquid

Contents

Sharp Objects? No **Are Sharp Objects Protected?** Yes

	Value	*Comment*
Prohibited Compressed Gas Present?	No	
Explosives Present?	No	
Pyrophorics Present?	No	
Mercury Present?	No	
PCBs Present?	No	
PCB Mass (lbs)	0	
Wet Cell Batteries Present?	No	
Corrosives,Ignitables or Reactives Present?	No	
Beryllium Contaminates Present?	No	
Hazardous-Only Waste Present?	No	
Is Waste Incompatible with backfill, packaging materials, or shipping container materials?	No	
Sealed Containers Over 4L?	No	

IDC Verification

Is IDC correct? Yes **Recommended IDC** -

IDC Change Reason

Visual Exam Comment The remaining waste by weight percent is cellulosics consisting of wood.

VE Boxline and Repackaging Report

Batch Id VEB14-00117 **Container Id** 10518128 **Analysis Id** 0000317063

Source Container

Is there a source container? Yes

Source Container ID	Location	IDC
10510664	destroyed @ 676- BXI/16	RF-760

IDC CODES

Current Container IDC Code: BN-508 **Recommended IDC Code:** -

Waste Material Items

Packaging Materials

Material Item	Quantity	Unit	Unit Wt	Item Wt(lbs)

Waste Items by Weight

Material Item	Quantity	Unit	Unit Wt	Item Wt(lbs)

Waste Items by Volume

Material Item	Quantity	Unit	Unit Wt	Item Wt(lbs)

Waste Parameters

Waste Parameter	Remaining Weight %	Actual Weight Lbs
Iron-based Metals/Alloys	0.000	0.000
Aluminum-based Metals/Alloys	0.000	0.000
Other metals	0.000	0.000
Other Inorganic Materials	0.000	0.000
Cellulosics	100.000	68.815
Rubber	0.000	0.000
Plastic (Waste Materials)	0.000	0.000
Inorganic matrix	0.000	0.000
Organic matrix	0.000	0.000
Soils/gravel	0.000	0.000
Steel (packaging materials)	0.000	26.000
Plastic (packaging materials)	0.000	0.000
Cellulosics Packaging	0.000	0.000
MLLW Waste	0.000	0.000

Esignature History

Esig Approval Id	User Id	E-signature Date	Comment
2736504	JBAILEY	19-APR-14 20:35:59	
2736505	MREIDER	19-APR-14 20:36:01	

VE Boxline and Repackaging Report

Batch Id VEB14-00117 **Container Id** 10518153 **Analysis Id** 0000317064

VE Date 19-APR-14 21:23:33 **Analysis Status** Pass

Gen-IDC Code BN-508 AMWTP Newly Generated Debris **VE Weight** 97.02 lbs.

Closure Date 19-APR-14 21:23:33 **Procedure Id** INST-FOI-17 **Net Weight** 71.02 lbs.

Container Type 55 **Revision** 27

Operator 1 JEFFREY K BAILEY **Waste Matrix** S5490 **Summary Category Group** S5000

Operator 2 MIKE REIDER **Equipment ID** VE BiD RPCK

General

Rigid Liner Present? No **Liner Type** NO LINER **Closure Method** No Bags

Liner Punctured? Yes **Layers Of Confinement** 0 **Fill Factor** 75 % **Liner Lid Present** No

Liquids

Liquids Present? No **Comment**

Liquid Between Liner and Drum 0 pints **Other Liquids** 0 pints

Containerized Liquid pints **Total Liquid Amount** 0 pints

Internal Container with Liquid 0 pints

Internal Container with Liquid No

Prohibited Liquids Present No

Containerized Liquid

Contents

Sharp Objects? No **Are Sharp Objects Protected?** Yes

	Value	*Comment*
Prohibited Compressed Gas Present?	No	
Explosives Present?	No	
Pyrophorics Present?	No	
Mercury Present?	No	
PCBs Present?	No	
PCB Mass (lbs)	0	
Wet Cell Batteries Present?	No	
Corrosives,Ignitables or Reactives Present?	No	
Beryllium Contaminates Present?	No	
Hazardous-Only Waste Present?	No	
Is Waste Incompatible with backfill, packaging materials, or shipping container materials?	No	
Sealed Containers Over 4L?	No	

IDC Verification

Is IDC correct? Yes **Recommended IDC** -

IDC Change Reason

Visual Exam Comment The remaining waste by weight percent is cellulosics consisting of wood, paper and cardboard.

Batch Id VEB14-00117 **Container Id** 10518153 **Analysis Id** 0000317064

Source Container

Is there a source container? Yes

Source Container ID	Location	IDC
10201598	destroyed @ 676- BXI/16	AE-100

IDC CODES

Current Container IDC Code: BN-508 **Recommended IDC Code:** -

Waste Material Items

Packaging Materials

Material Item	Quantity	Unit	Unit Wt	Item Wt(lbs)

Waste Items by Weight

Material Item	Quantity	Unit	Unit Wt	Item Wt(lbs)

Waste Items by Volume

Material Item	Quantity	Unit	Unit Wt	Item Wt(lbs)
Aluminum	0.500	PINTS	3.123	1.560
Plastic	2.000	PINTS	0.937	1.870

Waste Parameters

Waste Parameter	Remaining Weight %	Actual Weight Lbs
Iron-based Metals/Alloys	0.000	0.000
Aluminum-based Metals/Alloys	0.000	1.560
Other metals	0.000	0.000
Other Inorganic Materials	0.000	0.000
Cellulosics	100.000	67.590
Rubber	0.000	0.000
Plastic (Waste Materials)	0.000	1.870
Inorganic matrix	0.000	0.000
Organic matrix	0.000	0.000
Soils/gravel	0.000	0.000
Steel (packaging materials)	0.000	26.000
Plastic (packaging materials)	0.000	0.000
Cellulosics Packaging	0.000	0.000
MLLW Waste	0.000	0.000

Esignature History

Esig Approval Id	User Id	E-signature Date	Comment
2736517	JBAILEY	19-APR-14 21:23:33	
2736518	MREIDER	19-APR-14 21:23:35	

VE Boxline and Repackaging Report

Batch Id VEB14-00117 **Container Id** 10518142 **Analysis Id** 0000317070

VE Date 19-APR-14 21:46:43 **Analysis Status** Pass

Gen-IDC Code BN-508 AMWTP Newly Generated Debris **VE Weight** 105.84 lbs.

Closure Date 19-APR-14 21:46:43 **Procedure Id** INST-FOI-17 **Net Weight** 79.84 lbs.

Container Type 55 **Revision** 27

Operator 1 JEFFREY K BAILEY **Waste Matrix** S5490 **Summary Category Group** S5000

Operator 2 MIKE REIDER **Equipment ID** VE BiD RPCK

General

Rigid Liner Present? No **Liner Type** NO LINER **Closure Method** No Bags

Liner Punctured? Yes **Layers Of Confinement** 0 **Fill Factor** 75 % **Liner Lid Present** No

Liquids

Liquids Present? No **Comment**

Liquid Between Liner and Drum 0 pints **Other Liquids** 0 pints

Containerized Liquid pints **Total Liquid Amount** 0 pints

Internal Container with Liquid 0 pints

Internal Container with Liquid No

Prohibited Liquids Present No

Containerized Liquid

Contents

Sharp Objects? No **Are Sharp Objects Protected?** Yes

	Value	*Comment*
Prohibited Compressed Gas Present?	No	
Explosives Present?	No	
Pyrophorics Present?	No	
Mercury Present?	No	
PCBs Present?	No	
PCB Mass (lbs)	0	
Wet Cell Batteries Present?	No	
Corrosives,Ignitables or Reactives Present?	No	
Beryllium Contaminates Present?	No	
Hazardous-Only Waste Present?	No	
Is Waste Incompatible with backfill, packaging materials, or shipping container materials?	No	
Sealed Containers Over 4L?	No	

IDC Verification

Is IDC correct? Yes **Recommended IDC** -

IDC Change Reason

Visual Exam Comment The remaining waste by weight percent is cellulosics consisting of wood, paper and cardboard.

Batch Id VEB14-00117 **Container Id** 10518142 **Analysis Id** 0000317070

Source Container

Is there a source container? Yes

Source Container ID	Location	IDC
10201598	destroyed @ 676- BXI/16	AE-100

IDC CODES

Current Container IDC Code: BN-508 **Recommended IDC Code:** -

Waste Material Items

Packaging Materials

Material Item	Quantity	Unit	Unit Wt	Item Wt(lbs)

Waste Items by Weight

Material Item	Quantity	Unit	Unit Wt	Item Wt(lbs)

Waste Items by Volume

Material Item	Quantity	Unit	Unit Wt	Item Wt(lbs)
Plastic	2.000	PINTS	0.937	1.870

Waste Parameters

Waste Parameter	Remaining Weight %	Actual Weight Lbs
Iron-based Metals/Alloys	0.000	0.000
Aluminum-based Metals/Alloys	0.000	0.000
Other metals	0.000	0.000
Other Inorganic Materials	0.000	0.000
Cellulosics	100.000	77.970
Rubber	0.000	0.000
Plastic (Waste Materials)	0.000	1.870
Inorganic matrix	0.000	0.000
Organic matrix	0.000	0.000
Soils/gravel	0.000	0.000
Steel (packaging materials)	0.000	26.000
Plastic (packaging materials)	0.000	0.000
Cellulosics Packaging	0.000	0.000
MLLW Waste	0.000	0.000

Esignature History

Esig Approval Id	User Id	E-signature Date	Comment
2736519	JBAILEY	19-APR-14 21:46:44	
2736520	MREIDER	19-APR-14 21:46:46	

Batch Id VEB14-00117 **Container Id** 10518157 **Analysis Id** 0000317072

VE Date 19-APR-14 22:10:05 **Analysis Status** Pass

Gen-IDC Code BN-508 AMWTP Newly Generated Debris **VE Weight** 70.56 lbs.

Closure Date 19-APR-14 22:10:05 **Procedure Id** INST-FOI-17 **Net Weight** 44.56 lbs.

Container Type 55 **Revision** 27

Operator 1 JEFFREY K BAILEY **Waste Matrix** S5490 **Summary Category Group** S5000

Operator 2 MIKE REIDER **Equipment ID** VE BiD RPCK

General

Rigid Liner Present? No **Liner Type** NO LINER **Closure Method** No Bags

Liner Punctured? Yes **Layers Of Confinement** 0 **Fill Factor** 75 % **Liner Lid Present** No

Liquids

Liquids Present? No **Comment**

Liquid Between Liner and Drum 0 pints **Other Liquids** 0 pints

Containerized Liquid pints **Total Liquid Amount** 0 pints

Internal Container with Liquid 0 pints

Internal Container with Liquid No

Prohibited Liquids Present No

Containerized Liquid

Contents

Sharp Objects? No **Are Sharp Objects Protected?** Yes

	Value	*Comment*
Prohibited Compressed Gas Present?	No	
Explosives Present?	No	
Pyrophorics Present?	No	
Mercury Present?	No	
PCBs Present?	No	
PCB Mass (lbs)	0	
Wet Cell Batteries Present?	No	
Corrosives,Ignitables or Reactives Present?	No	
Beryllium Contaminates Present?	No	
Hazardous-Only Waste Present?	No	
Is Waste Incompatible with backfill, packaging materials, or shipping container materials?	No	
Sealed Containers Over 4L?	No	

IDC Verification

Is IDC correct? Yes **Recommended IDC** -

IDC Change Reason

Visual Exam Comment The remaining waste by weight percent is cellulosics consisting of wood, paper and cardboard.

VE Boxline and Repackaging Report

Batch Id VEB14-00117 **Container Id** 10518157 **Analysis Id** 0000317072

Source Container

Is there a source container? Yes

Source Container ID	Location	IDC
10201598	destroyed @ 676- BXI/16	AE-100

IDC CODES

Current Container IDC Code: BN-508 **Recommended IDC Code:** -

Waste Material Items

Packaging Materials

Material Item	Quantity	Unit	Unit Wt	Item Wt(lbs)

Waste Items by Weight

Material Item	Quantity	Unit	Unit Wt	Item Wt(lbs)

Waste Items by Volume

Material Item	Quantity	Unit	Unit Wt	Item Wt(lbs)
Plastic	4.000	PINTS	0.937	3.750

Waste Parameters

Waste Parameter	Remaining Weight %	Actual Weight Lbs
Iron-based Metals/Alloys	0.000	0.000
Aluminum-based Metals/Alloys	0.000	0.000
Other metals	0.000	0.000
Other Inorganic Materials	0.000	0.000
Cellulosics	100.000	40.810
Rubber	0.000	0.000
Plastic (Waste Materials)	0.000	3.750
Inorganic matrix	0.000	0.000
Organic matrix	0.000	0.000
Soils/gravel	0.000	0.000
Steel (packaging materials)	0.000	26.000
Plastic (packaging materials)	0.000	0.000
Cellulosics Packaging	0.000	0.000
MLLW Waste	0.000	0.000

Esignature History

Esig Approval Id	User Id	E-signature Date	Comment
2736521	JBAILEY	19-APR-14 22:10:06	
2736522	MREIDER	19-APR-14 22:10:08	

Batch Id VEB14-00117 **Container Id** 10518170 **Analysis Id** 0000317075

VE Date 19-APR-14 22:29:28 **Analysis Status** Pass

Gen-IDC Code BN-508 AMWTP Newly Generated Debris **VE Weight** 88.20 lbs.

Closure Date 19-APR-14 22:29:28 **Procedure Id** INST-FOI-17 **Net Weight** 62.20 lbs.

Container Type 55 **Revision** 27

Operator 1 JEFFREY K BAILEY **Waste Matrix** S5490 **Summary Category Group** S5000

Operator 2 MIKE REIDER **Equipment ID** VE BiD RPCK

General

Rigid Liner Present? No **Liner Type** NO LINER **Closure Method** No Bags

Liner Punctured? Yes **Layers Of Confinement** 0 **Fill Factor** 70 % **Liner Lid Present** No

Liquids

Liquids Present? No **Comment**

Liquid Between Liner and Drum 0 pints **Other Liquids** 0 pints

Containerized Liquid pints **Total Liquid Amount** 0 pints

Internal Container with Liquid 0 pints

Internal Container with Liquid No

Prohibited Liquids Present No

Containerized Liquid

Contents

Sharp Objects? Yes **Are Sharp Objects Protected?** No

	Value	*Comment*
Prohibited Compressed Gas Present?	No	
Explosives Present?	No	
Pyrophorics Present?	No	
Mercury Present?	No	
PCBs Present?	No	
PCB Mass (lbs)	0	
Wet Cell Batteries Present?	No	
Corrosives,Ignitables or Reactives Present?	No	
Beryllium Contaminates Present?	No	
Hazardous-Only Waste Present?	No	
Is Waste Incompatible with backfill, packaging materials, or shipping container materials?	No	
Sealed Containers Over 4L?	No	

IDC Verification

Is IDC correct? Yes **Recommended IDC** -

IDC Change Reason

Visual Exam Comment The remaining waste by weight percent is iron based metal alloys consisting of misc. scrap metal.

Batch Id VEB14-00117 **Container Id** 10518170 **Analysis Id** 0000317075

Source Container

Is there a source container? Yes

Source Container ID	Location	IDC
10201598	destroyed @ 676- BXI/16	AE-100

IDC CODES

Current Container IDC Code: BN-508 **Recommended IDC Code:** -

Waste Material Items

Packaging Materials

Material Item	Quantity	Unit	Unit Wt	Item Wt(lbs)

Waste Items by Weight

Material Item	Quantity	Unit	Unit Wt	Item Wt(lbs)

Waste Items by Volume

Material Item	Quantity	Unit	Unit Wt	Item Wt(lbs)
Paper	6.000	PINTS	0.969	5.810
Plastic	2.000	PINTS	0.937	1.870

Waste Parameters

Waste Parameter	Remaining Weight %	Actual Weight Lbs
Iron-based Metals/Alloys	100.000	54.520
Aluminum-based Metals/Alloys	0.000	0.000
Other metals	0.000	0.000
Other Inorganic Materials	0.000	0.000
Cellulosics	0.000	5.810
Rubber	0.000	0.000
Plastic (Waste Materials)	0.000	1.870
Inorganic matrix	0.000	0.000
Organic matrix	0.000	0.000
Soils/gravel	0.000	0.000
Steel (packaging materials)	0.000	26.000
Plastic (packaging materials)	0.000	0.000
Cellulosics Packaging	0.000	0.000
MLLW Waste	0.000	0.000

Esignature History

Esig Approval Id	User Id	E-signature Date	Comment
2736531	JBAILEY	19-APR-14 22:29:29	
2736532	MREIDER	19-APR-14 22:29:31	

VE Boxline and Repackaging Report

Batch Id VEB14-00117 **Container Id** 10518176 **Analysis Id** 0000317076

VE Date 19-APR-14 22:49:42 **Analysis Status** Pass

Gen-IDC Code BN-508 AMWTP Newly Generated Debris **VE Weight** 63.95 lbs.

Closure Date 19-APR-14 22:49:42 **Procedure Id** INST-FOI-17 **Net Weight** 37.95 lbs.

Container Type 55 **Revision** 27

Operator 1 JEFFREY K BAILEY **Waste Matrix** S5490 **Summary Category Group** S5000

Operator 2 MIKE REIDER **Equipment ID** VE BiD RPCK

General

Rigid Liner Present? No **Liner Type** NO LINER **Closure Method** No Bags

Liner Punctured? Yes **Layers Of Confinement** 0 **Fill Factor** 70 % **Liner Lid Present** No

Liquids

Liquids Present? No **Comment**

Liquid Between Liner and Drum 0 pints **Other Liquids** 0 pints

Containerized Liquid pints **Total Liquid Amount** 0 pints

Internal Container with Liquid 0 pints

Internal Container with Liquid No

Prohibited Liquids Present No

Containerized Liquid

Contents

Sharp Objects? Yes **Are Sharp Objects Protected?** No

	Value	*Comment*
Prohibited Compressed Gas Present?	No	
Explosives Present?	No	
Pyrophorics Present?	No	
Mercury Present?	No	
PCBs Present?	No	
PCB Mass (lbs)	0	
Wet Cell Batteries Present?	No	
Corrosives,Ignitables or Reactives Present?	No	
Beryllium Contaminates Present?	No	
Hazardous-Only Waste Present?	No	
Is Waste Incompatible with backfill, packaging materials, or shipping container materials?	No	
Sealed Containers Over 4L?	No	

IDC Verification

Is IDC correct? Yes **Recommended IDC** -

IDC Change Reason

Visual Exam Comment The remaining waste by weight percent is iron based metal alloys consisting of misc. scrap metal.

Batch Id VEB14-00117 **Container Id** 10518176 **Analysis Id** 0000317076

Source Container

Is there a source container? Yes

Source Container ID	Location	IDC
10201598	destroyed @ 676- BXI/16	AE-100

IDC CODES

Current Container IDC Code: BN-508 **Recommended IDC Code:** -

Waste Material Items

Packaging Materials

Material Item	Quantity	Unit	Unit Wt	Item Wt(lbs)

Waste Items by Weight

Material Item	Quantity	Unit	Unit Wt	Item Wt(lbs)

Waste Items by Volume

Material Item	Quantity	Unit	Unit Wt	Item Wt(lbs)
Plastic	8.000	PINTS	0.937	7.500

Waste Parameters

Waste Parameter	Remaining Weight %	Actual Weight Lbs
Iron-based Metals/Alloys	100.000	30.445
Aluminum-based Metals/Alloys	0.000	0.000
Other metals	0.000	0.000
Other Inorganic Materials	0.000	0.000
Cellulosics	0.000	0.000
Rubber	0.000	0.000
Plastic (Waste Materials)	0.000	7.500
Inorganic matrix	0.000	0.000
Organic matrix	0.000	0.000
Soils/gravel	0.000	0.000
Steel (packaging materials)	0.000	26.000
Plastic (packaging materials)	0.000	0.000
Cellulosics Packaging	0.000	0.000
MLLW Waste	0.000	0.000

Esignature History

Esig Approval Id	User Id	E-signature Date	Comment
2736538	JBAILEY	19-APR-14 22:49:43	
2736539	MREIDER	19-APR-14 22:49:45	

Batch Id VEB14-00117 **Container Id** 10518169 **Analysis Id** 0000317077

VE Date 19-APR-14 23:19:57 **Analysis Status** Pass

Gen-IDC Code BN-508 AMWTP Newly Generated Debris **VE Weight** 77.18 lbs.

Closure Date 19-APR-14 23:19:57 **Procedure Id** INST-FOI-17 **Net Weight** 51.18 lbs.

Container Type 55 **Revision** 27

Operator 1 JEFFREY K BAILEY **Waste Matrix** S5490 **Summary Category Group** S5000

Operator 2 MIKE REIDER **Equipment ID** VE BiD RPCK

General

Rigid Liner Present? No **Liner Type** NO LINER **Closure Method** No Bags

Liner Punctured? Yes **Layers Of Confinement** 0 **Fill Factor** 70 % **Liner Lid Present** No

Liquids

Liquids Present? No **Comment**

Liquid Between Liner and Drum 0 pints **Other Liquids** 0 pints

Containerized Liquid pints **Total Liquid Amount** 0 pints

Internal Container with Liquid 0 pints

Internal Container with Liquid No

Prohibited Liquids Present No

Containerized Liquid

Contents

Sharp Objects? Yes **Are Sharp Objects Protected?** No

	Value	*Comment*
Prohibited Compressed Gas Present?	No	
Explosives Present?	No	
Pyrophorics Present?	No	
Mercury Present?	No	
PCBs Present?	No	
PCB Mass (lbs)	0	
Wet Cell Batteries Present?	No	
Corrosives,Ignitables or Reactives Present?	No	
Beryllium Contaminates Present?	No	
Hazardous-Only Waste Present?	No	
Is Waste Incompatible with backfill, packaging materials, or shipping container materials?	No	
Sealed Containers Over 4L?	No	

IDC Verification

Is IDC correct? Yes **Recommended IDC** -

IDC Change Reason

Visual Exam Comment The remaining waste by weight percent is iron based metal alloys consisting of misc. scrap metal.

AMWTP
Advanced Mixed Waste Treatment Project

AMWTP

VE Boxline and Repackaging Report

Date: 26-Sep-2014

Time: 11:21

Batch Id VEB14-00117 **Container Id** 10518169 **Analysis Id** 0000317077

---Source Container---

Is there a source container? Yes

Source Container ID	Location	IDC
10201598	destroyed @ 676- BXI/16	AE-100

---IDC CODES---

Current Container IDC Code: BN-508 **Recommended IDC Code:** -

--- Waste Material Items---

---Packaging Materials---

Material Item	Quantity	Unit	Unit Wt	Item Wt(lbs)

---Waste Items by Weight---

Material Item	Quantity	Unit	Unit Wt	Item Wt(lbs)

---Waste Items by Volume---

Material Item	Quantity	Unit	Unit Wt	Item Wt(lbs)
Paper	8.000	PINTS	0.969	7.750
Wood	1.000	PINTS	0.702	0.700
Plastic	1.000	PINTS	0.937	0.940

---Waste Parameters---

Waste Parameter	Remaining Weight %	Actual Weight Lbs
Iron-based Metals/Alloys	100.000	41.785
Aluminum-based Metals/Alloys	0.000	0.000
Other metals	0.000	0.000
Other Inorganic Materials	0.000	0.000
Cellulosics	0.000	8.450
Rubber	0.000	0.000
Plastic (Waste Materials)	0.000	0.940
Inorganic matrix	0.000	0.000
Organic matrix	0.000	0.000
Soils/gravel	0.000	0.000
Steel (packaging materials)	0.000	26.000
Plastic (packaging materials)	0.000	0.000
Cellulosics Packaging	0.000	0.000
MLLW Waste	0.000	0.000

---Esignature History---

Esig Approval Id	User Id	E-signature Date	Comment
2736559	JBAILEY	19-APR-14 23:19:57	
2736560	MREIDER	19-APR-14 23:19:58	

-----End of VE Boxline Report-----

AMWTP
Advanced Mixed Waste Treatment Project

AMWTP

Checklist Report

Date: 26-Sep-2014

Time: 11:20

Batch Id VEB14-00117 **Open Date** 19-APR-14 **Close Date** 19-APR-14

Reviewer RONALD GRISE **Approval Level** Independent Technical Reviewer

Approval Date 20-APR-14 **Review Iteration** 1

Question Text	Answer	Requirement	Comment
1. Is the QA documentation for the Batch Data Reports complete and includes data reports and QC results? o VE Batch Coversheet o Table of Contents (manual review only) o VE Analysis Reports o Analytical Balance Calibration Check Sheet (Form-1215), if applicable (manual review only) o ITR Checklist (Form-1415, manual review only) o Batch Data Report Supplemental Comment Form (Form-1491, manual review only) o Associated NCRs (referenced in WTS) o Audio/Video Recording References, if applicable	Yes		
2. Are there 20 containers or less in the batch?	Yes		
3. Was each VE Operator qualified at the time of the VE event?	Yes		
4. Was a VE data form completed for each container in the batch?	Yes		
Was the data generated in a technically correct manner using the correct revision of INST-OI-34, Non-facility Visual Examination or INST-FOI-17, Facility Visual Examination Operations, as applicable.	Yes		
6. Was the correct revision of the procedure documented on each analysis report?	Yes		
7. Was the E-signature History review performed?	Yes		
8. Was guidance from VEE documented, as applicable?	N/A		
9. Does every drum reported in the batch have a valid audio/video recording (as applicable)?	N/A		
10. Does the physical form match the waste stream description, waste matrix code and IDC?	Yes		
11. Did the VE event result in an IDC/Waste Matrix Code change? If so, was an NCR initiated?	No		
12. Were the waste material parameters documented correctly?	Yes		
13. Was the presence or absence of prohibited items properly identified? o If prohibited items were identified, were NCRs initiated?	Yes		
14. Has the description of rigid liners and layers of confinement been properly documented?	Yes		
15. Was the drum age criteria (DAC) entered correctly and completely? o Closure Method(s) o Liner Puncture Status o Layers of Confinement o Closure Date o Packaging Configuration o Type and number of filters, as applicable o Liner hole presence and diameter, as applicable	Yes		
16. Have filters been installed or removed from drum as recorded in WTS, as applicable?	N/A		
17. Hand calculations and unit conversions are correct? o Does the packaging weight plus the net weight equal the gross weight of the drum in the estimated waste material parameters, and for the unit conversions that are entered by volume or weight?	Yes		
18. Were all units and significant figures used correct for all reported volumes/weights?	Yes		

Batch Id VEB14-00117 **Open Date** 19-APR-14 **Close Date** 19-APR-14

Reviewer RONALD GRISE **Approval Level** Independent Technical Reviewer

Approval Date 20-APR-14 **Review Iteration** 1

Question Text	Answer	Requirement	Comment
19. Has the data been reviewed for transcription errors as appropriate?	Yes		
20. Were the Visual Examination QAOs met? o Precision o Accuracy o Completeness o Comparability	Yes		
21. Is each data form signed by qualified VE Operators, as applicable per the appropriate procedure being used?	Yes		
22. Was the audio/video check satisfactory, as applicable?	N/A		
23. Was the scale or balance check weight event satisfactory, as applicable?	N/A		
24. Are the QC weight checks within the tolerance of the scale or balance, as applicable?	N/A		
25. Were any NCRs generated for drums containing prohibited items or any nonconforming conditions that failed to meet DQOs or QAOs? o Include the NCRs as appropriate, in the Batch Data Report.	No		
26. Were the rework requirements clearly identified in WTS or on the BDR?	N/A		

Batch Id VEB14-00117 **Open Date** 19-APR-14 **Close Date** 19-APR-14

Reviewer NICK STYHL **Approval Level** SPM Data Validation

Approval Date 23-APR-14 **Review Iteration** 1

Question Text	Answer	Requirement	Comment
(1) Has the batch received a Data Generation Level Independent Technical Review?	Yes	MP-TRUW-8.2, C3-10b(1)	
(2) Are the batch data review checklists complete?	Yes	MP-TRUW-8.2, C3-10b(1)	
(3) When identified, were PCBs, mercury, lead, or other hazardous contaminants consistent with the waste stream AK Summary Report(s) and/or AK documentation?	N/A	MP-TRUW-8.2, C4-3	None identified.
(4) Are any ignitable, corrosive, or reactive wastes identified?	No	MP-TRUW-8.2, C4-3	
(5) Are the packaging configurations identified on the VE consistent with the waste stream AK Summary Report(s) and/or AK documentation?	Yes	MP-TRUW-8.2, C4-3	
(6) Do the drums in this batch contain typical waste items consistent with waste stream AK Summary Report(s) and/or AK documentation?	Yes	MP-TRUW-8.2, C4-3	
(7) Are the Waste Matrix Codes and physical form descriptions consistent with AK?	Yes	MP-TRUW-8.2, C4-3	
(8) Have all AK discrepancies been resolved and have all AK Resolution checklists been approved? Reference all waste stream AK documentation used in review of this data package.	N/A	MP-TRUW-8.2, C4-3	No discrepancies. MP-TRUW-05, MP-TRUW-06
(9) Does the batch report identify the correct implementing procedure number and revision number used for this testing method?	Yes	MP-TRUW-8.2, C3-4 and Table C3-11	
(10) Have the Waste Matrix Code (WMC) and IDC for all drums in the batch remained the same as originally assigned by the historical designation? NOTE: If not, note the drum number in the comment field and notify the Acceptable Knowledge Expert (AKE) if an NCR does not exist for the WMC and IDC change.	Yes	MP-TRUW-8.2, C-3c and C1-4	The IDC/WMC and summary category for newly generated waste are assigned by the operators during the VE event.
(11) Does the physical form of the waste match the WMC, waste stream description, and identify the absence of prohibited items?	Yes	MP-TRUW-8.2, C-3c and C1-4	
(12) If observable liquids exist in the drum, is an estimate of quantity given?	N/A	MP-TRUW-8.2, C-3c and C1-4	No residual liquids exist.
(13) Precision: Have all discrepancies been reconciled between the operator and the ITR with regard to identification of WMC, liquids in excess of TSDF-WAC limits, and compressed gases?	Yes	MP-TRUW-8.2 C3-4b	
(14) Accuracy: Have all operators passed a comprehensive examination and demonstrated satisfactory performance in the presence of the VE expert during initial and subsequent qualifications?	Yes	MP-TRUW-8.2 C3-4b	
(15) Completeness: Has a validated VE data form been obtained for 100% of the waste containers subject to VE?	Yes	MP-TRUW-8.2 C3-4b	
(16) Comparability: Has the comparability of VE data from different operators been enhanced by use of standardized VE procedures and operator qualifications?	Yes	MP-TRUW-8.2 C3-4b	
(17) Does the data for all containers within this batch meet the review, validation, and verification requirements? · Are proper units (e.g. Liters or pounds) and significant figure used? · Is the BDR complete (all pages identified in the BDR and numbered according)? - VE Batch Coversheet - Table of Contents (manual review only) - VE Analysis Reports - Analytical Balance Calibration Checklist (if applicable) - ITR Checklist (Form-1415)	Yes	MP-TRUW-8.2, C3-10b and Table C3-11	

Batch Id VEB14-00117 **Open Date** 19-APR-14 **Close Date** 19-APR-14

Reviewer NICK STYHL **Approval Level** SPM Data Validation

Approval Date 23-APR-14 **Review Iteration** 1

Question Text	Answer	Requirement	Comment
- Associated NCRs - Audio/Video Recordings (if applicable)			
(18) Do the drum reports contain the (a) Batch Data Report number and date, (b) waste container number (c)WMC, (d) implementing procedure and revision, (e) audio/video recording reference, (f) audio and video QC checks were performed and satisfactory, (g) verification that the physical form matches the waste stream description and WMC, (h) absence of prohibited items, (i) gross container weight, (j) waste material parameter weights, and (k) signature and date of examination (signatures of both operators when applicable)?	Yes	MP-TRUW-8.2, C1-4 and Table C3-11	Audio/Video recording and QC checks reference not applicable.
(19) Is the description of container contents detailed enough to provide verification of estimated weights for the waste matrix parameters identified?	Yes	MP-TRUW-8.2, C1-4 and Table C3-11	
(20) Is there a valid second weight check for every 10 items?	N/A	MP-TRUW-8.2, C1-4	Scales were not used during this VE event.
(21) Verification of two operator signatures when doing VE?	Yes	MP-TRUW-8.2, C-3d(1) and Table C3-11	
(22) Are there 20 or fewer containers in the batch?	Yes	MP-TRUW-8.2, C1-3 and C3-10	
(23) Review all NCRs (open and closed). Can the batch be approved?	Yes	MP-TRUW-8.2, C3-13	
(24) All data associated with this BDR is acceptable for signature release?	Yes	MP-TRUW-8.2, C3-10b and C3-10b(1)	

Batch Id VEB14-00117 **Open Date** 19-APR-14 **Close Date** 19-APR-14

Esignature History

Esig Approval ID	User ID	Esig Date	Approval Level	Comments
2739886	NSTYHL	23-APR-14	SPM	Approve batch.
2736747	RGRISE	20-APR-14	ITR	Promote batch to SPM level.

AMWTP

Advanced Mixed Waste Treatment Project

AMWTP

Non-Conformance Report

Date: 26-Sep-2014

Time: 11:25

*****Batch NCR(s)*****

Batch Type	VEB	Batch ID	VEB14-00117		
Trackwise Number		**Status**		**Opened Date**	**Closed Date**

*****Container NCR(s)*****

Container ID *or related Batch ID*	Trackwise Number	Status	Opened Date	Closed Date

*****End of Non-Conformance Report*****

AMWTP
Advanced Mixed Waste Treatment Project

AMWTP

Scale Check Event Report

Date: 26-Sep-2014

Time: 11:25

Batch Id	VEB14-00117	**Container Id**	10518203
Batch Id	VEB14-00117	**Container Id**	10518131
Batch Id	VEB14-00117	**Container Id**	10518142
Batch Id	VEB14-00117	**Container Id**	10518188
Batch Id	VEB14-00117	**Container Id**	10518153
Batch Id	VEB14-00117	**Container Id**	10518182
Batch Id	VEB14-00117	**Container Id**	10518184
Batch Id	VEB14-00117	**Container Id**	10518141
Batch Id	VEB14-00117	**Container Id**	10518170
Batch Id	VEB14-00117	**Container Id**	10518176
Batch Id	VEB14-00117	**Container Id**	10518186
Batch Id	VEB14-00117	**Container Id**	10518200
Batch Id	VEB14-00117	**Container Id**	10518169
Batch Id	VEB14-00117	**Container Id**	10518143
Batch Id	VEB14-00117	**Container Id**	10518150
Batch Id	VEB14-00117	**Container Id**	10518139
Batch Id	VEB14-00117	**Container Id**	10518128
Batch Id	VEB14-00117	**Container Id**	10518157
Batch Id	VEB14-00117	**Container Id**	10518147
Batch Id	VEB14-00117	**Container Id**	10518138

DIVIDER

PAGE

AMWTP

Advanced Mixed Waste Treatment Project

AMWTP

Batch Report Coversheet

Date: 26-Sep-2014

Time: 14:16

Batch Type VE Boxline

Batch Report No. VEB14-00146

Batch Id VEB14-00146 **Open Date** 04-MAY-14 16:31:03 **Close Date** 04-MAY-14 22:33:57

Batch Status AP

Test Facility Idaho AMWTP

Equipment Id VE BiD RPCK VE Box Repackaging Into Drums

Container Id	IDC	Analysis Id	Date Examined	QC Type	Analysis Status	Operator
10519272	BN-508	0000317955	04-MAY-14 16:31:05	Original	P	BRIAN HAWKE
10519279	BN-508	0000317957	04-MAY-14 16:36:23	Original	P	SARA FELLOWS
10519320	BN-508	0000317958	04-MAY-14 16:44:46	Original	P	BRIAN HAWKE
10519280	BN-508	0000317959	04-MAY-14 16:56:24	Original	P	BRIAN HAWKE
10520035	BN-508	0000317960	04-MAY-14 17:07:38	Original	P	BRIAN HAWKE
10519271	BN-508	0000317961	04-MAY-14 17:19:02	Original	P	SARA FELLOWS
10519281	BN-508	0000317962	04-MAY-14 17:19:34	Original	P	BRIAN HAWKE
10519378	BN-508	0000317963	04-MAY-14 19:26:45	Original	P	ANTHONY CAIN
10520013	BN-508	0000317965	04-MAY-14 19:55:27	Original	P	ANTHONY CAIN
10519322	BN-508	0000317966	04-MAY-14 19:59:31	Original	P	MICHAEL BECK
10520024	BN-508	0000317967	04-MAY-14 20:11:48	Original	P	ANTHONY CAIN
10519989	BN-508	0000317971	04-MAY-14 20:53:13	Original	P	ANTHONY CAIN
10519292	BN-508	0000317972	04-MAY-14 21:01:16	Original	P	MICHAEL BECK
10520005	BN-508	0000317973	04-MAY-14 21:25:17	Original	P	ANTHONY CAIN
10519383	BN-508	0000317974	04-MAY-14 21:41:50	Original	P	ANTHONY CAIN
10520008	BN-508	0000317975	04-MAY-14 21:52:26	Original	P	ANTHONY CAIN
10520002	BN-508	0000317976	04-MAY-14 22:06:40	Original	P	ANTHONY CAIN
10519382	BN-508	0000317977	04-MAY-14 22:16:10	Original	P	MICHAEL BECK
10519361	BN-508	0000317979	04-MAY-14 22:18:36	Original	P	ANTHONY CAIN
10519994	BN-508	0000317980	04-MAY-14 22:32:57	Original	P	ANTHONY CAIN

INFORMATION ONLY

**********Batch Comments**********

Written By	Date	Comment
CSIMMONS	05-MAY-14 17:14:10	This batch was validated to MP-TRUW-8.8.
CSIMMONS	05-MAY-14 17:14:10	No rework was identified for this batch.
CSIMMONS	05-MAY-14 17:14:10	Promoted batch to SPM level.
NSTYHL	07-MAY-14 14:01:22	SPM review complete.
NSTYHL	07-MAY-14 14:01:22	Approve batch.

**********Batch E-Signature History**********

Approval ID	User ID	Signature Date	Comment
2749081	CSIMMONS	05-MAY-2014 17:14:10	Promoted batch to SPM level.
2750467	NSTYHL	07-MAY-2014 14:01:22	Approve batch.

***** End of Batch Report Coversheet Report *****

AMWTP
Advanced Mixed Waste Treatment Project

AMWTP

VE Boxline and Repackaging Report

Date: 26-Sep-2014

Time: 14:17

Batch Id VEB14-00146 **Container Id** 10519272 **Analysis Id** 0000317955

VE Date 04-MAY-14 16:31:05 **Analysis Status** Pass

Gen-IDC Code BN-508 AMWTP Newly Generated Debris **VE Weight** 81.59 lbs.

Closure Date 04-MAY-14 16:31:05 **Procedure Id** INST-FOI-17 **Net Weight** 55.59 lbs.

Container Type 55 **Revision** 27

Operator 1 BRIAN HAWKE **Waste Matrix** S5490 **Summary Category Group** S5000

Operator 2 JUSTIN BURTON **Equipment ID** VE BiD RPCK

General

Rigid Liner Present? No **Liner Type** NO LINER **Closure Method** No Bags

Liner Punctured? Yes **Layers Of Confinement** 0 **Fill Factor** 80 % **Liner Lid Present** No

Liquids

Liquids Present? No **Comment**

Liquid Between Liner and Drum 0 pints **Other Liquids** 0 pints

Containerized Liquid pints **Total Liquid Amount** 0 pints

Internal Container with Liquid 0 pints

Internal Container with Liquid No

Prohibited Liquids Present No

Containerized Liquid

Contents

Sharp Objects? No **Are Sharp Objects Protected?** Yes

	Value	*Comment*
Prohibited Compressed Gas Present?	No	
Explosives Present?	No	
Pyrophorics Present?	No	
Mercury Present?	No	
PCBs Present?	No	
PCB Mass (lbs)	0	
Wet Cell Batteries Present?	No	
Corrosives,Ignitables or Reactives Present?	No	
Beryllium Contaminates Present?	No	
Hazardous-Only Waste Present?	No	
Is Waste Incompatible with backfill, packaging materials, or shipping container materials?	No	
Sealed Containers Over 4L?	No	

IDC Verification

Is IDC correct? Yes **Recommended IDC** -

IDC Change Reason

Visual Exam Comment The remaining waste by weight percent is cellulosics consisting of wood.

VE Boxline and Repackaging Report

Batch Id VEB14-00146 **Container Id** 10519272 **Analysis Id** 0000317955

Source Container

Is there a source container? Yes

Source Container ID	Location	IDC
10516897	destroyed @ 676- BXI/8	RF-760

IDC CODES

Current Container IDC Code: BN-508 **Recommended IDC Code:** -

Waste Material Items

Packaging Materials

Material Item	Quantity	Unit	Unit Wt	Item Wt(lbs)

Waste Items by Weight

Material Item	Quantity	Unit	Unit Wt	Item Wt(lbs)

Waste Items by Volume

Material Item	Quantity	Unit	Unit Wt	Item Wt(lbs)
Plastic	2.000	PINTS	0.937	1.870

Waste Parameters

Waste Parameter	Remaining Weight %	Actual Weight Lbs
Iron-based Metals/Alloys	0.000	0.000
Aluminum-based Metals/Alloys	0.000	0.000
Other metals	0.000	0.000
Other Inorganic Materials	0.000	0.000
Cellulosics	100.000	53.715
Rubber	0.000	0.000
Plastic (Waste Materials)	0.000	1.870
Inorganic matrix	0.000	0.000
Organic matrix	0.000	0.000
Soils/gravel	0.000	0.000
Steel (packaging materials)	0.000	26.000
Plastic (packaging materials)	0.000	0.000
Cellulosics Packaging	0.000	0.000
MLLW Waste	0.000	0.000

Esignature History

Esig Approval Id	User Id	E-signature Date	Comment
2748243	BHAWKE	04-MAY-14 16:31:06	
2748244	JBURTON	04-MAY-14 16:31:12	

VE Boxline and Repackaging Report

Batch Id VEB14-00146 **Container Id** 10519279 **Analysis Id** 0000317957

VE Date 04-MAY-14 16:36:23 **Analysis Status** Pass

Gen-IDC Code BN-508 AMWTP Newly Generated Debris **VE Weight** 125.69 lbs.

Closure Date 04-MAY-14 16:36:23 **Procedure Id** INST-FOI-17 **Net Weight** 99.69 lbs.

Container Type 55 **Revision** 27

Operator 1 SARA FELLOWS **Waste Matrix** S5490 **Summary Category Group** S5000

Operator 2 JOHN CUNNINGHAM **Equipment ID** VE BiD RPCK

General

Rigid Liner Present? No **Liner Type** NO LINER **Closure Method** No Bags

Liner Punctured? Yes **Layers Of Confinement** 0 **Fill Factor** 75 % **Liner Lid Present** No

Liquids

Liquids Present? No **Comment**

Liquid Between Liner and Drum 0 pints **Other Liquids** 0 pints

Containerized Liquid pints **Total Liquid Amount** 0 pints

Internal Container with Liquid 0 pints

Internal Container with Liquid No

Prohibited Liquids Present No

Containerized Liquid

Contents

Sharp Objects? Yes **Are Sharp Objects Protected?** No

	Value	*Comment*
Prohibited Compressed Gas Present?	No	
Explosives Present?	No	
Pyrophorics Present?	No	
Mercury Present?	No	
PCBs Present?	No	
PCB Mass (lbs)	0	
Wet Cell Batteries Present?	No	
Corrosives,Ignitables or Reactives Present?	No	
Beryllium Contaminates Present?	No	
Hazardous-Only Waste Present?	No	
Is Waste Incompatible with backfill, packaging materials, or shipping container materials?	No	
Sealed Containers Over 4L?	No	

IDC Verification

Is IDC correct? Yes **Recommended IDC** -

IDC Change Reason

Visual Exam Comment Remaining waste by weight percent is Iron Based Metals/Alloys consisting of misc. scrap metal.

Batch Id VEB14-00146 **Container Id** 10519279 **Analysis Id** 0000317957

Source Container

Is there a source container? Yes

Source Container ID	Location	IDC
10130758	destroyed @ 676- BXI/16	AE-100

IDC CODES

Current Container IDC Code: BN-508 **Recommended IDC Code:** -

Waste Material Items

Packaging Materials

Material Item	Quantity	Unit	Unit Wt	Item Wt(lbs)

Waste Items by Weight

Material Item	Quantity	Unit	Unit Wt	Item Wt(lbs)

Waste Items by Volume

Material Item	Quantity	Unit	Unit Wt	Item Wt(lbs)
Paper	1.000	PINTS	0.969	0.970
Copper	1.500	PINTS	9.369	14.050
Plastic	2.000	PINTS	0.937	1.870

Waste Parameters

Waste Parameter	Remaining Weight %	Actual Weight Lbs
Iron-based Metals/Alloys	100.000	82.795
Aluminum-based Metals/Alloys	0.000	0.000
Other metals	0.000	14.050
Other Inorganic Materials	0.000	0.000
Cellulosics	0.000	0.970
Rubber	0.000	0.000
Plastic (Waste Materials)	0.000	1.870
Inorganic matrix	0.000	0.000
Organic matrix	0.000	0.000
Soils/gravel	0.000	0.000
Steel (packaging materials)	0.000	26.000
Plastic (packaging materials)	0.000	0.000
Cellulosics Packaging	0.000	0.000
MLLW Waste	0.000	0.000

Esignature History

Esig Approval Id	User Id	E-signature Date	Comment
2748246	SFELLOWS	04-MAY-14 16:36:23	
2748247	JCUNNINGHAM	04-MAY-14 16:36:26	

VE Boxline and Repackaging Report

Batch Id VEB14-00146 **Container Id** 10519320 **Analysis Id** 0000317958

VE Date 04-MAY-14 16:44:46 **Analysis Status** Pass

Gen-IDC Code BN-508 AMWTP Newly Generated Debris **VE Weight** 86.00 lbs.

Closure Date 04-MAY-14 16:44:46 **Procedure Id** INST-FOI-17 **Net Weight** 60.00 lbs.

Container Type 55 **Revision** 27

Operator 1 BRIAN HAWKE **Waste Matrix** S5490 **Summary Category Group** S5000

Operator 2 JUSTIN BURTON **Equipment ID** VE BiD RPCK

General

Rigid Liner Present? No **Liner Type** NO LINER **Closure Method** No Bags

Liner Punctured? Yes **Layers Of Confinement** 0 **Fill Factor** 80 % **Liner Lid Present** No

Liquids

Liquids Present? No **Comment**

Liquid Between Liner and Drum 0 pints **Other Liquids** 0 pints

Containerized Liquid pints **Total Liquid Amount** 0 pints

Internal Container with Liquid 0 pints

Internal Container with Liquid No

Prohibited Liquids Present No

Containerized Liquid

Contents

Sharp Objects? No **Are Sharp Objects Protected?** Yes

	Value	*Comment*
Prohibited Compressed Gas Present?	No	
Explosives Present?	No	
Pyrophorics Present?	No	
Mercury Present?	No	
PCBs Present?	No	
PCB Mass (lbs)	0	
Wet Cell Batteries Present?	No	
Corrosives,Ignitables or Reactives Present?	No	
Beryllium Contaminates Present?	No	
Hazardous-Only Waste Present?	No	
Is Waste Incompatible with backfill, packaging materials, or shipping container materials?	No	
Sealed Containers Over 4L?	No	

IDC Verification

Is IDC correct? Yes **Recommended IDC** -

IDC Change Reason

Visual Exam Comment The remaining waste by weight percent is cellulosics consisting of wood.

Batch Id VEB14-00146 **Container Id** 10519320 **Analysis Id** 0000317958

Source Container

Is there a source container? Yes

Source Container ID	Location	IDC
10516897	destroyed @ 676- BXI/8	RF-760

IDC CODES

Current Container IDC Code: BN-508 **Recommended IDC Code:** -

Waste Material Items

Packaging Materials

Material Item	Quantity	Unit	Unit Wt	Item Wt(lbs)

Waste Items by Weight

Material Item	Quantity	Unit	Unit Wt	Item Wt(lbs)

Waste Items by Volume

Material Item	Quantity	Unit	Unit Wt	Item Wt(lbs)
Plastic	1.000	PINTS	0.937	0.940

Waste Parameters

Waste Parameter	Remaining Weight %	Actual Weight Lbs
Iron-based Metals/Alloys	0.000	0.000
Aluminum-based Metals/Alloys	0.000	0.000
Other metals	0.000	0.000
Other Inorganic Materials	0.000	0.000
Cellulosics	100.000	59.055
Rubber	0.000	0.000
Plastic (Waste Materials)	0.000	0.940
Inorganic matrix	0.000	0.000
Organic matrix	0.000	0.000
Soils/gravel	0.000	0.000
Steel (packaging materials)	0.000	26.000
Plastic (packaging materials)	0.000	0.000
Cellulosics Packaging	0.000	0.000
MLLW Waste	0.000	0.000

Esignature History

Esig Approval Id	User Id	E-signature Date	Comment
2748260	BHAWKE	04-MAY-14 16:44:46	
2748261	JBURTON	04-MAY-14 16:44:48	

Batch Id VEB14-00146 **Container Id** 10519280 **Analysis Id** 0000317959

VE Date 04-MAY-14 16:56:24 **Analysis Status** Pass

Gen-IDC Code BN-508 AMWTP Newly Generated Debris **VE Weight** 94.82 lbs.

Closure Date 04-MAY-14 16:56:24 **Procedure Id** INST-FOI-17 **Net Weight** 68.82 lbs.

Container Type 55 **Revision** 27

Operator 1 BRIAN HAWKE **Waste Matrix** S5490 **Summary Category Group** S5000

Operator 2 JUSTIN BURTON **Equipment ID** VE BiD RPCK

General

Rigid Liner Present? No **Liner Type** NO LINER **Closure Method** No Bags

Liner Punctured? Yes **Layers Of Confinement** 0 **Fill Factor** 80 % **Liner Lid Present** No

Liquids

Liquids Present? No **Comment**

Liquid Between Liner and Drum 0 pints

Containerized Liquid pints

Internal Container with Liquid 0 pints

Other Liquids 0 pints

Total Liquid Amount 0 pints

Internal Container with Liquid No

Prohibited Liquids Present No

Containerized Liquid

Contents

Sharp Objects? No **Are Sharp Objects Protected?** Yes

	Value	*Comment*
Prohibited Compressed Gas Present?	No	
Explosives Present?	No	
Pyrophorics Present?	No	
Mercury Present?	No	
PCBs Present?	No	
PCB Mass (lbs)	0	
Wet Cell Batteries Present?	No	
Corrosives,Ignitables or Reactives Present?	No	
Beryllium Contaminates Present?	No	
Hazardous-Only Waste Present?	No	
Is Waste Incompatible with backfill, packaging materials, or shipping container materials?	No	
Sealed Containers Over 4L?	No	

IDC Verification

Is IDC correct? Yes **Recommended IDC** -

IDC Change Reason

Visual Exam Comment The remaining waste by weight percent is cellulosics consisting of wood.

Batch Id VEB14-00146 **Container Id** 10519280 **Analysis Id** 0000317959

Source Container

Is there a source container? Yes

Source Container ID	Location	IDC
10516897	destroyed @ 676- BXI/8	RF-760

IDC CODES

Current Container IDC Code: BN-508 **Recommended IDC Code:** -

Waste Material Items

Packaging Materials

Material Item	Quantity	Unit	Unit Wt	Item Wt(lbs)

Waste Items by Weight

Material Item	Quantity	Unit	Unit Wt	Item Wt(lbs)

Waste Items by Volume

Material Item	Quantity	Unit	Unit Wt	Item Wt(lbs)
Plastic	2.000	PINTS	0.937	1.870

Waste Parameters

Waste Parameter	Remaining Weight %	Actual Weight Lbs
Iron-based Metals/Alloys	0.000	0.000
Aluminum-based Metals/Alloys	0.000	0.000
Other metals	0.000	0.000
Other Inorganic Materials	0.000	0.000
Cellulosics	100.000	66.945
Rubber	0.000	0.000
Plastic (Waste Materials)	0.000	1.870
Inorganic matrix	0.000	0.000
Organic matrix	0.000	0.000
Soils/gravel	0.000	0.000
Steel (packaging materials)	0.000	26.000
Plastic (packaging materials)	0.000	0.000
Cellulosics Packaging	0.000	0.000
MLLW Waste	0.000	0.000

Esignature History

Esig Approval Id	User Id	E-signature Date	Comment
2748272	BHAWKE	04-MAY-14 16:56:24	
2748273	JBURTON	04-MAY-14 16:56:27	

Batch Id VEB14-00146 **Container Id** 10520035 **Analysis Id** 0000317960

VE Date 04-MAY-14 17:07:38 **Analysis Status** Pass

Gen-IDC Code BN-508 AMWTP Newly Generated Debris **VE Weight** 112.46 lbs.

Closure Date 04-MAY-14 17:07:38 **Procedure Id** INST-FOI-17 **Net Weight** 86.46 lbs.

Container Type 55 **Revision** 27

Operator 1 BRIAN HAWKE **Waste Matrix** S5490 **Summary Category Group** S5000

Operator 2 JUSTIN BURTON **Equipment ID** VE BiD RPCK

General

Rigid Liner Present? No **Liner Type** NO LINER **Closure Method** No Bags

Liner Punctured? Yes **Layers Of Confinement** 0 **Fill Factor** 75 % **Liner Lid Present** No

Liquids

Liquids Present? No **Comment**

Liquid Between Liner and Drum 0 pints **Other Liquids** 0 pints

Containerized Liquid pints **Total Liquid Amount** 0 pints

Internal Container with Liquid 0 pints

Internal Container with Liquid No

Prohibited Liquids Present No

Containerized Liquid

Contents

Sharp Objects? Yes **Are Sharp Objects Protected?** No

	Value	*Comment*
Prohibited Compressed Gas Present?	No	
Explosives Present?	No	
Pyrophorics Present?	No	
Mercury Present?	No	
PCBs Present?	No	
PCB Mass (lbs)	0	
Wet Cell Batteries Present?	No	
Corrosives,Ignitables or Reactives Present?	No	
Beryllium Contaminates Present?	No	
Hazardous-Only Waste Present?	No	
Is Waste Incompatible with backfill, packaging materials, or shipping container materials?	No	
Sealed Containers Over 4L?	No	

IDC Verification

Is IDC correct? Yes **Recommended IDC** -

IDC Change Reason

Visual Exam Comment The remaining waste by weight percent is iron based alloys consisting of scrap metal.

VE Boxline and Repackaging Report

Batch Id VEB14-00146 **Container Id** 10520035 **Analysis Id** 0000317960

Source Container

Is there a source container? Yes

Source Container ID	Location	IDC
10516897	destroyed @ 676- BXI/8	RF-760

IDC CODES

Current Container IDC Code: BN-508 **Recommended IDC Code:** -

Waste Material Items

Packaging Materials

Material Item	Quantity	Unit	Unit Wt	Item Wt(lbs)

Waste Items by Weight

Material Item	Quantity	Unit	Unit Wt	Item Wt(lbs)

Waste Items by Volume

Material Item	Quantity	Unit	Unit Wt	Item Wt(lbs)
Wood	8.000	PINTS	0.702	5.620

Waste Parameters

Waste Parameter	Remaining Weight %	Actual Weight Lbs
Iron-based Metals/Alloys	100.000	80.835
Aluminum-based Metals/Alloys	0.000	0.000
Other metals	0.000	0.000
Other Inorganic Materials	0.000	0.000
Cellulosics	0.000	5.620
Rubber	0.000	0.000
Plastic (Waste Materials)	0.000	0.000
Inorganic matrix	0.000	0.000
Organic matrix	0.000	0.000
Soils/gravel	0.000	0.000
Steel (packaging materials)	0.000	26.000
Plastic (packaging materials)	0.000	0.000
Cellulosics Packaging	0.000	0.000
MLLW Waste	0.000	0.000

Esignature History

Esig Approval Id	User Id	E-signature Date	Comment
2748275	BHAWKE	04-MAY-14 17:07:39	
2748276	JBURTON	04-MAY-14 17:07:41	

Batch Id VEB14-00146 **Container Id** 10519271 **Analysis Id** 0000317961

VE Date 04-MAY-14 17:19:02 **Analysis Status** Pass

Gen-IDC Code BN-508 AMWTP Newly Generated Debris **VE Weight** 160.97 lbs.

Closure Date 04-MAY-14 17:19:02 **Procedure Id** INST-FOI-17 **Net Weight** 134.97 lbs.

Container Type 55 **Revision** 27

Operator 1 SARA FELLOWS **Waste Matrix** S5490 **Summary Category Group** S5000

Operator 2 JOHN CUNNINGHAM **Equipment ID** VE BiD RPCK

General

Rigid Liner Present? No **Liner Type** NO LINER **Closure Method** No Bags

Liner Punctured? Yes **Layers Of Confinement** 0 **Fill Factor** 70 % **Liner Lid Present** No

Liquids

Liquids Present? No **Comment**

Liquid Between Liner and Drum 0 pints **Other Liquids** 0 pints

Containerized Liquid pints **Total Liquid Amount** 0 pints

Internal Container with Liquid 0 pints

Internal Container with Liquid No

Prohibited Liquids Present No

Containerized Liquid

Contents

Sharp Objects? Yes **Are Sharp Objects Protected?** No

	Value	*Comment*
Prohibited Compressed Gas Present?	No	
Explosives Present?	No	
Pyrophorics Present?	No	
Mercury Present?	No	
PCBs Present?	No	
PCB Mass (lbs)	0	
Wet Cell Batteries Present?	No	
Corrosives,Ignitables or Reactives Present?	No	
Beryllium Contaminates Present?	No	
Hazardous-Only Waste Present?	No	
Is Waste Incompatible with backfill, packaging materials, or shipping container materials?	No	
Sealed Containers Over 4L?	No	

IDC Verification

Is IDC correct? Yes **Recommended IDC** -

IDC Change Reason

Visual Exam Comment Remaining waste by weight percent is Iron Based Metals/Alloys consisting of misc. scrap metal.

VE Boxline and Repackaging Report

Batch Id VEB14-00146 **Container Id** 10519271 **Analysis Id** 0000317961

Source Container

Is there a source container? Yes

Source Container ID	Location	IDC
10130758	destroyed @ 676- BXI/16	AE-100

IDC CODES

Current Container IDC Code: BN-508 **Recommended IDC Code:** -

Waste Material Items

Packaging Materials

Material Item	Quantity	Unit	Unit Wt	Item Wt(lbs)

Waste Items by Weight

Material Item	Quantity	Unit	Unit Wt	Item Wt(lbs)

Waste Items by Volume

Material Item	Quantity	Unit	Unit Wt	Item Wt(lbs)
Paper	1.000	PINTS	0.969	0.970
Rubber	2.000	PINTS	1.554	3.110
Copper	1.300	PINTS	9.369	12.180
Plastic	4.000	PINTS	0.937	3.750

Waste Parameters

Waste Parameter	Remaining Weight %	Actual Weight Lbs
Iron-based Metals/Alloys	100.000	114.955
Aluminum-based Metals/Alloys	0.000	0.000
Other metals	0.000	12.180
Other Inorganic Materials	0.000	0.000
Cellulosics	0.000	0.970
Rubber	0.000	3.110
Plastic (Waste Materials)	0.000	3.750
Inorganic matrix	0.000	0.000
Organic matrix	0.000	0.000
Soils/gravel	0.000	0.000
Steel (packaging materials)	0.000	26.000
Plastic (packaging materials)	0.000	0.000
Cellulosics Packaging	0.000	0.000
MLLW Waste	0.000	0.000

Esignature History

Esig Approval Id	User Id	E-signature Date	Comment
2748277	SFELLOWS	04-MAY-14 17:19:02	
2748278	JCUNNINGHAM	04-MAY-14 17:19:04	

Batch Id VEB14-00146 **Container Id** 10519281 **Analysis Id** 0000317962

VE Date 04-MAY-14 17:19:34 **Analysis Status** Pass

Gen-IDC Code BN-508 AMWTP Newly Generated Debris **VE Weight** 103.64 lbs.

Closure Date 04-MAY-14 17:19:34 **Procedure Id** INST-FOI-17 **Net Weight** 77.64 lbs.

Container Type 55 **Revision** 27

Operator 1 BRIAN HAWKE **Waste Matrix** S5490 **Summary Category Group** S5000

Operator 2 JUSTIN BURTON **Equipment ID** VE BiD RPCK

General

Rigid Liner Present? No **Liner Type** NO LINER **Closure Method** No Bags

Liner Punctured? Yes **Layers Of Confinement** 0 **Fill Factor** 75 % **Liner Lid Present** No

Liquids

Liquids Present? No **Comment**

Liquid Between Liner and Drum 0 pints **Other Liquids** 0 pints

Containerized Liquid pints **Total Liquid Amount** 0 pints

Internal Container with Liquid 0 pints

Internal Container with Liquid No

Prohibited Liquids Present No

Containerized Liquid

Contents

Sharp Objects? Yes **Are Sharp Objects Protected?** No

	Value	*Comment*
Prohibited Compressed Gas Present?	No	
Explosives Present?	No	
Pyrophorics Present?	No	
Mercury Present?	No	
PCBs Present?	No	
PCB Mass (lbs)	0	
Wet Cell Batteries Present?	No	
Corrosives,Ignitables or Reactives Present?	No	
Beryllium Contaminates Present?	No	
Hazardous-Only Waste Present?	No	
Is Waste Incompatible with backfill, packaging materials, or shipping container materials?	No	
Sealed Containers Over 4L?	No	

IDC Verification

Is IDC correct? Yes **Recommended IDC** -

IDC Change Reason

Visual Exam Comment The remaining waste by weight percent is iron based alloys consisting of scrap metal.

VE Boxline and Repackaging Report

Batch Id VEB14-00146 **Container Id** 10519281 **Analysis Id** 0000317962

Source Container

Is there a source container? Yes

Source Container ID	Location	IDC
10516897	destroyed @ 676- BXI/8	RF-760

IDC CODES

Current Container IDC Code: BN-508 **Recommended IDC Code:** -

Waste Material Items

Packaging Materials

Material Item	Quantity	Unit	Unit Wt	Item Wt(lbs)

Waste Items by Weight

Material Item	Quantity	Unit	Unit Wt	Item Wt(lbs)

Waste Items by Volume

Material Item	Quantity	Unit	Unit Wt	Item Wt(lbs)
Wood	2.000	PINTS	0.702	1.400
Plastic	1.000	PINTS	0.937	0.940

Waste Parameters

Waste Parameter	Remaining Weight %	Actual Weight Lbs
Iron-based Metals/Alloys	100.000	75.295
Aluminum-based Metals/Alloys	0.000	0.000
Other metals	0.000	0.000
Other Inorganic Materials	0.000	0.000
Cellulosics	0.000	1.400
Rubber	0.000	0.000
Plastic (Waste Materials)	0.000	0.940
Inorganic matrix	0.000	0.000
Organic matrix	0.000	0.000
Soils/gravel	0.000	0.000
Steel (packaging materials)	0.000	26.000
Plastic (packaging materials)	0.000	0.000
Cellulosics Packaging	0.000	0.000
MLLW Waste	0.000	0.000

Esignature History

Esig Approval Id	User Id	E-signature Date	Comment
2748279	BHAWKE	04-MAY-14 17:19:34	
2748281	JBURTON	04-MAY-14 17:19:36	

Batch Id VEB14-00146 **Container Id** 10519378 **Analysis Id** 0000317963

VE Date 04-MAY-14 19:26:45 **Analysis Status** Pass

Gen-IDC Code BN-508 AMWTP Newly Generated Debris **VE Weight** 112.46 lbs.

Closure Date 04-MAY-14 19:26:45 **Procedure Id** INST-FOI-17 **Net Weight** 86.46 lbs.

Container Type 55 **Revision** 27

Operator 1 ANTHONY CAIN **Waste Matrix** S5490 **Summary Category Group** S5000

Operator 2 KEN DOWNS **Equipment ID** VE BiD RPCK

General

Rigid Liner Present? No **Liner Type** NO LINER **Closure Method** No Bags

Liner Punctured? Yes **Layers Of Confinement** 0 **Fill Factor** 68 % **Liner Lid Present** No

Liquids

Liquids Present? No **Comment**

Liquid Between Liner and Drum 0 pints **Other Liquids** 0 pints

Containerized Liquid pints **Total Liquid Amount** 0 pints

Internal Container with Liquid 0 pints

Internal Container with Liquid No

Prohibited Liquids Present No

Containerized Liquid

Contents

Sharp Objects? Yes **Are Sharp Objects Protected?** No

	Value	*Comment*
Prohibited Compressed Gas Present?	No	
Explosives Present?	No	
Pyrophorics Present?	No	
Mercury Present?	No	
PCBs Present?	No	
PCB Mass (lbs)	0	
Wet Cell Batteries Present?	No	
Corrosives,Ignitables or Reactives Present?	No	
Beryllium Contaminates Present?	No	
Hazardous-Only Waste Present?	No	
Is Waste Incompatible with backfill, packaging materials, or shipping container materials?	No	
Sealed Containers Over 4L?	No	

IDC Verification

Is IDC correct? Yes **Recommended IDC** -

IDC Change Reason

Visual Exam Comment Remaining waste by weight percent is Iron based Metals/Alloys consisting of misc. scrap metal.

VE Boxline and Repackaging Report

Batch Id VEB14-00146 **Container Id** 10519378 **Analysis Id** 0000317963

Source Container

Is there a source container? Yes

Source Container ID	Location	IDC
10516897	destroyed @ 676- BXI/8	RF-760

IDC CODES

Current Container IDC Code: BN-508 **Recommended IDC Code:** -

Waste Material Items

Packaging Materials

Material Item	Quantity	Unit	Unit Wt	Item Wt(lbs)

Waste Items by Weight

Material Item	Quantity	Unit	Unit Wt	Item Wt(lbs)

Waste Items by Volume

Material Item	Quantity	Unit	Unit Wt	Item Wt(lbs)
Cardboard	4.000	PINTS	0.833	3.330
Plastic	9.000	PINTS	0.937	8.430

Waste Parameters

Waste Parameter	Remaining Weight %	Actual Weight Lbs
Iron-based Metals/Alloys	100.000	74.695
Aluminum-based Metals/Alloys	0.000	0.000
Other metals	0.000	0.000
Other Inorganic Materials	0.000	0.000
Cellulosics	0.000	3.330
Rubber	0.000	0.000
Plastic (Waste Materials)	0.000	8.430
Inorganic matrix	0.000	0.000
Organic matrix	0.000	0.000
Soils/gravel	0.000	0.000
Steel (packaging materials)	0.000	26.000
Plastic (packaging materials)	0.000	0.000
Cellulosics Packaging	0.000	0.000
MLLW Waste	0.000	0.000

Esignature History

Esig Approval Id	User Id	E-signature Date	Comment
2748320	TCAIN	04-MAY-14 19:26:46	
2748321	KDOWNS	04-MAY-14 19:26:49	

Batch Id VEB14-00146 **Container Id** 10520013 **Analysis Id** 0000317965

VE Date 04-MAY-14 19:55:27 **Analysis Status** Pass

Gen-IDC Code BN-508 AMWTP Newly Generated Debris **VE Weight** 160.97 lbs.

Closure Date 04-MAY-14 19:55:27 **Procedure Id** INST-FOI-17 **Net Weight** 134.97 lbs.

Container Type 55 **Revision** 27

Operator 1 ANTHONY CAIN **Waste Matrix** S5490 **Summary Category Group** S5000

Operator 2 KEN DOWNS **Equipment ID** VE BiD RPCK

General

Rigid Liner Present? No **Liner Type** NO LINER **Closure Method** No Bags

Liner Punctured? Yes **Layers Of Confinement** 0 **Fill Factor** 66 % **Liner Lid Present** No

Liquids

Liquids Present? No **Comment**

Liquid Between Liner and Drum 0 pints **Other Liquids** 0 pints

Containerized Liquid pints **Total Liquid Amount** 0 pints

Internal Container with Liquid 0 pints

Internal Container with Liquid No

Prohibited Liquids Present No

Containerized Liquid

Contents

Sharp Objects? Yes **Are Sharp Objects Protected?** No

	Value	*Comment*
Prohibited Compressed Gas Present?	No	
Explosives Present?	No	
Pyrophorics Present?	No	
Mercury Present?	No	
PCBs Present?	No	
PCB Mass (lbs)	0	
Wet Cell Batteries Present?	No	
Corrosives,Ignitables or Reactives Present?	No	
Beryllium Contaminates Present?	No	
Hazardous-Only Waste Present?	No	
Is Waste Incompatible with backfill, packaging materials, or shipping container materials?	No	
Sealed Containers Over 4L?	No	

IDC Verification

Is IDC correct? Yes **Recommended IDC** -

IDC Change Reason

Visual Exam Comment Remaining waste by weight percent is Iron based Metals/Alloys consisting of misc. scrap metal.

Batch Id VEB14-00146 **Container Id** 10520013 **Analysis Id** 0000317965

Source Container

Is there a source container? Yes

Source Container ID	Location	IDC
10516897	destroyed @ 676- BXI/8	RF-760

IDC CODES

Current Container IDC Code: BN-508 **Recommended IDC Code:** -

Waste Material Items

Packaging Materials

Material Item	Quantity	Unit	Unit Wt	Item Wt(lbs)

Waste Items by Weight

Material Item	Quantity	Unit	Unit Wt	Item Wt(lbs)

Waste Items by Volume

Material Item	Quantity	Unit	Unit Wt	Item Wt(lbs)
Plastic	12.000	PINTS	0.937	11.240

Waste Parameters

Waste Parameter	Remaining Weight %	Actual Weight Lbs
Iron-based Metals/Alloys	100.000	123.725
Aluminum-based Metals/Alloys	0.000	0.000
Other metals	0.000	0.000
Other Inorganic Materials	0.000	0.000
Cellulosics	0.000	0.000
Rubber	0.000	0.000
Plastic (Waste Materials)	0.000	11.240
Inorganic matrix	0.000	0.000
Organic matrix	0.000	0.000
Soils/gravel	0.000	0.000
Steel (packaging materials)	0.000	26.000
Plastic (packaging materials)	0.000	0.000
Cellulosics Packaging	0.000	0.000
MLLW Waste	0.000	0.000

Esignature History

Esig Approval Id	User Id	E-signature Date	Comment
2748330	TCAIN	04-MAY-14 19:55:27	
2748331	KDOWNS	04-MAY-14 19:55:29	

VE Boxline and Repackaging Report

Batch Id VEB14-00146 **Container Id** 10519322 **Analysis Id** 0000317966

VE Date 04-MAY-14 19:59:31 **Analysis Status** Pass

Gen-IDC Code BN-508 AMWTP Newly Generated Debris **VE Weight** 119.07 lbs.

Closure Date 04-MAY-14 19:59:31 **Procedure Id** INST-FOI-17 **Net Weight** 93.07 lbs.

Container Type 55 **Revision** 27

Operator 1 MICHAEL BECK **Waste Matrix** S5490 **Summary Category Group** S5000

Operator 2 GEORGE NALLEY **Equipment ID** VE BiD RPCK

General

Rigid Liner Present? No **Liner Type** NO LINER **Closure Method** No Bags

Liner Punctured? Yes **Layers Of Confinement** 0 **Fill Factor** 65 % **Liner Lid Present** No

Liquids

Liquids Present? No **Comment**

Liquid Between Liner and Drum 0 pints **Other Liquids** 0 pints

Containerized Liquid pints **Total Liquid Amount** 0 pints

Internal Container with Liquid 0 pints

Internal Container with Liquid No

Prohibited Liquids Present No

Containerized Liquid

Contents

Sharp Objects? Yes **Are Sharp Objects Protected?** No

	Value	*Comment*
Prohibited Compressed Gas Present?	No	
Explosives Present?	No	
Pyrophorics Present?	No	
Mercury Present?	No	
PCBs Present?	No	
PCB Mass (lbs)	0	
Wet Cell Batteries Present?	No	
Corrosives,Ignitables or Reactives Present?	No	
Beryllium Contaminates Present?	No	
Hazardous-Only Waste Present?	No	
Is Waste Incompatible with backfill, packaging materials, or shipping container materials?	No	
Sealed Containers Over 4L?	No	

IDC Verification

Is IDC correct? Yes **Recommended IDC** -

IDC Change Reason

Visual Exam Comment Remaining waste by weight percent is Iron Based Metal / Alloy consisting of scrap metal.

Batch Id VEB14-00146 **Container Id** 10519322 **Analysis Id** 0000317966

Source Container

Is there a source container? Yes

Source Container ID	Location	IDC
10130758	destroyed @ 676- BXI/16	AE-100

IDC CODES

Current Container IDC Code: BN-508 **Recommended IDC Code:** -

Waste Material Items

Packaging Materials

Material Item	Quantity	Unit	Unit Wt	Item Wt(lbs)

Waste Items by Weight

Material Item	Quantity	Unit	Unit Wt	Item Wt(lbs)

Waste Items by Volume

Material Item	Quantity	Unit	Unit Wt	Item Wt(lbs)
Paper	1.000	PINTS	0.969	0.970
Plastic	8.000	PINTS	0.937	7.500

Waste Parameters

Waste Parameter	Remaining Weight %	Actual Weight Lbs
Iron-based Metals/Alloys	100.000	84.600
Aluminum-based Metals/Alloys	0.000	0.000
Other metals	0.000	0.000
Other Inorganic Materials	0.000	0.000
Cellulosics	0.000	0.970
Rubber	0.000	0.000
Plastic (Waste Materials)	0.000	7.500
Inorganic matrix	0.000	0.000
Organic matrix	0.000	0.000
Soils/gravel	0.000	0.000
Steel (packaging materials)	0.000	26.000
Plastic (packaging materials)	0.000	0.000
Cellulosics Packaging	0.000	0.000
MLLW Waste	0.000	0.000

Esignature History

Esig Approval Id	User Id	E-signature Date	Comment
2748334	MBECK1	04-MAY-14 19:59:31	
2748335	GNALLEY	04-MAY-14 19:59:33	

Container Id 10520024 **Analysis Id** 0000317967

.1:48 **Analysis Status** Pass

AMWTP Newly Generated Debris **VE Weight** 121.28 lbs.

.1-14 20:11:48 **Procedure Id** INST-FOI-17 **Net Weight** 95.28 lbs.

Revision 27

ANTHONY CAIN **Waste Matrix** S5490 **Summary Category Group** S5000

.1 2 KEN DOWNS **Equipment ID** VE BiD RPCK

General

.iner Present? No **Liner Type** NO LINER **Closure Method** No Bags

.ier Punctured? Yes **Layers Of Confinement** 0 **Fill Factor** 65 % **Liner Lid Present** No

Liquids

Liquids Present? No **Comment**

Liquid Between Liner and Drum 0 pints **Other Liquids** 0 pints

Containerized Liquid pints **Total Liquid Amount** 0 pints

Internal Container with Liquid 0 pints

Internal Container with Liquid No

Prohibited Liquids Present No

Containerized Liquid

Contents

Sharp Objects? Yes **Are Sharp Objects Protected?** No

	Value	*Comment*
Prohibited Compressed Gas Present?	No	
Explosives Present?	No	
Pyrophorics Present?	No	
Mercury Present?	No	
PCBs Present?	No	
PCB Mass (lbs)	0	
Wet Cell Batteries Present?	No	
Corrosives,Ignitables or Reactives Present?	No	
Beryllium Contaminates Present?	No	
Hazardous-Only Waste Present?	No	
Is Waste Incompatible with backfill, packaging materials, or shipping container materials?	No	
Sealed Containers Over 4L?	No	

IDC Verification

Is IDC correct? Yes **Recommended IDC** -

IDC Change Reason

Visual Exam Comment Remaining waste by weight percent is Iron based Metals/Alloys consisting of misc. scrap metal.

Batch Id VEB14-00146 **Container Id** 10520024 **Analysis Id** 0000317967

Source Container

Is there a source container? Yes

Source Container ID	Location	IDC
10516897	destroyed @ 676- BXI/8	RF-760

IDC CODES

Current Container IDC Code: BN-508 **Recommended IDC Code:** -

Waste Material Items

Packaging Materials

Material Item	Quantity	Unit	Unit Wt	Item Wt(lbs)

Waste Items by Weight

Material Item	Quantity	Unit	Unit Wt	Item Wt(lbs)

Waste Items by Volume

Material Item	Quantity	Unit	Unit Wt	Item Wt(lbs)

Waste Parameters

Waste Parameter	Remaining Weight %	Actual Weight Lbs
Iron-based Metals/Alloys	100.000	95.275
Aluminum-based Metals/Alloys	0.000	0.000
Other metals	0.000	0.000
Other Inorganic Materials	0.000	0.000
Cellulosics	0.000	0.000
Rubber	0.000	0.000
Plastic (Waste Materials)	0.000	0.000
Inorganic matrix	0.000	0.000
Organic matrix	0.000	0.000
Soils/gravel	0.000	0.000
Steel (packaging materials)	0.000	26.000
Plastic (packaging materials)	0.000	0.000
Cellulosics Packaging	0.000	0.000
MLLW Waste	0.000	0.000

Esignature History

Esig Approval Id	User Id	E-signature Date	Comment
2748346	TCAIN	04-MAY-14 20:11:49	
2748347	KDOWNS	04-MAY-14 20:11:50	

Batch Id VEB14-00146 **Container Id** 10519989 **Analysis Id** 0000317971

VE Date 04-MAY-14 20:53:13 **Analysis Status** Pass

Gen-IDC Code BN-508 AMWTP Newly Generated Debris **VE Weight** 110.25 lbs.

Closure Date 04-MAY-14 20:53:13 **Procedure Id** INST-FOI-17 **Net Weight** 84.25 lbs.

Container Type 55 **Revision** 27

Operator 1 ANTHONY CAIN **Waste Matrix** S5490 **Summary Category Group** S5000

Operator 2 KEN DOWNS **Equipment ID** VE BiD RPCK

General

Rigid Liner Present? No **Liner Type** NO LINER **Closure Method** No Bags

Liner Punctured? Yes **Layers Of Confinement** 0 **Fill Factor** 67 % **Liner Lid Present** No

Liquids

Liquids Present? No **Comment**

Liquid Between Liner and Drum 0 pints **Other Liquids** 0 pints

Containerized Liquid pints **Total Liquid Amount** 0 pints

Internal Container with Liquid 0 pints

Internal Container with Liquid No

Prohibited Liquids Present No

Containerized Liquid

Contents

Sharp Objects? Yes **Are Sharp Objects Protected?** No

	Value	*Comment*
Prohibited Compressed Gas Present?	No	
Explosives Present?	No	
Pyrophorics Present?	No	
Mercury Present?	No	
PCBs Present?	No	
PCB Mass (lbs)	0	
Wet Cell Batteries Present?	No	
Corrosives,Ignitables or Reactives Present?	No	
Beryllium Contaminates Present?	No	
Hazardous-Only Waste Present?	No	
Is Waste Incompatible with backfill, packaging materials, or shipping container materials?	No	
Sealed Containers Over 4L?	No	

IDC Verification

Is IDC correct? Yes **Recommended IDC** -

IDC Change Reason

Visual Exam Comment Remaining waste by weight percent is Iron based Metals/Alloys consisting of misc. scrap metal.

Batch Id VEB14-00146 **Container Id** 10519989 **Analysis Id** 0000317971

---Source Container---

Is there a source container? Yes

Source Container ID	Location	IDC
10516897	destroyed @ 676- BXI/8	RF-760

---IDC CODES---

Current Container IDC Code: BN-508 **Recommended IDC Code:** -

--- Waste Material Items---

---Packaging Materials---

Material Item	Quantity	Unit	Unit Wt	Item Wt(lbs)

---Waste Items by Weight---

Material Item	Quantity	Unit	Unit Wt	Item Wt(lbs)

---Waste Items by Volume---

Material Item	Quantity	Unit	Unit Wt	Item Wt(lbs)
Wood	4.000	PINTS	0.702	2.810

---Waste Parameters---

Waste Parameter	Remaining Weight %	Actual Weight Lbs
Iron-based Metals/Alloys	100.000	81.440
Aluminum-based Metals/Alloys	0.000	0.000
Other metals	0.000	0.000
Other Inorganic Materials	0.000	0.000
Cellulosics	0.000	2.810
Rubber	0.000	0.000
Plastic (Waste Materials)	0.000	0.000
Inorganic matrix	0.000	0.000
Organic matrix	0.000	0.000
Soils/gravel	0.000	0.000
Steel (packaging materials)	0.000	26.000
Plastic (packaging materials)	0.000	0.000
Cellulosics Packaging	0.000	0.000
MLLW Waste	0.000	0.000

---Esignature History---

Esig Approval Id	User Id	E-signature Date	Comment
2748360	TCAIN	04-MAY-14 20:53:13	
2748361	KDOWNS	04-MAY-14 20:53:15	

Batch Id VEB14-00146 **Container Id** 10519292 **Analysis Id** 0000317972

VE Date 04-MAY-14 21:01:16 **Analysis Status** Pass

Gen-IDC Code BN-508 AMWTP Newly Generated Debris **VE Weight** 149.94 lbs.

Closure Date 04-MAY-14 21:01:16 **Procedure Id** INST-FOI-17 **Net Weight** 123.94 lbs.

Container Type 55 **Revision** 27

Operator 1 MICHAEL BECK **Waste Matrix** S5490 **Summary Category Group** S5000

Operator 2 GEORGE NALLEY **Equipment ID** VE BiD RPCK

General

Rigid Liner Present? No **Liner Type** NO LINER **Closure Method** No Bags

Liner Punctured? Yes **Layers Of Confinement** 0 **Fill Factor** 70 % **Liner Lid Present** No

Liquids

Liquids Present? No **Comment**

Liquid Between Liner and Drum 0 pints **Other Liquids** 0 pints

Containerized Liquid pints **Total Liquid Amount** 0 pints

Internal Container with Liquid 0 pints

Internal Container with Liquid No

Prohibited Liquids Present No

Containerized Liquid

Contents

Sharp Objects? Yes **Are Sharp Objects Protected?** No

	Value	*Comment*
Prohibited Compressed Gas Present?	No	
Explosives Present?	No	
Pyrophorics Present?	No	
Mercury Present?	No	
PCBs Present?	No	
PCB Mass (lbs)	0	
Wet Cell Batteries Present?	No	
Corrosives,Ignitables or Reactives Present?	No	
Beryllium Contaminates Present?	No	
Hazardous-Only Waste Present?	No	
Is Waste Incompatible with backfill, packaging materials, or shipping container materials?	No	
Sealed Containers Over 4L?	No	

IDC Verification

Is IDC correct? Yes **Recommended IDC** -

IDC Change Reason

Visual Exam Comment Remaining waste by weight percent is Iron Based Metal / Alloy consisting of scrap metal.

Batch Id VEB14-00146 **Container Id** 10519292 **Analysis Id** 0000317972

Source Container

Is there a source container? Yes

Source Container ID	Location	IDC
10130758	destroyed @ 676- BXI/16	AE-100

IDC CODES

Current Container IDC Code: BN-508 **Recommended IDC Code:** -

Waste Material Items

Packaging Materials

Material Item	Quantity	Unit	Unit Wt	Item Wt(lbs)

Waste Items by Weight

Material Item	Quantity	Unit	Unit Wt	Item Wt(lbs)

Waste Items by Volume

Material Item	Quantity	Unit	Unit Wt	Item Wt(lbs)
Paper	1.000	PINTS	0.969	0.970
Rubber	1.000	PINTS	1.554	1.550
Plastic	6.000	PINTS	0.937	5.620
Cloth Material	2.000	PINTS	2.000	4.000

Waste Parameters

Waste Parameter	Remaining Weight %	Actual Weight Lbs
Iron-based Metals/Alloys	100.000	111.800
Aluminum-based Metals/Alloys	0.000	0.000
Other metals	0.000	0.000
Other Inorganic Materials	0.000	0.000
Cellulosics	0.000	4.970
Rubber	0.000	1.550
Plastic (Waste Materials)	0.000	5.620
Inorganic matrix	0.000	0.000
Organic matrix	0.000	0.000
Soils/gravel	0.000	0.000
Steel (packaging materials)	0.000	26.000
Plastic (packaging materials)	0.000	0.000
Cellulosics Packaging	0.000	0.000
MLLW Waste	0.000	0.000

Esignature History

Esig Approval Id	User Id	E-signature Date	Comment
2748365	MBECK1	04-MAY-14 21:01:16	
2748366	GNALLEY	04-MAY-14 21:01:18	

Batch Id VEB14-00146 **Container Id** 10520005 **Analysis Id** 0000317973

VE Date 04-MAY-14 21:25:17 **Analysis Status** Pass

Gen-IDC Code BN-508 AMWTP Newly Generated Debris **VE Weight** 160.97 lbs.

Closure Date 04-MAY-14 21:25:17 **Procedure Id** INST-FOI-17 **Net Weight** 134.97 lbs.

Container Type 55 **Revision** 27

Operator 1 ANTHONY CAIN **Waste Matrix** S5490 **Summary Category Group** S5000

Operator 2 KEN DOWNS **Equipment ID** VE BiD RPCK

General

Rigid Liner Present? No **Liner Type** NO LINER **Closure Method** No Bags

Liner Punctured? Yes **Layers Of Confinement** 0 **Fill Factor** 67 % **Liner Lid Present** No

Liquids

Liquids Present? No **Comment**

Liquid Between Liner and Drum 0 pints **Other Liquids** 0 pints

Containerized Liquid pints **Total Liquid Amount** 0 pints

Internal Container with Liquid 0 pints

Internal Container with Liquid No

Prohibited Liquids Present No

Containerized Liquid

Contents

Sharp Objects? Yes **Are Sharp Objects Protected?** No

	Value	*Comment*
Prohibited Compressed Gas Present?	No	
Explosives Present?	No	
Pyrophorics Present?	No	
Mercury Present?	No	
PCBs Present?	No	
PCB Mass (lbs)	0	
Wet Cell Batteries Present?	No	
Corrosives,Ignitables or Reactives Present?	No	
Beryllium Contaminates Present?	No	
Hazardous-Only Waste Present?	No	
Is Waste Incompatible with backfill, packaging materials, or shipping container materials?	No	
Sealed Containers Over 4L?	No	

IDC Verification

Is IDC correct? Yes **Recommended IDC** -

IDC Change Reason

Visual Exam Comment Remaining waste by weight percent is Iron based Metals/Alloys consisting of misc. scrap metal.

Batch Id VEB14-00146 **Container Id** 10520005 **Analysis Id** 0000317973

Source Container

Is there a source container? Yes

Source Container ID	Location	IDC
10516897	destroyed @ 676- BXI/8	RF-760

IDC CODES

Current Container IDC Code: BN-508 **Recommended IDC Code:** -

Waste Material Items

Packaging Materials

Material Item	Quantity	Unit	Unit Wt	Item Wt(lbs)

Waste Items by Weight

Material Item	Quantity	Unit	Unit Wt	Item Wt(lbs)

Waste Items by Volume

Material Item	Quantity	Unit	Unit Wt	Item Wt(lbs)
Wood	9.000	PINTS	0.702	6.320

Waste Parameters

Waste Parameter	Remaining Weight %	Actual Weight Lbs
Iron-based Metals/Alloys	100.000	128.645
Aluminum-based Metals/Alloys	0.000	0.000
Other metals	0.000	0.000
Other Inorganic Materials	0.000	0.000
Cellulosics	0.000	6.320
Rubber	0.000	0.000
Plastic (Waste Materials)	0.000	0.000
Inorganic matrix	0.000	0.000
Organic matrix	0.000	0.000
Soils/gravel	0.000	0.000
Steel (packaging materials)	0.000	26.000
Plastic (packaging materials)	0.000	0.000
Cellulosics Packaging	0.000	0.000
MLLW Waste	0.000	0.000

Esignature History

Esig Approval Id	User Id	E-signature Date	Comment
2748371	TCAIN	04-MAY-14 21:25:18	
2748372	KDOWNS	04-MAY-14 21:25:21	

Batch Id VEB14-00146 **Container Id** 10519383 **Analysis Id** 0000317974

VE Date 04-MAY-14 21:41:50 **Analysis Status** Pass

Gen-IDC Code BN-508 AMWTP Newly Generated Debris **VE Weight** 130.10 lbs.

Closure Date 04-MAY-14 21:41:50 **Procedure Id** INST-FOI-17 **Net Weight** 104.10 lbs.

Container Type 55 **Revision** 27

Operator 1 ANTHONY CAIN **Waste Matrix** S5490 **Summary Category Group** S5000

Operator 2 KEN DOWNS **Equipment ID** VE BiD RPCK

General

Rigid Liner Present? No **Liner Type** NO LINER **Closure Method** No Bags

Liner Punctured? Yes **Layers Of Confinement** 0 **Fill Factor** 68 % **Liner Lid Present** No

Liquids

Liquids Present? No **Comment**

Liquid Between Liner and Drum 0 pints **Other Liquids** 0 pints

Containerized Liquid pints **Total Liquid Amount** 0 pints

Internal Container with Liquid 0 pints

Internal Container with Liquid No

Prohibited Liquids Present No

Containerized Liquid

Contents

Sharp Objects? Yes **Are Sharp Objects Protected?** No

	Value	*Comment*
Prohibited Compressed Gas Present?	No	
Explosives Present?	No	
Pyrophorics Present?	No	
Mercury Present?	No	
PCBs Present?	No	
PCB Mass (lbs)	0	
Wet Cell Batteries Present?	No	
Corrosives,Ignitables or Reactives Present?	No	
Beryllium Contaminates Present?	No	
Hazardous-Only Waste Present?	No	
Is Waste Incompatible with backfill, packaging materials, or shipping container materials?	No	
Sealed Containers Over 4L?	No	

IDC Verification

Is IDC correct? Yes **Recommended IDC** -

IDC Change Reason

Visual Exam Comment Remaining waste by weight percent is Iron based Metals/Alloys consisting of misc. scrap metal.

Batch Id VEB14-00146 **Container Id** 10519383 **Analysis Id** 0000317974

Source Container

Is there a source container? Yes

Source Container ID	Location	IDC
10516897	destroyed @ 676- BXI/8	RF-760

IDC CODES

Current Container IDC Code: BN-508 **Recommended IDC Code:** -

Waste Material Items

Packaging Materials

Material Item	Quantity	Unit	Unit Wt	Item Wt(lbs)

Waste Items by Weight

Material Item	Quantity	Unit	Unit Wt	Item Wt(lbs)

Waste Items by Volume

Material Item	Quantity	Unit	Unit Wt	Item Wt(lbs)
Wood	5.000	PINTS	0.702	3.510
Plastic	3.000	PINTS	0.937	2.810

Waste Parameters

Waste Parameter	Remaining Weight %	Actual Weight Lbs
Iron-based Metals/Alloys	100.000	97.775
Aluminum-based Metals/Alloys	0.000	0.000
Other metals	0.000	0.000
Other Inorganic Materials	0.000	0.000
Cellulosics	0.000	3.510
Rubber	0.000	0.000
Plastic (Waste Materials)	0.000	2.810
Inorganic matrix	0.000	0.000
Organic matrix	0.000	0.000
Soils/gravel	0.000	0.000
Steel (packaging materials)	0.000	26.000
Plastic (packaging materials)	0.000	0.000
Cellulosics Packaging	0.000	0.000
MLLW Waste	0.000	0.000

Esignature History

Esig Approval Id	User Id	E-signature Date	Comment
2748380	TCAIN	04-MAY-14 21:41:51	
2748381	KDOWNS	04-MAY-14 21:41:53	

Batch Id VEB14-00146 **Container Id** 10520008 **Analysis Id** 0000317975

VE Date 04-MAY-14 21:52:26 **Analysis Status** Pass

Gen-IDC Code BN-508 AMWTP Newly Generated Debris **VE Weight** 152.15 lbs.

Closure Date 04-MAY-14 21:52:26 **Procedure Id** INST-FOI-17 **Net Weight** 126.15 lbs.

Container Type 55 **Revision** 27

Operator 1 ANTHONY CAIN **Waste Matrix** S5490 **Summary Category Group** S5000

Operator 2 KEN DOWNS **Equipment ID** VE BiD RPCK

General

Rigid Liner Present? No **Liner Type** NO LINER **Closure Method** No Bags

Liner Punctured? Yes **Layers Of Confinement** 0 **Fill Factor** 65 % **Liner Lid Present** No

Liquids

Liquids Present? No **Comment**

Liquid Between Liner and Drum 0 pints **Other Liquids** 0 pints

Containerized Liquid pints **Total Liquid Amount** 0 pints

Internal Container with Liquid 0 pints

Internal Container with Liquid No

Prohibited Liquids Present No

Containerized Liquid

Contents

Sharp Objects? Yes **Are Sharp Objects Protected?** No

	Value	*Comment*
Prohibited Compressed Gas Present?	No	
Explosives Present?	No	
Pyrophorics Present?	No	
Mercury Present?	No	
PCBs Present?	No	
PCB Mass (lbs)	0	
Wet Cell Batteries Present?	No	
Corrosives,Ignitables or Reactives Present?	No	
Beryllium Contaminates Present?	No	
Hazardous-Only Waste Present?	No	
Is Waste Incompatible with backfill, packaging materials, or shipping container materials?	No	
Sealed Containers Over 4L?	No	

IDC Verification

Is IDC correct? Yes **Recommended IDC** -

IDC Change Reason

Visual Exam Comment Remaining waste by weight percent is Plastic (Waste Material) consisting of plastic bags, sheeting and tape.

Batch Id VEB14-00146 **Container Id** 10520008 **Analysis Id** 0000317975

Source Container

Is there a source container? Yes

Source Container ID	Location	IDC
10516897	destroyed @ 676- BXI/8	RF-760

IDC CODES

Current Container IDC Code: BN-508 **Recommended IDC Code:** -

Waste Material Items

Packaging Materials

Material Item	Quantity	Unit	Unit Wt	Item Wt(lbs)

Waste Items by Weight

Material Item	Quantity	Unit	Unit Wt	Item Wt(lbs)

Waste Items by Volume

Material Item	Quantity	Unit	Unit Wt	Item Wt(lbs)
Iron	1.000	PINTS	7.807	7.810

Waste Parameters

Waste Parameter	Remaining Weight %	Actual Weight Lbs
Iron-based Metals/Alloys	0.000	7.810
Aluminum-based Metals/Alloys	0.000	0.000
Other metals	0.000	0.000
Other Inorganic Materials	0.000	0.000
Cellulosics	0.000	0.000
Rubber	0.000	0.000
Plastic (Waste Materials)	100.000	118.335
Inorganic matrix	0.000	0.000
Organic matrix	0.000	0.000
Soils/gravel	0.000	0.000
Steel (packaging materials)	0.000	26.000
Plastic (packaging materials)	0.000	0.000
Cellulosics Packaging	0.000	0.000
MLLW Waste	0.000	0.000

Esignature History

Esig Approval Id	User Id	E-signature Date	Comment
2748384	TCAIN	04-MAY-14 21:52:26	
2748385	KDOWNS	04-MAY-14 21:52:28	

Batch Id VEB14-00146 **Container Id** 10520002 **Analysis Id** 0000317976

VE Date 04-MAY-14 22:06:40 **Analysis Status** Pass

Gen-IDC Code BN-508 AMWTP Newly Generated Debris **VE Weight** 200.66 lbs.

Closure Date 04-MAY-14 22:06:40 **Procedure Id** INST-FOI-17 **Net Weight** 174.66 lbs.

Container Type 55 **Revision** 27

Operator 1 ANTHONY CAIN **Waste Matrix** S5490 **Summary Category Group** S5000

Operator 2 KEN DOWNS **Equipment ID** VE BiD RPCK

General

Rigid Liner Present? No **Liner Type** NO LINER **Closure Method** No Bags

Liner Punctured? Yes **Layers Of Confinement** 0 **Fill Factor** 65 % **Liner Lid Present** No

Liquids

Liquids Present? No **Comment**

Liquid Between Liner and Drum 0 pints **Other Liquids** 0 pints

Containerized Liquid pints **Total Liquid Amount** 0 pints

Internal Container with Liquid 0 pints

Internal Container with Liquid No

Prohibited Liquids Present No

Containerized Liquid

Contents

Sharp Objects? Yes **Are Sharp Objects Protected?** No

	Value	*Comment*
Prohibited Compressed Gas Present?	No	
Explosives Present?	No	
Pyrophorics Present?	No	
Mercury Present?	No	
PCBs Present?	No	
PCB Mass (lbs)	0	
Wet Cell Batteries Present?	No	
Corrosives,Ignitables or Reactives Present?	No	
Beryllium Contaminates Present?	No	
Hazardous-Only Waste Present?	No	
Is Waste Incompatible with backfill, packaging materials, or shipping container materials?	No	
Sealed Containers Over 4L?	No	

IDC Verification

Is IDC correct? Yes **Recommended IDC** -

IDC Change Reason

Visual Exam Comment Remaining waste by weight percent is Iron based Metals/Alloys consisting of misc. scrap metal.

Batch Id VEB14-00146 **Container Id** 10520002 **Analysis Id** 0000317976

Source Container

Is there a source container? Yes

Source Container ID	Location	IDC
10516897	destroyed @ 676- BXI/8	RF-760

IDC CODES

Current Container IDC Code: BN-508 **Recommended IDC Code:** -

Waste Material Items

Packaging Materials

Material Item	Quantity	Unit	Unit Wt	Item Wt(lbs)

Waste Items by Weight

Material Item	Quantity	Unit	Unit Wt	Item Wt(lbs)

Waste Items by Volume

Material Item	Quantity	Unit	Unit Wt	Item Wt(lbs)
Plastic	8.000	PINTS	0.937	7.500

Waste Parameters

Waste Parameter	Remaining Weight %	Actual Weight Lbs
Iron-based Metals/Alloys	100.000	167.155
Aluminum-based Metals/Alloys	0.000	0.000
Other metals	0.000	0.000
Other Inorganic Materials	0.000	0.000
Cellulosics	0.000	0.000
Rubber	0.000	0.000
Plastic (Waste Materials)	0.000	7.500
Inorganic matrix	0.000	0.000
Organic matrix	0.000	0.000
Soils/gravel	0.000	0.000
Steel (packaging materials)	0.000	26.000
Plastic (packaging materials)	0.000	0.000
Cellulosics Packaging	0.000	0.000
MLLW Waste	0.000	0.000

Esignature History

Esig Approval Id	User Id	E-signature Date	Comment
2748393	TCAIN	04-MAY-14 22:06:40	
2748394	KDOWNS	04-MAY-14 22:06:41	

Batch Id VEB14-00146 **Container Id** 10519382 **Analysis Id** 0000317977

VE Date 04-MAY-14 22:16:10 **Analysis Status** Pass

Gen-IDC Code BN-508 AMWTP Newly Generated Debris **VE Weight** 183.02 lbs.

Closure Date 04-MAY-14 22:16:10 **Procedure Id** INST-FOI-17 **Net Weight** 157.02 lbs.

Container Type 55 **Revision** 27

Operator 1 MICHAEL BECK **Waste Matrix** S5490 **Summary Category Group** S5000

Operator 2 GEORGE NALLEY **Equipment ID** VE BiD RPCK

General

Rigid Liner Present? No **Liner Type** NO LINER **Closure Method** No Bags

Liner Punctured? Yes **Layers Of Confinement** 0 **Fill Factor** 75 % **Liner Lid Present** No

Liquids

Liquids Present? No **Comment**

Liquid Between Liner and Drum 0 pints **Other Liquids** 0 pints

Containerized Liquid pints **Total Liquid Amount** 0 pints

Internal Container with Liquid 0 pints

Internal Container with Liquid No

Prohibited Liquids Present No

Containerized Liquid

Contents

Sharp Objects? Yes **Are Sharp Objects Protected?** No

	Value	*Comment*
Prohibited Compressed Gas Present?	No	
Explosives Present?	No	
Pyrophorics Present?	No	
Mercury Present?	No	
PCBs Present?	No	
PCB Mass (lbs)	0	
Wet Cell Batteries Present?	No	
Corrosives,Ignitables or Reactives Present?	No	
Beryllium Contaminates Present?	No	
Hazardous-Only Waste Present?	No	
Is Waste Incompatible with backfill, packaging materials, or shipping container materials?	No	
Sealed Containers Over 4L?	No	

IDC Verification

Is IDC correct? Yes **Recommended IDC** -

IDC Change Reason

Visual Exam Comment Remaining waste by weight percent is Iron Based Metal / Alloy consisting of scrap metal.

Batch Id VEB14-00146 **Container Id** 10519382 **Analysis Id** 0000317977

Source Container

Is there a source container? Yes

Source Container ID	Location	IDC
10130758	destroyed @ 676- BXI/16	AE-100

IDC CODES

Current Container IDC Code: BN-508 **Recommended IDC Code:** -

Waste Material Items

Packaging Materials

Material Item	Quantity	Unit	Unit Wt	Item Wt(lbs)

Waste Items by Weight

Material Item	Quantity	Unit	Unit Wt	Item Wt(lbs)

Waste Items by Volume

Material Item	Quantity	Unit	Unit Wt	Item Wt(lbs)
Paper	1.000	PINTS	0.969	0.970
Rubber	1.000	PINTS	1.554	1.550
Plastic	3.000	PINTS	0.937	2.810
Floor Sweepings	2.000	PINTS	1.000	2.000

Waste Parameters

Waste Parameter	Remaining Weight %	Actual Weight Lbs
Iron-based Metals/Alloys	100.000	149.685
Aluminum-based Metals/Alloys	0.000	0.000
Other metals	0.000	0.000
Other Inorganic Materials	0.000	2.000
Cellulosics	0.000	0.970
Rubber	0.000	1.550
Plastic (Waste Materials)	0.000	2.810
Inorganic matrix	0.000	0.000
Organic matrix	0.000	0.000
Soils/gravel	0.000	0.000
Steel (packaging materials)	0.000	26.000
Plastic (packaging materials)	0.000	0.000
Cellulosics Packaging	0.000	0.000
MLLW Waste	0.000	0.000

Esignature History

Esig Approval Id	User Id	E-signature Date	Comment
2748401	MBECK1	04-MAY-14 22:16:10	
2748402	GNALLEY	04-MAY-14 22:16:12	

Batch Id VEB14-00146 **Container Id** 10519361 **Analysis Id** 0000317979

VE Date 04-MAY-14 22:18:36 **Analysis Status** Pass

Gen-IDC Code BN-508 AMWTP Newly Generated Debris **VE Weight** 94.82 lbs.

Closure Date 04-MAY-14 22:18:36 **Procedure Id** INST-FOI-17 **Net Weight** 68.82 lbs.

Container Type 55 **Revision** 27

Operator 1 ANTHONY CAIN **Waste Matrix** S5490 **Summary Category Group** S5000

Operator 2 KEN DOWNS **Equipment ID** VE BiD RPCK

General

Rigid Liner Present? No **Liner Type** NO LINER **Closure Method** No Bags

Liner Punctured? Yes **Layers Of Confinement** 0 **Fill Factor** 70 % **Liner Lid Present** No

Liquids

Liquids Present? No **Comment**

Liquid Between Liner and Drum 0 pints **Other Liquids** 0 pints

Containerized Liquid pints **Total Liquid Amount** 0 pints

Internal Container with Liquid 0 pints

Internal Container with Liquid No

Prohibited Liquids Present No

Containerized Liquid

Contents

Sharp Objects? No **Are Sharp Objects Protected?** Yes

	Value	*Comment*
Prohibited Compressed Gas Present?	No	
Explosives Present?	No	
Pyrophorics Present?	No	
Mercury Present?	No	
PCBs Present?	No	
PCB Mass (lbs)	0	
Wet Cell Batteries Present?	No	
Corrosives,Ignitables or Reactives Present?	No	
Beryllium Contaminates Present?	No	
Hazardous-Only Waste Present?	No	
Is Waste Incompatible with backfill, packaging materials, or shipping container materials?	No	
Sealed Containers Over 4L?	No	

IDC Verification

Is IDC correct? Yes **Recommended IDC** -

IDC Change Reason

Visual Exam Comment Remaining waste by weight percent is Cellullosics consisting of cardboard, misc. paper and wood.

Batch Id VEB14-00146 **Container Id** 10519361 **Analysis Id** 0000317979

Source Container

Is there a source container? Yes

Source Container ID	Location	IDC
10516897	destroyed @ 676- BXI/8	RF-760

IDC CODES

Current Container IDC Code: BN-508 **Recommended IDC Code:** -

Waste Material Items

Packaging Materials

Material Item	Quantity	Unit	Unit Wt	Item Wt(lbs)

Waste Items by Weight

Material Item	Quantity	Unit	Unit Wt	Item Wt(lbs)

Waste Items by Volume

Material Item	Quantity	Unit	Unit Wt	Item Wt(lbs)

Waste Parameters

Waste Parameter	Remaining Weight %	Actual Weight Lbs
Iron-based Metals/Alloys	0.000	0.000
Aluminum-based Metals/Alloys	0.000	0.000
Other metals	0.000	0.000
Other Inorganic Materials	0.000	0.000
Cellulosics	100.000	68.815
Rubber	0.000	0.000
Plastic (Waste Materials)	0.000	0.000
Inorganic matrix	0.000	0.000
Organic matrix	0.000	0.000
Soils/gravel	0.000	0.000
Steel (packaging materials)	0.000	26.000
Plastic (packaging materials)	0.000	0.000
Cellulosics Packaging	0.000	0.000
MLLW Waste	0.000	0.000

Esignature History

Esig Approval Id	User Id	E-signature Date	Comment
2748404	TCAIN	04-MAY-14 22:18:36	
2748405	KDOWNS	04-MAY-14 22:18:38	

Batch Id VEB14-00146 **Container Id** 10519994 **Analysis Id** 0000317980

VE Date 04-MAY-14 22:32:57 **Analysis Status** Pass

Gen-IDC Code BN-508 AMWTP Newly Generated Debris **VE Weight** 127.89 lbs.

Closure Date 04-MAY-14 22:32:57 **Procedure Id** INST-FOI-17 **Net Weight** 101.89 lbs.

Container Type 55 **Revision** 27

Operator 1 ANTHONY CAIN **Waste Matrix** S5490 **Summary Category Group** S5000

Operator 2 KEN DOWNS **Equipment ID** VE BiD RPCK

General

Rigid Liner Present? No **Liner Type** NO LINER **Closure Method** No Bags

Liner Punctured? Yes **Layers Of Confinement** 0 **Fill Factor** 68 % **Liner Lid Present** No

Liquids

Liquids Present? No **Comment**

Liquid Between Liner and Drum 0 pints **Other Liquids** 0 pints

Containerized Liquid pints **Total Liquid Amount** 0 pints

Internal Container with Liquid 0 pints

Internal Container with Liquid No

Prohibited Liquids Present No

Containerized Liquid

Contents

Sharp Objects? No **Are Sharp Objects Protected?** Yes

	Value	*Comment*
Prohibited Compressed Gas Present?	No	
Explosives Present?	No	
Pyrophorics Present?	No	
Mercury Present?	No	
PCBs Present?	No	
PCB Mass (lbs)	0	
Wet Cell Batteries Present?	No	
Corrosives,Ignitables or Reactives Present?	No	
Beryllium Contaminates Present?	No	
Hazardous-Only Waste Present?	No	
Is Waste Incompatible with backfill, packaging materials, or shipping container materials?	No	
Sealed Containers Over 4L?	No	

IDC Verification

Is IDC correct? Yes **Recommended IDC** -

IDC Change Reason

Visual Exam Comment Remaining waste by weight percent is Cellullosics consisting of cardboard, misc. paper and wood.

AMWTP

Advanced Mixed Waste Treatment Project

AMWTP

VE Boxline and Repackaging Report

Date: 26-Sep-2014

Time: 14:17

Batch Id VEB14-00146 **Container Id** 10519994 **Analysis Id** 0000317980

---Source Container---

Is there a source container? Yes

Source Container ID	Location	IDC
10516897	destroyed @ 676- BXI/8	RF-760

---IDC CODES---

Current Container IDC Code: BN-508 **Recommended IDC Code:** -

--- Waste Material Items---

---Packaging Materials---

Material Item	Quantity	Unit	Unit Wt	Item Wt(lbs)

---Waste Items by Weight---

Material Item	Quantity	Unit	Unit Wt	Item Wt(lbs)

---Waste Items by Volume---

Material Item	Quantity	Unit	Unit Wt	Item Wt(lbs)
Plastic	4.000	PINTS	0.937	3.750

---Waste Parameters---

Waste Parameter	Remaining Weight %	Actual Weight Lbs
Iron-based Metals/Alloys	0.000	0.000
Aluminum-based Metals/Alloys	0.000	0.000
Other metals	0.000	0.000
Other Inorganic Materials	0.000	0.000
Cellulosics	100.000	98.140
Rubber	0.000	0.000
Plastic (Waste Materials)	0.000	3.750
Inorganic matrix	0.000	0.000
Organic matrix	0.000	0.000
Soils/gravel	0.000	0.000
Steel (packaging materials)	0.000	26.000
Plastic (packaging materials)	0.000	0.000
Cellulosics Packaging	0.000	0.000
MLLW Waste	0.000	0.000

---Esignature History---

Esig Approval Id	User Id	E-signature Date	Comment
2748407	TCAIN	04-MAY-14 22:32:57	
2748408	KDOWNS	04-MAY-14 22:32:59	

-----End of VE Boxline Report-----

AMWTP
Advanced Mixed Waste Treatment Project

AMWTP
Checklist Report

Date: 26-Sep-2014
Time: 14:16

Batch Id VEB14-00146 **Open Date** 04-MAY-14 **Close Date** 04-MAY-14

Reviewer CRAIG SIMMONS **Approval Level** Independent Technical Reviewer
Approval Date 05-MAY-14 **Review Iteration** 1

Question Text	Answer	Requirement	Comment
1. Is the QA documentation for the Batch Data Reports complete and includes data reports and QC results? o VE Batch Coversheet o Table of Contents (manual review only) o VE Analysis Reports o Analytical Balance Calibration Check Sheet (Form-1215), if applicable (manual review only) o ITR Checklist (Form-1415, manual review only) o Batch Data Report Supplemental Comment Form (Form-1491, manual review only) o Associated NCRs (referenced in WTS) o Audio/Video Recording References, if applicable	Yes		
2. Are there 20 containers or less in the batch?	Yes		
3. Was each VE Operator qualified at the time of the VE event?	Yes		
4. Was a VE data form completed for each container in the batch?	Yes		
Was the data generated in a technically correct manner using the correct revision of INST-OI-34, Non-facility Visual Examination or INST-FOI-17, Facility Visual Examination Operations, as applicable.	Yes		
6. Was the correct revision of the procedure documented on each analysis report?	Yes		
7. Was the E-signature History review performed?	Yes		
8. Was guidance from VEE documented, as applicable?	N/A		Not applicable for this VEB batch.
9. Does every drum reported in the batch have a valid audio/video recording (as applicable)?	N/A		Not applicable for this VEB batch.
10. Does the physical form match the waste stream description, waste matrix code and IDC?	Yes		
11. Did the VE event result in an IDC/Waste Matrix Code change? If so, was an NCR initiated?	No		
12. Were the waste material parameters documented correctly?	Yes		
13. Was the presence or absence of prohibited items properly identified? o If prohibited items were identified, were NCRs initiated?	Yes		
14. Has the description of rigid liners and layers of confinement been properly documented?	Yes		
15. Was the drum age criteria (DAC) entered correctly and completely? o Closure Method(s) o Liner Puncture Status o Layers of Confinement o Closure Date o Packaging Configuration o Type and number of filters, as applicable o Liner hole presence and diameter, as applicable	Yes		
16. Have filters been installed or removed from drum as recorded in WTS, as applicable?	N/A		Not applicable for this VEB batch.
17. Hand calculations and unit conversions are correct? o Does the packaging weight plus the net weight equal the gross weight of the drum in the estimated waste material parameters, and for the unit conversions that are entered by volume or weight?	Yes		
18. Were all units and significant figures used correct for all reported volumes/weights?	Yes		
19. Has the data been reviewed for transcription errors as	Yes		

Batch Id VEB14-00146 **Open Date** 04-MAY-14 **Close Date** 04-MAY-14

Reviewer CRAIG SIMMONS **Approval Level** Independent Technical Reviewer
Approval Date 05-MAY-14 **Review Iteration** 1

Question Text	Answer	Requirement	Comment
appropriate?			
20. Were the Visual Examination QAOs met? o Precision o Accuracy o Completeness o Comparability	Yes		
21. Is each data form signed by qualified VE Operators, as applicable per the appropriate procedure being used?	Yes		
22. Was the audio/video check satisfactory, as applicable?	N/A		Not applicable for this VEB batch.
23. Was the scale or balance check weight event satisfactory, as applicable?	N/A		Not applicable for this VEB batch.
24. Are the QC weight checks within the tolerance of the scale or balance, as applicable?	N/A		Not applicable for this VEB batch.
25. Were any NCRs generated for drums containing prohibited items or any nonconforming conditions that failed to meet DQOs or QAOs? o Include the NCRs as appropriate, in the Batch Data Report.	No		
26. Were the rework requirements clearly identified in WTS or on the BDR?	N/A		No rework was identified for this batch.

Batch Id VEB14-00146 **Open Date** 04-MAY-14 **Close Date** 04-MAY-14

Reviewer NICK STYHL **Approval Level** SPM Data Validation

Approval Date 07-MAY-14 **Review Iteration** 1

Question Text	Answer	Requirement	Comment
(1) Has the batch received a Data Generation Level Independent Technical Review?	Yes	MP-TRUW-8.2, C3-10b(1)	
(2) Are the batch data review checklists complete?	Yes	MP-TRUW-8.2, C3-10b(1)	
(3) When identified, were PCBs, mercury, lead, or other hazardous contaminants consistent with the waste stream AK Summary Report(s) and/or AK documentation?	N/A	MP-TRUW-8.2, C4-3	None identified.
(4) Are any ignitable, corrosive, or reactive wastes identified?	No	MP-TRUW-8.2, C4-3	
(5) Are the packaging configurations identified on the VE consistent with the waste stream AK Summary Report(s) and/or AK documentation?	Yes	MP-TRUW-8.2, C4-3	
(6) Do the drums in this batch contain typical waste items consistent with waste stream AK Summary Report(s) and/or AK documentation?	Yes	MP-TRUW-8.2, C4-3	
(7) Are the Waste Matrix Codes and physical form descriptions consistent with AK?	Yes	MP-TRUW-8.2, C4-3	
(8) Have all AK discrepancies been resolved and have all AK Resolution checklists been approved? Reference all waste stream AK documentation used in review of this data package.	N/A	MP-TRUW-8.2, C4-3	No discrepancies. MP-TRUW-05, MP-TRUW-06
(9) Does the batch report identify the correct implementing procedure number and revision number used for this testing method?	Yes	MP-TRUW-8.2, C3-4 and Table C3-11	
(10) Have the Waste Matrix Code (WMC) and IDC for all drums in the batch remained the same as originally assigned by the historical designation? NOTE: If not, note the drum number in the comment field and notify the Acceptable Knowledge Expert (AKE) if an NCR does not exist for the WMC and IDC change.	Yes	MP-TRUW-8.2, C-3c and C1-4	The IDC/WMC and summary category for newly generated waste are assigned by the operators during the VE event.
(11) Does the physical form of the waste match the WMC, waste stream description, and identify the absence of prohibited items?	Yes	MP-TRUW-8.2, C-3c and C1-4	
(12) If observable liquids exist in the drum, is an estimate of quantity given?	N/A	MP-TRUW-8.2, C-3c and C1-4	No residual liquids exist.
(13) Precision: Have all discrepancies been reconciled between the operator and the ITR with regard to identification of WMC, liquids in excess of TSDF-WAC limits, and compressed gases?	Yes	MP-TRUW-8.2 C3-4b	
(14) Accuracy: Have all operators passed a comprehensive examination and demonstrated satisfactory performance in the presence of the VE expert during initial and subsequent qualifications?	Yes	MP-TRUW-8.2 C3-4b	
(15) Completeness: Has a validated VE data form been obtained for 100% of the waste containers subject to VE?	Yes	MP-TRUW-8.2 C3-4b	
(16) Comparability: Has the comparability of VE data from different operators been enhanced by use of standardized VE procedures and operator qualifications?	Yes	MP-TRUW-8.2 C3-4b	
(17) Does the data for all containers within this batch meet the review, validation, and verification requirements? · Are proper units (e.g. Liters or pounds) and significant figure used? · Is the BDR complete (all pages identified in the BDR and numbered according)? - VE Batch Coversheet - Table of Contents (manual review only) - VE Analysis Reports - Analytical Balance Calibration Checklist (if applicable) - ITR Checklist (Form-1415)	Yes	MP-TRUW-8.2, C3-10b and Table C3-11	

Batch Id VEB14-00146 **Open Date** 04-MAY-14 **Close Date** 04-MAY-14

Reviewer NICK STYHL **Approval Level** SPM Data Validation

Approval Date 07-MAY-14 **Review Iteration** 1

Question Text	Answer	Requirement	Comment
- Associated NCRs - Audio/Video Recordings (if applicable)			
(18) Do the drum reports contain the (a) Batch Data Report number and date, (b) waste container number (c)WMC, (d) implementing procedure and revision, (e) audio/video recording reference, (f) audio and video QC checks were performed and satisfactory, (g) verification that the physical form matches the waste stream description and WMC, (h) absence of prohibited items, (i) gross container weight, (j) waste material parameter weights, and (k) signature and date of examination (signatures of both operators when applicable)?	Yes	MP-TRUW-8.2, C1-4 and Table C3-11	Audio/Video recording and QC checks reference not applicable.
(19) Is the description of container contents detailed enough to provide verification of estimated weights for the waste matrix parameters identified?	Yes	MP-TRUW-8.2, C1-4 and Table C3-11	
(20) Is there a valid second weight check for every 10 items?	N/A	MP-TRUW-8.2, C1-4	Scales were not used during this VE event.
(21) Verification of two operator signatures when doing VE?	Yes	MP-TRUW-8.2, C-3d(1) and Table C3-11	
(22) Are there 20 or fewer containers in the batch?	Yes	MP-TRUW-8.2, C1-3 and C3-10	
(23) Review all NCRs (open and closed). Can the batch be approved?	Yes	MP-TRUW-8.2, C3-13	
(24) All data associated with this BDR is acceptable for signature release?	Yes	MP-TRUW-8.2, C3-10b and C3-10b(1)	

Batch Id VEB14-00146 **Open Date** 04-MAY-14 **Close Date** 04-MAY-14

Esignature History

Esig Approval ID	User ID	Esig Date	Approval Level	Comments
2750467	NSTYHL	07-MAY-14	SPM	Approve batch.
2749081	CSIMMONS	05-MAY-14	ITR	Promoted batch to SPM level.

AMWTP
Advanced Mixed Waste Treatment Project

AMWTP

Non-Conformance Report

Date: 26-Sep-2014

Time: 14:22

*****Batch NCR(s)*****

Batch Type	VEB	Batch ID	VEB14-00146		
Trackwise Number		**Status**	**Opened Date**	**Closed Date**	

*****Container NCR(s)*****

Container ID *or related Batch ID*	Trackwise Number	Status	Opened Date	Closed Date

*****End of Non-Conformance Report*****

AMWTP
Advanced Mixed Waste Treatment Project

AMWTP

Scale Check Event Report

Date: 26-Sep-2014

Time: 14:22

Batch Id	VEB14-00146	**Container Id**	10519320
Batch Id	VEB14-00146	**Container Id**	10520005
Batch Id	VEB14-00146	**Container Id**	10519280
Batch Id	VEB14-00146	**Container Id**	10519989
Batch Id	VEB14-00146	**Container Id**	10519994
Batch Id	VEB14-00146	**Container Id**	10519361
Batch Id	VEB14-00146	**Container Id**	10520035
Batch Id	VEB14-00146	**Container Id**	10519271
Batch Id	VEB14-00146	**Container Id**	10519272
Batch Id	VEB14-00146	**Container Id**	10520013
Batch Id	VEB14-00146	**Container Id**	10519322
Batch Id	VEB14-00146	**Container Id**	10519383
Batch Id	VEB14-00146	**Container Id**	10520008
Batch Id	VEB14-00146	**Container Id**	10519382
Batch Id	VEB14-00146	**Container Id**	10519281
Batch Id	VEB14-00146	**Container Id**	10519378
Batch Id	VEB14-00146	**Container Id**	10520024
Batch Id	VEB14-00146	**Container Id**	10519292
Batch Id	VEB14-00146	**Container Id**	10519279
Batch Id	VEB14-00146	**Container Id**	10520002

DIVIDER

PAGE

AMWTP

Advanced Mixed Waste Treatment Project

AMWTP

Batch Report Coversheet

Date: 26-Sep-2014

Time: 14:43

Batch Type VE Boxline

Batch Report No. VEB14-00180

Batch Id VEB14-00180

Open Date 30-MAY-14 22:36:40

Close Date 31-MAY-14 14:46:24

Batch Status AP

INFORMATION ONLY

Test Facility Idaho AMWTP

Equipment Id VE BiD RPCK VE Box Repackaging Into Drums

Container Id	IDC	Analysis Id	Date Examined	QC Type	Analysis Status	Operator
10522075	BN-508	0000319059	30-MAY-14 22:36:40	Original	P	GUY MATLOCK
10522157	BN-508	0000319060	30-MAY-14 23:37:20	Original	P	GUY MATLOCK
10522095	BN-508	0000319061	30-MAY-14 23:53:07	Original	P	GUY MATLOCK
10522156	BN-508	0000319062	31-MAY-14 01:35:20	Original	P	GUY MATLOCK
10522071	BN-508	0000319063	31-MAY-14 01:54:46	Original	P	GUY MATLOCK
10522159	BN-508	0000319064	31-MAY-14 02:16:40	Original	P	GUY MATLOCK
10522149	BN-508	0000319065	31-MAY-14 02:36:50	Original	P	GUY MATLOCK
10522169	BN-508	0000319066	31-MAY-14 02:56:01	Original	P	GUY MATLOCK
10522147	BN-508	0000319075	31-MAY-14 04:11:24	Original	P	GUY MATLOCK
10522178	BN-508	0000319077	31-MAY-14 04:24:18	Original	P	GUY MATLOCK
10522083	BN-508	0000319083	31-MAY-14 04:40:11	Original	P	GUY MATLOCK
10522152	BN-508	0000319086	31-MAY-14 04:57:25	Original	P	GUY MATLOCK
10522074	BN-508	0000319088	31-MAY-14 10:31:50	Original	P	JEFFREY K BAILEY
10522150	BN-508	0000319090	31-MAY-14 10:55:08	Original	P	JEFFREY K BAILEY
10522168	BN-508	0000319092	31-MAY-14 11:22:24	Original	P	JEFFREY K BAILEY
10522171	BN-508	0000319093	31-MAY-14 12:58:27	Original	P	JEFFREY K BAILEY
10522086	BN-508	0000319094	31-MAY-14 13:12:39	Original	P	JEFFREY K BAILEY
10522163	BN-508	0000319095	31-MAY-14 13:31:04	Original	P	JEFFREY K BAILEY
10522080	BN-508	0000319096	31-MAY-14 14:12:32	Original	P	JEFFREY K BAILEY
10522161	BN-508	0000319097	31-MAY-14 14:45:24	Original	P	JEFFREY K BAILEY

**********Batch Comments**********

Written By	Date	Comment
RGRISE	01-JUN-14 07:17:22	Initial validation performed electronically per MP-TRUW-8.8
RGRISE	01-JUN-14 07:17:23	Promote batch to SPM level.
SCANIFF	05-JUN-14 11:02:04	Promote.

AMWTP

Batch Report Coversheet

Date: 26-Sep-2014

Time: 14:43

**********Batch E-Signature History**********

Approval ID	User ID	Signature Date	Comment
2767386	RGRISE	01-JUN-2014 07:17:23	Promote batch to SPM level.
2770267	SCANIFF	05-JUN-2014 11:02:04	Promote.

***** End of Batch Report Coversheet Report *****

AMWTP
Advanced Mixed Waste Treatment Project

AMWTP

VE Boxline and Repackaging Report

Date: 26-Sep-2014

Time: 14:45

Batch Id VEB14-00180 **Container Id** 10522075 **Analysis Id** 0000319059

VE Date 30-MAY-14 22:36:40 **Analysis Status** Pass

Gen-IDC Code BN-508 AMWTP Newly Generated Debris **VE Weight** 156.56 lbs.

Closure Date 30-MAY-14 22:36:40 **Procedure Id** INST-FOI-17 **Net Weight** 130.56 lbs.

Container Type 55 **Revision** 27

Operator 1 GUY MATLOCK **Waste Matrix** S5490 **Summary Category Group** S5000

Operator 2 SHIRLEY PEREZ **Equipment ID** VE BiD RPCK

General

Rigid Liner Present? No **Liner Type** NO LINER **Closure Method** No Bags

Liner Punctured? Yes **Layers Of Confinement** 0 **Fill Factor** 45 % **Liner Lid Present** No

Liquids

Liquids Present? No **Comment**

Liquid Between Liner and Drum 0 pints **Other Liquids** 0 pints

Containerized Liquid pints **Total Liquid Amount** 0 pints

Internal Container with Liquid 0 pints

Internal Container with Liquid No

Prohibited Liquids Present No

Containerized Liquid

Contents

Sharp Objects? Yes **Are Sharp Objects Protected?** No

	Value	*Comment*
Prohibited Compressed Gas Present?	No	
Explosives Present?	No	
Pyrophorics Present?	No	
Mercury Present?	No	
PCBs Present?	No	
PCB Mass (lbs)	0	
Wet Cell Batteries Present?	No	
Corrosives,Ignitables or Reactives Present?	No	
Beryllium Contaminates Present?	No	
Hazardous-Only Waste Present?	No	
Is Waste Incompatible with backfill, packaging materials, or shipping container materials?	No	
Sealed Containers Over 4L?	No	

IDC Verification

Is IDC correct? Yes **Recommended IDC** -

IDC Change Reason

Visual Exam Comment The remaining waste by weight percent is Iron-based Metals/Alloys consisting of misc. scrap metal.

Batch Id VEB14-00180 **Container Id** 10522075 **Analysis Id** 0000319059

Source Container

Is there a source container? Yes

Source Container ID	Location	IDC
10520809	destroyed @ 676- BXI/9	RF-760

IDC CODES

Current Container IDC Code: BN-508 **Recommended IDC Code:** -

Waste Material Items

Packaging Materials

Material Item	Quantity	Unit	Unit Wt	Item Wt(lbs)

Waste Items by Weight

Material Item	Quantity	Unit	Unit Wt	Item Wt(lbs)

Waste Items by Volume

Material Item	Quantity	Unit	Unit Wt	Item Wt(lbs)
Rubber	1.000	PINTS	1.554	1.550
Wood	13.000	PINTS	0.702	9.130
Plastic	3.000	PINTS	0.937	2.810

Waste Parameters

Waste Parameter	Remaining Weight %	Actual Weight Lbs
Iron-based Metals/Alloys	100.000	117.065
Aluminum-based Metals/Alloys	0.000	0.000
Other metals	0.000	0.000
Other Inorganic Materials	0.000	0.000
Cellulosics	0.000	9.130
Rubber	0.000	1.550
Plastic (Waste Materials)	0.000	2.810
Inorganic matrix	0.000	0.000
Organic matrix	0.000	0.000
Soils/gravel	0.000	0.000
Steel (packaging materials)	0.000	26.000
Plastic (packaging materials)	0.000	0.000
Cellulosics Packaging	0.000	0.000
MLLW Waste	0.000	0.000

Esignature History

Esig Approval Id	User Id	E-signature Date	Comment
2766599	GMATLOCK	30-MAY-14 22:36:40	
2766600	SPEREZ	30-MAY-14 22:36:42	

Batch Id VEB14-00180 **Container Id** 10522157 **Analysis Id** 0000319060

VE Date 30-MAY-14 23:37:20 **Analysis Status** Pass

Gen-IDC Code BN-508 AMWTP Newly Generated Debris **VE Weight** 183.02 lbs.

Closure Date 30-MAY-14 23:37:20 **Procedure Id** INST-FOI-17 **Net Weight** 157.02 lbs.

Container Type 55 **Revision** 27

Operator 1 GUY MATLOCK **Waste Matrix** S5490 **Summary Category Group** S5000

Operator 2 SHIRLEY PEREZ **Equipment ID** VE BiD RPCK

General

Rigid Liner Present? No **Liner Type** NO LINER **Closure Method** No Bags

Liner Punctured? Yes **Layers Of Confinement** 0 **Fill Factor** 45 % **Liner Lid Present** No

Liquids

Liquids Present? No **Comment**

Liquid Between Liner and Drum 0 pints **Other Liquids** 0 pints

Containerized Liquid pints **Total Liquid Amount** 0 pints

Internal Container with Liquid 0 pints

Internal Container with Liquid No

Prohibited Liquids Present No

Containerized Liquid

Contents

Sharp Objects? Yes **Are Sharp Objects Protected?** No

	Value	*Comment*
Prohibited Compressed Gas Present?	No	
Explosives Present?	No	
Pyrophorics Present?	No	
Mercury Present?	No	
PCBs Present?	No	
PCB Mass (lbs)	0	
Wet Cell Batteries Present?	No	
Corrosives,Ignitables or Reactives Present?	No	
Beryllium Contaminates Present?	No	
Hazardous-Only Waste Present?	No	
Is Waste Incompatible with backfill, packaging materials, or shipping container materials?	No	
Sealed Containers Over 4L?	No	

IDC Verification

Is IDC correct? Yes **Recommended IDC** -

IDC Change Reason

Visual Exam Comment The remaining waste by weight percent is Iron-based Metals/Alloys consisting of misc. scrap metal.

Batch Id VEB14-00180 **Container Id** 10522157 **Analysis Id** 0000319060

Source Container

Is there a source container? Yes

Source Container ID	Location	IDC
10520809	destroyed @ 676- BXI/9	RF-760

IDC CODES

Current Container IDC Code: BN-508 **Recommended IDC Code:** -

Waste Material Items

Packaging Materials

Material Item	Quantity	Unit	Unit Wt	Item Wt(lbs)

Waste Items by Weight

Material Item	Quantity	Unit	Unit Wt	Item Wt(lbs)

Waste Items by Volume

Material Item	Quantity	Unit	Unit Wt	Item Wt(lbs)
Wood	7.000	PINTS	0.702	4.910
Plastic	6.000	PINTS	0.937	5.620
Floor Sweepings	3.000	PINTS	1.000	3.000

Waste Parameters

Waste Parameter	Remaining Weight %	Actual Weight Lbs
Iron-based Metals/Alloys	100.000	143.485
Aluminum-based Metals/Alloys	0.000	0.000
Other metals	0.000	0.000
Other Inorganic Materials	0.000	3.000
Cellulosics	0.000	4.910
Rubber	0.000	0.000
Plastic (Waste Materials)	0.000	5.620
Inorganic matrix	0.000	0.000
Organic matrix	0.000	0.000
Soils/gravel	0.000	0.000
Steel (packaging materials)	0.000	26.000
Plastic (packaging materials)	0.000	0.000
Cellulosics Packaging	0.000	0.000
MLLW Waste	0.000	0.000

Esignature History

Esig Approval Id	User Id	E-signature Date	Comment
2766626	GMATLOCK	30-MAY-14 23:37:20	
2766627	SPEREZ	30-MAY-14 23:37:24	

Batch Id VEB14-00180 **Container Id** 10522095 **Analysis Id** 0000319061

VE Date 30-MAY-14 23:53:07 **Analysis Status** Pass

Gen-IDC Code BN-508 AMWTP Newly Generated Debris **VE Weight** 242.55 lbs.

Closure Date 30-MAY-14 23:53:07 **Procedure Id** INST-FOI-17 **Net Weight** 216.55 lbs.

Container Type 55 **Revision** 27

Operator 1 GUY MATLOCK **Waste Matrix** S5490 **Summary Category Group** S5000

Operator 2 SHIRLEY PEREZ **Equipment ID** VE BiD RPCK

General

Rigid Liner Present? No **Liner Type** NO LINER **Closure Method** No Bags

Liner Punctured? Yes **Layers Of Confinement** 0 **Fill Factor** 50 % **Liner Lid Present** No

Liquids

Liquids Present? No **Comment**

Liquid Between Liner and Drum 0 pints **Other Liquids** 0 pints

Containerized Liquid pints **Total Liquid Amount** 0 pints

Internal Container with Liquid 0 pints

Internal Container with Liquid No

Prohibited Liquids Present No

Containerized Liquid

Contents

Sharp Objects? Yes **Are Sharp Objects Protected?** No

	Value	*Comment*
Prohibited Compressed Gas Present?	No	
Explosives Present?	No	
Pyrophorics Present?	No	
Mercury Present?	No	
PCBs Present?	No	
PCB Mass (lbs)	0	
Wet Cell Batteries Present?	No	
Corrosives,Ignitables or Reactives Present?	No	
Beryllium Contaminates Present?	No	
Hazardous-Only Waste Present?	No	
Is Waste Incompatible with backfill, packaging materials, or shipping container materials?	No	
Sealed Containers Over 4L?	No	

IDC Verification

Is IDC correct? Yes **Recommended IDC** -

IDC Change Reason

Visual Exam Comment The remaining waste by weight percent is Iron-based Metals/Alloys and other metals consisting of misc. scrap metal and lead.

Batch Id VEB14-00180 **Container Id** 10522095 **Analysis Id** 0000319061

Source Container

Is there a source container? Yes

Source Container ID	Location	IDC
10520809	destroyed @ 676- BXI/9	RF-760

IDC CODES

Current Container IDC Code: BN-508 **Recommended IDC Code:** -

Waste Material Items

Packaging Materials

Material Item	Quantity	Unit	Unit Wt	Item Wt(lbs)

Waste Items by Weight

Material Item	Quantity	Unit	Unit Wt	Item Wt(lbs)

Waste Items by Volume

Material Item	Quantity	Unit	Unit Wt	Item Wt(lbs)
Wood	12.000	PINTS	0.702	8.420
Plastic	3.000	PINTS	0.937	2.810
Floor Sweepings	3.000	PINTS	1.000	3.000

Waste Parameters

Waste Parameter	Remaining Weight %	Actual Weight Lbs
Iron-based Metals/Alloys	50.000	101.160
Aluminum-based Metals/Alloys	0.000	0.000
Other metals	50.000	101.160
Other Inorganic Materials	0.000	3.000
Cellulosics	0.000	8.420
Rubber	0.000	0.000
Plastic (Waste Materials)	0.000	2.810
Inorganic matrix	0.000	0.000
Organic matrix	0.000	0.000
Soils/gravel	0.000	0.000
Steel (packaging materials)	0.000	26.000
Plastic (packaging materials)	0.000	0.000
Cellulosics Packaging	0.000	0.000
MLLW Waste	0.000	0.000

Esignature History

Esig Approval Id	User Id	E-signature Date	Comment
2766628	GMATLOCK	30-MAY-14 23:53:08	
2766629	SPEREZ	30-MAY-14 23:53:10	

Batch Id VEB14-00180 **Container Id** 10522156 **Analysis Id** 0000319062

VE Date 31-MAY-14 01:35:20 **Analysis Status** Pass

Gen-IDC Code BN-508 AMWTP Newly Generated Debris **VE Weight** 242.55 lbs.

Closure Date 31-MAY-14 01:35:20 **Procedure Id** INST-FOI-17 **Net Weight** 216.55 lbs.

Container Type 55 **Revision** 27

Operator 1 GUY MATLOCK **Waste Matrix** S5490 **Summary Category Group** S5000

Operator 2 SHIRLEY PEREZ **Equipment ID** VE BiD RPCK

General

Rigid Liner Present? No **Liner Type** NO LINER **Closure Method** No Bags

Liner Punctured? Yes **Layers Of Confinement** 0 **Fill Factor** 45 % **Liner Lid Present** No

Liquids

Liquids Present? No **Comment**

Liquid Between Liner and Drum 0 pints **Other Liquids** 0 pints

Containerized Liquid pints **Total Liquid Amount** 0 pints

Internal Container with Liquid 0 pints

Internal Container with Liquid No

Prohibited Liquids Present No

Containerized Liquid

Contents

Sharp Objects? Yes **Are Sharp Objects Protected?** No

	Value	*Comment*
Prohibited Compressed Gas Present?	No	
Explosives Present?	No	
Pyrophorics Present?	No	
Mercury Present?	No	
PCBs Present?	No	
PCB Mass (lbs)	0	
Wet Cell Batteries Present?	No	
Corrosives,Ignitables or Reactives Present?	No	
Beryllium Contaminates Present?	No	
Hazardous-Only Waste Present?	No	
Is Waste Incompatible with backfill, packaging materials, or shipping container materials?	No	
Sealed Containers Over 4L?	No	

IDC Verification

Is IDC correct? Yes **Recommended IDC** -

IDC Change Reason

Visual Exam Comment The remaining waste by weight percent is Other Metals and Iron-based Metals/Alloys consisting of Lead and misc. scrap metal.

Batch Id VEB14-00180 **Container Id** 10522156 **Analysis Id** 0000319062

Source Container

Is there a source container? Yes

Source Container ID	Location	IDC
10520809	destroyed @ 676- BXI/9	RF-760

IDC CODES

Current Container IDC Code: BN-508 **Recommended IDC Code:** -

Waste Material Items

Packaging Materials

Material Item	Quantity	Unit	Unit Wt	Item Wt(lbs)

Waste Items by Weight

Material Item	Quantity	Unit	Unit Wt	Item Wt(lbs)

Waste Items by Volume

Material Item	Quantity	Unit	Unit Wt	Item Wt(lbs)
Wood	15.000	PINTS	0.702	10.530

Waste Parameters

Waste Parameter	Remaining Weight %	Actual Weight Lbs
Iron-based Metals/Alloys	30.000	61.806
Aluminum-based Metals/Alloys	0.000	0.000
Other metals	70.000	144.214
Other Inorganic Materials	0.000	0.000
Cellulosics	0.000	10.530
Rubber	0.000	0.000
Plastic (Waste Materials)	0.000	0.000
Inorganic matrix	0.000	0.000
Organic matrix	0.000	0.000
Soils/gravel	0.000	0.000
Steel (packaging materials)	0.000	26.000
Plastic (packaging materials)	0.000	0.000
Cellulosics Packaging	0.000	0.000
MLLW Waste	0.000	0.000

Esignature History

Esig Approval Id	User Id	E-signature Date	Comment
2766635	GMATLOCK	31-MAY-14 01:35:20	
2766636	SPEREZ	31-MAY-14 01:35:22	

Batch Id VEB14-00180 **Container Id** 10522071 **Analysis Id** 0000319063

VE Date 31-MAY-14 01:54:46 **Analysis Status** Pass

Gen-IDC Code BN-508 AMWTP Newly Generated Debris **VE Weight** 123.48 lbs.

Closure Date 31-MAY-14 01:54:46 **Procedure Id** INST-FOI-17 **Net Weight** 97.48 lbs.

Container Type 55 **Revision** 27

Operator 1 GUY MATLOCK **Waste Matrix** S5490 **Summary Category Group** S5000

Operator 2 SHIRLEY PEREZ **Equipment ID** VE BiD RPCK

General

Rigid Liner Present? No **Liner Type** NO LINER **Closure Method** No Bags

Liner Punctured? Yes **Layers Of Confinement** 0 **Fill Factor** 45 % **Liner Lid Present** No

Liquids

Liquids Present? No **Comment**

Liquid Between Liner and Drum 0 pints **Other Liquids** 0 pints

Containerized Liquid pints **Total Liquid Amount** 0 pints

Internal Container with Liquid 0 pints

Internal Container with Liquid No

Prohibited Liquids Present No

Containerized Liquid

Contents

Sharp Objects? Yes **Are Sharp Objects Protected?** No

	Value	*Comment*
Prohibited Compressed Gas Present?	No	
Explosives Present?	No	
Pyrophorics Present?	No	
Mercury Present?	No	
PCBs Present?	No	
PCB Mass (lbs)	0	
Wet Cell Batteries Present?	No	
Corrosives,Ignitables or Reactives Present?	No	
Beryllium Contaminates Present?	No	
Hazardous-Only Waste Present?	No	
Is Waste Incompatible with backfill, packaging materials, or shipping container materials?	No	
Sealed Containers Over 4L?	No	

IDC Verification

Is IDC correct? Yes **Recommended IDC** -

IDC Change Reason

Visual Exam Comment The remaining waste by weight percent is Iron-based Metals/Alloys consisting of misc. scrap metal.

VE Boxline and Repackaging Report

Batch Id VEB14-00180 **Container Id** 10522071 **Analysis Id** 0000319063

Source Container

Is there a source container? Yes

Source Container ID	Location	IDC
10520809	destroyed @ 676- BXI/9	RF-760

IDC CODES

Current Container IDC Code: BN-508 **Recommended IDC Code:** -

Waste Material Items

Packaging Materials

Material Item	Quantity	Unit	Unit Wt	Item Wt(lbs)

Waste Items by Weight

Material Item	Quantity	Unit	Unit Wt	Item Wt(lbs)

Waste Items by Volume

Material Item	Quantity	Unit	Unit Wt	Item Wt(lbs)
Wood	10.000	PINTS	0.702	7.020
Plastic	3.000	PINTS	0.937	2.810
Floor Sweepings	2.000	PINTS	1.000	2.000

Waste Parameters

Waste Parameter	Remaining Weight %	Actual Weight Lbs
Iron-based Metals/Alloys	100.000	85.650
Aluminum-based Metals/Alloys	0.000	0.000
Other metals	0.000	0.000
Other Inorganic Materials	0.000	2.000
Cellulosics	0.000	7.020
Rubber	0.000	0.000
Plastic (Waste Materials)	0.000	2.810
Inorganic matrix	0.000	0.000
Organic matrix	0.000	0.000
Soils/gravel	0.000	0.000
Steel (packaging materials)	0.000	26.000
Plastic (packaging materials)	0.000	0.000
Cellulosics Packaging	0.000	0.000
MLLW Waste	0.000	0.000

Esignature History

Esig Approval Id	User Id	E-signature Date	Comment
2766639	GMATLOCK	31-MAY-14 01:54:46	
2766640	SPEREZ	31-MAY-14 01:54:48	

Batch Id VEB14-00180 **Container Id** 10522159 **Analysis Id** 0000319064

VE Date 31-MAY-14 02:16:40 **Analysis Status** Pass

Gen-IDC Code BN-508 AMWTP Newly Generated Debris **VE Weight** 249.17 lbs.

Closure Date 31-MAY-14 02:16:40 **Procedure Id** INST-FOI-17 **Net Weight** 223.17 lbs.

Container Type 55 **Revision** 27

Operator 1 GUY MATLOCK **Waste Matrix** S5490 **Summary Category Group** S5000

Operator 2 SHIRLEY PEREZ **Equipment ID** VE BiD RPCK

General

Rigid Liner Present? No **Liner Type** NO LINER **Closure Method** No Bags

Liner Punctured? Yes **Layers Of Confinement** 0 **Fill Factor** 55 % **Liner Lid Present** No

Liquids

Liquids Present? No **Comment**

Liquid Between Liner and Drum 0 pints **Other Liquids** 0 pints

Containerized Liquid pints **Total Liquid Amount** 0 pints

Internal Container with Liquid 0 pints

Internal Container with Liquid No

Prohibited Liquids Present No

Containerized Liquid

Contents

Sharp Objects? Yes **Are Sharp Objects Protected?** No

	Value	*Comment*
Prohibited Compressed Gas Present?	No	
Explosives Present?	No	
Pyrophorics Present?	No	
Mercury Present?	No	
PCBs Present?	No	
PCB Mass (lbs)	0	
Wet Cell Batteries Present?	No	
Corrosives,Ignitables or Reactives Present?	No	
Beryllium Contaminates Present?	No	
Hazardous-Only Waste Present?	No	
Is Waste Incompatible with backfill, packaging materials, or shipping container materials?	No	
Sealed Containers Over 4L?	No	

IDC Verification

Is IDC correct? Yes **Recommended IDC** -

IDC Change Reason

Visual Exam Comment The remaining waste by weight percent is Iron-based Metals/Alloys consisting of misc. scrap metal.

VE Boxline and Repackaging Report

Batch Id VEB14-00180 **Container Id** 10522159 **Analysis Id** 0000319064

Source Container

Is there a source container? Yes

Source Container ID	Location	IDC
10520809	destroyed @ 676- BXI/9	RF-760

IDC CODES

Current Container IDC Code: BN-508 **Recommended IDC Code:** -

Waste Material Items

Packaging Materials

Material Item	Quantity	Unit	Unit Wt	Item Wt(lbs)

Waste Items by Weight

Material Item	Quantity	Unit	Unit Wt	Item Wt(lbs)

Waste Items by Volume

Material Item	Quantity	Unit	Unit Wt	Item Wt(lbs)
Wood	10.000	PINTS	0.702	7.020
Plastic	4.000	PINTS	0.937	3.750
Floor Sweepings	3.000	PINTS	1.000	3.000

Waste Parameters

Waste Parameter	Remaining Weight %	Actual Weight Lbs
Iron-based Metals/Alloys	100.000	209.395
Aluminum-based Metals/Alloys	0.000	0.000
Other metals	0.000	0.000
Other Inorganic Materials	0.000	3.000
Cellulosics	0.000	7.020
Rubber	0.000	0.000
Plastic (Waste Materials)	0.000	3.750
Inorganic matrix	0.000	0.000
Organic matrix	0.000	0.000
Soils/gravel	0.000	0.000
Steel (packaging materials)	0.000	26.000
Plastic (packaging materials)	0.000	0.000
Cellulosics Packaging	0.000	0.000
MLLW Waste	0.000	0.000

Esignature History

Esig Approval Id	User Id	E-signature Date	Comment
2766643	GMATLOCK	31-MAY-14 02:16:40	
2766644	SPEREZ	31-MAY-14 02:16:42	

Batch Id VEB14-00180 **Container Id** 10522149 **Analysis Id** 0000319065

VE Date 31-MAY-14 02:36:50 **Analysis Status** Pass

Gen-IDC Code BN-508 AMWTP Newly Generated Debris **VE Weight** 138.92 lbs.

Closure Date 31-MAY-14 02:36:50 **Procedure Id** INST-FOI-17 **Net Weight** 112.92 lbs.

Container Type 55 **Revision** 27

Operator 1 GUY MATLOCK **Waste Matrix** S5490 **Summary Category Group** S5000

Operator 2 SHIRLEY PEREZ **Equipment ID** VE BiD RPCK

General

Rigid Liner Present? No **Liner Type** NO LINER **Closure Method** No Bags

Liner Punctured? Yes **Layers Of Confinement** 0 **Fill Factor** 45 % **Liner Lid Present** No

Liquids

Liquids Present? No **Comment**

Liquid Between Liner and Drum 0 pints **Other Liquids** 0 pints

Containerized Liquid pints **Total Liquid Amount** 0 pints

Internal Container with Liquid 0 pints

Internal Container with Liquid No

Prohibited Liquids Present No

Containerized Liquid

Contents

Sharp Objects? Yes **Are Sharp Objects Protected?** No

	Value	*Comment*
Prohibited Compressed Gas Present?	No	
Explosives Present?	No	
Pyrophorics Present?	No	
Mercury Present?	No	
PCBs Present?	No	
PCB Mass (lbs)	0	
Wet Cell Batteries Present?	No	
Corrosives,Ignitables or Reactives Present?	No	
Beryllium Contaminates Present?	No	
Hazardous-Only Waste Present?	No	
Is Waste Incompatible with backfill, packaging materials, or shipping container materials?	No	
Sealed Containers Over 4L?	No	

IDC Verification

Is IDC correct? Yes **Recommended IDC** -

IDC Change Reason

Visual Exam Comment The remaining waste by weight percent is Iron-based Metals/Alloys consisting of misc. scrap metal.

Batch Id VEB14-00180 **Container Id** 10522149 **Analysis Id** 0000319065

Source Container

Is there a source container? Yes

Source Container ID	Location	IDC
10520809	destroyed @ 676- BXI/9	RF-760

IDC CODES

Current Container IDC Code: BN-508 **Recommended IDC Code:** -

Waste Material Items

Packaging Materials

Material Item	Quantity	Unit	Unit Wt	Item Wt(lbs)

Waste Items by Weight

Material Item	Quantity	Unit	Unit Wt	Item Wt(lbs)

Waste Items by Volume

Material Item	Quantity	Unit	Unit Wt	Item Wt(lbs)
Rubber	1.000	PINTS	1.554	1.550
Plastic	3.000	PINTS	0.937	2.810
Floor Sweepings	5.000	PINTS	1.000	5.000

Waste Parameters

Waste Parameter	Remaining Weight %	Actual Weight Lbs
Iron-based Metals/Alloys	100.000	103.555
Aluminum-based Metals/Alloys	0.000	0.000
Other metals	0.000	0.000
Other Inorganic Materials	0.000	5.000
Cellulosics	0.000	0.000
Rubber	0.000	1.550
Plastic (Waste Materials)	0.000	2.810
Inorganic matrix	0.000	0.000
Organic matrix	0.000	0.000
Soils/gravel	0.000	0.000
Steel (packaging materials)	0.000	26.000
Plastic (packaging materials)	0.000	0.000
Cellulosics Packaging	0.000	0.000
MLLW Waste	0.000	0.000

Esignature History

Esig Approval Id	User Id	E-signature Date	Comment
2766649	GMATLOCK	31-MAY-14 02:36:51	
2766650	SPEREZ	31-MAY-14 02:36:53	

Batch Id VEB14-00180 **Container Id** 10522169 **Analysis Id** 0000319066

VE Date 31-MAY-14 02:56:01 **Analysis Status** Pass

Gen-IDC Code BN-508 AMWTP Newly Generated Debris **VE Weight** 138.92 **lbs.**

Closure Date 31-MAY-14 02:56:01 **Procedure Id** INST-FOI-17 **Net Weight** 112.92 **lbs.**

Container Type 55 **Revision** 27

Operator 1 GUY MATLOCK **Waste Matrix** S5490 **Summary Category Group** S5000

Operator 2 SHIRLEY PEREZ **Equipment ID** VE BiD RPCK

General

Rigid Liner Present? No **Liner Type** NO LINER **Closure Method** No Bags

Liner Punctured? Yes **Layers Of Confinement** 0 **Fill Factor** 40 % **Liner Lid Present** No

Liquids

Liquids Present? No **Comment**

Liquid Between Liner and Drum 0 pints **Other Liquids** 0 pints

Containerized Liquid pints **Total Liquid Amount** 0 pints

Internal Container with Liquid 0 pints

Internal Container with Liquid No

Prohibited Liquids Present No

Containerized Liquid

Contents

Sharp Objects? Yes **Are Sharp Objects Protected?** No

	Value	*Comment*
Prohibited Compressed Gas Present?	No	
Explosives Present?	No	
Pyrophorics Present?	No	
Mercury Present?	No	
PCBs Present?	No	
PCB Mass (lbs)	0	
Wet Cell Batteries Present?	No	
Corrosives,Ignitables or Reactives Present?	No	
Beryllium Contaminates Present?	No	
Hazardous-Only Waste Present?	No	
Is Waste Incompatible with backfill, packaging materials, or shipping container materials?	No	
Sealed Containers Over 4L?	No	

IDC Verification

Is IDC correct? Yes **Recommended IDC** -

IDC Change Reason

Visual Exam Comment The remaining waste by weight percent is Iron-based Metals/Alloys consisting of misc. scrap metal.

Batch Id VEB14-00180 **Container Id** 10522169 **Analysis Id** 0000319066

Source Container

Is there a source container? Yes

Source Container ID	Location	IDC
10520809	destroyed @ 676- BXI/9	RF-760

IDC CODES

Current Container IDC Code: BN-508 **Recommended IDC Code:** -

Waste Material Items

Packaging Materials

Material Item	Quantity	Unit	Unit Wt	Item Wt(lbs)

Waste Items by Weight

Material Item	Quantity	Unit	Unit Wt	Item Wt(lbs)

Waste Items by Volume

Material Item	Quantity	Unit	Unit Wt	Item Wt(lbs)
Plastic	2.000	PINTS	0.937	1.870

Waste Parameters

Waste Parameter	Remaining Weight %	Actual Weight Lbs
Iron-based Metals/Alloys	100.000	111.045
Aluminum-based Metals/Alloys	0.000	0.000
Other metals	0.000	0.000
Other Inorganic Materials	0.000	0.000
Cellulosics	0.000	0.000
Rubber	0.000	0.000
Plastic (Waste Materials)	0.000	1.870
Inorganic matrix	0.000	0.000
Organic matrix	0.000	0.000
Soils/gravel	0.000	0.000
Steel (packaging materials)	0.000	26.000
Plastic (packaging materials)	0.000	0.000
Cellulosics Packaging	0.000	0.000
MLLW Waste	0.000	0.000

Esignature History

Esig Approval Id	User Id	E-signature Date	Comment
2766653	GMATLOCK	31-MAY-14 02:56:02	
2766654	SPEREZ	31-MAY-14 02:56:04	

Batch Id VEB14-00180 **Container Id** 10522147 **Analysis Id** 0000319075

VE Date 31-MAY-14 04:11:24 **Analysis Status** Pass

Gen-IDC Code BN-508 AMWTP Newly Generated Debris **VE Weight** 134.51 lbs.

Closure Date 31-MAY-14 04:11:24 **Procedure Id** INST-FOI-17 **Net Weight** 108.51 lbs.

Container Type 55 **Revision** 27

Operator 1 GUY MATLOCK **Waste Matrix** S5490 **Summary Category Group** S5000

Operator 2 SHIRLEY PEREZ **Equipment ID** VE BiD RPCK

General

Rigid Liner Present? No **Liner Type** NO LINER **Closure Method** No Bags

Liner Punctured? Yes **Layers Of Confinement** 0 **Fill Factor** 40 % **Liner Lid Present** No

Liquids

Liquids Present? No **Comment**

Liquid Between Liner and Drum 0 pints **Other Liquids** 0 pints

Containerized Liquid pints **Total Liquid Amount** 0 pints

Internal Container with Liquid 0 pints

Internal Container with Liquid No

Prohibited Liquids Present No

Containerized Liquid

Contents

Sharp Objects? Yes **Are Sharp Objects Protected?** No

	Value	*Comment*
Prohibited Compressed Gas Present?	No	
Explosives Present?	No	
Pyrophorics Present?	No	
Mercury Present?	No	
PCBs Present?	No	
PCB Mass (lbs)	0	
Wet Cell Batteries Present?	No	
Corrosives,Ignitables or Reactives Present?	No	
Beryllium Contaminates Present?	No	
Hazardous-Only Waste Present?	No	
Is Waste Incompatible with backfill, packaging materials, or shipping container materials?	No	
Sealed Containers Over 4L?	No	

IDC Verification

Is IDC correct? Yes **Recommended IDC** -

IDC Change Reason

Visual Exam Comment The remaining waste by weight percent is Iron-based Metals/Alloys consisting of misc. scrap metal.

Batch Id VEB14-00180 **Container Id** 10522147 **Analysis Id** 0000319075

Source Container

Is there a source container? Yes

Source Container ID	Location	IDC
10520809	destroyed @ 676- BXI/9	RF-760

IDC CODES

Current Container IDC Code: BN-508 **Recommended IDC Code:** -

Waste Material Items

Packaging Materials

Material Item	Quantity	Unit	Unit Wt	Item Wt(lbs)

Waste Items by Weight

Material Item	Quantity	Unit	Unit Wt	Item Wt(lbs)

Waste Items by Volume

Material Item	Quantity	Unit	Unit Wt	Item Wt(lbs)

Waste Parameters

Waste Parameter	Remaining Weight %	Actual Weight Lbs
Iron-based Metals/Alloys	100.000	108.505
Aluminum-based Metals/Alloys	0.000	0.000
Other metals	0.000	0.000
Other Inorganic Materials	0.000	0.000
Cellulosics	0.000	0.000
Rubber	0.000	0.000
Plastic (Waste Materials)	0.000	0.000
Inorganic matrix	0.000	0.000
Organic matrix	0.000	0.000
Soils/gravel	0.000	0.000
Steel (packaging materials)	0.000	26.000
Plastic (packaging materials)	0.000	0.000
Cellulosics Packaging	0.000	0.000
MLLW Waste	0.000	0.000

Esignature History

Esig Approval Id	User Id	E-signature Date	Comment
2766675	GMATLOCK	31-MAY-14 04:11:24	
2766676	SPEREZ	31-MAY-14 04:11:27	

Batch Id VEB14-00180 **Container Id** 10522178 **Analysis Id** 0000319077

VE Date 31-MAY-14 04:24:18 **Analysis Status** Pass

Gen-IDC Code BN-508 AMWTP Newly Generated Debris **VE Weight** 147.74 **lbs.**

Closure Date 31-MAY-14 04:24:18 **Procedure Id** INST-FOI-17 **Net Weight** 121.74 **lbs.**

Container Type 55 **Revision** 27

Operator 1 GUY MATLOCK **Waste Matrix** S5490 **Summary Category Group** S5000

Operator 2 SHIRLEY PEREZ **Equipment ID** VE BiD RPCK

General

Rigid Liner Present? No **Liner Type** NO LINER **Closure Method** No Bags

Liner Punctured? Yes **Layers Of Confinement** 0 **Fill Factor** 40 % **Liner Lid Present** No

Liquids

Liquids Present? No **Comment**

Liquid Between Liner and Drum 0 pints **Other Liquids** 0 pints

Containerized Liquid pints **Total Liquid Amount** 0 pints

Internal Container with Liquid 0 pints

Internal Container with Liquid No

Prohibited Liquids Present No

Containerized Liquid

Contents

Sharp Objects? Yes **Are Sharp Objects Protected?** No

	Value	*Comment*
Prohibited Compressed Gas Present?	No	
Explosives Present?	No	
Pyrophorics Present?	No	
Mercury Present?	No	
PCBs Present?	No	
PCB Mass (lbs)	0	
Wet Cell Batteries Present?	No	
Corrosives,Ignitables or Reactives Present?	No	
Beryllium Contaminates Present?	No	
Hazardous-Only Waste Present?	No	
Is Waste Incompatible with backfill, packaging materials, or shipping container materials?	No	
Sealed Containers Over 4L?	No	

IDC Verification

Is IDC correct? Yes **Recommended IDC** -

IDC Change Reason

Visual Exam Comment The remaining waste by weight percent is Iron-based Metals/Alloys consisting of misc. scrap metal.

Batch Id VEB14-00180 **Container Id** 10522178 **Analysis Id** 0000319077

Source Container

Is there a source container? Yes

Source Container ID	Location	IDC
10520809	destroyed @ 676- BXI/9	RF-760

IDC CODES

Current Container IDC Code: BN-508 **Recommended IDC Code:** -

Waste Material Items

Packaging Materials

Material Item	Quantity	Unit	Unit Wt	Item Wt(lbs)

Waste Items by Weight

Material Item	Quantity	Unit	Unit Wt	Item Wt(lbs)

Waste Items by Volume

Material Item	Quantity	Unit	Unit Wt	Item Wt(lbs)

Waste Parameters

Waste Parameter	Remaining Weight %	Actual Weight Lbs
Iron-based Metals/Alloys	100.000	121.735
Aluminum-based Metals/Alloys	0.000	0.000
Other metals	0.000	0.000
Other Inorganic Materials	0.000	0.000
Cellulosics	0.000	0.000
Rubber	0.000	0.000
Plastic (Waste Materials)	0.000	0.000
Inorganic matrix	0.000	0.000
Organic matrix	0.000	0.000
Soils/gravel	0.000	0.000
Steel (packaging materials)	0.000	26.000
Plastic (packaging materials)	0.000	0.000
Cellulosics Packaging	0.000	0.000
MLLW Waste	0.000	0.000

Esignature History

Esig Approval Id	User Id	E-signature Date	Comment
2766678	GMATLOCK	31-MAY-14 04:24:18	
2766679	SPEREZ	31-MAY-14 04:24:19	

Batch Id VEB14-00180 **Container Id** 10522083 **Analysis Id** 0000319083

VE Date 31-MAY-14 04:40:11 **Analysis Status** Pass

Gen-IDC Code BN-508 AMWTP Newly Generated Debris **VE Weight** 145.53 lbs.

Closure Date 31-MAY-14 04:40:11 **Procedure Id** INST-FOI-17 **Net Weight** 119.53 lbs.

Container Type 55 **Revision** 27

Operator 1 GUY MATLOCK **Waste Matrix** S5490 **Summary Category Group** S5000

Operator 2 SHIRLEY PEREZ **Equipment ID** VE BiD RPCK

General

Rigid Liner Present? No **Liner Type** NO LINER **Closure Method** No Bags

Liner Punctured? Yes **Layers Of Confinement** 0 **Fill Factor** 40 % **Liner Lid Present** No

Liquids

Liquids Present? No **Comment**

Liquid Between Liner and Drum 0 pints **Other Liquids** 0 pints

Containerized Liquid pints **Total Liquid Amount** 0 pints

Internal Container with Liquid 0 pints

Internal Container with Liquid No

Prohibited Liquids Present No

Containerized Liquid

Contents

Sharp Objects? Yes **Are Sharp Objects Protected?** No

	Value	*Comment*
Prohibited Compressed Gas Present?	No	
Explosives Present?	No	
Pyrophorics Present?	No	
Mercury Present?	No	
PCBs Present?	No	
PCB Mass (lbs)	0	
Wet Cell Batteries Present?	No	
Corrosives,Ignitables or Reactives Present?	No	
Beryllium Contaminates Present?	No	
Hazardous-Only Waste Present?	No	
Is Waste Incompatible with backfill, packaging materials, or shipping container materials?	No	
Sealed Containers Over 4L?	No	

IDC Verification

Is IDC correct? Yes **Recommended IDC** -

IDC Change Reason

Visual Exam Comment The remaining waste by weight percent is Iron-based Metals/Alloys consisting of misc. scrap metal.

Batch Id VEB14-00180 **Container Id** 10522083 **Analysis Id** 0000319083

Source Container

Is there a source container? Yes

Source Container ID	Location	IDC
10520809	destroyed @ 676- BXI/9	RF-760

IDC CODES

Current Container IDC Code: BN-508 **Recommended IDC Code:** -

Waste Material Items

Packaging Materials

Material Item	Quantity	Unit	Unit Wt	Item Wt(lbs)

Waste Items by Weight

Material Item	Quantity	Unit	Unit Wt	Item Wt(lbs)

Waste Items by Volume

Material Item	Quantity	Unit	Unit Wt	Item Wt(lbs)

Waste Parameters

Waste Parameter	Remaining Weight %	Actual Weight Lbs
Iron-based Metals/Alloys	100.000	119.530
Aluminum-based Metals/Alloys	0.000	0.000
Other metals	0.000	0.000
Other Inorganic Materials	0.000	0.000
Cellulosics	0.000	0.000
Rubber	0.000	0.000
Plastic (Waste Materials)	0.000	0.000
Inorganic matrix	0.000	0.000
Organic matrix	0.000	0.000
Soils/gravel	0.000	0.000
Steel (packaging materials)	0.000	26.000
Plastic (packaging materials)	0.000	0.000
Cellulosics Packaging	0.000	0.000
MLLW Waste	0.000	0.000

Esignature History

Esig Approval Id	User Id	E-signature Date	Comment
2766680	GMATLOCK	31-MAY-14 04:40:12	
2766681	SPEREZ	31-MAY-14 04:40:14	

Batch Id VEB14-00180 **Container Id** 10522152 **Analysis Id** 0000319086

VE Date 31-MAY-14 04:57:25 **Analysis Status** Pass

Gen-IDC Code BN-508 AMWTP Newly Generated Debris **VE Weight** 83.79 lbs.

Closure Date 31-MAY-14 04:57:25 **Procedure Id** INST-FOI-17 **Net Weight** 57.79 lbs.

Container Type 55 **Revision** 27

Operator 1 GUY MATLOCK **Waste Matrix** S5490 **Summary Category Group** S5000

Operator 2 SHIRLEY PEREZ **Equipment ID** VE BiD RPCK

General

Rigid Liner Present? No **Liner Type** NO LINER **Closure Method** No Bags

Liner Punctured? Yes **Layers Of Confinement** 0 **Fill Factor** 30 % **Liner Lid Present** No

Liquids

Liquids Present? No **Comment**

Liquid Between Liner and Drum 0 pints **Other Liquids** 0 pints

Containerized Liquid pints **Total Liquid Amount** 0 pints

Internal Container with Liquid 0 pints

Internal Container with Liquid No

Prohibited Liquids Present No

Containerized Liquid

Contents

Sharp Objects? Yes **Are Sharp Objects Protected?** No

	Value	*Comment*
Prohibited Compressed Gas Present?	No	
Explosives Present?	No	
Pyrophorics Present?	No	
Mercury Present?	No	
PCBs Present?	No	
PCB Mass (lbs)	0	
Wet Cell Batteries Present?	No	
Corrosives,Ignitables or Reactives Present?	No	
Beryllium Contaminates Present?	No	
Hazardous-Only Waste Present?	No	
Is Waste Incompatible with backfill, packaging materials, or shipping container materials?	No	
Sealed Containers Over 4L?	No	

IDC Verification

Is IDC correct? Yes **Recommended IDC** -

IDC Change Reason

Visual Exam Comment The remaining waste by weight percent is Iron-based Metals/Alloys consisting of misc. scrap metal.

Batch Id VEB14-00180 **Container Id** 10522152 **Analysis Id** 0000319086

Source Container

Is there a source container? Yes

Source Container ID	Location	IDC
10520809	destroyed @ 676- BXI/9	RF-760

IDC CODES

Current Container IDC Code: BN-508 **Recommended IDC Code:** -

Waste Material Items

Packaging Materials

Material Item	Quantity	Unit	Unit Wt	Item Wt(lbs)

Waste Items by Weight

Material Item	Quantity	Unit	Unit Wt	Item Wt(lbs)

Waste Items by Volume

Material Item	Quantity	Unit	Unit Wt	Item Wt(lbs)

Waste Parameters

Waste Parameter	Remaining Weight %	Actual Weight Lbs
Iron-based Metals/Alloys	100.000	57.790
Aluminum-based Metals/Alloys	0.000	0.000
Other metals	0.000	0.000
Other Inorganic Materials	0.000	0.000
Cellulosics	0.000	0.000
Rubber	0.000	0.000
Plastic (Waste Materials)	0.000	0.000
Inorganic matrix	0.000	0.000
Organic matrix	0.000	0.000
Soils/gravel	0.000	0.000
Steel (packaging materials)	0.000	26.000
Plastic (packaging materials)	0.000	0.000
Cellulosics Packaging	0.000	0.000
MLLW Waste	0.000	0.000

Esignature History

Esig Approval Id	User Id	E-signature Date	Comment
2766715	GMATLOCK	31-MAY-14 04:57:25	
2766716	SPEREZ	31-MAY-14 04:57:26	

Batch Id VEB14-00180 **Container Id** 10522074 **Analysis Id** 0000319088

VE Date 31-MAY-14 10:31:50 **Analysis Status** Pass

Gen-IDC Code BN-508 AMWTP Newly Generated Debris **VE Weight** 55.13 lbs.

Closure Date 31-MAY-14 10:31:50 **Procedure Id** INST-FOI-17 **Net Weight** 29.13 lbs.

Container Type 55 **Revision** 27

Operator 1 JEFFREY K BAILEY **Waste Matrix** S5490 **Summary Category Group** S5000

Operator 2 MIKE REIDER **Equipment ID** VE BiD RPCK

General

Rigid Liner Present? No **Liner Type** NO LINER **Closure Method** No Bags

Liner Punctured? Yes **Layers Of Confinement** 0 **Fill Factor** 75 % **Liner Lid Present** No

Liquids

Liquids Present? No **Comment**

Liquid Between Liner and Drum 0 pints **Other Liquids** 0 pints

Containerized Liquid pints **Total Liquid Amount** 0 pints

Internal Container with Liquid 0 pints

Internal Container with Liquid No

Prohibited Liquids Present No

Containerized Liquid

Contents

Sharp Objects? No **Are Sharp Objects Protected?** Yes

	Value	*Comment*
Prohibited Compressed Gas Present?	No	
Explosives Present?	No	
Pyrophorics Present?	No	
Mercury Present?	No	
PCBs Present?	No	
PCB Mass (lbs)	0	
Wet Cell Batteries Present?	No	
Corrosives,Ignitables or Reactives Present?	No	
Beryllium Contaminates Present?	No	
Hazardous-Only Waste Present?	No	
Is Waste Incompatible with backfill, packaging materials, or shipping container materials?	No	
Sealed Containers Over 4L?	No	

IDC Verification

Is IDC correct? Yes **Recommended IDC** -

IDC Change Reason

Visual Exam Comment The remaining waste by weight percent is plastic consisting of plastic sheeting.

Batch Id VEB14-00180 **Container Id** 10522074 **Analysis Id** 0000319088

Source Container

Is there a source container? Yes

Source Container ID	Location	IDC
10521386	destroyed @ 676- BXI/9	RF-760

IDC CODES

Current Container IDC Code: BN-508 **Recommended IDC Code:** -

Waste Material Items

Packaging Materials

Material Item	Quantity	Unit	Unit Wt	Item Wt(lbs)

Waste Items by Weight

Material Item	Quantity	Unit	Unit Wt	Item Wt(lbs)

Waste Items by Volume

Material Item	Quantity	Unit	Unit Wt	Item Wt(lbs)
Cardboard	1.000	PINTS	0.833	0.830

Waste Parameters

Waste Parameter	Remaining Weight %	Actual Weight Lbs
Iron-based Metals/Alloys	0.000	0.000
Aluminum-based Metals/Alloys	0.000	0.000
Other metals	0.000	0.000
Other Inorganic Materials	0.000	0.000
Cellulosics	0.000	0.830
Rubber	0.000	0.000
Plastic (Waste Materials)	100.000	28.295
Inorganic matrix	0.000	0.000
Organic matrix	0.000	0.000
Soils/gravel	0.000	0.000
Steel (packaging materials)	0.000	26.000
Plastic (packaging materials)	0.000	0.000
Cellulosics Packaging	0.000	0.000
MLLW Waste	0.000	0.000

Esignature History

Esig Approval Id	User Id	E-signature Date	Comment
2766808	JBAILEY	31-MAY-14 10:31:51	
2766809	MREIDER	31-MAY-14 10:31:54	

Batch Id VEB14-00180 **Container Id** 10522150 **Analysis Id** 0000319090

VE Date 31-MAY-14 10:55:08 **Analysis Status** Pass

Gen-IDC Code BN-508 AMWTP Newly Generated Debris **VE Weight** 48.51 lbs.

Closure Date 31-MAY-14 10:55:08 **Procedure Id** INST-FOI-17 **Net Weight** 22.51 lbs.

Container Type 55 **Revision** 27

Operator 1 JEFFREY K BAILEY **Waste Matrix** S5490 **Summary Category Group** S5000

Operator 2 MIKE REIDER **Equipment ID** VE BiD RPCK

General

Rigid Liner Present? No **Liner Type** NO LINER **Closure Method** No Bags

Liner Punctured? Yes **Layers Of Confinement** 0 **Fill Factor** 75 % **Liner Lid Present** No

Liquids

Liquids Present? No **Comment**

Liquid Between Liner and Drum 0 pints **Other Liquids** 0 pints

Containerized Liquid pints **Total Liquid Amount** 0 pints

Internal Container with Liquid 0 pints

Internal Container with Liquid No

Prohibited Liquids Present No

Containerized Liquid

Contents

Sharp Objects? No **Are Sharp Objects Protected?** Yes

	Value	*Comment*
Prohibited Compressed Gas Present?	No	
Explosives Present?	No	
Pyrophorics Present?	No	
Mercury Present?	No	
PCBs Present?	No	
PCB Mass (lbs)	0	
Wet Cell Batteries Present?	No	
Corrosives,Ignitables or Reactives Present?	No	
Beryllium Contaminates Present?	No	
Hazardous-Only Waste Present?	No	
Is Waste Incompatible with backfill, packaging materials, or shipping container materials?	No	
Sealed Containers Over 4L?	No	

IDC Verification

Is IDC correct? Yes **Recommended IDC** -

IDC Change Reason

Visual Exam Comment The remaining waste by weight percent is plastic consisting of plastic sheeting.

VE Boxline and Repackaging Report

Batch Id VEB14-00180 **Container Id** 10522150 **Analysis Id** 0000319090

Source Container

Is there a source container? Yes

Source Container ID	Location	IDC
10521386	destroyed @ 676- BXI/9	RF-760

IDC CODES

Current Container IDC Code: BN-508 **Recommended IDC Code:** -

Waste Material Items

Packaging Materials

Material Item	Quantity	Unit	Unit Wt	Item Wt(lbs)

Waste Items by Weight

Material Item	Quantity	Unit	Unit Wt	Item Wt(lbs)

Waste Items by Volume

Material Item	Quantity	Unit	Unit Wt	Item Wt(lbs)

Waste Parameters

Waste Parameter	Remaining Weight %	Actual Weight Lbs
Iron-based Metals/Alloys	0.000	0.000
Aluminum-based Metals/Alloys	0.000	0.000
Other metals	0.000	0.000
Other Inorganic Materials	0.000	0.000
Cellulosics	0.000	0.000
Rubber	0.000	0.000
Plastic (Waste Materials)	100.000	22.510
Inorganic matrix	0.000	0.000
Organic matrix	0.000	0.000
Soils/gravel	0.000	0.000
Steel (packaging materials)	0.000	26.000
Plastic (packaging materials)	0.000	0.000
Cellulosics Packaging	0.000	0.000
MLLW Waste	0.000	0.000

Esignature History

Esig Approval Id	User Id	E-signature Date	Comment
2766815	JBAILEY	31-MAY-14 10:55:08	
2766816	MREIDER	31-MAY-14 10:55:12	

VE Boxline and Repackaging Report

Batch Id VEB14-00180 **Container Id** 10522168 **Analysis Id** 0000319092

VE Date 31-MAY-14 11:22:24 **Analysis Status** Pass

Gen-IDC Code BN-508 AMWTP Newly Generated Debris **VE Weight** 72.77 lbs.

Closure Date 31-MAY-14 11:22:24 **Procedure Id** INST-FOI-17 **Net Weight** 46.77 lbs.

Container Type 55 **Revision** 27

Operator 1 JEFFREY K BAILEY **Waste Matrix** S5490 **Summary Category Group** S5000

Operator 2 MIKE REIDER **Equipment ID** VE BiD RPCK

General

Rigid Liner Present? No **Liner Type** NO LINER **Closure Method** No Bags

Liner Punctured? Yes **Layers Of Confinement** 0 **Fill Factor** 80 % **Liner Lid Present** No

Liquids

Liquids Present? No **Comment**

Liquid Between Liner and Drum 0 pints **Other Liquids** 0 pints

Containerized Liquid pints **Total Liquid Amount** 0 pints

Internal Container with Liquid 0 pints

Internal Container with Liquid No

Prohibited Liquids Present No

Containerized Liquid

Contents

Sharp Objects? Yes **Are Sharp Objects Protected?** No

	Value	*Comment*
Prohibited Compressed Gas Present?	No	
Explosives Present?	No	
Pyrophorics Present?	No	
Mercury Present?	No	
PCBs Present?	No	
PCB Mass (lbs)	0	
Wet Cell Batteries Present?	No	
Corrosives,Ignitables or Reactives Present?	No	
Beryllium Contaminates Present?	No	
Hazardous-Only Waste Present?	No	
Is Waste Incompatible with backfill, packaging materials, or shipping container materials?	No	
Sealed Containers Over 4L?	No	

IDC Verification

Is IDC correct? Yes **Recommended IDC** -

IDC Change Reason

Visual Exam Comment The remaining waste by weight percent is cellulosics consisting of wood.

VE Boxline and Repackaging Report

Batch Id VEB14-00180 **Container Id** 10522168 **Analysis Id** 0000319092

Source Container

Is there a source container? Yes

Source Container ID	Location	IDC
10521386	destroyed @ 676- BXI/9	RF-760

IDC CODES

Current Container IDC Code: BN-508 **Recommended IDC Code:** -

Waste Material Items

Packaging Materials

Material Item	Quantity	Unit	Unit Wt	Item Wt(lbs)

Waste Items by Weight

Material Item	Quantity	Unit	Unit Wt	Item Wt(lbs)

Waste Items by Volume

Material Item	Quantity	Unit	Unit Wt	Item Wt(lbs)
Iron	0.250	PINTS	7.807	1.950

Waste Parameters

Waste Parameter	Remaining Weight %	Actual Weight Lbs
Iron-based Metals/Alloys	0.000	1.950
Aluminum-based Metals/Alloys	0.000	0.000
Other metals	0.000	0.000
Other Inorganic Materials	0.000	0.000
Cellulosics	100.000	44.815
Rubber	0.000	0.000
Plastic (Waste Materials)	0.000	0.000
Inorganic matrix	0.000	0.000
Organic matrix	0.000	0.000
Soils/gravel	0.000	0.000
Steel (packaging materials)	0.000	26.000
Plastic (packaging materials)	0.000	0.000
Cellulosics Packaging	0.000	0.000
MLLW Waste	0.000	0.000

Esignature History

Esig Approval Id	User Id	E-signature Date	Comment
2766836	JBAILEY	31-MAY-14 11:22:24	
2766837	MREIDER	31-MAY-14 11:22:25	

Batch Id VEB14-00180 **Container Id** 10522171 **Analysis Id** 0000319093

VE Date 31-MAY-14 12:58:27 **Analysis Status** Pass

Gen-IDC Code BN-508 AMWTP Newly Generated Debris **VE Weight** 86.00 lbs.

Closure Date 31-MAY-14 12:58:27 **Procedure Id** INST-FOI-17 **Net Weight** 60.00 lbs.

Container Type 55 **Revision** 27

Operator 1 JEFFREY K BAILEY **Waste Matrix** S5490 **Summary Category Group** S5000

Operator 2 MIKE REIDER **Equipment ID** VE BiD RPCK

General

Rigid Liner Present? No **Liner Type** NO LINER **Closure Method** No Bags

Liner Punctured? Yes **Layers Of Confinement** 0 **Fill Factor** 85 % **Liner Lid Present** No

Liquids

Liquids Present? No **Comment**

Liquid Between Liner and Drum 0 pints **Other Liquids** 0 pints

Containerized Liquid pints **Total Liquid Amount** 0 pints

Internal Container with Liquid 0 pints

Internal Container with Liquid No

Prohibited Liquids Present No

Containerized Liquid

Contents

Sharp Objects? No **Are Sharp Objects Protected?** Yes

	Value	*Comment*
Prohibited Compressed Gas Present?	No	
Explosives Present?	No	
Pyrophorics Present?	No	
Mercury Present?	No	
PCBs Present?	No	
PCB Mass (lbs)	0	
Wet Cell Batteries Present?	No	
Corrosives,Ignitables or Reactives Present?	No	
Beryllium Contaminates Present?	No	
Hazardous-Only Waste Present?	No	
Is Waste Incompatible with backfill, packaging materials, or shipping container materials?	No	
Sealed Containers Over 4L?	No	

IDC Verification

Is IDC correct? Yes **Recommended IDC** -

IDC Change Reason

Visual Exam Comment The remaining waste by weight percent is cellulosics consisting of wood.

Batch Id VEB14-00180 **Container Id** 10522171 **Analysis Id** 0000319093

Source Container

Is there a source container? Yes

Source Container ID	Location	IDC
10521386	destroyed @ 676- BXI/9	RF-760

IDC CODES

Current Container IDC Code: BN-508 **Recommended IDC Code:** -

Waste Material Items

Packaging Materials

Material Item	Quantity	Unit	Unit Wt	Item Wt(lbs)

Waste Items by Weight

Material Item	Quantity	Unit	Unit Wt	Item Wt(lbs)

Waste Items by Volume

Material Item	Quantity	Unit	Unit Wt	Item Wt(lbs)

Waste Parameters

Waste Parameter	Remaining Weight %	Actual Weight Lbs
Iron-based Metals/Alloys	0.000	0.000
Aluminum-based Metals/Alloys	0.000	0.000
Other metals	0.000	0.000
Other Inorganic Materials	0.000	0.000
Cellulosics	100.000	59.995
Rubber	0.000	0.000
Plastic (Waste Materials)	0.000	0.000
Inorganic matrix	0.000	0.000
Organic matrix	0.000	0.000
Soils/gravel	0.000	0.000
Steel (packaging materials)	0.000	26.000
Plastic (packaging materials)	0.000	0.000
Cellulosics Packaging	0.000	0.000
MLLW Waste	0.000	0.000

Esignature History

Esig Approval Id	User Id	E-signature Date	Comment
2766854	JBAILEY	31-MAY-14 12:58:27	
2766855	MREIDER	31-MAY-14 12:58:29	

Batch Id VEB14-00180 **Container Id** 10522086 **Analysis Id** 0000319094

VE Date 31-MAY-14 13:12:39 **Analysis Status** Pass

Gen-IDC Code BN-508 AMWTP Newly Generated Debris **VE Weight** 72.77 lbs.

Closure Date 31-MAY-14 13:12:39 **Procedure Id** INST-FOI-17 **Net Weight** 46.77 lbs.

Container Type 55 **Revision** 27

Operator 1 JEFFREY K BAILEY **Waste Matrix** S5490 **Summary Category Group** S5000

Operator 2 MIKE REIDER **Equipment ID** VE BiD RPCK

General

Rigid Liner Present? No **Liner Type** NO LINER **Closure Method** No Bags

Liner Punctured? Yes **Layers Of Confinement** 0 **Fill Factor** 80 % **Liner Lid Present** No

Liquids

Liquids Present? No **Comment**

Liquid Between Liner and Drum 0 pints **Other Liquids** 0 pints

Containerized Liquid pints **Total Liquid Amount** 0 pints

Internal Container with Liquid 0 pints

Internal Container with Liquid No

Prohibited Liquids Present No

Containerized Liquid

Contents

Sharp Objects? No **Are Sharp Objects Protected?** Yes

	Value	*Comment*
Prohibited Compressed Gas Present?	No	
Explosives Present?	No	
Pyrophorics Present?	No	
Mercury Present?	No	
PCBs Present?	No	
PCB Mass (lbs)	0	
Wet Cell Batteries Present?	No	
Corrosives,Ignitables or Reactives Present?	No	
Beryllium Contaminates Present?	No	
Hazardous-Only Waste Present?	No	
Is Waste Incompatible with backfill, packaging materials, or shipping container materials?	No	
Sealed Containers Over 4L?	No	

IDC Verification

Is IDC correct? Yes **Recommended IDC** -

IDC Change Reason

Visual Exam Comment The remaining waste by weight percent is cellulosics consisting of wood.

VE Boxline and Repackaging Report

Batch Id VEB14-00180 **Container Id** 10522086 **Analysis Id** 0000319094

Source Container

Is there a source container? Yes

Source Container ID	Location	IDC
10521386	destroyed @ 676- BXI/9	RF-760

IDC CODES

Current Container IDC Code: BN-508 **Recommended IDC Code:** -

Waste Material Items

Packaging Materials

Material Item	Quantity	Unit	Unit Wt	Item Wt(lbs)

Waste Items by Weight

Material Item	Quantity	Unit	Unit Wt	Item Wt(lbs)

Waste Items by Volume

Material Item	Quantity	Unit	Unit Wt	Item Wt(lbs)

Waste Parameters

Waste Parameter	Remaining Weight %	Actual Weight Lbs
Iron-based Metals/Alloys	0.000	0.000
Aluminum-based Metals/Alloys	0.000	0.000
Other metals	0.000	0.000
Other Inorganic Materials	0.000	0.000
Cellulosics	100.000	46.765
Rubber	0.000	0.000
Plastic (Waste Materials)	0.000	0.000
Inorganic matrix	0.000	0.000
Organic matrix	0.000	0.000
Soils/gravel	0.000	0.000
Steel (packaging materials)	0.000	26.000
Plastic (packaging materials)	0.000	0.000
Cellulosics Packaging	0.000	0.000
MLLW Waste	0.000	0.000

Esignature History

Esig Approval Id	User Id	E-signature Date	Comment
2766864	JBAILEY	31-MAY-14 13:12:39	
2766865	MREIDER	31-MAY-14 13:12:40	

Batch Id VEB14-00180 **Container Id** 10522163 **Analysis Id** 0000319095

VE Date 31-MAY-14 13:31:04 **Analysis Status** Pass

Gen-IDC Code BN-508 AMWTP Newly Generated Debris **VE Weight** 77.18 lbs.

Closure Date 31-MAY-14 13:31:04 **Procedure Id** INST-FOI-17 **Net Weight** 51.18 lbs.

Container Type 55 **Revision** 27

Operator 1 JEFFREY K BAILEY **Waste Matrix** S5490 **Summary Category Group** S5000

Operator 2 MIKE REIDER **Equipment ID** VE BiD RPCK

General

Rigid Liner Present? No **Liner Type** NO LINER **Closure Method** No Bags

Liner Punctured? Yes **Layers Of Confinement** 0 **Fill Factor** 80 % **Liner Lid Present** No

Liquids

Liquids Present? No **Comment**

Liquid Between Liner and Drum 0 pints **Other Liquids** 0 pints

Containerized Liquid pints **Total Liquid Amount** 0 pints

Internal Container with Liquid 0 pints

Internal Container with Liquid No

Prohibited Liquids Present No

Containerized Liquid

Contents

Sharp Objects? No **Are Sharp Objects Protected?** Yes

	Value	*Comment*
Prohibited Compressed Gas Present?	No	
Explosives Present?	No	
Pyrophorics Present?	No	
Mercury Present?	No	
PCBs Present?	No	
PCB Mass (lbs)	0	
Wet Cell Batteries Present?	No	
Corrosives,Ignitables or Reactives Present?	No	
Beryllium Contaminates Present?	No	
Hazardous-Only Waste Present?	No	
Is Waste Incompatible with backfill, packaging materials, or shipping container materials?	No	
Sealed Containers Over 4L?	No	

IDC Verification

Is IDC correct? Yes **Recommended IDC** -

IDC Change Reason

Visual Exam Comment The remaining waste by weight percent is cellulosics consisting of wood.

Batch Id VEB14-00180 **Container Id** 10522163 **Analysis Id** 0000319095

Source Container

Is there a source container? Yes

Source Container ID	Location	IDC
10521386	destroyed @ 676- BXI/9	RF-760

IDC CODES

Current Container IDC Code: BN-508 **Recommended IDC Code:** -

Waste Material Items

Packaging Materials

Material Item	Quantity	Unit	Unit Wt	Item Wt(lbs)

Waste Items by Weight

Material Item	Quantity	Unit	Unit Wt	Item Wt(lbs)

Waste Items by Volume

Material Item	Quantity	Unit	Unit Wt	Item Wt(lbs)

Waste Parameters

Waste Parameter	Remaining Weight %	Actual Weight Lbs
Iron-based Metals/Alloys	0.000	0.000
Aluminum-based Metals/Alloys	0.000	0.000
Other metals	0.000	0.000
Other Inorganic Materials	0.000	0.000
Cellulosics	100.000	51.175
Rubber	0.000	0.000
Plastic (Waste Materials)	0.000	0.000
Inorganic matrix	0.000	0.000
Organic matrix	0.000	0.000
Soils/gravel	0.000	0.000
Steel (packaging materials)	0.000	26.000
Plastic (packaging materials)	0.000	0.000
Cellulosics Packaging	0.000	0.000
MLLW Waste	0.000	0.000

Esignature History

Esig Approval Id	User Id	E-signature Date	Comment
2766882	JBAILEY	31-MAY-14 13:31:05	
2766883	MREIDER	31-MAY-14 13:31:08	

Batch Id VEB14-00180 **Container Id** 10522080 **Analysis Id** 0000319096

VE Date 31-MAY-14 14:12:32 **Analysis Status** Pass

Gen-IDC Code BN-508 AMWTP Newly Generated Debris **VE Weight** 72.77 lbs.

Closure Date 31-MAY-14 14:12:32 **Procedure Id** INST-FOI-17 **Net Weight** 46.77 lbs.

Container Type 55 **Revision** 27

Operator 1 JEFFREY K BAILEY **Waste Matrix** S5490 **Summary Category Group** S5000

Operator 2 MIKE REIDER **Equipment ID** VE BiD RPCK

General

Rigid Liner Present? No **Liner Type** NO LINER **Closure Method** No Bags

Liner Punctured? Yes **Layers Of Confinement** 0 **Fill Factor** 85 % **Liner Lid Present** No

Liquids

Liquids Present? No **Comment**

Liquid Between Liner and Drum 0 pints **Other Liquids** 0 pints

Containerized Liquid pints **Total Liquid Amount** 0 pints

Internal Container with Liquid 0 pints

Internal Container with Liquid No

Prohibited Liquids Present No

Containerized Liquid

Contents

Sharp Objects? Yes **Are Sharp Objects Protected?** No

	Value	*Comment*
Prohibited Compressed Gas Present?	No	
Explosives Present?	No	
Pyrophorics Present?	No	
Mercury Present?	No	
PCBs Present?	No	
PCB Mass (lbs)	0	
Wet Cell Batteries Present?	No	
Corrosives,Ignitables or Reactives Present?	No	
Beryllium Contaminates Present?	No	
Hazardous-Only Waste Present?	No	
Is Waste Incompatible with backfill, packaging materials, or shipping container materials?	No	
Sealed Containers Over 4L?	No	

IDC Verification

Is IDC correct? Yes **Recommended IDC** -

IDC Change Reason

Visual Exam Comment The remaining waste by weight percent is cellulosics consisting of wood.

Batch Id VEB14-00180 **Container Id** 10522080 **Analysis Id** 0000319096

Source Container

Is there a source container? Yes

Source Container ID	Location	IDC
10521386	destroyed @ 676- BXI/9	RF-760

IDC CODES

Current Container IDC Code: BN-508 **Recommended IDC Code:** -

Waste Material Items

Packaging Materials

Material Item	Quantity	Unit	Unit Wt	Item Wt(lbs)

Waste Items by Weight

Material Item	Quantity	Unit	Unit Wt	Item Wt(lbs)

Waste Items by Volume

Material Item	Quantity	Unit	Unit Wt	Item Wt(lbs)
Iron	0.250	PINTS	7.807	1.950

Waste Parameters

Waste Parameter	Remaining Weight %	Actual Weight Lbs
Iron-based Metals/Alloys	0.000	1.950
Aluminum-based Metals/Alloys	0.000	0.000
Other metals	0.000	0.000
Other Inorganic Materials	0.000	0.000
Cellulosics	100.000	44.815
Rubber	0.000	0.000
Plastic (Waste Materials)	0.000	0.000
Inorganic matrix	0.000	0.000
Organic matrix	0.000	0.000
Soils/gravel	0.000	0.000
Steel (packaging materials)	0.000	26.000
Plastic (packaging materials)	0.000	0.000
Cellulosics Packaging	0.000	0.000
MLLW Waste	0.000	0.000

Esignature History

Esig Approval Id	User Id	E-signature Date	Comment
2766927	JBAILEY	31-MAY-14 14:12:33	
2766928	MREIDER	31-MAY-14 14:12:35	

Batch Id VEB14-00180 **Container Id** 10522161 **Analysis Id** 0000319097

VE Date 31-MAY-14 14:45:24 **Analysis Status** Pass

Gen-IDC Code BN-508 AMWTP Newly Generated Debris **VE Weight** 70.56 lbs.

Closure Date 31-MAY-14 14:45:24 **Procedure Id** INST-FOI-17 **Net Weight** 44.56 lbs.

Container Type 55 **Revision** 27

Operator 1 JEFFREY K BAILEY **Waste Matrix** S5490 **Summary Category Group** S5000

Operator 2 MIKE REIDER **Equipment ID** VE BiD RPCK

General

Rigid Liner Present? No **Liner Type** NO LINER **Closure Method** No Bags

Liner Punctured? Yes **Layers Of Confinement** 0 **Fill Factor** 80 % **Liner Lid Present** No

Liquids

Liquids Present? No **Comment**

Liquid Between Liner and Drum 0 pints **Other Liquids** 0 pints

Containerized Liquid pints **Total Liquid Amount** 0 pints

Internal Container with Liquid 0 pints

Internal Container with Liquid No

Prohibited Liquids Present No

Containerized Liquid

Contents

Sharp Objects? No **Are Sharp Objects Protected?** Yes

	Value	*Comment*
Prohibited Compressed Gas Present?	No	
Explosives Present?	No	
Pyrophorics Present?	No	
Mercury Present?	No	
PCBs Present?	No	
PCB Mass (lbs)	0	
Wet Cell Batteries Present?	No	
Corrosives,Ignitables or Reactives Present?	No	
Beryllium Contaminates Present?	No	
Hazardous-Only Waste Present?	No	
Is Waste Incompatible with backfill, packaging materials, or shipping container materials?	No	
Sealed Containers Over 4L?	No	

IDC Verification

Is IDC correct? Yes **Recommended IDC** -

IDC Change Reason

Visual Exam Comment The remaining waste by weight percent is cellulosics consisting of wood.

AMWTP
Advanced Mixed Waste Treatment Project

AMWTP

VE Boxline and Repackaging Report

Date: 26-Sep-2014

Time: 14:45

Batch Id VEB14-00180 **Container Id** 10522161 **Analysis Id** 0000319097

Source Container

Is there a source container? Yes

Source Container ID	Location	IDC
10521386	destroyed @ 676- BXI/9	RF-760

IDC CODES

Current Container IDC Code: BN-508 **Recommended IDC Code:** -

Waste Material Items

Packaging Materials

Material Item	Quantity	Unit	Unit Wt	Item Wt(lbs)

Waste Items by Weight

Material Item	Quantity	Unit	Unit Wt	Item Wt(lbs)

Waste Items by Volume

Material Item	Quantity	Unit	Unit Wt	Item Wt(lbs)

Waste Parameters

Waste Parameter	Remaining Weight %	Actual Weight Lbs
Iron-based Metals/Alloys	0.000	0.000
Aluminum-based Metals/Alloys	0.000	0.000
Other metals	0.000	0.000
Other Inorganic Materials	0.000	0.000
Cellulosics	100.000	44.560
Rubber	0.000	0.000
Plastic (Waste Materials)	0.000	0.000
Inorganic matrix	0.000	0.000
Organic matrix	0.000	0.000
Soils/gravel	0.000	0.000
Steel (packaging materials)	0.000	26.000
Plastic (packaging materials)	0.000	0.000
Cellulosics Packaging	0.000	0.000
MLLW Waste	0.000	0.000

Esignature History

Esig Approval Id	User Id	E-signature Date	Comment
2766950	JBAILEY	31-MAY-14 14:45:24	
2766951	MREIDER	31-MAY-14 14:45:26	

-----End of VE Boxline Report-----

AMWTP
Advanced Mixed Waste Treatment Project

AMWTP
Checklist Report

Date: 26-Sep-2014
Time: 14:44

Batch Id VEB14-00180 **Open Date** 30-MAY-14 **Close Date** 31-MAY-14

Reviewer RONALD GRISE **Approval Level** Independent Technical Reviewer
Approval Date 01-JUN-14 **Review Iteration** 1

Question Text	Answer	Requirement	Comment
1. Is the QA documentation for the Batch Data Reports complete and includes data reports and QC results? o VE Batch Coversheet o Table of Contents (manual review only) o VE Analysis Reports o Analytical Balance Calibration Check Sheet (Form-1215), if applicable (manual review only) o ITR Checklist (Form-1415, manual review only) o Batch Data Report Supplemental Comment Form (Form-1491, manual review only) o Associated NCRs (referenced in WTS) o Audio/Video Recording References, if applicable	Yes		
2. Are there 20 containers or less in the batch?	Yes		
3. Was each VE Operator qualified at the time of the VE event?	Yes		
4. Was a VE data form completed for each container in the batch?	Yes		
Was the data generated in a technically correct manner using the correct revision of INST-OI-34, Non-facility Visual Examination or INST-FOI-17, Facility Visual Examination Operations, as applicable.	Yes		
6. Was the correct revision of the procedure documented on each analysis report?	Yes		
7. Was the E-signature History review performed?	Yes		
8. Was guidance from VEE documented, as applicable?	N/A		
9. Does every drum reported in the batch have a valid audio/video recording (as applicable)?	N/A		
10. Does the physical form match the waste stream description, waste matrix code and IDC?	Yes		
11. Did the VE event result in an IDC/Waste Matrix Code change? If so, was an NCR initiated?	No		
12. Were the waste material parameters documented correctly?	Yes		
13. Was the presence or absence of prohibited items properly identified? o If prohibited items were identified, were NCRs initiated?	Yes		
14. Has the description of rigid liners and layers of confinement been properly documented?	Yes		
15. Was the drum age criteria (DAC) entered correctly and completely? o Closure Method(s) o Liner Puncture Status o Layers of Confinement o Closure Date o Packaging Configuration o Type and number of filters, as applicable o Liner hole presence and diameter, as applicable	Yes		
16. Have filters been installed or removed from drum as recorded in WTS, as applicable?	N/A		
17. Hand calculations and unit conversions are correct? o Does the packaging weight plus the net weight equal the gross weight of the drum in the estimated waste material parameters, and for the unit conversions that are entered by volume or weight?	Yes		
18. Were all units and significant figures used correct for all reported volumes/weights?	Yes		

Batch Id VEB14-00180 **Open Date** 30-MAY-14 **Close Date** 31-MAY-14

Reviewer RONALD GRISE **Approval Level** Independent Technical Reviewer

Approval Date 01-JUN-14 **Review Iteration** 1

Question Text	Answer	Requirement	Comment
19. Has the data been reviewed for transcription errors as appropriate?	Yes		
20. Were the Visual Examination QAOs met? o Precision o Accuracy o Completeness o Comparability	Yes		
21. Is each data form signed by qualified VE Operators, as applicable per the appropriate procedure being used?	Yes		
22. Was the audio/video check satisfactory, as applicable?	N/A		
23. Was the scale or balance check weight event satisfactory, as applicable?	N/A		
24. Are the QC weight checks within the tolerance of the scale or balance, as applicable?	N/A		
25. Were any NCRs generated for drums containing prohibited items or any nonconforming conditions that failed to meet DQOs or QAOs? o Include the NCRs as appropriate, in the Batch Data Report.	No		
26. Were the rework requirements clearly identified in WTS or on the BDR?	N/A		

Batch Id VEB14-00180 **Open Date** 30-MAY-14 **Close Date** 31-MAY-14

Reviewer SEAN CANIFF **Approval Level** SPM Data Validation

Approval Date 05-JUN-14 **Review Iteration** 1

Question Text	Answer	Requirement	Comment
(1) Has the batch received a Data Generation Level Independent Technical Review?	Yes	MP-TRUW-8.2, C3-10b(1)	
(2) Are the batch data review checklists complete?	Yes	MP-TRUW-8.2, C3-10b(1)	
(3) When identified, were PCBs, mercury, lead, or other hazardous contaminants consistent with the waste stream AK Summary Report(s) and/or AK documentation?	N/A	MP-TRUW-8.2, C4-3	None identified.
(4) Are any ignitable, corrosive, or reactive wastes identified?	No	MP-TRUW-8.2, C4-3	
(5) Are the packaging configurations identified on the VE consistent with the waste stream AK Summary Report(s) and/or AK documentation?	Yes	MP-TRUW-8.2, C4-3	
(6) Do the drums in this batch contain typical waste items consistent with waste stream AK Summary Report(s) and/or AK documentation?	Yes	MP-TRUW-8.2, C4-3	
(7) Are the Waste Matrix Codes and physical form descriptions consistent with AK?	Yes	MP-TRUW-8.2, C4-3	
(8) Have all AK discrepancies been resolved and have all AK Resolution checklists been approved? Reference all waste stream AK documentation used in review of this data package.	N/A	MP-TRUW-8.2, C4-3	No discrepancies. Referenced Truw-05 and TRUW -83.
(9) Does the batch report identify the correct implementing procedure number and revision number used for this testing method?	Yes	MP-TRUW-8.2, C3-4 and Table C3-11	
(10) Have the Waste Matrix Code (WMC) and IDC for all drums in the batch remained the same as originally assigned by the historical designation? NOTE: If not, note the drum number in the comment field and notify the Acceptable Knowledge Expert (AKE) if an NCR does not exist for the WMC and IDC change.	N/A	MP-TRUW-8.2, C-3c and C1-4	The IDC, WMC and summary category for newly generated waste are assigned by the operators during the VE technique event.
(11) Does the physical form of the waste match the WMC, waste stream description, and identify the absence of prohibited items?	Yes	MP-TRUW-8.2, C-3c and C1-4	
(12) If observable liquids exist in the drum, is an estimate of quantity given?	N/A	MP-TRUW-8.2, C-3c and C1-4	No observable liquids exist.
(13) Precision: Have all discrepancies been reconciled between the operator and the ITR with regard to identification of WMC, liquids in excess of TSDF-WAC limits, and compressed gases?	N/A	MP-TRUW-8.2 C3-4b	
(14) Accuracy: Have all operators passed a comprehensive examination and demonstrated satisfactory performance in the presence of the VE expert during initial and subsequent qualifications?	Yes	MP-TRUW-8.2 C3-4b	
(15) Completeness: Has a validated VE data form been obtained for 100% of the waste containers subject to VE?	Yes	MP-TRUW-8.2 C3-4b	
(16) Comparability: Has the comparability of VE data from different operators been enhanced by use of standardized VE procedures and operator qualifications?	Yes	MP-TRUW-8.2 C3-4b	
(17) Does the data for all containers within this batch meet the review, validation, and verification requirements? · Are proper units (e.g. Liters or pounds) and significant figure used? · Is the BDR complete (all pages identified in the BDR and numbered according)? - VE Batch Coversheet - Table of Contents (manual review only) - VE Analysis Reports - Analytical Balance Calibration Checklist (if applicable) - ITR Checklist (Form-1415)	Yes	MP-TRUW-8.2, C3-10b and Table C3-11	

Batch Id VEB14-00180 **Open Date** 30-MAY-14 **Close Date** 31-MAY-14

Reviewer SEAN CANIFF **Approval Level** SPM Data Validation

Approval Date 05-JUN-14 **Review Iteration** 1

Question Text	Answer	Requirement	Comment
- Associated NCRs - Audio/Video Recordings (if applicable)			
(18) Do the drum reports contain the (a) Batch Data Report number and date, (b) waste container number (c)WMC, (d) implementing procedure and revision, (e) audio/video recording reference, (f) audio and video QC checks were performed and satisfactory, (g) verification that the physical form matches the waste stream description and WMC, (h) absence of prohibited items, (i) gross container weight, (j) waste material parameter weights, and (k) signature and date of examination (signatures of both operators when applicable)?	Yes	MP-TRUW-8.2, C1-4 and Table C3-11	VE technique for newly generated waste does not require an audio/video record.
(19) Is the description of container contents detailed enough to provide verification of estimated weights for the waste matrix parameters identified?	Yes	MP-TRUW-8.2, C1-4 and Table C3-11	
(20) Is there a valid second weight check for every 10 items?	N/A	MP-TRUW-8.2, C1-4	Not required for VE.
(21) Verification of two operator signatures when doing VE?	Yes	MP-TRUW-8.2, C-3d(1) and Table C3-11	
(22) Are there 20 or fewer containers in the batch?	Yes	MP-TRUW-8.2, C1-3 and C3-10	
(23) Review all NCRs (open and closed). Can the batch be approved?	Yes	MP-TRUW-8.2, C3-13	No NCRs are associated with this batch data.
(24) All data associated with this BDR is acceptable for signature release?	Yes	MP-TRUW-8.2, C3-10b and C3-10b(1)	

Batch Id VEB14-00180 **Open Date** 30-MAY-14 **Close Date** 31-MAY-14

Esignature History

Esig Approval ID	User ID	Esig Date	Approval Level	Comments
2770267	SCANIFF	05-JUN-14	SPM	Promote.
2767386	RGRISE	01-JUN-14	ITR	Promote batch to SPM level.

AMWTP
Advanced Mixed Waste Treatment Project

AMWTP

Non-Conformance Report

Date: 26-Sep-2014

Time: 14:49

*****Batch NCR(s)*****

Batch Type VEB	**Batch ID** VEB14-00180		
Trackwise Number	**Status**	**Opened Date**	**Closed Date**

*****Container NCR(s)*****

Container ID *or related Batch ID*	**Trackwise Number**	**Status**	**Opened Date**	**Closed Date**

*****End of Non-Conformance Report*****

AMWTP
Advanced Mixed Waste Treatment Project

AMWTP

Scale Check Event Report

Date: 26-Sep-2014

Time: 14:49

Batch Id	VEB14-00180	**Container Id**	10522168
Batch Id	VEB14-00180	**Container Id**	10522071
Batch Id	VEB14-00180	**Container Id**	10522152
Batch Id	VEB14-00180	**Container Id**	10522095
Batch Id	VEB14-00180	**Container Id**	10522150
Batch Id	VEB14-00180	**Container Id**	10522156
Batch Id	VEB14-00180	**Container Id**	10522083
Batch Id	VEB14-00180	**Container Id**	10522086
Batch Id	VEB14-00180	**Container Id**	10522163
Batch Id	VEB14-00180	**Container Id**	10522075
Batch Id	VEB14-00180	**Container Id**	10522074
Batch Id	VEB14-00180	**Container Id**	10522171
Batch Id	VEB14-00180	**Container Id**	10522157
Batch Id	VEB14-00180	**Container Id**	10522159
Batch Id	VEB14-00180	**Container Id**	10522149
Batch Id	VEB14-00180	**Container Id**	10522169
Batch Id	VEB14-00180	**Container Id**	10522147
Batch Id	VEB14-00180	**Container Id**	10522178
Batch Id	VEB14-00180	**Container Id**	10522080
Batch Id	VEB14-00180	**Container Id**	10522161

DIVIDER

PAGE

AMWTP
Advanced Mixed Waste Treatment Project

AMWTP

Batch Report Coversheet

Date: 26-Sep-2014

Time: 15:07

Batch Type VE Boxline
Batch Report No. VEB14-00212
Batch Id VEB14-00212
Open Date 03-AUG-14 04:37:07
Close Date 03-AUG-14 21:58:41
Batch Status AP
Test Facility Idaho AMWTP

INFORMATION ONLY

Equipment Id VE BiD RPCK VE Box Repackaging Into Drums

Container Id	IDC	Analysis Id	Date Examined	QC Type	Analysis Status	Operator
10523855	BN-508	0000320188	03-AUG-14 04:37:08	Original	P	ANTHONY CAIN
10523851	BN-508	0000320189	03-AUG-14 05:53:56	Original	P	ANTHONY CAIN
10523885	BN-508	0000320190	03-AUG-14 11:47:35	Original	P	HOWARD SHELL
10523846	BN-508	0000320192	03-AUG-14 12:04:05	Original	P	HOWARD SHELL
10523887	BN-508	0000320193	03-AUG-14 12:28:00	Original	P	HOWARD SHELL
10523849	BN-508	0000320194	03-AUG-14 12:41:54	Original	P	HOWARD SHELL
10523865	BN-508	0000320195	03-AUG-14 12:59:41	Original	P	HOWARD SHELL
10524362	BN-508	0000320197	03-AUG-14 16:41:44	Original	P	HOWARD SHELL
10523815	BN-508	0000320198	03-AUG-14 16:51:55	Original	P	HOWARD SHELL
10524339	BN-508	0000320199	03-AUG-14 17:01:17	Original	P	HOWARD SHELL
10523883	BN-508	0000320200	03-AUG-14 17:12:58	Original	P	HOWARD SHELL
10523711	BN-508	0000320203	03-AUG-14 20:07:37	Original	P	REX BUSH
10524335	BN-508	0000320204	03-AUG-14 20:12:10	Original	NR	GUY MATLOCK
10523041	BN-508	0000320205	03-AUG-14 20:20:35	Original	P	REX BUSH
10523681	BN-508	0000320206	03-AUG-14 20:31:03	Original	P	REX BUSH
10523820	BN-508	0000320207	03-AUG-14 20:58:03	Original	P	GUY MATLOCK
10523839	BN-508	0000320208	03-AUG-14 21:11:11	Original	P	REX BUSH
10523840	BN-508	0000320209	03-AUG-14 21:42:28	Original	P	REX BUSH
10523889	BN-508	0000320210	03-AUG-14 21:47:02	Original	P	REX BUSH
10523827	BN-508	0000320212	03-AUG-14 21:57:41	Original	P	GUY MATLOCK

**********Batch Comments**********

Written By	Date	Comment
KHUGHES	15-AUG-14 13:41:39	Accepted for ITR validation
KHUGHES	15-AUG-14 13:59:20	promote to SPM
NSTYHL	18-AUG-14 14:44:43	SPM review complete.
NSTYHL	18-AUG-14 14:44:43	Approve batch.

AMWTP

Batch Report Coversheet

Date: 26-Sep-2014

Time: 15:07

**********Batch E-Signature History**********

Approval ID	User ID	Signature Date	Comment
2812137	KHUGHES	15-AUG-2014 13:59:20	promote to SPM
2815322	NSTYHL	18-AUG-2014 14:44:43	Approve batch.

***** End of Batch Report Coversheet Report *****

AMWTP
Advanced Mixed Waste Treatment Project

AMWTP

VE Boxline and Repackaging Report

Date: 26-Sep-2014

Time: 15:08

Batch Id VEB14-00212 **Container Id** 10523855 **Analysis Id** 0000320188

VE Date 03-AUG-14 04:37:08 **Analysis Status** Pass

Gen-IDC Code BN-508 AMWTP Newly Generated Debris **VE Weight** 242.55 lbs.

Closure Date 03-AUG-14 04:37:08 **Procedure Id** INST-FOI-17 **Net Weight** 216.55 lbs.

Container Type 55 **Revision** 27

Operator 1 ANTHONY CAIN **Waste Matrix** S5490 **Summary Category Group** S5000

Operator 2 GUY MATLOCK **Equipment ID** VE BiD RPCK

General

Rigid Liner Present? No **Liner Type** NO LINER **Closure Method** No Bags

Liner Punctured? Yes **Layers Of Confinement** 0 **Fill Factor** 80 % **Liner Lid Present** No

Liquids

Liquids Present? No **Comment**

Liquid Between Liner and Drum 0 pints **Other Liquids** 0 pints

Containerized Liquid pints **Total Liquid Amount** 0 pints

Internal Container with Liquid 0 pints

Internal Container with Liquid No

Prohibited Liquids Present No

Containerized Liquid

Contents

Sharp Objects? Yes **Are Sharp Objects Protected?** No

	Value	*Comment*
Prohibited Compressed Gas Present?	No	
Explosives Present?	No	
Pyrophorics Present?	No	
Mercury Present?	No	
PCBs Present?	No	
PCB Mass (lbs)	0	
Wet Cell Batteries Present?	No	
Corrosives,Ignitables or Reactives Present?	No	
Beryllium Contaminates Present?	No	
Hazardous-Only Waste Present?	No	
Is Waste Incompatible with backfill, packaging materials, or shipping container materials?	No	
Sealed Containers Over 4L?	No	

IDC Verification

Is IDC correct? Yes **Recommended IDC** -

IDC Change Reason

Visual Exam Comment The remaining waste by weight percent is Iron Based Metal Alloys consisting of scrap metal.

VE Boxline and Repackaging Report

Batch Id VEB14-00212 **Container Id** 10523855 **Analysis Id** 0000320188

Source Container

Is there a source container? Yes

Source Container ID	Location	IDC
10035135	destroyed @ 676- BXI/9	AE-100

IDC CODES

Current Container IDC Code: BN-508 **Recommended IDC Code:** -

Waste Material Items

Packaging Materials

Material Item	Quantity	Unit	Unit Wt	Item Wt(lbs)

Waste Items by Weight

Material Item	Quantity	Unit	Unit Wt	Item Wt(lbs)

Waste Items by Volume

Material Item	Quantity	Unit	Unit Wt	Item Wt(lbs)
Plastic	6.000	PINTS	0.937	5.620
Debris Sweepings	7.000	PINTS	1.000	7.000

Waste Parameters

Waste Parameter	Remaining Weight %	Actual Weight Lbs
Iron-based Metals/Alloys	100.000	203.930
Aluminum-based Metals/Alloys	0.000	0.000
Other metals	0.000	0.000
Other Inorganic Materials	0.000	7.000
Cellulosics	0.000	0.000
Rubber	0.000	0.000
Plastic (Waste Materials)	0.000	5.620
Inorganic matrix	0.000	0.000
Organic matrix	0.000	0.000
Soils/gravel	0.000	0.000
Steel (packaging materials)	0.000	26.000
Plastic (packaging materials)	0.000	0.000
Cellulosics Packaging	0.000	0.000
MLLW Waste	0.000	0.000

Esignature History

Esig Approval Id	User Id	E-signature Date	Comment
2801269	TCAIN	03-AUG-14 04:37:09	
2801270	GMATLOCK	03-AUG-14 04:37:13	

VE Boxline and Repackaging Report

Batch Id VEB14-00212 **Container Id** 10523851 **Analysis Id** 0000320189

VE Date 03-AUG-14 05:53:56 **Analysis Status** Pass

Gen-IDC Code BN-508 AMWTP Newly Generated Debris **VE Weight** 152.15 lbs.

Closure Date 03-AUG-14 05:53:56 **Procedure Id** INST-FOI-17 **Net Weight** 126.15 lbs.

Container Type 55 **Revision** 27

Operator 1 ANTHONY CAIN **Waste Matrix** S5490 **Summary Category Group** S5000

Operator 2 GUY MATLOCK **Equipment ID** VE BiD RPCK

General

Rigid Liner Present? No **Liner Type** NO LINER **Closure Method** No Bags

Liner Punctured? Yes **Layers Of Confinement** 0 **Fill Factor** 65 % **Liner Lid Present** No

Liquids

Liquids Present? No **Comment**

Liquid Between Liner and Drum 0 pints **Other Liquids** 0 pints

Containerized Liquid pints **Total Liquid Amount** 0 pints

Internal Container with Liquid 0 pints

Internal Container with Liquid No

Prohibited Liquids Present No

Containerized Liquid

Contents

Sharp Objects? Yes **Are Sharp Objects Protected?** No

	Value	*Comment*
Prohibited Compressed Gas Present?	No	
Explosives Present?	No	
Pyrophorics Present?	No	
Mercury Present?	No	
PCBs Present?	No	
PCB Mass (lbs)	0	
Wet Cell Batteries Present?	No	
Corrosives,Ignitables or Reactives Present?	No	
Beryllium Contaminates Present?	No	
Hazardous-Only Waste Present?	No	
Is Waste Incompatible with backfill, packaging materials, or shipping container materials?	No	
Sealed Containers Over 4L?	No	

IDC Verification

Is IDC correct? Yes **Recommended IDC** -

IDC Change Reason

Visual Exam Comment The remaining waste by weight percent is Iron Based Metal Alloys consisting of scrap metal.

Batch Id VEB14-00212 **Container Id** 10523851 **Analysis Id** 0000320189

Source Container

Is there a source container? Yes

Source Container ID	Location	IDC
10035135	destroyed @ 676- BXI/9	AE-100

IDC CODES

Current Container IDC Code: BN-508 **Recommended IDC Code:** -

Waste Material Items

Packaging Materials

Material Item	Quantity	Unit	Unit Wt	Item Wt(lbs)

Waste Items by Weight

Material Item	Quantity	Unit	Unit Wt	Item Wt(lbs)

Waste Items by Volume

Material Item	Quantity	Unit	Unit Wt	Item Wt(lbs)
Glass	1.000	PINTS	2.082	2.080
Plastic	6.000	PINTS	0.937	5.620
Debris Sweepings	4.000	PINTS	1.000	4.000

Waste Parameters

Waste Parameter	Remaining Weight %	Actual Weight Lbs
Iron-based Metals/Alloys	100.000	114.445
Aluminum-based Metals/Alloys	0.000	0.000
Other metals	0.000	0.000
Other Inorganic Materials	0.000	6.080
Cellulosics	0.000	0.000
Rubber	0.000	0.000
Plastic (Waste Materials)	0.000	5.620
Inorganic matrix	0.000	0.000
Organic matrix	0.000	0.000
Soils/gravel	0.000	0.000
Steel (packaging materials)	0.000	26.000
Plastic (packaging materials)	0.000	0.000
Cellulosics Packaging	0.000	0.000
MLLW Waste	0.000	0.000

Esignature History

Esig Approval Id	User Id	E-signature Date	Comment
2801276	TCAIN	03-AUG-14 05:53:56	
2801277	GMATLOCK	03-AUG-14 05:53:58	

VE Boxline and Repackaging Report

Batch Id VEB14-00212 **Container Id** 10523885 **Analysis Id** 0000320190

VE Date 03-AUG-14 11:47:35 **Analysis Status** Pass

Gen-IDC Code BN-508 AMWTP Newly Generated Debris **VE Weight** 132.30 lbs.

Closure Date 03-AUG-14 11:47:35 **Procedure Id** INST-FOI-17 **Net Weight** 106.30 lbs.

Container Type 55 **Revision** 27

Operator 1 HOWARD SHELL **Waste Matrix** S5490 **Summary Category Group** S5000

Operator 2 JEFFREY K BAILEY **Equipment ID** VE BiD RPCK

General

Rigid Liner Present? No **Liner Type** NO LINER **Closure Method** No Bags

Liner Punctured? Yes **Layers Of Confinement** 0 **Fill Factor** 76 % **Liner Lid Present** No

Liquids

Liquids Present? No **Comment**

Liquid Between Liner and Drum 0 pints **Other Liquids** 0 pints

Containerized Liquid pints **Total Liquid Amount** 0 pints

Internal Container with Liquid 0 pints

Internal Container with Liquid No

Prohibited Liquids Present No

Containerized Liquid

Contents

Sharp Objects? No **Are Sharp Objects Protected?** Yes

	Value	*Comment*
Prohibited Compressed Gas Present?	No	
Explosives Present?	No	
Pyrophorics Present?	No	
Mercury Present?	No	
PCBs Present?	No	
PCB Mass (lbs)	0	
Wet Cell Batteries Present?	No	
Corrosives,Ignitables or Reactives Present?	No	
Beryllium Contaminates Present?	No	
Hazardous-Only Waste Present?	No	
Is Waste Incompatible with backfill, packaging materials, or shipping container materials?	No	
Sealed Containers Over 4L?	No	

IDC Verification

Is IDC correct? Yes **Recommended IDC** -

IDC Change Reason

Visual Exam Comment The remaining waste by weight percent is Plastic consisting of sheeting, bags and misc. plastic.

Batch Id VEB14-00212 **Container Id** 10523885 **Analysis Id** 0000320190

Source Container

Is there a source container? Yes

Source Container ID	Location	IDC
10035135	destroyed @ 676- BXI/9	AE-100

IDC CODES

Current Container IDC Code: BN-508 **Recommended IDC Code:** -

Waste Material Items

Packaging Materials

Material Item	Quantity	Unit	Unit Wt	Item Wt(lbs)

Waste Items by Weight

Material Item	Quantity	Unit	Unit Wt	Item Wt(lbs)

Waste Items by Volume

Material Item	Quantity	Unit	Unit Wt	Item Wt(lbs)
Paper	2.000	PINTS	0.969	1.940
Cloth Material	4.000	PINTS	2.000	8.000

Waste Parameters

Waste Parameter	Remaining Weight %	Actual Weight Lbs
Iron-based Metals/Alloys	0.000	0.000
Aluminum-based Metals/Alloys	0.000	0.000
Other metals	0.000	0.000
Other Inorganic Materials	0.000	0.000
Cellulosics	0.000	9.940
Rubber	0.000	0.000
Plastic (Waste Materials)	100.000	96.360
Inorganic matrix	0.000	0.000
Organic matrix	0.000	0.000
Soils/gravel	0.000	0.000
Steel (packaging materials)	0.000	26.000
Plastic (packaging materials)	0.000	0.000
Cellulosics Packaging	0.000	0.000
MLLW Waste	0.000	0.000

Esignature History

Esig Approval Id	User Id	E-signature Date	Comment
2801380	HSHELL	03-AUG-14 11:47:35	
2801381	JBAILEY	03-AUG-14 11:47:37	

VE Boxline and Repackaging Report

Batch Id VEB14-00212 **Container Id** 10523846 **Analysis Id** 0000320192

VE Date 03-AUG-14 12:04:05 **Analysis Status** Pass

Gen-IDC Code BN-508 AMWTP Newly Generated Debris **VE Weight** 154.35 lbs.

Closure Date 03-AUG-14 12:04:05 **Procedure Id** INST-FOI-17 **Net Weight** 128.35 lbs.

Container Type 55 **Revision** 27

Operator 1 HOWARD SHELL **Waste Matrix** S5490 **Summary Category Group** S5000

Operator 2 JEFFREY K BAILEY **Equipment ID** VE BiD RPCK

General

Rigid Liner Present? No **Liner Type** NO LINER **Closure Method** No Bags

Liner Punctured? Yes **Layers Of Confinement** 0 **Fill Factor** 72 % **Liner Lid Present** No

Liquids

Liquids Present? No **Comment**

Liquid Between Liner and Drum 0 pints **Other Liquids** 0 pints

Containerized Liquid pints **Total Liquid Amount** 0 pints

Internal Container with Liquid 0 pints

Internal Container with Liquid No

Prohibited Liquids Present No

Containerized Liquid

Contents

Sharp Objects? Yes **Are Sharp Objects Protected?** No

	Value	*Comment*
Prohibited Compressed Gas Present?	No	
Explosives Present?	No	
Pyrophorics Present?	No	
Mercury Present?	No	
PCBs Present?	No	
PCB Mass (lbs)	0	
Wet Cell Batteries Present?	No	
Corrosives,Ignitables or Reactives Present?	No	
Beryllium Contaminates Present?	No	
Hazardous-Only Waste Present?	No	
Is Waste Incompatible with backfill, packaging materials, or shipping container materials?	No	
Sealed Containers Over 4L?	No	

IDC Verification

Is IDC correct? Yes **Recommended IDC** -

IDC Change Reason

Visual Exam Comment The remaining waste by weight percent is Iron Based Metal Alloy consisting of scrap metal.

VE Boxline and Repackaging Report

Batch Id VEB14-00212 **Container Id** 10523846 **Analysis Id** 0000320192

Source Container

Is there a source container? Yes

Source Container ID	Location	IDC
10035135	destroyed @ 676- BXI/9	AE-100

IDC CODES

Current Container IDC Code: BN-508 **Recommended IDC Code:** -

Waste Material Items

Packaging Materials

Material Item	Quantity	Unit	Unit Wt	Item Wt(lbs)

Waste Items by Weight

Material Item	Quantity	Unit	Unit Wt	Item Wt(lbs)

Waste Items by Volume

Material Item	Quantity	Unit	Unit Wt	Item Wt(lbs)
Rubber	2.000	PINTS	1.554	3.110
Plastic	6.000	PINTS	0.937	5.620
Cloth Material	2.000	PINTS	2.000	4.000

Waste Parameters

Waste Parameter	Remaining Weight %	Actual Weight Lbs
Iron-based Metals/Alloys	100.000	115.620
Aluminum-based Metals/Alloys	0.000	0.000
Other metals	0.000	0.000
Other Inorganic Materials	0.000	0.000
Cellulosics	0.000	4.000
Rubber	0.000	3.110
Plastic (Waste Materials)	0.000	5.620
Inorganic matrix	0.000	0.000
Organic matrix	0.000	0.000
Soils/gravel	0.000	0.000
Steel (packaging materials)	0.000	26.000
Plastic (packaging materials)	0.000	0.000
Cellulosics Packaging	0.000	0.000
MLLW Waste	0.000	0.000

Esignature History

Esig Approval Id	User Id	E-signature Date	Comment
2801385	HSHELL	03-AUG-14 12:04:05	
2801386	JBAILEY	03-AUG-14 12:04:06	

Batch Id VEB14-00212 **Container Id** 10523887 **Analysis Id** 0000320193

VE Date 03-AUG-14 12:28:00 **Analysis Status** Pass

Gen-IDC Code BN-508 AMWTP Newly Generated Debris **VE Weight** 136.71 lbs.

Closure Date 03-AUG-14 12:28:00 **Procedure Id** INST-FOI-17 **Net Weight** 110.71 lbs.

Container Type 55 **Revision** 27

Operator 1 HOWARD SHELL **Waste Matrix** S5490 **Summary Category Group** S5000

Operator 2 JEFFREY K BAILEY **Equipment ID** VE BiD RPCK

General

Rigid Liner Present? No **Liner Type** NO LINER **Closure Method** No Bags

Liner Punctured? Yes **Layers Of Confinement** 0 **Fill Factor** 70 % **Liner Lid Present** No

Liquids

Liquids Present? No **Comment**

Liquid Between Liner and Drum 0 pints **Other Liquids** 0 pints

Containerized Liquid pints **Total Liquid Amount** 0 pints

Internal Container with Liquid 0 pints

Internal Container with Liquid No

Prohibited Liquids Present No

Containerized Liquid

Contents

Sharp Objects? Yes **Are Sharp Objects Protected?** No

	Value	*Comment*
Prohibited Compressed Gas Present?	No	
Explosives Present?	No	
Pyrophorics Present?	No	
Mercury Present?	No	
PCBs Present?	No	
PCB Mass (lbs)	0	
Wet Cell Batteries Present?	No	
Corrosives,Ignitables or Reactives Present?	No	
Beryllium Contaminates Present?	No	
Hazardous-Only Waste Present?	No	
Is Waste Incompatible with backfill, packaging materials, or shipping container materials?	No	
Sealed Containers Over 4L?	No	

IDC Verification

Is IDC correct? Yes **Recommended IDC** -

IDC Change Reason

Visual Exam Comment The remaining waste by weight percent is Iron Based Metal Alloy consisting of scrap metal.

Batch Id VEB14-00212 **Container Id** 10523887 **Analysis Id** 0000320193

Source Container

Is there a source container? Yes

Source Container ID	Location	IDC
10035135	destroyed @ 676- BXI/9	AE-100

IDC CODES

Current Container IDC Code: BN-508 **Recommended IDC Code:** -

Waste Material Items

Packaging Materials

Material Item	Quantity	Unit	Unit Wt	Item Wt(lbs)

Waste Items by Weight

Material Item	Quantity	Unit	Unit Wt	Item Wt(lbs)

Waste Items by Volume

Material Item	Quantity	Unit	Unit Wt	Item Wt(lbs)
Plastic	6.000	PINTS	0.937	5.620
Fiberglass	1.000	PINTS	0.500	0.500
Cloth Material	2.000	PINTS	2.000	4.000

Waste Parameters

Waste Parameter	Remaining Weight %	Actual Weight Lbs
Iron-based Metals/Alloys	100.000	100.590
Aluminum-based Metals/Alloys	0.000	0.000
Other metals	0.000	0.000
Other Inorganic Materials	0.000	0.500
Cellulosics	0.000	4.000
Rubber	0.000	0.000
Plastic (Waste Materials)	0.000	5.620
Inorganic matrix	0.000	0.000
Organic matrix	0.000	0.000
Soils/gravel	0.000	0.000
Steel (packaging materials)	0.000	26.000
Plastic (packaging materials)	0.000	0.000
Cellulosics Packaging	0.000	0.000
MLLW Waste	0.000	0.000

Esignature History

Esig Approval Id	User Id	E-signature Date	Comment
2801392	HSHELL	03-AUG-14 12:28:00	
2801393	JBAILEY	03-AUG-14 12:28:02	

VE Boxline and Repackaging Report

Batch Id VEB14-00212 **Container Id** 10523849 **Analysis Id** 0000320194

VE Date 03-AUG-14 12:41:54 **Analysis Status** Pass

Gen-IDC Code BN-508 AMWTP Newly Generated Debris **VE Weight** 149.94 lbs.

Closure Date 03-AUG-14 12:41:54 **Procedure Id** INST-FOI-17 **Net Weight** 123.94 lbs.

Container Type 55 **Revision** 27

Operator 1 HOWARD SHELL **Waste Matrix** S5490 **Summary Category Group** S5000

Operator 2 JEFFREY K BAILEY **Equipment ID** VE BiD RPCK

General

Rigid Liner Present? No **Liner Type** NO LINER **Closure Method** No Bags

Liner Punctured? Yes **Layers Of Confinement** 0 **Fill Factor** 70 % **Liner Lid Present** No

Liquids

Liquids Present? No **Comment**

Liquid Between Liner and Drum 0 pints **Other Liquids** 0 pints

Containerized Liquid pints **Total Liquid Amount** 0 pints

Internal Container with Liquid 0 pints

Internal Container with Liquid No

Prohibited Liquids Present No

Containerized Liquid

Contents

Sharp Objects? Yes **Are Sharp Objects Protected?** No

	Value	*Comment*
Prohibited Compressed Gas Present?	No	
Explosives Present?	No	
Pyrophorics Present?	No	
Mercury Present?	No	
PCBs Present?	No	
PCB Mass (lbs)	0	
Wet Cell Batteries Present?	No	
Corrosives,Ignitables or Reactives Present?	No	
Beryllium Contaminates Present?	No	
Hazardous-Only Waste Present?	No	
Is Waste Incompatible with backfill, packaging materials, or shipping container materials?	No	
Sealed Containers Over 4L?	No	

IDC Verification

Is IDC correct? Yes **Recommended IDC** -

IDC Change Reason

Visual Exam Comment The remaining waste by weight percent is Iron Based Metal Alloy consisting of scrap metal.

VE Boxline and Repackaging Report

Batch Id VEB14-00212 **Container Id** 10523849 **Analysis Id** 0000320194

Source Container

Is there a source container? Yes

Source Container ID	Location	IDC
10035135	destroyed @ 676- BXI/9	AE-100

IDC CODES

Current Container IDC Code: BN-508 **Recommended IDC Code:** -

Waste Material Items

Packaging Materials

Material Item	Quantity	Unit	Unit Wt	Item Wt(lbs)

Waste Items by Weight

Material Item	Quantity	Unit	Unit Wt	Item Wt(lbs)

Waste Items by Volume

Material Item	Quantity	Unit	Unit Wt	Item Wt(lbs)
Paper	2.000	PINTS	0.969	1.940
Plastic	5.000	PINTS	0.937	4.690
Cloth Material	2.000	PINTS	2.000	4.000

Waste Parameters

Waste Parameter	Remaining Weight %	Actual Weight Lbs
Iron-based Metals/Alloys	100.000	113.310
Aluminum-based Metals/Alloys	0.000	0.000
Other metals	0.000	0.000
Other Inorganic Materials	0.000	0.000
Cellulosics	0.000	5.940
Rubber	0.000	0.000
Plastic (Waste Materials)	0.000	4.690
Inorganic matrix	0.000	0.000
Organic matrix	0.000	0.000
Soils/gravel	0.000	0.000
Steel (packaging materials)	0.000	26.000
Plastic (packaging materials)	0.000	0.000
Cellulosics Packaging	0.000	0.000
MLLW Waste	0.000	0.000

Esignature History

Esig Approval Id	User Id	E-signature Date	Comment
2801396	HSHELL	03-AUG-14 12:41:55	
2801397	JBAILEY	03-AUG-14 12:41:57	

Batch Id VEB14-00212 **Container Id** 10523865 **Analysis Id** 0000320195

VE Date 03-AUG-14 12:59:41 **Analysis Status** Pass

Gen-IDC Code BN-508 AMWTP Newly Generated Debris **VE Weight** 121.28 **lbs.**

Closure Date 03-AUG-14 12:59:41 **Procedure Id** INST-FOI-17 **Net Weight** 95.28 **lbs.**

Container Type 55 **Revision** 27

Operator 1 HOWARD SHELL **Waste Matrix** S5490 **Summary Category Group** S5000

Operator 2 JEFFREY K BAILEY **Equipment ID** VE BiD RPCK

General

Rigid Liner Present? No **Liner Type** NO LINER **Closure Method** No Bags

Liner Punctured? Yes **Layers Of Confinement** 0 **Fill Factor** 65 % **Liner Lid Present** No

Liquids

Liquids Present? No **Comment**

Liquid Between Liner and Drum 0 pints **Other Liquids** 0 pints

Containerized Liquid pints **Total Liquid Amount** 0 pints

Internal Container with Liquid 0 pints

Internal Container with Liquid No

Prohibited Liquids Present No

Containerized Liquid

Contents

Sharp Objects? Yes **Are Sharp Objects Protected?** No

	Value	*Comment*
Prohibited Compressed Gas Present?	No	
Explosives Present?	No	
Pyrophorics Present?	No	
Mercury Present?	No	
PCBs Present?	No	
PCB Mass (lbs)	0	
Wet Cell Batteries Present?	No	
Corrosives,Ignitables or Reactives Present?	No	
Beryllium Contaminates Present?	No	
Hazardous-Only Waste Present?	No	
Is Waste Incompatible with backfill, packaging materials, or shipping container materials?	No	
Sealed Containers Over 4L?	No	

IDC Verification

Is IDC correct? Yes **Recommended IDC** -

IDC Change Reason

Visual Exam Comment The remaining waste by weight percent is Iron Based Metal Alloy consisting of scrap metal.

Batch Id VEB14-00212 **Container Id** 10523865 **Analysis Id** 0000320195

---Source Container---

Is there a source container? Yes

Source Container ID	Location	IDC
10035135	destroyed @ 676- BXI/9	AE-100

---IDC CODES---

Current Container IDC Code: BN-508 **Recommended IDC Code:** -

---Waste Material Items---

---Packaging Materials---

Material Item	Quantity	Unit	Unit Wt	Item Wt(lbs)

---Waste Items by Weight---

Material Item	Quantity	Unit	Unit Wt	Item Wt(lbs)

---Waste Items by Volume---

Material Item	Quantity	Unit	Unit Wt	Item Wt(lbs)
Plastic	2.000	PINTS	0.937	1.870
Fiberglass	3.000	PINTS	0.500	1.500

---Waste Parameters---

Waste Parameter	Remaining Weight %	Actual Weight Lbs
Iron-based Metals/Alloys	100.000	91.905
Aluminum-based Metals/Alloys	0.000	0.000
Other metals	0.000	0.000
Other Inorganic Materials	0.000	1.500
Cellulosics	0.000	0.000
Rubber	0.000	0.000
Plastic (Waste Materials)	0.000	1.870
Inorganic matrix	0.000	0.000
Organic matrix	0.000	0.000
Soils/gravel	0.000	0.000
Steel (packaging materials)	0.000	26.000
Plastic (packaging materials)	0.000	0.000
Cellulosics Packaging	0.000	0.000
MLLW Waste	0.000	0.000

---Esignature History---

Esig Approval Id	User Id	E-signature Date	Comment
2801405	HSHELL	03-AUG-14 12:59:41	
2801406	JBAILEY	03-AUG-14 12:59:45	

Batch Id VEB14-00212 **Container Id** 10524362 **Analysis Id** 0000320197

VE Date 03-AUG-14 16:41:44 **Analysis Status** Pass

Gen-IDC Code BN-508 AMWTP Newly Generated Debris **VE Weight** 152.15 lbs.

Closure Date 03-AUG-14 16:41:44 **Procedure Id** INST-FOI-17 **Net Weight** 126.15 lbs.

Container Type 55 **Revision** 27

Operator 1 HOWARD SHELL **Waste Matrix** S5490 **Summary Category Group** S5000

Operator 2 JEFFREY K BAILEY **Equipment ID** VE BiD RPCK

---General---

Rigid Liner Present? No **Liner Type** NO LINER **Closure Method** No Bags

Liner Punctured? Yes **Layers Of Confinement** 0 **Fill Factor** 64 % **Liner Lid Present** No

---Liquids---

Liquids Present? No **Comment**

Liquid Between Liner and Drum 0 pints **Other Liquids** 0 pints

Containerized Liquid pints **Total Liquid Amount** 0 pints

Internal Container with Liquid 0 pints

Internal Container with Liquid No

Prohibited Liquids Present No

Containerized Liquid

---Contents---

Sharp Objects? Yes **Are Sharp Objects Protected?** No

	Value	*Comment*
Prohibited Compressed Gas Present?	No	
Explosives Present?	No	
Pyrophorics Present?	No	
Mercury Present?	No	
PCBs Present?	No	
PCB Mass (lbs)	0	
Wet Cell Batteries Present?	No	
Corrosives,Ignitables or Reactives Present?	No	
Beryllium Contaminates Present?	No	
Hazardous-Only Waste Present?	No	
Is Waste Incompatible with backfill, packaging materials, or shipping container materials?	No	
Sealed Containers Over 4L?	No	

---IDC Verification---

Is IDC correct? Yes **Recommended IDC** -

IDC Change Reason

Visual Exam Comment The remaining waste by weight percent is Iron Based Metal Alloy consisting of scrap metal.

VE Boxline and Repackaging Report

Batch Id VEB14-00212 **Container Id** 10524362 **Analysis Id** 0000320197

Source Container

Is there a source container? Yes

Source Container ID	Location	IDC
10035135	destroyed @ 676- BXI/9	AE-100

IDC CODES

Current Container IDC Code: BN-508 **Recommended IDC Code:** -

Waste Material Items

Packaging Materials

Material Item	Quantity	Unit	Unit Wt	Item Wt(lbs)

Waste Items by Weight

Material Item	Quantity	Unit	Unit Wt	Item Wt(lbs)

Waste Items by Volume

Material Item	Quantity	Unit	Unit Wt	Item Wt(lbs)

Waste Parameters

Waste Parameter	Remaining Weight %	Actual Weight Lbs
Iron-based Metals/Alloys	100.000	126.145
Aluminum-based Metals/Alloys	0.000	0.000
Other metals	0.000	0.000
Other Inorganic Materials	0.000	0.000
Cellulosics	0.000	0.000
Rubber	0.000	0.000
Plastic (Waste Materials)	0.000	0.000
Inorganic matrix	0.000	0.000
Organic matrix	0.000	0.000
Soils/gravel	0.000	0.000
Steel (packaging materials)	0.000	26.000
Plastic (packaging materials)	0.000	0.000
Cellulosics Packaging	0.000	0.000
MLLW Waste	0.000	0.000

Esignature History

Esig Approval Id	User Id	E-signature Date	Comment
2801509	HSHELL	03-AUG-14 16:41:45	
2801510	JBAILEY	03-AUG-14 16:41:48	

Batch Id VEB14-00212 **Container Id** 10523815 **Analysis Id** 0000320198

VE Date 03-AUG-14 16:51:55 **Analysis Status** Pass

Gen-IDC Code BN-508 AMWTP Newly Generated Debris **VE Weight** 266.81 lbs.

Closure Date 03-AUG-14 16:51:55 **Procedure Id** INST-FOI-17 **Net Weight** 240.81 lbs.

Container Type 55 **Revision** 27

Operator 1 HOWARD SHELL **Waste Matrix** S5490 **Summary Category Group** S5000

Operator 2 JEFFREY K BAILEY **Equipment ID** VE BiD RPCK

General

Rigid Liner Present? No **Liner Type** NO LINER **Closure Method** No Bags

Liner Punctured? Yes **Layers Of Confinement** 0 **Fill Factor** 66 % **Liner Lid Present** No

Liquids

Liquids Present? No **Comment**

Liquid Between Liner and Drum 0 pints **Other Liquids** 0 pints

Containerized Liquid pints **Total Liquid Amount** 0 pints

Internal Container with Liquid 0 pints

Internal Container with Liquid No

Prohibited Liquids Present No

Containerized Liquid

Contents

Sharp Objects? Yes **Are Sharp Objects Protected?** No

	Value	*Comment*
Prohibited Compressed Gas Present?	No	
Explosives Present?	No	
Pyrophorics Present?	No	
Mercury Present?	No	
PCBs Present?	No	
PCB Mass (lbs)	0	
Wet Cell Batteries Present?	No	
Corrosives,Ignitables or Reactives Present?	No	
Beryllium Contaminates Present?	No	
Hazardous-Only Waste Present?	No	
Is Waste Incompatible with backfill, packaging materials, or shipping container materials?	No	
Sealed Containers Over 4L?	No	

IDC Verification

Is IDC correct? Yes **Recommended IDC** -

IDC Change Reason

Visual Exam Comment The remaining waste by weight percent is Iron Based Metal Alloy consisting of scrap metal.

Batch Id VEB14-00212 **Container Id** 10523815 **Analysis Id** 0000320198

Source Container

Is there a source container? Yes

Source Container ID	Location	IDC
10035135	destroyed @ 676- BXI/9	AE-100

IDC CODES

Current Container IDC Code: BN-508 **Recommended IDC Code:** -

Waste Material Items

Packaging Materials

Material Item	Quantity	Unit	Unit Wt	Item Wt(lbs)

Waste Items by Weight

Material Item	Quantity	Unit	Unit Wt	Item Wt(lbs)

Waste Items by Volume

Material Item	Quantity	Unit	Unit Wt	Item Wt(lbs)
Debris Sweepings	2.000	PINTS	1.000	2.000

Waste Parameters

Waste Parameter	Remaining Weight %	Actual Weight Lbs
Iron-based Metals/Alloys	100.000	238.805
Aluminum-based Metals/Alloys	0.000	0.000
Other metals	0.000	0.000
Other Inorganic Materials	0.000	2.000
Cellulosics	0.000	0.000
Rubber	0.000	0.000
Plastic (Waste Materials)	0.000	0.000
Inorganic matrix	0.000	0.000
Organic matrix	0.000	0.000
Soils/gravel	0.000	0.000
Steel (packaging materials)	0.000	26.000
Plastic (packaging materials)	0.000	0.000
Cellulosics Packaging	0.000	0.000
MLLW Waste	0.000	0.000

Esignature History

Esig Approval Id	User Id	E-signature Date	Comment
2801521	HSHELL	03-AUG-14 16:51:55	
2801522	JBAILEY	03-AUG-14 16:51:55	

Batch Id VEB14-00212 **Container Id** 10524339 **Analysis Id** 0000320199

VE Date 03-AUG-14 17:01:17 **Analysis Status** Pass

Gen-IDC Code BN-508 AMWTP Newly Generated Debris **VE Weight** 169.79 **lbs.**

Closure Date 03-AUG-14 17:01:17 **Procedure Id** INST-FOI-17 **Net Weight** 143.79 **lbs.**

Container Type 55 **Revision** 27

Operator 1 HOWARD SHELL **Waste Matrix** S5490 **Summary Category Group** S5000

Operator 2 JEFFREY K BAILEY **Equipment ID** VE BiD RPCK

General

Rigid Liner Present? No **Liner Type** NO LINER **Closure Method** No Bags

Liner Punctured? Yes **Layers Of Confinement** 0 **Fill Factor** 60 % **Liner Lid Present** No

Liquids

Liquids Present? No **Comment**

Liquid Between Liner and Drum 0 pints **Other Liquids** 0 pints

Containerized Liquid pints **Total Liquid Amount** 0 pints

Internal Container with Liquid 0 pints

Internal Container with Liquid No

Prohibited Liquids Present No

Containerized Liquid

Contents

Sharp Objects? Yes **Are Sharp Objects Protected?** No

	Value	*Comment*
Prohibited Compressed Gas Present?	No	
Explosives Present?	No	
Pyrophorics Present?	No	
Mercury Present?	No	
PCBs Present?	No	
PCB Mass (lbs)	0	
Wet Cell Batteries Present?	No	
Corrosives,Ignitables or Reactives Present?	No	
Beryllium Contaminates Present?	No	
Hazardous-Only Waste Present?	No	
Is Waste Incompatible with backfill, packaging materials, or shipping container materials?	No	
Sealed Containers Over 4L?	No	

IDC Verification

Is IDC correct? Yes **Recommended IDC** -

IDC Change Reason

Visual Exam Comment The remaining waste by weight percent is Iron Based Metal Alloy consisting of scrap metal.

Batch Id VEB14-00212 **Container Id** 10524339 **Analysis Id** 0000320199

Source Container

Is there a source container? Yes

Source Container ID	Location	IDC
10035135	destroyed @ 676- BXI/9	AE-100

IDC CODES

Current Container IDC Code: BN-508 **Recommended IDC Code:** -

Waste Material Items

Packaging Materials

Material Item	Quantity	Unit	Unit Wt	Item Wt(lbs)

Waste Items by Weight

Material Item	Quantity	Unit	Unit Wt	Item Wt(lbs)

Waste Items by Volume

Material Item	Quantity	Unit	Unit Wt	Item Wt(lbs)
Debris Sweepings	1.000	PINTS	1.000	1.000

Waste Parameters

Waste Parameter	Remaining Weight %	Actual Weight Lbs
Iron-based Metals/Alloys	100.000	142.785
Aluminum-based Metals/Alloys	0.000	0.000
Other metals	0.000	0.000
Other Inorganic Materials	0.000	1.000
Cellulosics	0.000	0.000
Rubber	0.000	0.000
Plastic (Waste Materials)	0.000	0.000
Inorganic matrix	0.000	0.000
Organic matrix	0.000	0.000
Soils/gravel	0.000	0.000
Steel (packaging materials)	0.000	26.000
Plastic (packaging materials)	0.000	0.000
Cellulosics Packaging	0.000	0.000
MLLW Waste	0.000	0.000

Esignature History

Esig Approval Id	User Id	E-signature Date	Comment
2801529	HSHELL	03-AUG-14 17:01:17	
2801530	JBAILEY	03-AUG-14 17:01:20	

Batch Id VEB14-00212 **Container Id** 10523883 **Analysis Id** 0000320200

VE Date 03-AUG-14 17:12:58 **Analysis Status** Pass

Gen-IDC Code BN-508 AMWTP Newly Generated Debris **VE Weight** 194.04 lbs.

Closure Date 03-AUG-14 17:12:58 **Procedure Id** INST-FOI-17 **Net Weight** 168.04 lbs.

Container Type 55 **Revision** 27

Operator 1 HOWARD SHELL **Waste Matrix** S5490 **Summary Category Group** S5000

Operator 2 JEFFREY K BAILEY **Equipment ID** VE BiD RPCK

General

Rigid Liner Present? No **Liner Type** NO LINER **Closure Method** No Bags

Liner Punctured? Yes **Layers Of Confinement** 0 **Fill Factor** 55 % **Liner Lid Present** No

Liquids

Liquids Present? No **Comment**

Liquid Between Liner and Drum 0 pints **Other Liquids** 0 pints

Containerized Liquid pints **Total Liquid Amount** 0 pints

Internal Container with Liquid 0 pints

Internal Container with Liquid No

Prohibited Liquids Present No

Containerized Liquid

Contents

Sharp Objects? Yes **Are Sharp Objects Protected?** No

	Value	*Comment*
Prohibited Compressed Gas Present?	No	
Explosives Present?	No	
Pyrophorics Present?	No	
Mercury Present?	No	
PCBs Present?	No	
PCB Mass (lbs)	0	
Wet Cell Batteries Present?	No	
Corrosives,Ignitables or Reactives Present?	No	
Beryllium Contaminates Present?	No	
Hazardous-Only Waste Present?	No	
Is Waste Incompatible with backfill, packaging materials, or shipping container materials?	No	
Sealed Containers Over 4L?	No	

IDC Verification

Is IDC correct? Yes **Recommended IDC** -

IDC Change Reason

Visual Exam Comment The remaining waste by weight percent is Iron Based Metal Alloy consisting of scrap metal.

VE Boxline and Repackaging Report

Batch Id VEB14-00212 **Container Id** 10523883 **Analysis Id** 0000320200

Source Container

Is there a source container? Yes

Source Container ID	Location	IDC
10035135	destroyed @ 676- BXI/9	AE-100

IDC CODES

Current Container IDC Code: BN-508 **Recommended IDC Code:** -

Waste Material Items

Packaging Materials

Material Item	Quantity	Unit	Unit Wt	Item Wt(lbs)

Waste Items by Weight

Material Item	Quantity	Unit	Unit Wt	Item Wt(lbs)

Waste Items by Volume

Material Item	Quantity	Unit	Unit Wt	Item Wt(lbs)
Wood	1.000	PINTS	0.702	0.700
Plastic	1.000	PINTS	0.937	0.940

Waste Parameters

Waste Parameter	Remaining Weight %	Actual Weight Lbs
Iron-based Metals/Alloys	100.000	166.400
Aluminum-based Metals/Alloys	0.000	0.000
Other metals	0.000	0.000
Other Inorganic Materials	0.000	0.000
Cellulosics	0.000	0.700
Rubber	0.000	0.000
Plastic (Waste Materials)	0.000	0.940
Inorganic matrix	0.000	0.000
Organic matrix	0.000	0.000
Soils/gravel	0.000	0.000
Steel (packaging materials)	0.000	26.000
Plastic (packaging materials)	0.000	0.000
Cellulosics Packaging	0.000	0.000
MLLW Waste	0.000	0.000

Esignature History

Esig Approval Id	User Id	E-signature Date	Comment
2801540	HSHELL	03-AUG-14 17:12:58	
2801541	JBAILEY	03-AUG-14 17:13:00	

Batch Id VEB14-00212 **Container Id** 10523711 **Analysis Id** 0000320203

VE Date 03-AUG-14 20:07:37 **Analysis Status** Pass

Gen-IDC Code BN-508 AMWTP Newly Generated Debris **VE Weight** 145.53 **lbs.**

Closure Date 03-AUG-14 20:07:37 **Procedure Id** INST-FOI-17 **Net Weight** 119.53 **lbs.**

Container Type 55 **Revision** 27

Operator 1 REX BUSH **Waste Matrix** S5490 **Summary Category Group** S5000

Operator 2 TIM OZBURN **Equipment ID** VE BiD RPCK

General

Rigid Liner Present? No **Liner Type** NO LINER **Closure Method** No Bags

Liner Punctured? Yes **Layers Of Confinement** 0 **Fill Factor** 52 % **Liner Lid Present** No

Liquids

Liquids Present? No **Comment**

Liquid Between Liner and Drum 0 pints **Other Liquids** 0 pints

Containerized Liquid pints **Total Liquid Amount** 0 pints

Internal Container with Liquid 0 pints

Internal Container with Liquid No

Prohibited Liquids Present No

Containerized Liquid

Contents

Sharp Objects? Yes **Are Sharp Objects Protected?** No

	Value	*Comment*
Prohibited Compressed Gas Present?	No	
Explosives Present?	No	
Pyrophorics Present?	No	
Mercury Present?	No	
PCBs Present?	No	
PCB Mass (lbs)	0	
Wet Cell Batteries Present?	No	
Corrosives,Ignitables or Reactives Present?	No	
Beryllium Contaminates Present?	No	
Hazardous-Only Waste Present?	No	
Is Waste Incompatible with backfill, packaging materials, or shipping container materials?	No	
Sealed Containers Over 4L?	No	

IDC Verification

Is IDC correct? Yes **Recommended IDC** -

IDC Change Reason

Visual Exam Comment Remaining waste by weight percent is 100% Iron based metal alloys consisting of meta debris.

Batch Id VEB14-00212 **Container Id** 10523711 **Analysis Id** 0000320203

Source Container

Is there a source container? Yes

Source Container ID	Location	IDC
10035135	destroyed @ 676- BXI/9	AE-100

IDC CODES

Current Container IDC Code: BN-508 **Recommended IDC Code:** -

Waste Material Items

Packaging Materials

Material Item	Quantity	Unit	Unit Wt	Item Wt(lbs)

Waste Items by Weight

Material Item	Quantity	Unit	Unit Wt	Item Wt(lbs)

Waste Items by Volume

Material Item	Quantity	Unit	Unit Wt	Item Wt(lbs)
Rubber	10.000	PINTS	1.554	15.540
Wood	10.000	PINTS	0.702	7.020
Floor Sweepings	1.000	PINTS	1.000	1.000

Waste Parameters

Waste Parameter	Remaining Weight %	Actual Weight Lbs
Iron-based Metals/Alloys	100.000	95.970
Aluminum-based Metals/Alloys	0.000	0.000
Other metals	0.000	0.000
Other Inorganic Materials	0.000	1.000
Cellulosics	0.000	7.020
Rubber	0.000	15.540
Plastic (Waste Materials)	0.000	0.000
Inorganic matrix	0.000	0.000
Organic matrix	0.000	0.000
Soils/gravel	0.000	0.000
Steel (packaging materials)	0.000	26.000
Plastic (packaging materials)	0.000	0.000
Cellulosics Packaging	0.000	0.000
MLLW Waste	0.000	0.000

Esignature History

Esig Approval Id	User Id	E-signature Date	Comment
2801601	RBUSH1	03-AUG-14 20:07:37	
2801602	TOZBURN	03-AUG-14 20:07:40	

Batch Id VEB14-00212 **Container Id** 10524335 **Analysis Id** 0000320204

VE Date 03-AUG-14 20:12:10 **Analysis Status** Non Reportable

Gen-IDC Code BN-508 AMWTP Newly Generated Debris **VE Weight** lbs.

Closure Date 03-AUG-14 20:12:10 **Procedure Id** INST-FOI-17 **Net Weight** lbs.

Container Type 55 **Revision** 27

Operator 1 GUY MATLOCK **Waste Matrix** S5490 **Summary Category Group** S5000

Operator 2 ANTHONY CAIN **Equipment ID** VE BiD RPCK

General

Rigid Liner Present? No **Liner Type** NO LINER **Closure Method** No Bags

Liner Punctured? Yes **Layers Of Confinement** 0 **Fill Factor** 40 % **Liner Lid Present** No

Liquids

Liquids Present? No **Comment**

Liquid Between Liner and Drum 0 pints **Other Liquids** 0 pints

Containerized Liquid pints **Total Liquid Amount** 0 pints

Internal Container with Liquid 0 pints

Internal Container with Liquid No

Prohibited Liquids Present No

Containerized Liquid

Contents

Sharp Objects? Yes **Are Sharp Objects Protected?** No

	Value	*Comment*
Prohibited Compressed Gas Present?	No	
Explosives Present?	No	
Pyrophorics Present?	No	
Mercury Present?	No	
PCBs Present?	No	
PCB Mass (lbs)	0	
Wet Cell Batteries Present?	No	
Corrosives,Ignitables or Reactives Present?	No	
Beryllium Contaminates Present?	No	
Hazardous-Only Waste Present?	No	
Is Waste Incompatible with backfill, packaging materials, or shipping container materials?	No	
Sealed Containers Over 4L?	No	

IDC Verification

Is IDC correct? Yes **Recommended IDC** -

IDC Change Reason

Visual Exam Comment The remaining waste by weight percent is Iron Based Metal/Alloys consisting of scrap metal

Batch Id VEB14-00212 **Container Id** 10524335 **Analysis Id** 0000320204

Source Container

Is there a source container? Yes

Source Container ID	Location	IDC
10035138	destroyed @ 676- BXI/9	AE-100

IDC CODES

Current Container IDC Code: BN-508 **Recommended IDC Code:** -

Waste Material Items

Packaging Materials

Material Item	Quantity	Unit	Unit Wt	Item Wt(lbs)

Waste Items by Weight

Material Item	Quantity	Unit	Unit Wt	Item Wt(lbs)

Waste Items by Volume

Material Item	Quantity	Unit	Unit Wt	Item Wt(lbs)

Waste Parameters

Waste Parameter	Remaining Weight %	Actual Weight Lbs
Iron-based Metals/Alloys	100.000	0.000
Aluminum-based Metals/Alloys	0.000	0.000
Other metals	0.000	0.000
Other Inorganic Materials	0.000	0.000
Cellulosics	0.000	0.000
Rubber	0.000	0.000
Plastic (Waste Materials)	0.000	0.000
Inorganic matrix	0.000	0.000
Organic matrix	0.000	0.000
Soils/gravel	0.000	0.000
Steel (packaging materials)	0.000	0.000
Plastic (packaging materials)	0.000	0.000
Cellulosics Packaging	0.000	0.000
MLLW Waste	0.000	0.000

Esignature History

Esig Approval Id	User Id	E-signature Date	Comment
2801603	GMATLOCK	03-AUG-14 20:12:10	
2801604	TCAIN	03-AUG-14 20:12:11	

Batch Id VEB14-00212 **Container Id** 10523041 **Analysis Id** 0000320205

VE Date 03-AUG-14 20:20:35 **Analysis Status** Pass

Gen-IDC Code BN-508 AMWTP Newly Generated Debris **VE Weight** 119.07 lbs.

Closure Date 03-AUG-14 20:20:35 **Procedure Id** INST-FOI-17 **Net Weight** 93.07 lbs.

Container Type 55 **Revision** 27

Operator 1 REX BUSH **Waste Matrix** S5490 **Summary Category Group** S5000

Operator 2 TIM OZBURN **Equipment ID** VE BiD RPCK

General

Rigid Liner Present? No **Liner Type** NO LINER **Closure Method** No Bags

Liner Punctured? Yes **Layers Of Confinement** 0 **Fill Factor** 55 % **Liner Lid Present** No

Liquids

Liquids Present? No **Comment**

Liquid Between Liner and Drum 0 pints **Other Liquids** 0 pints

Containerized Liquid pints **Total Liquid Amount** 0 pints

Internal Container with Liquid 0 pints

Internal Container with Liquid No

Prohibited Liquids Present No

Containerized Liquid

Contents

Sharp Objects? Yes **Are Sharp Objects Protected?** No

	Value	*Comment*
Prohibited Compressed Gas Present?	No	
Explosives Present?	No	
Pyrophorics Present?	No	
Mercury Present?	No	
PCBs Present?	No	
PCB Mass (lbs)	0	
Wet Cell Batteries Present?	No	
Corrosives,Ignitables or Reactives Present?	No	
Beryllium Contaminates Present?	No	
Hazardous-Only Waste Present?	No	
Is Waste Incompatible with backfill, packaging materials, or shipping container materials?	No	
Sealed Containers Over 4L?	No	

IDC Verification

Is IDC correct? Yes **Recommended IDC** -

IDC Change Reason

Visual Exam Comment Remaining waste by weight percent is 100% Iron based metal alloys consisting of meta debris.

VE Boxline and Repackaging Report

Batch Id VEB14-00212 **Container Id** 10523041 **Analysis Id** 0000320205

Source Container

Is there a source container? Yes

Source Container ID	Location	IDC
10035135	destroyed @ 676- BXI/9	AE-100

IDC CODES

Current Container IDC Code: BN-508 **Recommended IDC Code:** -

Waste Material Items

Packaging Materials

Material Item	Quantity	Unit	Unit Wt	Item Wt(lbs)

Waste Items by Weight

Material Item	Quantity	Unit	Unit Wt	Item Wt(lbs)

Waste Items by Volume

Material Item	Quantity	Unit	Unit Wt	Item Wt(lbs)
Rubber	10.000	PINTS	1.554	15.540
Wood	10.000	PINTS	0.702	7.020
Plastic	1.000	PINTS	0.937	0.940
Floor Sweepings	1.000	PINTS	1.000	1.000

Waste Parameters

Waste Parameter	Remaining Weight %	Actual Weight Lbs
Iron-based Metals/Alloys	100.000	68.570
Aluminum-based Metals/Alloys	0.000	0.000
Other metals	0.000	0.000
Other Inorganic Materials	0.000	1.000
Cellulosics	0.000	7.020
Rubber	0.000	15.540
Plastic (Waste Materials)	0.000	0.940
Inorganic matrix	0.000	0.000
Organic matrix	0.000	0.000
Soils/gravel	0.000	0.000
Steel (packaging materials)	0.000	26.000
Plastic (packaging materials)	0.000	0.000
Cellulosics Packaging	0.000	0.000
MLLW Waste	0.000	0.000

Esignature History

Esig Approval Id	User Id	E-signature Date	Comment
2801605	RBUSH1	03-AUG-14 20:20:35	
2801606	TOZBURN	03-AUG-14 20:20:36	

Batch Id VEB14-00212 **Container Id** 10523681 **Analysis Id** 0000320206

VE Date 03-AUG-14 20:31:03 **Analysis Status** Pass

Gen-IDC Code BN-508 AMWTP Newly Generated Debris **VE Weight** 127.89 lbs.

Closure Date 03-AUG-14 20:31:03 **Procedure Id** INST-FOI-17 **Net Weight** 101.89 lbs.

Container Type 55 **Revision** 27

Operator 1 REX BUSH **Waste Matrix** S5490 **Summary Category Group** S5000

Operator 2 TIM OZBURN **Equipment ID** VE BiD RPCK

General

Rigid Liner Present? No **Liner Type** NO LINER **Closure Method** No Bags

Liner Punctured? Yes **Layers Of Confinement** 0 **Fill Factor** 53 % **Liner Lid Present** No

Liquids

Liquids Present? No **Comment**

Liquid Between Liner and Drum 0 pints **Other Liquids** 0 pints

Containerized Liquid pints **Total Liquid Amount** 0 pints

Internal Container with Liquid 0 pints

Internal Container with Liquid No

Prohibited Liquids Present No

Containerized Liquid

Contents

Sharp Objects? Yes **Are Sharp Objects Protected?** No

	Value	*Comment*
Prohibited Compressed Gas Present?	No	
Explosives Present?	No	
Pyrophorics Present?	No	
Mercury Present?	No	
PCBs Present?	No	
PCB Mass (lbs)	0	
Wet Cell Batteries Present?	No	
Corrosives,Ignitables or Reactives Present?	No	
Beryllium Contaminates Present?	No	
Hazardous-Only Waste Present?	No	
Is Waste Incompatible with backfill, packaging materials, or shipping container materials?	No	
Sealed Containers Over 4L?	No	

IDC Verification

Is IDC correct? Yes **Recommended IDC** -

IDC Change Reason

Visual Exam Comment Remaining waste by weight percent is 100% Iron based metal alloys consisting of metal debris.

Batch Id VEB14-00212 **Container Id** 10523681 **Analysis Id** 0000320206

Source Container

Is there a source container? Yes

Source Container ID	Location	IDC
10035135	destroyed @ 676- BXI/9	AE-100

IDC CODES

Current Container IDC Code: BN-508 **Recommended IDC Code:** -

Waste Material Items

Packaging Materials

Material Item	Quantity	Unit	Unit Wt	Item Wt(lbs)

Waste Items by Weight

Material Item	Quantity	Unit	Unit Wt	Item Wt(lbs)

Waste Items by Volume

Material Item	Quantity	Unit	Unit Wt	Item Wt(lbs)
Wood	6.000	PINTS	0.702	4.210
Plastic	3.000	PINTS	0.937	2.810

Waste Parameters

Waste Parameter	Remaining Weight %	Actual Weight Lbs
Iron-based Metals/Alloys	100.000	94.870
Aluminum-based Metals/Alloys	0.000	0.000
Other metals	0.000	0.000
Other Inorganic Materials	0.000	0.000
Cellulosics	0.000	4.210
Rubber	0.000	0.000
Plastic (Waste Materials)	0.000	2.810
Inorganic matrix	0.000	0.000
Organic matrix	0.000	0.000
Soils/gravel	0.000	0.000
Steel (packaging materials)	0.000	26.000
Plastic (packaging materials)	0.000	0.000
Cellulosics Packaging	0.000	0.000
MLLW Waste	0.000	0.000

Esignature History

Esig Approval Id	User Id	E-signature Date	Comment
2801611	RBUSH1	03-AUG-14 20:31:03	
2801612	TOZBURN	03-AUG-14 20:31:05	

Batch Id VEB14-00212 **Container Id** 10523820 **Analysis Id** 0000320207

VE Date 03-AUG-14 20:58:03 **Analysis Status** Pass

Gen-IDC Code BN-508 AMWTP Newly Generated Debris **VE Weight** 125.69 **lbs.**

Closure Date 03-AUG-14 20:58:03 **Procedure Id** INST-FOI-17 **Net Weight** 99.69 **lbs.**

Container Type 55 **Revision** 27

Operator 1 GUY MATLOCK **Waste Matrix** S5490 **Summary Category Group** S5000

Operator 2 ANTHONY CAIN **Equipment ID** VE BiD RPCK

---General---

Rigid Liner Present? No **Liner Type** NO LINER **Closure Method** No Bags

Liner Punctured? Yes **Layers Of Confinement** 0 **Fill Factor** 65 % **Liner Lid Present** No

---Liquids---

Liquids Present? No **Comment**

Liquid Between Liner and Drum 0 pints **Other Liquids** 0 pints

Containerized Liquid pints **Total Liquid Amount** 0 pints

Internal Container with Liquid 0 pints

Internal Container with Liquid No

Prohibited Liquids Present No

Containerized Liquid

---Contents---

Sharp Objects? Yes **Are Sharp Objects Protected?** No

	Value	*Comment*
Prohibited Compressed Gas Present?	No	
Explosives Present?	No	
Pyrophorics Present?	No	
Mercury Present?	No	
PCBs Present?	No	
PCB Mass (lbs)	0	
Wet Cell Batteries Present?	No	
Corrosives,Ignitables or Reactives Present?	No	
Beryllium Contaminates Present?	No	
Hazardous-Only Waste Present?	No	
Is Waste Incompatible with backfill, packaging materials, or shipping container materials?	No	
Sealed Containers Over 4L?	No	

---IDC Verification---

Is IDC correct? Yes **Recommended IDC** -

IDC Change Reason

Visual Exam Comment The remaining waste by weight percent is Iron Based Metal/Alloys consisting of scrap metal

VE Boxline and Repackaging Report

Batch Id VEB14-00212 **Container Id** 10523820 **Analysis Id** 0000320207

Source Container

Is there a source container? Yes

Source Container ID	Location	IDC
10035138	destroyed @ 676- BXI/9	AE-100

IDC CODES

Current Container IDC Code: BN-508 **Recommended IDC Code:** -

Waste Material Items

Packaging Materials

Material Item	Quantity	Unit	Unit Wt	Item Wt(lbs)

Waste Items by Weight

Material Item	Quantity	Unit	Unit Wt	Item Wt(lbs)

Waste Items by Volume

Material Item	Quantity	Unit	Unit Wt	Item Wt(lbs)
Rubber	2.000	PINTS	1.554	3.110
Plastic	10.000	PINTS	0.937	9.370
Cloth Material	2.000	PINTS	2.000	4.000

Waste Parameters

Waste Parameter	Remaining Weight %	Actual Weight Lbs
Iron-based Metals/Alloys	100.000	83.205
Aluminum-based Metals/Alloys	0.000	0.000
Other metals	0.000	0.000
Other Inorganic Materials	0.000	0.000
Cellulosics	0.000	4.000
Rubber	0.000	3.110
Plastic (Waste Materials)	0.000	9.370
Inorganic matrix	0.000	0.000
Organic matrix	0.000	0.000
Soils/gravel	0.000	0.000
Steel (packaging materials)	0.000	26.000
Plastic (packaging materials)	0.000	0.000
Cellulosics Packaging	0.000	0.000
MLLW Waste	0.000	0.000

Esignature History

Esig Approval Id	User Id	E-signature Date	Comment
2801618	GMATLOCK	03-AUG-14 20:58:03	
2801619	TCAIN	03-AUG-14 20:58:06	

Batch Id VEB14-00212 **Container Id** 10523839 **Analysis Id** 0000320208

VE Date 03-AUG-14 21:11:11 **Analysis Status** Pass

Gen-IDC Code BN-508 AMWTP Newly Generated Debris **VE Weight** 154.35 lbs.

Closure Date 03-AUG-14 21:11:11 **Procedure Id** INST-FOI-17 **Net Weight** 128.35 lbs.

Container Type 55 **Revision** 27

Operator 1 REX BUSH **Waste Matrix** S5490 **Summary Category Group** S5000

Operator 2 TIM OZBURN **Equipment ID** VE BiD RPCK

General

Rigid Liner Present? No **Liner Type** NO LINER **Closure Method** No Bags

Liner Punctured? Yes **Layers Of Confinement** 0 **Fill Factor** 58 % **Liner Lid Present** No

Liquids

Liquids Present? No **Comment**

Liquid Between Liner and Drum 0 pints **Other Liquids** 0 pints

Containerized Liquid pints **Total Liquid Amount** 0 pints

Internal Container with Liquid 0 pints

Internal Container with Liquid No

Prohibited Liquids Present No

Containerized Liquid

Contents

Sharp Objects? Yes **Are Sharp Objects Protected?** No

	Value	*Comment*
Prohibited Compressed Gas Present?	No	
Explosives Present?	No	
Pyrophorics Present?	No	
Mercury Present?	No	
PCBs Present?	No	
PCB Mass (lbs)	0	
Wet Cell Batteries Present?	No	
Corrosives,Ignitables or Reactives Present?	No	
Beryllium Contaminates Present?	No	
Hazardous-Only Waste Present?	No	
Is Waste Incompatible with backfill, packaging materials, or shipping container materials?	No	
Sealed Containers Over 4L?	No	

IDC Verification

Is IDC correct? Yes **Recommended IDC** -

IDC Change Reason

Visual Exam Comment Remaining waste by weight percent is 100% Iron based metal alloys consisting of metal debris.

VE Boxline and Repackaging Report

Batch Id VEB14-00212 **Container Id** 10523839 **Analysis Id** 0000320208

Source Container

Is there a source container? Yes

Source Container ID	Location	IDC
10035135	destroyed @ 676- BXI/9	AE-100

IDC CODES

Current Container IDC Code: BN-508 **Recommended IDC Code:** -

Waste Material Items

Packaging Materials

Material Item	Quantity	Unit	Unit Wt	Item Wt(lbs)

Waste Items by Weight

Material Item	Quantity	Unit	Unit Wt	Item Wt(lbs)

Waste Items by Volume

Material Item	Quantity	Unit	Unit Wt	Item Wt(lbs)
Wood	10.000	PINTS	0.702	7.020

Waste Parameters

Waste Parameter	Remaining Weight %	Actual Weight Lbs
Iron-based Metals/Alloys	100.000	121.330
Aluminum-based Metals/Alloys	0.000	0.000
Other metals	0.000	0.000
Other Inorganic Materials	0.000	0.000
Cellulosics	0.000	7.020
Rubber	0.000	0.000
Plastic (Waste Materials)	0.000	0.000
Inorganic matrix	0.000	0.000
Organic matrix	0.000	0.000
Soils/gravel	0.000	0.000
Steel (packaging materials)	0.000	26.000
Plastic (packaging materials)	0.000	0.000
Cellulosics Packaging	0.000	0.000
MLLW Waste	0.000	0.000

Esignature History

Esig Approval Id	User Id	E-signature Date	Comment
2801621	RBUSH1	03-AUG-14 21:11:11	
2801622	TOZBURN	03-AUG-14 21:11:14	

VE Boxline and Repackaging Report

Batch Id VEB14-00212 **Container Id** 10523840 **Analysis Id** 0000320209

VE Date 03-AUG-14 21:42:28 **Analysis Status** Pass

Gen-IDC Code BN-508 AMWTP Newly Generated Debris **VE Weight** 152.15 lbs.

Closure Date 03-AUG-14 21:42:28 **Procedure Id** INST-FOI-17 **Net Weight** 126.15 lbs.

Container Type 55 **Revision** 27

Operator 1 REX BUSH **Waste Matrix** S5490 **Summary Category Group** S5000

Operator 2 TIM OZBURN **Equipment ID** VE BiD RPCK

General

Rigid Liner Present? No **Liner Type** NO LINER **Closure Method** No Bags

Liner Punctured? Yes **Layers Of Confinement** 0 **Fill Factor** 51 % **Liner Lid Present** No

Liquids

Liquids Present? No **Comment**

Liquid Between Liner and Drum 0 pints **Other Liquids** 0 pints

Containerized Liquid pints **Total Liquid Amount** 0 pints

Internal Container with Liquid 0 pints

Internal Container with Liquid No

Prohibited Liquids Present No

Containerized Liquid

Contents

Sharp Objects? Yes **Are Sharp Objects Protected?** No

	Value	*Comment*
Prohibited Compressed Gas Present?	No	
Explosives Present?	No	
Pyrophorics Present?	No	
Mercury Present?	No	
PCBs Present?	No	
PCB Mass (lbs)	0	
Wet Cell Batteries Present?	No	
Corrosives,Ignitables or Reactives Present?	No	
Beryllium Contaminates Present?	No	
Hazardous-Only Waste Present?	No	
Is Waste Incompatible with backfill, packaging materials, or shipping container materials?	No	
Sealed Containers Over 4L?	No	

IDC Verification

Is IDC correct? Yes **Recommended IDC** -

IDC Change Reason

Visual Exam Comment Remaining waste by weight percent is 100% Iron based metal alloys consisting of metal debris.

Batch Id VEB14-00212 **Container Id** 10523840 **Analysis Id** 0000320209

Source Container

Is there a source container? Yes

Source Container ID	Location	IDC
10035135	destroyed @ 676- BXI/9	AE-100

IDC CODES

Current Container IDC Code: BN-508 **Recommended IDC Code:** -

Waste Material Items

Packaging Materials

Material Item	Quantity	Unit	Unit Wt	Item Wt(lbs)

Waste Items by Weight

Material Item	Quantity	Unit	Unit Wt	Item Wt(lbs)

Waste Items by Volume

Material Item	Quantity	Unit	Unit Wt	Item Wt(lbs)
Wood	2.000	PINTS	0.702	1.400

Waste Parameters

Waste Parameter	Remaining Weight %	Actual Weight Lbs
Iron-based Metals/Alloys	100.000	124.745
Aluminum-based Metals/Alloys	0.000	0.000
Other metals	0.000	0.000
Other Inorganic Materials	0.000	0.000
Cellulosics	0.000	1.400
Rubber	0.000	0.000
Plastic (Waste Materials)	0.000	0.000
Inorganic matrix	0.000	0.000
Organic matrix	0.000	0.000
Soils/gravel	0.000	0.000
Steel (packaging materials)	0.000	26.000
Plastic (packaging materials)	0.000	0.000
Cellulosics Packaging	0.000	0.000
MLLW Waste	0.000	0.000

Esignature History

Esig Approval Id	User Id	E-signature Date	Comment
2801624	RBUSH1	03-AUG-14 21:42:28	
2801625	TOZBURN	03-AUG-14 21:42:31	

Batch Id VEB14-00212 **Container Id** 10523889 **Analysis Id** 0000320210

VE Date 03-AUG-14 21:47:02 **Analysis Status** Pass

Gen-IDC Code BN-508 AMWTP Newly Generated Debris **VE Weight** 114.66 lbs.

Closure Date 03-AUG-14 21:47:02 **Procedure Id** INST-FOI-17 **Net Weight** 88.66 lbs.

Container Type 55 **Revision** 27

Operator 1 REX BUSH **Waste Matrix** S5490 **Summary Category Group** S5000

Operator 2 TIM OZBURN **Equipment ID** VE BiD RPCK

General

Rigid Liner Present? No **Liner Type** NO LINER **Closure Method** No Bags

Liner Punctured? Yes **Layers Of Confinement** 0 **Fill Factor** 48 % **Liner Lid Present** No

Liquids

Liquids Present? No **Comment**

Liquid Between Liner and Drum 0 pints **Other Liquids** 0 pints

Containerized Liquid pints **Total Liquid Amount** 0 pints

Internal Container with Liquid 0 pints

Internal Container with Liquid No

Prohibited Liquids Present No

Containerized Liquid

Contents

Sharp Objects? Yes **Are Sharp Objects Protected?** No

	Value	*Comment*
Prohibited Compressed Gas Present?	No	
Explosives Present?	No	
Pyrophorics Present?	No	
Mercury Present?	No	
PCBs Present?	No	
PCB Mass (lbs)	0	
Wet Cell Batteries Present?	No	
Corrosives,Ignitables or Reactives Present?	No	
Beryllium Contaminates Present?	No	
Hazardous-Only Waste Present?	No	
Is Waste Incompatible with backfill, packaging materials, or shipping container materials?	No	
Sealed Containers Over 4L?	No	

IDC Verification

Is IDC correct? Yes **Recommended IDC** -

IDC Change Reason

Visual Exam Comment Remaining waste by weight percent is 100% Iron based metal alloys consisting of metal debris.

Batch Id VEB14-00212 **Container Id** 10523889 **Analysis Id** 0000320210

Source Container

Is there a source container? Yes

Source Container ID	Location	IDC
10035135	destroyed @ 676- BXI/9	AE-100

IDC CODES

Current Container IDC Code: BN-508 **Recommended IDC Code:** -

Waste Material Items

Packaging Materials

Material Item	Quantity	Unit	Unit Wt	Item Wt(lbs)

Waste Items by Weight

Material Item	Quantity	Unit	Unit Wt	Item Wt(lbs)

Waste Items by Volume

Material Item	Quantity	Unit	Unit Wt	Item Wt(lbs)

Waste Parameters

Waste Parameter	Remaining Weight %	Actual Weight Lbs
Iron-based Metals/Alloys	100.000	88.660
Aluminum-based Metals/Alloys	0.000	0.000
Other metals	0.000	0.000
Other Inorganic Materials	0.000	0.000
Cellulosics	0.000	0.000
Rubber	0.000	0.000
Plastic (Waste Materials)	0.000	0.000
Inorganic matrix	0.000	0.000
Organic matrix	0.000	0.000
Soils/gravel	0.000	0.000
Steel (packaging materials)	0.000	26.000
Plastic (packaging materials)	0.000	0.000
Cellulosics Packaging	0.000	0.000
MLLW Waste	0.000	0.000

Esignature History

Esig Approval Id	User Id	E-signature Date	Comment
2801726	RBUSH1	03-AUG-14 21:47:02	
2801727	TOZBURN	03-AUG-14 21:47:04	

Batch Id VEB14-00212 **Container Id** 10523827 **Analysis Id** 0000320212

VE Date 03-AUG-14 21:57:41 **Analysis Status** Pass

Gen-IDC Code BN-508 AMWTP Newly Generated Debris **VE Weight** 136.71 lbs.

Closure Date 03-AUG-14 21:57:41 **Procedure Id** INST-FOI-17 **Net Weight** 110.71 lbs.

Container Type 55 **Revision** 27

Operator 1 GUY MATLOCK **Waste Matrix** S5490 **Summary Category Group** S5000

Operator 2 ANTHONY CAIN **Equipment ID** VE BiD RPCK

General

Rigid Liner Present? No **Liner Type** NO LINER **Closure Method** No Bags

Liner Punctured? Yes **Layers Of Confinement** 0 **Fill Factor** 70 % **Liner Lid Present** No

Liquids

Liquids Present? No **Comment**

Liquid Between Liner and Drum 0 pints **Other Liquids** 0 pints

Containerized Liquid pints **Total Liquid Amount** 0 pints

Internal Container with Liquid 0 pints

Internal Container with Liquid No

Prohibited Liquids Present No

Containerized Liquid

Contents

Sharp Objects? Yes **Are Sharp Objects Protected?** No

	Value	*Comment*
Prohibited Compressed Gas Present?	No	
Explosives Present?	No	
Pyrophorics Present?	No	
Mercury Present?	No	
PCBs Present?	No	
PCB Mass (lbs)	0	
Wet Cell Batteries Present?	No	
Corrosives,Ignitables or Reactives Present?	No	
Beryllium Contaminates Present?	No	
Hazardous-Only Waste Present?	No	
Is Waste Incompatible with backfill, packaging materials, or shipping container materials?	No	
Sealed Containers Over 4L?	No	

IDC Verification

Is IDC correct? Yes **Recommended IDC** -

IDC Change Reason

Visual Exam Comment The remaining waste by weight percent is Cellulosics consisting of cloth material, wood and paper, and Plastic Waste Material consisting of bags, sheeting, poly bottles and tape

AMWTP

VE Boxline and Repackaging Report

Date: 26-Sep-2014

Time: 15:08

Batch Id VEB14-00212 **Container Id** 10523827 **Analysis Id** 0000320212

Source Container

Is there a source container? Yes

Source Container ID	Location	IDC
10035138	destroyed @ 676- BXI/9	AE-100

IDC CODES

Current Container IDC Code: BN-508 **Recommended IDC Code:** -

Waste Material Items

Packaging Materials

Material Item	Quantity	Unit	Unit Wt	Item Wt(lbs)

Waste Items by Weight

Material Item	Quantity	Unit	Unit Wt	Item Wt(lbs)

Waste Items by Volume

Material Item	Quantity	Unit	Unit Wt	Item Wt(lbs)
Rubber	2.000	PINTS	1.554	3.110
Glass	2.000	PINTS	2.082	4.160
Iron	1.000	PINTS	7.807	7.810
Debris Sweepings	4.000	PINTS	1.000	4.000

Waste Parameters

Waste Parameter	Remaining Weight %	Actual Weight Lbs
Iron-based Metals/Alloys	0.000	7.810
Aluminum-based Metals/Alloys	0.000	0.000
Other metals	0.000	0.000
Other Inorganic Materials	0.000	8.160
Cellulosics	50.000	45.815
Rubber	0.000	3.110
Plastic (Waste Materials)	50.000	45.815
Inorganic matrix	0.000	0.000
Organic matrix	0.000	0.000
Soils/gravel	0.000	0.000
Steel (packaging materials)	0.000	26.000
Plastic (packaging materials)	0.000	0.000
Cellulosics Packaging	0.000	0.000
MLLW Waste	0.000	0.000

Esignature History

Esig Approval Id	User Id	E-signature Date	Comment
2801765	GMATLOCK	03-AUG-14 21:57:42	
2801766	TCAIN	03-AUG-14 21:57:45	

*****End of VE Boxline Report*****

AMWTP
Advanced Mixed Waste Treatment Project

AMWTP
Checklist Report

Date: 26-Sep-2014
Time: 15:08

Batch Id VEB14-00212 **Open Date** 03-AUG-14 **Close Date** 03-AUG-14

Reviewer KRISANN HUGHES **Approval Level** Independent Technical Reviewer
Approval Date 15-AUG-14 **Review Iteration** 1

Question Text	Answer	Requirement	Comment
1. Is the QA documentation for the Batch Data Reports complete and includes data reports and QC results? o VE Batch Coversheet o Table of Contents (manual review only) o VE Analysis Reports o Analytical Balance Calibration Check Sheet (Form-1215), if applicable (manual review only) o ITR Checklist (Form-1415, manual review only) o Batch Data Report Supplemental Comment Form (Form-1491, manual review only) o Associated NCRs (referenced in WTS) o Audio/Video Recording References, if applicable	Yes		
2. Are there 20 containers or less in the batch?	Yes		
3. Was each VE Operator qualified at the time of the VE event?	Yes		
4. Was a VE data form completed for each container in the batch?	Yes		
Was the data generated in a technically correct manner using the correct revision of INST-OI-34, Non-facility Visual Examination or INST-FOI-17, Facility Visual Examination Operations, as applicable.	Yes		
6. Was the correct revision of the procedure documented on each analysis report?	Yes		
7. Was the E-signature History review performed?	Yes		
8. Was guidance from VEE documented, as applicable?	N/A		
9. Does every drum reported in the batch have a valid audio/video recording (as applicable)?	N/A		
10. Does the physical form match the waste stream description, waste matrix code and IDC?	Yes		
11. Did the VE event result in an IDC/Waste Matrix Code change? If so, was an NCR initiated?	No		
12. Were the waste material parameters documented correctly?	Yes		
13. Was the presence or absence of prohibited items properly identified? o If prohibited items were identified, were NCRs initiated?	Yes		
14. Has the description of rigid liners and layers of confinement been properly documented?	Yes		
15. Was the drum age criteria (DAC) entered correctly and completely? o Closure Method(s) o Liner Puncture Status o Layers of Confinement o Closure Date o Packaging Configuration o Type and number of filters, as applicable o Liner hole presence and diameter, as applicable	Yes		
16. Have filters been installed or removed from drum as recorded in WTS, as applicable?	N/A		
17. Hand calculations and unit conversions are correct? o Does the packaging weight plus the net weight equal the gross weight of the drum in the estimated waste material parameters, and for the unit conversions that are entered by volume or weight?	Yes		
18. Were all units and significant figures used correct for all reported volumes/weights?	Yes		

Batch Id VEB14-00212 **Open Date** 03-AUG-14 **Close Date** 03-AUG-14

Reviewer KRISANN HUGHES **Approval Level** Independent Technical Reviewer

Approval Date 15-AUG-14 **Review Iteration** 1

Question Text	Answer	Requirement	Comment
19. Has the data been reviewed for transcription errors as appropriate?	Yes		
20. Were the Visual Examination QAOs met? o Precision o Accuracy o Completeness o Comparability	Yes		
21. Is each data form signed by qualified VE Operators, as applicable per the appropriate procedure being used?	Yes		
22. Was the audio/video check satisfactory, as applicable?	N/A		
23. Was the scale or balance check weight event satisfactory, as applicable?	N/A		
24. Are the QC weight checks within the tolerance of the scale or balance, as applicable?	N/A		
25. Were any NCRs generated for drums containing prohibited items or any nonconforming conditions that failed to meet DQOs or QAOs? o Include the NCRs as appropriate, in the Batch Data Report.	No		
26. Were the rework requirements clearly identified in WTS or on the BDR?	N/A		

Batch Id VEB14-00212 **Open Date** 03-AUG-14 **Close Date** 03-AUG-14

Reviewer NICK STYHL **Approval Level** SPM Data Validation

Approval Date 18-AUG-14 **Review Iteration** 1

Question Text	Answer	Requirement	Comment
(1) Has the batch received a Data Generation Level Independent Technical Review?	Yes	MP-TRUW-8.2, C3-10b(1)	
(2) Are the batch data review checklists complete?	Yes	MP-TRUW-8.2, C3-10b(1)	
(3) When identified, were PCBs, mercury, lead, or other hazardous contaminants consistent with the waste stream AK Summary Report(s) and/or AK documentation?	N/A	MP-TRUW-8.2, C4-3	None identified.
(4) Are any ignitable, corrosive, or reactive wastes identified?	No	MP-TRUW-8.2, C4-3	
(5) Are the packaging configurations identified on the VE consistent with the waste stream AK Summary Report(s) and/or AK documentation?	Yes	MP-TRUW-8.2, C4-3	
(6) Do the drums in this batch contain typical waste items consistent with waste stream AK Summary Report(s) and/or AK documentation?	Yes	MP-TRUW-8.2, C4-3	
(7) Are the Waste Matrix Codes and physical form descriptions consistent with AK?	Yes	MP-TRUW-8.2, C4-3	
(8) Have all AK discrepancies been resolved and have all AK Resolution checklists been approved? Reference all waste stream AK documentation used in review of this data package.	N/A	MP-TRUW-8.2, C4-3	No discrepancies. MP-TRUW-05, MP-TRUW-06
(9) Does the batch report identify the correct implementing procedure number and revision number used for this testing method?	Yes	MP-TRUW-8.2, C3-4 and Table C3-11	
(10) Have the Waste Matrix Code (WMC) and IDC for all drums in the batch remained the same as originally assigned by the historical designation? NOTE: If not, note the drum number in the comment field and notify the Acceptable Knowledge Expert (AKE) if an NCR does not exist for the WMC and IDC change.	Yes	MP-TRUW-8.2, C-3c and C1-4	The IDC/WMC and summary category for newly generated waste are assigned by the operators during the VE event.
(11) Does the physical form of the waste match the WMC, waste stream description, and identify the absence of prohibited items?	Yes	MP-TRUW-8.2, C-3c and C1-4	
(12) If observable liquids exist in the drum, is an estimate of quantity given?	N/A	MP-TRUW-8.2, C-3c and C1-4	No residual liquids exist.
(13) Precision: Have all discrepancies been reconciled between the operator and the ITR with regard to identification of WMC, liquids in excess of TSDF-WAC limits, and compressed gases?	Yes	MP-TRUW-8.2 C3-4b	
(14) Accuracy: Have all operators passed a comprehensive examination and demonstrated satisfactory performance in the presence of the VE expert during initial and subsequent qualifications?	Yes	MP-TRUW-8.2 C3-4b	
(15) Completeness: Has a validated VE data form been obtained for 100% of the waste containers subject to VE?	Yes	MP-TRUW-8.2 C3-4b	
(16) Comparability: Has the comparability of VE data from different operators been enhanced by use of standardized VE procedures and operator qualifications?	Yes	MP-TRUW-8.2 C3-4b	
(17) Does the data for all containers within this batch meet the review, validation, and verification requirements? · Are proper units (e.g. Liters or pounds) and significant figure used? · Is the BDR complete (all pages identified in the BDR and numbered according)? - VE Batch Coversheet - Table of Contents (manual review only) - VE Analysis Reports - Analytical Balance Calibration Checklist (if applicable) - ITR Checklist (Form-1415)	Yes	MP-TRUW-8.2, C3-10b and Table C3-11	

Batch Id VEB14-00212 **Open Date** 03-AUG-14 **Close Date** 03-AUG-14

Reviewer NICK STYHL **Approval Level** SPM Data Validation

Approval Date 18-AUG-14 **Review Iteration** 1

Question Text	Answer	Requirement	Comment
- Associated NCRs - Audio/Video Recordings (if applicable)			
(18) Do the drum reports contain the (a) Batch Data Report number and date, (b) waste container number (c)WMC, (d) implementing procedure and revision, (e) audio/video recording reference, (f) audio and video QC checks were performed and satisfactory, (g) verification that the physical form matches the waste stream description and WMC, (h) absence of prohibited items, (i) gross container weight, (j) waste material parameter weights, and (k) signature and date of examination (signatures of both operators when applicable)?	Yes	MP-TRUW-8.2, C1-4 and Table C3-11	Audio/Video recording and QC checks reference not applicable.
(19) Is the description of container contents detailed enough to provide verification of estimated weights for the waste matrix parameters identified?	Yes	MP-TRUW-8.2, C1-4 and Table C3-11	
(20) Is there a valid second weight check for every 10 items?	N/A	MP-TRUW-8.2, C1-4	Scales were not used during this VE event.
(21) Verification of two operator signatures when doing VE?	Yes	MP-TRUW-8.2, C-3d(1) and Table C3-11	
(22) Are there 20 or fewer containers in the batch?	Yes	MP-TRUW-8.2, C1-3 and C3-10	
(23) Review all NCRs (open and closed). Can the batch be approved?	Yes	MP-TRUW-8.2, C3-13	
(24) All data associated with this BDR is acceptable for signature release?	Yes	MP-TRUW-8.2, C3-10b and C3-10b(1)	

Batch Id VEB14-00212 **Open Date** 03-AUG-14 **Close Date** 03-AUG-14

Esignature History

Esig Approval ID	User ID	Esig Date	Approval Level	Comments
2815322	NSTYHL	18-AUG-14	SPM	Approve batch.
2812137	KHUGHES	15-AUG-14	ITR	promote to SPM

AMWTP
Advanced Mixed Waste Treatment Project

AMWTP

Non-Conformance Report

Date: 26-Sep-2014

Time: 15:13

*******Batch NCR(s)*******

Batch Type	VEB	**Batch ID**	VEB14-00212		
Trackwise Number		**Status**		**Opened Date**	**Closed Date**

*******Container NCR(s)*******

Container ID *or related Batch ID*	**Trackwise Number**	**Status**	**Opened Date**	**Closed Date**
10524335	88193	OPEN	21-AUG-14	

*******End of Non-Conformance Report*******

AMWTP
Advanced Mixed Waste Treatment Project

AMWTP

Scale Check Event Report

Date: 26-Sep-2014

Time: 15:13

Batch Id	VEB14-00212	**Container Id**	10523885
Batch Id	VEB14-00212	**Container Id**	10523681
Batch Id	VEB14-00212	**Container Id**	10523851
Batch Id	VEB14-00212	**Container Id**	10523820
Batch Id	VEB14-00212	**Container Id**	10523849
Batch Id	VEB14-00212	**Container Id**	10523041
Batch Id	VEB14-00212	**Container Id**	10523846
Batch Id	VEB14-00212	**Container Id**	10523887
Batch Id	VEB14-00212	**Container Id**	10524362
Batch Id	VEB14-00212	**Container Id**	10523815
Batch Id	VEB14-00212	**Container Id**	10523889
Batch Id	VEB14-00212	**Container Id**	10523855
Batch Id	VEB14-00212	**Container Id**	10523865
Batch Id	VEB14-00212	**Container Id**	10523840
Batch Id	VEB14-00212	**Container Id**	10524335
Batch Id	VEB14-00212	**Container Id**	10523827
Batch Id	VEB14-00212	**Container Id**	10524339
Batch Id	VEB14-00212	**Container Id**	10523711
Batch Id	VEB14-00212	**Container Id**	10523839
Batch Id	VEB14-00212	**Container Id**	10523883

DIVIDER

PAGE

AMWTP
Advanced Mixed Waste Treatment Project

AMWTP

Batch Report Coversheet

Date: 26-Sep-2014

Time: 15:31

Batch Type VE Boxline
Batch Report No. VEB14-00254
Batch Id VEB14-00254
Open Date 25-AUG-14 03:41:04
Close Date 25-AUG-14 21:56:15
Batch Status AP
Test Facility Idaho AMWTP

INFORMATION ONLY

Equipment Id VE BiD RPCK VE Box Repackaging Into Drums

Container Id	IDC	Analysis Id	Date Examined	QC Type	Analysis Status	Operator
10527579	BN-508	0000321401	25-AUG-14 03:41:04	Original	P	MICHAEL BECK
10527571	BN-508	0000321402	25-AUG-14 04:00:51	Original	P	MICHAEL BECK
10527580	BN-508	0000321406	25-AUG-14 04:49:59	Original	P	MICHAEL BECK
10527600	BN-508	0000321407	25-AUG-14 05:26:01	Original	P	MICHAEL BECK
10527955	BN-508	0000321408	25-AUG-14 07:56:30	Original	P	GUY MATLOCK
10527919	BN-508	0000321409	25-AUG-14 09:02:03	Original	P	GUY MATLOCK
10527940	BN-508	0000321410	25-AUG-14 09:45:36	Original	P	GUY MATLOCK
10527923	BN-508	0000321411	25-AUG-14 10:16:57	Original	P	GUY MATLOCK
10527935	BN-508	0000321414	25-AUG-14 10:41:57	Original	P	GUY MATLOCK
10527926	BN-508	0000321418	25-AUG-14 11:03:31	Original	P	ROBERT PURCELL
10527785	BN-508	0000321419	25-AUG-14 11:28:52	Original	P	ROBERT PURCELL
10527922	BN-508	0000321420	25-AUG-14 12:40:33	Original	P	ROBERT PURCELL
10527933	BN-508	0000321421	25-AUG-14 13:03:00	Original	P	ROBERT PURCELL
10527927	BN-508	0000321422	25-AUG-14 13:24:22	Original	P	ROBERT PURCELL
10527782	BN-508	0000321427	25-AUG-14 14:06:39	Original	P	ROBERT PURCELL
10527918	BN-508	0000321429	25-AUG-14 14:53:52	Original	P	GUY MATLOCK
10527956	BN-508	0000321433	25-AUG-14 15:23:20	Original	P	GUY MATLOCK
10527925	BN-508	0000321434	25-AUG-14 16:13:02	Original	P	GUY MATLOCK
10527943	BN-508	0000321440	25-AUG-14 16:48:17	Original	P	GUY MATLOCK
10527946	BN-508	0000321443	25-AUG-14 21:55:15	Original	P	HOWARD SHELL

**********Batch Comments**********

Written By	Date	Comment
RGRISE	26-AUG-14 07:51:49	Initial validation performed electronically per MP-TRUW-8.8
RGRISE	26-AUG-14 07:51:49	Promote batch to SPM level.
RWALKER	26-AUG-14 12:18:31	SPM validation complete. Promote batch.

Batch Report Coversheet

**********************Batch E-Signature History***********************

Approval ID	User ID	Signature Date	Comment
2819936	RGRISE	26-AUG-2014 07:51:50	Promote batch to SPM level.
2822550	RWALKER	26-AUG-2014 12:18:32	SPM validation complete. Promote batch.

******* End of Batch Report Coversheet Report *******

AMWTP
Advanced Mixed Waste Treatment Project

AMWTP

VE Boxline and Repackaging Report

Date: 26-Sep-2014

Time: 15:33

Batch Id VEB14-00254 **Container Id** 10527579 **Analysis Id** 0000321401

VE Date 25-AUG-14 03:41:04 **Analysis Status** Pass

Gen-IDC Code BN-508 AMWTP Newly Generated Debris **VE Weight** 143.33 lbs.

Closure Date 25-AUG-14 03:41:04 **Procedure Id** INST-FOI-17 **Net Weight** 117.33 lbs.

Container Type 55 **Revision** 27

Operator 1 MICHAEL BECK **Waste Matrix** S5490 **Summary Category Group** S5000

Operator 2 KEN DOWNS **Equipment ID** VE BiD RPCK

General

Rigid Liner Present? No **Liner Type** NO LINER **Closure Method** No Bags

Liner Punctured? Yes **Layers Of Confinement** 0 **Fill Factor** 75 % **Liner Lid Present** No

Liquids

Liquids Present? No **Comment**

Liquid Between Liner and Drum 0 pints **Other Liquids** 0 pints

Containerized Liquid pints **Total Liquid Amount** 0 pints

Internal Container with Liquid 0 pints

Internal Container with Liquid No

Prohibited Liquids Present No

Containerized Liquid

Contents

Sharp Objects? Yes **Are Sharp Objects Protected?** No

	Value	*Comment*
Prohibited Compressed Gas Present?	No	
Explosives Present?	No	
Pyrophorics Present?	No	
Mercury Present?	No	
PCBs Present?	No	
PCB Mass (lbs)	0	
Wet Cell Batteries Present?	No	
Corrosives,Ignitables or Reactives Present?	No	
Beryllium Contaminates Present?	No	
Hazardous-Only Waste Present?	No	
Is Waste Incompatible with backfill, packaging materials, or shipping container materials?	No	
Sealed Containers Over 4L?	No	

IDC Verification

Is IDC correct? Yes **Recommended IDC** -

IDC Change Reason

Visual Exam Comment Remaining waste by weight percent is Iron Based Metal / Alloy consisting of scrap metal.

VE Boxline and Repackaging Report

Batch Id VEB14-00254 **Container Id** 10527579 **Analysis Id** 0000321401

Source Container

Is there a source container? Yes

Source Container ID	Location	IDC
10526886	destroyed @ 676- BXI/9	BN-519

IDC CODES

Current Container IDC Code: BN-508 **Recommended IDC Code:** -

Waste Material Items

Packaging Materials

Material Item	Quantity	Unit	Unit Wt	Item Wt(lbs)

Waste Items by Weight

Material Item	Quantity	Unit	Unit Wt	Item Wt(lbs)

Waste Items by Volume

Material Item	Quantity	Unit	Unit Wt	Item Wt(lbs)
Oil-Dri (Inside 55 gal drum)	4.000	PINTS	0.420	1.680
Glass	2.000	PINTS	2.082	4.160
Plastic	10.000	PINTS	0.937	9.370

Waste Parameters

Waste Parameter	Remaining Weight %	Actual Weight Lbs
Iron-based Metals/Alloys	100.000	102.115
Aluminum-based Metals/Alloys	0.000	0.000
Other metals	0.000	0.000
Other Inorganic Materials	0.000	5.840
Cellulosics	0.000	0.000
Rubber	0.000	0.000
Plastic (Waste Materials)	0.000	9.370
Inorganic matrix	0.000	0.000
Organic matrix	0.000	0.000
Soils/gravel	0.000	0.000
Steel (packaging materials)	0.000	26.000
Plastic (packaging materials)	0.000	0.000
Cellulosics Packaging	0.000	0.000
MLLW Waste	0.000	0.000

Esignature History

Esig Approval Id	User Id	E-signature Date	Comment
2819178	MBECK1	25-AUG-14 03:41:05	
2819179	KDOWNS	25-AUG-14 03:41:07	

Batch Id VEB14-00254 **Container Id** 10527571 **Analysis Id** 0000321402

VE Date 25-AUG-14 04:00:51 **Analysis Status** Pass

Gen-IDC Code BN-508 AMWTP Newly Generated Debris **VE Weight** 174.20 lbs.

Closure Date 25-AUG-14 04:00:51 **Procedure Id** INST-FOI-17 **Net Weight** 148.20 lbs.

Container Type 55 **Revision** 27

Operator 1 MICHAEL BECK **Waste Matrix** S5490 **Summary Category Group** S5000

Operator 2 KEN DOWNS **Equipment ID** VE BiD RPCK

General

Rigid Liner Present? No **Liner Type** NO LINER **Closure Method** No Bags

Liner Punctured? Yes **Layers Of Confinement** 0 **Fill Factor** 70 % **Liner Lid Present** No

Liquids

Liquids Present? No **Comment**

Liquid Between Liner and Drum 0 pints **Other Liquids** 0 pints

Containerized Liquid pints **Total Liquid Amount** 0 pints

Internal Container with Liquid 0 pints

Internal Container with Liquid No

Prohibited Liquids Present No

Containerized Liquid

Contents

Sharp Objects? Yes **Are Sharp Objects Protected?** No

	Value	*Comment*
Prohibited Compressed Gas Present?	No	
Explosives Present?	No	
Pyrophorics Present?	No	
Mercury Present?	No	
PCBs Present?	No	
PCB Mass (lbs)	0	
Wet Cell Batteries Present?	No	
Corrosives,Ignitables or Reactives Present?	No	
Beryllium Contaminates Present?	No	
Hazardous-Only Waste Present?	No	
Is Waste Incompatible with backfill, packaging materials, or shipping container materials?	No	
Sealed Containers Over 4L?	No	

IDC Verification

Is IDC correct? Yes **Recommended IDC** -

IDC Change Reason

Visual Exam Comment Remaining waste by weight percent is Iron Based Metal / Alloy consisting of scrap metal.

VE Boxline and Repackaging Report

Advanced Mixed Waste Treatment Project

Batch Id VEB14-00254 **Container Id** 10527571 **Analysis Id** 0000321402

Source Container

Is there a source container? Yes

Source Container ID	Location	IDC
10526886	destroyed @ 676- BXI/9	BN-519

IDC CODES

Current Container IDC Code: BN-508 **Recommended IDC Code:** -

Waste Material Items

Packaging Materials

Material Item	Quantity	Unit	Unit Wt	Item Wt(lbs)

Waste Items by Weight

Material Item	Quantity	Unit	Unit Wt	Item Wt(lbs)

Waste Items by Volume

Material Item	Quantity	Unit	Unit Wt	Item Wt(lbs)
Oil-Dri (Inside 55 gal drum)	20.000	PINTS	0.420	8.400
Glass	4.000	PINTS	2.082	8.330
Plastic	2.000	PINTS	0.937	1.870

Waste Parameters

Waste Parameter	Remaining Weight %	Actual Weight Lbs
Iron-based Metals/Alloys	100.000	129.595
Aluminum-based Metals/Alloys	0.000	0.000
Other metals	0.000	0.000
Other Inorganic Materials	0.000	16.730
Cellulosics	0.000	0.000
Rubber	0.000	0.000
Plastic (Waste Materials)	0.000	1.870
Inorganic matrix	0.000	0.000
Organic matrix	0.000	0.000
Soils/gravel	0.000	0.000
Steel (packaging materials)	0.000	26.000
Plastic (packaging materials)	0.000	0.000
Cellulosics Packaging	0.000	0.000
MLLW Waste	0.000	0.000

Esignature History

Esig Approval Id	User Id	E-signature Date	Comment
2819192	MBECK1	25-AUG-14 04:00:52	
2819193	KDOWNS	25-AUG-14 04:00:54	

Batch Id VEB14-00254 **Container Id** 10527580 **Analysis Id** 0000321406

VE Date 25-AUG-14 04:49:59 **Analysis Status** Pass

Gen-IDC Code BN-508 AMWTP Newly Generated Debris **VE Weight** 130.10 lbs.

Closure Date 25-AUG-14 04:49:59 **Procedure Id** INST-FOI-17 **Net Weight** 104.10 lbs.

Container Type 55 **Revision** 27

Operator 1 MICHAEL BECK **Waste Matrix** S5490 **Summary Category Group** S5000

Operator 2 KEN DOWNS **Equipment ID** VE BiD RPCK

General

Rigid Liner Present? No **Liner Type** NO LINER **Closure Method** No Bags

Liner Punctured? Yes **Layers Of Confinement** 0 **Fill Factor** 70 % **Liner Lid Present** No

Liquids

Liquids Present? No **Comment**

Liquid Between Liner and Drum 0 pints **Other Liquids** 0 pints

Containerized Liquid pints **Total Liquid Amount** 0 pints

Internal Container with Liquid 0 pints

Internal Container with Liquid No

Prohibited Liquids Present No

Containerized Liquid

Contents

Sharp Objects? Yes **Are Sharp Objects Protected?** No

	Value	*Comment*
Prohibited Compressed Gas Present?	No	
Explosives Present?	No	
Pyrophorics Present?	No	
Mercury Present?	No	
PCBs Present?	No	
PCB Mass (lbs)	0	
Wet Cell Batteries Present?	No	
Corrosives,Ignitables or Reactives Present?	No	
Beryllium Contaminates Present?	No	
Hazardous-Only Waste Present?	No	
Is Waste Incompatible with backfill, packaging materials, or shipping container materials?	No	
Sealed Containers Over 4L?	No	

IDC Verification

Is IDC correct? Yes **Recommended IDC** -

IDC Change Reason

Visual Exam Comment Remaining waste by weight percent is Iron Based Metal / Alloy consisting of scrap metal.

VE Boxline and Repackaging Report

Batch Id VEB14-00254 **Container Id** 10527580 **Analysis Id** 0000321406

Source Container

Is there a source container? Yes

Source Container ID	Location	IDC
10526886	destroyed @ 676- BXI/9	BN-519

IDC CODES

Current Container IDC Code: BN-508 **Recommended IDC Code:** -

Waste Material Items

Packaging Materials

Material Item	Quantity	Unit	Unit Wt	Item Wt(lbs)

Waste Items by Weight

Material Item	Quantity	Unit	Unit Wt	Item Wt(lbs)

Waste Items by Volume

Material Item	Quantity	Unit	Unit Wt	Item Wt(lbs)
Paper	4.000	PINTS	0.969	3.880
Plastic	6.000	PINTS	0.937	5.620

Waste Parameters

Waste Parameter	Remaining Weight %	Actual Weight Lbs
Iron-based Metals/Alloys	100.000	94.595
Aluminum-based Metals/Alloys	0.000	0.000
Other metals	0.000	0.000
Other Inorganic Materials	0.000	0.000
Cellulosics	0.000	3.880
Rubber	0.000	0.000
Plastic (Waste Materials)	0.000	5.620
Inorganic matrix	0.000	0.000
Organic matrix	0.000	0.000
Soils/gravel	0.000	0.000
Steel (packaging materials)	0.000	26.000
Plastic (packaging materials)	0.000	0.000
Cellulosics Packaging	0.000	0.000
MLLW Waste	0.000	0.000

Esignature History

Esig Approval Id	User Id	E-signature Date	Comment
2819218	MBECK1	25-AUG-14 04:49:59	
2819219	KDOWNS	25-AUG-14 04:50:03	

Batch Id VEB14-00254 **Container Id** 10527600 **Analysis Id** 0000321407

VE Date 25-AUG-14 05:26:01 **Analysis Status** Pass

Gen-IDC Code BN-508 AMWTP Newly Generated Debris **VE Weight** 136.71 **lbs.**

Closure Date 25-AUG-14 05:26:01 **Procedure Id** INST-FOI-17 **Net Weight** 110.71 **lbs.**

Container Type 55 **Revision** 27

Operator 1 MICHAEL BECK **Waste Matrix** S5490 **Summary Category Group** S5000

Operator 2 KEN DOWNS **Equipment ID** VE BiD RPCK

---General---

Rigid Liner Present? No **Liner Type** NO LINER **Closure Method** No Bags

Liner Punctured? Yes **Layers Of Confinement** 0 **Fill Factor** 70 % **Liner Lid Present** No

---Liquids---

Liquids Present? No **Comment**

Liquid Between Liner and Drum 0 pints **Other Liquids** 0 pints

Containerized Liquid pints **Total Liquid Amount** 0 pints

Internal Container with Liquid 0 pints

Internal Container with Liquid No

Prohibited Liquids Present No

Containerized Liquid

---Contents---

Sharp Objects? Yes **Are Sharp Objects Protected?** No

	Value	*Comment*
Prohibited Compressed Gas Present?	No	
Explosives Present?	No	
Pyrophorics Present?	No	
Mercury Present?	No	
PCBs Present?	No	
PCB Mass (lbs)	0	
Wet Cell Batteries Present?	No	
Corrosives,Ignitables or Reactives Present?	No	
Beryllium Contaminates Present?	No	
Hazardous-Only Waste Present?	No	
Is Waste Incompatible with backfill, packaging materials, or shipping container materials?	No	
Sealed Containers Over 4L?	No	

---IDC Verification---

Is IDC correct? Yes **Recommended IDC** -

IDC Change Reason

Visual Exam Comment Remaining waste by weight percent is Iron Based Metal / Alloy consisting of scrap metal.

Batch Id VEB14-00254 **Container Id** 10527600 **Analysis Id** 0000321407

Source Container

Is there a source container? Yes

Source Container ID	Location	IDC
10526886	destroyed @ 676- BXI/9	BN-519

IDC CODES

Current Container IDC Code: BN-508 **Recommended IDC Code:** -

Waste Material Items

Packaging Materials

Material Item	Quantity	Unit	Unit Wt	Item Wt(lbs)

Waste Items by Weight

Material Item	Quantity	Unit	Unit Wt	Item Wt(lbs)

Waste Items by Volume

Material Item	Quantity	Unit	Unit Wt	Item Wt(lbs)
Oil-Dri (Inside 55 gal drum)	4.000	PINTS	0.420	1.680
Plastic	8.000	PINTS	0.937	7.500

Waste Parameters

Waste Parameter	Remaining Weight %	Actual Weight Lbs
Iron-based Metals/Alloys	100.000	101.530
Aluminum-based Metals/Alloys	0.000	0.000
Other metals	0.000	0.000
Other Inorganic Materials	0.000	1.680
Cellulosics	0.000	0.000
Rubber	0.000	0.000
Plastic (Waste Materials)	0.000	7.500
Inorganic matrix	0.000	0.000
Organic matrix	0.000	0.000
Soils/gravel	0.000	0.000
Steel (packaging materials)	0.000	26.000
Plastic (packaging materials)	0.000	0.000
Cellulosics Packaging	0.000	0.000
MLLW Waste	0.000	0.000

Esignature History

Esig Approval Id	User Id	E-signature Date	Comment
2819237	MBECK1	25-AUG-14 05:26:01	
2819238	KDOWNS	25-AUG-14 05:26:03	

Batch Id VEB14-00254 **Container Id** 10527955 **Analysis Id** 0000321408

VE Date 25-AUG-14 07:56:30 **Analysis Status** Pass

Gen-IDC Code BN-508 AMWTP Newly Generated Debris **VE Weight** 114.66 lbs.

Closure Date 25-AUG-14 07:56:30 **Procedure Id** INST-FOI-17 **Net Weight** 88.66 lbs.

Container Type 55 **Revision** 27

Operator 1 GUY MATLOCK **Waste Matrix** S5490 **Summary Category Group** S5000

Operator 2 ANTHONY CAIN **Equipment ID** VE BiD RPCK

General

Rigid Liner Present? No **Liner Type** NO LINER **Closure Method** No Bags

Liner Punctured? Yes **Layers Of Confinement** 0 **Fill Factor** 65 % **Liner Lid Present** No

Liquids

Liquids Present? No **Comment**

Liquid Between Liner and Drum 0 pints **Other Liquids** 0 pints

Containerized Liquid pints **Total Liquid Amount** 0 pints

Internal Container with Liquid 0 pints

Internal Container with Liquid No

Prohibited Liquids Present No

Containerized Liquid

Contents

Sharp Objects? Yes **Are Sharp Objects Protected?** No

	Value	*Comment*
Prohibited Compressed Gas Present?	No	
Explosives Present?	No	
Pyrophorics Present?	No	
Mercury Present?	No	
PCBs Present?	No	
PCB Mass (lbs)	0	
Wet Cell Batteries Present?	No	
Corrosives,Ignitables or Reactives Present?	No	
Beryllium Contaminates Present?	No	
Hazardous-Only Waste Present?	No	
Is Waste Incompatible with backfill, packaging materials, or shipping container materials?	No	
Sealed Containers Over 4L?	No	

IDC Verification

Is IDC correct? Yes **Recommended IDC** -

IDC Change Reason

Visual Exam Comment The remaining waste by weight percent is Iron Based Metals/Alloys consisting of scrap metal

VE Boxline and Repackaging Report

Batch Id VEB14-00254 **Container Id** 10527955 **Analysis Id** 0000321408

Source Container

Is there a source container? Yes

Source Container ID	Location	IDC
10526884	destroyed @ 676- BXI/9	BN-519

IDC CODES

Current Container IDC Code: BN-508 **Recommended IDC Code:** -

Waste Material Items

Packaging Materials

Material Item	Quantity	Unit	Unit Wt	Item Wt(lbs)

Waste Items by Weight

Material Item	Quantity	Unit	Unit Wt	Item Wt(lbs)

Waste Items by Volume

Material Item	Quantity	Unit	Unit Wt	Item Wt(lbs)
Oil-Dri (Inside 55 gal drum)	7.000	PINTS	0.420	2.940
Wood	10.000	PINTS	0.702	7.020
Plastic	3.000	PINTS	0.937	2.810

Waste Parameters

Waste Parameter	Remaining Weight %	Actual Weight Lbs
Iron-based Metals/Alloys	100.000	75.890
Aluminum-based Metals/Alloys	0.000	0.000
Other metals	0.000	0.000
Other Inorganic Materials	0.000	2.940
Cellulosics	0.000	7.020
Rubber	0.000	0.000
Plastic (Waste Materials)	0.000	2.810
Inorganic matrix	0.000	0.000
Organic matrix	0.000	0.000
Soils/gravel	0.000	0.000
Steel (packaging materials)	0.000	26.000
Plastic (packaging materials)	0.000	0.000
Cellulosics Packaging	0.000	0.000
MLLW Waste	0.000	0.000

Esignature History

Esig Approval Id	User Id	E-signature Date	Comment
2819347	GMATLOCK	25-AUG-14 07:56:31	
2819348	TCAIN	25-AUG-14 07:56:35	

Batch Id VEB14-00254 **Container Id** 10527919 **Analysis Id** 0000321409

VE Date 25-AUG-14 09:02:03 **Analysis Status** Pass

Gen-IDC Code BN-508 AMWTP Newly Generated Debris **VE Weight** 141.12 lbs.

Closure Date 25-AUG-14 09:02:03 **Procedure Id** INST-FOI-17 **Net Weight** 115.12 lbs.

Container Type 55 **Revision** 27

Operator 1 GUY MATLOCK **Waste Matrix** S5490 **Summary Category Group** S5000

Operator 2 ANTHONY CAIN **Equipment ID** VE BiD RPCK

General

Rigid Liner Present? No **Liner Type** NO LINER **Closure Method** No Bags

Liner Punctured? Yes **Layers Of Confinement** 0 **Fill Factor** 65 % **Liner Lid Present** No

Liquids

Liquids Present? No **Comment**

Liquid Between Liner and Drum 0 pints **Other Liquids** 0 pints

Containerized Liquid pints **Total Liquid Amount** 0 pints

Internal Container with Liquid 0 pints

Internal Container with Liquid No

Prohibited Liquids Present No

Containerized Liquid

Contents

Sharp Objects? Yes **Are Sharp Objects Protected?** No

	Value	*Comment*
Prohibited Compressed Gas Present?	No	
Explosives Present?	No	
Pyrophorics Present?	No	
Mercury Present?	No	
PCBs Present?	No	
PCB Mass (lbs)	0	
Wet Cell Batteries Present?	No	
Corrosives,Ignitables or Reactives Present?	No	
Beryllium Contaminates Present?	No	
Hazardous-Only Waste Present?	No	
Is Waste Incompatible with backfill, packaging materials, or shipping container materials?	No	
Sealed Containers Over 4L?	No	

IDC Verification

Is IDC correct? Yes **Recommended IDC** -

IDC Change Reason

Visual Exam Comment The remaining waste by weight percent is Iron Based Metals/Alloys consisting of scrap metal

Batch Id VEB14-00254 **Container Id** 10527919 **Analysis Id** 0000321409

Source Container

Is there a source container? Yes

Source Container ID	Location	IDC
10526884	destroyed @ 676- BXI/9	BN-519

IDC CODES

Current Container IDC Code: BN-508 **Recommended IDC Code:** -

Waste Material Items

Packaging Materials

Material Item	Quantity	Unit	Unit Wt	Item Wt(lbs)

Waste Items by Weight

Material Item	Quantity	Unit	Unit Wt	Item Wt(lbs)

Waste Items by Volume

Material Item	Quantity	Unit	Unit Wt	Item Wt(lbs)
Plastic	15.000	PINTS	0.937	14.060
Debris Sweepings	8.000	PINTS	1.000	8.000

Waste Parameters

Waste Parameter	Remaining Weight %	Actual Weight Lbs
Iron-based Metals/Alloys	100.000	93.060
Aluminum-based Metals/Alloys	0.000	0.000
Other metals	0.000	0.000
Other Inorganic Materials	0.000	8.000
Cellulosics	0.000	0.000
Rubber	0.000	0.000
Plastic (Waste Materials)	0.000	14.060
Inorganic matrix	0.000	0.000
Organic matrix	0.000	0.000
Soils/gravel	0.000	0.000
Steel (packaging materials)	0.000	26.000
Plastic (packaging materials)	0.000	0.000
Cellulosics Packaging	0.000	0.000
MLLW Waste	0.000	0.000

Esignature History

Esig Approval Id	User Id	E-signature Date	Comment
2819370	GMATLOCK	25-AUG-14 09:02:03	
2819371	TCAIN	25-AUG-14 09:02:05	

Batch Id VEB14-00254 **Container Id** 10527940 **Analysis Id** 0000321410

VE Date 25-AUG-14 09:45:36 **Analysis Status** Pass

Gen-IDC Code BN-508 AMWTP Newly Generated Debris **VE Weight** 136.71 lbs.

Closure Date 25-AUG-14 09:45:36 **Procedure Id** INST-FOI-17 **Net Weight** 110.71 lbs.

Container Type 55 **Revision** 27

Operator 1 GUY MATLOCK **Waste Matrix** S5490 **Summary Category Group** S5000

Operator 2 ANTHONY CAIN **Equipment ID** VE BiD RPCK

General

Rigid Liner Present? No **Liner Type** NO LINER **Closure Method** No Bags

Liner Punctured? Yes **Layers Of Confinement** 0 **Fill Factor** 70 % **Liner Lid Present** No

Liquids

Liquids Present? No **Comment**

Liquid Between Liner and Drum 0 pints **Other Liquids** 0 pints

Containerized Liquid pints **Total Liquid Amount** 0 pints

Internal Container with Liquid 0 pints

Internal Container with Liquid No

Prohibited Liquids Present No

Containerized Liquid

Contents

Sharp Objects? Yes **Are Sharp Objects Protected?** No

	Value	*Comment*
Prohibited Compressed Gas Present?	No	
Explosives Present?	No	
Pyrophorics Present?	No	
Mercury Present?	No	
PCBs Present?	No	
PCB Mass (lbs)	0	
Wet Cell Batteries Present?	No	
Corrosives,Ignitables or Reactives Present?	No	
Beryllium Contaminates Present?	No	
Hazardous-Only Waste Present?	No	
Is Waste Incompatible with backfill, packaging materials, or shipping container materials?	No	
Sealed Containers Over 4L?	No	

IDC Verification

Is IDC correct? Yes **Recommended IDC** -

IDC Change Reason

Visual Exam Comment The remaining waste by weight percent is Iron Based Metals/Alloys consisting of scrap metal

Batch Id VEB14-00254 **Container Id** 10527940 **Analysis Id** 0000321410

Source Container

Is there a source container? Yes

Source Container ID	Location	IDC
10526884	destroyed @ 676- BXI/9	BN-519

IDC CODES

Current Container IDC Code: BN-508 **Recommended IDC Code:** -

Waste Material Items

Packaging Materials

Material Item	Quantity	Unit	Unit Wt	Item Wt(lbs)

Waste Items by Weight

Material Item	Quantity	Unit	Unit Wt	Item Wt(lbs)

Waste Items by Volume

Material Item	Quantity	Unit	Unit Wt	Item Wt(lbs)
Rubber	3.000	PINTS	1.554	4.660
Plastic	12.000	PINTS	0.937	11.240
Debris Sweepings	10.000	PINTS	1.000	10.000

Waste Parameters

Waste Parameter	Remaining Weight %	Actual Weight Lbs
Iron-based Metals/Alloys	100.000	84.810
Aluminum-based Metals/Alloys	0.000	0.000
Other metals	0.000	0.000
Other Inorganic Materials	0.000	10.000
Cellulosics	0.000	0.000
Rubber	0.000	4.660
Plastic (Waste Materials)	0.000	11.240
Inorganic matrix	0.000	0.000
Organic matrix	0.000	0.000
Soils/gravel	0.000	0.000
Steel (packaging materials)	0.000	26.000
Plastic (packaging materials)	0.000	0.000
Cellulosics Packaging	0.000	0.000
MLLW Waste	0.000	0.000

Esignature History

Esig Approval Id	User Id	E-signature Date	Comment
2819379	GMATLOCK	25-AUG-14 09:45:36	
2819380	TCAIN	25-AUG-14 09:45:40	

Batch Id VEB14-00254 **Container Id** 10527923 **Analysis Id** 0000321411

VE Date 25-AUG-14 10:16:57 **Analysis Status** Pass

Gen-IDC Code BN-508 AMWTP Newly Generated Debris **VE Weight** 194.04 lbs.

Closure Date 25-AUG-14 10:16:57 **Procedure Id** INST-FOI-17 **Net Weight** 168.04 lbs.

Container Type 55 **Revision** 27

Operator 1 GUY MATLOCK **Waste Matrix** S5490 **Summary Category Group** S5000

Operator 2 ANTHONY CAIN **Equipment ID** VE BiD RPCK

General

Rigid Liner Present? No **Liner Type** NO LINER **Closure Method** No Bags

Liner Punctured? Yes **Layers Of Confinement** 0 **Fill Factor** 65 % **Liner Lid Present** No

Liquids

Liquids Present? No **Comment**

Liquid Between Liner and Drum 0 pints **Other Liquids** 0 pints

Containerized Liquid pints **Total Liquid Amount** 0 pints

Internal Container with Liquid 0 pints

Internal Container with Liquid No

Prohibited Liquids Present No

Containerized Liquid

Contents

Sharp Objects? Yes **Are Sharp Objects Protected?** No

	Value	*Comment*
Prohibited Compressed Gas Present?	No	
Explosives Present?	No	
Pyrophorics Present?	No	
Mercury Present?	No	
PCBs Present?	No	
PCB Mass (lbs)	0	
Wet Cell Batteries Present?	No	
Corrosives,Ignitables or Reactives Present?	No	
Beryllium Contaminates Present?	No	
Hazardous-Only Waste Present?	No	
Is Waste Incompatible with backfill, packaging materials, or shipping container materials?	No	
Sealed Containers Over 4L?	No	

IDC Verification

Is IDC correct? Yes **Recommended IDC** -

IDC Change Reason

Visual Exam Comment The remaining waste by weight percent is Iron Based Metals/Alloys consisting of scrap metal

VE Boxline and Repackaging Report

Batch Id VEB14-00254 **Container Id** 10527923 **Analysis Id** 0000321411

Source Container

Is there a source container? Yes

Source Container ID	Location	IDC
10526884	destroyed @ 676- BXI/9	BN-519

IDC CODES

Current Container IDC Code: BN-508 **Recommended IDC Code:** -

Waste Material Items

Packaging Materials

Material Item	Quantity	Unit	Unit Wt	Item Wt(lbs)

Waste Items by Weight

Material Item	Quantity	Unit	Unit Wt	Item Wt(lbs)

Waste Items by Volume

Material Item	Quantity	Unit	Unit Wt	Item Wt(lbs)
Paper	15.000	PINTS	0.969	14.540
Rubber	3.000	PINTS	1.554	4.660
Plastic	8.000	PINTS	0.937	7.500
Debris Sweepings	12.000	PINTS	1.000	12.000

Waste Parameters

Waste Parameter	Remaining Weight %	Actual Weight Lbs
Iron-based Metals/Alloys	100.000	129.340
Aluminum-based Metals/Alloys	0.000	0.000
Other metals	0.000	0.000
Other Inorganic Materials	0.000	12.000
Cellulosics	0.000	14.540
Rubber	0.000	4.660
Plastic (Waste Materials)	0.000	7.500
Inorganic matrix	0.000	0.000
Organic matrix	0.000	0.000
Soils/gravel	0.000	0.000
Steel (packaging materials)	0.000	26.000
Plastic (packaging materials)	0.000	0.000
Cellulosics Packaging	0.000	0.000
MLLW Waste	0.000	0.000

Esignature History

Esig Approval Id	User Id	E-signature Date	Comment
2819387	GMATLOCK	25-AUG-14 10:16:57	
2819388	TCAIN	25-AUG-14 10:16:59	

Batch Id VEB14-00254 **Container Id** 10527935 **Analysis Id** 0000321414

VE Date 25-AUG-14 10:41:57 **Analysis Status** Pass

Gen-IDC Code BN-508 AMWTP Newly Generated Debris **VE Weight** 130.10 lbs.

Closure Date 25-AUG-14 10:41:57 **Procedure Id** INST-FOI-17 **Net Weight** 104.10 lbs.

Container Type 55 **Revision** 27

Operator 1 GUY MATLOCK **Waste Matrix** S5490 **Summary Category Group** S5000

Operator 2 ANTHONY CAIN **Equipment ID** VE BiD RPCK

General

Rigid Liner Present? No **Liner Type** NO LINER **Closure Method** No Bags

Liner Punctured? Yes **Layers Of Confinement** 0 **Fill Factor** 60 % **Liner Lid Present** No

Liquids

Liquids Present? No **Comment**

Liquid Between Liner and Drum 0 pints **Other Liquids** 0 pints

Containerized Liquid pints **Total Liquid Amount** 0 pints

Internal Container with Liquid 0 pints

Internal Container with Liquid No

Prohibited Liquids Present No

Containerized Liquid

Contents

Sharp Objects? Yes **Are Sharp Objects Protected?** No

	Value	*Comment*
Prohibited Compressed Gas Present?	No	
Explosives Present?	No	
Pyrophorics Present?	No	
Mercury Present?	No	
PCBs Present?	No	
PCB Mass (lbs)	0	
Wet Cell Batteries Present?	No	
Corrosives,Ignitables or Reactives Present?	No	
Beryllium Contaminates Present?	No	
Hazardous-Only Waste Present?	No	
Is Waste Incompatible with backfill, packaging materials, or shipping container materials?	No	
Sealed Containers Over 4L?	No	

IDC Verification

Is IDC correct? Yes **Recommended IDC** -

IDC Change Reason

Visual Exam Comment The remaining waste by weight percent is Iron Based Metals/Alloys consisting of scrap metal

Batch Id VEB14-00254 **Container Id** 10527935 **Analysis Id** 0000321414

Source Container

Is there a source container? Yes

Source Container ID	Location	IDC
10526884	destroyed @ 676- BXI/9	BN-519

IDC CODES

Current Container IDC Code: BN-508 **Recommended IDC Code:** -

Waste Material Items

Packaging Materials

Material Item	Quantity	Unit	Unit Wt	Item Wt(lbs)

Waste Items by Weight

Material Item	Quantity	Unit	Unit Wt	Item Wt(lbs)

Waste Items by Volume

Material Item	Quantity	Unit	Unit Wt	Item Wt(lbs)
Paper	4.000	PINTS	0.969	3.880
Wood	10.000	PINTS	0.702	7.020
Plastic	10.000	PINTS	0.937	9.370
Debris Sweepings	4.000	PINTS	1.000	4.000

Waste Parameters

Waste Parameter	Remaining Weight %	Actual Weight Lbs
Iron-based Metals/Alloys	100.000	79.825
Aluminum-based Metals/Alloys	0.000	0.000
Other metals	0.000	0.000
Other Inorganic Materials	0.000	4.000
Cellulosics	0.000	10.900
Rubber	0.000	0.000
Plastic (Waste Materials)	0.000	9.370
Inorganic matrix	0.000	0.000
Organic matrix	0.000	0.000
Soils/gravel	0.000	0.000
Steel (packaging materials)	0.000	26.000
Plastic (packaging materials)	0.000	0.000
Cellulosics Packaging	0.000	0.000
MLLW Waste	0.000	0.000

Esignature History

Esig Approval Id	User Id	E-signature Date	Comment
2819396	GMATLOCK	25-AUG-14 10:41:57	
2819397	TCAIN	25-AUG-14 10:42:00	

Batch Id VEB14-00254 **Container Id** 10527926 **Analysis Id** 0000321418

VE Date 25-AUG-14 11:03:31 **Analysis Status** Pass

Gen-IDC Code BN-508 AMWTP Newly Generated Debris **VE Weight** 86.00 lbs.

Closure Date 25-AUG-14 11:03:31 **Procedure Id** INST-FOI-17 **Net Weight** 60.00 lbs.

Container Type 55 **Revision** 27

Operator 1 ROBERT PURCELL **Waste Matrix** S5490 **Summary Category Group** S5000

Operator 2 REX BUSH **Equipment ID** VE BiD RPCK

General

Rigid Liner Present? No **Liner Type** NO LINER **Closure Method** No Bags

Liner Punctured? Yes **Layers Of Confinement** 0 **Fill Factor** 55 % **Liner Lid Present** No

Liquids

Liquids Present? No **Comment**

Liquid Between Liner and Drum 0 pints **Other Liquids** 0 pints

Containerized Liquid pints **Total Liquid Amount** 0 pints

Internal Container with Liquid 0 pints

Internal Container with Liquid No

Prohibited Liquids Present No

Containerized Liquid

Contents

Sharp Objects? Yes **Are Sharp Objects Protected?** No

	Value	*Comment*
Prohibited Compressed Gas Present?	No	
Explosives Present?	No	
Pyrophorics Present?	No	
Mercury Present?	No	
PCBs Present?	No	
PCB Mass (lbs)	0	
Wet Cell Batteries Present?	No	
Corrosives,Ignitables or Reactives Present?	No	
Beryllium Contaminates Present?	No	
Hazardous-Only Waste Present?	No	
Is Waste Incompatible with backfill, packaging materials, or shipping container materials?	No	
Sealed Containers Over 4L?	No	

IDC Verification

Is IDC correct? Yes **Recommended IDC** -

IDC Change Reason

Visual Exam Comment The remaining waste by weight percent is Iron Based Metals/Alloys consisting of scrap metal

Batch Id VEB14-00254 **Container Id** 10527926 **Analysis Id** 0000321418

Source Container

Is there a source container? Yes

Source Container ID	Location	IDC
10526884	destroyed @ 676- BXI/9	BN-519

IDC CODES

Current Container IDC Code: BN-508 **Recommended IDC Code:** -

Waste Material Items

Packaging Materials

Material Item	Quantity	Unit	Unit Wt	Item Wt(lbs)

Waste Items by Weight

Material Item	Quantity	Unit	Unit Wt	Item Wt(lbs)

Waste Items by Volume

Material Item	Quantity	Unit	Unit Wt	Item Wt(lbs)
Plastic	2.000	PINTS	0.937	1.870

Waste Parameters

Waste Parameter	Remaining Weight %	Actual Weight Lbs
Iron-based Metals/Alloys	100.000	58.125
Aluminum-based Metals/Alloys	0.000	0.000
Other metals	0.000	0.000
Other Inorganic Materials	0.000	0.000
Cellulosics	0.000	0.000
Rubber	0.000	0.000
Plastic (Waste Materials)	0.000	1.870
Inorganic matrix	0.000	0.000
Organic matrix	0.000	0.000
Soils/gravel	0.000	0.000
Steel (packaging materials)	0.000	26.000
Plastic (packaging materials)	0.000	0.000
Cellulosics Packaging	0.000	0.000
MLLW Waste	0.000	0.000

Esignature History

Esig Approval Id	User Id	E-signature Date	Comment
2819414	RPURCELL	25-AUG-14 11:03:32	
2819416	RBUSHI	25-AUG-14 11:03:33	

Batch Id VEB14-00254 **Container Id** 10527785 **Analysis Id** 0000321419

VE Date 25-AUG-14 11:28:52 **Analysis Status** Pass

Gen-IDC Code BN-508 AMWTP Newly Generated Debris **VE Weight** 94.82 lbs.

Closure Date 25-AUG-14 11:28:52 **Procedure Id** INST-FOI-17 **Net Weight** 68.82 lbs.

Container Type 55 **Revision** 27

Operator 1 ROBERT PURCELL **Waste Matrix** S5490 **Summary Category Group** S5000

Operator 2 REX BUSH **Equipment ID** VE BiD RPCK

General

Rigid Liner Present? No **Liner Type** NO LINER **Closure Method** No Bags

Liner Punctured? Yes **Layers Of Confinement** 0 **Fill Factor** 60 % **Liner Lid Present** No

Liquids

Liquids Present? No **Comment**

Liquid Between Liner and Drum 0 pints **Other Liquids** 0 pints

Containerized Liquid pints **Total Liquid Amount** 0 pints

Internal Container with Liquid 0 pints

Internal Container with Liquid No

Prohibited Liquids Present No

Containerized Liquid

Contents

Sharp Objects? Yes **Are Sharp Objects Protected?** No

	Value	*Comment*
Prohibited Compressed Gas Present?	No	
Explosives Present?	No	
Pyrophorics Present?	No	
Mercury Present?	No	
PCBs Present?	No	
PCB Mass (lbs)	0	
Wet Cell Batteries Present?	No	
Corrosives,Ignitables or Reactives Present?	No	
Beryllium Contaminates Present?	No	
Hazardous-Only Waste Present?	No	
Is Waste Incompatible with backfill, packaging materials, or shipping container materials?	No	
Sealed Containers Over 4L?	No	

IDC Verification

Is IDC correct? Yes **Recommended IDC** -

IDC Change Reason

Visual Exam Comment The remaining waste by weight percent is Iron Based Metals/Alloys consisting of scrap metal.

Batch Id VEB14-00254 **Container Id** 10527785 **Analysis Id** 0000321419

Source Container

Is there a source container? Yes

Source Container ID	Location	IDC
10526884	destroyed @ 676- BXI/9	BN-519

IDC CODES

Current Container IDC Code: BN-508 **Recommended IDC Code:** -

Waste Material Items

Packaging Materials

Material Item	Quantity	Unit	Unit Wt	Item Wt(lbs)

Waste Items by Weight

Material Item	Quantity	Unit	Unit Wt	Item Wt(lbs)

Waste Items by Volume

Material Item	Quantity	Unit	Unit Wt	Item Wt(lbs)
Wood	2.000	PINTS	0.702	1.400
Plastic	3.000	PINTS	0.937	2.810

Waste Parameters

Waste Parameter	Remaining Weight %	Actual Weight Lbs
Iron-based Metals/Alloys	100.000	64.605
Aluminum-based Metals/Alloys	0.000	0.000
Other metals	0.000	0.000
Other Inorganic Materials	0.000	0.000
Cellulosics	0.000	1.400
Rubber	0.000	0.000
Plastic (Waste Materials)	0.000	2.810
Inorganic matrix	0.000	0.000
Organic matrix	0.000	0.000
Soils/gravel	0.000	0.000
Steel (packaging materials)	0.000	26.000
Plastic (packaging materials)	0.000	0.000
Cellulosics Packaging	0.000	0.000
MLLW Waste	0.000	0.000

Esignature History

Esig Approval Id	User Id	E-signature Date	Comment
2819455	RPURCELL	25-AUG-14 11:28:52	
2819456	RBUSH1	25-AUG-14 11:28:55	

Batch Id VEB14-00254 **Container Id** 10527922 **Analysis Id** 0000321420

VE Date 25-AUG-14 12:40:33 **Analysis Status** Pass

Gen-IDC Code BN-508 AMWTP Newly Generated Debris **VE Weight** 123.48 lbs.

Closure Date 25-AUG-14 12:40:33 **Procedure Id** INST-FOI-17 **Net Weight** 97.48 lbs.

Container Type 55 **Revision** 27

Operator 1 ROBERT PURCELL **Waste Matrix** S5490 **Summary Category Group** S5000

Operator 2 REX BUSH **Equipment ID** VE BiD RPCK

General

Rigid Liner Present? No **Liner Type** NO LINER **Closure Method** No Bags

Liner Punctured? Yes **Layers Of Confinement** 0 **Fill Factor** 68 % **Liner Lid Present** No

Liquids

Liquids Present? No **Comment**

Liquid Between Liner and Drum 0 pints **Other Liquids** 0 pints

Containerized Liquid pints **Total Liquid Amount** 0 pints

Internal Container with Liquid 0 pints

Internal Container with Liquid No

Prohibited Liquids Present No

Containerized Liquid

Contents

Sharp Objects? Yes **Are Sharp Objects Protected?** No

	Value	*Comment*
Prohibited Compressed Gas Present?	No	
Explosives Present?	No	
Pyrophorics Present?	No	
Mercury Present?	No	
PCBs Present?	No	
PCB Mass (lbs)	0	
Wet Cell Batteries Present?	No	
Corrosives,Ignitables or Reactives Present?	No	
Beryllium Contaminates Present?	No	
Hazardous-Only Waste Present?	No	
Is Waste Incompatible with backfill, packaging materials, or shipping container materials?	No	
Sealed Containers Over 4L?	No	

IDC Verification

Is IDC correct? Yes **Recommended IDC** -

IDC Change Reason

Visual Exam Comment The remaining waste by weight percent is Iron Based Metals/Alloys consisting of scrap metal.

VE Boxline and Repackaging Report

Batch Id VEB14-00254 **Container Id** 10527922 **Analysis Id** 0000321420

Source Container

Is there a source container? Yes

Source Container ID	Location	IDC
10526884	destroyed @ 676- BXI/9	BN-519

IDC CODES

Current Container IDC Code: BN-508 **Recommended IDC Code:** -

Waste Material Items

Packaging Materials

Material Item	Quantity	Unit	Unit Wt	Item Wt(lbs)

Waste Items by Weight

Material Item	Quantity	Unit	Unit Wt	Item Wt(lbs)

Waste Items by Volume

Material Item	Quantity	Unit	Unit Wt	Item Wt(lbs)
Wood	4.000	PINTS	0.702	2.810
Plastic	2.000	PINTS	0.937	1.870

Waste Parameters

Waste Parameter	Remaining Weight %	Actual Weight Lbs
Iron-based Metals/Alloys	100.000	92.800
Aluminum-based Metals/Alloys	0.000	0.000
Other metals	0.000	0.000
Other Inorganic Materials	0.000	0.000
Cellulosics	0.000	2.810
Rubber	0.000	0.000
Plastic (Waste Materials)	0.000	1.870
Inorganic matrix	0.000	0.000
Organic matrix	0.000	0.000
Soils/gravel	0.000	0.000
Steel (packaging materials)	0.000	26.000
Plastic (packaging materials)	0.000	0.000
Cellulosics Packaging	0.000	0.000
MLLW Waste	0.000	0.000

Esignature History

Esig Approval Id	User Id	E-signature Date	Comment
2819495	RPURCELL	25-AUG-14 12:40:33	
2819496	RBUSH1	25-AUG-14 12:40:36	

Batch Id VEB14-00254 **Container Id** 10527933 **Analysis Id** 0000321421

VE Date 25-AUG-14 13:03:00 **Analysis Status** Pass

Gen-IDC Code BN-508 AMWTP Newly Generated Debris **VE Weight** 123.48 lbs.

Closure Date 25-AUG-14 13:03:00 **Procedure Id** INST-FOI-17 **Net Weight** 97.48 lbs.

Container Type 55 **Revision** 27

Operator 1 ROBERT PURCELL **Waste Matrix** S5490 **Summary Category Group** S5000

Operator 2 REX BUSH **Equipment ID** VE BiD RPCK

General

Rigid Liner Present? No **Liner Type** NO LINER **Closure Method** No Bags

Liner Punctured? Yes **Layers Of Confinement** 0 **Fill Factor** 60 % **Liner Lid Present** No

Liquids

Liquids Present? No **Comment**

Liquid Between Liner and Drum 0 pints **Other Liquids** 0 pints

Containerized Liquid pints **Total Liquid Amount** 0 pints

Internal Container with Liquid 0 pints

Internal Container with Liquid No

Prohibited Liquids Present No

Containerized Liquid

Contents

Sharp Objects? Yes **Are Sharp Objects Protected?** No

	Value	*Comment*
Prohibited Compressed Gas Present?	No	
Explosives Present?	No	
Pyrophorics Present?	No	
Mercury Present?	No	
PCBs Present?	No	
PCB Mass (lbs)	0	
Wet Cell Batteries Present?	No	
Corrosives,Ignitables or Reactives Present?	No	
Beryllium Contaminates Present?	No	
Hazardous-Only Waste Present?	No	
Is Waste Incompatible with backfill, packaging materials, or shipping container materials?	No	
Sealed Containers Over 4L?	No	

IDC Verification

Is IDC correct? Yes **Recommended IDC** -

IDC Change Reason

Visual Exam Comment The remaining waste by weight percent is Iron Based Metals/Alloys consisting of scrap metal.

VE Boxline and Repackaging Report

Batch Id VEB14-00254 **Container Id** 10527933 **Analysis Id** 0000321421

Source Container

Is there a source container? Yes

Source Container ID	Location	IDC
10526884	destroyed @ 676- BXI/9	BN-519

IDC CODES

Current Container IDC Code: BN-508 **Recommended IDC Code:** -

Waste Material Items

Packaging Materials

Material Item	Quantity	Unit	Unit Wt	Item Wt(lbs)

Waste Items by Weight

Material Item	Quantity	Unit	Unit Wt	Item Wt(lbs)

Waste Items by Volume

Material Item	Quantity	Unit	Unit Wt	Item Wt(lbs)
Wood	2.000	PINTS	0.702	1.400
Plastic	1.000	PINTS	0.937	0.940

Waste Parameters

Waste Parameter	Remaining Weight %	Actual Weight Lbs
Iron-based Metals/Alloys	100.000	95.140
Aluminum-based Metals/Alloys	0.000	0.000
Other metals	0.000	0.000
Other Inorganic Materials	0.000	0.000
Cellulosics	0.000	1.400
Rubber	0.000	0.000
Plastic (Waste Materials)	0.000	0.940
Inorganic matrix	0.000	0.000
Organic matrix	0.000	0.000
Soils/gravel	0.000	0.000
Steel (packaging materials)	0.000	26.000
Plastic (packaging materials)	0.000	0.000
Cellulosics Packaging	0.000	0.000
MLLW Waste	0.000	0.000

Esignature History

Esig Approval Id	User Id	E-signature Date	Comment
2819505	RPURCELL	25-AUG-14 13:03:01	
2819506	RBUSH1	25-AUG-14 13:03:03	

Batch Id VEB14-00254 **Container Id** 10527927 **Analysis Id** 0000321422

VE Date 25-AUG-14 13:24:22 **Analysis Status** Pass

Gen-IDC Code BN-508 AMWTP Newly Generated Debris **VE Weight** 99.23 lbs.

Closure Date 25-AUG-14 13:24:22 **Procedure Id** INST-FOI-17 **Net Weight** 73.23 lbs.

Container Type 55 **Revision** 27

Operator 1 ROBERT PURCELL **Waste Matrix** S5490 **Summary Category Group** S5000

Operator 2 REX BUSH **Equipment ID** VE BiD RPCK

General

Rigid Liner Present? No **Liner Type** NO LINER **Closure Method** No Bags

Liner Punctured? Yes **Layers Of Confinement** 0 **Fill Factor** 60 % **Liner Lid Present** No

Liquids

Liquids Present? No **Comment**

Liquid Between Liner and Drum 0 pints **Other Liquids** 0 pints

Containerized Liquid pints **Total Liquid Amount** 0 pints

Internal Container with Liquid 0 pints

Internal Container with Liquid No

Prohibited Liquids Present No

Containerized Liquid

Contents

Sharp Objects? Yes **Are Sharp Objects Protected?** No

	Value	*Comment*
Prohibited Compressed Gas Present?	No	
Explosives Present?	No	
Pyrophorics Present?	No	
Mercury Present?	No	
PCBs Present?	No	
PCB Mass (lbs)	0	
Wet Cell Batteries Present?	No	
Corrosives,Ignitables or Reactives Present?	No	
Beryllium Contaminates Present?	No	
Hazardous-Only Waste Present?	No	
Is Waste Incompatible with backfill, packaging materials, or shipping container materials?	No	
Sealed Containers Over 4L?	No	

IDC Verification

Is IDC correct? Yes **Recommended IDC** -

IDC Change Reason

Visual Exam Comment The remaining waste by weight percent is Iron Based Metals/Alloys consisting of scrap metal.

Batch Id VEB14-00254 **Container Id** 10527927 **Analysis Id** 0000321422

Source Container

Is there a source container? Yes

Source Container ID	Location	IDC
10526884	destroyed @ 676- BXI/9	BN-519

IDC CODES

Current Container IDC Code: BN-508 **Recommended IDC Code:** -

Waste Material Items

Packaging Materials

Material Item	Quantity	Unit	Unit Wt	Item Wt(lbs)

Waste Items by Weight

Material Item	Quantity	Unit	Unit Wt	Item Wt(lbs)

Waste Items by Volume

Material Item	Quantity	Unit	Unit Wt	Item Wt(lbs)
Paper	1.000	PINTS	0.969	0.970
Wood	1.000	PINTS	0.702	0.700
Plastic	1.000	PINTS	0.937	0.940

Waste Parameters

Waste Parameter	Remaining Weight %	Actual Weight Lbs
Iron-based Metals/Alloys	100.000	70.615
Aluminum-based Metals/Alloys	0.000	0.000
Other metals	0.000	0.000
Other Inorganic Materials	0.000	0.000
Cellulosics	0.000	1.670
Rubber	0.000	0.000
Plastic (Waste Materials)	0.000	0.940
Inorganic matrix	0.000	0.000
Organic matrix	0.000	0.000
Soils/gravel	0.000	0.000
Steel (packaging materials)	0.000	26.000
Plastic (packaging materials)	0.000	0.000
Cellulosics Packaging	0.000	0.000
MLLW Waste	0.000	0.000

Esignature History

Esig Approval Id	User Id	E-signature Date	Comment
2819523	RPURCELL	25-AUG-14 13:24:23	
2819524	RBUSH1	25-AUG-14 13:24:25	

Batch Id VEB14-00254 **Container Id** 10527782 **Analysis Id** 0000321427

VE Date 25-AUG-14 14:06:39 **Analysis Status** Pass

Gen-IDC Code BN-508 AMWTP Newly Generated Debris **VE Weight** 132.30 **lbs.**

Closure Date 25-AUG-14 14:06:39 **Procedure Id** INST-FOI-17 **Net Weight** 106.30 **lbs.**

Container Type 55 **Revision** 27

Operator 1 ROBERT PURCELL **Waste Matrix** S5490 **Summary Category Group** S5000

Operator 2 REX BUSH **Equipment ID** VE BiD RPCK

General

Rigid Liner Present? No **Liner Type** NO LINER **Closure Method** No Bags

Liner Punctured? Yes **Layers Of Confinement** 0 **Fill Factor** 75 % **Liner Lid Present** No

Liquids

Liquids Present? No **Comment**

Liquid Between Liner and Drum 0 pints **Other Liquids** 0 pints

Containerized Liquid pints **Total Liquid Amount** 0 pints

Internal Container with Liquid 0 pints

Internal Container with Liquid No

Prohibited Liquids Present No

Containerized Liquid

Contents

Sharp Objects? Yes **Are Sharp Objects Protected?** No

	Value	*Comment*
Prohibited Compressed Gas Present?	No	
Explosives Present?	No	
Pyrophorics Present?	No	
Mercury Present?	No	
PCBs Present?	No	
PCB Mass (lbs)	0	
Wet Cell Batteries Present?	No	
Corrosives,Ignitables or Reactives Present?	No	
Beryllium Contaminates Present?	No	
Hazardous-Only Waste Present?	No	
Is Waste Incompatible with backfill, packaging materials, or shipping container materials?	No	
Sealed Containers Over 4L?	No	

IDC Verification

Is IDC correct? Yes **Recommended IDC** -

IDC Change Reason

Visual Exam Comment The remaining waste by weight percent is Cellulosics consisting of wood debris and cardboard.

Batch Id VEB14-00254 **Container Id** 10527782 **Analysis Id** 0000321427

Source Container

Is there a source container? Yes

Source Container ID	Location	IDC
10526884	destroyed @ 676- BXI/9	BN-519

IDC CODES

Current Container IDC Code: BN-508 **Recommended IDC Code:** -

Waste Material Items

Packaging Materials

Material Item	Quantity	Unit	Unit Wt	Item Wt(lbs)

Waste Items by Weight

Material Item	Quantity	Unit	Unit Wt	Item Wt(lbs)

Waste Items by Volume

Material Item	Quantity	Unit	Unit Wt	Item Wt(lbs)
Oil-Dri (Inside 55 gal drum)	6.000	PINTS	0.420	2.520
Iron	1.000	PINTS	7.807	7.810
Plastic	1.000	PINTS	0.937	0.940

Waste Parameters

Waste Parameter	Remaining Weight %	Actual Weight Lbs
Iron-based Metals/Alloys	0.000	7.810
Aluminum-based Metals/Alloys	0.000	0.000
Other metals	0.000	0.000
Other Inorganic Materials	0.000	2.520
Cellulosics	100.000	95.030
Rubber	0.000	0.000
Plastic (Waste Materials)	0.000	0.940
Inorganic matrix	0.000	0.000
Organic matrix	0.000	0.000
Soils/gravel	0.000	0.000
Steel (packaging materials)	0.000	26.000
Plastic (packaging materials)	0.000	0.000
Cellulosics Packaging	0.000	0.000
MLLW Waste	0.000	0.000

Esignature History

Esig Approval Id	User Id	E-signature Date	Comment
2819553	RPURCELL	25-AUG-14 14:06:40	
2819554	RBUSH1	25-AUG-14 14:06:42	

Batch Id VEB14-00254 **Container Id** 10527918 **Analysis Id** 0000321429

VE Date 25-AUG-14 14:53:52 **Analysis Status** Pass

Gen-IDC Code BN-508 AMWTP Newly Generated Debris **VE Weight** 105.84 **lbs.**

Closure Date 25-AUG-14 14:53:52 **Procedure Id** INST-FOI-17 **Net Weight** 79.84 **lbs.**

Container Type 55 **Revision** 27

Operator 1 GUY MATLOCK **Waste Matrix** S5490 **Summary Category Group** S5000

Operator 2 REX BUSH **Equipment ID** VE BiD RPCK

General

Rigid Liner Present? No **Liner Type** NO LINER **Closure Method** No Bags

Liner Punctured? Yes **Layers Of Confinement** 0 **Fill Factor** 65 % **Liner Lid Present** No

Liquids

Liquids Present? No **Comment**

Liquid Between Liner and Drum 0 pints **Other Liquids** 0 pints

Containerized Liquid pints **Total Liquid Amount** 0 pints

Internal Container with Liquid 0 pints

Internal Container with Liquid No

Prohibited Liquids Present No

Containerized Liquid

Contents

Sharp Objects? Yes **Are Sharp Objects Protected?** No

	Value	*Comment*
Prohibited Compressed Gas Present?	No	
Explosives Present?	No	
Pyrophorics Present?	No	
Mercury Present?	No	
PCBs Present?	No	
PCB Mass (lbs)	0	
Wet Cell Batteries Present?	No	
Corrosives,Ignitables or Reactives Present?	No	
Beryllium Contaminates Present?	No	
Hazardous-Only Waste Present?	No	
Is Waste Incompatible with backfill, packaging materials, or shipping container materials?	No	
Sealed Containers Over 4L?	No	

IDC Verification

Is IDC correct? Yes **Recommended IDC** -

IDC Change Reason

Visual Exam Comment The remaining waste by weight percent is Cellulosics consisting of wood debris

Batch Id VEB14-00254 **Container Id** 10527918 **Analysis Id** 0000321429

Source Container

Is there a source container? Yes

Source Container ID	Location	IDC
10526884	destroyed @ 676- BXI/9	BN-519

IDC CODES

Current Container IDC Code: BN-508 **Recommended IDC Code:** -

Waste Material Items

Packaging Materials

Material Item	Quantity	Unit	Unit Wt	Item Wt(lbs)

Waste Items by Weight

Material Item	Quantity	Unit	Unit Wt	Item Wt(lbs)

Waste Items by Volume

Material Item	Quantity	Unit	Unit Wt	Item Wt(lbs)
Iron	1.000	PINTS	7.807	7.810
Plastic	1.000	PINTS	0.937	0.940
Debris Sweepings	8.000	PINTS	1.000	8.000

Waste Parameters

Waste Parameter	Remaining Weight %	Actual Weight Lbs
Iron-based Metals/Alloys	0.000	7.810
Aluminum-based Metals/Alloys	0.000	0.000
Other metals	0.000	0.000
Other Inorganic Materials	0.000	8.000
Cellulosics	100.000	63.090
Rubber	0.000	0.000
Plastic (Waste Materials)	0.000	0.940
Inorganic matrix	0.000	0.000
Organic matrix	0.000	0.000
Soils/gravel	0.000	0.000
Steel (packaging materials)	0.000	26.000
Plastic (packaging materials)	0.000	0.000
Cellulosics Packaging	0.000	0.000
MLLW Waste	0.000	0.000

Esignature History

Esig Approval Id	User Id	E-signature Date	Comment
2819594	GMATLOCK	25-AUG-14 14:53:53	
2819595	RBUSH1	25-AUG-14 14:53:56	

Batch Id VEB14-00254 **Container Id** 10527956 **Analysis Id** 0000321433

VE Date 25-AUG-14 15:23:20 **Analysis Status** Pass

Gen-IDC Code BN-508 AMWTP Newly Generated Debris **VE Weight** 125.69 lbs.

Closure Date 25-AUG-14 15:23:20 **Procedure Id** INST-FOI-17 **Net Weight** 99.69 lbs.

Container Type 55 **Revision** 27

Operator 1 GUY MATLOCK **Waste Matrix** S5490 **Summary Category Group** S5000

Operator 2 ROBERT PURCELL **Equipment ID** VE BiD RPCK

General

Rigid Liner Present? No **Liner Type** NO LINER **Closure Method** No Bags

Liner Punctured? Yes **Layers Of Confinement** 0 **Fill Factor** 65 % **Liner Lid Present** No

Liquids

Liquids Present? No **Comment**

Liquid Between Liner and Drum 0 pints **Other Liquids** 0 pints

Containerized Liquid pints **Total Liquid Amount** 0 pints

Internal Container with Liquid 0 pints

Internal Container with Liquid No

Prohibited Liquids Present No

Containerized Liquid

Contents

Sharp Objects? Yes **Are Sharp Objects Protected?** No

	Value	*Comment*
Prohibited Compressed Gas Present?	No	
Explosives Present?	No	
Pyrophorics Present?	No	
Mercury Present?	No	
PCBs Present?	No	
PCB Mass (lbs)	0	
Wet Cell Batteries Present?	No	
Corrosives,Ignitables or Reactives Present?	No	
Beryllium Contaminates Present?	No	
Hazardous-Only Waste Present?	No	
Is Waste Incompatible with backfill, packaging materials, or shipping container materials?	No	
Sealed Containers Over 4L?	No	

IDC Verification

Is IDC correct? Yes **Recommended IDC** -

IDC Change Reason

Visual Exam Comment The remaining waste by weight percent is Iron Based Metals/Alloys consisting of scrap metal

Batch Id VEB14-00254 **Container Id** 10527956 **Analysis Id** 0000321433

Source Container

Is there a source container? Yes

Source Container ID	Location	IDC
10526884	destroyed @ 676- BXI/9	BN-519

IDC CODES

Current Container IDC Code: BN-508 **Recommended IDC Code:** -

Waste Material Items

Packaging Materials

Material Item	Quantity	Unit	Unit Wt	Item Wt(lbs)

Waste Items by Weight

Material Item	Quantity	Unit	Unit Wt	Item Wt(lbs)

Waste Items by Volume

Material Item	Quantity	Unit	Unit Wt	Item Wt(lbs)
Paper	2.000	PINTS	0.969	1.940
Plastic	3.000	PINTS	0.937	2.810
Cloth Material	3.000	PINTS	2.000	6.000
Debris Sweepings	3.000	PINTS	1.000	3.000

Waste Parameters

Waste Parameter	Remaining Weight %	Actual Weight Lbs
Iron-based Metals/Alloys	100.000	85.935
Aluminum-based Metals/Alloys	0.000	0.000
Other metals	0.000	0.000
Other Inorganic Materials	0.000	3.000
Cellulosics	0.000	7.940
Rubber	0.000	0.000
Plastic (Waste Materials)	0.000	2.810
Inorganic matrix	0.000	0.000
Organic matrix	0.000	0.000
Soils/gravel	0.000	0.000
Steel (packaging materials)	0.000	26.000
Plastic (packaging materials)	0.000	0.000
Cellulosics Packaging	0.000	0.000
MLLW Waste	0.000	0.000

Esignature History

Esig Approval Id	User Id	E-signature Date	Comment
2819629	GMATLOCK	25-AUG-14 15:23:20	
2819631	RPURCELL	25-AUG-14 15:23:22	

Batch Id VEB14-00254 **Container Id** 10527925 **Analysis Id** 0000321434

VE Date 25-AUG-14 16:13:02 **Analysis Status** Pass

Gen-IDC Code BN-508 AMWTP Newly Generated Debris **VE Weight** 134.51 lbs.

Closure Date 25-AUG-14 16:13:02 **Procedure Id** INST-FOI-17 **Net Weight** 108.51 lbs.

Container Type 55 **Revision** 27

Operator 1 GUY MATLOCK **Waste Matrix** S5490 **Summary Category Group** S5000

Operator 2 ROBERT PURCELL **Equipment ID** VE BiD RPCK

General

Rigid Liner Present? No **Liner Type** NO LINER **Closure Method** No Bags

Liner Punctured? Yes **Layers Of Confinement** 0 **Fill Factor** 60 % **Liner Lid Present** No

Liquids

Liquids Present? No **Comment**

Liquid Between Liner and Drum 0 pints **Other Liquids** 0 pints

Containerized Liquid pints **Total Liquid Amount** 0 pints

Internal Container with Liquid 0 pints

Internal Container with Liquid No

Prohibited Liquids Present No

Containerized Liquid

Contents

Sharp Objects? Yes **Are Sharp Objects Protected?** No

	Value	*Comment*
Prohibited Compressed Gas Present?	No	
Explosives Present?	No	
Pyrophorics Present?	No	
Mercury Present?	No	
PCBs Present?	No	
PCB Mass (lbs)	0	
Wet Cell Batteries Present?	No	
Corrosives,Ignitables or Reactives Present?	No	
Beryllium Contaminates Present?	No	
Hazardous-Only Waste Present?	No	
Is Waste Incompatible with backfill, packaging materials, or shipping container materials?	No	
Sealed Containers Over 4L?	No	

IDC Verification

Is IDC correct? Yes **Recommended IDC** -

IDC Change Reason

Visual Exam Comment The remaining waste by weight percent is Iron Based Metals/Alloys consisting of scrap metal

Batch Id VEB14-00254 **Container Id** 10527925 **Analysis Id** 0000321434

Source Container

Is there a source container? Yes

Source Container ID	Location	IDC
10526884	destroyed @ 676- BXI/9	BN-519

IDC CODES

Current Container IDC Code: BN-508 **Recommended IDC Code:** -

Waste Material Items

Packaging Materials

Material Item	Quantity	Unit	Unit Wt	Item Wt(lbs)

Waste Items by Weight

Material Item	Quantity	Unit	Unit Wt	Item Wt(lbs)

Waste Items by Volume

Material Item	Quantity	Unit	Unit Wt	Item Wt(lbs)
Paper	9.000	PINTS	0.969	8.720
Rubber	4.000	PINTS	1.554	6.220
Cardboard	2.000	PINTS	0.833	1.670
Plastic	5.000	PINTS	0.937	4.690
Debris Sweepings	6.000	PINTS	1.000	6.000

Waste Parameters

Waste Parameter	Remaining Weight %	Actual Weight Lbs
Iron-based Metals/Alloys	100.000	81.205
Aluminum-based Metals/Alloys	0.000	0.000
Other metals	0.000	0.000
Other Inorganic Materials	0.000	6.000
Cellulosics	0.000	10.390
Rubber	0.000	6.220
Plastic (Waste Materials)	0.000	4.690
Inorganic matrix	0.000	0.000
Organic matrix	0.000	0.000
Soils/gravel	0.000	0.000
Steel (packaging materials)	0.000	26.000
Plastic (packaging materials)	0.000	0.000
Cellulosics Packaging	0.000	0.000
MLLW Waste	0.000	0.000

Esignature History

Esig Approval Id	User Id	E-signature Date	Comment
2819681	GMATLOCK	25-AUG-14 16:13:02	
2819682	RPURCELL	25-AUG-14 16:13:04	

Batch Id VEB14-00254 **Container Id** 10527943 **Analysis Id** 0000321440

VE Date 25-AUG-14 16:48:17 **Analysis Status** Pass

Gen-IDC Code BN-508 AMWTP Newly Generated Debris **VE Weight** 116.87 lbs.

Closure Date 25-AUG-14 16:48:17 **Procedure Id** INST-FOI-17 **Net Weight** 90.87 lbs.

Container Type 55 **Revision** 27

Operator 1 GUY MATLOCK **Waste Matrix** S5490 **Summary Category Group** S5000

Operator 2 ROBERT PURCELL **Equipment ID** VE BiD RPCK

General

Rigid Liner Present? No **Liner Type** NO LINER **Closure Method** No Bags

Liner Punctured? Yes **Layers Of Confinement** 0 **Fill Factor** 55 % **Liner Lid Present** No

Liquids

Liquids Present? No **Comment**

Liquid Between Liner and Drum 0 pints **Other Liquids** 0 pints

Containerized Liquid pints **Total Liquid Amount** 0 pints

Internal Container with Liquid 0 pints

Internal Container with Liquid No

Prohibited Liquids Present No

Containerized Liquid

Contents

Sharp Objects? Yes **Are Sharp Objects Protected?** No

	Value	*Comment*
Prohibited Compressed Gas Present?	No	
Explosives Present?	No	
Pyrophorics Present?	No	
Mercury Present?	No	
PCBs Present?	No	
PCB Mass (lbs)	0	
Wet Cell Batteries Present?	No	
Corrosives,Ignitables or Reactives Present?	No	
Beryllium Contaminates Present?	No	
Hazardous-Only Waste Present?	No	
Is Waste Incompatible with backfill, packaging materials, or shipping container materials?	No	
Sealed Containers Over 4L?	No	

IDC Verification

Is IDC correct? Yes **Recommended IDC** -

IDC Change Reason

Visual Exam Comment The remaining waste by weight percent is Rubber/ Cellulosics consisting of rubber gloves, paper and cardboard

VE Boxline and Repackaging Report

Batch Id VEB14-00254 **Container Id** 10527943 **Analysis Id** 0000321440

Source Container

Is there a source container? Yes

Source Container ID	Location	IDC
10526884	destroyed @ 676- BXI/9	BN-519

IDC CODES

Current Container IDC Code: BN-508 **Recommended IDC Code:** -

Waste Material Items

Packaging Materials

Material Item	Quantity	Unit	Unit Wt	Item Wt(lbs)

Waste Items by Weight

Material Item	Quantity	Unit	Unit Wt	Item Wt(lbs)

Waste Items by Volume

Material Item	Quantity	Unit	Unit Wt	Item Wt(lbs)
Iron	1.000	PINTS	7.807	7.810
Plastic	7.000	PINTS	0.937	6.560
Debris Sweepings	3.000	PINTS	1.000	3.000

Waste Parameters

Waste Parameter	Remaining Weight %	Actual Weight Lbs
Iron-based Metals/Alloys	0.000	7.810
Aluminum-based Metals/Alloys	0.000	0.000
Other metals	0.000	0.000
Other Inorganic Materials	0.000	3.000
Cellulosics	40.000	29.398
Rubber	60.000	44.097
Plastic (Waste Materials)	0.000	6.560
Inorganic matrix	0.000	0.000
Organic matrix	0.000	0.000
Soils/gravel	0.000	0.000
Steel (packaging materials)	0.000	26.000
Plastic (packaging materials)	0.000	0.000
Cellulosics Packaging	0.000	0.000
MLLW Waste	0.000	0.000

Esignature History

Esig Approval Id	User Id	E-signature Date	Comment
2819711	GMATLOCK	25-AUG-14 16:48:17	
2819712	RPURCELL	25-AUG-14 16:48:19	

Batch Id VEB14-00254 **Container Id** 10527946 **Analysis Id** 0000321443

VE Date 25-AUG-14 21:55:15 **Analysis Status** Pass

Gen-IDC Code BN-508 AMWTP Newly Generated Debris **VE Weight** 86.00 lbs.

Closure Date 25-AUG-14 21:55:15 **Procedure Id** INST-FOI-17 **Net Weight** 60.00 lbs.

Container Type 55 **Revision** 27

Operator 1 HOWARD SHELL **Waste Matrix** S5490 **Summary Category Group** S5000

Operator 2 JEFFREY K BAILEY **Equipment ID** VE BiD RPCK

General

Rigid Liner Present? No **Liner Type** NO LINER **Closure Method** No Bags

Liner Punctured? Yes **Layers Of Confinement** 0 **Fill Factor** 70 % **Liner Lid Present** No

Liquids

Liquids Present? No **Comment**

Liquid Between Liner and Drum 0 pints **Other Liquids** 0 pints

Containerized Liquid pints **Total Liquid Amount** 0 pints

Internal Container with Liquid 0 pints

Internal Container with Liquid No

Prohibited Liquids Present No

Containerized Liquid

Contents

Sharp Objects? Yes **Are Sharp Objects Protected?** No

	Value	*Comment*
Prohibited Compressed Gas Present?	No	
Explosives Present?	No	
Pyrophorics Present?	No	
Mercury Present?	No	
PCBs Present?	No	
PCB Mass (lbs)	0	
Wet Cell Batteries Present?	No	
Corrosives,Ignitables or Reactives Present?	No	
Beryllium Contaminates Present?	No	
Hazardous-Only Waste Present?	No	
Is Waste Incompatible with backfill, packaging materials, or shipping container materials?	No	
Sealed Containers Over 4L?	No	

IDC Verification

Is IDC correct? Yes **Recommended IDC** -

IDC Change Reason

Visual Exam Comment The remaining waste by weight percent is Iron Based Metal Alloy consisting of scrap metal.

Batch Id VEB14-00254 **Container Id** 10527946 **Analysis Id** 0000321443

Source Container

Is there a source container? Yes

Source Container ID	Location	IDC
10526884	destroyed @ 676- BXI/9	BN-519

IDC CODES

Current Container IDC Code: BN-508 **Recommended IDC Code:** -

Waste Material Items

Packaging Materials

Material Item	Quantity	Unit	Unit Wt	Item Wt(lbs)

Waste Items by Weight

Material Item	Quantity	Unit	Unit Wt	Item Wt(lbs)

Waste Items by Volume

Material Item	Quantity	Unit	Unit Wt	Item Wt(lbs)
Rubber	1.000	PINTS	1.554	1.550
Cardboard	1.000	PINTS	0.833	0.830
Plastic	3.000	PINTS	0.937	2.810

Waste Parameters

Waste Parameter	Remaining Weight %	Actual Weight Lbs
Iron-based Metals/Alloys	100.000	54.805
Aluminum-based Metals/Alloys	0.000	0.000
Other metals	0.000	0.000
Other Inorganic Materials	0.000	0.000
Cellulosics	0.000	0.830
Rubber	0.000	1.550
Plastic (Waste Materials)	0.000	2.810
Inorganic matrix	0.000	0.000
Organic matrix	0.000	0.000
Soils/gravel	0.000	0.000
Steel (packaging materials)	0.000	26.000
Plastic (packaging materials)	0.000	0.000
Cellulosics Packaging	0.000	0.000
MLLW Waste	0.000	0.000

Esignature History

Esig Approval Id	User Id	E-signature Date	Comment
2819757	HSHELL	25-AUG-14 21:55:15	
2819758	JBAILEY	25-AUG-14 21:55:17	

*****End of VE Boxline Report*****

AMWTP
Advanced Mixed Waste Treatment Project

AMWTP

Checklist Report

Date: 26-Sep-2014

Time: 15:32

Batch Id VEB14-00254 **Open Date** 25-AUG-14 **Close Date** 25-AUG-14

Reviewer RONALD GRISE **Approval Level** Independent Technical Reviewer

Approval Date 26-AUG-14 **Review Iteration** 1

Question Text	Answer	Requirement	Comment
1. Is the QA documentation for the Batch Data Reports complete and includes data reports and QC results? o VE Batch Coversheet o Table of Contents (manual review only) o VE Analysis Reports o Analytical Balance Calibration Check Sheet (Form-1215), if applicable (manual review only) o ITR Checklist (Form-1415, manual review only) o Batch Data Report Supplemental Comment Form (Form-1491, manual review only) o Associated NCRs (referenced in WTS) o Audio/Video Recording References, if applicable	Yes		
2. Are there 20 containers or less in the batch?	Yes		
3. Was each VE Operator qualified at the time of the VE event?	Yes		
4. Was a VE data form completed for each container in the batch?	Yes		
Was the data generated in a technically correct manner using the correct revision of INST-OI-34, Non-facility Visual Examination or INST-FOI-17, Facility Visual Examination Operations, as applicable.	Yes		
6. Was the correct revision of the procedure documented on each analysis report?	Yes		
7. Was the E-signature History review performed?	Yes		
8. Was guidance from VEE documented, as applicable?	N/A		
9. Does every drum reported in the batch have a valid audio/video recording (as applicable)?	N/A		
10. Does the physical form match the waste stream description, waste matrix code and IDC?	Yes		
11. Did the VE event result in an IDC/Waste Matrix Code change? If so, was an NCR initiated?	No		
12. Were the waste material parameters documented correctly?	Yes		
13. Was the presence or absence of prohibited items properly identified? o If prohibited items were identified, were NCRs initiated?	Yes		
14. Has the description of rigid liners and layers of confinement been properly documented?	Yes		
15. Was the drum age criteria (DAC) entered correctly and completely? o Closure Method(s) o Liner Puncture Status o Layers of Confinement o Closure Date o Packaging Configuration o Type and number of filters, as applicable o Liner hole presence and diameter, as applicable	Yes		
16. Have filters been installed or removed from drum as recorded in WTS, as applicable?	N/A		
17. Hand calculations and unit conversions are correct? o Does the packaging weight plus the net weight equal the gross weight of the drum in the estimated waste material parameters, and for the unit conversions that are entered by volume or weight?	Yes		
18. Were all units and significant figures used correct for all reported volumes/weights?	Yes		

Batch Id VEB14-00254 **Open Date** 25-AUG-14 **Close Date** 25-AUG-14

Reviewer RONALD GRISE **Approval Level** Independent Technical Reviewer

Approval Date 26-AUG-14 **Review Iteration** 1

Question Text	Answer	Requirement	Comment
19. Has the data been reviewed for transcription errors as appropriate?	Yes		
20. Were the Visual Examination QAOs met? o Precision o Accuracy o Completeness o Comparability	Yes		
21. Is each data form signed by qualified VE Operators, as applicable per the appropriate procedure being used?	Yes		
22. Was the audio/video check satisfactory, as applicable?	N/A		
23. Was the scale or balance check weight event satisfactory, as applicable?	N/A		
24. Are the QC weight checks within the tolerance of the scale or balance, as applicable?	N/A		
25. Were any NCRs generated for drums containing prohibited items or any nonconforming conditions that failed to meet DQOs or QAOs? o Include the NCRs as appropriate, in the Batch Data Report.	No		
26. Were the rework requirements clearly identified in WTS or on the BDR?	N/A		

Batch Id VEB14-00254 **Open Date** 25-AUG-14 **Close Date** 25-AUG-14

Reviewer REED WALKER **Approval Level** SPM Data Validation

Approval Date 26-AUG-14 **Review Iteration** 1

Question Text	Answer	Requirement	Comment
(1) Has the batch received a Data Generation Level Independent Technical Review?	Yes	MP-TRUW-8.2, C3-10b(1)	
(2) Are the batch data review checklists complete?	Yes	MP-TRUW-8.2, C3-10b(1)	
(3) When identified, were PCBs, mercury, lead, or other hazardous contaminants consistent with the waste stream AK Summary Report(s) and/or AK documentation?	N/A	MP-TRUW-8.2, C4-3	None were identified.
(4) Are any ignitable, corrosive, or reactive wastes identified?	No	MP-TRUW-8.2, C4-3	
(5) Are the packaging configurations identified on the VE consistent with the waste stream AK Summary Report(s) and/or AK documentation?	Yes	MP-TRUW-8.2, C4-3	
(6) Do the drums in this batch contain typical waste items consistent with waste stream AK Summary Report(s) and/or AK documentation?	Yes	MP-TRUW-8.2, C4-3	
(7) Are the Waste Matrix Codes and physical form descriptions consistent with AK?	Yes	MP-TRUW-8.2, C4-3	
(8) Have all AK discrepancies been resolved and have all AK Resolution checklists been approved? Reference all waste stream AK documentation used in review of this data package.	N/A	MP-TRUW-8.2, C4-3	No discrepancies identified.
(9) Does the batch report identify the correct implementing procedure number and revision number used for this testing method?	Yes	MP-TRUW-8.2, C3-4 and Table C3-11	
(10) Have the Waste Matrix Code (WMC) and IDC for all drums in the batch remained the same as originally assigned by the historical designation? NOTE: If not, note the drum number in the comment field and notify the Acceptable Knowledge Expert (AKE) if an NCR does not exist for the WMC and IDC change.	Yes	MP-TRUW-8.2, C-3c and C1-4	
(11) Does the physical form of the waste match the WMC, waste stream description, and identify the absence of prohibited items?	Yes	MP-TRUW-8.2, C-3c and C1-4	
(12) If observable liquids exist in the drum, is an estimate of quantity given?	N/A	MP-TRUW-8.2, C-3c and C1-4	No liquids identified.
(13) Precision: Have all discrepancies been reconciled between the operator and the ITR with regard to identification of WMC, liquids in excess of TSDF-WAC limits, and compressed gases?	Yes	MP-TRUW-8.2 C3-4b	
(14) Accuracy: Have all operators passed a comprehensive examination and demonstrated satisfactory performance in the presence of the VE expert during initial and subsequent qualifications?	Yes	MP-TRUW-8.2 C3-4b	
(15) Completeness: Has a validated VE data form been obtained for 100% of the waste containers subject to VE?	Yes	MP-TRUW-8.2 C3-4b	
(16) Comparability: Has the comparability of VE data from different operators been enhanced by use of standardized VE procedures and operator qualifications?	Yes	MP-TRUW-8.2 C3-4b	
(17) Does the data for all containers within this batch meet the review, validation, and verification requirements? · Are proper units (e.g. Liters or pounds) and significant figure used? · Is the BDR complete (all pages identified in the BDR and numbered according)? - VE Batch Coversheet - Table of Contents (manual review only) - VE Analysis Reports - Analytical Balance Calibration Checklist (if applicable) - ITR Checklist (Form-1415)	Yes	MP-TRUW-8.2, C3-10b and Table C3-11	

Batch Id VEB14-00254 **Open Date** 25-AUG-14 **Close Date** 25-AUG-14

Reviewer REED WALKER **Approval Level** SPM Data Validation

Approval Date 26-AUG-14 **Review Iteration** 1

Question Text	Answer	Requirement	Comment
- Associated NCRs - Audio/Video Recordings (if applicable)			
(18) Do the drum reports contain the (a) Batch Data Report number and date, (b) waste container number (c)WMC, (d) implementing procedure and revision, (e) audio/video recording reference, (f) audio and video QC checks were performed and satisfactory, (g) verification that the physical form matches the waste stream description and WMC, (h) absence of prohibited items, (i) gross container weight, (j) waste material parameter weights, and (k) signature and date of examination (signatures of both operators when applicable)?	Yes	MP-TRUW-8.2, C1-4 and Table C3-11	
(19) Is the description of container contents detailed enough to provide verification of estimated weights for the waste matrix parameters identified?	Yes	MP-TRUW-8.2, C1-4 and Table C3-11	
(20) Is there a valid second weight check for every 10 items?	N/A	MP-TRUW-8.2, C1-4	Not required for this batch.
(21) Verification of two operator signatures when doing VE?	Yes	MP-TRUW-8.2, C-3d(1) and Table C3-11	
(22) Are there 20 or fewer containers in the batch?	Yes	MP-TRUW-8.2, C1-3 and C3-10	
(23) Review all NCRs (open and closed). Can the batch be approved?	Yes	MP-TRUW-8.2, C3-13	No NCRs.
(24) All data associated with this BDR is acceptable for signature release?	Yes	MP-TRUW-8.2, C3-10b and C3-10b(1)	

Batch Id VEB14-00254 **Open Date** 25-AUG-14 **Close Date** 25-AUG-14

Esignature History

Esig Approval ID	User ID	Esig Date	Approval Level	Comments
2822550	RWALKER	26-AUG-14	SPM	SPM validation complete. Promote batch.
2819936	RGRISE	26-AUG-14	ITR	Promote batch to SPM level.

AMWTP
Advanced Mixed Waste Treatment Project

AMWTP

Non-Conformance Report

Date: 26-Sep-2014

Time: 15:37

*****Batch NCR(s)*****

Batch Type	VEB	Batch ID	VEB14-00254		
Trackwise Number		**Status**		**Opened Date**	**Closed Date**

*****Container NCR(s)*****

Container ID *or related Batch ID*	Trackwise Number	Status	Opened Date	Closed Date

*****End of Non-Conformance Report*****

AMWTP
Advanced Mixed Waste Treatment Project

AMWTP

Scale Check Event Report

Date: 26-Sep-2014

Time: 15:37

Batch Id	VEB14-00254	**Container Id**	10527940
Batch Id	VEB14-00254	**Container Id**	10527926
Batch Id	VEB14-00254	**Container Id**	10527946
Batch Id	VEB14-00254	**Container Id**	10527579
Batch Id	VEB14-00254	**Container Id**	10527927
Batch Id	VEB14-00254	**Container Id**	10527571
Batch Id	VEB14-00254	**Container Id**	10527600
Batch Id	VEB14-00254	**Container Id**	10527943
Batch Id	VEB14-00254	**Container Id**	10527580
Batch Id	VEB14-00254	**Container Id**	10527935
Batch Id	VEB14-00254	**Container Id**	10527923
Batch Id	VEB14-00254	**Container Id**	10527933
Batch Id	VEB14-00254	**Container Id**	10527955
Batch Id	VEB14-00254	**Container Id**	10527918
Batch Id	VEB14-00254	**Container Id**	10527925
Batch Id	VEB14-00254	**Container Id**	10527919
Batch Id	VEB14-00254	**Container Id**	10527785
Batch Id	VEB14-00254	**Container Id**	10527922
Batch Id	VEB14-00254	**Container Id**	10527782
Batch Id	VEB14-00254	**Container Id**	10527956

VE2

AMWTP Advanced Mixed Waste Treatment Project	Advanced Mixed Waste Treatment Project REQUALIFICATION PACKAGE Visual Examiner	QPVE0001 Rev. 4

Employee Name Michael Reider S# 106134

VISUAL EXAMINER

Requalification Package Number: QPVE0001

The manager granting qualification acknowledges that the employee possesses the knowledge, skills, and abilities to perform this job function correctly the first time, safely and compliantly.

Qualification granted by:	Nathan Hafner		06/13/13
Production Manager	Print Name	Signature	Date

Form-1268, Production System Access Request, has been submitted for the appropriate WTS role(s) for this individual.	Nathan Hafner		06/13/13
	Print Name	Signature	Date

Required Attachments: Check box if attached	Remedial Form ☐ (If used)	Exception Form ☐ (If used)

Qual Pack Issued By :	P. REDDISH	TPDIRECC	5/28/11
	Print Name	Signature	Date

Qualification Package Approval Section

Line Manager Approval	S. Peterman	Signature on file	10/2/2012
	Print Name	Signature	Date

Training Manager Approval	Todd Golberg	Signature on file	10/2/2012
	Print Name	Signature	Date

TRAINING DEPT.
JUN 13 2013

QC 6/27/13

Employee Name Michael Reider S# 106134

Revision History			
Revision Number	Affected Pages	Description of Change	Date
0	All	Initial Issue. QPVE0001 was generated to replace QPOT4B and FQPOT10A. QPVEE0002 and QPVE0003 were generated as delta qualification for personnel who were current in QPOT4B and FQPOT10A.	05/30/07
1	All	Update the VE qual. pack to meet new WIPP 311 Permit Modifications. Retire QP-OT-4B Characterization VE; FQP-OT-10A Facility VE; QCCVEFVE Characterization Visual Examination Operators to qualify as Facility Visual Examination Operators; QPVE0002 Pre-Qualified Visual Examiner; and QPVE0003 Pre-Qualified Visual Examiner.	05/30/08
2	All	Revised JTAL to make more specific to VE tasks.	03/04/09
3	All	Made editorial changes. Updated format and incorporated evaluation standard.	3/29/10
4	All	Periodic review and update.	10/2/12

Mod Letter	Affected Pages	Description of Change	Management Approval *	Date

* Manager signature required for modifications.

AMWTP Advanced Mixed Waste Treatment Project	*Advanced Mixed Waste Treatment Project* *REQUALIFICATION PACKAGE* *Visual Examiner*	**QPVE0001** **Rev. 4**

Employee Name Michael Reider S# 106134

Signature Roster

Personnel signing blocks in this qualification package must print their name legibly, sign and initial. Signature by Evaluators indicates they have used the Training/Evaluation Standard and performed evaluations IAW MP-RTQP-14.13. Copy this sheet if necessary.

Name (Printed)	Signature	Initials
P. Reider	P Reider	PR
Ron Grise	Ron Grise	RG
Shane Harvey	Shane Harvey	SH
Nathan Hoffman	Nathan Hoffman	NH

Employee Name Michael Reider S# 106134

1.0 Scope

This requalification package assures the knowledge and skill requirements for personnel performing VE at AMWTP are maintained. This requalification is valid for 24 months, after which, another requalification checklist must be completed to maintain qualification status.

Individuals may be disqualified for any of the following: Extended absence, identified training expires, failure of recurring proficiency/performance exams, performance deficiencies, etc. as applicable.

2.0 Prerequisites

Ensure the trainee has successfully completed the requirements listed below before completing this requalification package.

The employee has completed all initial training *and is current* on the applicable qualifications / checklists listed on the ITP to support this qualification package.

Employee's Production Manager — Date: 05/28/13

	Date Requirement Was Completed	**Signature** (Training Representative or SS)	Date
2.1 Completion of VE qualification (QPVE0001).	6/24/11	[signature]	5/28/13

Employee Name Michael Reider S# 106134

3.0 Initial & Continuing Training / Knowledge / Required Reading

The initial training courses identified pertain to the job function/duties and will be verified complete by the employee's SS, the VEE SME or Lead, or a Training Representative.

3.1 Training Courses (Indicate Courses that are Recurring):	Date Requirement was Complete	Recurring Training /Qualification Frequency
3.1.1 0AWT1118, LLW/MLLW Disposition Plan	1/28/12	24 months
VEE SME or Lead, Training Representative or SS verify training courses are complete:	[signature]	5/28/13
	Signature	Date

Sign-off by the VEE indicates that each required reading has been reviewed IAW with the Training/Evaluation Standard and that the Trainee demonstrates a satisfactory understanding of how it pertains to their job responsibilities.

3.2 Required Reading: Operating Instructions	VEE	Date
3.2.1 Discuss any recent changes to INST-OI-34 and INST-FOI-17.	[signature]	5-20-13
3.3 Required Reading: Other Documents	VEE	Date
3.3.1 None	N/A	N/A

Sign-off by the OJT Instructor or SS indicates that each knowledge item has been reviewed IAW with the Training/Evaluation Standard and that the Trainee demonstrates a satisfactory understanding of how it pertains to their job responsibilities.

3.4 Knowledge:	VEE / SS Signature	Date
3.4.1 Discuss any lessons learned concerning Visual Examination.	[signature]	5-20-13
3.4.2 Discuss the any applicable Criticality Working Requirements (CWRs).	[signature]	5-20-13

Employee Name Michael Reider S# 106134

3.4	Knowledge:	VEE / SS Signature	Date

4.0 OJT Training Objectives

The elements below are to be performed (P), simulated (S), or discussed (D) as indicated. Circle all that apply.

Sign-off by the VEE (as the Evaluator) indicates successful performance of the task. If the trainee cannot perform the task without coaching, terminate the Performance Assessment.

	VE Over-Train Performance Objectives	P S D	Evaluator Signature & date
4.1	Generate (enter) examination related data into WTS.	P (S)	Ron A 5-2013
4.2	Verify (concur with) examination-related data entered into WTS.	P (S)	Ron A 5-20-13
4.3	Identify closure methods and layers of confinement.	P (S)	Ron A 5-20-13
4.4	Discuss how to ensure DQOs are met.	(D)	Ron A 5-20-13
4.5	Identify packaging configurations.	P (S)	Ron A 5-20-13
4.6	Assign proper Waste Material Parameters to waste.	P (S)	Ron A 5-20-13
4.7	Perform weight and volume conversions using procedural aids.	P (S)	Ron A 5-20-13
4.8	Assign the correct IDC and Waste Matrix Code during the VE process.	P (S)	Ron A 5-20-13
4.9	Identify the path forward for prohibited and nonconforming items and the associated NCRs.	P (S)	Ron A 5-20-13
4.10	Identify common and conditional waste items through VE or video.	P (S)	Ron A 5-20-13
4.11	Identify packaging and waste materials.	P (S)	Ron A 5-20-13

AMWTP Advanced Mixed Waste Treatment Project	*Advanced Mixed Waste Treatment Project* *REQUALIFICATION PACKAGE* *Visual Examiner*	QPVE0001 Rev. 4

Employee Name Michael Reider S# 106134

VE Over-Train Performance Objectives	P S D	Evaluator Signature & date
4.12 Identify prohibited and suspect items through VE or video.	P (S)	5-20-13
4.13 Assign correct IDCs for newly generated secondary waste and compacted waste.	(P) S	5-20-13
4.14 Estimate volumes and nominal densities of waste.	P (S)	5-20-13
4.15 Identify rigid liner types and their status and condition.	(P) S	5-20-13
4.16 Identify filter models and update WTS for filter removal/insertion on the Container Filters screen.	(P) S	5-20-13
4.17 Perform Newly Generated Waste (NGW) package VE.	(P) S	5-20-13
4.18 Perform Newly Generated Waste Closure VE.	(P) S	5-20-13
4.19 Perform VE of Legacy Waste.	P (S)	5-20-13
4.20 Perform Boxline VE (BiD).	(P) S	5-20-13
4.21 Perform Boxline VE (DiD) using volume estimates and nominal densities.	(P) S	5-20-13
4.22 Perform RTR VE Update (RVU) for Prohibited Item removal (using volume estimates and nominal densities).	P (S)	5-20-13
4.23 Perform RVU for the final configuration of a Coring Drum.	P (S)	5-20-13
4.24 Perform RVU for the final configuration of a Treatment Drum.	P (S)	5-20-13
4.25 Perform an update of an NCR for Treatment or the removal of suspect / prohibited items.	P (S)	5-20-13

AMWTP Advanced Mixed Waste Treatment Project	*Advanced Mixed Waste Treatment Project* *REQUALIFICATION PACKAGE* *Visual Examiner*	**QPVE0001** **Rev. 4**

Employee Name Michael Beider S# 106134

5.0 ***Emergency / Abnormal Conditions***
The elements below are to be simulated (S) or discussed (D) as indicated. If both S and D are indicated, then circle which one was used. Sign-off by the SS indicates successful performance of the task. If the trainee cannot perform the task without coaching, terminate the Performance Assessment.

		P S D	SS Signature	Date
5.1	Fire / Alarm (OI-33, FOI-16, AOI-10, RS&C-6.12)	(S) D		05/28/13
5.2	Location of fire extinguishers / fire alarm boxes in WMF-634, 676, and 628.	(S) D		05/28/13
5.3	Dropped waste container (MP-EC&P-12.9)	(S) D		05/28/13
5.4	Breached Container (INST-OI-11; INST-FOI-20)	(S) D		05/28/13
5.5	CAM Alarm (OI-11, RS&C-6.12)	(S) D		05/28/13
5.6	Spill / Contamination Release (INST-OI-88)	(S) D		05/28/13
5.7	Injured Person (MP-ISIH-2.54, RS&C-6.12)	(S) D		05/28/13
5.8	Loss of ventilation/air system (OI-11, AOI-05, OI-16, OI-33)	(S) D		05/28/13
5.9	Loss of Commercial Power (AOI-04)	(S) D		05/28/13
5.10	Evacuation (EP&C-12.16)	(S) D		05/28/13
5.11	Take Cover (EP&C-12.16)	(S) D		05/28/13

AMWTP Advanced Mixed Waste Treatment Project	*Advanced Mixed Waste Treatment Project* *REQUALIFICATION PACKAGE* *Visual Examiner*	QPVE0001 Rev. 4

Employee Name Michael Beider S# 106134

6.0 **Examinations** (Sections 1-5 must be complete prior to testing)	**NO TEST REQUIRED**

7.0 **Recommendation for Requalification**		
After discussion with the candidate concerning this job scope, the Visual Examination Expert (VEE) acknowledges that the trainee possesses the knowledge, skills, and abilities to perform this job function correctly the first time, safely and compliantly. In addition, the VEE has completed the quality validation of this document in accordance with the requirements in MP-DOCS-18.2. (Guidance is given in the Training/Evaluation Standard)		
Visual Examination Expert	Ron A	6-13-13
Title	Signature	Date

Upon satisfactory completion of this qualification package, the Characterization or Facility Production Manager may grant Re-Qualification to the trainee on the front cover of this re-qualification package.

DIVIDER

PAGE

AMWTP Advanced Mixed Waste Treatment Project	*Advanced Mixed Waste Treatment Project* *REQUALIFICATION PACKAGE* *Visual Examiner*	**QPVE0001** **Rev. 4**

Employee Name Anthony Sigman S# 107941

VISUAL EXAMINER

Requalification Package Number: QPVE0001

The manager granting qualification acknowledges that the employee possesses the knowledge, skills, and abilities to perform this job function correctly the first time, safely and compliantly.

Qualification granted by:	Brett Stacey		01/30/14
Production Manager	Print Name	Signature	Date

Form-1268, Production System Access Request, has been submitted for the appropriate WTS role(s) for this individual.	Brett Stacey		01/30/14
	Print Name	Signature	Date

Required Attachments: Check box if attached	Remedial Form ☐ (If used)	Exception Form ☐ (If used)

Qual Pack Issued By :	Holly Clark	Holly Clark	1/29/14
	Print Name	Signature	Date

Qualification Package Approval Section

Line Manager Approval	S. Peterman	Signature on file	10/2/2012
	Print Name	Signature	Date

Training Manager Approval	Todd Golberg	Signature on file	10/2/2012
	Print Name	Signature	Date

TRAINING DEPT.
JAN 30 2014

Initials: _____

AMWTP Advanced Mixed Waste Treatment Project	*Advanced Mixed Waste Treatment Project* *REQUALIFICATION PACKAGE* *Visual Examiner*	QPVE0001 Rev. 4

Employee Name Anthony Sigmon S# 107941

Revision History			
Revision Number	Affected Pages	Description of Change	Date
0	All	Initial Issue. QPVE0001 was generated to replace QPOT4B and FQPOT10A. QPVEE0002 and QPVE0003 were generated as delta qualification for personnel who were current in QPOT4B and FQPOT10A.	05/30/07
1	All	Update the VE qual. pack to meet new WIPP 311 Permit Modifications. Retire QP-OT-4B Characterization VE; FQP-OT-10A Facility VE; QCCVEFVE Characterization Visual Examination Operators to qualify as Facility Visual Examination Operators; QPVE0002 Pre-Qualified Visual Examiner; and QPVE0003 Pre-Qualified Visual Examiner.	05/30/08
2	All	Revised JTAL to make more specific to VE tasks.	03/04/09
3	All	Made editorial changes. Updated format and incorporated evaluation standard.	3/29/10
4	All	Periodic review and update.	10/2/12

Mod Letter	Affected Pages	Description of Change	Management Approval *	Date

* Manager signature required for modifications.

AMWTP Advanced Mixed Waste Treatment Project	*Advanced Mixed Waste Treatment Project* *REQUALIFICATION PACKAGE* *Visual Examiner*	**QPVE0001** **Rev. 4**

Employee Name A. Sigmon S# 107941

Signature Roster

Personnel signing blocks in this qualification package must print their name legibly, sign and initial. Signature by Evaluators indicates they have used the Training/Evaluation Standard and performed evaluations IAW MP-RTQP-14.13. Copy this sheet if necessary.

Name (Printed)	Signature	Initials
Holly Clark	Holly Clark	HC
T L Hamilton	T L Hamilton	TLH
Ron Grise	Ron Grise	RG
Rick Hilath	Rick Hilath	RH
Brett Stacey	Brett Stacey	BS

AMWTP Advanced Mixed Waste Treatment Project	*Advanced Mixed Waste Treatment Project* *REQUALIFICATION PACKAGE* *Visual Examiner*	**QPVE0001** **Rev. 4**

Employee Name A. Sigmon S# 10941

1.0 **Scope**
This requalification package assures the knowledge and skill requirements for personnel performing VE at AMWTP are maintained. This requalification is valid for 24 months, after which, another requalification checklist must be completed to maintain qualification status. Individuals may be disqualified for any of the following: Extended absence, identified training expires, failure of recurring proficiency/performance exams, performance deficiencies, etc. as applicable.

2.0 **Prerequisites**
Ensure the trainee has successfully completed the requirements listed below before completing this requalification package.
The employee has completed all initial training *and is current* on the applicable qualifications / checklists listed on the ITP to support this qualification package. Employee's Production Manager — Date: 1/29/14

	Date Requirement Was Completed	**Signature** (Training Representative or SS)	**Date**
2.1 Completion of VE qualification (QPVE0001).	02/14/12	Holly Clark	1/29/14

Employee Name A. Sigmon S# 107941

3.0 Initial & Continuing Training / Knowledge / Required Reading

The initial training courses identified pertain to the job function/duties and will be verified complete by the employee's SS, the VEE SME or Lead, or a Training Representative.

3.1 Training Courses (Indicate Courses that are Recurring):	Date Requirement was Complete	Recurring Training /Qualification Frequency
3.1.1 0AWT1118, LLW/MLLW Disposition Plan	8/27/12	24 months
VEE SME or Lead, Training Representative or SS verify training courses are complete:	Holly Clark Signature	1/29/14 Date

Sign-off by the VEE indicates that each required reading has been reviewed IAW with the Training/Evaluation Standard and that the Trainee demonstrates a satisfactory understanding of how it pertains to their job responsibilities.

3.2 Required Reading: Operating Instructions	VEE	Date
3.2.1 Discuss any recent changes to INST-OI-34 and INST-FOI-17.	Ron A	1-30-14
3.3 Required Reading: Other Documents	VEE	Date
3.3.1 None	N/A	N/A

Sign-off by the OJT Instructor or SS indicates that each knowledge item has been reviewed IAW with the Training/Evaluation Standard and that the Trainee demonstrates a satisfactory understanding of how it pertains to their job responsibilities.

3.4 Knowledge:	VEE / SS Signature	Date
3.4.1 Discuss any lessons learned concerning Visual Examination.	Ron A	1-30-14
3.4.2 Discuss the any applicable Criticality Working Requirements (CWRs).	Ron A	1-30-14

Employee Name A. Sigmon S# 107941

3.4 Knowledge:	VEE / SS Signature	Date

4.0 OJT Training Objectives

The elements below are to be performed (P), simulated (S), or discussed (D) as indicated. Circle all that apply.

Sign-off by the VEE (as the Evaluator) indicates successful performance of the task. If the trainee cannot perform the task without coaching, terminate the Performance Assessment.

VE Over-Train Performance Objectives		P S D	Evaluator Signature & date
4.1	Generate (enter) examination related data into WTS.	P (S)	1-30-14
4.2	Verify (concur with) examination-related data entered into WTS.	P (S)	1-30-14
4.3	Identify closure methods and layers of confinement.	P (S)	1-30-14
4.4	Discuss how to ensure DQOs are met.	(D)	1-30-14
4.5	Identify packaging configurations.	P (S)	1-30-14
4.6	Assign proper Waste Material Parameters to waste.	P (S)	1-30-14
4.7	Perform weight and volume conversions using procedural aids.	P (S)	1-30-14
4.8	Assign the correct IDC and Waste Matrix Code during the VE process.	P (S)	1-30-14
4.9	Identify the path forward for prohibited and nonconforming items and the associated NCRs.	P (S)	1-30-14
4.10	Identify common and conditional waste items through VE or video.	P (S)	1-30-14
4.11	Identify packaging and waste materials.	P (S)	1-30-14

AMWTP Advanced Mixed Waste Treatment Project	*Advanced Mixed Waste Treatment Project* *REQUALIFICATION PACKAGE* *Visual Examiner*	QPVE0001 Rev. 4

Employee Name A. Sigman S# 107941

VE Over-Train Performance Objectives		PSD	Evaluator Signature & date
4.12	Identify prohibited and suspect items through VE or video.	P(S)	1-30-14
4.13	Assign correct IDCs for newly generated secondary waste and compacted waste.	P(S)	1-30-14
4.14	Estimate volumes and nominal densities of waste.	P(S)	1-30-14
4.15	Identify rigid liner types and their status and condition.	P(S)	1-30-14
4.16	Identify filter models and update WTS for filter removal/insertion on the Container Filters screen.	P(S)	1-30-14
4.17	Perform Newly Generated Waste (NGW) package VE.	P(S)	1-30-14
4.18	Perform Newly Generated Waste Closure VE.	P(S)	1-30-14
4.19	Perform VE of Legacy Waste.	P(S)	1-30-14
4.20	Perform Boxline VE (BiD).	P(S)	1-30-14
4.21	Perform Boxline VE (DiD) using volume estimates and nominal densities.	P(S)	1-30-14
4.22	Perform RTR VE Update (RVU) for Prohibited Item removal (using volume estimates and nominal densities).	P(S)	1-30-14
4.23	Perform RVU for the final configuration of a Coring Drum.	P(S)	1-30-14
4.24	Perform RVU for the final configuration of a Treatment Drum.	P(S)	1-30-14
4.25	Perform an update of an NCR for Treatment or the removal of suspect / prohibited items.	P(S)	1-30-14

Employee Name A. Sigmon S# 107941

5.0 **Emergency / Abnormal Conditions**
The elements below are to be simulated (S) or discussed (D) as indicated. If both S and D are indicated, then circle which one was used. Sign-off by the SS indicates successful performance of the task. If the trainee cannot perform the task without coaching, terminate the Performance Assessment.

		P S D	SS Signature	Date
5.1	Fire / Alarm (OI-33, FOI-16, AOI-10, RS&C-6.12)	S (D)		1-30-14
5.2	Location of fire extinguishers / fire alarm boxes in WMF-634, 676, and 628.	S (D)		1-30-14
5.3	Dropped waste container (MP-EC&P-12.9)	S (D)		1-30-14
5.4	Breached Container (INST-OI-11; INST-FOI-20)	S (D)		1-30-14
5.5	CAM Alarm (OI-11, RS&C-6.12)	S (D)		1-30-14
5.6	Spill / Contamination Release (INST-OI-88)	S (D)		1-30-14
5.7	Injured Person (MP-ISIH-2.54, RS&C-6.12)	S (D)		1-30-14
5.8	Loss of ventilation/air system (OI-11, AOI-05, OI-16, OI-33)	S (D)		1-30-14
5.9	Loss of Commercial Power (AOI-04)	S (D)		1-30-14
5.10	Evacuation (EP&C-12.16)	S (D)		1-30-14
5.11	Take Cover (EP&C-12.16)	S (D)		1-30-14

AMWTP Advanced Mixed Waste Treatment Project	*Advanced Mixed Waste Treatment Project* *REQUALIFICATION PACKAGE* *Visual Examiner*	**QPVE0001** **Rev. 4**

Employee Name A. Sigmon S# 109941

6.0 **Examinations** (Sections 1-5 must be complete prior to testing)	**NO TEST REQUIRED**

7.0 **Recommendation for Requalification**		
After discussion with the candidate concerning this job scope, the Visual Examination Expert (VEE) acknowledges that the trainee possesses the knowledge, skills, and abilities to perform this job function correctly the first time, safely and compliantly. In addition, the VEE has completed the quality validation of this document in accordance with the requirements in MP-DOCS-18.2. (Guidance is given in the Training/Evaluation Standard)		
Visual Examination Expert	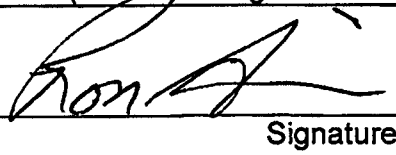	1-30-14
Title	Signature	Date

Upon satisfactory completion of this qualification package, the Characterization or Facility Production Manager may grant Re-Qualification to the trainee on the front cover of this re-qualification package.

DIVIDER

PAGE

AMWTP Advanced Mixed Waste Treatment Project	*Advanced Mixed Waste Treatment Project* *REQUALIFICATION PACKAGE* *Visual Examiner*	**QPVE0001** **Rev. 4**

Employee Name Shirley Perez S# 102313

VISUAL EXAMINER

Requalification Package Number: QPVE0001

The manager granting qualification acknowledges that the employee possesses the knowledge, skills, and abilities to perform this job function correctly the first time, safely and compliantly.

Qualification granted by:	Nathan Loftus		06/05/13
Production Manager	Print Name	Signature	Date

Form-1268, Production System Access Request, has been submitted for the appropriate WTS role(s) for this individual.	Nathan Loftus		06/05/13
	Print Name	Signature	Date

Required Attachments: Check box if attached	Remedial Form ☐ (If used)	Exception Form ☐ (If used)

Qual Pack Issued By :	P. Resnick	TPDRC TRAINING DEPT.	6/6/13
	Print Name	Signature	Date

JUN 06 2013

Qualification Package Approval Section Initials KM

Line Manager Approval	S. Peterman	Signature on file	10/2/2012
	Print Name	Signature	Date

Training Manager Approval	Todd Golberg	Signature on file	10/2/2012
	Print Name	Signature	Date

QC 6-10-13 KM

AMWTP Advanced Mixed Waste Treatment Project	*Advanced Mixed Waste Treatment Project* *REQUALIFICATION PACKAGE* *Visual Examiner*	**QPVE0001** **Rev. 4**

Employee Name Shirley Perez S# 102313

Revision History

Revision Number	Affected Pages	Description of Change	Date
0	All	Initial Issue. QPVE0001 was generated to replace QPOT4B and FQPOT10A. QPVEE0002 and QPVE0003 were generated as delta qualification for personnel who were current in QPOT4B and FQPOT10A.	05/30/07
1	All	Update the VE qual. pack to meet new WIPP 311 Permit Modifications. Retire QP-OT-4B Characterization VE; FQP-OT-10A Facility VE; QCCVEFVE Characterization Visual Examination Operators to qualify as Facility Visual Examination Operators; QPVE0002 Pre-Qualified Visual Examiner; and QPVE0003 Pre-Qualified Visual Examiner.	05/30/08
2	All	Revised JTAL to make more specific to VE tasks.	03/04/09
3	All	Made editorial changes. Updated format and incorporated evaluation standard.	3/29/10
4	All	Periodic review and update.	10/2/12

Mod Letter	Affected Pages	Description of Change	Management Approval *	Date

* Manager signature required for modifications.

AMWTP Advanced Mixed Waste Treatment Project	*Advanced Mixed Waste Treatment Project* *REQUALIFICATION PACKAGE* *Visual Examiner*	QPVE0001 Rev. 4

Employee Name Shirley Perez S# 102313

Signature Roster

Personnel signing blocks in this qualification package must print their name legibly, sign and initial. Signature by Evaluators indicates they have used the Training/Evaluation Standard and performed evaluations IAW MP-RTQP-14.13. Copy this sheet if necessary.

Name (Printed)	Signature	Initials
P. REDDISH		
Shirley Perez		SJP
Ron Grise		
Brett Steele		
Nathan Watts		

AMWTP Advanced Mixed Waste Treatment Project	*Advanced Mixed Waste Treatment Project* *REQUALIFICATION PACKAGE* *Visual Examiner*	**QPVE0001** **Rev. 4**

Employee Name Shirley Perez S# 102313

1.0 Scope

This requalification package assures the knowledge and skill requirements for personnel performing VE at AMWTP are maintained. This requalification is valid for 24 months, after which, another requalification checklist must be completed to maintain qualification status.

Individuals may be disqualified for any of the following: Extended absence, identified training expires, failure of recurring proficiency/performance exams, performance deficiencies, etc. as applicable.

2.0 Prerequisites

Ensure the trainee has successfully completed the requirements listed below before completing this requalification package.

The employee has completed all initial training *and is current* on the applicable qualifications / checklists listed on the ITP to support this qualification package.

B Stan — Employee's Production Manager

05/21/13 — Date

	Date Requirement Was Completed	**Signature** (Training Representative or SS)	**Date**
2.1 Completion of VE qualification (QPVE0001).	6/17/11	TPD Rec	5/20/13

Employee Name Shirley Perez S# 10213

3.0 Initial & Continuing Training / Knowledge / Required Reading

The initial training courses identified pertain to the job function/duties and will be verified complete by the employee's SS, the VEE SME or Lead, or a Training Representative.

3.1 Training Courses (Indicate Courses that are Recurring):	Date Requirement was Complete	Recurring Training /Qualification Frequency
3.1.1 0AWT1118, LLW/MLLW Disposition Plan	2/9/12	24 months
VEE SME or Lead, Training Representative or SS verify training courses are complete:	J P Perez Signature	5/20/13 Date

Sign-off by the VEE indicates that each required reading has been reviewed IAW with the Training/Evaluation Standard and that the Trainee demonstrates a satisfactory understanding of how it pertains to their job responsibilities.

3.2 Required Reading: Operating Instructions	VEE	Date
3.2.1 Discuss any recent changes to INST-OI-34 and INST-FOI-17.	Ron A	5-21-13
3.3 Required Reading: Other Documents	**VEE**	**Date**
3.3.1 None	N/A	N/A

Sign-off by the OJT Instructor or SS indicates that each knowledge item has been reviewed IAW with the Training/Evaluation Standard and that the Trainee demonstrates a satisfactory understanding of how it pertains to their job responsibilities.

3.4 Knowledge:	VEE / SS Signature	Date
3.4.1 Discuss any lessons learned concerning Visual Examination.	Ron A	5-21-13
3.4.2 Discuss the any applicable Criticality Working Requirements (CWRs).	Ron A	5-21-13

AMWTP Advanced Mixed Waste Treatment Project	Advanced Mixed Waste Treatment Project REQUALIFICATION PACKAGE Visual Examiner	QPVE0001 Rev. 4

Employee Name Shirley Perez S# 102313

3.4 Knowledge:	VEE / SS Signature	Date

4.0 OJT Training Objectives

The elements below are to be performed (P), simulated (S), or discussed (D) as indicated. Circle all that apply.

Sign-off by the VEE (as the Evaluator) indicates successful performance of the task. If the trainee cannot perform the task without coaching, terminate the Performance Assessment.

VE Over-Train Performance Objectives		P S D	Evaluator Signature & date
4.1	Generate (enter) examination related data into WTS.	(P) S	5-21-13
4.2	Verify (concur with) examination-related data entered into WTS.	(P) S	5-21-13
4.3	Identify closure methods and layers of confinement.	(P) S	5-21-13
4.4	Discuss how to ensure DQOs are met.	(D)	5-21-13
4.5	Identify packaging configurations.	P (S)	5-21-13
4.6	Assign proper Waste Material Parameters to waste.	(P) S	5-21-13
4.7	Perform weight and volume conversions using procedural aids.	P (S)	5-21-13
4.8	Assign the correct IDC and Waste Matrix Code during the VE process.	P (S)	5-21-13
4.9	Identify the path forward for prohibited and nonconforming items and the associated NCRs.	P (S)	5-21-13
4.10	Identify common and conditional waste items through VE or video.	P (S)	5-21-13
4.11	Identify packaging and waste materials.	P (S)	5-21-13

AMWTP Advanced Mixed Waste Treatment Project	*Advanced Mixed Waste Treatment Project* *REQUALIFICATION PACKAGE* *Visual Examiner*	QPVE0001 Rev. 4

Employee Name Shirley Perez S# 102313

VE Over-Train Performance Objectives		P S D	Evaluator Signature & date
4.12	Identify prohibited and suspect items through VE or video.	P(S)	5-21-13
4.13	Assign correct IDCs for newly generated secondary waste and compacted waste.	(P)S	5-21-13
4.14	Estimate volumes and nominal densities of waste.	P(S)	5-21-13
4.15	Identify rigid liner types and their status and condition.	P(S)	5-21-13
4.16	Identify filter models and update WTS for filter removal/insertion on the Container Filters screen.	P(S)	5-21-13
4.17	Perform Newly Generated Waste (NGW) package VE.	(P)S	5-21-13
4.18	Perform Newly Generated Waste Closure VE.	(P)S	5-21-13
4.19	Perform VE of Legacy Waste.	P(S)	5-21-13
4.20	Perform Boxline VE (BiD).	(P)S	5-21-13
4.21	Perform Boxline VE (DiD) using volume estimates and nominal densities.	(P)S	5-21-13
4.22	Perform RTR VE Update (RVU) for Prohibited Item removal (using volume estimates and nominal densities).	P(S)	5-21-13
4.23	Perform RVU for the final configuration of a Coring Drum.	P(S)	5-21-13
4.24	Perform RVU for the final configuration of a Treatment Drum.	P(S)	5-21-13
4.25	Perform an update of an NCR for Treatment or the removal of suspect / prohibited items.	P(S)	5-21-13

AMWTP Advanced Mixed Waste Treatment Project	*Advanced Mixed Waste Treatment Project* *REQUALIFICATION PACKAGE* *Visual Examiner*	QPVE0001 Rev. 4

Employee Name Shirley Perez S# 102313

5.0 Emergency / Abnormal Conditions

The elements below are to be simulated (S) or discussed (D) as indicated. If both S and D are indicated, then circle which one was used.

Sign-off by the SS indicates successful performance of the task. If the trainee cannot perform the task without coaching, terminate the Performance Assessment.

		P S D	SS Signature	Date
5.1	Fire / Alarm (OI-33, FOI-16, AOI-10, RS&C-6.12)	S (D)		05/21/13
5.2	Location of fire extinguishers / fire alarm boxes in WMF-634, 676, and 628.	S (D)		05/21/13
5.3	Dropped waste container (MP-EC&P-12.9)	S (D)		05/21/13
5.4	Breached Container (INST-OI-11; INST-FOI-20)	S (D)		05/21/13
5.5	CAM Alarm (OI-11, RS&C-6.12)	S (D)		05/21/13
5.6	Spill / Contamination Release (INST-OI-88)	S (D)		05/21/13
5.7	Injured Person (MP-ISIH-2.54, RS&C-6.12)	S (D)		05/21/13
5.8	Loss of ventilation/air system (OI-11, AOI-05, OI-16, OI-33)	S (D)		05/21/13
5.9	Loss of Commercial Power (AOI-04)	S (D)		05/21/13
5.10	Evacuation (EP&C-12.16)	S (D)		05/21/13
5.11	Take Cover (EP&C-12.16)	S (D)		05/21/13

AMWTP Advanced Mixed Waste Treatment Project	*Advanced Mixed Waste Treatment Project* *REQUALIFICATION PACKAGE* *Visual Examiner*	QPVE0001 Rev. 4

Employee Name Shirley Perez S# 102313

6.0 **Examinations** (Sections 1-5 must be complete prior to testing)	**NO TEST REQUIRED**

7.0 **Recommendation for Requalification**		
After discussion with the candidate concerning this job scope, the Visual Examination Expert (VEE) acknowledges that the trainee possesses the knowledge, skills, and abilities to perform this job function correctly the first time, safely and compliantly. In addition, the VEE has completed the quality validation of this document in accordance with the requirements in MP-DOCS-18.2. (Guidance is given in the Training/Evaluation Standard)		
Visual Examination Expert	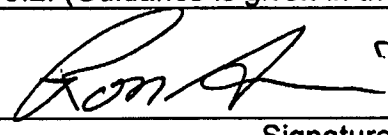	6-5-13
Title	Signature	Date

Upon satisfactory completion of this qualification package, the Characterization or Facility Production Manager may grant Re-Qualification to the trainee on the front cover of this re-qualification package.

AMWTP Advanced Mixed Waste Treatment Project	*Advanced Mixed Waste Treatment Project* **Addendum** **Visual Examiner**	Admin. Form AFQP051 for QPVE0001

Employee Name Shirley Perez S# 102313

Addendum Approval Section

Line Manager Approval	S. Peterman	Signature on File	10/25/12
	Print Name	Signature	Date

Training Manager Approval	Todd Golberg	Signature on File	10/30/12
	Print Name	Signature	Date

1.0 **New Training Requirements: For all currently qualified personnel and those currently working on Rev. 3 of QPVE0001, Visual Examiner.**

Manager assigned completion date for currently qualified employees: BB 8/1/14
Date/Initials

1.1 **Courses**	**Training rep. \ SS Signature**	**Date**
1.1.1 No new courses	N/A	N/A

1.2 **Required Reads**	**VEE Signature**	**Date**
1.2.1 RPT-TRUW-83, Acceptable Knowledge Summary for Supercompactor Debris Waste (BN510.1)	Ron [illegible]	8-4-14

2.0 OJT Training Objectives

TRAINING DEPT.
AUG 05 2014
Initials: CJ
8-6-14 CJ

AMWTP Advanced Mixed Waste Treatment Project	*Advanced Mixed Waste Treatment Project* ***Addendum Visual Examiner***	Admin. Form AFQP051 for QPVE0001

Employee Name Shirley Perez S# 10313

The elements below are to be performed (P), simulated (S), or discussed (D) as indicated. If there are two or more choices (P, S, or D), then circle which one was used.

Initials by the OJT Instructor indicate the Trainee is ready to be evaluated per MP-RTQP-14.13. Each training objective has been reviewed IAW with the Training/Evaluation Standard and the Trainee has a satisfactory understanding of how it pertains to his/her job responsibilities. It is noted that a successful practice cannot count as a successful OJT evaluation.

Sign-off by the Evaluator indicates successful performance of the task. If the trainee cannot perform the task without coaching, terminate the Performance Assessment.

NOTE: *Shift Supervisor (SS) will determine the appropriate OJT Training setting whether it will involve waste or be a mock-up setting.*

2.1 OJT Training	**P SD**	**OJT initials**	**Evaluator Signature**	**Date**
2.1.1 None	P	N/A	N/A	N/A

3.0 **Abnormal/Infrequent Operations**	**P S D**	**OJT instructor \ SS signature**	**Date**
3.1 No new elements in this section	S D	N/A	N/A

4.0 **Deletions from QPVE0001**
(Employees currently working on the addendum for this qualification package are not required to complete these items from rev. 3).
Delete INST-FOI-22 from list of required reads in section 3.0

5.0 **Completion Verification**		
SS verify training has been completed:	[signature]	8/4/14
	Signature	Date

AMWTP Advanced Mixed Waste Treatment Project	*Advanced Mixed Waste Treatment Project* **Addendum** **Visual Examiner**	Admin. Form AFQP051 for QPVE0001

Employee Name Shirley Perez S# 10231

Note: For currently qualified employees- Upon completion forward to training for entry into TRAIN and to be attached to the employee's qualification package.

For employees working on the initial qualification (QPVE0001)- attach this form to the qualification package.

Signature Roster

Personnel signing blocks in this qualification package must print their name legibly, sign and initial. Copy this sheet if necessary.

Name (Printed)	Signature	Initials
Ron Grise		RG
Shirley Perez		SJP
Shane Harey		SH

DIVIDER

PAGE

AMWTP Advanced Mixed Waste Treatment Project	*Advanced Mixed Waste Treatment Project* *REQUALIFICATION PACKAGE* *Visual Examiner*	QPVE0001 Rev. 4

Employee Name Nolan Jacobs S# 102040

VISUAL EXAMINER

Requalification Package Number: QPVE0001

The manager granting qualification acknowledges that the employee possesses the knowledge, skills, and abilities to perform this job function correctly the first time, safely and compliantly.

Qualification granted by:	Mark Henderson by delegation		12/23/13
Production Manager	Print Name	Signature	Date

Form-1268, Production System Access Request, has been submitted for the appropriate WTS role(s) for this individual.	Mark Henderson		1-6-14
	Print Name	Signature	Date

Required Attachments: Check box if attached	Remedial Form ☐ (If used)	Exception Form ☐ (If used)

Qual Pack Issued By :	Dave Butler		12/16/13
	Print Name	Signature	Date

Qualification Package Approval Section

Line Manager Approval	S. Peterman	Signature on file	10/2/2012
	Print Name	Signature	Date

Training Manager Approval	Todd Golberg	Signature on file	10/2/2012
	Print Name	Signature	Date

(R)

QC 1/6/14 cs

Employee Name NOLAN JACOBS S# 102040

Revision History			
Revision Number	Affected Pages	Description of Change	Date
0	All	Initial Issue. QPVE0001 was generated to replace QPOT4B and FQPOT10A. QPVEE0002 and QPVE0003 were generated as delta qualification for personnel who were current in QPOT4B and FQPOT10A.	05/30/07
1	All	Update the VE qual. pack to meet new WIPP 311 Permit Modifications. Retire QP-OT-4B Characterization VE; FQP-OT-10A Facility VE; QCCVEFVE Characterization Visual Examination Operators to qualify as Facility Visual Examination Operators; QPVE0002 Pre-Qualified Visual Examiner; and QPVE0003 Pre-Qualified Visual Examiner.	05/30/08
2	All	Revised JTAL to make more specific to VE tasks.	03/04/09
3	All	Made editorial changes. Updated format and incorporated evaluation standard.	3/29/10
4	All	Periodic review and update.	10/2/12

Mod Letter	Affected Pages	Description of Change	Management Approval *	Date

* Manager signature required for modifications.

AMWTP Advanced Mixed Waste Treatment Project	*Advanced Mixed Waste Treatment Project* *REQUALIFICATION PACKAGE* *Visual Examiner*	QPVE0001 Rev. 4

Employee Name NOLAN JACOBS S# 102040

Signature Roster

Personnel signing blocks in this qualification package must print their name legibly, sign and initial. Signature by Evaluators indicates they have used the Training/Evaluation Standard and performed evaluations IAW MP-RTQP-14.13. Copy this sheet if necessary.

Name (Printed)	Signature	Initials
Dave Butler		DB
Ron Grise		
Rick Hilbath		
Mark Henderson		MH

AMWTP Advanced Mixed Waste Treatment Project	*Advanced Mixed Waste Treatment Project* *REQUALIFICATION PACKAGE* *Visual Examiner*	QPVE0001 Rev. 4

Employee Name NOLAN JACOBS S# 102040

1.0 Scope

This requalification package assures the knowledge and skill requirements for personnel performing VE at AMWTP are maintained. This requalification is valid for 24 months, after which, another requalification checklist must be completed to maintain qualification status.

Individuals may be disqualified for any of the following: Extended absence, identified training expires, failure of recurring proficiency/performance exams, performance deficiencies, etc. as applicable.

2.0 Prerequisites

Ensure the trainee has successfully completed the requirements listed below before completing this requalification package.

The employee has completed all initial training *and is current* on the applicable qualifications / checklists listed on the ITP to support this qualification package.

[signature] by delegation 12/23/13
Employee's Production Manager Date

		Date Requirement Was Completed	**Signature** (Training Representative or SS)	Date
2.1	Completion of VE qualification (QPVE0001).	1-17-12	[signature]	12-16-13

Employee Name NOLAN JACOBS S# 107040

3.0 Initial & Continuing Training / Knowledge / Required Reading

The initial training courses identified pertain to the job function/duties and will be verified complete by the employee's SS, the VEE SME or Lead, or a Training Representative.

3.1 Training Courses (Indicate Courses that are Recurring):	Date Requirement was Complete	Recurring Training /Qualification Frequency
3.1.1 0AWT1118, LLW/MLLW Disposition Plan	01/27/12	24 months
VEE SME or Lead, Training Representative or SS verify training courses are complete:	Signature	12-21-13 Date

Sign-off by the VEE indicates that each required reading has been reviewed IAW with the Training/Evaluation Standard and that the Trainee demonstrates a satisfactory understanding of how it pertains to their job responsibilities.

3.2 Required Reading: Operating Instructions	VEE	Date
3.2.1 Discuss any recent changes to INST-OI-34 and INST-FOI-17.	Ron	12/20/13
3.3 Required Reading: Other Documents	**VEE**	**Date**
3.3.1 None	N/A	N/A

Sign-off by the OJT Instructor or SS indicates that each knowledge item has been reviewed IAW with the Training/Evaluation Standard and that the Trainee demonstrates a satisfactory understanding of how it pertains to their job responsibilities.

3.4 Knowledge:	VEE / SS Signature	Date
3.4.1 Discuss any lessons learned concerning Visual Examination.	Ron	12/20/13
3.4.2 Discuss the any applicable Criticality Working Requirements (CWRs).	Ron	12/20/13

Employee Name NOLAN JACOBS S# 102040

3.4 Knowledge:	VEE / SS Signature	Date

4.0 OJT Training Objectives

The elements below are to be performed (P), simulated (S), or discussed (D) as indicated. Circle all that apply.

Sign-off by the VEE (as the Evaluator) indicates successful performance of the task. If the trainee cannot perform the task without coaching, terminate the Performance Assessment.

VE Over-Train Performance Objectives		P S D	Evaluator Signature & date
4.1	Generate (enter) examination related data into WTS.	P (S)	12/20/13
4.2	Verify (concur with) examination-related data entered into WTS.	P (S)	12/20/13
4.3	Identify closure methods and layers of confinement.	P (S)	12/2013
4.4	Discuss how to ensure DQOs are met.	(D)	12/20/13
4.5	Identify packaging configurations.	P (S)	12/20/13
4.6	Assign proper Waste Material Parameters to waste.	P (S)	12/20/13
4.7	Perform weight and volume conversions using procedural aids.	P (S)	12/20/13
4.8	Assign the correct IDC and Waste Matrix Code during the VE process.	P (S)	12/20/13
4.9	Identify the path forward for prohibited and nonconforming items and the associated NCRs.	P (S)	12/20/13
4.10	Identify common and conditional waste items through VE or video.	P (S)	12/2013
4.11	Identify packaging and waste materials.	P (S)	12/20/13

Employee Name NOLAN JACOBS S# 1020410

VE Over-Train Performance Objectives	P S D	Evaluator Signature & date
4.12 Identify prohibited and suspect items through VE or video.	P(S)	12/20/13
4.13 Assign correct IDCs for newly generated secondary waste and compacted waste.	P(S)	12/20/13
4.14 Estimate volumes and nominal densities of waste.	P(S)	12/20/13
4.15 Identify rigid liner types and their status and condition.	P(S)	12/20/13
4.16 Identify filter models and update WTS for filter removal/insertion on the Container Filters screen.	P(S)	12/20/13
4.17 Perform Newly Generated Waste (NGW) package VE.	P(S)	12/20/13
4.18 Perform Newly Generated Waste Closure VE.	P(S)	12/20/13
4.19 Perform VE of Legacy Waste.	P(S)	12/20/13
4.20 Perform Boxline VE (BiD).	P(S)	12/20/13
4.21 Perform Boxline VE (DiD) using volume estimates and nominal densities.	P(S)	12/20/13
4.22 Perform RTR VE Update (RVU) for Prohibited Item removal (using volume estimates and nominal densities).	P(S)	12/20/13
4.23 Perform RVU for the final configuration of a Coring Drum.	P(S)	12/20/13
4.24 Perform RVU for the final configuration of a Treatment Drum.	P(S)	12/20/13
4.25 Perform an update of an NCR for Treatment or the removal of suspect / prohibited items.	P(S)	12/20/13

Employee Name NOLAN JACOBS S# 102010

5.0 Emergency / Abnormal Conditions

The elements below are to be simulated (S) or discussed (D) as indicated. If both S and D are indicated, then circle which one was used.

Sign-off by the SS indicates successful performance of the task. If the trainee cannot perform the task without coaching, terminate the Performance Assessment.

		P S D	SS Signature	Date
5.1	Fire / Alarm (OI-33, FOI-16, AOI-10, RS&C-6.12)	S (D)		12-20-13
5.2	Location of fire extinguishers / fire alarm boxes in WMF-634, 676, and 628.	S (D)		12-20-13
5.3	Dropped waste container (MP-EC&P-12.9)	S (D)		12-20-13
5.4	Breached Container (INST-OI-11; INST-FOI-20)	S (D)		12-20-13
5.5	CAM Alarm (OI-11, RS&C-6.12)	S (D)		12-20-13
5.6	Spill / Contamination Release (INST-OI-88)	S (D)		12-20-13
5.7	Injured Person (MP-ISIH-2.54, RS&C-6.12)	S (D)		12-20-13
5.8	Loss of ventilation/air system (OI-11, AOI-05, OI-16, OI-33)	S (D)		12-20-13
5.9	Loss of Commercial Power (AOI-04)	S (D)		12-20-13
5.10	Evacuation (EP&C-12.16)	S (D)		12-20-13
5.11	Take Cover (EP&C-12.16)	S (D)		12-20-13

Employee Name NOLAN JACOBS S# 102040

6.0 **Examinations** (Sections 1-5 must be complete prior to testing)	**NO TEST REQUIRED**

7.0 **Recommendation for Requalification**		
After discussion with the candidate concerning this job scope, the Visual Examination Expert (VEE) acknowledges that the trainee possesses the knowledge, skills, and abilities to perform this job function correctly the first time, safely and compliantly. In addition, the VEE has completed the quality validation of this document in accordance with the requirements in MP-DOCS-18.2. (Guidance is given in the Training/Evaluation Standard)		
Visual Examination Expert	Ronald A	12/21/13
Title	Signature	Date

Upon satisfactory completion of this qualification package, the Characterization or Facility Production Manager may grant Re-Qualification to the trainee on the front cover of this re-qualification package.

DIVIDER

PAGE

AMWTP Advanced Mixed Waste Treatment Project	*Advanced Mixed Waste Treatment Project* *REQUALIFICATION PACKAGE* *Visual Examiner*	**QPVE0001** **Rev. 4**

Employee Name Robert Purcell S# 109720

VISUAL EXAMINER

Requalification Package Number: QPVE0001

The manager granting qualification acknowledges that the employee possesses the knowledge, skills, and abilities to perform this job function correctly the first time, safely and compliantly.

Qualification granted by:	Jeremy Hampton		1-28-13
Production Manager	Print Name	Signature	Date

Form-1268, Production System Access Request, has been submitted for the appropriate WTS role(s) for this individual.			01/28/13
	Print Name	Signature	Date

Required Attachments: Check box if attached	Remedial Form ☐ (If used)	Exception Form ☐ (If used)

Qual Pack Issued By :	Cameron Stanford	Cameron Stanford	11-26-12
	Print Name	Signature	Date

TRAINING DEPT.
JAN 29 2013

Qualification Package Approval Section

Initials B

Line Manager Approval	S. Peterman	Signature on file	10/2/2012
	Print Name	Signature	Date

Training Manager Approval	Todd Golberg	Signature on file	10/2/2012
	Print Name	Signature	Date

JAN 30 A.M.
QC B

Employee Name Robert Purcell S# 109720

Revision History

Revision Number	Affected Pages	Description of Change	Date
0	All	Initial Issue. QPVE0001 was generated to replace QPOT4B and FQPOT10A. QPVEE0002 and QPVE0003 were generated as delta qualification for personnel who were current in QPOT4B and FQPOT10A.	05/30/07
1	All	Update the VE qual. pack to meet new WIPP 311 Permit Modifications. Retire QP-OT-4B Characterization VE; FQP-OT-10A Facility VE; QCCVEFVE Characterization Visual Examination Operators to qualify as Facility Visual Examination Operators; QPVE0002 Pre-Qualified Visual Examiner; and QPVE0003 Pre-Qualified Visual Examiner.	05/30/08
2	All	Revised JTAL to make more specific to VE tasks.	03/04/09
3	All	Made editorial changes. Updated format and incorporated evaluation standard.	3/29/10
4	All	Periodic review and update.	10/2/12

Mod Letter	Affected Pages	Description of Change	Management Approval *	Date

* Manager signature required for modifications.

AMWTP Advanced Mixed Waste Treatment Project	*Advanced Mixed Waste Treatment Project* *REQUALIFICATION PACKAGE* *Visual Examiner*	**QPVE0001** **Rev. 4**

Employee Name Robert Purcell S# 109720

Signature Roster
Personnel signing blocks in this qualification package must print their name legibly, sign and initial. Signature by Evaluators indicates they have used the Training/Evaluation Standard and performed evaluations IAW MP-RTQP-14.13. Copy this sheet if necessary.

Name (Printed)	Signature	Initials
Cameron Stamos	Cameron Stamos	CS
Brett Stacy		BS
Ron Grise		RG
Shane Haney		SH
Jeremy Hampton		JH
Nathan Hoffner		NH

AMWTP Advanced Mixed Waste Treatment Project	*Advanced Mixed Waste Treatment Project* *REQUALIFICATION PACKAGE* *Visual Examiner*	**QPVE0001** **Rev. 4**

Employee Name Robert Purcell S# 109220

1.0 Scope

This requalification package assures the knowledge and skill requirements for personnel performing VE at AMWTP are maintained. This requalification is valid for 24 months, after which, another requalification checklist must be completed to maintain qualification status.

Individuals may be disqualified for any of the following: Extended absence, identified training expires, failure of recurring proficiency/performance exams, performance deficiencies, etc. as applicable.

2.0 Prerequisites

Ensure the trainee has successfully completed the requirements listed below before completing this requalification package.

The employee has completed all initial training *and is current* on the applicable qualifications / checklists listed on the ITP to support this qualification package.

Employee's Production Manager — Date: 12/11/12

	Date Requirement Was Completed	Signature (Training Representative or SS)	Date
2.1 Completion of VE qualification (QPVE0001).	1-6-11	Cameron Stands	11-26-12

Employee Name Robert Purcell S# 109720

3.0 Initial & Continuing Training / Knowledge / Required Reading

The initial training courses identified pertain to the job function/duties and will be verified complete by the employee's SS, the VEE SME or Lead, or a Training Representative.

3.1 Training Courses (Indicate Courses that are Recurring):	Date Requirement was Complete	Recurring Training /Qualification Frequency
3.1.1 0AWT1118, LLW/MLLW Disposition Plan	3-24-12	24 months
VEE SME or Lead, Training Representative or SS verify training courses are complete: Signature		11-26-12 Date

Sign-off by the VEE indicates that each required reading has been reviewed IAW with the Training/Evaluation Standard and that the Trainee demonstrates a satisfactory understanding of how it pertains to their job responsibilities.

3.2 Required Reading: Operating Instructions	VEE	Date
3.2.1 Discuss any recent changes to INST-OI-34 and INST-FOI-17.		1-26-13
3.3 Required Reading: Other Documents	VEE	Date
3.3.1 None	N/A	N/A

Sign-off by the OJT Instructor or SS indicates that each knowledge item has been reviewed IAW with the Training/Evaluation Standard and that the Trainee demonstrates a satisfactory understanding of how it pertains to their job responsibilities.

3.4 Knowledge:	VEE / SS Signature	Date
3.4.1 Discuss any lessons learned concerning Visual Examination.		1-26-13
3.4.2 Discuss the any applicable Criticality Working Requirements (CWRs).		1-26-13

Employee Name Robert Purcell S# 109720

3.4 Knowledge:	VEE / SS Signature	Date

4.0 OJT Training Objectives

The elements below are to be performed (P), simulated (S), or discussed (D) as indicated. Circle all that apply.

Sign-off by the VEE (as the Evaluator) indicates successful performance of the task. If the trainee cannot perform the task without coaching, terminate the Performance Assessment.

VE Over-Train Performance Objectives		P S D	Evaluator Signature & date
4.1	Generate (enter) examination related data into WTS.	(P) S	1-26-13
4.2	Verify (concur with) examination-related data entered into WTS.	(P) S	1-26-13
4.3	Identify closure methods and layers of confinement.	(P) S	1-26-13
4.4	Discuss how to ensure DQOs are met.	(D)	1-26-13
4.5	Identify packaging configurations.	(P) S	1-26-13
4.6	Assign proper Waste Material Parameters to waste.	(P) S	1-26-13
4.7	Perform weight and volume conversions using procedural aids.	(P) S	1-26-13
4.8	Assign the correct IDC and Waste Matrix Code during the VE process.	(P) S	1-26-13
4.9	Identify the path forward for prohibited and nonconforming items and the associated NCRs.	(P) S	1-26-13
4.10	Identify common and conditional waste items through VE or video.	(P) S	1-26-13
4.11	Identify packaging and waste materials.	(P) S	1-26-13

AMWTP Advanced Mixed Waste Treatment Project	*Advanced Mixed Waste Treatment Project* *REQUALIFICATION PACKAGE* *Visual Examiner*	QPVE0001 Rev. 4

Employee Name Robert Purcell S# 109220

VE Over-Train Performance Objectives		PSD	Evaluator Signature & date
4.12	Identify prohibited and suspect items through VE or video.	(P) S	1-26-13
4.13	Assign correct IDCs for newly generated secondary waste and compacted waste.	(P) S	1-26-13
4.14	Estimate volumes and nominal densities of waste.	(P) S	1-26-13
4.15	Identify rigid liner types and their status and condition.	(P) S	1-26-13
4.16	Identify filter models and update WTS for filter removal/insertion on the Container Filters screen.	(P) S	1-26-13
4.17	Perform Newly Generated Waste (NGW) package VE.	(P) S	1-27-13
4.18	Perform Newly Generated Waste Closure VE.	(P) S	1-27-13
4.19	Perform VE of Legacy Waste.	P (S)	1-27-13
4.20	Perform Boxline VE (BiD).	(P) S	1-27-13
4.21	Perform Boxline VE (DiD) using volume estimates and nominal densities.	(P) S	1-27-13
4.22	Perform RTR VE Update (RVU) for Prohibited Item removal (using volume estimates and nominal densities).	(P) S	1-27-13
4.23	Perform RVU for the final configuration of a Coring Drum.	P (S)	1-27-13
4.24	Perform RVU for the final configuration of a Treatment Drum.	P (S)	1-27-13
4.25	Perform an update of an NCR for Treatment or the removal of suspect / prohibited items.	P (S)	1-27-13

AMWTP Advanced Mixed Waste Treatment Project	*Advanced Mixed Waste Treatment Project* *REQUALIFICATION PACKAGE* *Visual Examiner*	**QPVE0001** **Rev. 4**

Employee Name Robert Purcell S# 109720

5.0 ***Emergency / Abnormal Conditions***
The elements below are to be simulated (S) or discussed (D) as indicated. If both S and D are indicated, then circle which one was used. Sign-off by the SS indicates successful performance of the task. If the trainee cannot perform the task without coaching, terminate the Performance Assessment.

		P S D	SS Signature	Date
5.1	Fire / Alarm (OI-33, FOI-16, AOI-10, RS&C-6.12)	S(D)		01/27/13
5.2	Location of fire extinguishers / fire alarm boxes in WMF-634, 676, and 628.	S(D)		01/27/13
5.3	Dropped waste container (MP-EC&P-12.9)	S(D)		01/27/13
5.4	Breached Container (INST-OI-11; INST-FOI-20)	S(D)		01/27/13
5.5	CAM Alarm (OI-11, RS&C-6.12)	S(D)		01/27/13
5.6	Spill / Contamination Release (INST-OI-88)	S(D)		01/27/13
5.7	Injured Person (MP-ISIH-2.54, RS&C-6.12)	S(D)		01/27/13
5.8	Loss of ventilation/air system (OI-11, AOI-05, OI-16, OI-33)	S(D)		01/27/13
5.9	Loss of Commercial Power (AOI-04)	S(D)		01/27/13
5.10	Evacuation (EP&C-12.16)	S(D)		01/27/13
5.11	Take Cover (EP&C-12.16)	S(D)		01/27/13

Employee Name Robert Purcell S# 109720

6.0 **Examinations** (Sections 1-5 must be complete prior to testing)	**NO TEST REQUIRED**

7.0 **Recommendation for Requalification**		
After discussion with the candidate concerning this job scope, the Visual Examination Expert (VEE) acknowledges that the trainee possesses the knowledge, skills, and abilities to perform this job function correctly the first time, safely and compliantly. In addition, the VEE has completed the quality validation of this document in accordance with the requirements in MP-DOCS-18.2. (Guidance is given in the Training/Evaluation Standard)		
Visual Examination Expert	Ron A	1-27-13
Title	Signature	Date

Upon satisfactory completion of this qualification package, the Characterization or Facility Production Manager may grant Re-Qualification to the trainee on the front cover of this re-qualification package.

VE3

Idaho Treatment Group

Idaho Treatment Group, LLC • 850 Energy Drive, Suite 100 • Idaho Falls, ID 83401-1502 • t: 1.208.557.7301 • f: 1.208.557.0963

INFORMATION ONLY

To: Distribution

From: George Byram, TRU Programs Manager

Date: September 18, 2014

Re: Advanced Mixed Waste Treatment Project Visual Examination Designees – GTB-007-14

In accordance with the Waste Analysis Plan of the Waste Isolation Pilot Plant (WIPP) Hazardous Waste Facility Permit Section C1-4 and the WIPP Waste Acceptance Criteria Section G.2, the Advanced Mixed Waste Treatment Project (AMWTP) has designated the following individuals as Visual Examination Experts (VEEs) to provide overall direction and implementation of the visual examination activities on a daily basis:

- Lawrence J. Walker
- Ron Grise

The VEE selection was in accordance with AMWTP's qualification and training requirements specified in MP-RTQP-14.1, *Preparation and Administration of Individual Training Plans*, MP-TRUW-8.1, *Certification Plan for INL Transuranic Waste*, and MP-TRUW-8.2, *Quality Assurance Project Plan.* If you have any questions or comments, then please contact me at 208-557-6319.

GTB/GKT/at George Byram 9/18/14

Distribution:
Wes Bryan
Steve Carpenter
Ted Griffith
Ron Grise
Dave Haar
Rob Hamilton
Jim Jackson
Glen Johnson
Angie Morse
Wes Skaar
Charles Stepzinski
Gina Tedford
L.J. Walker
AMWTP Correspondence Control

DIVIDER

PAGE

AMWTP Advanced Mixed Waste Treatment Project	*Advanced Mixed Waste Treatment Project* *REQUALIFICATION PACKAGE* *Visual Examination Expert*	**QCVEE001** **Rev 1**

Employee Name L J WALKER S# 9D1454

Visual Examination Expert

Requalification Package Number: QCVEE001

The manager granting qualification acknowledges that the employee possesses the knowledge, skills, and abilities to perform this job function correctly the first time, safely and compliantly.

Qualification granted by: **Level I Validation Manager** Manager Title	George Byram Print Name	George Byram Signature	5/12/14 Date

Form-1268, Production System Access Request, has been submitted for the appropriate WTS role(s) for this individual.	L J WALKER / VEC Print Name/Title	L J Walker Signature	5/12/14 Date

Required Attachments: Check box if attached	Remedial Form ☐ (If used)	Exception Form ☐ (If used)

Qual Pack Issued By :	Amy Betzer Print Name	Amy Betzer Signature	4/16/14 Date

Qualification Package Approval Section

Line Manager Approval	Jim Jackson Print Name	Signature on file Signature	6//10 Date

TRAINING DEPT.
MAY 17 2014

Training Manager Approval	Ralph Hartline Print Name	Signature on file Signature	6/9/10 Date

Initials: _____

Employee Name LJ WALKER S# 901454

AMWTP Advanced Mixed Waste Treatment Project	*Advanced Mixed Waste Treatment Project* *REQUALIFICATION PACKAGE* *Visual Examination Expert*	**QCVEE001** **Rev 1**

Employee Name LJ WALKER S# 9D1454

Revision History

Revision Number	Affected Pages	Description of Change	Date
0	ALL	Initial Issue.	5-28-08
1	ALL	Update to new format; changes to reflect new task list.	6-30-10

Modification Record

Mod Letter	Affected Pages	Description of Change	Management Approval *	Date
A	All	Completed periodic Review	S. Peterman	8/20/12

* Manager signature required for modifications.

AMWTP Advanced Mixed Waste Treatment Project	*Advanced Mixed Waste Treatment Project* *REQUALIFICATION PACKAGE* *Visual Examination Expert*	**QCVEE001** **Rev 1**

Employee Name L J WALKER S# 901454

Signature Roster

Personnel signing blocks in this qualification package must print their name legibly, sign and initial. Signature by Evaluators indicates they have used the Training/Evaluation Standard and performed evaluations IAW MP-RTQP-14.13. Copy this sheet if necessary.

Name (Printed)	Signature	Initials
Amy Betzer	Amy Betz	AB
George Byram		
Ron Grise		
L J WALKER	L J Walk	LJW

AMWTP Advanced Mixed Waste Treatment Project	*Advanced Mixed Waste Treatment Project* *REQUALIFICATION PACKAGE* *Visual Examination Expert*	**QCVEE001** **Rev 1**

Employee Name LJ WALKER S# 901454

1.0 Scope

This qualification checklist has been developed in order to requalifiy individuals acting as Visual Examination Experts at AMWTP.

The employee's management will assign a target date for completion of this checklist not to exceed six months. TRU Programs Management may decide the path forward if the individual has not completed the checklist by the target date.

The individual may be disqualified for any of the following: extended absence, identified training expires, failure of recurring proficiency/performance exams, performance deficiencies, etc.

2.0 Prerequisites

Ensure the trainee has successfully completed the requirements listed below before completing this qualification checklist.

The employees Individual Training Plan (ITP), Form-1020, is current, or has been updated, to include the appropriate RCRA Profile and all courses required for personnel performing tasks in the capacity of a VEE Lead.

Checklist completion target date:	Level I Validation Manager	Date
	Gary B	4/23/14

	Date Requirement Was Completed	**Signature** (Training Representative or VEE Lead)	**Date**
2.1 Completion of QCVEE001	5/30/12	Amy Beth	4/16/14

3.0 Initial & Continuing Training / Knowledge / Required Reading

The initial training courses identified pertain to the job function/duties and will be verified complete by the VEE SME, VEE Lead, or a Training Representative.

3.1 Training Courses (Indicate Courses that are Recurring):	Date Requirement was Complete	Recurring Training /Qualification Frequency
None required for requalification	N/A	N/A

Employee Name L J WALKER S# 901454

Sign-off by the VEE Lead or SME indicates that the Trainee demonstrates a satisfactory understanding of how the following required reads pertain to their job responsibilities.

3.2 **Required Reading: Operating Instructions**	**VEE Lead or SME**	**Date**
3.2.1 Discuss any changes to procedures that may affect VEE activities.	Ron A	4-24-14

3.3 **Required Reading: Other Documents**	**VEE Lead or SME**	**Date**
3.3.1 Discuss any changes to the DSA, TSRs, or WIPP WAC that may affect VEE activities.	Ron A	4-24-14

Sign-off by the VEE Lead or SME indicates that each knowledge item has been reviewed and that the Trainee demonstrates a satisfactory understanding of how it pertains to their job responsibilities

3.4 **Knowledge:**	**VEE Lead or SME**	**Date**
3.4.1 Discuss any lessons learned concerning Visual Examination.	Ron A	4-24-14

4.0 OJT Training Objectives

The elements below are to be performed (P), simulated (S), or discussed (D) as indicated. If there are two or more choices (P, S, or D), then circle all that apply.
Sign-off by the VEE (as the Evaluator) indicates successful performance of the task. If the trainee cannot perform the task without coaching, terminate the Performance Assessment.

	P S D	**Evaluator Signature & date**
4.1 VEE Continuing Training Objectives		
4.1.1 Estimate and discuss Volumes and Nominal Densities through video or VE.	P (S)	Ron A 4-24-14
4.1.2 Perform volume and weight conversions.	P (S)	Ron A 4-24-14
4.1.3 Discuss conditions where a VE cannot be performed.	(D)	Ron A 4-24-14
4.1.4 Discuss the conditions under which a VEE would need to change or override data in WTS.	(D)	Ron A 4-24-14

Employee Name LJ WALKER S# 901454

5.0 *Emergency / Abnormal Conditions*

The elements below are to be simulated (S) or discussed (D) as indicated. If both S and D are indicated, then circle which one was used.

Initials by the VEE Lead or SME indicate that the Trainee is ready to be evaluated per MP-RTQP-14.13. The Trainee has a satisfactory understanding of how it pertains to his/her job responsibilities. It is noted that a successful practice cannot count as a successful OJT evaluation.

Sign-off by the evaluator indicates successful performance of the task. If the trainee cannot simulate or discuss the task without coaching, terminate the Performance Assessment.

	S D	VEE Lead or SME	Evaluator Signature	Date
5.1 Evacuation (MP-EP&C-12.7)	S (D)			4-24-14
5.2 Take Cover (MP-EP&C-12.7)	S (D)			4-24-14

6.0 **Examinations** (Sections 1-5 must be complete prior to testing) **NO EXAM REQUIRED**

7.0 **Recommendation for Qualification**

After discussion with the candidate concerning this job scope, the Visual Examination Expert Lead or SME acknowledges that the trainee possesses the knowledge, skills, and abilities to perform this job function correctly the first time, safely and compliantly.

In addition, the individual recommending qualification of the candidate has completed the quality validation of this document in accordance with the requirements in MP-DOCS-18.2. (Guidance is given in the Training/Evaluation Standard)

VEE Lead or SME		4-24-14
Title	Signature	Date

Upon satisfactory completion of this qualification package, the Level I Validation Manager may grant Qualification to the trainee on the front cover of this qualification package.

DIVIDER

PAGE

AMWTP Advanced Mixed Waste Treatment Project	*Advanced Mixed Waste Treatment Project* *QUALIFICATION PACKAGE* *Visual Examination Expert Lead*	**QCVEELEA** **Rev 2**

Employee Name L. J. Walker S# 901454

Visual Examination Expert Lead

Qualification Package Number: QCVEELEA

The manager granting qualification acknowledges that the employee possesses the knowledge, skills, and abilities to perform this job function correctly the first time, safely and compliantly.

Qualification granted by: **Level I Validation Manager** Manager Title	George Byram Print Name	Geo. R Signature	5/28/14 Date

Form-1268, Production System Access Request, has been submitted for the appropriate WTS role(s) for this individual.	LJ WALKER/VEE Print Name/Title	LJ Walker Signature	5/28/14 Date

Required Attachments: Check box if attached	Remedial Form ☐ (If used) Exception Form ☐ (If used)

Qual Pack Issued By :	Amy Betzer Print Name	Amy Betzer Signature	5/12/14 Date

Qualification Package Approval Section

Line Manager Approval	Sue Peterman Print Name	Signature on File Signature	12/3/12 Date

Training Manager Approval	Todd Golberg Print Name	Signature on File Signature	12/3/12 Date

5-29-14
TRAINING DEPT.
MAY 29 2014
Initials:

AMWTP Advanced Mixed Waste Treatment Project	*Advanced Mixed Waste Treatment Project* *QUALIFICATION PACKAGE* *Visual Examination Expert Lead*	**QCVEELEA** **Rev 2**

Employee Name L J WALKER S# 901454

Revision History

Revision Number	Affected Pages	Description of Change	Date
0	ALL	Initial Issue. This qualification checklist replaces TCVEEXPT and QCWPVEE. The VEE has DOE O 5480.20A Technician education & experience requirements, which are different from the VEE Lead, which is a Tech Staff position. VEE Leads are qualified by QCVEELEA qualification checklist.	5/28/12
1	ALL	Deleted old 3.2.1; Justification: Documents listed in Sec. 3.2 comprise the sum of 3.2.1. Old - Corrected 3.2 document titles and added two documents. Adjusted Section 3 to reflect read/review instructions for required reading. Made editorial corrections. Update to new format. Implemented Training/Evaluation Standard as applicable.	6/9/10
2	All	Periodic review; Add RPT-TRUW-83 to required reads; add 0AWT2309 to list of courses.	12/3/12

Modification Record

Mod Letter	Affected Pages	Description of Change	Management Approval *	Date

* Manager signature required for modifications.

AMWTP Advanced Mixed Waste Treatment Project	*Advanced Mixed Waste Treatment Project* *QUALIFICATION PACKAGE* *Visual Examination Expert Lead*	**QCVEELEA** **Rev 2**

Employee Name LJ WALKER S# 9D1454

Signature Roster

Personnel signing blocks in this qualification package must print their name legibly, sign and initial. Signature by Evaluators indicates they have used the Training/Evaluation Standard and performed evaluations IAW MP-RTQP-14.13. Copy this sheet if necessary.

Name (Printed)	Signature	Initials
Amy Betzer	Amy Betzer	AB
George Byram	George Byram	GB
LJ WALKER	LJ Walker	LJW
Ron Grise	Ron Grise	RG

AMWTP Advanced Mixed Waste Treatment Project	*Advanced Mixed Waste Treatment Project* *QUALIFICATION PACKAGE* *Visual Examination Expert Lead*	**QCVEELEA** **Rev 2**

Employee Name LJ WALKER S# 901454

1.0 **Scope**
The QAPjP, MP-TRUW-8.2, identifies the Visual Examination Expert (VEE) Lead, as a qualified position, and requires requalification every two years. The VEE Lead will be familiar with the waste generating processes that have taken place at the AMWTP and will also be familiar with all types of waste being characterized at the AMWTP. The VEE Lead is responsible for the overall direction and implementation of the VE at the AMWTP. This individual is selected based on experience and training in the types of waste being characterized, and receives training in the same elements as the VE personnel with both formal training and OJT. Qualification of a VEE Lead is based on familiarity with waste generating processes and familiarity with the types of waste being characterized. The VEE Lead will access HWMA/RCRA areas to provide direction to Visual Examiners and Operations Management concerning Visual Examination (VE) events and has the authority to set task lists and disposition codes in WTS. The VEE will also perform classroom and OJT instruction/performance assessment. The VEE may be disqualified if any of the following conditions exist: Extended absence, identified training expires, failure to maintain Hazwoper Refresher training, performance deficiencies. Refer to MP-RTQP-14.4, Personnel Qualification and Certification.

AMWTP Advanced Mixed Waste Treatment Project	*Advanced Mixed Waste Treatment Project* *QUALIFICATION PACKAGE* *Visual Examination Expert Lead*	**QCVEELEA** **Rev 2**

Employee Name LJ WALKER S# 901454

2.0 **Prerequisites**
Ensure the trainee has successfully completed the requirements listed below before completing this qualification checklist.
The Employee Position Description (EPD), Form-1018 has been reviewed or a new one completed to ensure the duties of this position are included and to verify the education and experience requirements have been satisfied. (MP-RTQP-14.1). The employees Individual Training Plan (ITP), Form-1020, is current, or has been updated, to include the appropriate RCRA Profile and all courses required for personnel performing tasks in the capacity of a VEE Lead. The employee has completed all initial training *and is current* on the applicable qualifications / checklists listed on the ITP to support this qualification checklist. George Byram — Level I Validation Manager — 5/14/14 — Date

	Date Requirement Was Completed	**Signature** (Training Representative or SS)	**Date**
2.1 None	N/A	N/A	N/A

Employee Name LJ WALKER S# 901454

3.0 Initial & Continuing Training / Knowledge / Required Reading

The initial training courses identified pertain to the job function/duties and will be verified complete by the VEE SME or Lead, or a Training Representative.

3.1 Training Courses (Indicate Courses that are Recurring):	Date Requirement was Complete	Recurring Training /Qualification Frequency
3.1.1 0AWT1118, Nevada Test Site WAC (CBT)	3/16/14	24 months
3.1.2 0AWT2309, Safety Basis	2/25/12	0 months/initial
3.1.3 0AW T3141, Visual Examination Indoctrination	2/18/08	0 months/initial
3.1.4 0AW T3142, Visual Examination	9/10/12	0 months/initial
3.1.5 0AW T3143, WTS & DQOs	9/11/12	0 months/initial
3.1.6 0AWT4138C, Trackwise Training	9/16/10	0 months/initial

Training Representative or a qualified **VEE Lead** verify initial training courses are complete:	Amy Batty Signature	5/12/14 Date

Sign-off by the VEE indicates that each required reading has been reviewed IAW with the Training/Evaluation Standard and that the Trainee demonstrates a satisfactory understanding of how it pertains to their job responsibilities.

3.2 Required Reading: Operating Instructions	VEE SME or Lead	Date
3.2.1 INST-OI-16 Drum Coring (For familiarity)		5/19/14
3.2.2 INST-OI-73 Manual Drum Coring *(For familiarity)*		5/19/14

Employee Name LJ WALKER S# 9D14554

3.2.3 INST-OI-12 RTR Ops (Drum) (Initial – for familiarity)		5/18/14
3.2.4 INST-OI-41 RTR Ops (Box) (For familiarity)		5/18/14
3.2.5 INST-OI-60 RTR Ops (Quick Scan) *(For familiarity)*		5/18/14
3.2.6 INST-OI-81 RTR Ops (WIPP Cert for Boxes) *(For familiarity)*		5/18/14
3.2.7 INST-FOI-21, Drummed Waste Handling Operations *(For familiarity)*		5/19/14
3.2.8 INST-FOI-23 SCW Ops. (For familiarity)		5/19/14
3.2.9 INST-FOI-25 SCW PAM Ops (For familiarity)		5/19/14
3.2.10 INST-FOI-16 Box Line Ops (For familiarity)		5/18/14
3.2.11 INST OI-11 Waste Container Handling *(For familiarity)*		5/18/14
3.2.12 INST-OI-23 Soil Removal Ops *(For familiarity)*		5/19/14
3.2.13 INST-OI-24, Waste Packaging		5/18/14
3.2.14 INST-OI-68 Drum Treatment Facility Ops *(For familiarity)*		5/22/14
3.2.15 INST-OI-34 Non-Facility Visual Examination Ops		5/18/14
3.2.16 INST-FOI-17 Facility Visual Examination Ops		5/18/14
3.2.17 INST-OI-75, Container-in-Container Sampling *(For familiarity)*		5/22/14

Employee Name L J WALKER S# 901454

3.3 Required Reading: Other Documents	VEE SME or Lead	Date
3.3.1 RPT-DSA-02, for Operations Chapters 4 & 5		5/20/14
3.3.2 MP-Q&SI-5.3, Corrective Action		5/20/14
3.3.3 MP-Q&SI-5.4, Identification of Nonconforming Conditions		5/20/14
3.3.4 MP-TRUW-8.1, Certification Plan for INL Transuranic Waste		5/20/14
3.3.5 MP-TRUW-8.2; Quality Assurance Project Plan (QAPjP)		5/20/14
3.3.6 MP-TRUW-8.5, TRU Waste Certification *(For familiarity)*		5/20/14
3.3.7 MP-TRUW-8.8, Level I Validation		5/20/14
3.3.8 MP-TRUW-8.13, Collection, Review, Confirmation, & Management of AK Documentation *(For familiarity)*		5/17/14
3.3.9 RPT-TRUW-04, Acceptable Knowledge Document for the Battelle Columbus Laboratories Building JN-4 Plutonium Laboratory *(For familiarity)*		5/17/14
3.3.10 RPT-TRUW-05, AMWTP Waste Matrix Code Reference Manual		5/17/14
3.3.11 RPT-TRUW-06, AMWTP TRU Waste Management Acceptable Knowledge Elements *(For familiarity)*		5/17/14
3.3.12 RPT-TRUW-09, Acceptable Knowledge Summary for First/Second Stage Sludge *(For familiarity)*		5/17/14
3.3.13 RPT-TRUW -12, AMWTP Waste Stream Designations		5/17/14

Employee Name LJ WALKER S# 9D1454

3.3.14 RPT-TRUW-13, Acceptable knowledge document for INL stored transuranic waste-Mound Plant Waste *(For familiarity)*		5/17/14
3.3.15 RPT-TRUW-15, Acceptable Knowledge Summary for Building 374 Sludge *(For familiarity)*		5/25/14
3.3.16 RPT-TRUW-23, Acceptable Knowledge Summary for solidified Acid/Caustic Waste (BN835) *(For familiarity)*		5/25/14
3.3.17 RPT-TRUW-30, Acceptable Knowledge Summary for Supercompactor Debris Waste (BN510) *(For familiarity)*		5/25/14
3.3.18 RPT-TRUW-44, Acceptable Knowledge Summary for Non Special Metal (BN296) *(For familiarity)*		5/25/14
3.3.19 RPT-TRUW-46, Acceptable Knowledge Summary for Glass Debris Waste (BN243) *(For familiarity)*		5/25/14
3.3.20 RPT-TRUW-48, Acceptable Knowledge Summary for Leaded Rubber Debris Waste (BN252) *(For familiarity)*		5/25/14
3.3.21 RPT-TRUW-52, Acceptable Knowledge Summary for Firebrick Debris Waste (BN161) *(For familiarity)*		5/25/14
3.3.22 RPT-TRUW-53, Acceptable Knowledge Summary for Mound Debris Waste (BN304) *(For familiarity)*		5/25/14
3.3.23 RPT-TRUW-56, Acceptable Knowledge Document for INL Stored Transuranic Waste – Rocky Flats Plant *(For familiarity)*		5/25/14
3.3.24 RPT-TRUW-59, Acceptable Knowledge Summary for Special Setups Waste (BN004)		5/25/14
3.3.25 RPT-TRUW-63, Acceptable Knowledge Summary for Cemented Sludge (BN836) *(For familiarity)*		5/25/14

Employee Name L J WALKER S# 9D1454

3.3.26 RPT-TRUW-83, Acceptable Knowledge Summary for Supercompacted Debris Waste (BN510.1)		5/24/14
3.3.27 CCP-PO-003, CCP Transuranic Waste Authorized Methods for Payload Control (CCP CH-TRAMPAC)		5/24/14
3.3.28 DOE/ NV-325, Nevada Test Site Waste Acceptance Criteria *(For familiarity)*		5/24/14
3.3.29 INEL-96/0280, Acceptable Knowledge (AK) Document for INEEL Stored Transuranic Waste – Rocky Flats Plant *(For familiarity)*		5/24/14
3.3.30 NM4890139088, WIPP Hazardous Waste Permit Waste Analysis Plan *(Review changes – for impacts on VE)*		5/24/14
3.3.31 DOE/WIPP-02-3122, Contact-Handled Waste Acceptance Criteria for the Waste Isolation Pilot Plant (CH-WAC) *(Review changes – for impacts on VE)*		5/24/14
3.3.32 DOE/CBFO-94-1012, Quality Assurance Program Document (Initial – for familiarity)		5/24/14
3.3.33 40 CFR 260 to 265, and 268, RCRA Regulations associated with solid and hazardous waste determinations *(For familiarity)*		5/24/14

Sign-off by the VEE or SS indicates that each knowledge item has been reviewed and that the Trainee demonstrates a satisfactory understanding of how it pertains to their job responsibilities.

3.4 Knowledge	VEE SME or Lead	Date
3.4.1 Discuss the DSA and Safety Basis and how they apply to tasks covered in this qualification checklist.		5-27-14
3.4.2 Discuss ISIH and how it applies to tasks covered in this qualification checklist.		5-27-14

Employee Name L J WALKER S# 901454

3.4.3	Discuss ISMS and how it applies to tasks covered in this qualification checklist.		5-27-14
3.4.4	Discuss Conduct of Operations and how it applies to tasks covered in this qualification checklist.		5-27-14
3.4.5	Discuss Criticality Safety and how it applies to tasks covered in this qualification checklist.		5-27-14
3.4.6	Discuss the overall responsibilities of the VEE Lead.		5-27-14

4.0 OJT Training Objectives

The elements below are to be performed (P), simulated (S), or discussed (D) as indicated. If there are two or more choices (P, S, or D), then circle all that apply.

Initials by the VEE indicate that the Trainee is ready to be evaluated per MP-RTQP-14.13. The Trainee has a satisfactory understanding of how it pertains to his/her job responsibilities. It is noted that a successful practice cannot count as a successful OJT evaluation.

Sign-off by the VEE (as the Evaluator) indicates successful performance of the task. If the trainee cannot perform the task without coaching, terminate the Performance Assessment.

	P S D	VEE SME or Lead Initials	Evaluator Signature & date
4.1 VEE Lead Performance Objectives			
4.1.1 Discuss how to ensure that VE Characterization process data validation/certification is accomplished in accordance with requirements.	(D)		5-27-14
4.1.2 Discuss and locate waste material parameters and descriptions.	(D)		5-27-14
4.1.3 Discuss and identify closure method and layers of confinement through video or VE.	P(S)		5-27-14
4.1.4 Identify filter models.	P(S)		5-27-14

Employee Name LJ WALKER S# 9D1454

4.1.5	Identify rigid liner types and status/condition.	P(S)	5-27-14
4.1.6	Discuss and identify waste drum configurations through video or VE.	P(S)	5-27-14
4.1.7	Discuss and identify packaging and waste materials through video or VE.	P(S)	5-27-14
4.1.8	Discuss and estimate Volumes and Nominal Densities through video or VE.	P(S)	5-27-14
4.1.9	Identify common and conditional items in waste through video or VE.	P(S)	5-27-14
4.1.10	Identify prohibited, suspect, or inconclusive items in waste through video or VE.	P(S)	5-27-14
4.1.11	Discuss and assign waste-to-waste material parameter categories.	P(S)	5-27-14
4.1.12	Discuss and assign Waste Matrix Codes.	P(S)	5-27-14
4.1.13	Identify and discuss IDCs for newly generated secondary waste and compacted waste.	P(S)	5-27-14
4.1.14	Perform volume and weight conversions.	P(S)	5-27-14
4.1.15	Generate (enter) and verify (concur with) examination-related data in WTS.	P(S)	5-27-14
4.1.16	Discuss Audio/Video equipment available, and the requirements associated with their use.	(D)	5-27-14
4.1.17	Define Data Quality Objectives (DQOs) for the VE program.	(D)	5-27-14
4.1.18	Discuss conditions where a complete VE cannot be performed.	(D)	5-27-14
4.1.19	Discuss integration of RTR/VE Update (RVU) with the original analysis and the Batch Data Report.	(D)	5-27-14

Employee Name L J WALKER S# 901454

	PSD	VEE Initials	Evaluator Signature & date
4.1.20 Discuss the Data Review and Validation Process.	(D)		5-22-14
4.1.21 Discuss the actions to be taken if assistance is required by operations to identify material in a breached container event in buildings WMF-628, 634, 635, and 676.	(D)		5-22-14
4.1.22 Demonstrate the ability to change or override data in WTS.	P (S)		5-22-14

5.0 *Emergency / Abnormal Conditions*

The elements below are to be simulated (S) or discussed (D) as indicated. If both S and D are indicated, then circle which one was used.

Initials by the VEE indicate that the Trainee is ready to be evaluated per MP-RTQP-14.13. The Trainee has a satisfactory understanding of how it pertains to his/her job responsibilities. It is noted that a successful practice cannot count as a successful OJT evaluation.

Sign-off by the evaluator indicates successful performance of the task. If the trainee cannot simulate or discuss the task without coaching, terminate the Performance Assessment.

		SD	Evaluator Signature	Date
5.1	Fire / Alarm	S(D)		5-22-14
5.2	Location of fire extinguishers / fire alarm boxes	S(D)		5-22-14
5.3	Dropped waste container	S(D)		5-22-14
5.4	Breached Container	S(D)		5-22-14
5.5	CAM Alarm	S(D)		5-22-14

AMWTP Advanced Mixed Waste Treatment Project	*Advanced Mixed Waste Treatment Project* *QUALIFICATION PACKAGE* *Visual Examination Expert Lead*	**QCVEELEA** **Rev 2**

Employee Name L J WALKER S# 901454

		S D	Evaluator Signature	Date
5.6	Spill / Contamination Release (MP-EC&P-7.10)	S D		5-27-14
5.7	Injured Person	S D		5-27-14
5.8	Loss of ventilation/air system	S D		5-27-14
5.9	Loss of Commercial Power	S D		5-27-14
5.10	Evacuation (MP-EP&C-12.16)	S D		5-27-14
5.11	Take Cover (MP-EP&C-12.16)	S D		5-27-14

6.0	**Examinations** (Sections 1-5 must be complete prior to testing)	**NO EXAM REQUIRED**

7.0 **Recommendation for Qualification**		
After discussion with the candidate concerning this job scope, the Visual Examination Expert SME or Lead acknowledges that the trainee possesses the knowledge, skills, and abilities to perform this job function correctly the first time, safely and compliantly. In addition, the individual recommending qualification of the candidate has completed the quality validation of this document in accordance with the requirements in MP-DOCS-18.2. (Guidance is given in the Training/Evaluation Standard)		
VEE Lead or SME Title	 Signature	5-27-14 Date

Upon satisfactory completion of this qualification package, the Level I Validation Manager may grant Qualification to the trainee on the front cover of this qualification package.

DIVIDER

PAGE

AMWTP Advanced Mixed Waste Treatment Project	Advanced Mixed Waste Treatment Project REQUALIFICATION PACKAGE Visual Examination Expert	QCVEE001 Rev 1

Employee Name Ron Grise S# 103914

Visual Examination Expert

Requalification Package Number: QCVEE001

The manager granting qualification acknowledges that the employee possesses the knowledge, skills, and abilities to perform this job function correctly the first time, safely and compliantly.

Qualification granted by: **Level I Validation Manager**	George Byram	George Byram	4/3/13
Manager Title	Print Name	Signature	Date

Form-1268, Production System Access Request, has been submitted for the appropriate WTS role(s) for this individual.			
	Print Name/Title	Signature	Date

Required Attachments: Check box if attached	Remedial Form ☐ (If used)	Exception Form ☐ (If used)

Qual Pack Issued By :	Holly Clark	Holly Clark	3/18/13
	Print Name	Signature	Date

Qualification Package Approval Section

Line Manager Approval	Jim Jackson	Signature on file	6//10
	Print Name	Signature	Date

Training Manager Approval	Ralph Hartline	Signature on file	6/9/10
	Print Name	Signature	Date

TRAINING DEPT
APR 03 2013

4-4-13

Initials CK

Employee Name Ron Grise S# 103914

AMWTP Advanced Mixed Waste Treatment Project	*Advanced Mixed Waste Treatment Project* *REQUALIFICATION PACKAGE* *Visual Examination Expert*	**QCVEE001** **Rev 1**

Employee Name Ron Grise S# 103914

Revision History

Revision Number	Affected Pages	Description of Change	Date
0	ALL	Initial Issue.	5-28-08
1	ALL	Update to new format; changes to reflect new task list.	6-30-10

Modification Record

Mod Letter	Affected Pages	Description of Change	Management Approval *	Date
A	All	Completed periodic Review	S. Peterman	8/20/12

* Manager signature required for modifications.

AMWTP Advanced Mixed Waste Treatment Project	*Advanced Mixed Waste Treatment Project* *REQUALIFICATION PACKAGE* *Visual Examination Expert*	**QCVEE001** **Rev 1**

Employee Name Ron Grise S# 103914

Signature Roster
Personnel signing blocks in this qualification package must print their name legibly, sign and initial. Signature by Evaluators indicates they have used the Training/Evaluation Standard and performed evaluations IAW MP-RTQP-14.13. Copy this sheet if necessary.

Name (Printed)	Signature	Initials
Holly Clark	Holly Clark	HC
SM Peterman	SM Peterman	SMP
David J. Preston	David J Preston	DJP
George Byram	George Byram	GB

AMWTP Advanced Mixed Waste Treatment Project	*Advanced Mixed Waste Treatment Project* *REQUALIFICATION PACKAGE* *Visual Examination Expert*	**QCVEE001** **Rev 1**

Employee Name Ron Grise S# 103914

1.0 Scope

This qualification checklist has been developed in order to requalifiy individuals acting as Visual Examination Experts at AMWTP.

The employee's management will assign a target date for completion of this checklist not to exceed six months. TRU Programs Management may decide the path forward if the individual has not completed the checklist by the target date.

The individual may be disqualified for any of the following: extended absence, identified training expires, failure of recurring proficiency/performance exams, performance deficiencies, etc.

2.0 Prerequisites

Ensure the trainee has successfully completed the requirements listed below before completing this qualification checklist.

The employees Individual Training Plan (ITP), Form-1020, is current, or has been updated, to include the appropriate RCRA Profile and all courses required for personnel performing tasks in the capacity of a VEE Lead.

Checklist completion target date:	Level I Validation Manager	Date
		3/18/13

	Date Requirement Was Completed	**Signature** (Training Representative or VEE Lead)	**Date**
2.1 Completion of QCVEE001	5/12/11 2-05-13 HC 3/18/13	Holly C. Clark	3/18/13

3.0 Initial & Continuing Training / Knowledge / Required Reading

The initial training courses identified pertain to the job function/duties and will be verified complete by the VEE SME, VEE Lead, or a Training Representative.

3.1 Training Courses (Indicate Courses that are Recurring):	Date Requirement was Complete	Recurring Training /Qualification Frequency
None required for requalification	N/A	N/A

Employee Name Ron Grise S# 1039141

Sign-off by the VEE Lead or SME indicates that the Trainee demonstrates a satisfactory understanding of how the following required reads pertain to their job responsibilities.

3.2 **Required Reading: Operating Instructions**	**VEE Lead or SME**	**Date**
3.2.1 Discuss any changes to procedures that may affect VEE activities.	David J Dexter	3/26/13

3.3 **Required Reading: Other Documents**	**VEE Lead or SME**	**Date**
3.3.1 Discuss any changes to the DSA, TSRs, or WIPP WAC that may affect VEE activities.	David J Dexter	3/26/13

Sign-off by the VEE Lead or SME indicates that each knowledge item has been reviewed and that the Trainee demonstrates a satisfactory understanding of how it pertains to their job responsibilities

3.4 **Knowledge:**	**VEE Lead or SME**	**Date**
3.4.1 Discuss any lessons learned concerning Visual Examination.	David J Dexter	3/26/13

4.0 OJT Training Objectives

The elements below are to be performed (P), simulated (S), or discussed (D) as indicated. If there are two or more choices (P, S, or D), then circle all that apply.
Sign-off by the VEE (as the Evaluator) indicates successful performance of the task. If the trainee cannot perform the task without coaching, terminate the Performance Assessment.

	P S D	**Evaluator Signature & date**
4.1 VEE Continuing Training Objectives		
4.1.1 Estimate and discuss Volumes and Nominal Densities through video or VE.	(P) S	David J Dexter 3/26/13
4.1.2 Perform volume and weight conversions.	(P) S	David J Dexter 3/26/13
4.1.3 Discuss conditions where a VE cannot be performed.	(D)	David J Dexter 3/26/13
4.1.4 Discuss the conditions under which a VEE would need to change or override data in WTS.	(D)	David J Dexter 3/26/13

AMWTP Advanced Mixed Waste Treatment Project	*Advanced Mixed Waste Treatment Project* *REQUALIFICATION PACKAGE* *Visual Examination Expert*	**QCVEE001** **Rev 1**

Employee Name Ron Grise S# 103914

5.0 *Emergency / Abnormal Conditions*

The elements below are to be simulated (S) or discussed (D) as indicated. If both S and D are indicated, then circle which one was used.

Initials by the VEE Lead or SME indicate that the Trainee is ready to be evaluated per MP-RTQP-14.13. The Trainee has a satisfactory understanding of how it pertains to his/her job responsibilities. It is noted that a successful practice cannot count as a successful OJT evaluation.

Sign-off by the evaluator indicates successful performance of the task. If the trainee cannot simulate or discuss the task without coaching, terminate the Performance Assessment.

	S D	VEE Lead or SME	Evaluator Signature	Date
5.1 Evacuation (MP-EP&C-12.7)	S (D)	DP	David J Deaton	3/26/13
5.2 Take Cover (MP-EP&C-12.7)	S (D)	DP	David J Deaton	3/26/13

6.0 **Examinations** (Sections 1-5 must be complete prior to testing) **NO EXAM REQUIRED**

7.0 **Recommendation for Qualification**

After discussion with the candidate concerning this job scope, the Visual Examination Expert Lead or SME acknowledges that the trainee possesses the knowledge, skills, and abilities to perform this job function correctly the first time, safely and compliantly.

In addition, the individual recommending qualification of the candidate has completed the quality validation of this document in accordance with the requirements in MP-DOCS-18.2. (Guidance is given in the Training/Evaluation Standard)

VEE Lead or SME Title	David J Deaton Signature	3/26/13 Date

Upon satisfactory completion of this qualification package, the Level I Validation Manager may grant Qualification to the trainee on the front cover of this qualification package.

DIVIDER

PAGE

AMWTP Advanced Mixed Waste Treatment Project	*Advanced Mixed Waste Treatment Project* *QUALIFICATION PACKAGE* *Visual Examination Expert Lead*	**QCVEELEA** **Rev 2**

Employee Name Ron Grise S# 103914

Visual Examination Expert Lead

Qualification Package Number: QCVEELEA

The manager granting qualification acknowledges that the employee possesses the knowledge, skills, and abilities to perform this job function correctly the first time, safely and compliantly.

Qualification granted by: **Level I Validation Manager**	George Byram	George Byram	6/9/14
Manager Title	Print Name	Signature	Date

Form-1268, Production System Access Request, has been submitted for the appropriate WTS role(s) for this individual.	Ron Grise	Ron Grise	6/9/14
	Print Name/Title	Signature	Date

Required Attachments: Check box if attached	Remedial Form ☐ (If used)	Exception Form ☐ (If used)

Qual Pack Issued By :	Amy Betzer	Amy Betzer	5/12/14
	Print Name	Signature	Date

TRAINING DEPT.
JUN 09 2014

Qualification Package Approval Section

Initials: AB

Line Manager Approval	Sue Peterman	Signature on File	12/3/12
	Print Name	Signature	Date

Training Manager Approval	Todd Golberg	Signature on File	12/3/12
	Print Name	Signature	Date

AMWTP Advanced Mixed Waste Treatment Project	*Advanced Mixed Waste Treatment Project* *QUALIFICATION PACKAGE* *Visual Examination Expert Lead*	**QCVEELEA** **Rev 2**

Employee Name Ron Grise S# 103914

Revision History

Revision Number	Affected Pages	Description of Change	Date
0	ALL	Initial Issue. This qualification checklist replaces TCVEEXPT and QCWPVEE. The VEE has DOE O 5480.20A Technician education & experience requirements, which are different from the VEE Lead, which is a Tech Staff position. VEE Leads are qualified by QCVEELEA qualification checklist.	5/28/12
1	ALL	Deleted old 3.2.1; Justification: Documents listed in Sec. 3.2 comprise the sum of 3.2.1. Old - Corrected 3.2 document titles and added two documents. Adjusted Section 3 to reflect read/review instructions for required reading. Made editorial corrections. Update to new format. Implemented Training/Evaluation Standard as applicable.	6/9/10
2	All	Periodic review; Add RPT-TRUW-83 to required reads; add 0AWT2309 to list of courses.	12/3/12

Modification Record

Mod Letter	Affected Pages	Description of Change	Management Approval *	Date

* Manager signature required for modifications.

AMWTP Advanced Mixed Waste Treatment Project	*Advanced Mixed Waste Treatment Project* *QUALIFICATION PACKAGE* *Visual Examination Expert Lead*	**QCVEELEA** **Rev 2**

Employee Name Ron Grise S# 103914

Signature Roster
Personnel signing blocks in this qualification package must print their name legibly, sign and initial. Signature by Evaluators indicates they have used the Training/Evaluation Standard and performed evaluations IAW MP-RTQP-14.13. Copy this sheet if necessary.

Name (Printed)	Signature	Initials
Amy Betzer	Amy Betzer	AMB
George Byram	George Byram	GB
L J WALKER	L J Walker	LJW
Ron Grise	Ron Grise	RG

Employee Name Ron Grise S# 103914

1.0 **Scope**
The QAPjP, MP-TRUW-8.2, identifies the Visual Examination Expert (VEE) Lead, as a qualified position, and requires requalification every two years. The VEE Lead will be familiar with the waste generating processes that have taken place at the AMWTP and will also be familiar with all types of waste being characterized at the AMWTP. The VEE Lead is responsible for the overall direction and implementation of the VE at the AMWTP. This individual is selected based on experience and training in the types of waste being characterized, and receives training in the same elements as the VE personnel with both formal training and OJT. Qualification of a VEE Lead is based on familiarity with waste generating processes and familiarity with the types of waste being characterized. The VEE Lead will access HWMA/RCRA areas to provide direction to Visual Examiners and Operations Management concerning Visual Examination (VE) events and has the authority to set task lists and disposition codes in WTS. The VEE will also perform classroom and OJT instruction/performance assessment. The VEE may be disqualified if any of the following conditions exist: Extended absence, identified training expires, failure to maintain Hazwoper Refresher training, performance deficiencies. Refer to MP-RTQP-14.4, Personnel Qualification and Certification.

AMWTP Advanced Mixed Waste Treatment Project	*Advanced Mixed Waste Treatment Project* *QUALIFICATION PACKAGE* *Visual Examination Expert Lead*	**QCVEELEA** **Rev 2**

Employee Name Ron Grise S# 103914

2.0 **Prerequisites**
Ensure the trainee has successfully completed the requirements listed below before completing this qualification checklist.
The Employee Position Description (EPD), Form-1018 has been reviewed or a new one completed to ensure the duties of this position are included and to verify the education and experience requirements have been satisfied. (MP-RTQP-14.1). The employees Individual Training Plan (ITP), Form-1020, is current, or has been updated, to include the appropriate RCRA Profile and all courses required for personnel performing tasks in the capacity of a VEE Lead. The employee has completed all initial training *and is current* on the applicable qualifications / checklists listed on the ITP to support this qualification checklist. Level I Validation Manager — Date 6/9/14

	Date Requirement Was Completed	**Signature** (Training Representative or SS)	**Date**
2.1 None	N/A	N/A	N/A

Employee Name Ron Grise S# 103914

3.0 Initial & Continuing Training / Knowledge / Required Reading

The initial training courses identified pertain to the job function/duties and will be verified complete by the VEE SME or Lead, or a Training Representative.

3.1 Training Courses (Indicate Courses that are Recurring):	Date Requirement was Complete	Recurring Training /Qualification Frequency
3.1.1 0AWT1118, Nevada Test Site WAC (CBT)	9/30/12	24 months
3.1.2 0AWT2309, Safety Basis	7/24/12	0 months/initial
3.1.3 0AW T3141, Visual Examination Indoctrination	5/21/07	0 months/initial
3.1.4 0AW T3142, Visual Examination	9/10/12	0 months/initial
3.1.5 0AW T3143, WTS & DQOs	5/24/07	0 months/initial
3.1.6 0AWT4138C, Trackwise Training	8/13/06	0 months/initial

Training Representative or a qualified **VEE Lead** verify initial training courses are complete:	Amy Betts Signature	5/12/14 Date

Sign-off by the VEE indicates that each required reading has been reviewed IAW with the Training/Evaluation Standard and that the Trainee demonstrates a satisfactory understanding of how it pertains to their job responsibilities.

3.2 Required Reading: Operating Instructions	VEE SME or Lead	Date
3.2.1 INST-OI-16 Drum Coring (For familiarity)		5-29-14
3.2.2 INST-OI-73 Manual Drum Coring *(For familiarity)*		5-29-14

AMWTP Advanced Mixed Waste Treatment Project	*Advanced Mixed Waste Treatment Project* *QUALIFICATION PACKAGE* *Visual Examination Expert Lead*	**QCVEELEA** **Rev 2**

Employee Name Ron Grise S# 103914

3.2.3 INST-OI-12 RTR Ops (Drum) (Initial – for familiarity)	Wael	5-14-14
3.2.4 INST-OI-41 RTR Ops (Box) (For familiarity)	Wael	~~5-29-14~~ ~~5-15-14~~ 5-15-14
3.2.5 INST-OI-60 RTR Ops (Quick Scan) *(For familiarity)*	Wael	5-15-14
3.2.6 INST-OI-81 RTR Ops (WIPP Cert for Boxes) *(For familiarity)*	Wael	5-29-14
3.2.7 INST-FOI-21, Drummed Waste Handling Operations *(For familiarity)*	Wael	5-15-14
3.2.8 INST-FOI-23 SCW Ops. (For familiarity)	Wael	5-15-14
3.2.9 INST-FOI-25 SCW PAM Ops (For familiarity)	Wael	5-15-14
3.2.10 INST-FOI-16 Box Line Ops (For familiarity)	Wael	5-15-14
3.2.11 INST OI-11 Waste Container Handling *(For familiarity)*	Wael	~~5-16-14~~ 5-15-14
3.2.12 INST-OI-23 Soil Removal Ops *(For familiarity)*	Wael	5-16-14
3.2.13 INST-OI-24, Waste Packaging	Wael	5-16-14
3.2.14 INST-OI-68 Drum Treatment Facility Ops *(For familiarity)*	Wael	5-29-14
3.2.15 INST-OI-34 Non-Facility Visual Examination Ops	Wael	5-16-14
3.2.16 INST-FOI-17 Facility Visual Examination Ops	Wael	5-16-14
3.2.17 INST-OI-75, Container-in-Container Sampling *(For familiarity)*	Wael	5-29-14

Employee Name Ron Grise S# 103914

3.3 Required Reading: Other Documents	VEE SME or Lead	Date
3.3.1 RPT-DSA-02, for Operations Chapters 4 & 5	Wash	5-22-14
3.3.2 MP-Q&SI-5.3, Corrective Action	Wash	5-22-14
3.3.3 MP-Q&SI-5.4, Identification of Nonconforming Conditions	Wash	5-22-14
3.3.4 MP-TRUW-8.1, Certification Plan for INL Transuranic Waste	Wash	5-23-14
3.3.5 MP-TRUW-8.2; Quality Assurance Project Plan (QAPjP)	Wash	5-23-14
3.3.6 MP-TRUW-8.5, TRU Waste Certification *(For familiarity)*	Wash	5-23-14
3.3.7 MP-TRUW-8.8, Level I Validation	Wash	5-23-14
3.3.8 MP-TRUW-8.13, Collection, Review, Confirmation, & Management of AK Documentation *(For familiarity)*	Wash	5-23-14
3.3.9 RPT-TRUW-04, Acceptable Knowledge Document for the Battelle Columbus Laboratories Building JN-4 Plutonium Laboratory *(For familiarity)*	Wash	5-24-14
3.3.10 RPT-TRUW-05, AMWTP Waste Matrix Code Reference Manual	Wash	5-24-14
3.3.11 RPT-TRUW-06, AMWTP TRU Waste Management Acceptable Knowledge Elements *(For familiarity)*	Wash	5-24-14
3.3.12 RPT-TRUW-09, Acceptable Knowledge Summary for First/Second Stage Sludge *(For familiarity)*	Wash	5-24-14
3.3.13 RPT-TRUW -12, AMWTP Waste Stream Designations	Wash	5-24-14

Employee Name Ron Grise S# 103914

3.3.14 RPT-TRUW-13, Acceptable knowledge document for INL stored transuranic waste-Mound Plant Waste *(For familiarity)*		5-24-14
3.3.15 RPT-TRUW-15, Acceptable Knowledge Summary for Building 374 Sludge *(For familiarity)*		5-24-14
3.3.16 RPT-TRUW-23, Acceptable Knowledge Summary for solidified Acid/Caustic Waste (BN835) *(For familiarity)*		5-29-14
3.3.17 RPT-TRUW-30, Acceptable Knowledge Summary for Supercompactor Debris Waste (BN510) *(For familiarity)*		5-29-14
3.3.18 RPT-TRUW-44, Acceptable Knowledge Summary for Non Special Metal (BN296) *(For familiarity)*		5-29-14
3.3.19 RPT-TRUW-46, Acceptable Knowledge Summary for Glass Debris Waste (BN243) *(For familiarity)*		5-29-14
3.3.20 RPT-TRUW-48, Acceptable Knowledge Summary for Leaded Rubber Debris Waste (BN252) *(For familiarity)*		5-30-14
3.3.21 RPT-TRUW-52, Acceptable Knowledge Summary for Firebrick Debris Waste (BN161) *(For familiarity)*		5-30-14
3.3.22 RPT-TRUW-53, Acceptable Knowledge Summary for Mound Debris Waste (BN304) *(For familiarity)*		5-30-14
3.3.23 RPT-TRUW-56, Acceptable Knowledge Document for INL Stored Transuranic Waste – Rocky Flats Plant *(For familiarity)*		5-30-14
3.3.24 RPT-TRUW-59, Acceptable Knowledge Summary for Special Setups Waste (BN004)		5-30-14
3.3.25 RPT-TRUW-63, Acceptable Knowledge Summary for Cemented Sludge (BN836) *(For familiarity)*		5-30-14

Employee Name Ron Grise S# 103914

3.3.26 RPT-TRUW-83, Acceptable Knowledge Summary for Supercompacted Debris Waste (BN510.1)	CJ Wash	5-30-14
3.3.27 CCP-PO-003, CCP Transuranic Waste Authorized Methods for Payload Control (CCP CH-TRAMPAC)	CJ Wash	5-30-14
3.3.28 DOE/ NV-325, Nevada Test Site Waste Acceptance Criteria *(For familiarity)*	CJ Wash	5-31-14
3.3.29 INEL-96/0280, Acceptable Knowledge (AK) Document for INEEL Stored Transuranic Waste – Rocky Flats Plant *(For familiarity)*	CJ Wash	5-31-14
3.3.30 NM4890139088, WIPP Hazardous Waste Permit Waste Analysis Plan *(Review changes – for impacts on VE)*	CJ Wash	5-31-14
3.3.31 DOE/WIPP-02-3122, Contact-Handled Waste Acceptance Criteria for the Waste Isolation Pilot Plant (CH-WAC) *(Review changes – for impacts on VE)*	CJ Wash	5-31-14
3.3.32 DOE/CBFO-94-1012, Quality Assurance Program Document (Initial – for familiarity)	CJ Wash	5-31-14
3.3.33 40 CFR 260 to 265, and 268, RCRA Regulations associated with solid and hazardous waste determinations *(For familiarity)*	CJ Wash	5-31-14

Sign-off by the VEE or SS indicates that each knowledge item has been reviewed and that the Trainee demonstrates a satisfactory understanding of how it pertains to their job responsibilities.

3.4 Knowledge	VEE SME or Lead	Date
3.4.1 Discuss the DSA and Safety Basis and how they apply to tasks covered in this qualification checklist.	CJ Wash	6/2/14
3.4.2 Discuss ISIH and how it applies to tasks covered in this qualification checklist.	CJ Wash	6/2/14

Employee Name Ron Grise S# 103914

3.4.3	Discuss ISMS and how it applies to tasks covered in this qualification checklist.	JW Jwack	4/2/14
3.4.4	Discuss Conduct of Operations and how it applies to tasks covered in this qualification checklist.	JW Jwack	4/2/14
3.4.5	Discuss Criticality Safety and how it applies to tasks covered in this qualification checklist.	JW Jwack	4/2/14
3.4.6	Discuss the overall responsibilities of the VEE Lead.	JW Jwack	4/2/14

4.0 OJT Training Objectives

The elements below are to be performed (P), simulated (S), or discussed (D) as indicated. If there are two or more choices (P, S, or D), then circle all that apply.

Initials by the VEE indicate that the Trainee is ready to be evaluated per MP-RTQP-14.13. The Trainee has a satisfactory understanding of how it pertains to his/her job responsibilities. It is noted that a successful practice cannot count as a successful OJT evaluation.

Sign-off by the VEE (as the Evaluator) indicates successful performance of the task. If the trainee cannot perform the task without coaching, terminate the Performance Assessment.

		P S D	VEE SME or Lead Initials	Evaluator Signature & date
4.1	**VEE Lead Performance Objectives**			
4.1.1	Discuss how to ensure that VE Characterization process data validation/certification is accomplished in accordance with requirements.	D	JW	Jwack 4/2/14
4.1.2	Discuss and locate waste material parameters and descriptions.	D	JW	Jwack 4/2/14
4.1.3	Discuss and identify closure method and layers of confinement through video or VE.	P S D	JW	Jwack 4/2/14
4.1.4	Identify filter models.	P S D	JW	Jwack 4/2/14

Employee Name Ron Grise S# 103914

4.1.5	Identify rigid liner types and status/condition.	P(S)	JW	Jwade 4/2/14
4.1.6	Discuss and identify waste drum configurations through video or VE.	P(S)	JW	Jwade 4/2/14
4.1.7	Discuss and identify packaging and waste materials through video or VE.	P(S)	JW	Jwade 4/2/14
4.1.8	Discuss and estimate Volumes and Nominal Densities through video or VE.	P(S)	JW	Jwade 4/2/14
4.1.9	Identify common and conditional items in waste through video or VE.	P(S)	JW	Jwade 4/2/14
4.1.10	Identify prohibited, suspect, or inconclusive items in waste through video or VE.	P(S)	JW	Jwade 4/2/14
4.1.11	Discuss and assign waste-to-waste material parameter categories.	P(S)	JW	Jwade 4/2/14
4.1.12	Discuss and assign Waste Matrix Codes.	P(S)	JW	Jwade 4/2/14
4.1.13	Identify and discuss IDCs for newly generated secondary waste and compacted waste.	P(S)	JW	Jwade 4/2/14
4.1.14	Perform volume and weight conversions.	P(S)	JW	Jwade 4/2/14
4.1.15	Generate (enter) and verify (concur with) examination-related data in WTS.	P(S)	JW	Jwade 4/2/14
4.1.16	Discuss Audio/Video equipment available, and the requirements associated with their use.	D	JW	Jwade 4/2/14
4.1.17	Define Data Quality Objectives (DQOs) for the VE program.	D	JW	Jwade 4/2/14
4.1.18	Discuss conditions where a complete VE cannot be performed.	D	JW	Jwade 4/2/14
4.1.19	Discuss integration of RTR/VE Update (RVU) with the original analysis and the Batch Data Report.	D	JW	Jwade 4/2/14

AMWTP Advanced Mixed Waste Treatment Project	*Advanced Mixed Waste Treatment Project* *QUALIFICATION PACKAGE* *Visual Examination Expert Lead*	**QCVEELEA** **Rev 2**

Employee Name Ron Grise S# 103914

	P S D	VEE Initials	Evaluator Signature & date
4.1.20 Discuss the Data Review and Validation Process.	D	JW	JWade 4/2/14
4.1.21 Discuss the actions to be taken if assistance is required by operations to identify material in a breached container event in buildings WMF-628, 634, 635, and 676.	D	JW	JWade 4/2/14
4.1.22 Demonstrate the ability to change or override data in WTS.	P (S)	JW	JWade 4/2/14

5.0 Emergency / Abnormal Conditions

The elements below are to be simulated (S) or discussed (D) as indicated. If both S and D are indicated, then circle which one was used.

Initials by the VEE indicate that the Trainee is ready to be evaluated per MP-RTQP-14.13. The Trainee has a satisfactory understanding of how it pertains to his/her job responsibilities. It is noted that a successful practice cannot count as a successful OJT evaluation.

Sign-off by the evaluator indicates successful performance of the task. If the trainee cannot simulate or discuss the task without coaching, terminate the Performance Assessment.

		S D	Evaluator Signature	Date
5.1	Fire / Alarm	S (D)	JWade	4/2/14
5.2	Location of fire extinguishers / fire alarm boxes	S (D)	JWade	4/2/14
5.3	Dropped waste container	S (D)	JWade	4/2/14
5.4	Breached Container	S (D)	JWade	4/2/14
5.5	CAM Alarm	S (D)	JWade	4/2/14

AMWTP Advanced Mixed Waste Treatment Project	*Advanced Mixed Waste Treatment Project* *QUALIFICATION PACKAGE* *Visual Examination Expert Lead*	**QCVEELEA** **Rev 2**

Employee Name Ron Grise S# 103914

	S D	Evaluator Signature	Date
5.6 Spill / Contamination Release (MP-EC&P-7.10)	S D	CJ Wack	4/2/14
5.7 Injured Person	S D	CJ Wack	4/2/14
5.8 Loss of ventilation/air system	S D	CJ Wack	4/2/14
5.9 Loss of Commercial Power	S D	CJ Wack	4/2/14
5.10 Evacuation (MP-EP&C-12.16)	S D	CJ Wack	4/2/14
5.11 Take Cover (MP-EP&C-12.16)	S D	CJ Wack	4/2/14

6.0 **Examinations** (Sections 1-5 must be complete prior to testing)	**NO EXAM REQUIRED**

7.0 **Recommendation for Qualification**		
After discussion with the candidate concerning this job scope, the Visual Examination Expert SME or Lead acknowledges that the trainee possesses the knowledge, skills, and abilities to perform this job function correctly the first time, safely and compliantly. In addition, the individual recommending qualification of the candidate has completed the quality validation of this document in accordance with the requirements in MP-DOCS-18.2. (Guidance is given in the Training/Evaluation Standard)		
VEE Lead or SME Title	CJ Wack Signature	4/2/14 Date

Upon satisfactory completion of this qualification package, the Level I Validation Manager may grant Qualification to the trainee on the front cover of this qualification package.

TABLE OF AUDITED DOCUMENTS			
NUMBER	PROCEDURE NUMBER	REVISION NUMBER	PROCEDURE TITLE
1.	INST-CD&M-11.1.2	15	Facility Modification Proposal Preparation
2.	INST-CD&M-11.2.1	9	Software Version Control
3.	INST-CD&M-11.2.2	16	Software Inventory Classification
4.	INST-CD&M-11.2.3	9	System Data Change Request
5.	INST-CD&M-11.2.6	5	Temporary Software Override
6.	INST-CMNT-10.14.1	8	Testing In-Plant and Process Instrumentation
7.	INST-CMNT-10.5.1	13	Calibration and Control of Measuring and Test Equipment
8.	INST-FOI-17	27	Facility Visual Examination Operations
9.	INST-FOI-20	42 FC-1	Supercompactor and Post-Compaction Operations
10.	INST-OI-09	57	Retrieval Inspection Station Operations
11.	INST-OI-11	57	Waste Container Handling
12.	INST-OI-12	55	Real-Time Radiography Examinations (Certification Scans)
13.	INST-OI-34	28	Non-Facility Visual Examination Operations
14.	INST-OI-45	20	Drum Filter Installation
15.	INST-OI-50	18	WMF-615 Filter Insertion Operations
16.	LST-RTQP-03-IM	1	WIPP Training Requirements Implementation Matrix
17.	MP-CD&M-11.1	10	Change Control
18.	MP-CD&M-11.2	21	Software Quality Assurance
19.	MP-CMNT-10.14	6	In-Plant and Process Instrumentation Testing Program
20.	MP-CMNT-10.5	10	Measuring and Test Equipment Program
21.	MP-DOCS-18.1	14	Developing Written Work Instructions
22.	MP-DOCS-18.2	17	Records Management
23.	MP-DOCS-18.3	8	Developing Management Procedures
24.	MP-DOCS-18.4	39	Document Control
25.	MP-M&IA-17.1	11	Management Assessment
26.	MP-M&IA-17.2	12	Independent Assessment
27.	MP-M&IA-17.3	8	Quality Assurance Surveillance
28.	MP-PCMT-15.1	16	Acquisition of Material and Services
29.	MP-PCMT-15.21	8	Material Management
30.	MP-PRPL-22.1	36	Production Planning
31.	MP-Q&SI-5.1	9	Investigation and Root Cause Analysis
32.	MP-Q&SI-5.3	13	Corrective Action
33.	MP-Q&SI-5.4	21	Identification of Nonconforming Conditions
34.	MP-Q&SI-5.6	4	Graded Approach
35.	MP-Q&SI-5.8	8	Qualifying Supply Chain Inspectors, Auditors, Lead Auditors and Technical Specialists
36.	MP-RTQP-14.16	8	Training Program Evaluation
37.	MP-RTQP-14.19	9	Training Records Administration
38.	MP-RTQP-14.4	22	Personnel Qualification and Certification
39.	MP-RTQP-14.6	10	Job Analysis
40.	MP-TRUW-8.1	24	Certification Plan for INL Transuranic Waste
41.	MP-TRUW-8.2	17	Quality Assurance Project Plan
42.	MP-TRUW-8.5	29	TRU Waste Certification [Includes Offsite Shipping Module (OSM)]
43.	MP-TRUW-8.8	39	Level I Data Validation
44.	MP-TRUW-8.9	26	Level II Data Validation
45.	MP-TRUW-8.11	25	Data Reconciliation
46.	MP-TRUW-8.12	25	Waste Receipt and Shipping Inspection

TABLE OF AUDITED DOCUMENTS			
NUMBER	**PROCEDURE NUMBER**	**REVISION NUMBER**	**PROCEDURE TITLE**
47.	MP-TRUW-8.13	25	Collection, Review, and Management of Acceptable Knowledge Documentation
48.	MP-TRUW-8.14	15	Preparation of Waste Stream Profile Forms
49.	MP-TRUW-8.26	6	Reports to Management

Facility Modification Proposal Preparation

(General Use)

Advanced Mixed Waste Treatment Project

Approval:

(Signature on file. See DCR-12964.)

02/27/14
Date

AMWTP OPERATING INSTRUCTIONS		
INST-CD&M-11.1.2, Rev. 15	Issued: 02/27/14	Effective: 02/28/14

Facility Modification Proposal Preparation

TABLE OF CONTENTS

1.0 PURPOSE/SCOPE 1

2.0 ROLES AND RESPONSIBLITIES 2

3.0 PRECAUTIONS AND LIMITATIONS/PREREQUISITES 4

3.1 Precautions and Limitations 4

3.2 Prerequisites 4

4.0 INSTRUCTIONS 4

4.1 General 4

4.2 FMP Origination and Screening 5

4.3 Determination of Design Input and Impacts 7

4.4 Review 11

4.5 Facility Change Group Review 12

4.6 Environmental Checklist 15

4.7 USQ Process Applicability Review 16

4.8 Final Authorization 16

4.9 Revising an Authorized FMP 17

4.10 FMP Implementation – Field Implementation 23

4.11 FMP Cancellation 24

4.12 FMP Completion 24

5.0 DEFINITIONS 25

6.0 REFERENCES 26

7.0 RECORDS 27

8.0 EXHIBITS 27

9.0 APPENDICES 27

Appendix A – Revision Log A1

AMWTP OPERATING INSTRUCTIONS		
INST-CD&M-11.1.2, Rev. 15	Issued: 02/27/14	Effective: 02/28/14

Facility Modification Proposal Preparation

1.0 PURPOSE/SCOPE

This instruction establishes the processes for the preparation and use of Form-1057, Facility Modification Proposal, and Form-1953, Facility Modification Proposal Revision Sheet.

Addition (new) or relocation of temporary structures, utilities, and services are within the scope of the *facility modification* (see def.) process.

The facility modification process shall only apply to those radiological instruments that are part of a permanently installed Class I, II, or III plant or facility *structures, systems, and/or components* (SSCs; see def.). The process shall not, for example, apply to portable, non-engineered equipment (e.g., "friskers," portable air monitors). The facility modification process also does not apply to adjustments to equipment or set points that are made in accordance with approved procedures.

Software changes, including software data changes, are performed in accordance with MP-CD&M-11.2, Software Quality Assurance, and/or INST-CD&M-11.2.5, Integrated Control System Software Modifications.

The change control process requires changes to the facility, processes, RPT-DSA-02, Documented Safety Analysis, RPT-TSR-03, Technical Safety Requirements, procedures, and regulations to be reviewed to determine whether the existing training and qualification programs are consistent with planned facility operations and/or process conditions.

(DOE O 426.2)

The facility modification proposal (FMP) process does not apply to transitory changes and conditions that occur during the field implementation of modifications, including any associated hazard analyses. Field implementation is governed by PD-CMNT-01, Nuclear Maintenance Management Program Description, and MP-COPS-9.18, Work Management, Planning, and Control.

The FMP process does not apply to changes affecting non-quality level SSCs as long as those changes do not have the potential to impact Class I, II, or III SSCs, or plant processes (including operations or maintenance procedures). In considering the above, the potential for impacts should be broadly considered (e.g., a non-quality level SSC that is to be modified such that during a seismic event, it could dislodge and strike a Class II system would be considered to have the potential to impact).

The FMP process does not apply to like-for-like equipment replacements as long as the replacement has been verified to conform to existing design criteria per INST-CD&M-11.1.3, Approved Equivalent Parts.

Although procedure changes are governed by MP-DOCS-18.4, Document Control, any procedure change that involves a change to design, including operating parameters (i.e., those involving waste retrieval, storage, handling, treatment, or shipping, including operation or maintenance of associated equipment), will also require an FMP to be processed in accordance with this procedure.

The FMP process directs uniform management of design process and engineering change control (see MP-CD&M-11.1, Change Control) to ensure safe, effective engineered products and to support *configuration management* (CM; see def.) of *technical baselines* (see def.). This instruction includes directions for the preparation, review, approval, implementation, revision, turnover, closeout, and cancellation of facility modifications.

2.0 ROLES AND RESPONSIBLITIES

Performer	Responsibilities
Originator (see def.)	• Originates FMP form (Form-1057) and process per procedure based on identified need and/or management direction • Assumes role as *designated lead/project lead* (DL/PL; see def.) or provides turnover to DL/PL, as directed by management.
DL/PL	• Performs FMP process, applying due diligence in: o Performing screen to determine technical baseline impacts and facility change group (FCG) involvement o Identifying and addressing impacts • Presents FMP to FCG, as required o Resolves action items (AIs) identified by the FCG • Tracks identified impact and required actions to completion • Ensures FMP is coordinated with design and work control processes, as required • Ensures proper closure and record retention of Form-1057 • Verifies portable/government furnished equipment for code compliance • Initiates revisions to the FMP using Form-1953.

Performer	Responsibilities
Environmental	• Performs environmental checklists per MP-EC&P-7.9, Environmental Checklist/National Environmental Policy Act Documentation Procedure • Records EC number, required actions, and TrackWise AI numbers (if any) on Form-1057 or Form-1953, as applicable.
FCG Chair	• Ensures the FCG process is followed, including: o Ensures a quorum is present at FCG meetings o Ensures any required actions are identified and addressed prior to authorization of FMP.
FCG Members	• Provides review and input to help ensure that technical baseline impacts are properly addressed.
FCG Recorder	• Schedules the FCG meetings and records the minutes, including any required actions • Provides copies of Form-1057 and meeting minutes to each attendee.
Unreviewed Safety Question (USQ) Evaluator	• Performs USQ evaluations per MP-NSPC-3.2, Unreviewed Safety Question Process • Records USQ evaluation number(s) on Form-1057 and Form-1953.
Nuclear Facility Manager (NFM)	• Reviews and concurs with FMP determinations as defined in this procedure, and documents such on appropriate forms.
Nuclear Criticality Safety	• Reviews Forms-1057 and -1953 for Nuclear Criticality Safety impacts.
Engineering Manager	• Reviews and concurs with FMP determinations and revisions as defined in this procedure.
System Engineer (SE)/Cognizant System Engineer (CSE)	• Performs an independent review of all design input requirements for the requested modification • CSE performs steps as required when the FMP affects a Vital Safety System as defined in PLN-CD&M-001, System Engineer Program.

Performer	Responsibilities
Responsible Manager (Shift Supervisor [SS]/ Plant Shift Manager/ Production Manager)	• Reviews FMPs to ensure all prerequisites are complete prior to authorizing field implementation • Reviews completed FMP for completeness and accuracy and signs for acceptance of modification.

3.0 PRECAUTIONS AND LIMITATIONS/PREREQUISITES

3.1 Precautions and Limitations

None

3.2 Prerequisites

None

4.0 INSTRUCTIONS

NOTE: *This procedure is written for use of a hard copy of Form-1057 and/or Form-1953. Portions or all of this procedure may be performed using an electronic change tracking software package such as Test Track Pro.*

4.1 General

4.1.1 Originator/DL: **IF** there is insufficient room in any section of Form-1057 or Form-1953
OR IF any other pertinent information is necessary,
THEN attach sheets with the required information or other documents (e.g., engineering design files [EDFs], Davis-Bacon Act Implementation Plans, environmental checklists).

4.1.1.1 Number attachments numerically, starting with Attachment 1.

4.1.1.2 Mark each page of the attachment (in the upper right corner if possible) with the attachment number, the FMP number, and page x of y where x is the page number and y is the number of pages for that attachment.

4.1.1.3 Document all attachments in the Attachments block of Section 1, of Form-1057.

NOTE: *The FMP process from start to finish may span several months.*

4.1.2 Originator/DL: Submit to Engineering Document Control (EDC) the in-process Form-1057 and all attachments, when not being actively used.

4.1.2.1 Check out the FMP and attachments from EDC when needed, and then check back in.

4.2 FMP Origination and Screening

NOTE: *Sections 4.2 through 4.3 in this procedure may be performed concurrently or out of sequence as long as they are performed in a logical sequence and are complete prior to commencing Section 4.4.*

4.2.1 Originator: Obtain an FMP number from EDC.

4.2.1.1 After hours, obtain FMP number from the following file: After Hour Engineering Document Numbers.xls. (\\amws0025\Enterprise\Design Engineering).

4.2.2 Originator: Complete Section 1.1 of Form-1057.

4.2.3 Originator: Provide FMP potential impact information in Section 2 of Form-1057.

4.2.3.1 Provide sufficient detail for FCG review.

4.2.3.2 In Section 2.2 of Form-1057, document all assumptions and indicate how the assumptions will be dealt with as follows:

- The assumption will be accepted as is including any associated risks
- The assumption will be verified prior to or during implementation
- The assumption will be controlled through work performance.

4.2.3.2.1 Describe the methodologies for verifying and for controlling assumptions.

4.2.3.3 In Section 2.3 of Form-1057, describe the required status of plant or equipment.

4.2.3.3.1 For example, SHUTDOWN/SUSPENSION and whether the status is required before the modification begins or before the modification is tested.

4.2.3.4 In Section 2.4 of Form-1057, describe the expected and possible impacts to interfacing plants/systems caused by implementation of the FMP.

4.2.3.4.1 Ensure all requirements from permits, waste acceptance criteria, etc. are carried through to completion including during document/procedure modification.

4.2.3.5 **IF** the FMP involves construction, painting, or decorating activities with the potential to exceed a cost of $2,000, **THEN** mark the Yes box in Section 2.5 of Form-1057 **AND** submit a Davis-Bacon Committee Case Record in accordance with MP-CD&M-11.16, Davis-Bacon Act Implementation Plan.

4.2.4 Originator: Obtain management assignment of DL/PL, per Section 2.6 of Form-1057, that will lead effort to complete FMP and resolve identified impacts.

4.2.4.1 Identify assigned DL/PL in Section 1.2 of Form-1057 **AND** provide turnover of information and materials as appropriate.

4.2.5 Originator: Sign in Section 2.7 of Form-1057 for completion of Sections 1.1, 1.2, and 2.

4.2.6 DL/PL: Obtain advice from the responsible subject matter expert (SME) and answer all screening questions in Section 3.1 of Form-1057.

4.2.6.1 **IF** any question is answered YES,
THEN provide explanation in the comment section for each (i.e., criticality safety; modification will change fissile gram equivalent [FGE] values).

4.2.7 DL/PL: **IF** no FCG involvement is required due to all questions being answered NO,
THEN check the box in Section 3.2 of Form-1057.

4.2.8 DL/PL: **IF** FCG involvement is required due to one or more questions being answered YES,
THEN check the box in Section 3.3 of Form-1057.

4.2.9 DL/PL: Complete Section 3.4 of Form-1057.

4.2.9.1 Forward Form-1057 and any attachments to EDC for retention in accordance with MP-CD&M-11.9, Control of Engineering Documents/Records.

4.3 Determination of Design Input and Impacts

4.3.1 DL/PL: Complete Section 4 of Form-1057, identifying non-applicable sections as N/A.

NOTE: *Although design input may be solicited formally or informally, if FCG approval is required, it is highly recommended that a formal Design Input meeting is held with representatives from all groups represented in the FCG that may be affected by the change. This approach will allow group synergies to facilitate the evaluation of design alternatives to reach a design concept conclusion. The agreed upon design concept can then be used as the basis for design input determinations with less risk of later changes to the design concept.*

4.3.1.1 Ensure that all modifications will comply with the design requirements listed in RPT-CD&M-02, Technical Design Requirements, and that modifications to processes will comply with all permit (AMWTP HWMA/RCRA Permit, AMWTP HWMA/RCRA TSA Interim Status Document, Treatment Facility Permit to Construct Application, etc.) and waste acceptance criteria requirements.

4.3.1.1.1 Document any additional required design criteria, including applicable codes, standards, and other technical and functional requirements in Section 4.1 of Form-1057.

4.3.1.1.2 If necessary, capture design criteria in an attached or referenced document such as an EDF.

4.3.1.2 DL/PL: Document design input attachments (if any) in accordance with Step 4.1.1
AND sign as DL/PL in Section 4.1 of Form-1057.

NOTE 1: *The CSE performs steps identified as SE/CSE when a Vital Safety System, as defined in PLN-CD&M-001, is affected.*

NOTE 2: *The engineering manager performs the independent review if the CSE is the DL/PL.*

4.3.1.3 SE/CSE/Engineering Manager: Perform an independent review of all design input requirements for the requested modification.

4.3.1.3.1 **WHEN** satisfied that all design input requirements are met,
THEN sign as independent reviewer in Section 4.1.1 of Form-1057.

4.3.1.4 CSE/Engineering Manager: Ensure no design features that are credited in the Documented Safety Analysis (DSA) are adversely impacted by this change.

4.3.1.4.1 **WHEN** satisfied that no design feature credited in the DSA will be adversely impacted,
AND that there will be no adverse impact on any regulatory requirements,
THEN sign in Section 4.1.2 of Form-1057.

NOTE: *Radiological Controls manager's signature may be delayed until design effort is sufficiently complete to support a review determination.*

4.3.1.5 DL/PL: Obtain input and signature from Radiological Controls manager (or designee) in Section 4.2 of Form-1057.

4.3.1.5.1 Ensure the data used to establish the information in Section 4.2 are from documented verified sources.

4.3.1.6 DL/PL: Identify in Section 4.3 of Form-1057 any instructions and/or documents that will require development or revision as a result of the facility modification being proposed.

4.3.1.6.1 Obtain input from responsible persons to complete Section 4.3.1 of Form-1057.

4.3.1.6.2 For any document that requires development or revision, ensure that applicable change control document (e.g., document change request, maintenance change request) is referenced when it becomes available.

4.3.1.6.3 Indicate whether or not the documentation change (if any) is required prior to implementation or prior to turnover to operations.

4.3.1.6.4 **IF** documentation change is **NOT** required prior to field implementation
OR NOT required prior to turnover,
THEN obtain concurrence from the NFM.

4.3.1.6.5 NFM: Initial for concurrence of **NOT** making changes prior to implementation or prior to turnover.

4.3.1.7 DL/PL: Identify in Section 4.4 of Form-1057 any drawings or other design documents that need to be developed or revised.

4.3.1.7.1 Obtain input from responsible persons to complete Section 4.4.1 of Form-1057.

4.3.1.8 DL/PL: Complete Section 4.5 of Form-1057 as follows:

4.3.1.8.1 Identify any required acceptance tests or inspections in Section 4.5.1 of Form-1057.

4.3.1.8.2 Cite references where applicable or indicate N/A.

4.3.1.8.3 **IF** a witness (Quality Assurance, Authority Having Jurisdiction, etc.) is required,
THEN list required witness(es)
OR enter "None."

4.3.1.8.4 Ensure any necessary testing requirements are incorporated into work planning documents.

4.3.1.8.4.1 Identify any required inspection documentation (such as Electrical Authority Having Jurisdiction evaluations of non-nationally recognized testing laboratory-listed equipment) to verify equipment, including portable/government-furnished equipment, meets all applicable codes.

4.3.1.9 DL/PL: Identify training requirements and methods necessary to support implementation of change in Section 4.6 of Form-1057.

4.3.1.9.1 Obtain input from Training Department and affected managers.

NOTE: *Action item numbers are not necessary prior to FCG but are to be completed prior to final authorization in Step 4.8.*

4.3.1.9.2 For any items in Section 4.6 of Form-1057 marked yes, identify an AI in TrackWise **AND** document the AI number.

4.4 Review

4.4.1 DL/PL: Ensure Sections 1 through 4 of Form-1057 are complete and adequate, and when satisfied, sign in Section 5 of Form-1057.

NOTE: *Telecom or e-mail approvals are acceptable and are documented on Form-1057.*

4.4.2 DL/PL: **IF** the FCG meeting required box is checked in Section 3.3 of Form-1057,
GO TO Step 4.5
WITHOUT RETURNING TO this step.

4.4.3 DL/PL: Provide FMP to the following for FCG screening concurrence and review of Sections 1 through 4 of Form-1057:

NOTE: *The CSE performs steps identified as SE/CSE when a Vital Safety System, as defined in PLN-CD&M-001, is affected.*

4.4.3.1 SE/CSE: **WHEN** satisfied that Sections 1 through 4 of Form-1057 are complete and adequate,
THEN sign in Section 5 of Form-1057.

4.4.3.2 Nuclear Criticality Safety: **WHEN** satisfied that Sections 1 through 4 of Form-1057 are complete and adequate,
THEN sign in Section 5 of Form-1057.

4.4.3.3 NFM: **WHEN** satisfied that Sections 1 through 4 of Form-1057 are complete and adequate,
THEN perform the following:

4.4.3.3.1 Mark the "Initial to Proceed to FCG" block as N/A.

4.4.3.3.2 Sign in Section 5 of Form-1057.

4.4.3.4 Engineering Manager: **WHEN** satisfied that Sections 1 through 4 of Form-1057 are complete and adequate,
THEN perform the following:

4.4.3.4.1 Mark the "Initial to Proceed to FCG" block as N/A.

4.4.3.4.2 Sign in Section 5 of Form-1057.

4.4.4 DL/PL: **IF** reviewers in Steps 4.4.3.1 through 4.4.3.4 above concur that an FCG is **NOT** required,
GO TO Step 4.6
WITHOUT RETURNING TO this step.

4.4.5 DL/PL: **IF** reviewers in Steps 4.4.3.1 through 4.4.3.4 above believe that an FCG review is required,
THEN correct Sections 3.1, 3.2, and 3.3 of Form-1057.

4.5 Facility Change Group Review

NOTE: *Telecom or e-mail approvals are acceptable and are documented on Form-1057.*

4.5.1 DL/PL: Provide FMP to the following for review of Sections 1 through 4 of Form-1057 for completeness and adequacy to proceed to FCG:

- SE/CSE
- NFM
- Engineering manager.

NOTE: *The CSE performs steps identified as SE/CSE when a Vital Safety System, as defined in PLN-CD&M-001, is affected.*

4.5.2 SE/CSE: Review Sections 1 through 4 of Form-1057
AND when satisfied, sign in Section 5.

4.5.3 NFM: Review FMP package for completeness and adequacy to proceed to FCG
AND, when satisfied, initial in Section 5 indicating approval to proceed to FCG.

4.5.4 Engineering Manager: Review FMP package for completeness and adequacy to proceed to FCG
AND, when satisfied, initial in Section 5 indicating approval to proceed to FCG.

NOTE: *The FCG chair is appointed by the plant manager*.

4.5.5 FCG Chair: Review FMP package for completeness and adequacy to proceed to FCG
AND, when satisfied, determine the desired attendees for the FCG as follows:

A. Required Members:

- Chair
- Nuclear Criticality Safety
- NFM or designee
- Engineering manager or designee
- Environmental
- Quality Assurance
- Representatives from those areas of Section 3 of Form-1057 which were marked "Yes."

B. Optional Members:

- Maintenance
- Nuclear Safety
- Radiological Controls
- Industrial Safety/Industrial Hygiene
- TRU Programs

- Low-Level Waste/Mixed Low-Level Waste Programs
- LLW/MLLW Waste Certification Official
- Training
- Emergency Management
- Other (list).

4.5.5.1 Notify FCG recorder of desired makeup of the FCG.

4.5.6 FCG Recorder: Perform the following:

4.5.6.1 Schedule the FCG meeting for those attendees identified by the FCG chair.

4.5.6.2 Enter the FCG meeting number in Section 5 of Form-1057.

NOTE: *Each attendee at the FCG should have sufficient time to provide an adequate review of the completed FMP.*

4.5.6.3 Provide copies of completed Form-1057 to each invitee as identified by the FCG chair for review prior to the scheduled FCG meeting.

NOTE: *Minutes should note in particular any identified design criteria and actions required prior to FCG approval.*

4.5.6.4 Take minutes of FCG meeting, including recording any required actions.

NOTE: *If unable to attend, a substitute for the DL/PL may be specified by management.*

4.5.7 DL/PL: Present the FMP and any supporting documentation.

4.5.8 DL/PL: **IF** the FCG requires additional work of any sort before approval, **THEN** perform the following:

4.5.8.1 Complete the requirements as documented on the meeting minutes.

NOTE: *The FCG chair will determine if additional review is required by the FCG.*

4.5.8.2 Resubmit Form-1057 to the FCG, as required.

NOTE: *Telecom or e-mail approvals are acceptable and are documented on Form-1057.*

4.5.9 FCG Members: Approve, reject, or request changes to the FMP prior to approval.

4.5.9.1 **WHEN** satisfied that all concerns have been addressed, **THEN** sign in Section 5.

4.5.10 FCG Recorder: Provide copies of meeting minutes to each attendee.

4.6 Environmental Checklist

4.6.1 Environmental: If necessary, complete an environmental checklist (Form-1056,) for the FMP.

4.6.2 Environmental: Complete Section 6 of Form-1057.

4.6.2.1 Enter the environmental checklist number in Section 6 of Form-1057.

4.6.2.1.1 **IF** no checklist is required,
THEN enter "None" in the Environmental Checklist # space.

4.6.2.2 Describe additional actions required for implementation of the FMP, if any.

4.6.2.3 For any items identified in Section 6 of Form-1057, identify an AI in TrackWise
AND document the AI number.

4.6.2.3.1 **IF** none,
THEN enter "None."

4.6.2.4 Sign in Section 6 of Form-1057.

4.7 USQ Applicability Review

4.7.1 Engineering Manager: Perform a USQ process applicability review.

4.7.1.1 **IF** the FMP involves a building or any SSCs within a building listed in LST-NSPC-03, Unreviewed Safety Question Process Applicability – Facilities, **THEN** perform the following steps:

4.7.1.1.1 Mark the check box in the USQ Applicability Review section on Form-1057 indicating that the FMP does **NOT** apply to the USQ process.

4.7.1.1.2 Sign and date the signature line.

4.7.1.2 **IF** the FMP does **NOT** involve a building or any SSCs within a building listed in LST-NSPC-03, **THEN** perform the following:

4.7.1.2.1 Request that a USQ evaluator perform a USQ evaluation.

4.7.1.2.2 USQ Evaluator: Perform a USQ evaluation per MP-NSPC-3.2.

4.7.1.2.3 USQ Evaluator: Record the applicable USQ Categorical Exclusion Review number or USQ Determination number in Section 7 of Form-1057.

4.7.1.2.4 USQ Evaluator: Sign and date the signature line.

4.8 Final Authorization

NOTE: *For FMPs that did not require an FCG meeting, the engineering manager signs for final authorization.*

4.8.1 FCG Chair/Engineering Manager: Review Sections 1 through 7 of Form-1057 for completeness and accuracy.

4.8.2 FCG Chair/Engineering Manager: Review FCG meeting minutes (if any) and ensure all comments (if any) have been satisfactorily resolved.

4.8.3 FCG Chair/Engineering Manager: **IF** a USQ does **NOT** exist **AND** all comments from FCG meeting (if any) are complete, **THEN** sign in Section 8 of Form-1057.

4.9 Revising an Authorized FMP

NOTE 1: *Major changes to an approved FMP may be accomplished with a rewrite of the FMP in accordance with Step 4.2 through 4.8 using the new revision number.*

NOTE 2: *Changes to Sections 4.3 and 4.4 only of Form-1057 do not require the use of this revision process.*

4.9.1 DL/PL: Ensure that all revisions to an authorized FMP, except for obvious typographical errors or changes to Section 4.3 or 4.4 of Form-1057, follow this revision process.

4.9.2 DL/PL: Complete FMP Number and Revision Number blocks on Form-1953.

4.9.2.1 Use the next sequential number for revision number starting with 1.

4.9.2.2 Enter the revision number in the Revision Number block on page 1 of Form-1057.

4.9.3 DL/PL: Complete the Revision Description and Revision Justification blocks in Section 1 of Form-1953.

4.9.4 DL/PL: **IF** the original FMP required approval by the FCG **GO TO** Step 4.9.16 **WITHOUT RETURNING TO** this step.

4.9.5 DL/PL: **IF** the original FMP did **NOT** require approval by the FCG, **THEN** perform the following:

4.9.5.1 Check the "FCG meeting required on original FMP?" "No" box in Section 1 of Form-1953.

4.9.5.2 Obtain input from the responsible SME and review the proposed revision relative to the criteria in Section 3 of Form-1057 to determine if the revision will require an FCG meeting.

4.9.5.3 **IF** any of the answers are now YES,
THEN perform the following:

NOTE: *A revision cannot drive an FMP to FCG if it did not go to FCG originally.*

4.9.5.3.1 Cancel the revision.

4.9.5.3.2 **IF** the change is necessary,
THEN cancel the original FMP in accordance with Section 4.11
AND initiate a new FMP with a new FMP number in accordance with this procedure.

4.9.5.4 Mark the FCG meeting number block in Section 5 of Form-1953 as N/A.

4.9.5.5 Sign the DL/PL block in Section 5 of Form-1953.

4.9.6 DL/PL: Provide Form-1953 to the SE/CSE for screening concurrence and review:

NOTE: *The CSE performs steps identified as SE/CSE when a Vital Safety System, as defined in PLN-CD&M-001, is affected.*

4.9.7 SE/CSE: **WHEN** satisfied that Section 1 of Form-1953 is complete and adequate,
THEN sign in Section 5 of Form-1953.

4.9.8 DL/PL: Provide Form-1953 to Nuclear Criticality Safety for screening concurrence and review:

4.9.9 Nuclear Criticality Safety: **WHEN** satisfied that Section 1 of Form-1953 is complete and adequate,
THEN sign in Section 5 of Form-1953.

4.9.10 DL/PL: Provide Form-1953 to the Nuclear Facility Manager for screening concurrence and review.

4.9.11 NFM: **WHEN** satisfied that Section 1 of Form-1953 is complete and adequate,
THEN perform the following:

4.9.11.1 Mark the "Initial to Proceed to FCG" block as N/A.

4.9.11.2 Sign in Section 5 of Form-1953.

4.9.12 DL/PL: Provide Form-1953 to the engineering manager for screening concurrence and review:

4.9.13 Engineering Manager: **WHEN** satisfied that Section 1 of Form-1953 is complete and adequate,
THEN perform the following:

4.9.13.1 Mark the "Initial to Proceed to FCG" block as N/A.

4.9.13.2 Sign in Section 5 of Form-1953.

4.9.14 DL/PL: **IF** all of the screening questions are still **NO**,
GO TO Step 4.9.30
WITHOUT RETURNING TO this step.

4.9.15 DL/PL: **IF** reviewers in Steps 4.9.7 through 4.9.13 above believe that an FCG review is required,
THEN perform the following:

NOTE: *A revision cannot drive an FMP to FCG if it did not go to FCG originally.*

4.9.15.1 Cancel the revision.

4.9.15.2 **IF** the change is necessary,
THEN cancel the original FMP in accordance with Section 4.11
AND initiate a new FMP with a new FMP number in accordance with this procedure.

4.9.16 DL/PL: Check the "FCG meeting required on original FMP?" "Yes" box in Section 1 of Form-1953.

4.9.17 DL/PL: Sign the DL/PL block in Section 5 of Form-1953.

4.9.18 DL/PL: Provide Form-1953 to the following for review and adequacy to proceed to FCG:

- SE/CSE
- NFM
- Engineering manager.

NOTE: *The CSE performs steps identified as SE/CSE when a Vital Safety System, as defined in PLN-CD&M-001, is affected.*

4.9.19 SE/CSE: **WHEN** satisfied that Section 1 of Form-1953 is complete and adequate,
THEN sign in Section 5 of Form-1953.

4.9.20 NFM: Review FMP revision package for completeness and accuracy to proceed to FCG.

4.9.20.1 **WHEN** satisfied,
THEN initial in Section 5 of Form-1953 indicating approval to proceed to FCG.

4.9.21 Engineering Manager: Review FMP revision package for completeness and accuracy to proceed to FCG.

4.9.21.1 **WHEN** satisfied,
THEN initial in Section 5 of Form-1953 indicating approval to proceed to FCG.

4.9.22 FCG Chair: Determine if it is necessary to reconvene the FCG or if approval may be obtained from each represented organization individually.

4.9.23 DL/PL: **IF** the FCG does NOT require reconvening,
THEN obtain concurrence from each group represented on the original FCG
AND THEN GO TO Step 4.9.30
WITHOUT RETURNING TO this step.

4.9.24 FCG Chair: Ensure makeup of the FCG contains representatives from each organization represented on the original FCG.

4.9.25 FCG Recorder: Perform the following:

4.9.25.1 Schedule the FCG meeting for those attendees identified by the FCG chair.

4.9.25.2 Enter the FCG meeting number in Section 5 of Form-1953.

4.9.25.3 Provide copies of completed Form-1057 and Form-1953 to each invitee as identified by the FCG chair for review prior to the scheduled FCG meeting.

NOTE: *Minutes should note in particular any identified design criteria and action items.*

4.9.25.4 Take minutes of FCG meeting, including recording any required actions.

NOTE: *If unable to attend, a substitute for the DL/PL may be specified by management.*

4.9.26 DL/PL: Present the FMP revision and any supporting documentation.

4.9.27 DL/PL: **IF** the FCG requires additional work of any sort before approval, **THEN** perform the following:

4.9.27.1 Complete the requirements as documented on the meeting minutes.

NOTE: *The FCG chair will determine if additional review is required by the FCG.*

4.9.27.2 Resubmit Form-1953 to the FCG, as required.

4.9.28 FCG Members: Approve, reject, or request changes to the FMP prior to approval.

4.9.28.1 **WHEN** satisfied that all concerns have been addressed, **THEN** sign in Section 5 of Form-1953.

4.9.29 FCG Recorder: Provide copies of meeting minutes to each attendee.

4.9.30 Environmental: If necessary, complete an environmental checklist (Form-1056) for the FMP revision.

4.9.31 Environmental: Complete Section 2 of Form-1953.

4.9.31.1 Enter the Environmental Checklist number in Section 2 of Form-1953.

4.9.31.1.1 **IF** no checklist is required,
THEN enter "None" in the Environmental Checklist No. space.

4.9.31.2 Describe additional actions required for implementation of the FMP, if any.

4.9.31.2.1 For any items identified in Section 2 of Form-1953, identify an AI in TrackWise **AND** document the AI number.

4.9.31.3 **IF** none,
THEN enter "None."

4.9.31.4 Sign in Section 2 of Form-1953.

4.9.32 Engineering Manager: Perform a USQ process applicability review.

4.9.32.1 **IF** the FMP involves a building or any SSCs within a building listed in LST-NSPC-03,
THEN perform the following steps:

4.9.32.1.1 Mark the check box in the USQ Applicability Review section on Form-1953 indicating that the FMP does not apply to the USQ process.

4.9.32.1.2 Sign and date the signature line.

4.9.32.2 **IF** the FMP does **NOT** involve a building or any SSCs within a building listed in LST-NSPC-03,
THEN perform the following:

4.9.32.2.1 Request that a USQ evaluator perform a USQ evaluation.

4.9.33 USQ Evaluator: Perform a USQ evaluation per MP-NSPC-3.2.

4.9.34 USQ Evaluator: Record the applicable USQ Categorical Exclusion Review number or USQ Determination number in Section 3 of Form-1953.

4.9.35 USQ Evaluator: Sign and date the signature line.

NOTE: *For FMP revisions that did not require an FCG meeting, the Engineering manager signs for revision approval.*

4.9.36 FCG Chair/Engineering Manager: Review FCG meeting minutes (if any) and ensure all comments (if any) have been satisfactorily resolved.

4.9.37 FCG Chair/Engineering Manager: **IF** a USQ does **NOT** exist **AND** all comments from FCG meeting (if any) are complete, **THEN** complete Section 4 of Form-1953.

4.9.38 DL/PL: Markup Form-1057 with the approved changes.

4.9.39 DL/PL: Attach Form-1953 to Form-1057.

4.9.40 DL/PL: Forward Form-1953, Form-1057, and any attachments to EDC for retention in accordance with MP-CD&M-11.9.

4.10 FMP Implementation – Field Implementation

4.10.1 Responsible Manager: Carry out all necessary actions to complete and implement the FMP, including addressing identified impacts.

4.10.1.1 Ensure that any specified prerequisite activities are completed prior to field implementation.

4.10.1.2 Ensure that any document changes identified in Section 4.3.1 on Form-1057 as “necessary prior to field implementation” are complete prior to field implementation.

4.10.1.3 Ensure that all documents required for work initiation identified in Section 4.4.1 of Form-1057 are complete and approved in accordance with applicable procedures prior to field implementation.

4.10.1.4 Ensure that any pre-modification training requirements identified in Section 4.6 of Form-1057 are completed prior to field implementation.

4.10.2 Responsible Manager: Ensure that implementing documents (e.g., work request/work order) are processed, in support of FMP implementation, in accordance with applicable procedures.

4.10.3 Responsible Manager: Sign in Section 9 of Form-1057 indicating all prerequisites, document and drawing changes, and identified training prior to field implementation are complete.

4.10.4 DL/PL: Ensure that Section 10 of Form-1057 is updated as actions are completed.

4.11 FMP Cancellation

NOTE: *The DL/PL may cancel the proposed change at any time prior to implementation (as directed by management).*

4.11.1 DL/PL: Obtain concurrence from the NFM (or designee) to cancel the FMP.

4.11.2 DL/PL: Complete the Cancellation portion of Section 10 of Form-1057.

4.11.3 NFM or designee: Sign Section 1 of Form-1057, indicating cancellation.

4.11.4 DL/PL: Return the cancelled FMP to EDC for retention in accordance with MP-CD&M-11.9.

4.12 FMP Completion

4.12.1 DL/PL: Mark the N/A block in the Cancellation portion of Section 10 of Form-1057.

4.12.2 DL/PL: **WHEN** change has been field implemented, all impacted areas have been appropriately addressed, and all associated document and drawing changes are complete,
THEN complete the Completion portion of Section 10 of Form-1057.

4.12.2.1 Ensure all requirements from permits, waste acceptance criteria, etc., are carried through to completion including during document/procedure modification.

4.12.3 Responsible Manager: Review the FMP in its entirety for completeness, accuracy, and the following:

- Instructions and documentation identified in Section 4.3 of Form-1057 have been completed/modified and implemented
- Drawings/datasheets and other design documents identified in Section 4.4 of Form-1057 have been completed/revised
- All required acceptance tests and/or inspections identified in Section 4.5 of Form-1057 have been completed satisfactorily
- All training required for operation with the modification as identified in Section 4.6 of Form-1057 has been completed satisfactorily.

4.12.4 NFM or designee: Review the FMP in its entirety for completeness and accuracy.

4.12.5 NFM or designee: Sign Section 1 of Form-1057, indicating completion.

4.12.6 DL/PL: Take the completed FMP to EDC for retention in accordance with MP-CD&M-11.9.

5.0 DEFINITIONS

Configuration management. The process of (1) identifying and defining the baselines associated with a software product or application; (2) controlling the changes to baselines and release of baselines throughout the lifecycle; (3) recording and reporting the status of baselines and the proposed and actual changes to the baselines; and (4) verifying the correctness and completeness of a product baseline.

Designated lead/project lead. An individual assigned by management, whose responsibility is to ensure that all aspects of a change are properly completed and implemented.

Facility modification. Any permanent change or addition to SSCs, software, or operational processes that are part of the plant's current technical baseline. This includes any changes that may affect Industrial Safety or Radiological Controls, or changes to equipment configuration that may not be covered by the technical baseline.

Originator. Person who is proposing the change.

Structures, systems, and/or components. Structures are elements that provide support or enclosure, such as buildings, freestanding tanks, basins, dikes, and stacks. Systems are collections of components assembled to perform a function, such as piping, cable trays, conduit, or heating, ventilation, and air conditioning. Components are items of equipment, such as pumps, valves, relays, or elements of a larger array, such as computer software, lengths of pipe, elbows, or reducers.

Technical baseline. The documentation that defines the design, operations, and maintenance requirements or depicts the physical configuration of an SSC, such as the Documented Safety Analysis, Technical Safety Requirements, technical and functional requirements, specifications, and drawings. A technical baseline may have all, some, or more documentation than that identified in this definition.

6.0 REFERENCES

(1) AMWTP HWMA/RCRA Permit

(2) AMWTP HWMA/RCRA Interim Status Document

(3) DOE O 426.2, Personnel Selection, Training, Qualification, and Certification Requirements for DOE Nuclear Facilities

(4) Form-1056, Environmental Checklist

(5) INST-CD&M-11.1.3, Approved Equivalent Parts

(6) INST-CD&M-11.2.5, Integrated Control System Software Modifications

(7) LST-NSPC-03, Unreviewed Safety Question Process Applicability – Facilities

(8) MP-CD&M-11.1, Change Control

(9) MP-CD&M-11.2, Software Quality Assurance

(10) MP-CD&M-11.9, Control of Engineering Documents/Records

(11) MP-CD&M-11.16, Davis-Bacon Act Implementation Plan

(12) MP-COPS-9.18, Work Management, Planning, and Control

(13) MP-DOCS-18.2, Records Management

(14) MP-DOCS-18.4, Document Control

(15) MP-EC&P-7.9, Environmental Checklist/National Environmental Policy Act Documentation Procedure

(16) MP-NSPC-3.2, Unreviewed Safety Question Process

(17) PD-CMNT-01, Nuclear Maintenance Management Program Description

(18) PLN-CD&M-001, System Engineer Program

(19) RPT-CD&M-02, Technical Design Requirements

(20) RPT-DSA-02, Documented Safety Analysis

(21) RPT-TSR-03, Technical Safety Requirements

7.0 RECORDS

Records generated by this procedure are classified in accordance with the table below and dispositioned in accordance with MP-DOCS-18.2, Records Management.

Record Description	Classification
INST-CD&M-11.1.2, Case File	Misc. Other Record/A16-1.2/Destroy 5 years after submittal or being superseded
Form-1057, Facility Modification Proposal	Facility Operating Record/ENV2-a-1-a/Destroy 5 years after life of facility
Form-1953, Facility Modification Proposal Revision Sheet	Facility Operating Record/ENV2-a-1-a/Destroy 5 years after life of facility

8.0 EXHIBITS

None

9.0 APPENDICES

Appendix A – Revision Log

Appendix A – Revision Log

Revision Number	Date Approved	Pages Affected	Description of Revision
0	8/15/2002	All	Initial issue. DCR-2002-1316
0 FC-1	9/16/2002	All	Minor change to Effective Date, DCR-2002-1502
1	11/18/2002	5, 6, 7, 8, 9, 10, 15 and 19	DCR-2002-1476
2	7/2/03	All	Re-issue, see DCR-2003-2107
3	11/11/03	All	Incorporate comments identified during a self-assessment, see DCR-2003-2465.
4	4/8/04	All	Correct discrepancies between this and other related procedures, see DCR-2004-2780.
5	6/1/06	All	See DCR No. 4896. Merge Facility Change Screen and Facility Modification Proposal processes and associated forms. Eliminate procedure INST-CD&M-11.1.1, and Form-1148. Complete rewrite of Section 4.0. Apply Blue Sheet changes.
6	10/08/07	2, 7, 8, and 10	DCR-6450. Add responsibility to DP/PL for portable equipment code compliance to satisfy CAR-28395. Add Training representative to the FCG quorum. Update records section.
7	01/07/09	Various	DCR-7327. Changed Note for Step 4.3.9 as part of USQ process implementation. Made editorial changes per MP-DOCS-18.1, Developing Written Work Instructions, including moving the revision log to an appendix.
8	03/24/09	Various	DCR-8112. Add a new Step 4.2.1.3.1 and incorporate BLUESHEET-03.
9	07/07/09	All	DCR-8425. Periodic review date due. Roll rev and periodic review date.

AMWTP OPERATING INSTRUCTIONS		
INST-CD&M-11.1.2, Rev. 15	Issued: 02/27/14	Effective: 02/28/14

Facility Modification Proposal Preparation

Revision Number	Date Approved	Pages Affected	Description of Revision
10	06/30/10	All	DCR-8973. Complete rewrite to revise existing FMPs and so that forms implemented by this document are consistent. Incorporated changes to ensure independent design input reviews are performed as required by CAR 51614. Provided guidance and a more direct interface to ensure Scope and Technical Requirements are recognized during review and validation of procedure revisions as required by CAR-48277.
11	01/13/11	Various	DCR-9575. Incorporated document to resolve CARs 54791 and 54318.
12	07/11/12	Various	DCR-11147. Incorporated changes as required by CAR 69387. Clarified available options with Environmental checklists. Incorporated new USQ process implementation changes.
13	09/04/12	Various	DCR-11528. Incorporated DOE O 426.2 changes.
14	09/03/13	Various	DCR-12426. Response to MAR-75507. Incorporated DOCS-BLUESHEET-11.
15	02/27/14	Various	DCR-12964. Corrected titles to LST-NSPC-03 in body of document and in reference section. Added LLW Certification Official to Step 4.5.5 (B), Optional Members.

Software Version Control

(General Use)

Advanced Mixed Waste Treatment Project

Approval:

(Signature on file. See DCR-12792.) 10/02/13

Date

AMWTP OPERATING INSTRUCTIONS		
INST-CD&M-11.2.1, Rev. 9	Issued: 10/02/13	Effective: 10/03/13

Software Version Control

REVISION LOG

Revision Number	Date Approved	Pages Affected	Description of Revision
0	08/15/2002	All	Initial issue. DCR-2002-1331
1	3/28/2003	All	DCR-2164 change effective from "When DOE Approves Retrieval Operations" to 3/28/03.
2	7/11/2003	All	DCR-2349 change to provide consistency with recent updates to MP-CD&M-11.2 Rev.4
3	28/Apr/04	All	DCR 2424- Update records table per WIPP Audit Comments, Update to provide consistency with recent updates to MP-CD&M-11.2 Rev 5
4	5/Oct/04	6	DCR 3233 - Remove **http://orion/vminet.html** from Paragraph 1, Bullet 1 and Paragraph 2, Bullet 1 DOE ORR Observation
5A	3/21/05	All	Incorporate corrective actions from CBFO Audit A-05-08, see DCR-2005-4185.
5B	3/31/05	All	Incorporate CBFO comments from DRR 05-0850, see DCR-2005-4185-1.
6	5/31/06	All	DCR-4299. Incorporate Blue Sheet changes and minor editorial changes.
7	07/25/07	Various	DCR-6131. To add Software Engineers to System Engineers throughout document; clarification of various steps and performers; remove references to superseded documents; add missing definitions. Periodic review update.
8	11/05/12	Various	DCR-11797. Incorporated ITG-BLUESHEET-244 and updated document owner.
9	10/02/13	Various	DCR-12792. Incorporated CBFO audit comments. No other changes made at this time.

TABLE OF CONTENTS

1.0 PURPOSE/SCOPE 1

2.0 ROLES AND RESPONSIBILITIES 1

3.0 PRECAUTIONS AND LIMITATIONS/PREREQUISITES 2

3.1 Precautions and Limitations 2

3.2 Prerequisites 2

4.0 INSTRUCTIONS 2

4.1 AMWTP Developed *Class-I and II Software* (see def.) 2

4.2 AMWTP Developed *Class-III Software* (see def.) 5

4.3 Vendor-Developed Software 6

5.0 DEFINITIONS 7

6.0 REFERENCES 8

7.0 RECORDS 9

8.0 EXHIBITS 9

9.0 APPENDICES 9

AMWTP OPERATING INSTRUCTIONS		
INST-CD&M-11.2.1, Rev. 9	Issued: 10/02/13	Effective: 10/03/13

Software Version Control

1.0 PURPOSE/SCOPE

This instruction describes the process to be used to accomplish software version control using the *PVCS* (see def.) system. This process is an adjunct to the System Change Request (SCR) process described in MP-CD&M-11.2, Software Quality Assurance. This procedure provides instructions for both Advanced Mixed Waste Treatment Project (AMWTP)-developed and *Vendor–developed software* (see def.).

This document provides step-by-step instructions for maintaining the software version control system. Although the directed steps must be performed as stated, signoff of step performance or having the instruction at hand as steps are performed is not required.

2.0 ROLES AND RESPONSIBILITIES

Performer	Responsibilities
System Engineer	• Provides guidance to software engineers as needed regarding the design operation of mechanical system affected by software changes.
System Manager	• Oversees IT network, ICS, or Data Management systems components
Software Engineer	• Maintains IT network, ICS, or Data Management systems components overseen by the System Manager(s).
Test Engineer	• Performs validation tests independent of code development or code changes. • Obtains testing certification in accordance with MP-Q&SI-5.8, Qualifying Test Engineers, Supply Chain Inspectors, Auditors, Lead Auditors, and Technical Specialists.
Software Administrator	• Controls electronic software program files such as SCRs and SDCRs.
Software Librarian	• Checks in the new vendor-supplied software into storage. • Keeps an inventory of software in storage. • Controls the check out of software in storage.

Performer	Responsibilities
Database Administrator	• Individual identified to perform installation of approved code to production.

3.0 PRECAUTIONS AND LIMITATIONS/PREREQUISITES

3.1 Precautions and Limitations

None.

3.2 Prerequisites

None.

4.0 INSTRUCTIONS

4.1 AMWTP Developed *Class-I and II Software* (see def.)

4.1.1 *System Engineer* (see def.)/*Software Engineer* (see def.): Perform the following:

NOTE: *PVCS will not allow software modules that are locked to be checked out.*

4.1.1.1 Check out the required software module from PVCS.

4.1.1.2 Update the SCR with the following information:

- Software module name
- Software module *version* (see def.) number

4.1.1.3 Complete software modifications and unit testing as necessary to meet SCR requirements.

NOTE: *PVCS automatically advances the version number each time software modules are checked in.*

4.1.1.4 Check in the software module to PVCS.

4.1.1.4.1 Lock the developed software module within PVCS.

4.1.1.5 Update the SCR with the following information:

- Software module name
- Software module version number

4.1.1.6 Promote the SCR to testing.

4.1.1.7 **IF** notified by the *Test Engineer* (see def.) that testing has failed,
THEN repeat Steps 4.1.1.1 through 4.1.1.6 until testing is successful.

4.1.1.8 Test Engineer: Review the SCR regarding modules to be tested and perform the following:

4.1.1.8.1 Retrieve a read-only copy of the software module identified in the SCR and verify the versions match.

4.1.1.8.2 Record the copied software version(s) in the SCR.

4.1.1.8.3 Verify that software modules in the test setup, except for the versions under test, are the same version as those in production.

4.1.1.8.4 Complete testing in accordance with established procedures and instructions.

4.1.1.8.5 Update the SCR to reflect software testing has either passed or failed.

4.1.1.8.6 Complete the necessary SCR documentation and attach test documentation and any objective evidence to the SCR.

4.1.1.8.7 **IF** testing passes,
THEN notify the System Engineer/Software Engineer.

4.1.1.9 System Engineer/Software Engineer: Ensure the tested software module is unlocked within PVCS.

4.1.2 *Software Administrator* (see def.): When testing has been completed satisfactorily and approvals are complete, assign software to a *software build* (see def.).

4.1.2.1 Attach any supporting documentation for the approvals to the SCR.

4.1.3 System Engineer/Software Engineer/*Database Administrator* (see def.): Perform the following:

4.1.3.1 Obtain a copy of the software module associated with the build identified by a "build number" label.

4.1.3.2 Obtain a copy of all other software modules identified by the "Prod" label as required.

4.1.3.3 Produce a listing of all software modules that have been copied from PVCS.

4.1.3.4 Verify the correct file versions have been retrieved for the *software build/system download* (see def.).

4.1.3.5 Perform the software build/system download.

4.1.3.6 Verify the software build/system download was performed correctly.

4.1.3.7 Update the Production software build/system download log.

4.1.4 Software Administrator: Update the PVCS software label to reflect the software build/system download.

4.2 AMWTP Developed *Class-III Software* (see def.)

4.2.1 System Engineer/Software Engineer: Perform the following:

4.2.1.1 Check out the required software files from PVCS.

4.2.1.2 Update the SCR with the following information:

- Software file names
- Software file version numbers

4.2.1.3 Complete software modifications and testing as necessary to meet SCR requirements.

NOTE: *PVCS automatically advances the version number each time software modules are checked in.*

4.2.1.4 Check in the software files into PVCS.

4.2.1.5 Update the SCR with the following information:

- Software file name
- Software file version number

4.2.1.6 Promote the SCR to testing.

4.2.1.7 **IF** notified by the Test Engineer that testing has failed, **THEN** repeat Steps 4.2.1.2 through 4.2.1.6 until testing is successful.

4.2.1.8 Load the SCR to plant.

NOTE: *The Test Engineer performing Step 4.2.2 must be someone other than the SCR originator/implementer.*

4.2.2 Test Engineer: Review the SCR regarding online test instructions, and perform the test online in accordance with instructions in the SCR.

4.3 Vendor-Developed Software

4.3.1 System Engineer/Software Engineer: Initiate an SCR and applicable change control documentation in accordance with MP-CD&M-11.1, Change Control, for vendor software.

4.3.1.1 Procure Vendor software based on SCR and associated documentation.

4.3.2 Test Engineer: Perform any on-plant software verification and validation as required by the AMWTP software QA program before final software update to PVCS.

4.3.3 System Engineer/Software Engineer: Receive Vendor-supplied software and software verification and validation documentation in accordance with Vendor software QA program.

NOTE: *Software must be received by procurement contract personnel and logged against appropriate PO.*

4.3.3.1 Verify Vendor software documentation is complete.

4.3.4 *Software Librarian* (see def.): Check in the new Vendor-supplied software into storage.

4.3.5 System Engineer/Software Engineer: Check out the new Vendor-supplied software from the software librarian and install via work control process.

4.3.5.1 Promote the SCR to testing.

4.3.5.2 **IF** notified by the Test Engineer that the test has failed, **THEN** repeat Step 4.3.2 until test is successful.

4.3.6 Test Engineer: Review the SCR regarding modules to be tested and perform the following:

4.3.6.1 Retrieve a read-only copy of the software module identified in the SCR and verify the versions match.

4.3.6.2 Record the copied software version(s) in the SCR.

4.3.6.3 Verify that software modules in the test setup, except for the versions under test, are the same version as those in production.

4.3.6.4 Complete testing in accordance with established procedures and instructions.

4.3.6.5 Update the SCR to reflect software testing has either passed or failed.

4.3.6.6 Complete the necessary SCR documentation and attach test documentation and any objective evidence to the SCR.

4.3.6.7 Upon successful completion of testing, software is then checked back into the software librarian for storage.

4.3.7 Software Administrator: When testing has been completed satisfactorily and approvals are complete, assign software to a software build/system download.

4.3.7.1 Attach any supporting documentation for the approvals to the SCR.

4.3.7.2 Update the PVCS software label to reflect the software build/system download.

5.0 DEFINITIONS

Case File. A packet that contains information about each revision to a document with the information increasing as the document moves through the development process.

Class-I Software. Software equipment identified by the Documented Safety Analysis (DSA) as Safety Class or Safety Significant SSC. Class-I SSCs are those items whose failure present the highest potential safety consequence and project risk. Class-I SSCs are identified as Q-Listed SSCs, during construction/commissioning.

Class-II Software. Software equipment designated by the DSA as Other Items Important to Safety, by Statutory requirements, or functions to collect, reduce, manipulate or store data used in the characterization, certification, or transportation of waste by TRU programs, by WIPP requirements or certain Safety Equipment required by Permit, or where a failure could directly cause injury to personnel through a conventional or radiological means.

Class-III Software. All other process software equipment not considered Class-I or Class-II.

Database Administrator. The individual identified to perform installation of approved code to production.

PVCS. The Trade marked name of the software package used for the purposes of controlling versions of software applications at the AMWTP.

Software Administrator. The individual identified to act as the administrator for the version control and issues tracking software.

Software Build/System Download. The process of creating the application binaries for software which will be made available for release.

Software Engineer. The individual identified in the SCR as responsible for modifying the software.

Software Librarian. The individual identified to function as the gatekeeper of the software to insure current software versions are in place.

System Engineer. The individual identified in the SCR as responsible for modifying the software.

Test Engineer. The individual identified in the SCR as responsible for testing the software modification.

Vendor-Developed Software. Software developed by the Vendor using the Vendor's controls or BNFL's controls, as directed.

Version. A specific revision of a software module within a build/download.

6.0 REFERENCES

(1) MP-CD&M-11.2, Software Quality Assurance

(2) MP-CD&M-11.1, Change Control

(3) MP-DOCS-18.2, AMWTP Records Management

7.0 RECORDS

Records generated by this procedure shall be classified in accordance with the table below, and dispositioned in accordance with MP-DOCS-18.2, AMWTP Records Management.

Record Description	Classification
INST-CD&M-11.2.1, *Case File* (see def.)	Non-permanent/Quality
Test Track Pro SCRs Electronic Forms	Non-permanent QA

8.0 EXHIBITS

None

9.0 APPENDICES

None

Software Inventory Classification

(General Use)

Advanced Mixed Waste Treatment Project

Approval:

(Signature on file. See DCR-13673.) 08/19/14

Date

Verification of Effective Revision: (After verifying current revision, replace cover page on working copy if more space is needed.)

Initials	Date	Initials	Date	Initials	Date	Initials	Date

AMWTP INSTRUCTION		
INST-CD&M-11.2.2, Rev. 16	Issued: 08/19/14	Effective: 08/20/14
Software Inventory Classification		

TABLE OF CONTENTS

1.0 PURPOSE/SCOPE 1

2.0 ROLES AND RESPONSIBILITIES 2

3.0 PRECAUTIONS AND LIMITATIONS/PREREQUISITES 2

3.1 Precautions and Limitations....2

3.2 Prerequisites....2

4.0 INSTRUCTIONS....3

4.1 Performance Activities....3

5.0 DEFINITIONS....4

6.0 REFERENCES 5

7.0 RECORDS 5

8.0 EXHIBITS 5

9.0 APPENDICES 5

Appendix A – Baseline Inventory and Software Classification A1

Appendix B – Revision Log B1

AMWTP INSTRUCTION		
INST-CD&M-11.2.2, Rev. 16	Issued: 08/19/14	Effective: 08/20/14

Software Inventory Classification

1.0 PURPOSE/SCOPE

This instruction provides the direction and responsibilities for maintaining the computer *software* (see def.) inventory classification *baseline* (see def.) that is important to the operation of the AMWTP.

The requirements of this instruction apply to computer systems/software intended for the purpose of the collection, reduction, manipulation, and storage of data that supports the AMWTP. Software applications that have been identified by the Department of Energy (DOE) as Safety Design Codes, which include the DOE Safety Software Central Registry (also referred to as "analysis" or "tool box") codes (see LST-PAIT-02, DOE Safety Design and Safety Software Central Registry Codes), shall also be included. Software that supports safety significant systems and characterization of transuranic (TRU) waste is classified relative to its use in engineering, scientific, testing, data collection, design, analysis, and operations activities per MP-Q&SI-5.6, Graded Approach.

Software, which is an integral part of measuring and test equipment (M&TE), is exempt from the controls of this procedure when the M&TE are verified periodically as part of an analytical method validation or instrument calibration program. *Exempt software* (see def.) from this instruction are applications that are considered to be "systems software" (e.g., operating systems, administrative and management systems, utilities, compilers, word processors, etc.). Although the directed steps must be performed as stated, signoff of step performance or having the procedure at hand as steps are performed is not required.

The Baseline Inventory and Software Classification (Appendix A) and the *Polytron Version Control System* (PVCS*;* see def.) collectively provide the information required by DOE/CBFO-94-1012, Quality Assurance Program Document.

2.0 ROLES AND RESPONSIBILITIES

Performer	Responsibilities
Information Technology (IT) System Manager	• Responsible for the operation and maintenance of computer system aspects as outlined in Appendix A, including computer hardware, operating system software, network servers, and data routing components • Provides the information needed to maintain Appendix A • Responsible for non-Waste Tracking System (WTS) software applications.
WTS Manager	• Responsible for the operation and maintenance of WTS computer applications aspects as outlined in Appendix A • Provides the information needed to maintain Appendix A.
Integrated Control System (ICS) Manager	• Responsible for the operation and maintenance of ICS computer applications aspects as outlined in Appendix A • Provides the information needed to maintain Appendix A.
System Engineer	• Determines the software classification (Appendix A) for each required software application. The classification criteria forms the basis for determining the applicable lifecycle documentation requirements based on the risk associated with the intended use of the software or computer system.

3.0 PRECAUTIONS AND LIMITATIONS/PREREQUISITES

3.1 Precautions and Limitations

None

3.2 Prerequisites

None

4.0 INSTRUCTIONS

4.1 Performance Activities

NOTE 1: *The requirements for software management are based on a software life cycle model for implementing a systematic approach to software development, procurement, and maintenance (see MP-CD&M-11.2, Software Quality Assurance). Software development will proceed in a traceable, planned, and orderly manner. The number of life cycle phases and relative emphasis placed on each phase of software development will depend on the nature and complexity of the software (i.e., its classification). For example, documentation for* Class I Software *(see def.) includes, as a minimum:*

- *User/system engineer requirements documentation*
- *Design and implementation documentation*
- *Verification and validation documentation*
- *Change documentation*
- *Problem reports*
- *Testing*
- *Installation and checkout*
- *Operations and maintenance*
- *Retirement.*

NOTE 2: *The* Baseline Inventory List *(see def.) and Baseline Inventory and Software Classification (see Appendix A) form the basis for determining the applicable life cycle documentation requirements based on the risk associated with the intended use of the software or computer system. While the system application code controlled at the AMWTP is included in Appendix A, versioning will be recorded and controlled through PVCS.*

NOTE 3: *The IT System Manager, the WTS Manager, the ICS Manager, and the System Engineer will perform activities in this instruction as applicable to their scope of work and/or as indicated in Appendix A. These performers will also provide information to maintain Appendix A, as necessary.*

4.1.1 Refer to Appendix A when acquiring, developing, and/or maintaining the applicable system's software.

4.1.2 As new information is received on software (e.g., version, new application, change in class), update Appendix A of this instruction and PVCS to reflect the change.

4.1.3 Maintain an inventory of all applicable software that identifies the software name, classification, exemption status, operating environment, and the person and organization responsible for the software. (This inventory is listed in Appendix A.)

4.1.4 Do not include exempt software in this list, except software included in LST-PAIT-02.

4.1.5 Record and control versioning through PVCS.

5.0 DEFINITIONS

Baseline. A product (computer program, documentation, or both) that has been formally reviewed and approved for use. The product thereafter serves as the basis for further development and can be changed only through formal change control procedures.

Baseline inventory list. A listing, developed per this instruction, that lists software by the Class I Software, *Class II Software* (see def.), or *Class III Software* (see def.) level and its user organizations.

Class I software. Software equipment identified by RPT-DSA-02, Documented Safety Analysis, as Safety Class or Safety Significant systems, structures, and components (SSC). Class-I SSCs are those items whose failure present the highest potential safety consequence and project risk. Class-I SSCs are identified as Q-Listed SSCs during construction/commissioning.

Class II software. Software equipment designated by the Documented Safety Analysis (DSA) as Other Items Important to Safety, by statutory requirements or functions to collect, reduce, manipulate, or store data used in the characterization, certification, or transportation of waste by TRU programs, Waste Isolation Pilot Plant requirements, or certain safety equipment required by permit; or where a failure could directly cause injury to personnel through a conventional or radiological means.

Class III software. All other process software equipment not considered Class I or Class II.

Exempt software. Software that is considered to be "systems or business software" (e.g., operating systems, administrative and management systems, system utilities, compilers, assemblers, translators, interpreters, query languages, word processing programs, spreadsheets, database managers, and graphing programs) or other software that does not generate data that are used in the formulation of conclusions.

Polytron Version Control System. The trademarked name of the software package used for the purposes of controlling versions of software applications at the AMWTP.

Software. Computer programs, procedures, rules, and associated requirements, design, test and user documentation pertaining to the operation of a computer system.

6.0 REFERENCES

(1) DOE-CBFO-94-1012, Quality Assurance Program Document

(2) LST-PAIT-02, DOE Safety Design and Safety Software Central Registry Codes

(3) MP-CD&M-11.2, Software Quality Assurance

(4) MP-DOCS-18.2, Records Management

(5) MP-Q&SI-5.6, Graded Approach

(6) RPT-DSA-02, Documented Safety Analysis

7.0 RECORDS

Records generated by this procedure are classified in accordance with the table below and dispositioned in accordance with MP-DOCS-18.2, Records Management.

Record Description	Classification
INST-CD&M-11.2.2, Case File	Nonpermanent WIPP/ENV1-J-1/Destroy 10 years after submittal

8.0 EXHIBITS

None.

9.0 APPENDICES

Appendix A – Baseline Inventory and Software Classification

Appendix B – Revision Log

AMWTP INSTRUCTION		
INST-CD&M-11.2.2, Rev. 16	Issued: 08/19/14	Effective: 08/20/14

Software Inventory Classification

Appendix A –
Baseline Inventory and Software Classification

Baseline Inventory and Software Classification									
	Software Name	**Inventory Control Responsibility**	**Configuration Responsibility**	**Class I**	**Class II**	**Class III**	**Business**	**Version**	**Operating Environment**
1.	**Fissile Tracking System (FTS)**	**Software Administrator/ Information Technology and Plant Automation Department**	**Doug Dinneen**						
	Altairis			X				Controlled through PVCS	Solaris 8
	FGE Mod Tool			X				Controlled through PVCS	Windows 2000
	FTS Barcode Utility			X				Controlled through PVCS	Windows 2000
	RADS Barcode Utility			X				Controlled through PVCS	Windows 2000
	Veritas Volume Manager Storage Administrator			X				Controlled through PVCS	Solaris 8
	Veritas Cluster Server Cluster Manager			X				Controlled through PVCS	Solaris 8
	Veritas Net Backup			X				Controlled through PVCS	Solaris 8

AMWTP INSTRUCTION

INST-CD&M-11.2.2, Rev. 16	Issued: 08/19/14	Effective: 08/20/14

Software Inventory Classification

Baseline Inventory and Software Classification

	Software Name	Inventory Control Responsibility	Configuration Responsibility	Class I	Class II	Class III	Business	Version	Operating Environment
2.	**Drum Assay (DAS)**	**Software Administrator/ Information Technology and Plant Automation Department**	**Doug Dinneen**						
	Genie 2000			X				Controlled through PVCS	Windows NT
	Genie 2000, MGA			X				Controlled through PVCS	Windows NT
	Genie 2000, MGAU			X				Controlled through PVCS	Windows NT
	Genie 2000, Quality Assurance			X				Controlled through PVCS	Windows NT
	Genie 2000, Gamma Analysis			X				Controlled through PVCS	Windows NT
	Canberra AMWTP Supervisor			X				Controlled through PVCS	Windows NT
	NDA 2000			X				Controlled through PVCS	Windows NT
3.	**Box Assay (RBAS)**	**Software Administrator/ Information Technology and Plant Automation**	**Doug Dinneen**						
	RBAS.exe			X				Controlled through PVCS	Windows XP SP 2
	RBAS PLC			X				Controlled through PVCS	Windows XP SP 2
	Box Assay Driver			X				Controlled through PVCS	Windows XP SP 2
	RBAS.gsq			X				Controlled through PVCS	Windows XP SP 2
	RBAS.vnv			X				Controlled through PVCS	Windows XP SP 2
	RBAS.box			X				Controlled through PVCS	Windows XP SP 2
	Maestro 32			X				Controlled through PVCS	Windows XP SP 2
	RWARS			X				Controlled through PVCS	Windows XP SP 2
	PC/FRAM			X				Controlled through PVCS	Windows XP SP 2

AMWTP INSTRUCTION

INST-CD&M-11.2.2, Rev. 16	Issued: 08/19/14	Effective: 08/20/14

Software Inventory Classification

Baseline Inventory and Software Classification

	Software Name	Inventory Control Responsibility	Configuration Responsibility	Class I	Class II	Class III	Business	Version	Operating Environment
4.	**Waste Tracking System (WTS)**	**Software Administrator/ Information Technology and Plant Automation Department**	**Jade Anderson**						
	Waste Tracking Application Code				X			Controlled through PVCS	Windows 2000 Server
5.	**RTR Imaging Transfer Application (RITA)**	**Software Administrator/ Information Technology and Plant Automation Department**	**Doug Dinneen**		X			Controlled through PVCS	Windows 7
	AMWTP Imaging Software				X			Controlled through PVCS	Windows NT
6.	**Head Space Gas/Drum Vent (Client and Server Software)**	**Software Administrator/ Information Technology and Plant Automation Department**	**Ron Todd**						
	Saturn				X			Controlled through PVCS	Windows 2000 Pro
7.	**Head Space Gas (System 221)**	**Software Administrator/ Information Technology and Plant Automation Department**	**Jade Anderson**						
	Head Space Gas Instrument				X			Controlled through PVCS	Windows 2000
	Head Space Gas Server				X			Controlled through PVCS	Windows 2000
	Head Space Gas Review Workstations				X			Controlled through PVCS	Windows 2000
	Agilent/CTI Macros				X			Controlled through PVCS	Windows 2000
	Enhanced ChemStation				X			Controlled through PVCS	Windows 2000

AMWTP INSTRUCTION

INST-CD&M-11.2.2, Rev. 16	Issued: 08/19/14	Effective: 08/20/14

Software Inventory Classification

Baseline Inventory and Software Classification

	Software Name	Inventory Control Responsibility	Configuration Responsibility	Class I	Class II	Class III	Business	Version	Operating Environment
8.	**Gas Generation Testing (GGT)**	**Software Administrator/ Information Technology and Plant Automation Department**	**Jade Anderson**						
	GGT Xcel				X			Controlled through PVCS.	Windows 2000 Pro
9.	**Core Sample (Server Software)**	**Software Administrator/ Information Technology and Plant Automation Department**	**Jerry Patterson**						
	DCSRS Controller				X			Controlled through PVCS	Windows 2000 Pro
10.	**Integrated Control System (ICS)**	**Software Administrator/ Information Technology and Plant Automation Department**	**Jerry Patterson**						
	Concept PLC Application					X		Controlled through PVCS	Windows 7
	Factory Link Server / Client Application					X		Controlled through PVCS	Windows 2008
11.	**Secondary Waste Packet Assay Monitor (SWPAM)**	**Software Administrator/ Information Technology and Plant Automation Department**	**Doug Dinneen**						
	PAM Application				X			Controlled through PVCS	Windows 2000 Pro, Service Pack 3
	PAM Formula				X			Controlled through PVCS	Windows 2000 Pro, Service Pack 3
	PAM GMX				X			Controlled through PVCS	Windows 2000 Pro, Service Pack 3
	Maestro				X			Controlled through PVCS	Windows 2000 Pro, Service Pack 3

AMWTP INSTRUCTION

INST-CD&M-11.2.2, Rev. 16	Issued: 08/19/14	Effective: 08/20/14

Software Inventory Classification

Baseline Inventory and Software Classification

	Software Name	Inventory Control Responsibility	Configuration Responsibility	Class I	Class II	Class III	Business	Version	Operating Environment
12.	**Squeezants Container Assay Monitor (SCAM)**	**Software Administrator/ Information Technology and Plant Automation Department**	**Doug Dinneen**						
	PAM Application				X			Controlled through PVCS	Windows 2000 Pro, Service Pack 4
	PAM Formula				X			Controlled through PVCS	Windows 2000 Pro, Service Pack 4
	PAM GMX				X			Controlled through PVCS	Windows 2000 Pro, Service Pack 4
	Maestro				X			Controlled through PVCS	Windows 2000 Pro, Service Pack 4
13.	**Special-Case Waste Packet Assay (SCWPAM)**	**Software Administrator/ Information Technology and Plant Automation Department**	**Doug Dinneen**						
	SCW.exe Application			X				Controlled through PVCS	Windows 2000 Pro, Service Pack 1
	SCW.exe Formula			X				Controlled through PVCS	Windows 2000 Pro, Service Pack 1
	SWC.gsq			X				Controlled through PVCS	Windows 2000 Pro, Service Pack 1
	SCW.glb			X				Controlled through PVCS	Windows 2000 Pro, Service Pack 1
	Maestro.exe			X				Controlled through PVCS	Windows 2000 Pro, Service Pack 1

AMWTP INSTRUCTION

INST-CD&M-11.2.2, Rev. 16	Issued: 08/19/14	Effective: 08/20/14

Software Inventory Classification

Baseline Inventory and Software Classification

	Software Name	Inventory Control Responsibility	Configuration Responsibility	Class I	Class II	Class III	Business	Version	Operating Environment
14.	**Special-Case Waste Packet Assay, Tru D Neutron Monitor**	**Software Administrator/ Information Technology and Plant Automation Department**	**Doug Dinneen**						
	PortablePackageMonitor			X				Controlled through PVCS	Windows NT 4.0, Service Pack 6
	PortablePackageMonitor.ini			X				Controlled through PVCS	Windows NT 4.0, Service Pack 6
15.	**RAWFS**	**Software Administrator/ Information Technology and Plant Automation Department**	**Doug Dinneen**	X				Controlled through PVCS	Solaris 8
16.	**RSS Primary Workstation**	**Software Administrator/ Information Technology and Plant Automation Department**	**Doug Dinneen**						
	9205 EMS Application Layer				X			Controlled through PVCS	Windows 2000 Pro, Service Pack 4
	9205 EMS Application LIS OME				X			Controlled through PVCS	Windows 2000 Pro, Service Pack 4
17.	**RSS Secondary Workstation**	**Software Administrator/ Information Technology and Plant Automation Department**	**Doug Dinneen**						
	9205 EMS Application Layer				X			Controlled through PVCS	Windows 2000 Pro, Service Pack 4
	9205 EMS Application LIS OME				X			Controlled through PVCS	Windows 2000 Pro, Service Pack 4
18.	**RSS Node Panels**	**Software Administrator/ Information Technology and Plant Automation Department**	**Doug Dinneen**						
	Node Panel Software				X			Controlled through PVCS	Windows 3000 Pro, Service Pack 4

AMWTP INSTRUCTION

INST-CD&M-11.2.2, Rev. 16	Issued: 08/19/14	Effective: 08/20/14

Software Inventory Classification

Baseline Inventory and Software Classification

	Software Name	Inventory Control Responsibility	Configuration Responsibility	Class I	Class II	Class III	Business	Version	Operating Environment
19.	**CIDAS**	**Software Administrator/ Information Technology and Plant Automation Department**	**Doug Dinneen**	X				Controlled through PVCS	N/A
20.	**NDA Review PCs**	**Software Administrator/ Information Technology and Plant Automation Department**	**Doug Dinneen**						
	Saturn				X			Controlled through PVCS	Windows XP SP 3
	NDA 2000			X				Controlled through PVCS	Windows XP SP 3
	Genie			X				Controlled through PVCS	Windows XP SP 3
	AMWTP BDR				X			Controlled through PVCS	Windows XP SP 3
	RBAS IPAN GEA			X				Controlled through PVCS	Windows XP SP 3
	Special-Case Waste Packet Assay Monitor			X				Controlled through PVCS	Windows XP SP 3
	RWARS			X				Controlled through PVCS	Windows XP SP 3
	PC/FRAM			X				Controlled through PVCS	Windows XP SP 3
21.	**WDS/WWIS Data Conversion Application Software**	**Software Administrator/ Information Technology and Plant Automation Department**	**Jade Anderson**		X			Controlled through PVCS	Windows 2000
22.	**Production Workstations (ICS/WTS)**	**Software Administrator/ Information Technology and Plant Automation Department**	**Jerry Patterson**		X			None	Windows 7
23.	**DCSRS Packet Assay Machine**	**Software Administrator/ Information Technology and Plant Automation Department**	**Doug Dinneen**		X			Controlled through PVCS	Windows 2000 Pro, Service Pack 1
24.	**MACCS2***	**Nuclear Safety**	**Kurt Zorn**			X		Controlled through PVCS	Windows 2000/XP

AMWTP INSTRUCTION		
INST-CD&M-11.2.2, Rev. 16	Issued: 08/19/14	Effective: 08/20/14

Software Inventory Classification

Baseline Inventory and Software Classification

	Software Name	Inventory Control Responsibility	Configuration Responsibility	Class I	Class II	Class III	Business	Version	Operating Environment
25.	**SGRS and WAGS (CCP)**	**Software Administrator/ Information Technology and Plant Automation Department**	**Doug Dinneen**						
	Genie 2000				X			Controlled through PVCS	Windows XP
	Genie MGA				X			Controlled through PVCS	Windows XP
	Genie MGAU				X			Controlled through PVCS	Windows XP
	Genie Quality Assurance				X			Controlled through PVCS	Windows XP
	Genie Gamma Analysis				X			Controlled through PVCS	Windows XP
	Genie Interactive Peak Fit				X			Controlled through PVCS	Windows XP
	NDA 2000				X			Controlled through PVCS	Windows XP
26	**IMBA***	**Radiation Controls**	**Ben Young**		X			Controlled through PVCS	Windows XP
27	**SKM Power Tools for Windows***	**Electrical Distribution System Engineer**	**Ron Todd**		X			Controlled through PVCS	Windows XP
28	**Cero Elements/Pro (formally Pro/Engineer)***	**Engineering**	**Ron Todd**				X	Controlled through PVCS	Windows XP
29	**MCNP**	**Criticality Safety**	**Kurt Zorn**			X		Controlled through PVCS	Windows XP
30	**AERMOD**	**Environmental**	**Chris Campbell**			x		Controlled through PVCS	Windows XP
31	**RadCalc***	**Transportation**	**Rachelle Hubler**			x		Controlled through PVCS	Windows XP

* Identified by DOE as either Safety Design and/or Safety Software Central Registry Codes (see LST-PAIT-02).

AMWTP INSTRUCTION		
INST-CD&M-11.2.2, Rev. 16	Issued: 08/19/14	Effective: 08/20/14
Software Inventory Classification		

Appendix B – Revision Log

Revision Number	Date Approved	Pages Affected	Description of Revision
0	8/30/2002	All	DCR-1452. Initial issue.
1	2/20/2003	All	DCR-2056. Changed title and add information for clarity
2	7/08/2004	Pages 5, 6, 7, 8-12	DCR-2420. New definition. 4.1.1 and 4.1.2 – updated Roles and Responsibilities for IT and DMS Manager. 4.2.2 - Clarified which software revision will be included in Baseline Inventory . Updated records section. Updated Appendix A.
3	3/31/05	All	DCR-3297. Incorporated self-assessment comments. Incorporated resolution to comments from CBFO DRR dated 2/8/05. Introduced use of PVCS electronic version control and implement corrective actions from CBFO Audit A-05-08. Incorporated DRR comments. from DCR-3297-2.
4	11/02/05	All	DCR-4548 - Reformat Revision Log and Roles and Responsibilities, updated References, minor editing, added HGAS Server/workstations to Appendix A, Item 7.
5	3/30/06	All	DCR-4921 Made Formatting Corrections to resolve CAR-21421.
6	07/26/07	Various, Appendix A	DCR-5821. Addition of RBAS IPAN GEN and Special-Case Waste Packet Assay Monitor (SCW-PAM) software to Item 20 in Appendix A. Editorial changes throughout to reflect current document standards and formatting.
7	08/07/08	Various	DCR-7182. Periodic review. Added MACCS2 to Appendix A. Minor editorial changes throughout.
8	07/14/09	Various	DCR-8035. Revised document to meet current processes and to clarify organizational responsibilities, including changes to Appendix A. Made editorial changes in accordance with MP-DOCS-18.1.

AMWTP INSTRUCTION		
INST-CD&M-11.2.2, Rev. 16	Issued: 08/19/14	Effective: 08/20/14

Software Inventory Classification

Revision Number	Date Approved	Pages Affected	Description of Revision
9	02/24/11	Various	DCR-9691. Revised to add five new codes to Appendix A, to formalize the use of LST-PAIT-02, and to make certain minor editorial corrections.
10	11/05/12	Various	DCR-11798. Incorporated ITG-BLUESHEET-244, DOCS-BLUESHEET-06, and updated document owner.
11	04/08/13	Various	DCR-12182. Added RITA software to Appendix A. Made minor editorial changes throughout.
12	05/22/13	Various	DCR-12284. Added AERMOD to software in Appendix A. Changed responsible party for some software in Appendix A. Periodic review.
13	07/02/13	Various	DCR-12460. Add RadCalc to Appendix A.
14	03/18/14	Various	DCR-13101. Changes incorporated to resolve CAR 83111 to identify responsible individual.
15	08/04/14	Appendix A	DCR-13514. Changes made to update Appendix A.
16	08/19/14	Appendix A, Lines 10, 22	DCR-13673. Made changes to support upgraded operating environment.

System Data Change Request

(General Use)

Advanced Mixed Waste Treatment Project

Approval:

(*Signature on file. See DCR-13079.*) 03/06/14

Date

Verification of Effective Revision: (After verifying current revision, replace cover page on working copy if more space is needed.)

Initials	Date	Initials	Date	Initials	Date	Initials	Date

AMWTP INSTRUCTION		
INST-CD&M-11.2.3, Rev. 9	Issued: 03/06/14	Effective: 03/07/14
System Data Change Request		

TABLE OF CONTENTS

1.0 PURPOSE/SCOPE 1

2.0 ROLES AND RESPONSIBILITIES 1

3.0 PRECAUTIONS AND LIMITATIONS/PREREQUISITES 2

3.1 Precautions and Limitations.....2

3.2 Prerequisites.....2

4.0 INSTRUCTIONS.....2

4.1 System Data Change Requests.....2

5.0 DEFINITIONS.....6

6.0 REFERENCES 7

7.0 RECORDS 7

8.0 EXHIBITS 7

9.0 APPENDICES 7

Appendix A – SDCR Flow Chart A1

Appendix B – Revision Log B1

AMWTP INSTRUCTION		
INST-CD&M-11.2.3, Rev. 9	Issued: 03/06/14	Effective: 03/07/14

System Data Change Request

1.0 PURPOSE/SCOPE

This instruction establishes requirements for maintaining the computer code tables and applying data fixes for all *Class II* (see def.) and *Class III* (see def.) *software* (see def.) that are important to the operation of the AMWTP. In addition, *Class I* (see def.) must use the formal System Change Request Procedure as identified in MP-CD&M-11.2, Software Quality Assurance, and will not be addressed in this procedure.

The requirements of this procedure apply to computer system/software intended for the purpose of the collection, reduction, manipulation, and storage of data supporting the AMWTP.

All AMWTP personnel and subcontractors who maintain or impact data used at AMWTP for waste characterization, certification, transportation, or operations are subject to the requirements within this procedure.

2.0 ROLES AND RESPONSIBILITIES

Performer	Responsibilities
Initiator	• Initiates a new *System Data Change Request* (SDCR; see def.) using the *change tracking system* (see def.).
System Administrator/ Designee	• Maintains the SDCR system, updates the code tables, controls codes required for data fixes, and maintains the change tracking system.
System Change Group (see def.)	• Evaluates new SDCRs to ensure they are properly classified and prioritized, and that the changes proposed within them will not have an adverse effect on safe, compliant operations.
System Manager	• Reviews and approves SDCRs.
Software Engineer	• Modifies data for approved SDCRs.
Quality Assurance Manager/Designee	• Reviews and approves SDCRs to ensure compliance with AMWTP Quality Assurance Program.
Unreviewed Safety Question (USQ) Evaluator	• Completes the USQ process for the proposed changes and any additional changes made after the USQ process.
Transuranic (TRU) Programs Manager	• Reviews and approves SDCRs to ensure compliance with TRU Program requirements.

Performer	Responsibilities
Software Test Engineer	• Performs validation test data changes to verify that changes comply with the SDCR and have been correctly implemented.

3.0 PRECAUTIONS AND LIMITATIONS/PREREQUISITES

3.1 Precautions and Limitations

None

3.2 Prerequisites

None

4.0 INSTRUCTIONS

4.1 System Data Change Requests

NOTE: *SDCRs are intended to track changes to existing* baseline *(see def.) software code tables or the correction of existing data. New code tables or changes requiring procedure or form updates should be implemented per MP-CD&M-11.2 and will not be addressed in this instruction.*

4.1.1 Raising SDCRs

NOTE: *The information entered into the Problem Description field should include a brief description of the customer's intent (e.g., e-mail), a description of the problem, and a description of the desired outcome*.

4.1.1.1 Initiator: Upon identification of a change as defined in this instruction, initiate a new SDCR using the change tracking system.

4.1.1.1.1 Ensure the SDCRs have enough information that the approvers, developers, and testers understand the customer's intent of the change.

4.1.1.1.2 Ensure the change contains a statement from the customer, preferably an email with the requirements and/or objectives of the requested change.

4.1.1.1.2.1 Ensure any analysis or investigation by WTS personnel refers to the customer's intent.

4.1.1.2 System Administrator/Designee: Review the SDCR and assign it to the System Change Group for approval.

NOTE 1: *SDCRs are not required to have a* software change screening *(SCS; see def.) completed.*

NOTE 2: *SDCRs done on a Class II or III system require a review by a* cognizant system engineer *(CSE; see def.) or system engineer. The review should be performed by the assigned CSE when a vital safety system is affected.*

4.1.2 Approving SDCRs

4.1.2.1 System Change Group: Review and approve the SDCR for compliance and assign it back to the system administrator for promotion.

4.1.2.2 **IF** more information is required,
THEN assign the SDCR back to the initiator.

4.1.3 Implementing SDCRs

4.1.3.1 System Administrator/Designee: Ensure all required approvals for the SDCR are complete.

4.1.3.2 Data Fixes

4.1.3.2.1 System Administrator/Designee: Assign SDCR Data Fixes to a software engineer for implementation.

4.1.3.2.2 Software Engineer: Perform the following:

4.1.3.2.2.1 Update the SDCR Implementation.

4.1.3.2.2.2 Validate Description Fields.

4.1.3.2.2.3 Implement the Data Fix.

4.1.3.2.2.4 Assign the SDCR for validation.

4.1.3.2.2.5 Provide the required code to the system administrator/designee for code control.

4.1.3.3 Code Table Updates

4.1.3.3.1 System Administrator/Designee: Update the SDCR Implementation and Validation Description fields.

4.1.3.3.2 System Administrator or Software Engineer: Implement code table changes, and assign the SDCR for validation.

4.1.4 Validating SDCRs

4.1.4.1 Software Test Engineer: Validate the SDCR change in accordance with the validation description details provided by the software engineer.

4.1.4.1.1 Update the Validation Description field to indicate testing details and test outcome (i.e., Test Passed, Test Failed).

4.1.4.1.2 **IF** the validation passes,
THEN assign the SDCR to USQ review.

NOTE 1: *A sufficient description of the software changes is needed in order for a valid USQ to be performed. Additional changes made subsequent to the USQ review will require the USQ review to be re-performed.*

NOTE 2: *If a USQ evaluation reveals that a USQ exists (i.e., positive USQ determination), then either DOE approves an amendment to the Safety Basis in accordance with MP-NSPC-3.2, Unreviewed Safety Question Process, or the change is revised such that a USQ does not exist prior to implementing this change.*

4.1.4.2 USQ Evaluator: Complete the USQ process for the proposed change.

4.1.4.2.1 Attach the USQ document to the SDCR.

4.1.4.2.2 Provide a comment referencing the USQ number.

4.1.4.3 Software Test Engineer**: IF** the validation failed, **THEN** assign the SDCR back to the software engineer for correction.

4.1.5 Rejecting SDCRs

4.1.5.1 System Change Group: **IF** the SDCR is unacceptable, **THEN** update the SDCR to indicate rejection and assign it back to the system administrator.

4.1.5.2 System Administrator/Designee: Using the change tracking system, notify previous approvers the SDCR is being rejected.

4.1.6 Closing SDCRs

4.1.6.1 System Administrator/Designee: Perform the following:

4.1.6.1.1 Enter code for Data Fixes into *PVCS* (see def.).

4.1.6.1.2 Prepare code for the regularly scheduled patch.

4.1.6.1.3 Update the SDCR Implementation field.

4.1.6.1.4 Close the SDCR.

5.0 DEFINITIONS

Baseline. A product (computer program, documentation, or both) that has been formally reviewed and approved for use. The product thereafter serves as the basis for further development, and that can be changed only through formal change control procedures.

Case file. A packet that contains information about each revision to a document with the information increasing as the document moves through the development process.

Change Tracking System. An electronic commercial application (Test Track Pro) used by the Information Technology Development and Maintenance groups to track and manage the SDCR process for maintenance changes.

Class I software. Software equipment identified by the Documented Safety Analysis (DSA) as Safety Class or Safety Significant systems, structures, and components (SSC). Class-I SSCs are those items whose failure present the highest potential safety consequence and project risk. Class-I SSCs are identified as Q-Listed SSCs, during construction/commissioning.

Class II software. Software equipment designated by the DSA as Other Items Important to Safety, by statutory requirements, or functions to collect, reduce, manipulate, or store data used in the characterization, certification, or transportation of waste by TRU Programs, by Waste Isolation Pilot Plant (WIPP) requirements or certain Safety Equipment required by Permit, or where a failure could directly cause injury to personnel through a conventional or radiological means.

Class III software. All other process software equipment not considered Class I or Class II.

Cognizant system engineer. A CSE is designated for each Vital Safety System. The CSE provides support to ensure continued operational readiness of the system, effective configuration management, and input to development and test procedures.

PVCS. The trademarked name of the software package used for the purposes of controlling versions of software applications at the AMWTP.

Software. Computer programs, procedures, rules, and associated requirements, design, test and user documentation pertaining to the operation of a computer system.

Software change screening. A document used to evaluate software changes and determine if the change needs to be further evaluated as a facility modification proposal (FMP).

System change group. A team comprised of the chairperson (applicable system manager) and representatives from applicable organizations, based on the software classification, to review for impact to safety; WIPP requirements, and various permits required to operate the AMWTP.

System Data Change Request (SDCR). The mechanism used to track changes to existing characterization data or a change to baseline software code tables.

6.0 REFERENCES

(1) MP-CD&M-11.2, Software Quality Assurance

(2) MP-DOCS-18.2, Records Management

(3) MP-NSPC-3.2, Unreviewed Safety Question Process

7.0 RECORDS

Records generated by this procedure are classified in accordance with the table below and dispositioned in accordance with MP-DOCS-18.2, Records Management.

Record Description	Classification
INST-CD&M-11.2.3, *Case File* (see def.)	Facility Operating Record/ENV2-a-1-a/Destroy 5 years after Life of Facility
Test Track Pro SDCRs Electronic Forms	Facility Operating Record/ENV2-a-1-a/Destroy 5 years after Life of Facility

8.0 EXHIBITS

None

9.0 APPENDICES

Appendix A – SDCR Flow Chart

Appendix B – Revision Log

Appendix A – SDCR Flow Chart

NOTE: *The following is an example of the flow path for an SDCR generated for data changes to an existing system. Specific steps may vary, depending upon the complexity of the changes, as specified within the body of this procedure.*

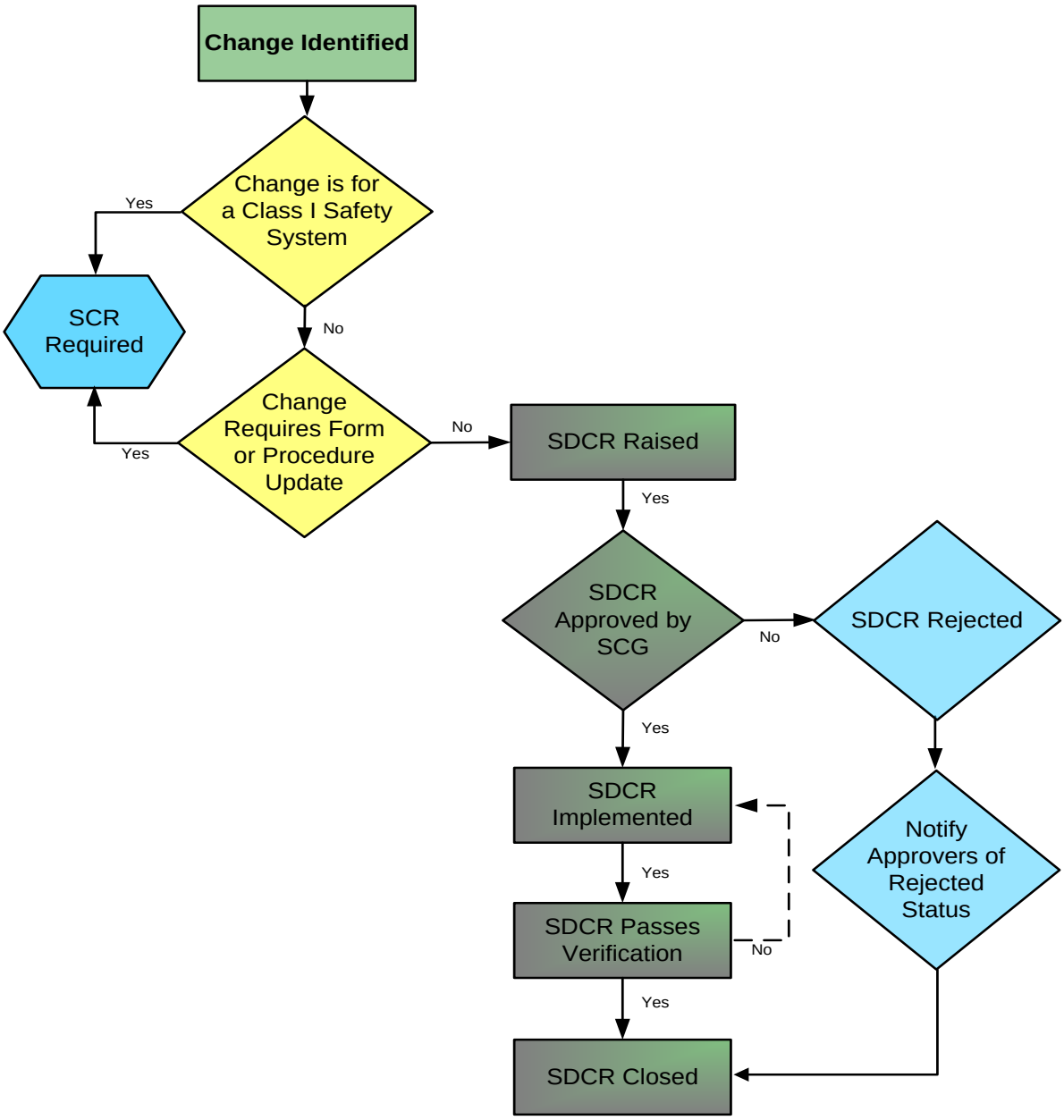

Appendix B – Revision Log

Revision Number	Date Approved	Pages Affected	Description of Revision
0	04/28/04	All	DCR-2420. Initial issue.
1A	3/21/05	All	Incorporate corrective actions from CBFO Audit A-05-08, see DCR-2005-4185.
1B	3/31/05	All	Incorporate comments from CBFO DRR 05-0850, see DCR-2005-4185-1.
2	04/05/05	TOC and Section 4.2	See DCR-4250. Correct inconsistency.
3	02/18/08	All	DCR-5863-1. Blue Sheet changes and corrected references, add system data change screening and definition for Cognizant System Engineer. Editorial changes per MP-DOCS-18.1.
4	05/23/08	Cover Page	DCR-7184. Minor change to advance the periodic review date only.
5	08/13/08	Various	DCR-7328. Management review to satisfy MAR# 37805.
6	11/05/12	Various	DCR-11799. Incorporated ITG-BLUESHEET-244 and updated document owner.
7	05/22/13	Various	DCR-12228. Incorporated CAR 75963.
8	12/05/13	Various	DCR-12849. Added a note to provide more information on raising SDCRs and deleted Steps 4.1.2.3 and 4.1.2.3.1 to modify the USQ evaluation in the work flow. Edited for consistency.
9	03/06/14	Various	DCR-13079. Added additional information to NOTE 1 prior to Step 4.1.4.2.

Temporary Software Override

(General Use)

Advanced Mixed Waste Treatment Project

Approved:

(*Signature on file. See DCR-11801.*)	11/01/12
Jared Hawley Software Engineering Manager	Date

AMWTP INSTRUCTION		
INST-CD&M-11.2.6, Rev. 5	Issued: 11/05/12	Effective: 11/06/12
Temporary Software Override		

TABLE OF CONTENTS

1.0 PURPOSE/SCOPE 1
2.0 ROLES AND RESPONSIBILITIES 1
3.0 PRECAUTIONS AND LIMITATIONS/PREREQUISITES 2
3.1 Precautions and Limitations 2
3.2 Prerequisites 3
4.0 INSTRUCTIONS 3
4.1 Requesting a TSO 3
4.2 ICS Engineer Investigation 4
4.3 Shift Supervisor Evaluation 5
4.4 Criticality Safety Evaluation 6
4.5 USQ Evaluation 7
4.6 Approval 8
4.7 Installation 9
4.8 Removal 10
4.9 Abnormal and Infrequent 11
5.0 DEFINITIONS 12
6.0 REFERENCES 13
7.0 RECORDS 13
8.0 EXHIBITS 13
9.0 APPENDICES 13
Appendix A – PLC IP Addresses A1
Appendix B – Revision Log B1

AMWTP INSTRUCTION		
INST-CD&M-11.2.6, Rev. 5	Issued: 11/05/12	Effective: 11/06/12
Temporary Software Override		

1.0 PURPOSE/SCOPE

The purpose of this instruction is to identify when and how *temporary* (see def.) *software* (see def.) overrides (TSOs) are performed. A software override is intended to allow operations to continue when a hardware or software breakdown condition cannot be corrected within a shift, due to the lack of replacement software, or to allow preventive maintenance and/or post maintenance testing to be performed without affecting other components and systems.

This procedure is applicable to only *Class-III software* (see def.) (see INST-CD&M-11.2.2, Software Inventory Classification). This instruction does not include "Temporary Changes," which are controlled in accordance with MP-CD&M-11.2, Software Quality Assurance.

2.0 ROLES AND RESPONSIBILITIES

Performer	Responsibilities
TSO Requester	• Initiates a TSO in TestTrack Pro.
Integrated Control System (ICS) Engineer	• Installs and removes TSO in accordance with TSO documentation • Evaluates and/or determines software modifications required to implement TSOs • Prepares documentation necessary to reproduce or accurately remove TSOs • Pursues a permanent resolution to software-related problems using the SCR process.
Operations Shift Supervisor (Ops SS)	• Evaluates potential hazards and special controls associated with TSO request • Ensures special controls and additional requirements are implemented • Directs installation and removal of TSO to ICS engineer • Performs daily review of active TSOs.
System Engineer (SE)	• Performs independent review of proposed software modifications and identifies risks and benefits associated with implementing the proposed modifications • Assists in the resolution of the problem(s) requiring a TSO.
Criticality Safety Staff	• Evaluates TSO request for criticality safety impacts.

Performer	Responsibilities
Qualified Unreviewed Safety Question (USQ) Evaluator	• Evaluates TSO request for Safety Basis impacts.
TSO Approver	• Evaluates TSO request • Approves TSO installation.
Plant Shift Manager	• Performs daily review of active TSOs • Authorizes continued operations of affected system(s) following the installation or removal of a TSO.
Nuclear Facility Manager (NFM)	• Approves extending a TSO beyond the 1 month expiration date • Ensures active pursuit of a resolution to the problem(s) requiring a TSO to be extended beyond one month • Ensures that TSOs extended beyond 1 month are properly tracked and removed as soon as possible • Fulfills the role of TSO approver or designates alternate TSO approvers.
Software Administrator	• Performs periodic review of TSO database to verify that TSOs are being properly documented and tracked • Performs weekly review of active TSOs to ensure that TSOs nearing expiration are removed or extended as appropriate • Performs notifications to affected users based on the results of TSO database reviews.

3.0 PRECAUTIONS AND LIMITATIONS/PREREQUISITES

3.1 Precautions and Limitations

3.1.1 TSOs are only allowed on Class III systems.

3.1.2 A TSO cannot be installed for more than one month without the approval of the NFM.

3.2 Prerequisites

3.2.1 Any TSO involving a *"Major Logic Change"* (see def.) has been tested on the *ICS simulator* (see def.) prior to loading the changes to the production network.

3.2.2 The special controls required to operate with the TSO affords equivalent safety/control as the original design.

4.0 INSTRUCTIONS

NOTE: *While the performance of the steps within this document involves the specified performer(s), the specified performer(s) may direct the completion of assigned steps via telecommunication when necessary. If any reviews or approvals are obtained via telecommunication, then the review/approval details, including the name of the reviewer/approver and date of the review/approval, is documented within the applicable TSO.*

4.1 Requesting a TSO

NOTE: *A TSO can be initiated by ANY authorized user of the TestTrack Pro TSO database.*

4.1.1 TSO Requester: From the TSO database in TestTrack Pro, select the "Add" button to start a new TSO.

4.1.2 TSO Requester: From the "Add TSO" screen, perform the following:

4.1.2.1 Give the new TSO a title by completing the "Title" field.

4.1.2.2 Select the applicable system number from the "System" drop down menu.

NOTE: *The TSO should be set to expire within 1 month's time.*

4.1.2.3 Select an expiration date for the TSO in the "Expiration Date" field.

4.1.2.4 Enter a problem description that states the reason(s) the TSO is needed in the "TSO Description" field.

4.1.2.5 Add any other known information to the TSO (affected documents, potential hazards, special controls, etc.).

4.1.2.6 **IF** the TSO is being requested by an ICS engineer,
THEN GO TO Section 4.2.

NOTE: *Selecting the "Save" button will automatically assign the new TSO to the ICS group for investigation.*

4.1.2.7 Review the TSO to ensure all required fields were correctly completed and select the "Save" button.

4.1.2.8 Inform a member of the ICS group and the on-duty Ops SS that a new TSO has been requested.

4.2 ICS Engineer Investigation

4.2.1 ICS Engineer: Evaluate the TSO and determine what, if any, temporary software changes are needed.

4.2.1.1 **IF** it is determined that a temporary software change is **NOT** an appropriate resolution to the specified problem,
THEN reject the TSO in accordance with Section 4.9.1.

4.2.2 ICS Engineer: Document the specific software changes that are needed in the "TSO Description" field.

4.2.2.1 **IF** the changes **CANNOT** be adequately represented by a description in the "TSO Description" field
THEN attach before and after screen shots to the TSO.

4.2.3 ICS Engineer: Select the appropriate software type from the "Software Type" drop down menu.

4.2.4 ICS Engineer: Indicate whether or not a System Change Request (SCR) is needed using the "SCR Required?" drop down menu:

4.2.4.1 **IF** it is determined that an SCR is needed,
THEN ensure an SCR is initiated
AND document the SCR number in the "SCR Number" field.

NOTE: *Temporary software overrides with a change type of "Toggle" will be toggled on and off to meet plant conditions. An example of a "Toggle" TSO would be a TSO used to simulate the status of a broken photo eye.*

4.2.5 ICS Engineer: Indicate the change type of the proposed software change using the "Change Type" drop down menu.

4.2.6 ICS Engineer: Indicate the severity of the proposed software change using the "Severity" drop down menu.

4.2.7 ICS Engineer: Determine any special conditions required for the installation and/or removal of the proposed software change **AND** document them in the "Special Controls/Additional Reqs" field.

4.2.8 ICS Engineer: Add any other known information to the TSO (affected documents, potential hazards, special controls, etc.).

4.2.9 ICS Engineer: Use the "ICS Investigate" button to document completion of the ICS engineer investigation and assign the TSO to the on-duty Ops SS for shift supervisor evaluation.

4.2.10 ICS Engineer: Review the TSO to ensure all required fields were correctly completed and select the "Save" button

4.2.11 ICS Engineer: Inform the Ops SS that the TSO is ready for shift supervisor evaluation.

4.3 Shift Supervisor Evaluation

4.3.1 Ops SS: Evaluate the TSO to ensure that there is a valid need for the proposed software change(s) and that the proposed software change(s) can be safely and compliantly implemented.

4.3.1.1 **IF** it is determined that there is **NOT** a valid need for the proposed temporary software change(s)
OR IF it is determined that the proposed software change(s) **CANNOT** be safely and compliantly implemented,
THEN reject the TSO in accordance with Section 4.9.1.

4.3.2 Ops SS: Contact a system engineer to obtain System Engineering concurrence with the proposed software change(s).

4.3.2.1 **IF** the system engineer does **NOT** concur with the proposed software change(s),
THEN reject the TSO in accordance with Section 4.9.1.

4.3.3 Ops SS: With the system engineer's guidance, perform the following:

4.3.3.1 Determine what, if any, hazards apply to the TSO
AND ensure they are documented in the "Potential Hazards w/TSO" field.

4.3.3.2 Establish any special controls or additional requirements for allowing operations to continue with the TSO in place
AND ensure they are documented in the "Special Controls/Additional Reqs" field.

4.3.3.3 Determine what, if any, documents will be affected by the TSO
AND ensure they are documented in the "Affected Documents" field.

4.3.4 Ops SS: Use the "SS Evaluate" button to document completion of the Shift Supervisor Evaluation
AND assign the TSO to Criticality Safety for criticality safety evaluation.

4.3.5 Ops SS: Review the TSO to ensure all required fields were correctly completed
AND select the "Save" button.

4.3.6 Ops SS: Inform Criticality Safety that the TSO is ready for criticality safety review.

4.4 Criticality Safety Evaluation

4.4.1 Criticality Safety: Complete review of TSO
AND inform the Ops SS of review results.

4.4.1.1 **IF** Criticality Safety does **NOT** concur with the TSO**,**
THEN reject the TSO in accordance with Section 4.9.1.

4.4.1.2 **IF** Criticality Safety concurs with the TSO,
THEN use the CS EVALUATE button to document completion of the criticality safety evaluation.

4.4.2 Criticality Safety: Review the TSO to ensure all required fields were correctly completed and select the "Save" button.

4.4.3 Ops SS: **IF** Criticality Safety has concurred with the TSO,
THEN ensure the TSO is assigned to a USQ evaluator for USQ evaluation.

4.5 USQ Evaluation

4.5.1 Qualified USQ Evaluator: Perform USQ evaluation in accordance with MP-NSPC-3.2, Unreviewed Safety Question Process.

4.5.1.1 TSO Requester: **IF** USQ evaluation reveals that an Unreviewed Safety Question exists (i.e., positive USQ determination),
THEN revise the change such that a USQ does not exist,
OR reject the TSO in accordance with Section 4.9.1.

4.5.2 Qualified USQ Evaluator: Document the USQ number in the "USQ Number" field.

4.5.3 Qualified USQ Evaluator: Use the "USQ Evaluate" button to document completion of the USQ Evaluation
AND assign the TSO to a TSO approver for final approval.

4.5.4 Qualified USQ Evaluator: **IF** the USQ evaluation was performed by the on-duty TSO approver,
THEN skip to Section 4.6.

4.5.5 Qualified USQ Evaluator: Review the TSO to ensure all required fields were correctly completed
AND select the "Save" button.

4.5.6 Qualified USQ Evaluator: Inform the TSO approver that the TSO is ready for approval.

4.6 Approval

NOTE: *The following steps are to be performed by either an NFM or, if applicable, a person designated by the NFM to fulfill the role of a TSO approver.*

4.6.1 TSO Approver: Evaluate the TSO to ensure that there is a valid need for the proposed software change(s) and that the proposed software change(s) can be safely and compliantly implemented.

4.6.2 TSO Approver: Ensure that the potential hazards are appropriately identified and that they will be adequately mitigated.

4.6.3 TSO Approver: Ensure that the special controls and additional requirements provide the necessary controls for installing the TSO, operating with the TSO in place, and removing the TSO.

4.6.4 TSO Approver: Ensure that the affected documents have been appropriately identified.

4.6.5 TSO Approver: Ensure that the USQ document applied to the TSO has been approved by a qualified USQ approver per the requirements of MP-NSPC-3.2.

4.6.6 TSO Approver: **IF** it is determined that the TSO request should **NOT** be approved,
THEN reject the TSO in accordance with Section 4.9.1.

4.6.7 TSO Approver: **IF** it is determined that the TSO request should be approved,
THEN use the “Approve TSO” button to document completion of the TSO Approval
AND assign the TSO to an ICS engineer for installation.

4.6.8 TSO Approver: Review the TSO to ensure all required fields were correctly completed
AND select the “Save” button.

4.6.9 TSO Approver: Inform the assigned ICS engineer and the on-duty Ops SS that the TSO request is approved.

4.7 Installation

4.7.1 Ops SS: Ensure that all potential hazards have been properly mitigated.

4.7.2 Ops SS: Ensure that all special controls and additional requirements are in place.

4.7.3 Ops SS: Ensure that any necessary document changes have been completed.

4.7.4 Ops SS: Ensure that the affected operators are notified.

4.7.5 Ops SS: Inform the assigned ICS engineer that all conditions have been met for the TSO to be installed.

4.7.6 ICS Engineer: **IF** a download is being performed to a programmable logic controller (PLC) via a TCP/IP connection,
THEN ensure that connection has been established to the correct internet protocol (IP) address or associated domain name. (Appendix A contains a list of PLC IP Addresses.)

4.7.7 ICS Engineer: Install the approved changes documented in the TSO.

NOTE: *While in use, TSOs with a change type of "Toggle" will be considered "Installed" regardless of the state the signal is in, and the toggling of the signal will be performed at the direction of the Operations Shift Supervisor.*

4.7.8 ICS Engineer: Verify that the change installation was successful.

4.7.9 ICS Engineer: Inform the Ops SS that the TSO is installed.

4.7.10 ICS Engineer: Within the TSO, document completion of the installation using the "Install" button.

4.7.11 ICS Engineer: Review the TSO to ensure all required fields were correctly completed
AND select the "Save" button.

4.7.12 Ops SS: Ensure that a functional test is performed to verify that the TSO works as intended.

4.7.13 Ops SS: Inform the plant shift manager that the TSO is installed and that the affected system(s) are ready for operation.

4.7.14 Plant Shift Manager: Verify that any conditions required for continued operation of the affected system(s) have been met.

4.7.15 Plant Shift Manager: Authorize continued operations of the affected system(s) with the TSO installed.

4.7.16 Plant Shift Manager: Ensure the NFM is informed that the TSO has been installed.

4.8 Removal

4.8.1 Plant Shift Manager: Authorize setting the conditions to remove the TSO.

4.8.2 Ops SS: Establish identified removal conditions, including any necessary document changes, if applicable.

4.8.3 Ops SS: Ensure that the affected operators are notified.

4.8.4 Ops SS: Inform the assigned ICS engineer that all conditions have been met for the TSO to be removed.

4.8.5 ICS Engineer: Review the TSO description and all attached screen shots to determine the exact changes implemented under the TSO.

4.8.6 ICS Engineer: **IF** the exact changes **CANNOT** be readily identified for removal,
THEN perform a full download of the baseline software in accordance with MP-CD&M-11.2.

4.8.6.1 **WHEN** loading baseline software,
THEN ensure all other TSOs currently in place for the affected system get reinstalled.

4.8.7 ICS Engineer: Remove all changes implemented under the TSO.

4.8.8 ICS Engineer: Verify that all applicable changes have been successfully removed.

4.8.9 ICS Engineer: Inform the Ops SS that the TSO has been removed.

4.8.10 ICS Engineer: Within the TSO, document completion of the removal using the “Remove” button.

4.8.11 ICS Engineer: Review the TSO to ensure all required fields were correctly completed
AND select the "Save" button.

4.8.12 Ops SS: Ensure that a functional test is performed to verify that the affected system(s) operate as expected.

4.8.13 Ops SS: Inform the plant shift manager that the TSO has been removed and that the affected system(s) are ready for operation.

4.8.14 Plant Shift Manager: Verify that any conditions required for continued operation of the affected system(s) have been met.

4.8.15 Plant Shift Manager: Authorize continued operations of the affected system(s) with the TSO removed.

4.8.16 Plant Shift Manager: Ensure the NFM is informed that the TSO has been removed.

4.9 Abnormal and Infrequent

4.9.1 Rejecting a TSO (prior to installation)

4.9.1.1 Select the TSO that is to be rejected.

4.9.1.2 In the left hand margin of the TSO screen, click on the word "Reject."

4.9.1.3 In the "Reject" screen, select the applicable reasoning for rejecting the TSO from the "Reasoning" drop-down menu.

4.9.1.4 Add any specific information regarding the rejection of the TSO in the "Notes" field.

4.9.1.5 Select the "Ok" button.

4.9.1.6 Ensure the changes to the TSO request have been saved.

4.9.1.7 Notify the TSO requester that the TSO has been rejected.

4.9.2 Extending the Duration of a TSO

4.9.2.1 Obtain NFM approval to extend the duration of the TSO for a specific amount of time, not to exceed 1 month.

4.9.2.2 On the TSO screen for the applicable TSO, increase the expiration date by the number of days specified by the NFM.

4.9.2.3 In the left hand margin of the TSO screen, click on the words "Extend Duration."

4.9.2.4 From the "Extend Duration" screen, enter the NFM approval details in the "Approval Details" field.

4.9.2.5 Select the applicable number of days the TSO is being extended from the "Number of Days Extended" drop-down menu.

4.9.2.6 Select the "Ok" button.

4.9.2.7 Save the changes to the TSO request.

4.9.2.8 NFM: Ensure that a resolution to the problem(s) requiring the TSO to be extended is being pursued.

4.9.2.9 NFM: Ensure that the TSO is properly tracked and that it is removed as soon as possible.

5.0 DEFINITIONS

Class-III software. Process software equipment that has NOT been identified as Safety class, safety significant, or otherwise import to safety by the Documented Safety Analysis (DSA), by statutory requirements, by Waste Isolation Pilot Plant requirements, or by permit requirements, and that could NOT cause direct injury to personnel through conventional or radiological means in the event of a failure.

ICS simulator. A mock-up representation of the Integrated Control System software and hardware utilized for development, testing, and training purposes.

Major logic change. Any logic change that cannot be readily identified or easily reproduced due to the complexity of its implementation, or any logic change that goes beyond the simulation and/or override of existing I/O and introduces system functionality that is outside the intent of the current system design.

Minor logic change. A logic change that is readily identifiable, easily reproduced, and that does NOT alter a system's functionality in a manner that deters from the intent of the current system design. The manual simulation and/or override of existing I/O (such as manually toggling the state of a broken photo-eye) is NOT considered to be altering the intent of the current design.

Software. Computer programs, operating systems, and user documentation pertaining to the operation of a computer system.

Temporary. A limited amount of time that is normally not more than 1 month.

6.0 REFERENCES

(1) RPT-DSA-02, Documented Safety Analysis

(2) INST-CD&M-11.2.1, Software Version Control

(3) INST-CD&M-11.2.2, Software Inventory Classification

(4) MP-CD&M-11.2, Software Quality Assurance

(5) MP-NSPC-3.2, Unreviewed Safety Question Process

(6) MP-DOC-18-2, Records Management

7.0 RECORDS

Records generated by this procedure are classified in accordance with the table below and dispositioned in accordance with MP-DOCS-18.2, Records Management.

Record Description	Classification
INST-CD&M-11.2.6, Case File	Facility Operating Record/ENV2-a-1/Destroy 5 years after life of facility

8.0 EXHIBITS

Exhibit 1 – Flow Chart

9.0 APPENDICES

Appendix A – PLC IP Addresses
Appendix B – Revision Log

Exhibit 1 – Flow Chart

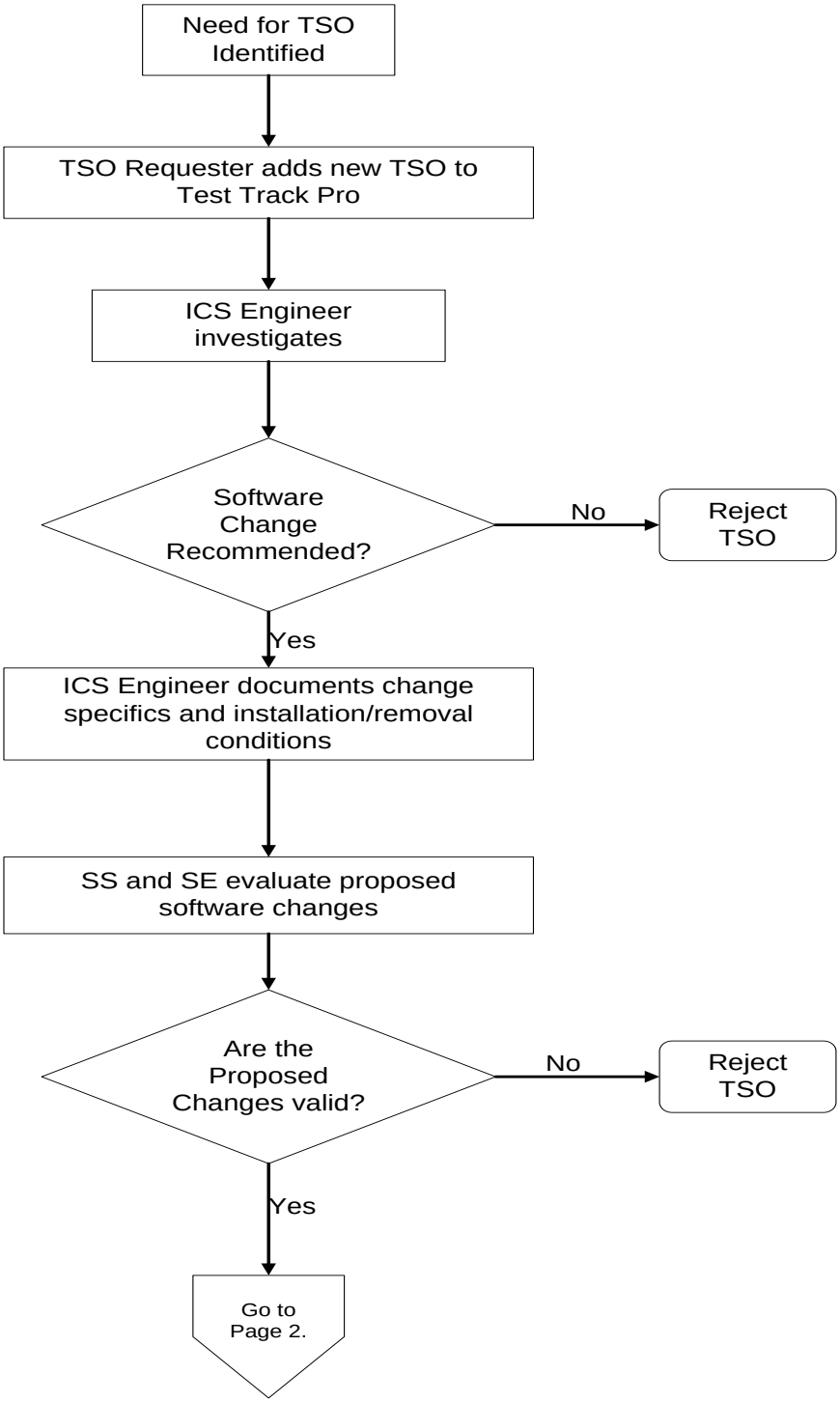

Exhibit 1 (cont.)

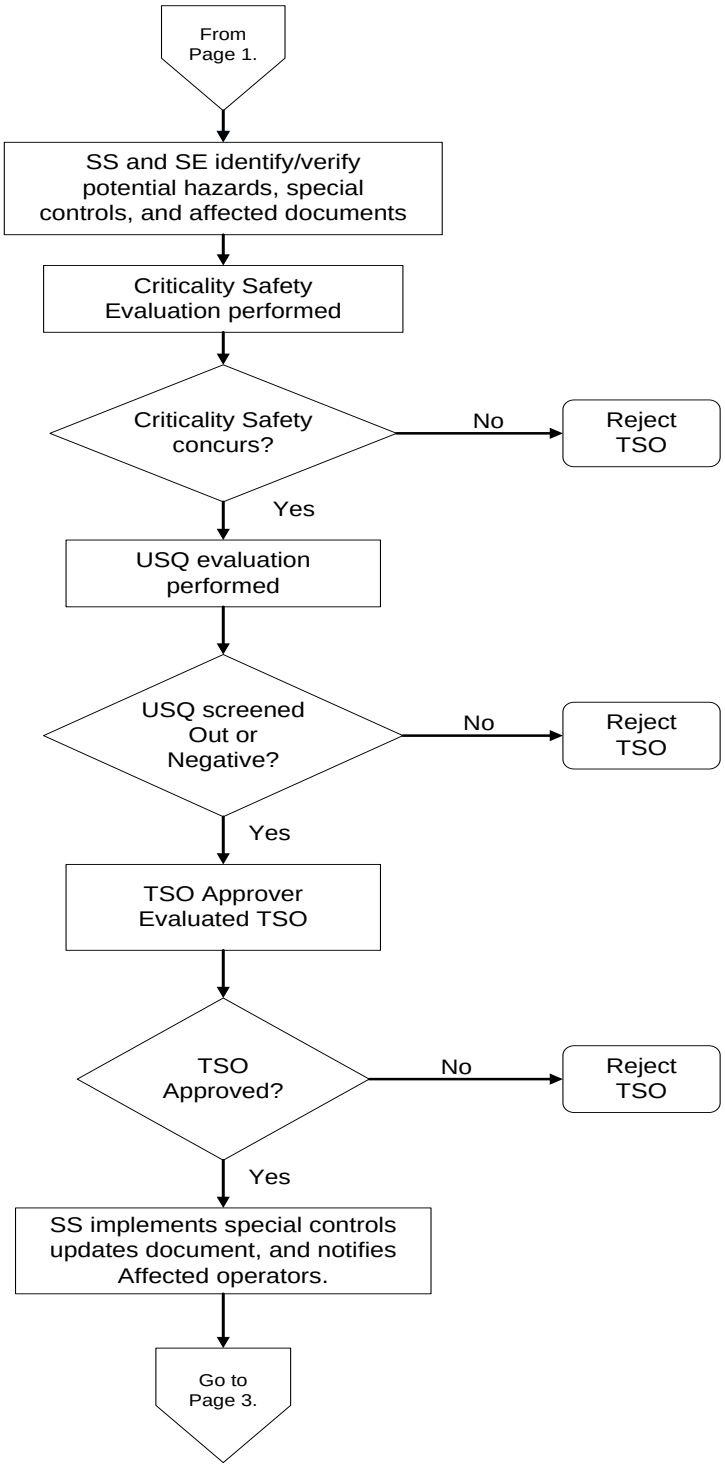
From Page 1.
SS and SE identify/verify potential hazards, special controls, and affected documents
Criticality Safety Evaluation performed
Criticality Safety concurs?
No
Reject TSO
Yes
USQ evaluation performed
USQ screened Out or Negative?
No
Reject TSO
Yes
TSO Approver Evaluated TSO
TSO Approved?
No
Reject TSO
Yes
SS implements special controls updates document, and notifies Affected operators.
Go to Page 3.

Exhibit 1 (cont.)

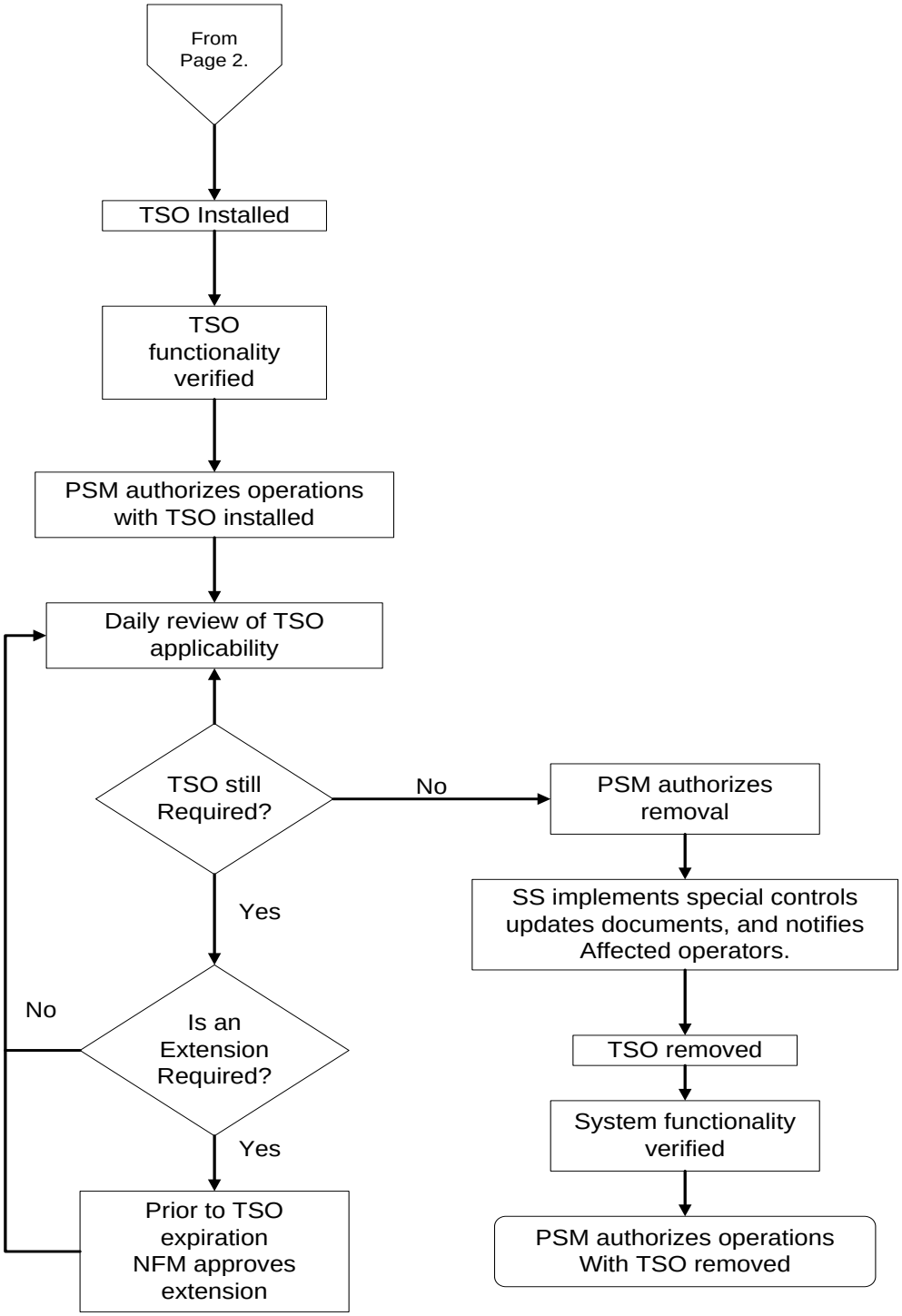

Appendix A – PLC IP Addresses

PLC IP Addresses		
System(s)	**DSN**	**Address**
214	PLC_214	10.1.4.90
220	DVS	10.1.4.69
225	PLC_225	10.1.4.96
310	PLC_310	10.1.4.74
320	PLC_320	10.1.4.70
330	PLC_330	10.1.4.71
335	PLC_335	10.1.4.75
340	PLC_340	10.1.4.72
345	PLC_345	10.1.4.76
350/352 = 350	PLC_350	10.1.4.73
370	PLC_370	10.1.4.78
390	PLC_390	10.1.4.77
410	PLC_410	10.1.4.79
412	PLC_412	10.1.4.80
420	PLC_420	10.1.4.81
422	PLC_422	10.1.4.82
423	PLC_423	10.1.4.83
440	PLC_440	10.1.4.84
600	PLC_600	10.1.4.91
710/720 = 700A	PLC_700A	10.1.4.92
730/740 = 700B	PLC_700B	10.1.4.93
750/760 = 700C	PLC_700C	10.1.4.94

Appendix B – Revision Log

Revision Number	Date Approved	Pages Affected	Description of Revision
0	01/24/06	All	DCR 4671. Procedure number INST-CMNT-10.1.9 changed to INST-CD&M-11.2.6. Title was changed. Complete rewrite to broaden the scope of this procedure to include all Class III software and incorporate the use of the TestTrack Pro database for electronically tracking temporary software overrides (TSOs). Reformatted to MP-DOCS-18.3. Editorial corrections made per DOE Conduct of Operation and DOE Writer's Guide.
1	05/02/07	Various	DCR-5704. Periodic review. Changes as a result of audit findings. Complete document rewrite. Edit per MP-DOCS-18.1.
2	06/02/10	Various	DCR-9307. Incorporated DOCS-BLUESHEET-01. Advanced periodic review date.
3	07/21/10	Pg 6, 9 and Exhibit 1	DCR-9436. Incorporated DOCS-BLUESHEET-01.
4	01/17/11	Various	DCR-9731. CAR 54791. Incorporated requirement for Criticality Safety review of all TSOs.
5	11/01/12	Various	Dcr-11801. Incorporated ITG-BLUESHEET-244 and updated document owner.

Calibration and Control of Measuring and Test Equipment

(General Use)

Advanced Mixed Waste Treatment Project

Approval:

(Signature on file. See DCR-13724.)

08/28/14
Date

AMWTP OPERATING INSTRUCTIONS		
INST-CMNT-10.5.1, Rev. 13	Issued: 08/28/14	Effective: 08/29/14

Calibration and Control of Measuring and Test Equipment

TABLE OF CONTENTS

1.0 PURPOSE/SCOPE 1
2.0 ROLES AND RESPONSIBILITIES 1
3.0 PRECAUTIONS AND LIMITATIONS/PREREQUISITES 3
3.1 Precautions and Limitations 3
3.2 Prerequisites 3
4.0 INSTRUCTIONS 3
4.1 Identification of Measuring and Test Equipment 3
4.2 Calibration Frequency 3
4.3 Control of Measuring and Test Equipment 4
4.4 Measuring and Test Equipment Evaluations 12
4.5 Measuring and Test Equipment Availability 18
4.6 Exemptions 18
4.7 Functional Checks 18
4.8 Retiring M&TE 18
5.0 DEFINITIONS 19
6.0 REFERENCES 20
7.0 RECORDS 21
8.0 EXHIBITS 21
9.0 APPENDICES 21
Appendix A – Revision Log A1

AMWTP OPERATING INSTRUCTIONS		
INST-CMNT-10.5.1, Rev. 13	Issued: 08/28/14	Effective: 08/29/14

Calibration and Control of Measuring and Test Equipment

1.0 PURPOSE/SCOPE

This instruction describes the system for identifying, and maintaining *calibration* (see def.) data and records for *measuring and test equipment* (M&TE; see def.) within the Advanced Mixed Waste Treatment Project (AMWTP). Traceability to known standards and test equipment will provide the means of demonstrating to customers and regulators that any equipment either calibrated or functionally tested will perform to the required accuracy.

Radiological instrumentation is calibrated per MP-RS&C-6.2, Radiological Instrumentation.

2.0 ROLES AND RESPONSIBILITIES

Performer	Responsibilities
Computerized Maintenance Management System (CMMS; see def.) Administrator	• Updates CMMS upon receipt of work order • Maintains Master Equipment List for M&TE • Maintains material history of M&TE.
Maintenance Manager	• Directs all aspects of the Measuring and Test Equipment program • Implements the requirements of this instruction • Designates whether M&TE is calibrated by an *approved calibration facility* (ACF; see def.) or the Maintenance Department • Approves Form-1613, M&TE Evaluation.
Maintenance Supervisor/Crew Lead	• In absence of M&TE Custodian (MTEC), controls access to M&TE not checked out for use.
Quality Assurance (QA) Manager or Designee	• Reviews M&TE evaluations • Concurs with impact of M&TE evaluations and decisions for generating or not generating nonconformance reports (NCRs).

Performer	Responsibilities
M&TE Custodian (MTEC) or Designee	• Initiates Form-1613 • Initiates Form-1132, New Plant Item Input Request • Identifies which M&TE will have a *restricted use sticker* (see def.) • Controls M&TE storage area and issues M&TE.
M&TE User	• Checks out M&TE from the MTEC or designee • Stores checked out M&TE in a manner to prevent damage • Verifies prior to use, the current calibration of M&TE • Verifies M&TE is in proper working condition prior to each use • Reports *lost M&TE* (see def.)/damaged /contaminated M&TE to the MTEC • Verifies M&TE is used within the specified limitations • Documents usage of M&TE.
Responsible Manager (see def.)	• Ensures M&TE users are properly trained on the use of calibrated M&TE • Assesses the implications of measurements made with faulty/out-of-tolerance M&TE.
System Engineer	• Assists the responsible manager, as necessary, when assessing the implications of measurements made with faulty/out-of-tolerance M&TE • Assigns calibration frequency to M&TE based on manufacturer's recommendations, M&TE usage, and M&TE historical reliability.

3.0 PRECAUTIONS AND LIMITATIONS/PREREQUISITES

3.1 Precautions and Limitations

None

3.2 Prerequisites

None

4.0 INSTRUCTIONS

4.1 Identification of Measuring and Test Equipment

4.1.1 MTEC: Complete the Originator Section of Form-1132, per MP-CMNT-10.19, Computerized Maintenance Management System, ensuring the asset number assigned to the new plant item has **NOT** been previously used.

4.1.2 MTEC: Obtain system engineer and Maintenance manager approvals on Form-1132.

4.1.3 MTEC: Submit Form-1132 to the CMMS Administrator.

4.1.4 CMMS Administrator: Update the CMMS, as necessary, upon receipt of Form-1132.

4.2 Calibration Frequency

4.2.1 System Engineer: Assign a calibration frequency based on manufacturer's recommendations, M&TE usage, and M&TE historical reliability.

4.2.2 Complete Form-1131, Maintenance Change Request (MCR), in accordance with MP-CMNT-10.19.

4.2.3 Submit Form-1131, to the CMMS Administrator.

4.2.4 CMMS Administrator**:** Update the CMMS, as necessary, upon receipt of Form-1131.

4.3 Control of Measuring and Test Equipment

NOTE: *Unless indicated otherwise, the MTEC performs all the steps in Section 4.3.1.*

4.3.1 Calibration/Recalibration

NOTE: *For M&TE being recalibrated, CMMS will automatically generate a work order in advance of the due date.*

4.3.1.1 **IF** the M&TE has a current manufacturer or vendor calibration certificate/report,
GO TO Step 4.3.1.8 to verify the calibration certificate/report information
WITHOUT RETURNING TO this step.

4.3.1.2 **IF** the M&TE will be shipped offsite,
THEN generate a shipper.

4.3.1.2.1 Obtain permission to access Simco's Database.

4.3.1.2.2 Set up Password for CERDAAC Log in.

4.3.1.2.3 Go to scheduling (schedule instrument for pickup).

4.3.1.2.4 Enter search text and click below type M&TE number (click asset).

4.3.1.2.5 Check box select for shipper.

4.3.1.2.6 View this shipper.

4.3.1.3 Complete an equipment inspection of M&TE
AND note any repair or remove on the shipper, as appropriate.

4.3.1.3.1 Send to SIMCO.

4.3.1.3.2 Pickup date selection (click continue).

4.3.1.3.3 Send shipper number.

4.3.1.3.4 View and print shipper.

4.3.1.3.5 **IF** the ACF does **NOT** have a shipper,
THEN use Form-1047, M&TE Shipper.

4.3.1.4 **IF** Form-1047 is used as the shipper,
THEN make a copy of the completed shipper
AND retain until work order completion.

4.3.1.5 **IF** the M&TE will be shipped offsite,
THEN perform **ONE** of the following:

4.3.1.5.1 Deliver the completed shipper and M&TE to the warehouse for shipment to the ACF.

OR

4.3.1.5.2 Arrange for delivery of the completed shipper and M&TE to the ACF.

4.3.1.6 **IF** the M&TE will stay on site,
THEN deliver the M&TE to the AMWTP Maintenance Department.

4.3.1.7 For existing M&TE, document on Form-1848, M&TE Checkout Log, the date the M&TE was sent to calibration.

4.3.1.8 Upon receipt of the M&TE and calibration certificate/report from the ACF, vendor/manufacturer, or AMWTP Maintenance Department, verify the calibration certificate/report contains the following information:

- Equipment ID number
- Item description
- Calibration date
- Identification of the calibration source(s)
- Calibration results
- Actions taken.

4.3.1.8.1 **IF** "as-found" checks are out-of-tolerance,
THEN GO TO Section 4.4.

4.3.1.9 **IF** a calibration label is present,
THEN ensure that the calibration label is legible, is properly attached to the equipment, and contains the following information:

- Equipment ID number
- Name, initial or badge number of the individual attaching the sticker
- Calibration date
- Calibration due date.

4.3.1.10 **IF** the label is missing
OR has inadequate information,
THEN perform the following:

4.3.1.10.1 Ensure that tamper resistant seals are in place as required.

4.3.1.10.2 Create a calibration label containing all the information above and attach it to the M&TE.

4.3.1.11 Review calibration report/manufacturer data to determine if any restrictions are present with the use of the M&TE.

4.3.1.11.1 **IF** the M&TE does **NOT** have a restricted use sticker,
THEN apply one, as necessary, containing the following information:

- Device identification number
- A statement of the restrictions that apply
- Name, initial, or badge number of the individual attaching the sticker
- Date the sticker is attached
- Expiration date, if applicable.

4.3.1.12 Submit the completed work order, calibration certificate/report, and Form-1848 to the CMMS administrator.

4.3.1.13 CMMS Administrator: Update CMMS upon receipt of the completed work order.

4.3.1.13.1 Scan the work order, calibration certificate/report, and Form-1848 **AND** attach it to the work order in CMMS.

4.3.1.13.2 Attach the calibration certificate/report to the M&TE asset in CMMS.

4.3.1.14 Generate a new Form-1848 for the M&TE Checkout Binder using the calibration certificate/report to obtain calibration dates.

4.3.2 Equipment Protection

4.3.2.1 MTEC: Protect equipment from damage when in storage and when transporting for use or calibration by boxing or by use of special mounting rigs (e.g., test gauges mounted in portable frames) as necessary.

4.3.2.2 MTEC/M&TE User: Store/transport M&TE such that temperature, humidity, lighting, vibration, dust control, cleanliness, electromagnetic interference, and any other factors will **NOT** affect the results of measurements.

4.3.2.3 M&TE User: Store, handle, and use all M&TE so that calibration is **NOT** adversely affected.

4.3.3 Issuing Measuring and Testing Equipment

NOTE: *The M&TE may only be utilized for the task for which it was issued (e.g., TRUPACT loading, supercompactor glovebox bolts).*

4.3.3.1 Check in and check out M&TE using Form-1848.

4.3.3.1.1 Each piece of M&TE will have a Form-1848 for each calibration cycle.

4.3.3.2 MTEC: **WHEN** M&TE is checked in and out,
THEN visually inspect tool/equipment to evaluate the condition for use or for repair if warranted.

4.3.3.2.1 **IF** M&TE requires repair
OR IF the condition is in question,
THEN segregate from other M&TE that is available for use.

4.3.3.3 M&TE User: Request M&TE to be checked out from the MTEC.

4.3.3.4 M&TE User: **IF** the M&TE will be used in a contaminated area,
THEN notify the MTEC.

4.3.3.5 M&TE User: Complete the following blocks of Form-1848:

- Reason/Comments (i.e., TRUPACT loading, super compactor glovebox bolts, etc.)
- WO number (if applicable) or area/OI number (i.e., WMF-618/OI-20)
- Name (signature/S number).

4.3.3.6 MTEC: Once the information has been recorded, review the information to ensure accuracy.

4.3.3.7 MTEC: **IF** a restricted use sticker is needed and **NOT** attached,
THEN attach a restricted use sticker.

4.3.3.8 MTEC: Date and initial Form-1848 to issue M&TE.

4.3.3.9 M&TE User: **IF** the M&TE is needed to be used for another task than that listed on the restricted use sticker,
OR IF the M&TE is to be used for something other than what it was checked out to perform,
THEN check the M&TE into the MTEC and have it re-issued for the new task.

NOTE: *Unless indicated otherwise, the M&TE user performs all the steps in Section 4.3.4.*

4.3.4 Measuring and Test Equipment Usage

4.3.4.1 Check for a restricted use sticker.

4.3.4.2 Use in accordance with information on restricted use sticker.

4.3.4.3 Check calibration label and verify M&TE is within its current calibration cycle.

4.3.4.3.1 **IF** the calibration label is illegible,
THEN return the M&TE to the MTEC for label replacement.

4.3.4.4 Ensure calibrated M&TE is sealed to deny access to adjustable devices.

4.3.4.5 **IF** an item of M&TE has exceeded its calibration interval; is suspected to be malfunctioning; has been modified, repaired, damaged, or has had components replaced; or its calibration seal has been compromised,
THEN perform the following:

4.3.4.5.1 Return M&TE to the MTEC.

4.3.4.5.2 MTEC: Distinctively mark and physically segregate from ready for issue M&TE
AND perform ONE of the following steps:

4.3.4.5.2.1 Send for calibration/repair per Section 4.8.

OR

4.3.4.5.2.2 **IF** M&TE is damaged beyond economical repair,
THEN perform evaluation per Section 4.4
AND retire M&TE per Step 4.3.1.

4.3.4.6 Enter the M&TE ID number and the calibration due date on the instruction, log, and/or work order being used.

4.3.4.7 **IF** the M&TE usage is **NOT** required to be recorded by an operating instruction, log, or a work order,
THEN document M&TE usage on Form-1625, M&TE Usage Report.

4.3.4.7.1 Once the task has been completed, forward Form(s)-1625 to the CMMS administrator.

4.3.4.7.2 CMMS Administrator: Attach an electronic copy of the Form(s)-1625 to M&TE asset in CMMS.

4.3.5 Measuring and Test Equipment Use in Contaminated Areas

4.3.5.1 MTEC: **IF** M&TE is going to be used in a contaminated area,
THEN obtain maintenance manager's approval prior to issuing M&TE.

4.3.5.2 M&TE User: Package equipment that is subject to radioactive contamination in a manner that minimizes the possibility of external or internal contamination (e.g., wrapping in clear plastic, taping, isolating).

4.3.5.3 M&TE User: **IF** M&TE is placed in contaminated storage, **THEN** notify the maintenance manager and MTEC.

4.3.6 Measuring and Test Equipment Storage

NOTE: *Returning click torque wrenches to minimum scale value helps to preserve the springs and ensures a longer product life cycle with high precision.*

4.3.6.1 MTEC: **WHEN** M&TE is not checked out for use, **THEN** keep it locked and control access to it.

4.3.6.1.1 Maintenance Supervisor or Maintenance Crew Lead: **IF** MTEC is not available, **THEN** control access to M&TE **NOT** checked out for use.

4.3.6.2 MTEC: Physically segregate and distinctively mark M&TE that is defective, out of calibration, or that requires investigation from ready for use M&TE, ensuring that only calibrated M&TE is available for issuance.

4.3.6.2.1 Place a Rejected Sticker on any equipment that fails to meet acceptance criteria or is suspected of being defective.

4.3.6.2.2 Ensure Rejected Sticker includes:

- Device identification number
- Reason for rejection
- Name, initial, or badge number of the individual attaching the sticker.

4.3.6.3 M&TE User: **WHEN** M&TE is checked out for long-term use,
THEN store M&TE in a manner that will prevent damage.

4.3.6.3.1 **WHEN** M&TE is **NOT** in use for periods longer than one shift,
THEN ensure that the M&TE is in a toolbox/locker/drawer.

4.3.6.3.2 Segregate M&TE in the toolbox/locker/drawer from non-M&TE tools/equipment.

4.3.6.3.3 Ensure the toolbox/locker/drawer is distinctively marked "For M&TE Only."

4.3.6.3.4 Store M&TE staged for use during a shift, but **NOT** actually in use, in its case (if available) at the station where the M&TE is to be used or in a toolbox/locker/drawer.

4.4 Measuring and Test Equipment Evaluations

4.4.1 MTEC: **IF** the M&TE as-found data is out of tolerance,
THEN identify all data recorded since the previous calibration by affected equipment through usage records and initiate a prompt evaluation.

4.4.1.1 Evaluate lost M&TE, M&TE that has become contaminated and cannot be free released, and damaged M&TE to determine if there was any indication to suspect that the integrity or calibration of the M&TE was compromised before the loss/contamination/damage.

4.4.1.2 **IF** the as-left data is in tolerance
AND the M&TE is **NOT** being retired,
THEN return the M&TE to service.

4.4.1.2.1 **IF** a calibration label is present,
THEN ensure that the calibration label is legible, properly attached to the equipment, and contains the following information:

- Equipment ID number
- Name, initials, or badge number of the individual attaching the sticker
- Calibration date
- Calibration due date.

4.4.1.2.2 **IF** the label is missing
OR has inadequate information,
THEN perform the following:

4.4.1.2.2.1 Ensure the tamper resistant seals are in place as required.

4.4.1.2.2.2 Create a calibration label containing all the information above and attach it to the M&TE.

4.4.1.2.3 Review calibration report/manufacturer data to determine if any restrictions are present with the use of the M&TE.

4.4.1.2.3.1 **IF** the M&TE does **NOT** have a restricted use sticker, **THEN** apply one, as necessary, containing the following information:

- Device identification number
- A statement of the restrictions that apply
- Name, initial, or badge number of the individual attaching the sticker
- Date the sticker is attached
- Expiration date, if applicable.

4.4.1.2.4 Generate a new Form-1848 for the M&TE Checkout Binder using the calibration certificate/report to obtain calibration dates.

4.4.2 MTEC**:** Initiate Form-1613 to evaluate the M&TE condition (out of tolerance, damage, loss, contamination, etc.).

4.4.2.1 Obtain Evaluation Number from Engineering Document Control.

4.4.2.1.1 After hours, obtain the Evaluation Number from the following file: Enterprise\Design Engineering\After Hour Engineering Document Number.xls.

NOTE: *The "Original Cal Date" and "Cal Due Date" are used to establish the period of time under evaluation.*

4.4.2.2 Complete information in the following blocks:

- Evaluation Number
- Instrument Number
- Instrument Type
- Serial Number
- Original Cal Date
- Cal Due Date
- Condition (out of tolerance, damage, loss, contamination, etc.).

4.4.3 MTEC: Initiate a TrackWise action item for the tracking of Form-1613.

4.4.3.1 Identify the evaluation number on the action item.

4.4.3.2 Document action item number on Form-1613.

4.4.3.3 Give the action item a completion date of 30 days from initiation of the action item.

4.4.3.4 Assign action item to manager responsible for the equipment/process on which M&TE has been used.

4.4.4 MTEC: Forward evaluation package (Form-1613, Form-1848, calibration certificate/report, and CMMS usage report) to the responsible manager or system engineer for completion.

4.4.5 Responsible Manager or System Engineer: Perform the following steps:

4.4.5.1 Determine the equipment affected by the M&TE, using Form(s)-1625, Form-1848, CMMS usage report, operating instructions, operations logs, etc.

4.4.5.2 Consider the condition (out of tolerance, damage, contamination, etc.) reported, and evaluate the measurements/tests taken with the M&TE since its last calibration and document on Form-1613.

4.4.5.3 If necessary, contact the system engineer to assist in determining the validity of measurements/tests taken with the M&TE since its last calibration.

4.4.5.4 Assess the implications of measurements made with the M&TE.

4.4.5.4.1 Document evaluation/corrective actions to be taken on Form-1613.

4.4.5.4.2 **IF** the M&TE was used to calibrate Quality Level 1, 2, or 3 plant instrumentation **AND** the out-of-tolerance condition affected the instrument calibration in a manner that rendered the instrument having been used out of specification,
THEN generate an NCR, per MP-Q&SI-5.4, Identification of Nonconforming Conditions.

4.4.5.4.2.1 **IF** it is determined necessary, **THEN** generate a TrackWise NCR.

4.4.5.4.2.2 Document NCR number on Form-1613.

4.4.5.5 Sign “Submitted” block of Form-1613.

4.4.5.6 Forward the evaluation package to the MTEC.

4.4.6 MTEC: Forward the evaluation package to maintenance manager for approval.

4.4.7 Maintenance Manager: Review evaluation and recommended corrective actions documented on Form-1613.

4.4.7.1 **IF** evaluation and corrective actions are correct,
THEN sign Form-1613 indicating approval of evaluation and recommended corrective actions.

4.4.8 Maintenance Manager: Forward the evaluation package to the MTEC.

4.4.9 MTEC: Forward the evaluation package to the Quality Assurance manager for concurrence.

4.4.10 QA Manager or Designee: Review evaluation and recommended corrective actions documented on Form-1613.

4.4.10.1 **IF** evaluation and recommended corrective actions are correct,
THEN sign Form-1613 indicating concurrence with the evaluation and recommended corrective actions.

4.4.11 QA Manager or Designee: Forward the evaluation package to the MTEC.

4.4.12 MTEC: Return the evaluation package to the responsible manager.

4.4.13 Responsible Manager: Document evaluation results from Form-1613 on action item.

4.4.14 Responsible Manager: Forward the evaluation package to the MTEC.

4.4.15 MTEC: **IF** the M&TE needs to be retired,
THEN retire the M&TE (see Section 4.8).

4.4.16 MTEC: Forward a copy of the evaluation package to the CMMS administrator.

4.4.17 MTEC: Deliver the completed evaluation package to Engineering Document Control.

4.4.18 MTEC: **IF** there is an open work order,
THEN submit the completed work order, calibration certificate/report, and Form-1848 to the CMMS Administrator.

4.4.19 CMMS Administrator: Attach an electronic copy of the evaluation package to M&TE asset in CMMS.

4.4.20 CMMS Administrator: **IF** a work order is received,
THEN update CMMS.

4.4.20.1 Scan the work order, calibration certificate/report, and Form-1848
AND attach it to the work order in CMMS.

4.4.20.2 Attach the calibration certificate/report to the M&TE asset in CMMS.

4.5 Measuring and Test Equipment Availability

4.5.1 MTEC: Ensure sufficient M&TE of each type is always available.

4.5.1.1 Stagger the calibration expiration dates, as necessary, by submitting Form-1131 to ensure sufficient M&TE of a particular type is available for use at any time.

4.6 Exemptions

4.6.1 System Engineer: Approve and document all exemptions or deviations from periodic calibration via the Maintenance Change Request process per MP-CMNT-10.19.

4.7 Functional Checks

NOTE: *The following type of checks can be used, when applicable, to detect M&TE problems before and after an instrument is used in the field. These checks are not substitutes for* calibration checks *(see def.). Example: A work procedure may require that torque wrenches be tested before and after use utilizing a calibrated torque wrench tester.*

4.7.1 MTEC: **IF** operational tests, functional checks, or battery checks of M&TE are performed,
THEN clearly specify in the work order, operating instruction, or users manual the desired response or acceptance criteria.

NOTE: *Unless indicated otherwise, the MTEC performs all the steps in Section 4.8.*

4.8 Retiring M&TE

4.8.1 **IF** M&TE has been used since last calibration,
THEN send M&TE for calibration per Step 4.3.1.

4.8.1.1 **IF** M&TE is found to be out of tolerance,
THEN perform M&TE evaluation per Step 4.4.

4.8.2 Make note in Form-1848 that M&TE is going to be retired.

4.8.3 Generate a Form-1131 in accordance with MP-CMNT-10.19 to retire the M&TE.

4.8.4 Forward a copy of Form-1848, Form-1131, and calibration certificate/report (if necessary) to the CMMS administrator.

4.8.5 CMMS Administrator: Attach an electronic copy of Form-1848 and Form-1131 to M&TE in CMMS.

NOTE: *Equipment taken out-of-service will not be deleted from CMMS.*

4.8.6 CMMS Administrator: Update CMMS to take M&TE out-of-service.

5.0 DEFINITIONS

Approved calibration facility. A manufacturer, vendor, or AMWTP-approved calibration lab that operates in accordance with the requirements of ANSI/NCSL-Z540-1 or other commensurate standard.

Calibration. The tests and adjustments to align an instrument in order to meet manufacturer's recommendations, statutory and/or regulatory requirements.

Calibration checks. The testing to verify the instrument is in calibration with a check standard that is periodically calibrated to NIST traceable standards. If the results are satisfactory then no adjustments are required and the calibration check meets the requirements of a periodic calibration and an updated calibration sticker will be affixed to the instrument.

Computerized Maintenance Management System. A commercial off-the-shelf client-server application, which provides a platform for users to prioritize tasks, assigns work based on the availability of necessary parts and labor, and analyzes equipment failures to implement appropriate preventive/predictive maintenance measures.

Lost M&TE. Any M&TE, which is missing, misplaced, or cannot be located between recalibrations after it has been used to perform M&TE functions at the AMWTP.

Measuring and test equipment. All devices or systems used to calibrate, certify, measure, gauge, troubleshoot, test, or inspect in order to control data or to acquire data to verify conformance to specified requirements. M&TE does not include in-plant and process instrumentation, radiation monitoring equipment, test equipment used for preliminary checks where data obtained is not used to determine acceptability or verify conformance to established criteria, or rulers, tape measures, levels, and other such devices, if normal commercial equipment provides adequate accuracy.

Responsible manager. Manager responsible for the equipment/process on which M&TE has been used.

Restricted use sticker. A sticker that identifies the specific tasks the M&TE has been designated to be used for (e.g., torque TRUPACT, calibration checks), limited use in specific areas/procedures, limitations and restrictions to operate the M&TE based on the calibration information (e.g., specific range, direction of movement [clockwise only], temperature band), internal radioactive contamination, and/or restricted use such as oil, oxygen, saltwater, or demineralized water systems.

6.0 REFERENCES

(1) MP-CMNT-10.19, Computerized Maintenance Management System

(2) MP-DOCS-18.2, Records Management

(3) MP-Q&SI-5.4, Identification of Nonconforming Conditions

(4) MP-RS&C-6.2, Radiological Instrumentation

7.0 RECORDS

Records generated by this procedure are classified in accordance with the table below and dispositioned in accordance with MP-DOCS-18.2, Records Management.

Record Description	Classification
INST-CMNT-10.5.1, Case File	Both FOR/NP WIPP/ENV2-a-1-a/Destroy 5 years after Life of Facility
Calibration Certifications/Reports	Both FOR/NP WIPP/ENV2-a-1-a/Destroy 5 years after Life of Facility
Form-1047, M&TE Shipper	Non-Record. (The form is a tool that can be discarded once the M&TE has been returned to AMWTP.)
Form-1131, Maintenance Change Request	Facility Operating Record/ENV2-a-1-a/Destroy 5 years after Life of Facility
Form-1132, New Plant Item Input Request	Facility Operating Record/ENV2-a-1-a/Destroy 5 years after Life of Facility
Form-1613, M&TE Evaluation	Facility Operating Record/ENV2-a-1-a/Destroy 5 years after Life of Facility
Form-1625, M&TE Usage Report	Facility Operating Record/ENV2-a-1-a/Destroy 5 years after Life of Facility
Form-1848, M&TE Checkout Log	Facility Operating Record/ENV2-a-1-a/Destroy 5 years after Life of Facility

8.0 EXHIBITS

None

9.0 APPENDICES

Appendix A – Revision Log

Appendix A – Revision Log

Revision Number	Date Approved	Pages Affected	Description of Revision
0	06/25/2002	All	Initial issue: DCR-2001-1070
1	9/09/2002		Re-issue: DCR-2002-1442
2	9/16/2002	4, 5, 6	Re-issue: DCR-2002-1474
2.1	1/15/03	All	Minor change, see DCR-2003-1914
3	4/24/2003	All	Incorporate changes identified during a self-assessment, see DCR-2003-2138.
4	1/12/05	All	Corrective actions incorporated to clarify actions and responsibilities for records management of Calibration Certificates/Reports. Reference CAR9438, CBFO Audit A-04-22, CBFO CAR 04-045. See DCR-2004-3279. Incorporate additional CBFO comments not previously identified, see DCR-2004-3279-1 and CBFO DRR 04-2289 comment #2 and additions for clarification, see DCR-2004-3279-2.
5	11/16/05	All	Address surveillance (QAS-05-07) comments, see DCR-2005-4128.
6	12/22/05	All	Minor change to correct typos, see DCR-4683.
7	2/14/06	All	Incorporate comments from the System Engineer and corrective action for CAR-12451, see DCR-4797.
8	3/30/06	All	DCR-4921. Made formatting corrections to resolve CAR-21421.
9	10/03/07	All	DCR-6286. Added detail on evaluating the validity of measurements/tests taken with faulty/out-of-tolerance/lost M&TE since its last calibration. (See CAR 27740) Entire document revised.

Revision Number	Date Approved	Pages Affected	Description of Revision
10	03/19/08	All	DCR-6698. Complete rewrite to incorporate all requirements of DOE 433.1-1 and align with management procedure. Incorporated internal comments.
11	09/20/10	Various	DCR-9341. Clarified the use of the "shipper" throughout the document.
12	12/11/12	All	DCR-11638. Applied ITG Bluesheet-244. Added Steps 4.3.1.2, 4.3.1.3, and deleted old step 4.3.1.3 to support new process.
13	08/28/14	Section 4.4	DCR-13724. Added substeps at Step 4.4.1.2 for clarification in returning M&TE to service. Added steps to instruct close of the work order when a work order exists. Editorial changes made to formatting of steps per requirements of MP-DOCS-18.1.

Testing In-Plant and Process Instrumentation

(General Use)

Advanced Mixed Waste Treatment Project

Approved:

(Signature on file. See DCR-11283.) 09/23/12

Rob Hamilton — Date

Maintenance Manager

AMWTP OPERATING INSTRUCTIONS		
INST-CMNT-10.14.1, Rev. 8	Issued: 09/24/12	Effective: 09/25/12

Testing In-Plant and Process Instrumentation

TABLE OF CONTENTS

1.0 PURPOSE/SCOPE 1
2.0 ROLES AND RESPONSIBLITIES 1
3.0 PRECAUTIONS AND LIMITATIONS/PREREQUISITES 2
3.1 Precautions and Limitations 2
3.2 Prerequisites 2
4.0 INSTRUCTIONS 2
4.1 General Instructions 2
4.2 Calibration Check Instructions 2
4.3 Functional Check Instructions 3
4.4 Faulty or Out of Tolerance IP&P Instruments 4
4.5 Changes 5
5.0 DEFINITIONS 6
6.0 REFERENCES 6
7.0 RECORDS 7
8.0 EXHIBITS 7
9.0 APPENDICES 7
Appendix A – IP&P Instrument Testing Decision Tree A1
Appendix B – Revision Log B1

AMWTP OPERATING INSTRUCTIONS		
INST-CMNT-10.14.1, Rev. 8	Issued: 09/24/12	Effective: 09/25/12

Testing In-Plant and Process Instrumentation

1.0 PURPOSE/SCOPE

This instruction describes the testing of *In-Plant and Process* (IP&P; see def.) instrumentation. The type of testing performed on each instrument varies depending on its use (see Appendix A).

This document provides step-by-step instructions. Although the steps must be performed as stated, signoff of step performance or having the instruction at hand as steps are performed is not required.

2.0 ROLES AND RESPONSIBILITIES

Performer	Responsibilities
Maintenance Manager (MM)	• Manages all aspects of the *Calibration* (see def.) program. • Assesses issues concerning IP&P instruments that are either "past due for calibration" or are determined to be "out of calibration." • Evaluates instruments that fail a calibration, *calibration/functional check* (see def) for continued operation.
Computerized Maintenance Management System (CMMS) Administrator	• Generates reports as required by the Engineering and Maintenance managers to ensure reliability problems are addressed
Quality Assurance (QA) Manager	• Concurs with instrument calibration extensions.
Maintenance Supervisor (MS)	• Implements this procedure. • Informs the MM and Plant Shift Manager (PSM) when an IP&P instrument fails testing or is out of calibration.
Technicians	• Understands how to perform calibrations, calibration checks, and functional tests. • Performs IP&P instrument testing • Informs the MS immediately if an instrument fails its calibration, calibration check, or functional check.

3.0 PRECAUTIONS AND LIMITATIONS/PREREQUISITES

3.1 Precautions and Limitations

None

3.2 Prerequisites

None

4.0 INSTRUCTIONS

4.1 General Instructions

4.1.1 Technician(s): Inform the Maintenance Supervisor if a *calibration* (see def.)/test label is discovered missing from an IP&P instrument.

4.1.2 MS: Work with the *Computerized Maintenance Management System* (CMMS; see def.) Administrator to replace the label with the required information (as indicated in Step 4.2.2.4).

NOTE: *This is due to the need to exercise the system through a range of indication that may be outside the norm.*

4.1.3 Technician: Refer to PTW during a *Functional Chec*k (see def.) of IP&P instrumentation when the IP&P instrument remains connected to the parent system.

4.2 Calibration Check Instructions

4.2.1 Maintenance Supervisor

4.2.1.1 Obtain the work order of IP&P instrument(s) to be calibration checked from the CMMS Administrator.

4.2.1.2 Designate a technician to perform the *calibration check* (see def.).

4.2.1.3 Inform the Maintenance Manager (MM) and Plant Shift Manager when an instrument fails testing.

4.2.2 Technician

4.2.2.1 Obtain the work order and IP&P instrument calibration check checklist from the MS.

4.2.2.2 Locate the IP&P instrument and remove it from service in accordance with the proper work control documents.

4.2.2.3 Calibration check the IP&P instrument in accordance with the Operations and Maintenance (O&M) manual, manufacturers specifications, maintenance instructions and/or calibration check instruction.

4.2.2.3.1 **IF** the IP&P instrument is shown to out of the specified tolerance,
THEN inform the MS, and complete the calibration check.

4.2.2.3.2 Perform a complete calibration of the IP&P instrument when directed by the MS.

4.2.2.3.3 **IF** the IP&P instrument won't calibrate,
THEN immediately inform the MS.

4.2.2.4 After a satisfactory calibration check or recalibration, affix a new calibration/test label to the IP&P instrument that contains the following information:

- Equipment ID number
- Calibration date
- Calibration due date.

4.3 Functional Check Instructions

4.3.1 Maintenance Supervisor

4.3.1.1 Obtain the work order of IP&P instruments to be functionally checked from the CMMS Administrator.

4.3.1.2 Designate a technician(s) to perform the functional check(s).

4.3.2 Technician

4.3.2.1 Obtain the work order of IP&P instrument functional check list from the MS.

4.3.2.2 Locate the IP&P instrument and determine the method that will be used to perform the functional check.

4.3.2.3 Obtain the proper work control document(s) for the affected IP&P instrument.

4.3.2.4 Perform the functional check through the normal range of system operation.

4.3.2.4.1 Record the accuracy (±) of the IP&P instrument.

4.3.2.5 After a satisfactory functional check, affix a new calibration/test label to the IP&P instrument that contains the following information:

- Equipment ID number
- Test date
- Due date.

4.4 Faulty or Out-of-Tolerance IP&P Instruments

4.4.1 Maintenance Supervisor

4.4.1.1 **IF** an IP&P instrument is found not operating properly **OR IF** proper operation is in question, **THEN** raise a work order for the instrument to be repaired and subsequently tested.

4.4.1.1.1 Direct a functional check in accordance with Steps 4.3.2.2 through 4.3.2.5 as minimum.

4.4.1.1.2 **IF** the functional check was satisfactory **AND** the IP&P instrument is normally tested via a routinely scheduled calibration, **THEN** perform a calibration at the next scheduled due date.

4.4.1.1.3 **IF** the functional check indicates abnormal operation by the IP&P instrument, **THEN** notify the MM and Plant Shift Manager prior to continuing system operation.

4.4.2 Maintenance Manager

4.4.2.1 Confer with QA manager and discuss the necessity of generating a Nonconformance report, per MP-Q&SI-5.4, Identification of Nonconforming Conditions, for Class I and II instruments.

4.4.2.2 Document the evaluation on Form-1575, Evaluation of a Failed Calibration/Functional Check for all instruments which are faulty or out of tolerance.

4.4.2.3 Evaluate the actions necessary to continue operations and record the evaluation on Form-1575.

4.4.2.3.1 Obtain an evaluation number for Form-1575 from Engineering Document Control.

4.4.2.3.2 Forward the completed form to Engineering Document Control for file.

4.4.2.3.3 Forward a copy of the completed form to the Plant Shift Manager.

4.4.3 CMMS Administrator

4.4.3.1 Generate reports as required by the Engineering and Maintenance (E&M) managers to ensure reliability problems are addressed, as necessary.

4.5 Changes

4.5.1 All changes or deviations from the scheduled periodic testing will be approved and documented via the Maintenance Change Request process per MP-CMNT-10.19, Computerized Maintenance Management System.

4.5.1.1 QA Manager: Concurrence is required for any extension of the calibration due date for Class I or Class II equipment.

4.5.1.2 Indicate concurrence by signing Form-1131, Maintenance Change Request, in appropriate space.

5.0 DEFINITIONS

Calibration. The testing and adjustments necessary to align an IP&P instrument in order for the indication to meet manufacturer's recommendations, statutory or regulatory requirement, Operations limits or specifications or meet requirements determined by Engineering Judgment.

Calibration Check. A test to verify the IP&P instrument indication is in calibration with the *measuring and test equipment (*M&TE; see def.), which has been calibrated to National Institute of Standards and Technology (NIST) traceable standards.

Functional Check. A test using either another IP&P instrument or a portable measuring device (not required to be part of the AMWTP M&TE program), as the standard by which the instrument in question is checked. The IP&P instrument may remain connected to the parent system during the functional check.

In-Plant and Process Instrumentation. Installed instrumentation and process equipment (gauges, differential pressure cells, meters, load cells etc.) used to provide a measurable indication, with a specific degree of accuracy.

Computerized Maintenance Management System. A commercial off-the-shelf client-server application, which provides a platform for users to prioritize tasks, assign work based on the availability of necessary parts and labor, and analyze equipment failures to implement appropriate preventive/predictive maintenance measures.

Measuring and Test Equipment. All devices or systems used to calibrate, certify, measure, gauge, troubleshoot, test, or inspect in order to control data or to acquire data to verify conformance to specified requirements. M&TE does not include in-plant and process instrumentation, radiation monitoring equipment, industrial hygiene monitoring equipment, test equipment used for preliminary checks where data obtained is not used to determine acceptability or verify conformance to established criteria, or rulers, tape measures, levels, and other such devices, if normal commercial equipment provides adequate accuracy.

6.0 REFERENCES

(1) PD-CMNT-01, Nuclear Maintenance Management Program Description

(2) MP-CMNT-10.14, In-Plant and Process Instrumentation Testing Program.

(3) MP-CMNT-10.19, Computerized Maintenance Management System

(4) MP-DOCS-18.2, Records Management

(5) MP-Q&SI-5.4, Identification of Nonconforming Conditions.

7.0 RECORDS

Records generated by this procedure are classified in accordance with the table below, and dispositioned in accordance with MP-DOCS-18.2, Records Management.

Record Description	Classification
INST-CMNT-10.14.1, Case File	Facility Operating Record/ENV2-a-1-a /Destroy 5 years after Life of Facility
Form-1131, Maintenance Change Request	Facility Operating Record/ENV2-a-1-a /Destroy 5 years after Life of Facility
Form-1575, Evaluation of a Failed Calibration/Functional Check	Facility Operating Record/ENV2-a-1-a /Destroy 5 years after Life of Facility

8.0 EXHIBITS

None

9.0 APPENDICES

Appendix A – IP&P Instrument Testing Decision Tree

Appendix A – IP&P Instrument Testing Decision Tree

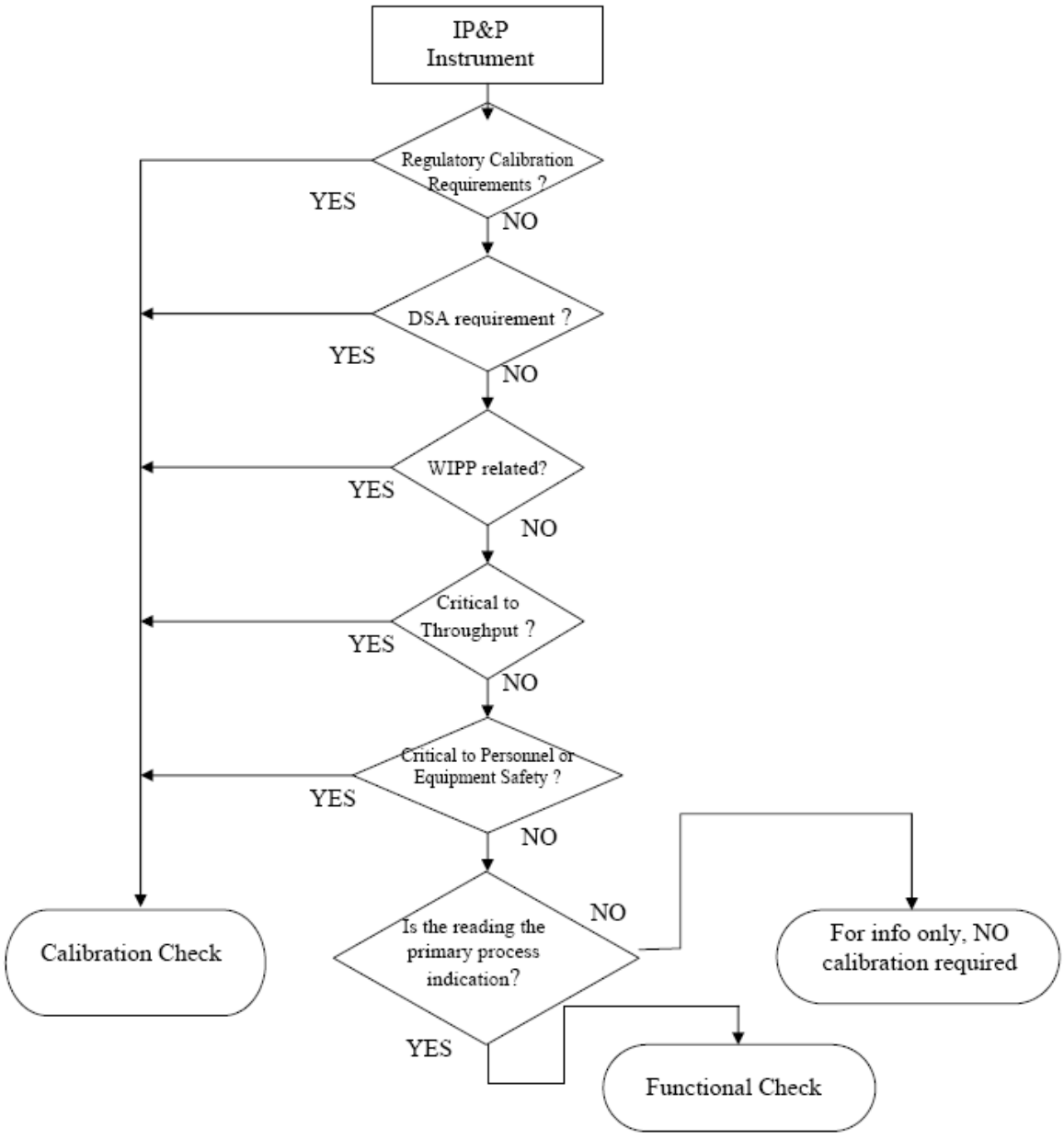

Appendix B – Revision Log

Revision Number	Date Approved	Pages Affected	Description of Revision
0	09/12/2002	All	Initial issue: DCR-2002-1445
1	4/24/2003	All	Incorporate changes identified during a self-assessment, see DCR-2003-2138.
2	6/9/03	All	Correct deficiencies identified during a self-assessment, see DCR-2003-2258
3	12/1/2003	8	Delete requirement for QA to Concur with all changes and deviations of Cal schedule. Add requirement for QA concurrence extending due dates beyond scheduled calibration dates. See DCR-2003-2459
4	5/13/04	All	Incorporate comments from a self-assessment, see DCR-2004-2957.
5	5/31/06	All	DCR-4299. Incorporate Blue Sheet changes and minor editorial changes.
6	06/19/07	Title Page	DCR-5933. Performed periodic review and results of periodic review minor editorial change were made.
7	04/28/10	Various	DCR-9288. Incorporate DOCS-BLUESHEET-01, and moved the revision log to last appendix per company template. Advanced periodic review date.
8	09/23/12	Various	DCR-11283. Incorporated ITG-BLUESHEET-244. Made changes throughout to incorporate changes from ISMS update and periodic review.

Facility Visual Examination Operations

(General Use)

Advanced Mixed Waste Treatment Project

Approval:

(*Signature on file. See DCR-12699.*) 09/03/13

Date

Verification of Effective Revision): (After verifying current revision, replace cover page on working copy if more space is needed.)

Initials	Date	Initials	Date	Initials	Date	Initials	Date

AMWTP FACILITY OPERATIONS INSTRUCTION		
INST-FOI-17, Rev. 27	Issued: 09/03/13	Effective: 09/04/13
Facility Visual Examination Operations		

TABLE OF CONTENTS

1.0 PURPOSE/SCOPE 1

2.0 ROLES AND RESPONSIBILITIES 1

3.0 PRECAUTIONS AND LIMITATIONS/PREREQUISITES 2

3.1 Precautions and Limitations 2

3.2 Prerequisites 4

4.0 INSTRUCTIONS 5

4.1 General Instructions 5

4.2 Visual Examination of Newly Generated Waste Packages 7

4.3 Visual Examination of Newly Generated Waste Closure 16

4.4 Visual Examination and Repackaging of Boxline Legacy Waste 19

4.5 RTR/VE Update (Supplemental Analysis to RTR or VE Batch) 28

4.6 Repackaging Drums and Boxes 32

4.7 Post-Job Review 40

4.8 Abnormal and Infrequent Operations 40

5.0 DEFINITIONS 42

6.0 REFERENCES 45

7.0 RECORDS 46

8.0 EXHIBITS 46

9.0 APPENDICES 47

Exhibit 1 – Waste Material Parameter Descriptions 48

Exhibit 2 – Parameters and Weights of Commonly Identified Items (EXAMPLE**) 49

Exhibit 3 – Fill Factor 50

Exhibit 4 – List of TRU Prohibited Items 51

Exhibit 5 – Volume Conversions for Liquids in 55-gallon Drums 52

Exhibit 6 – Volumes of Cylinders 53

Exhibit 7 – Common Liquid Measurements and Conversions 54

Exhibit 8 – V^2 Nominal Density Guidance Table 55

Exhibit 9 – Volume Conversion Table, Cubic Inches to Pints 56

Exhibit 10 – Volume Conversion for Partial 55-Gallon Drum (in pints) 57

Exhibit 11 – Visual Examination Equipment IDs 58

Exhibit 12 – Description of Liners 59

Appendix A – Schematic of Criticality Control for Secondary Waste A1

Appendix B – Waste Incompatibility by Item Description Code B1

Appendix C – List of LLW/MLLW Prohibited and Restricted Items (taken from LST-LLW-04) C1

Appendix D – Revision Log D1

AMWTP FACILITY OPERATIONS INSTRUCTION		
INST-FOI-17, Rev. 27	Issued: 09/03/13	Effective: 09/04/13
Facility Visual Examination Operations		

1.0 PURPOSE/SCOPE

This instruction contains directions for performing *visual examination* (VE; see def.) in the AMWTF, WMF-676, in accordance with the MP-TRUW-8.1, Certification Plan for INL Transuranic Waste, MP-TRUW-8.2, Quality Assurance Project Plan, applicable Hazardous Waste Management Act/Resource Conservation and Recovery Act (HWMA/RCRA) permit requirements, and CCP-PO-003, CCP Transuranic Authorized Methods for Payload Control (CCP CH-TRAMPAC).

The purpose of VE is to verify the physical form of the waste, prevent the shipment of prohibited items to Waste Isolation Pilot Plant (WIPP), confirm that the waste matches the *waste matrix code* (WMC; see def.) assigned to a waste *container* (see def.), and confirm that the waste matches the *waste stream* (see def.) description. Visual examination is also used to characterize waste, as it is packaged at the AMWTP.

This instruction is used in conjunction with other approved work control documents in the Treatment Facility.

This instruction applies to all personnel performing required VE and as required by any approved methods of work or permits to work used in conjunction with this instruction.

2.0 ROLES AND RESPONSIBILITIES

Performer	Responsibilities
Operations Technician (OT)	• Performs tasks in support of the VE • Performs tasks associated with glovebox operations, waste packaging, and container/waste handling and movement • Performs limited radiological surveys.
Data Verifier	• 2nd OT who performs verification of all data generated.
Shift Supervisor (SS)	• Ensures that individual training and qualification is current for the individual performing VE in accordance with QP-VE-0001, Visual Examiner • Notifies on-call environmental support with information regarding prohibited items • Performs post-job reviews, as necessary.

Performer	Responsibilities
Visual Examination Expert (VEE)	• Supports VE as appropriate and maintains responsibility for the overall direction and implementation of the VE at the facility.
Visual Examination Operator (VEO) (displayed in *Waste Tracking System* [WTS; see def.] as Operator 1 and Operator 2)	• Performs characterization examinations in accordance with this instruction • Unless otherwise specified, performs the steps in this instruction • Performs limited radiological surveys.

3.0 PRECAUTIONS AND LIMITATIONS/PREREQUISITES

3.1 Precautions and Limitations

3.1.1 Only Aquaset-II G, Micro-Cel E, and HG Absorb (HG Absorb for processing of elemental mercury only) shall be used as the absorbent. Other absorbents shall be approved by Environmental through permit required processes prior to purchase and use. Other chemical absorbents to be added to *transuranic waste* (TRU; see def.) shall be approved by Criticality Safety.

(HWMA/RCRA Permit; RPT-NFCS-09)

3.1.2 Prohibited/nonconforming items as referenced in Exhibit 4, List of TRU Prohibited Items, shall **NOT** be shipped to WIPP.

(MP-TRUW-8.2; CCP-PO-003)

3.1.3 Nonconformance reports (NCRs) shall be issued to document the identification of prohibited/nonconforming items or conditions.

(MP-TRUW-8.1; MP-TRUW-8.2; CCP-PO-003; HWMA/RCRA Permit)

3.1.4 Various *item description codes* (IDCs; see def.) are incompatible with each other and should be segregated as directed by the SS (Appendix B, Waste Incompatibility by Item Description Code, provides a list of incompatible IDCs).

(MP-TRUW-8.1; MP-TRUW-8.2; HWMA/RCRA Permit)

3.1.5 Sealed containers that are greater than 4 liters are prohibited except for waste material Type II.2. packaged in a metal container. Containers that are greater than 4 liters in size shall be fitted with a WIPP-approved filter vent or vented greater than 0.3 in.

(MP-TRUW-8.1; MP-TRUW-8.2; CCP-PO-003; HWMA/RCRA Permit)
(IDAPA 58.01.05.008 [40 CFR 264.177])

3.1.6 Prohibited items shall not be packaged using this instruction.

3.1.7 The VE process must ensure that all waste items are clearly identified, *packaging materials* (see def.) are identified, and waste is categorized into the appropriate waste material parameters.

(MP-TRUW-8.1; MP-TRUW-8.2)

3.1.8 Aerosol cans are allowed if they can be verified vented and empty by real-time radiography (RTR) and/or VE. Aerosol cans that are not vented and empty are prohibited.

(HWMA/RCRA Permit; MP-TRUW-8.1; MP-TRUW-8.2; CCP-PO-003)

3.1.9 The presence of radioactive pyrophorics in payload containers is restricted to ≤1% by weight.

(MP-TRUW-8.1; CCP-PO-003)

3.1.10 Radioactive pyrophorics in concentrations greater than 1% by weight and all nonradioactive pyrophorics shall be stabilized prior to placement in the payload container.

(MP-TRUW-8.1; CCP-PO-003)

3.1.11 Chemical constituents in a payload container shall conform to the lists of allowable materials in Tables 4.3-1 through 4.3-8 of CCP CH-TRAMPAC.

(CCP-PO-003)

3.1.12 The total quantity of the trace chemicals/materials (less than 1 weight%) for materials not listed in Tables 4.3-1 through 4.3-8 of the CCP CH-TRAMPAC shall be restricted to less than 5 weight%.

(CCP-PO-003)

3.1.13 Waste packaged using this instruction must be packaged to less than 1% beryllium by weight.

3.1.14 Hazardous wastes not occurring as co-contaminants with TRU wastes (non-mixed hazardous wastes) are not acceptable at WIPP.

(MP-TRUW-8.1; MP-TRUW-8.2)

3.1.15 The WTS record must be protected from damage or loss.

3.1.16 Two visual examiners who witnessed the packaging of the waste shall approve the data forms or packaging records attesting to the contents of the waste container.

(MP-TRUW-8.2)

3.2 Prerequisites

3.2.1 A pre-job brief has been performed in accordance with MP-COPS-9.17, Performing Pre-Job Briefings and Post-Job Reviews, as directed by the SS prior to performing work in this procedure.

3.2.2 The correct version of this procedure is being used.

3.2.3 There are two qualified VEOs available.

3.2.4 Visual Examination operators performing examinations are qualified in accordance with QP-VE-0001, Visual Examiner.

3.2.5 A VEE is available for support of the VE activities.

4.0 INSTRUCTIONS

4.1 General Instructions

NOTE 1: *The steps in each section may be performed out of sequence, or performed concurrently with other steps in the procedure as required during the VE.*

NOTE 2: *Visual Examination is used to characterize newly generated waste (NGW) at the time of generation (such as* secondary waste *[see def.]) to identify its physical form and verify the absence of prohibited items.*

NOTE 3: *Data changes or rework and requisite approvals are made by the individual(s) who originally collected that data **OR** by an equally qualified individual(s) authorized to change or rework data.*

4.1.1 Ensure that all prerequisites have been met.

4.1.2 Handle secondary waste for criticality control purposes in accordance with Appendix A, Schematic of Criticality Control for Secondary Waste.

4.1.3 Report any condition to the SS that could be adverse to the quality of the data.

4.1.4 Ensure that both VEs approving the data forms or packaging records have witnessed the packaging of the waste.

4.1.5 During the examination, describe all the contents of the waste, clearly identifying all discernible waste items, packaging materials, estimated or measured weights, and waste material parameters to provide an inventory list in WTS (see Exhibit 1, Waste Material Parameter Descriptions).

(MP-TRUW-8.1)

4.1.6 Refer to the following exhibits to determine weights, volumes, and other characterization items, as needed, to meet data quality objective requirements:

- Exhibit 2, Parameters and Weights of Commonly Identified Items (EXAMPLE)
- Exhibit 5, Volume Conversions for Liquids in 55-gallon Drums
- Exhibit 6, Volumes of Cylinders
- Exhibit 7, Common Liquid Measurements and Conversions
- Exhibit 8, V^2 Nominal Density Guidance Table
- Exhibit 9, Volume Conversion Table, Cubic Inches to Pints
- Exhibit 10, Volume conversion for Partial 55-gal Drum (in pints)
- Exhibit 11, Visual Examination Equipment IDs
- Exhibit 12, Description of Liners.

4.1.7 Ensure prohibited and nonconforming items are segregated from the waste stream, as applicable.

4.1.8 **IF** at any point in time the waste presented for VE does **NOT** meet WIPP acceptance requirements,
THEN STOP
AND notify the SS and VEE.

4.1.9 **GO TO** the appropriate section from the following table based on the task to be performed,
THEN RETURN to this step, if further activities will be performed:

Task	Section to Perform
Visual Examination of Newly Generated Waste Packages	4.2
Visual Examination of Newly Generated Waste Closure	4.3
Visual Examination and Repackaging of Boxline Legacy Waste	4.4
RTR/VE Update (Supplemental Analysis to RTR or VE Batch)	4.5
Repackaging Drums and Boxes	4.6
Post-Job Review	4.7
Abnormal and Infrequent Operations	4.8

4.2 Visual Examination of Newly Generated Waste Packages

NOTE: *A VEE may provide direction to assist in the VE. Any guidance or direction from the VEE related to the examination is entered in the "Visual Exam Comments" field.*

4.2.1 Ensure that a package ID number label is affixed to the outer packaging of the waste item.

4.2.2 Access the "VE Newly Generated Package" screen through the "Facility" menu.

4.2.3 Enter the package ID number in the "Package ID" field
AND press the tab key.

4.2.4 **IF** the correct procedure and/or revision are **NOT** displayed,
THEN perform the following:

4.2.4.1 Enter a comment in the "General" tab "Visual Exam Comment" field that the examination was performed to the current procedure and revision
AND provide the correct data.

4.2.4.1.1 Notify the SS that an update to the procedure and revision is required in WTS.

4.2.5 Select the "Destination" field
AND press the F9 key.

4.2.5.1 Select PSD as the destination container.

NOTE: *The following entry pertains to the destination container for the waste item. Source container information is contained in the "Source Container" tab.*

4.2.6 Select the "Container ID," field
AND enter the container ID.

4.2.7 Select the "Package Weight" field
AND enter the estimated weight for the waste package.

4.2.8 Select the "Equipment ID" field and press the F9 key.

4.2.8.1 Select "FAC-VNC."

NOTE: *Selection of "Other (describe)" in the "Waste Activity" field will create a pop-up field to the right of the entry.*

4.2.9 Select the "Waste Activity" field
AND select the appropriate activity.

4.2.9.1 **IF** the selection is "Other (describe),"
THEN enter a brief description in the "Describe" field.

4.2.10 Ensure that the name of "Operator 1" (the first VEO) is displayed.

4.2.11 Select the "Operator 2" field
AND press the F9 key.

4.2.11.1 Select the name of the second VEO.

4.2.12 Ensure the following data is entered or displayed, as applicable:

- Destination
- PSD Container ID
- Package Weight
- Equipment ID as "FAC-VNC"
- Waste activity
- Correct procedure and revision.

4.2.13 Select the "IDC" field
AND press the F9 key.

4.2.13.1 Select the appropriate IDC for the waste item, as listed in RPT-TRUW-05, Waste Matrix Code Reference Manual.

4.2.14 Select "Closure Method" field
AND select the correct outer closure method from the pull-down menu.

4.2.15 Select the "Source Container" tab.

4.2.15.1 **IF** there is a source container(s),
THEN perform the following:

4.2.15.1.1 Select "Yes" in the "Is there a source container?" field.

4.2.15.1.2 Manually enter the source container number(s), in the "Source Container Id" field.

4.2.15.1.3 Press the "Enter" key.

4.2.15.1.4 Observe that the correct location and IDC are displayed for the source container.

4.2.15.1.5 **IF** adding additional source container(s),
THEN REPEAT Steps 4.2.15.1.2 through 4.2.15.1.4.

4.2.15.2 **IF** the source of the waste was **NOT** a drum or box,
THEN perform the following:

4.2.15.2.1 Select "No" in the "Is there a source container" field.

4.2.15.2.2 Enter the source of the waste (i.e., sump cycle) in the "Visual Exam Comments" field on the "General" tab.

NOTE: *Waste not meeting any acceptance criterion or requirement for shipment to WIPP is prohibited.*

4.2.16 **IF** at any point in time the waste presented for VE does **NOT** meet WIPP waste acceptance criteria,
THEN STOP
AND notify the SS and VEE.

4.2.16.1 **WHEN** waste acceptance criteria has been satisfied,
THEN proceed with examination.

4.2.17 Ensure the absence of prohibited items and conditions (as listed in Exhibit 4) prior to the waste being presented for examination.

4.2.17.1 **WHEN** this condition is met,
THEN proceed with completion of the WTS form.

(MP-TRUW-8.1; CCP-PO-003; HWMA/RCRA Permit)

4.2.18 Select the "Liquid" tab.

NOTE 1: *The selection of a "No" response in the "Liquids present" field will render the remainder of the "Liquids" fields inactive. Under this condition, these fields will be set by WTS to required default values.*

NOTE 2: *Containers with* liquids *(see def.) in excess of Treatment, Storage, and Disposal Facility-Waste Acceptance Criteria (TSDF-WAC) limits are prohibited from supercompaction.*

4.2.18.1 Select "No" in the "Liquids Present?" field.

4.2.19 Select the "Contents 1" tab.

NOTE 1: *The selection of "No" in response to the "Sharp Objects?" question will cause the "Are Sharp Objects Protected?" field to auto-populate a "Yes" response.*

NOTE 2: *In accordance with Exhibit 4, the "Sharp Objects?" field includes heavy items that are not blocked or braced.*

4.2.19.1 **IF** sharp objects are **NOT** present,
THEN select "No" in the "Sharp Objects?" field.

4.2.19.1.1 Ensure the "Are Sharp Objects Protected?" field populates "Yes."

4.2.19.2 **IF** sharp objects are present,
THEN select "Yes" in the "Sharp Objects?" field.

4.2.19.2.1 Select "No" in the "Are Sharp Objects Protected?" field.

4.2.19.3 Select "No" in the "Prohibited Compressed Gas Present?" field.

NOTE 1: *Mercury in a liquid form is prohibited from supercompaction. Elemental mercury is segregated and processed (e.g., absorbed).*

NOTE 2: *Mercury can only be processed with Hg Absorb.*

4.2.19.4 Select "No" in the "Mercury Present?" field.

4.2.19.5 Select "No" in the "Explosives Present?" field.

NOTE: *Polychlorinated biphenyls (PCBs) are not processed through the Supercompactor*.

4.2.19.6 **IF** PCB-contaminated waste is **NOT** present, **THEN** select "No" in the "PCBs present?" field.

4.2.19.7 **IF** non-prohibited PCB-contaminated waste is present, **THEN** perform the following:

4.2.19.7.1 Select "Yes (acceptable)" in the "PCBs present?" field.

4.2.19.7.2 Enter a description of the non-prohibited PCBs in the "Comment" field.

4.2.19.7.3 Enter the weight of the non-prohibited PCBs in the "PCB Mass" field.

4.2.19.8 Select "No" in the "Pyrophorics present?" field.

4.2.19.9 Select "No" in the "Corrosives, Igniteables, or Reactives present?" field.

4.2.20 Select the "Contents 2" tab.

NOTE: *Wet cell batteries are WIPP acceptable ONLY if the battery can be demonstrated to be previously drained of any liquid.*

4.2.20.1 **IF** wet cell batteries are **NOT** present,
THEN select "No" in the "Wet Cell Batteries Present?" field.

4.2.20.2 **IF** WIPP-acceptable wet cell batteries are present,
THEN select "Yes" in the "Wet Cell Batteries Present?" field
AND enter the appropriate comment in the field to the right of the entry.

NOTE 1: *Entries of beryllium into WTS include the physical form (fines, metal pieces).*

(CCP-PO-003)

NOTE 2: *Beryllium is entered separately in the container inventory for reporting and tracking purposes, as applicable.*

4.2.20.3 **IF** beryllium contaminants are **NOT** present,
THEN select "No" in the "Beryllium Contaminants Present?" field.

4.2.20.4 **IF** beryllium contaminants are present,
THEN STOP work
AND notify the SS/VEE.

4.2.20.5 Select "No" in the "Hazardous-Only Waste Present?" field.

4.2.20.6 Select "No" in the "Is waste incompatible with backfill, packaging materials, or shipping container materials?" field.

4.2.20.7 Select "No" in the "Sealed containers over 4 liters?" field.

4.2.21 Select the "Waste Params" button.

4.2.21.1 Determine the waste parameter for the remaining waste by weight percent.

NOTE: *The "Total Percentage" for the waste parameter(s) entered equals 100%.*

4.2.21.2 Select the appropriate waste parameter by weight percent in the "Remaining Contents of Container" table (e.g., 100% cellulosics).

4.2.22 Determine the number of layers of confinement for the waste package.

NOTE: *The number of plastic bags for waste encompasses all the waste in the package, and are sealed closed to be counted as a layer of confinement.*

4.2.22.1 Enter the number of "Plastic bag(s) for waste" from the "Waste Items by Weight" table to document layers of confinement for the waste package.

4.2.23 **IF** adding additional waste items by weight or volume,
THEN select the waste from the appropriate quantity from the pick list, as applicable.

NOTE 1: *The notation of the items in the following step is not a WIPP requirement. The presence of any of these items is entered into the "Waste Material Items" table as waste items by weight or volume in the event that assay reveals the waste to be a candidate for* low-level waste *(LLW; see def.) processing and/or disposal.*

NOTE 2: *Appendix C, List of LLW/MLLW Prohibited and Restricted Items (taken from LST-LLW-04), has additional prohibited and restricted items which may be visible.*

4.2.24 **IF** any of the following items are present in the waste,
THEN ensure the items are accounted for in the "Waste Material Items" table:

- Etiological agents (i.e., blood, medical waste)
- Radioactive sealed sources (i.e., radiation instrument check sources, smoke detectors)
- Animal carcasses
- Asbestos

- Batteries (other than wet cell)
- Graphite
- Lab pack
- Lead (identify if elemental)
- Other.

4.2.24.1 See Appendix C for list of items, descriptions, and additional information/examples.

4.2.25 **IF** no additional waste items need to be added,
THEN select SAVE
AND GO TO Step 4.2.27.

4.2.26 **IF** a waste item is **NOT** included in the "Waste Material Items" lists,
THEN select the "Add material items" button in the "Remaining Contents of Container" block, as applicable.

4.2.26.1 Enter a brief description of the waste item in the "Description" field.

4.2.26.2 Select the "Item Type" field
AND select "Weight" or "Volume," as appropriate.

4.2.26.3 **IF** entering waste items by weight,
THEN enter the weight of the item.

4.2.26.4 **IF** entering item(s) by volume,
THEN obtain available reference data
AND enter the weight (per unit volume) from available reference data, or as provided by the VEE.

4.2.26.5 Select the "Quantity" field and enter the number of units.

NOTE: *The "Total Percentage" for each item entered equals 100%.*

4.2.26.6 Select the "Percentage" field opposite the correct "Parameter" field(s)
AND enter the appropriate waste parameter(s) by weight percent.

4.2.26.6.1 Select the next editable field to display the "Total Percentage."

4.2.26.7 Select the "SAVE" button.

4.2.26.8 **IF** entering additional items,
THEN select the "NEW ITEM" button,
AND REPEAT Steps 4.2.26.1 through 4.2.26.7 for each additional item, as necessary.

4.2.26.9 Select the "EXIT" button.

4.2.26.10 Select the "SAVE" button.

4.2.27 Select the "General" tab.

NOTE: *A description of the waste that was selected in the "Remaining Contents of Container" table on the "Waste Params" tab is entered in the "Visual Exam Comment" field on the "General" tab.*

4.2.28 Enter a description of the waste, (e.g., remaining waste by weight percent), in the "Visual Exam Comment" field.

4.2.29 Enter any additional comments about the waste item in the "Visual Exam Comment" field, as applicable.

4.2.30 Operator 1: After witnessing the VE/Packaging event, review the data for completeness and accuracy.

4.2.31 Operator 2: After witnessing the VE/Packaging event, review the data for completeness and accuracy.

4.2.32 **IF** there are any discrepancies,
THEN contact the SS for guidance.

4.2.33 Operator 1 (data generator): E-sign & Save the WTS record for approval of the data.

4.2.34 Operator 2 (data verifier): E-sign & Save the WTS record for approval of the data.

4.2.35 Verify that the VE date populates after both operators E-sign the data.

4.2.36 **IF** the drum is full or ready to be processed,
THEN GO TO Section 4.3.

4.3 Visual Examination of Newly Generated Waste Closure

NOTE 1: *This section is performed concurrently with INST-OI-24, Packaging Radioactive Waste, for the packaging of NGW items generated in support of characterization activities.*

NOTE 2: *Waste Tracking System summarizes the data for individual packages that were already characterized in accordance with Section 4.2 of this instruction and assigns the individual packages to the drum.*

4.3.1 Access the "VE Newly Generated Closure" screen from the Facility menu, as applicable.

4.3.2 Select the "SAA/In Process Container ID" field.

4.3.3 Enter the container ID number
AND press the F8 key to populate the data on the screen.

4.3.4 **IF** the correct procedure and/or revision are **NOT** displayed,
THEN perform the following:

4.3.4.1 Enter a comment in the "Visual Exam Comment" field on the "Closure" tab that the examination was performed to the current procedure and revision
AND provide the correct data.

4.3.4.2 Notify the SS that an update to the procedure and revision is required in WTS.

4.3.5 Select the "Equipment ID" and press the F9 key.

4.3.5.1 Select FAC-VNC.

4.3.6 Ensure the name of "Operator 1" (the first VEO) is displayed.

4.3.7 Select the "Operator 2" field and press the F9 key.

4.3.7.1 Select the name of the second VEO.

4.3.8 Select the "General" tab, as applicable.

NOTE: *A liner present response of "No" results in the corresponding liner fields not being required data entry fields.*

4.3.9 Select the "Rigid Liner Present?" field
AND select "No."

4.3.10 Select the "Layers of Confinement" field
AND enter the number of layers of confinement for the waste container.

(CCP-PO-003)

4.3.11 Select the "Fill Factor" field
AND enter the fill factor, using Exhibit 3, Fill Factor, as a guide.

(MP-TRUW-8.2)

4.3.12 Select the "Closure" tab.

4.3.12.1 Select "IDC Ok" field
AND select "Y" or "N," as applicable.

4.3.12.2 **IF** IDC is **NOT** correct,
THEN enter the recommended IDC in the "IDC Recommended" field.

4.3.12.3 Enter appropriate comments in the "IDC Change Reason" field.

4.3.13 Select the "Closure Method" field
AND select the correct outer layer closure method.

4.3.14 Select the "Waste Summary" tab
AND review the waste parameter data in the "Remaining Contents" table.

4.3.15 Select the "Closure" tab.

4.3.15.1 Select the "Visual Exam Comment" field
AND enter a complete description of the waste as remaining waste by weight percent.

4.3.16 Select the "Waste Params" button.

NOTE: *The "Total Percentage" for the Waste Parameter(s) selected equals 100% and will reflect the waste description provided in Step 4.3.15.1*.

4.3.16.1 Select the appropriate waste parameter(s) in the "Remaining Contents of Container" table (e.g., 100% cellulosics).

NOTE: *Additional waste items or packaging material data will not be added to the record UNLESS the material was added to the container at closure*.

4.3.16.2 **IF** entering additional waste items by weight or volume,
THEN select the waste from the appropriate pick list, as applicable.

4.3.16.3 **IF** entering packaging material,
THEN select the packaging from the appropriate pick list, as applicable.

4.3.16.4 Select the "SAVE" button to save the data.

4.3.17 Enter any additional comments about the VE, as applicable.

4.3.18 Operator 1: After witnessing the VE/Packaging event, review the data for completeness and accuracy.

4.3.19 Operator 2: After witnessing the VE/Packaging event, review the data for completeness and accuracy.

4.3.20 **IF** there are any discrepancies,
THEN contact the SS for guidance.

4.3.21 Operator 1 (data generator): E-sign & Save the WTS record for approval of the data.

(MP-TRUW-8.2)

4.3.22 Operator 2 (data verifier): E-sign & Save the WTS record for approval of the data.

4.3.23 Close the batch by performing the following:

4.3.23.1 Select the "BATCH" button on the Visual Examination screen.

4.3.23.2 Select the "CLOSE" button on the Batch Details screen.

4.3.23.3 E-sign and save the record.

4.4 Visual Examination and Repackaging of Boxline Legacy Waste

4.4.1 **IF** using the Integrated Control System (ICS) Mimic Screen,
THEN ensure container ID matches in WTS and ICS
AND verify port location is correct.

OR

4.4.2 Access the "VE Boxline" screen from the Facility menu
AND enter the Container ID,
THEN press F8, as applicable.

4.4.3 **IF** the correct procedure and/or revision are **NOT** displayed,
THEN perform the following:

4.4.3.1 Enter a comment in the "IDC Verification" tab "Visual Exam Comment" field that the examination was performed to the current procedure and revision and provide the correct data.

4.4.3.2 Notify the SS that an update to the procedure and/or revision is required in WTS.

4.4.4 Select the "Equipment" field
AND press F9.

4.4.4.1 Select "VE BiD RPCK."

4.4.5 Ensure the name of Operator 1 (data generator) is auto-populated.

4.4.6 Select the "Operator 2" field
AND press the F9 key.

4.4.6.1 Select the name of Operator 2 (data verifier).

4.4.7 Select the "General" tab.

4.4.7.1 Ensure Layers of Confinement as zero.

4.4.7.2 Ensure the Closure Method as "No Bags."

NOTE: *The source container is the container that the waste was generated from, such as the waste box. Identifying the source container is important to ensure the proper characterization of the waste and to maintain traceability.*

4.4.8 Select the "Source Container" tab.

4.4.8.1 **IF** there is a source container(s),
THEN perform the following:

4.4.8.1.1 Select "Yes" in the "Is there a source container?" field.

4.4.8.1.2 Manually enter the source container number in the "Source Container Id" field.

4.4.8.1.3 Press the "Enter" key.

4.4.8.1.4 Observe that the correct location and IDC are displayed for the source container.

4.4.8.1.5 **IF** adding additional source container(s),
THEN REPEAT Steps 4.4.8.1.2 through 4.4.8.1.4, as applicable.

4.4.8.1.6 **IF** no additional source containers are added,
THEN select the field of the previous source container entry.

4.4.8.2 **IF** the source of the waste was **NOT** a container,
THEN perform the following:

4.4.8.2.1 Select "No" in the "Is there a source container?" field.

4.4.8.2.2 Enter a comment in the "IDC Verification" tab "Visual Exam Comment" field detailing the source or origin of the waste.

NOTE: *Waste not meeting any acceptance criterion or requirement for shipment to WIPP is prohibited.*

4.4.9 **IF** at any point in time the waste presented for VE does **NOT** meet WIPP acceptance requirements,
THEN STOP
AND notify the SS and VEE.

4.4.10 **WHEN** acceptance requirements have been satisfied,
THEN proceed with examination.

4.4.11 Ensure the absence of prohibited items and conditions (as listed in Exhibit 4) as the waste is presented for examination.

4.4.11.1 **WHEN** this condition is met**,**
THEN proceed with completion of the WTS form**.**

(MP-TRUW-8.1; CCP-PO-003; HWMA/RCRA Permit)

4.4.12 Select the "Liquid" tab.

NOTE 1: *The selection of a "No" response in the "Liquids Present?" field will render the remainder of the "Liquids" fields inactive. Under this condition, these fields will be set by WTS to standard default values.*

NOTE 2: *Containers with liquids in excess of TSDF-WAC limits are prohibited from supercompaction.*

4.4.12.1 Select "No" in the "Liquids Present?" field.

4.4.13 Select the "Contents 1" tab.

NOTE 1: *The selection of "No" in response to the "Sharp Objects?" question will cause the "Are Sharp Objects Protected?" field to auto-populate a "Yes" response.*

NOTE 2: *In accordance with Exhibit 4, the "Sharp Objects?" subject field includes heavy items that are not blocked or braced.*

4.4.13.1 **IF** sharp objects are **NOT** present,
THEN select "No" in the "Sharp Objects?" field.

4.4.13.1.1 Ensure the "Are Sharp Objects Protected?" field populates "Yes."

4.4.13.2 **IF** sharp objects are present,
THEN select "Yes" in the "Sharp Objects?" field.

4.4.13.2.1 Select "No" in the "Are Sharp Objects Protected?" field.

4.4.13.3 Select "No" in the "Prohibited compressed gas present?" field.

NOTE 1: *Mercury in a liquid form is prohibited from supercompaction. Elemental mercury is segregated and processed (e.g., absorbed).*

NOTE 2: *Mercury can only be processed with Hg Absorb.*

4.4.13.4 **IF** mercury is **NOT** present
THEN select "No" in the "Mercury Present?" field.

4.4.13.5 **IF** mercury is present
THEN select "Yes" in the "Mercury Present?" field
AND enter appropriate comment in the comment field to right of the entry (e.g., mercury has been absorbed).

4.4.13.6 Select "No" in the "Explosives Present?" field.

NOTE: *Polychlorinated biphenyls are not processed through the Supercompactor.*

4.4.13.7 **IF** PCB-contaminated waste is **NOT** present,
THEN select "No" in the "PCBs present?" field.

4.4.13.7.1 **IF** PCB-contaminated waste is present,
THEN STOP work
AND notify the SS/VEE.

4.4.13.8 Select "No" in the "Pyrophorics present?" field.

4.4.13.9 Select "No" in the "Corrosives, Ignitables, or Reactives Present?" field.

4.4.14 Select the "Contents 2" tab.

NOTE: *Wet cell batteries are WIPP acceptable ONLY if the battery can be demonstrated to be previously drained of any liquid.*

4.4.14.1 **IF** wet cell batteries are **NOT** present,
THEN select "No" in the "Wet Cell Batteries Present?" field.

4.4.14.2 **IF** WIPP-acceptable wet cell batteries are present,
THEN select "Yes" in the "Wet Cell Batteries Present?" field
AND enter the appropriate comment in the field to the right of the entry.

NOTE 1: *Entries of beryllium into WTS include the physical form (fines, metal pieces).*

(CCP-PO-003)

NOTE 2: *Beryllium is entered separately in the container inventory for reporting and tracking purposes, as applicable.*

4.4.14.3 **IF** beryllium contaminants are **NOT** present,
THEN select "No" in the "Beryllium Contaminants Present?" field.

4.4.14.4 **IF** beryllium contaminants are present,
THEN STOP work
AND notify the SS/VEE.

4.4.14.5 Select "No" in the "Hazardous-Only Waste Present?" field.

4.4.14.6 Select "No" in the "Is waste incompatible with backfill, packaging materials, or shipping container materials?" field.

4.4.14.7 Select "No" in the "Sealed containers over 4 liters?" field.

4.4.15 Select the "IDC Verification" tab.

4.4.15.1 **IF** IDC is correct,
THEN select "Yes" in the "Is IDC Correct?" field.

4.4.15.2 **IF** IDC is **NOT** correct,
THEN select "No" in the "Is IDC Correct?" field.

4.4.15.2.1 Enter "Recommended IDC" in the "Recommended IDC" field.

4.4.15.2.2 Enter comments in the "IDC Change Reason" field.

NOTE: *During examination, all the contents of the waste container, including all waste items, packaging materials, and waste material parameters are identified to provide an inventory list of the waste container contents.*

(MP-TRUW-8.1; MP-TRUW-8.2; CCP-PO-003)

4.4.16 Enter a complete description of the waste as remaining waste by weight percent in the "Visual Exam Comment" field.

(MP-TRUW-8.1)

4.4.17 Select the "Waste Params" button.

NOTE: *The "Total Percentage" for the waste parameter(s) selected equals 100% and will reflect the waste description provided in Step 4.4.16.*

4.4.17.1 Select the appropriate waste parameter(s) in the "Remaining Contents of Container" table (e.g., 100% cellulosics).

4.4.17.2 **IF** entering additional waste items by weight or volume, **THEN** select the waste from the appropriate pick list, as applicable.

NOTE 1: *The notation of the items in the following step is not a WIPP requirement. The presence of any of these items is entered into the "Waste Material Items" table as waste items by weight or volume in the event that assay reveals the waste to be a candidate for LLW processing and/or disposal.*

NOTE 2: *Appendix C has additional prohibited and restricted items which may be visible.*

4.4.18 **IF** any of the following items are present in the waste, **THEN** ensure the items are accounted for in the waste inventory, as applicable:

- Etiological agents (i.e., blood, medical waste)
- Radioactive sealed sources (i.e., radiation instrument check sources, smoke detectors)
- Animal carcasses
- Asbestos
- Batteries (other than wet cell)
- Graphite

- Lab pack
- Mercury
- Lead (identify if elemental)
- Other.

4.4.18.1 See Appendix C for list of items, descriptions, and additional information/examples.

4.4.19 **IF** no additional waste items need to be added,
THEN select SAVE,
AND GO TO Step 4.4.22 to enter fill factor
WITHOUT RETURNING TO this step.

4.4.20 **IF** a waste item is **NOT** included in the "Waste Material Items" lists,
THEN select the "Add material items" button in the "Remaining Contents of Container" block, as applicable.

4.4.20.1 Enter a brief description of the waste item in the "Description" field.

4.4.20.2 Select the "Item Type" field
AND select "Weight" or "Volume," as appropriate.

4.4.20.3 **IF** entering waste items by weight,
THEN enter the weight of the item.

4.4.20.4 **IF** entering item(s) by volume,
THEN obtain available reference data
AND enter the weight (per unit volume) from available reference data, or as provided by the VEE.

4.4.20.5 Select the "Quantity" field
AND enter the number of units.

NOTE: *The "Total Percentage" for each item entered equals 100%.*

4.4.20.6 Select the "Percentage" field opposite the correct "Parameter" field(s)
AND enter the appropriate waste parameter(s) by weight percent.

4.4.20.6.1 Select the next editable field to display the "Total Percentage."

4.4.20.7 Select the "SAVE" button.

4.4.20.8 **IF** entering additional items,
THEN select the "NEW ITEM" button
AND REPEAT Steps 4.4.20.1 through 4.4.20.7 for each additional item, as necessary.

4.4.20.9 Select the "EXIT" button.

4.4.20.10 Select the "SAVE" button.

4.4.21 Enter any additional comments about the VE in the "Visual Exam Comment" field, as applicable.

4.4.22 Select "General" tab.

4.4.22.1 Select the "Fill Factor" field
AND enter the fill factor, using Exhibit 3 as a guide.

4.4.23 Operator 1: After witnessing the VE/Packaging event, review the data for completeness and accuracy.

4.4.24 Operator 2: After witnessing the VE/Packaging event, review the data for completeness and accuracy.

4.4.25 Operator 1 (data generator): E-sign & Save the WTS record for approval of the data and drum loading.

4.4.26 Operator 2 (data verifier): E-sign & Save the WTS record for approval of the data and drum loading.

4.4.27 Ensure that the VE date and closure dates have populated.

4.5 RTR/VE Update (Supplemental Analysis to RTR or VE Batch)

NOTE 1: *Waste Tracking System will only allow the performance of an RTR/VE update (RVU) if the container has a gross weight OR a valid assay with an "analysis status" of "Pass," as indicated on the respective batch screen.*

NOTE 2: *The RVU is used to update the final waste container configuration after processing of the drum. The RVU generates an amended analysis that is linked to the original batch data report, RTR, or VE, as applicable, for the waste container.*

NOTE 3: *If available, the recording is reviewed for the packaging configuration of the waste container and the location and nature of the nonconformance.*

4.5.1 Access TrackWise to review the corrective actions for the waste container as documented in the NCR, as applicable.

4.5.2 Check that the container has a gross weight
OR a valid assay with an "Analysis Stat" of "Pass," prior to performing an RVU.

4.5.3 Access "Visual Examination" from the "Facility menu"
AND select "RTR/VE Update."

4.5.4 Select "Container ID" field
AND enter the container number,
THEN press the F8 key to populate the data.

NOTE 1: *Waste Tracking System records for which no supplemental analysis has been performed will not display the "View/Update" and "New" pop-up selection options.*

NOTE 2: *The View/Update selection appears and applies when performing rework on an analysis that is currently associated with the container. The New Analysis is used when a new and separate analysis is desired on a container that has a pre-existing RVU analysis associated with the container.*

4.5.5 **IF** the pop-up screen requesting a response for "View/Update" or "New Analysis" appears,
THEN select the appropriate response to identify the RVU analysis type.

4.5.6 Select the "Equipment ID" field
AND press F9.

4.5.6.1 Select "VE NGW C FAC," as the Equipment ID.

NOTE 1: *The correct affected batch should be documented on the NCR, as applicable.*

NOTE 2: *The correct affected batch and affected analysis is normally the last valid VE, RTR or RVU event performed on the container prior to the RVU event.*

4.5.7 Select the correct affected batch and affected analysis identified, as applicable.

4.5.8 **IF** there is no affected batch or affected analysis listed,
THEN perform the following:

4.5.8.1 **STOP** work.

4.5.8.2 Notify the SS.

4.5.8.3 Proceed only when directed by the SS.

4.5.9 Observe the VE Weight from the affected analysis.

4.5.10 Ensure the "Operator 1" (data generator) name is displayed.

4.5.11 Select the "Operator 2"field
AND press the F9 key.

4.5.11.1 Select "the name of Operator 2 (data verifier).

4.5.12 **IF** performing RVU for adding a sling or catch pan,
THEN perform the following:

4.5.12.1 Select the "Waste Params" button.

4.5.12.2 Select the appropriate packaging material and enter the quantity, as applicable.

4.5.12.3 Update the waste container inventory and waste parameters for the processing of the waste container, as applicable.

4.5.12.4 Select the "SAVE" button.

4.5.13 Select the "IDC Verification" tab.

4.5.14 Select the "IDC Ok" field
AND select "Yes" or "No," as applicable.

NOTE: *The responsible manager entered on an NCR for an IDC, WMC, or approved waste stream number change is the Acceptable Knowledge (AK) manager. An AK evaluation is required for any suggested IDC, WMC, or approved waste stream changes*.

4.5.14.1 **IF** the selection is "No,"
THEN enter the "Recommended IDC" in the "IDC Recommended" field.

4.5.14.2 Enter appropriate comments in the "IDC Change Reason" field.

4.5.14.3 Select the "Comments" field
AND enter appropriate comments, as applicable.

4.5.14.4 Enter that the waste container was processed in accordance with the applicable NCR in the "Comments" field, as applicable.

4.5.15 Select the "Closure" tab.

4.5.15.1 Select the "Layers Of Confinement" field
AND update the layers of confinement for the waste container, as applicable.

4.5.15.2 Select the "Closure Method" field
AND enter the outer layer closure method(s).

4.5.15.3 Select the "New Steel Lid" field
AND enter "Yes" or "No" as appropriate.

4.5.15.4 Select the "Overpack Required" field
AND enter "Yes" or "No" as appropriate.

4.5.16 Operator 1: After witnessing the VE/Packaging event, review the data for completeness and accuracy.

4.5.17 Respond to any incomplete fields as appropriate.

4.5.18 Operator 2: After witnessing the VE/Packaging event, review the data for completeness and accuracy.

4.5.18.1 **IF** there are any discrepancies,
THEN contact the SS for guidance.

4.5.18.1.1 **WHEN** concurrence is achieved,
THEN proceed.

4.5.19 Operator 1 (data generator): E-sign & Save WTS for acceptance of the data and container loading.

NOTE: *A "Yes" response to the following query, will populate the closure date with the E-signature date. A "No" response will populate the closure date with the container original pack date.*

4.5.19.1 Observe the message box, "Was the container opened?"
AND select "Yes" or "No."

4.5.20 Operator 2 (data verifier): E-sign & Save WTS for acceptance of the data and container loading.

4.5.21 Ensure that the VE date and closure dates have populated after E-signing the record, as applicable.

4.5.22 Ensure the appropriate filter model(s) for the waste container are entered in the "Filters" screen
AND ensure the screen is updated, as applicable.

(CCP-PO-003)

4.5.23 Update the NCR, if applicable, to reflect the processing of the waste container.

4.6 Repackaging Drums and Boxes

NOTE: *This section may also be used for waste generated during cell entries.*

4.6.1 Access the "Facility," "Visual Examination," and "VE Boxline" screens, as applicable:

4.6.1.1 Select the "Container ID" field
AND enter the container number, as applicable.

4.6.1.1.1 Press F8 to auto-populate the data.

4.6.1.2 **IF** the correct procedure and/or revision are **NOT** displayed, **THEN** perform the following:

4.6.1.2.1 Enter a comment in the "IDC Verification" tab "Visual Exam Comment" field that the examination was performed to the current procedure and revision and provide the correct data.

4.6.1.2.2 Notify the SS that an update to the procedure and/or revision is required in WTS.

4.6.1.3 Select the "Equipment ID" field
AND press F9.

4.6.1.3.1 Select "VE BiD RPCK" **OR**
"VE DiD RPCK," as appropriate.

4.6.2 Ensure the name of Operator 1 (data generator) is auto-populated.

4.6.3 Select the "Operator 2" field and press F9.

4.6.3.1 Select the name of Operator 2 (data verifier).

4.6.4 Select the "General" tab.

4.6.4.1 Select the "Layers of Confinement" field
AND enter the number of layers of confinement.

4.6.4.2 Select the "Closure Method" field
AND select correct closure method.

4.6.4.3 Observe the "Rigid Liner Present?" field populates "No."

4.6.5 Select the "Source Container" tab.

NOTE: *The source container is the container that the waste was generated from, such as the waste box. Identifying the source container is important to ensure the proper characterization of the waste and to maintain traceability.*

4.6.5.1 **IF** there is a source container(s),
THEN perform the following:

4.6.5.1.1 Select "Yes" in the "Is there a source container?" field.

4.6.5.1.2 Manually enter the source container number(s), in the appropriate field.

4.6.5.1.3 Press the "Enter" key.

4.6.5.1.4 Observe that the correct location and IDC are displayed for the source container.

4.6.5.1.5 **IF** adding additional source container(s),
THEN REPEAT Steps 4.6.5.1.2 through 4.6.5.1.4, as applicable.

4.6.5.1.6 **IF** no additional source containers are added,
THEN select the field of the previous source container entry.

4.6.5.2 **IF** the source of the waste was **NOT** a container,
THEN select "No" in the "Is there a source container?" field
AND enter a comment in the "IDC Verification" tab "Visual Exam Comment" field detailing the source or origin of the waste.

NOTE: *Waste not meeting any acceptance criterion or requirement for shipment to WIPP is prohibited.*

4.6.5.3 **IF** at any point in time the waste presented for VE does **NOT** meet WIPP acceptance requirements,
THEN STOP
AND notify the SS and VEE.

4.6.5.4 **WHEN** acceptance requirements have been satisfied,
THEN proceed with examination.

4.6.6 Ensure the absence of prohibited items and conditions (as listed in Exhibit 4) as the waste is presented for examination.

4.6.6.1 **WHEN** this condition is met,
THEN proceed with completion of the WTS form.

(MP-TRUW-8.1; CCP-PO-003; HWMA/RCRA Permit)

4.6.7 Select the "Liquid" tab.

NOTE: *The selection of a "No" response in the "Liquids Present?" field will render the remainder of the "Liquids" fields inactive. Under this condition, these fields will be set by WTS to standard default values.*

4.6.7.1 Select "No" in the "Liquids Present?" field.

4.6.8 Select the "Contents 1" tab.

NOTE 1: *The selection of "No" in response to the "Sharp Objects?" question will cause the "Are Sharp Objects Protected?" field to auto-populate a "Yes" response.*

NOTE 2: *In accordance with Exhibit 4, the "Sharp Objects?" subject field includes heavy items that are not blocked or braced.*

4.6.8.1 **IF** sharp objects are **NOT** present,
THEN select "No" in the "Sharp Objects?" field.

4.6.8.1.1 Ensure the "Are Sharp Objects Protected?" field populates "Yes."

4.6.8.2 **IF** sharp objects are present,
THEN select "Yes" in the "Sharp Objects?" field.

4.6.8.2.1 Select "No" in the "Are Sharp Objects Protected?" field.

4.6.8.3 Select "No" in the "Prohibited Compressed Gas Present?" field.

NOTE: *Mercury in a liquid form is prohibited from supercompaction. Elemental mercury is segregated and treated prior to packaging.*

4.6.8.4 **IF** mercury is **NOT** present,
THEN select "No" in the "Mercury Present?" field.

4.6.8.5 **IF** mercury is present,
THEN select "Yes" in the "Mercury Present?" field
AND enter appropriate comment in the comment field to right of the entry (e.g., mercury has been absorbed).

4.6.8.6 Select "No" in the "Explosives Present?" field.

NOTE: *Polychlorinated biphenyls are not processed through the Supercompactor.*

4.6.8.7 **IF** PCB-contaminated waste is **NOT** present,
THEN select "No" in the "PCBs Present?" field.

4.6.8.8 **IF** PCB-contaminated waste is present,
THEN STOP work
AND notify the SS/VEE.

4.6.8.9 Select "No" in the "Pyrophorics Present?" field.

4.6.8.10 Select "No" in the "Corrosives, Ignitables, or Reactives Present?" field.

4.6.9 Select the "Contents 2" tab.

NOTE: *Wet cell batteries are WIPP acceptable ONLY if the battery can be demonstrated to be previously drained of any liquid.*

4.6.9.1 **IF** wet cell batteries are **NOT** present,
THEN select "No" in the "Wet Cell Batteries Present?" field.

4.6.9.2 **IF** WIPP-acceptable wet cell batteries are present,
THEN select "Yes" in the "Wet Cell Batteries Present?" field
AND enter the appropriate comment in the field to the right of the entry.

NOTE 1: *Entries of beryllium into WTS include the physical form (fines, metal pieces).*

(CCP-PO-003)

NOTE 2: *Beryllium is entered separately in the container inventory for reporting and tracking purposes, as applicable.*

4.6.9.3 **IF** beryllium contaminants are **NOT** present,
THEN select "No" in the "Beryllium Contaminants Present?" field.

4.6.9.4 **IF** beryllium contaminants are present,
THEN STOP work
AND notify the SS/VEE.

4.6.9.5 Select "No" in the "Hazardous-Only Waste Present?" field.

4.6.9.6 Select "No" in the "Is waste incompatible with backfill, packaging materials, or shipping container materials?" field.

4.6.9.7 Select "No" in the "Sealed containers over 4 liters?" field.

4.6.10 Select the "IDC Verification" tab.

4.6.10.1 **IF** IDC is correct,
THEN select "Yes" in the "Is IDC Correct?" field.

4.6.10.2 **IF** IDC is **NOT** correct,
THEN select "No" in the "Is IDC Correct?" field.

4.6.10.2.1 Enter "Recommended IDC" in the "Recommended IDC" field.

4.6.10.2.2 Enter comments in the "IDC Change Reason" field.

NOTE: *During examination, all the contents of the waste container, including all waste items, packaging materials, and waste material parameters are identified to provide an inventory list of the waste container contents.*

(MP-TRUW-8.1; MP-TRUW-8.2; CCP-PO-003)

4.6.11 Enter a complete description of the waste as remaining waste by weight percent in the "Visual Exam Comment" field.

(MP-TRUW-8.1)

4.6.12 Select the "Waste Params" button.

NOTE: *The "Total Percentage" for the Waste Parameter(s) selected equals 100% .and will reflect the waste description provided in Step 4.6.11*.

4.6.12.1 Select the appropriate waste parameter(s) in the "Remaining Contents of Container" table (e.g., 100% cellulosics).

4.6.12.2 **IF** entering additional waste items by weight or volume,
THEN select the waste from the appropriate pick list, as applicable.

NOTE: *The notation of the items in the following step is not a WIPP requirement. The presence of any of these items is entered into the "Waste Material Items" table as waste items by weight or volume in the event that assay reveals the waste to be a candidate for LLW processing and/or disposal.*

4.6.13 **IF** any of the following items are present in the waste,
THEN ensure the items are accounted for in the waste inventory, as applicable:

- Etiological agents (i.e., blood, medical waste)
- Radioactive sealed sources (i.e., radiation instrument check sources, smoke detectors)
- Animal carcasses
- Asbestos
- Batteries (other than wet cell)
- Graphite
- Lab pack
- Lead (identify if elemental)
- Other.

4.6.13.1 See Appendix C for list of items, descriptions, and additional information/examples.

4.6.14 **IF** no additional waste items need to be added,
THEN select SAVE
AND GO TO Step 4.6.18 to enter fill factor
WITHOUT RETURNING TO this step.

4.6.15 **IF** a waste item is **NOT** included in the "Waste Material Items" lists,
THEN select the "Add material items" button in the "Remaining Contents of Container" block, as applicable.

4.6.15.1 Enter a brief description of the waste item in the "Description" field.

4.6.15.2 Select the "Item Type" field
AND select "Weight," or "Volume," as appropriate.

4.6.15.3 **IF** entering waste items by weight,
THEN enter the weight of the item.

4.6.15.4 **IF** entering item(s) by volume,
THEN obtain available reference data
AND enter the weight (per unit volume) from available reference data, or as provided by the VEE.

4.6.15.5 Select the "Quantity" field and enter the number of units.

NOTE: *The "Total Percentage" for each item entered equals 100%*.

4.6.15.6 Select the "Percentage" field opposite the correct "Parameter" field(s)
AND enter the appropriate waste parameter(s) by weight percent.

4.6.15.6.1 Select the next editable field to display the "Total Percentage."

4.6.15.7 Select the "SAVE" button.

4.6.15.8 **IF** entering additional items,
THEN select the "NEW ITEM" button
AND REPEAT Steps 4.6.15.1 through 4.6.15.7 for each additional item, as necessary.

4.6.15.9 Select the "EXIT" button.

4.6.16 Select the SAVE button.

4.6.17 Enter any additional comments about the VE in the "Visual Exam Comment" field, as applicable.

4.6.18 Select "General" tab.

4.6.18.1 Select the "Fill Factor" field and enter the fill factor, using Exhibit 3 as a guide.

4.6.19 Operator 1: After witnessing the VE/Packaging event, review the data for completeness and accuracy.

4.6.20 Operator 2: After witnessing the VE/Packaging event, review the data for completeness and accuracy.

4.6.21 Operator 1 (data generator): E-sign & Save the WTS record for approval of the data and drum loading.

4.6.22 Operator 2 (data verifier): E-sign & Save the WTS record for approval of the data and drum loading.

4.6.23 Verify that the VE date populates after both operators E-sign the data.

4.6.24 Close the batch by performing the following:

4.6.24.1 Select the "BATCH" button on the "Visual Examination" screen.

4.6.24.2 Select the "CLOSE" button on the "Batch Details" screen.

4.6.24.3 E-sign and save the record.

4.7 Post-Job Review

4.7.1 SS: Perform a post-job review in accordance with MP-COPS 9.17, if necessary.

4.8 Abnormal and Infrequent Operations

NOTE: *The following steps are performed when the catch pan and/or slings were added after a VE event, either prior to OR after assay.*

4.8.1 **IF** a catch pan or sling must be added to a damaged drum
AND the drum has a gross weight or has a valid assay,
THEN perform the following:

NOTE: *The RVU will add the weight of the catch pan or slings to the gross weight of the* puck *(see def.) as packaging.*

4.8.1.1 **GO TO** Section 4.5 and perform the applicable steps to add the catch pan and/or slings to the drum inventory as packaging material
WITHOUT RETURNING TO this step.

4.8.2 **IF** a catch pan must be added to a damaged drum
AND the drum does **NOT** have a gross weight or a valid assay (indicated by a "Pending Waste Calc" Analysis Status),
THEN perform the following:

4.8.2.1 Access the VE Boxline screen on WTS.

4.8.2.1.1 Enter the container ID
AND press F8.

4.8.2.1.2 Select the "Operator 2" field
AND press F9,
THEN select the name of Operator 2.

4.8.2.1.3 Verify all data previously entered is complete and correct.

4.8.2.1.4 Select the "Waste Params" button
AND enter the catch pan(s) in the "Packaging Materials, Material Item" block.

4.8.2.1.5 Select SAVE.

4.8.3 Enter a comment in the Visual Exam "Comment" field that a catch pan was added to the waste parameters.

4.8.4 Operator 1 (data generator): E-sign & Save the WTS record for approval of the data.

4.8.5 Operator 2 (data verifier): E-sign & Save the WTS record for approval of the data.

4.8.6 **IF** the drum is severely damaged and must be repackaged into a new drum,
THEN perform the following:

4.8.6.1 Close any open VE boxline (VEB) batches to ensure the repackaged drum is **NOT** placed in an existing open VEB batch or with any undamaged containers.

NOTE: *Visual Examination expert may support the VEO in creating a new VEB batch analysis in the new VEB batch from the original non-reported analysis of the repackaged container, as necessary. The new analysis from the repackaged container is accumulated with other repackaged containers to lessen impacts on the validation process.*

4.8.7 **GO TO** Section 4.6 to complete the task.

5.0 DEFINITIONS

Container. A unit for characterization subject to radiography or direct VE. Typically, this is also identified as the "outermost container" (e.g., 55-, 83-/85-, or 100-gallon drum) in the context of radiography or direct VE.

Item description code. A three-character alphanumeric code that describes each waste form matrix.

Liquid, observable (or liquid). Liquid that can be seen by a trained radiography operator or by a trained individual performing VE of the waste. This term can be implemented consistently during characterization regardless of waste type.

Low-level waste. (1) Radioactive waste that is not high-level waste, spent nuclear fuel, transuranic waste , byproduct material (as defined in section 11.e.[2] of the Atomic Energy Act of 1954, as amended), or naturally occurring radioactive material; (2) Waste that contains a radioactive contaminant and is not classified as high-level waste, TRU waste, spent nuclear fuel, or by-product material by DOE Order 435.1, Radioactive Waste Management.

Packaging material. Packaging material consists of the drum, 90-mil liner, and the two outermost layers of confinement that are used as liners for the waste container.

Puck. A compacted container of characterized waste. The pucks are loaded directly into the *puck drum* (see def.).

Puck drum. 100-gal drum used as an overpack container for the compacted waste (pucks).

Secondary waste. Waste generated from normal operations and/or closure processes (e.g., personal protective equipment, floor sweepings, rags/wipes from routine maintenance or decontamination activities, and equipment).

Summary Category Group. Group that relates to the final physical form of the waste consisting of three broad categories: (1) *S3000 - Homogeneous solids* (see def.); (2) *S4000 - Soil/Gravel* (see def.); and (3) *S5000 – Debris* (see def.).

Summary Category S3000 – Homogeneous solids. Homogeneous solids are defined as solid materials, excluding soil, that do not meet the New Mexico Environmental Department criteria for classification as debris (20.4.1.800 NMAC (incorporating 40 CFR §268.2[g] and [h])). Included in the series of homogeneous solids are inorganic process residues, inorganic sludges, salt waste, and pyrochemical salt waste. Other waste streams are included in this summary category group (SCG) based on the specific waste stream types and final waste form. This SCG is expected to contain toxic metals and spent solvents. This category includes wastes that are at least 50 % by volume homogenous solids.

Summary Category S4000 – Soils/Gravel. This SCG includes S4000 waste streams that are at least 50 % by volume soil/gravel. This SCG is expected to contain toxic metals.

Summary Category S5000 – Debris. This SCG includes heterogeneous waste that is at least 50 % by volume materials that meet the criteria specified in 20.4.1.800 NMAC (incorporating 40 CFR §268.2 [g]). Debris means solid material exceeding a 2.36 in. (60 millimeter) particle size that is intended for disposal and that is:

- A manufactured object
- Plant or animal matter
- Natural geologic material.

An item smaller than 2.36 in. in size may be considered debris, if the debris is a manufactured object and if it is not in the category of S3000 or S4000 material.

Transuranic waste. Radioactive waste containing more than 100 nanoCuries (nCi) (3700 becquerels) of transuranic isotope content per gram of waste, except for (1) high-level radioactive waste; (2) waste that the Secretary of Energy has determined, with the concurrence of the administrator of the Environmental Protection Agency, does not need the degree of isolation required by the 40 CFR 191, Management and Disposal of Spent Nuclear Fuel, High-Level and Transuranic Radioactive Wastes, disposal regulations; or (3) waste that the Nuclear Regulatory Commision has approved for disposal on a case basis in accordance with 10 CFR 61, Licensing Requirements for Land Disposal of Radioactive Waste.

Unknown waste. Waste for which there is no information regarding the generation process, hazardous constituents present, or other information.

Visual examination. (1) A WIPP-approved characterization process performed to visually examine the waste to ensure compliance with WIPP Waste Analysis Plan, WIPP CH-WAC, and CCP CH-TRAMPAC; (2) Constitutes performing a physical examination of the contents to identify and verify physical form, and the presence or absence of prohibited items; (3) Requires either: (a) the presence and signature approval of two individuals qualified as VEOs, or (b) an audio/video record accompanying the signature of one such qualified individual and one other individual, a VEE available for support.

Visual examination of newly generated waste. Activity for characterizing NGW at the point of generation using VE. This examination requires two OTs qualified in VE, with a VEE available for support. This includes VE NGW closure.

Visual examination of non-boxline legacy waste containers. An activity performed to examine and characterize the contents of a waste container for the purpose of confirming or supplementing AK data. This examination requires the presence and disposition concurrence of two individuals qualified as VEOs, and may be recorded on audio/video media. Waste containers that (1) have no AK data to support the characterization of the waste; (2) are identified as an *unknown waste*; (3) have been examined by RTR (yielding incomplete, inconclusive, or suspect data); or (4) any other waste container determined to be suitable for VE, may be characterized using this method.

Waste characterization. The characterization methods include AK and may also include, as necessary, headspace-gas sampling and analysis, radiography, VE, and homogeneous waste sampling and analysis.

Waste matrix code. A system of categorizing wastes with similar physical and chemical properties.

Waste stream. Waste materials that have common physical form, that contain similar hazardous constituents and that are generated from a single process or activity (Hazardous Waste Facility Permit, Attachment C).

Waste Tracking System. System comprised of positioned and hand-held barcode readers and an interactive database designed to track waste items and containers with their associated characterization data from point of retrieval to dispatch to WIPP.

6.0 REFERENCES

(1) 10 CFR 61, Licensing Requirements for Land Disposal of Radioactive Waste

(2) 40 CFR 191, Management and Disposal of Spent Nuclear Fuel, High-Level and Transuranic Radioactive Wastes

(3) 40 CFR 264.177, Special Requirements for Incompatible Wastes.

(4) 40 CFR 268.2, Land Disposal Restrictions, Definitions Applicable in this Part

(5) AMWTP HWMA/RCRA Permit

(6) Atomic Energy Act of 1954

(7) CCP-PO-003, CCP Transuranic Authorized Methods for Payload Control (CCP CH-TRAMPAC)

(8) DOE O 435.1, Radioactive Waste Management

(9) IDAPA 58.01.05.008, Standards for Owners and Operators of Hazardous Waste Treatment, Storage and Disposal Facilities

(10) Hazardous Waste Facility Permit, Attachment C

(11) INST-OI-24, Packaging Radioactive Waste

(12) INST-OI-34, Non-Facility Visual Examination Operations

(13) LST-LLW-04, LLW/MLLW Prohibited and Restricted Items List

(14) MP-COPS 9.17, Performing Pre-Job Briefings and Post-Job Reviews.

(15) MP-DOCS-18.2, Records Management

(16) MP-TRUW-8.1, Certification Plan for INL Transuranic Waste

(17) MP-TRUW-8.2, Quality Assurance Project Plan

(18) RPT-NFCS-09, Criticality Safety Analysis Involving the Use of Liquid Sorbents and Immobilizing Agents

(19) RPT-TRUW-05, Waste Matrix Code Reference Manual

7.0 RECORDS

Records generated by this procedure are classified in accordance with the table below and dispositioned in accordance with MP-DOCS-18.2, Records Management.

Record Description	Classification
INST-FOI-17 Case File	Non-permanent WIPP/ENV1-J-1/Destroy 75 years after submittal
Data Management System (WTS) records	Lifetime WIPP/ENV1-J-1/Turnover to CBFO at end of project

8.0 EXHIBITS

Exhibit 1 – Waste Material Parameter Descriptions

Exhibit 2 – Parameters and Weights of Commonly Identified Items

Exhibit 3 – Fill Factor

Exhibit 4 – List of TRU Prohibited Items

Exhibit 5 – Volume Conversions for Liquids in 55-gallon Drums

Exhibit 6 – Volumes of Cylinders

Exhibit 7 – Common Liquid Measurements and Conversions

Exhibit 8 – V^2 Nominal Density Guidance Table

Exhibit 9 – Volume Conversion Table, Cubic Inches to Pints

Exhibit 10 – Volume conversion for Partial 55-gal Drum (in pints)

Exhibit 11 – Visual Examination Equipment IDs

Exhibit 12 – Description of Liners

9.0 APPENDICES

Appendix A – Schematic of Criticality Control for Secondary Waste

Appendix B – Waste Incompatibility by Item Description Code

Appendix C – List of LLW/MLLW Prohibited and Restricted Items (taken from LST-LLW-04)

Appendix D – Revision Log

Exhibit 1 – Waste Material Parameter Descriptions

Waste Material Parameter	Help Description
Iron-based metals/alloys	Iron and steel alloys in the waste; does not include the waste container materials
Aluminum-based metals/alloys	Aluminum or aluminum-based alloys in the waste material
Other metals	All other metals found in the waste materials
Other inorganic materials	Nonmetallic inorganic waste, including concrete, glass, firebrick, ceramics, sand, and inorganic absorbents
Cellulosics	Materials generally derived from high polymer plant carbohydrates. Examples are paper, cardboard, wood, cloth, etc.
Rubber	Natural or man-made elastic latex materials. Examples are surgeons' gloves, leaded rubber gloves, etc.
Plastics (waste materials)	Generally man-made materials often derived from petroleum feedstock. Examples are polyethylene, polyvinyl chloride, etc.
Organic matrix	Cemented organic resins, solidified organic liquids, and sludge
Inorganic matrix	Any homogeneous materials consisting of sludge or aqueous-based liquids that are solidified with cement, calcium silicate, or other solidification agents. Examples are wastewater treatment sludge, cemented aqueous liquids, inorganic particulate, etc.
Soil/gravel	Generally consists of naturally-occurring soil/gravel contaminated with inorganic waste materials
Steel (packaging materials)	208-L (55-gal.) drums
Plastics (packaging materials)	90-mil polyethylene drum liner and plastic bags

Exhibit 2 – Parameters and Weights of Commonly Identified Items (EXAMPLE)**

Item	Weight	Waste Material Parameter
55-gal drum (17C)	See WTS List of Container Weights	Steel (Packaging materials)
90 mil liner (Type I, II, III, IV)	See WTS List of Liner Weights	Plastic (Packaging materials)
O-ring plastic bag found in sludge, organic setups, etc.	4 lb	Plastic (Packaging materials)
Drum plastic bag	1 lb	Plastic (Packaging materials)
Plastic bag for waste	1/4 lb	Plastic (Waste materials)
Cardboard liner (graphite mold waste)	4 lb	Cellulosics
Fiber pack	6 lb	Cellulosics
Box fiberboard liner	15 lb	Cellulosics
Box plastic liner	5 lb	Plastic (Packaging materials)
Lead Brick 2 by 4 by 8 in.	25 lb	Other metals
Leaded Rubber Glove	5.5 lb	Rubber
Leaded Rubber Apron	5.25 lb	Rubber
Liquids (Water)	8 lb/gal (1 lb/pint)*	
Drum Lead-liner: (1/8 in. thick, 28 in. high, by 72 in. long) (0.4 lb/in.^{3})	100 lb	Other metals
Drum Lead-liner: (1/16 in. thick, 28-in. high by 72-in. long)	50 lb	Other metals
Vermiculite (95 gm/liter)	0.9 lb/gal (0.125 lb/pint)	Other inorganics
Oil-Dri (404 gm/liter)	3.36 lb/gal (0.42 lb/pint)	Other inorganics
Poly Bottles (1 gal)	1 lb	Plastics (Waste materials)
Metal Can	½ lb	Iron-based metals/alloys
Drum Stub bag	2 lb	Plastic Packaging (materials)
Cured Cement	9 lb/gal (1.125 lb/pint)	Other Inorganic Materials
Uncured Cement	24 lb/gal (3 lb/pint)	Other Inorganic Materials
Aquaset	9.6 lb/gal (1.21 lb/pint)	Other Inorganic Materials

* Waste Parameter depends on source of liquid organic or inorganic.
**This is not a complete list.

Exhibit 3 – Fill Factor

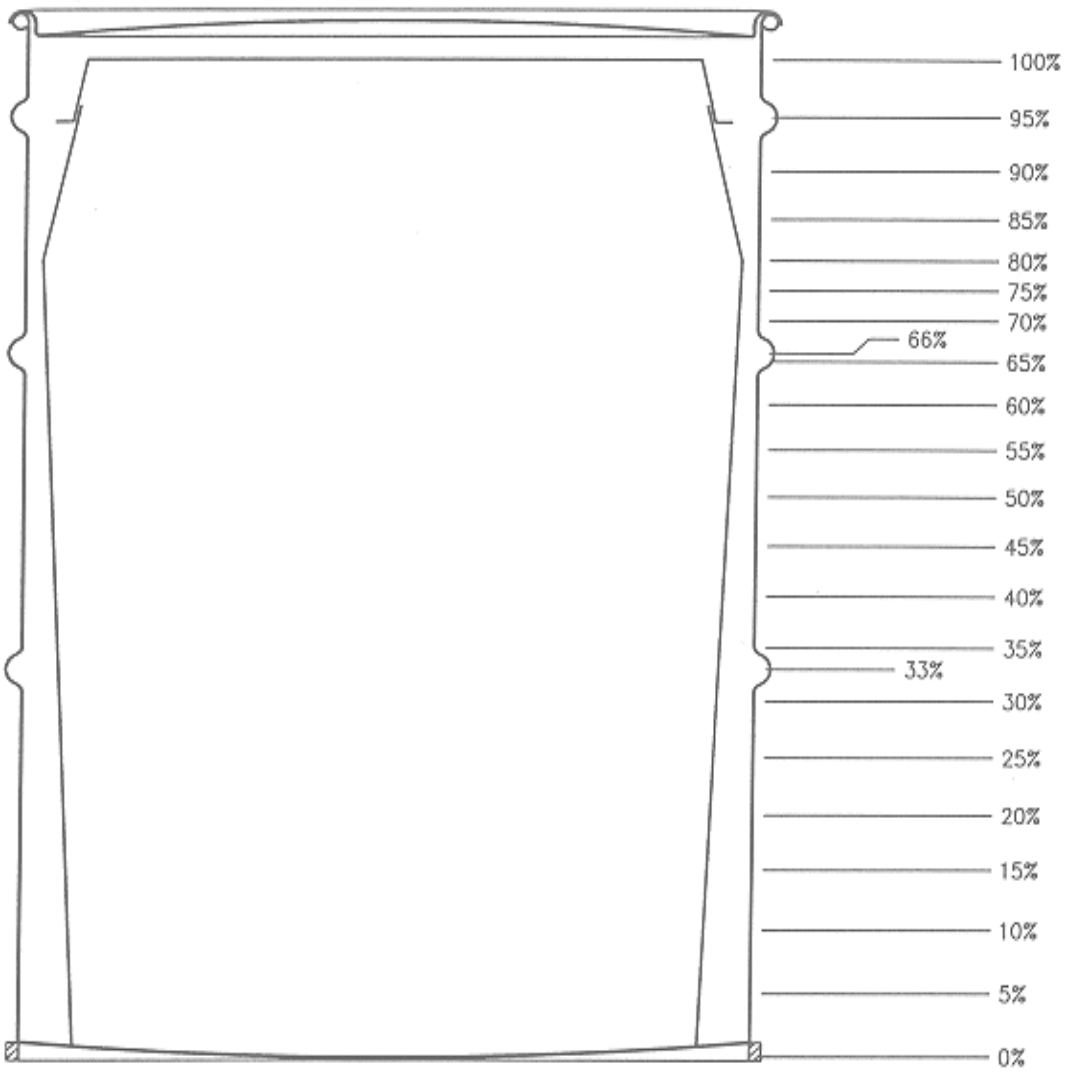

Percentage is to be based on all waste contents (including bags and absorbent) in the drum.

Exhibit 4 – List of TRU Prohibited Items

Prohibited Item	Comments
Liquids	Liquid waste is not acceptable at WIPP. Observable liquids containing PCBs are prohibited at WIPP. Liquid in the quantities delineated here is acceptable. Observable liquid shall be no more than 1 percent by volume of the outermost container at the time of radiography or visual examination (VE). Internal containers with more than 60 milliliters or 3 percent by volume observable liquid, whichever is greater, are prohibited. Containers with Hazardous Waste Number U134 assigned shall have no observable liquid. Overpacking the outermost container that was examined during radiography or visual examination or redistributing untreated liquid within the container shall not be used to meet the liquid volume limits.
Compressed Gases	Typically, aerosol cans, gas bottles or cylinders that cannot be verified to be physically vented (e.g., a drilled hole, a removed relief valve).
Corrosives/Reactives/ Ignitables Present	Waste exhibiting the characteristic of ignitability, corrosivity or reactivity.
Explosives	Examples include ammunition, dynamite, black powder, detonators, nitroglycerine, urea nitrate, picric acid.
Wastes with PCBs not authorized under an EPA PCB waste disposal authorization	Light ballasts and transformers are potential sources of PCBs in much of the waste. PCB items commingled (in direct contact with, or displaying evidence of cross-contamination) with other observable liquids are prohibited.
Non-radionuclide Pyrophoric Materials	Example of Pyrophoric radionuclides are: metallic plutonium, americium. Examples of non-radionuclide pyrophoric materials or materials/waste that may cause a pyrophoric type event are: organic peroxides, sodium metal, and chlorates.
Sealed Containers greater than 4 liters	Lids that are screwed into place or taped should be considered sealed. Lids that do not form an “air tight” seal do not need to be considered as a sealed container
Non-Mixed Hazardous Waste	Hazardous wastes not occurring as co-contaminants with TRU mixed wastes (non-mixed hazardous wastes).
Waste incompatible with backfill, seal and panel closure material, shipping container materials or other wastes	Excessive rust, brittle materials, excessive corrosion, evidence of reaction in the waste are all potential sources for evidence that the waste is not compatible with backfill, packaging, or shipping container.
Sharp or heavy items not blocked or braced	Sharp items that have a reasonable potential to puncture the payload container shall be treated or protected prior to shipment. (The presence of a properly assembled rigid or fiberboard liner is considered as one method of providing protection. Padding, when applicable is also an acceptable method of providing protection.) Heavy items shall be blocked, braced, or suitably packaged to provide puncture protection for the payload containers packaging these objects.

(HWMA/RCRA Permit; MP-TRUW-8.2; CCP-PO-003)

Exhibit 5 – Volume Conversions for Liquids in 55-gallon Drums

Volume Conversions for Liquid			
Inches	Gallons	Pints	Pounds
1.0	1.5	12	12
1.5	2.25	18	18
2.0	3.0	24	24
2.5	3.75	30	30
3.0	4.50	36	36
3.5	5.25	42	42
4.0	6.0	48	48
4.5	6.75	54	54
5.0	7.5	60	60
5.5	8.25	66	66
6.0	9.0	72	72
6.5	9.75	78	78
7.0	10.5	84	84
7.5	11.25	90	90
8.0	12.0	96	96
8.5	12.75	102	102
9.0	13.5	108	108
9.5	14.25	114	114
10.0	15.0	120	120

Exhibit 6 – Volumes of Cylinders

Volumes of Cylinders (pints)												
	Diameter (in.)											
Height (in.)	1	2	3	4	5	6	7	8	9	10	11	12
1	0.03	0.11	0.24	0.44	0.68	0.98	1.33	1.74	2.20	2.72	3.29	3.92
2	0.05	0.22	0.49	0.87	1.36	1.96	2.67	3.48	4.41	5.44	6.58	7.83
3	0.08	0.33	0.73	1.31	2.04	2.94	4.00	5.22	6.61	8.16	9.87	11.75
4	0.11	0.44	0.98	1.74	2.72	3.92	5.33	6.96	8.81	10.88	13.16	15.67
5	0.14	0.54	1.22	2.18	3.40	4.90	6.66	8.70	11.02	13.60	16.46	19.58
6	0.16	0.65	1.47	2.61	4.08	5.88	8.00	10.44	13.22	16.32	19.75	23.50
7	0.19	0.76	1.71	3.05	4.76	6.85	9.33	12.19	15.42	19.04	23.04	27.42
8	0.22	0.87	1.96	3.48	5.44	7.83	10.66	13.93	17.63	21.76	26.33	31.33
9	0.24	0.98	2.20	3.29	6.12	8.81	12.00	15.67	19.83	24.48	29.62	35.25
10	0.27	1.09	2.45	4.35	6.80	9.793	13.33	17.41	22.03	27.20	32.91	39.17
11	0.30	1.20	2.69	4.79	7.48	10.77	14.66	19.15	24.24	29.92	36.20	43.08
12	0.33	1.31	2.94	5.22	8.16	11.75	15.99	20.89	26.44	32.64	39.49	47.00
13	0.35	1.41	3.18	5.66	8.84	12.73	17.33	22.63	28.64	35.36	42.79	50.92
14	0.38	1.52	3.43	6.09	9.52	13.71	18.66	24.37	30.84	38.08	46.08	54.84
15	0.41	1.63	3.67	6.53	10.20	14.69	19.99	26.11	33.05	40.80	49.37	58.75

Exhibit 7 – Common Liquid Measurements and Conversions

Liquid Measurements	
1.	3 tsp = 1 tbsp
2.	4 tbsp = ¼ cup
3.	2 cups = 1 pint
4.	4 cups = 1 qt
5.	2 pints = 1 qt
6.	8 pints = 1 gal
7.	4 quarts = 1 gal
8.	Pints ×.0.473 = liters
9.	Milliliters × 1000 = liters
10.	1 pint = 1 lb

Conversions		
Unit	Conversions to Pints	Weight (lb)
1 teaspoon	0.01	0.01
1 tablespoon	0.03	0.03
1/4 cup	0.13	0.13
1/3 cup	0.17	0.17
1 cup	0.5	0.5
1 pint	1	1
1 quart	2	2
1 gal	8	8

Exhibit 8 – V^2 Nominal Density Guidance Table

Material	Density (kg/L)	References
Aluminum	3.0	1, 2
Cement	2.0	1
Cardboard (fiber board)	0.8	5
Copper	9.0	1, 2
Fiber board (insulating)	0.8	4
Fire Brick (90% aluminum oxide)	3.0	4
Glass	2.0	3
Glass, Bulk Density	2.0	3
Glass, Raschig Rings (0.06 kg/ring)	0.6	4
Graphite, Bulk Density	0.5	3
Gravel	2.0	3
Iron	7.5	2
Lead	11.0	1, 2
Plastic (e.g., 10 ml liner material)	0.9-1.0	Calculated
Plastic (e.g., 90 ml heavy rigid liner material)	0.9-1.0	Calculated
Rubber	0.9-2.0	2
Sand	2.0	3
Sludge	1.0-1.5	Common Knowledge
Soil	1.0-1.8	2
Stainless Steel	8.0	1
Steel	8.0	1, 2
Tantalum	17.0	2
Wood (fir, oak, pine, avg.)	1.0	3
Water	1.0	1.3

The actual density of specific metals or wood types may vary due to the type of wood or the composition of the metal alloy.
Water has a nominal density of 1kg/L
1 kilogram = 2.2 pounds

References

1. Shigley, J. E., Mechanical Engineering Design, 3rd ed. 636
2. Marks Standard Handbook for Mechanical Engineers, 8th ed. 6-60/61
3. Perry, John H., Chemical Engineers Handbook, 3rd ed. 1549-52
4. Harbison-Walker Refractories Co., Technical Bulletin 12, HU
5. Rocky Flats procedure, 4-I19-NDT-00569

Exhibit 9 – Volume Conversion Table, Cubic Inches to Pints

in^3	1	2	3	4	5	6	7	8	9	10	11	12	13	14	15	16	17	18	19	20	21	22
1	.04	.07	.10	.14	.17	.21	.24	.28	.31	.35	.38	.42	.45	.49	.52	.55	.59	.62	.66	.69	.73	.76
2	.07	.14	.21	.28	.35	.42	.49	.55	.62	.69	.76	.83	.9	.97	1.04	1.12	1.18	1.25	1.32	1.41.395	1.45	1.52
3	.1	.17	.31	.42	.52	.62	73	.83	.94	1.04	1.14	1.25	1.35	1.45	1.56	1.66	1.77	1.87	1.97	2.08	2.18	2.29
4	.14	.28	.42	.55	.69	.83	.97	1.12	1.25	1.39	1.52	1.66	1.8	1.94	2.08	2.22	2.36	2.49	2.63	2.77	2.91	3.05
5	.17	.35	.52	.69	.87	1.04	1.21	1.39	1.56	1.73	1.9	2.08	2.25	2.42	2.6	2.77	2.94	3.12	3.29	3.46	3.64	3.81
6	.21	.42	.62	.83	1.04	1.25	1.45	1.66	1.87	2.08	2.29	2.49	2.7	2.9	3.12	3.32	3.53	3.74	3.95	4.16	4.36	4.57
7	.24	.49	.73	.97	1.21	1.45	1.7	1.94	2.19	2.42	2.67	2.91	3.15	3.39	3.64	3.88	4.12	4.36	4.61	4.85	5.09	5.33
8	.28	.55	.83	1.11	1.39	1.66	1.94	2.22	2.49	2.77	3.05	3.32	3.61	3.88	4.16	4.43	4.71	4.99	5.26	5.54	5.82	6.1
9	.31	.62	.94	1.25	1.56	1.87	2.18	2.49	2.81	3.12	3.43	3.74	4.05	4.36	4.68	4.99	5.3	5.61	5.92	6.23	6.66	6.86
10	.35	.69	1.04	1.39	1.73	2.08	2.42	2.77	3.12	3.46	3.81	4.16	4.5	4.85	5.19	5.54	5.89	6.23	6.58	6.92	7.27	7.62
11	.38	.76	1.14	1.52	1.9	2.29	2.67	3.05	3.43	3.81	4.19	4.57	4.95	5.33	5.71	6.1	6.48	6.86	7.24	7.62	8	8.38
12	.42	.83	1.25	1.66	2.08	2.49	2.91	3.32	3.74	4.16	4.57	4.99	5.4	5.82	6.23	6.65	7.06	7.48	7.98	8.31	8.73	9.14
13	.45	.9	1.35	1.8	2.25	2.7	3.15	3.61	4.05	4.5	4.95	5.4	5.85	6.3	6.75	7.2	7.65	8.1	8.55	9	9.45	9.9
14	.49	.97	1.45	1.94	2.42	2.9	3.39	3.88	4.36	4.85	5.33	5.82	6.3	6.79	7.27	7.76	8.24	8.72	9.21	9.7	10.18	10.67
15	.52	1.04	1.56	2.08	2.6	3.12	3.64	4.16	4.68	5.19	5.71	6.23	6.75	7.27	7.79	8.31	8.83	9.35	9.87	10.39	10.91	11.43
16	.55	1.12	1.66	2.22	2.77	3.32	3.88	4.43	4.99	5.54	6.1	6.65	7.2	7.76	8.31	8.87	9.42	9.97	10.53	11.08	11.64	12.19
17	.59	1.18	1.77	2.36	2.94	3.53	4.12	4.71	5.3	5.89	6.48	7.06	7.65	8.24	8.83	9.42	10	10.6	11.18	11.77	12.36	12.95
18	.62	1.25	1.87	2.49	3.12	3.74	4.36	4.99	5.61	6.23	6.86	7.48	8.1	8.72	9.35	9.97	10.6	11.22	11.84	12.47	13.09	13.71
19	.66	1.32	1.97	2.63	3.29	3.95	4.61	5.26	5.92	6.58	7.24	7.9	8.55	9.21	9.87	10.53	11.18	11.84	12.5	13.16	13.82	14.48
20	.69	1.39	2.08	2.77	3.46	4.16	4.85	5.54	6.23	6.92	7.62	8.31	9	9.7	10.39	11.08	11.77	12.47	13.16	13.85	14.55	15.24
21	.73	1.45	2.18	2.91	3.64	4.36	5.09	5.82	6.55	7.27	8	8.73	9.45	10.18	10.91	11.64	12.36	13.09	13.82	14.55	15.27	16
22	.76	1.52	2.29	3.05	3.81	4.57	5.33	6.1	6.86	7.62	8.38	9.14	9.9	10.67	11.43	12.19	12.95	13.71	14.48	15.24	16	16.76

Multiply the cross-section volume in the table by the height of the object to get the volume of the object in pints. The cross-section volume is based on a height of 1 inch.

Exhibit 10 – Volume Conversion for Partial 55-Gallon Drum (in pints)

Volume	1/8	1/4	1/3	½	2/3	3/4
1st chime	18	36	48	73	97	109
2nd chime	37	74	97	147	198	221
Full drum	55	110	145	220	295	330

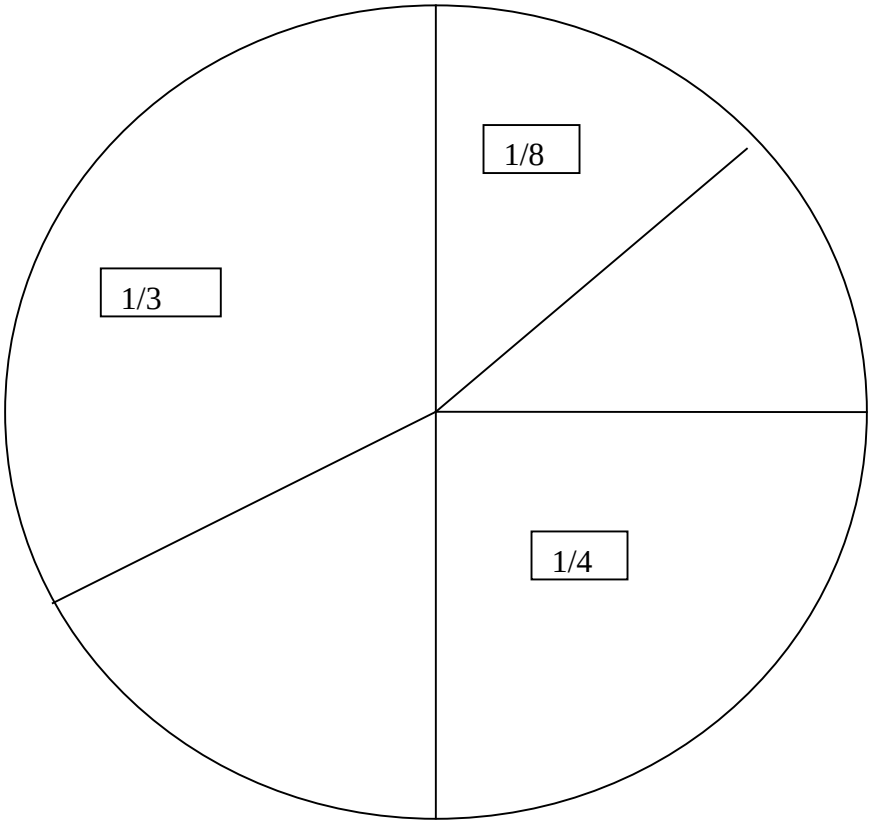

Exhibit 11 – Visual Examination Equipment IDs

WIPP #	Site Equipment #	Procedure Number Method Equipment Description	Components	Software
9VE2	Z-250-VEC	Procedure – INST-OI-34, Non-Facility Visual Examination Operations Method – BN-VE2 Description –Visual Examination of Legacy Waste Containers (VEC)	N/A. (Method described in procedure INST-OI-34).	Waste Tracking System (WTS)
9VE3	Z-250-VNC	Procedure – INST-OI-34 Method – BN-VE3 Description – Newly Generated Waste Visual Examination Closure (VNC)	N/A. (Method described in procedure INST-OI-34).	Waste Tracking System (WTS)
9VE6	FAC - VNC	Procedure – INST-FOI-17 Method – BN-VE6 Description – Newly Generated Waste Visual Examination Closure (VNC)	N/A. (Method described in procedure INST-FOI-17).	Waste Tracking System (WTS)
9VE7	VE BID RPCK	Procedure – INST-FOI-17 Method – BN-VE7 Description – Visual Examination of Boxline Legacy Waste (VEB) – Box to a drum repackaging	N/A. (Method described in procedure INST-FOI-17).	Waste Tracking System (WTS)
9VE8	VE DID RPCK	Procedure – INST-FOI-17 Method – BN-VE8 Description – Visual Examination of Legacy Waste (VEB) – Drum to a new drum repackaging	N/A. (Method described in procedure INST-FOI-17).	Waste Tracking System (WTS)

Exhibit 12 – Description of Liners

Liner Type	Description
I	Straight wall liner with a rolled lip to the inside
II	Tapered shoulder liner with a slip fit cap, closure sealed with metal band
III	Tapered shoulder liner with a metal bolt closure ring
IV	Straight wall liner with a slip fit lid
Plastic	Plastic liner approximately 35 mil in thickness
Other	Any other type of liner type that is not identified above

Appendix A – Schematic of Criticality Control for Secondary Waste

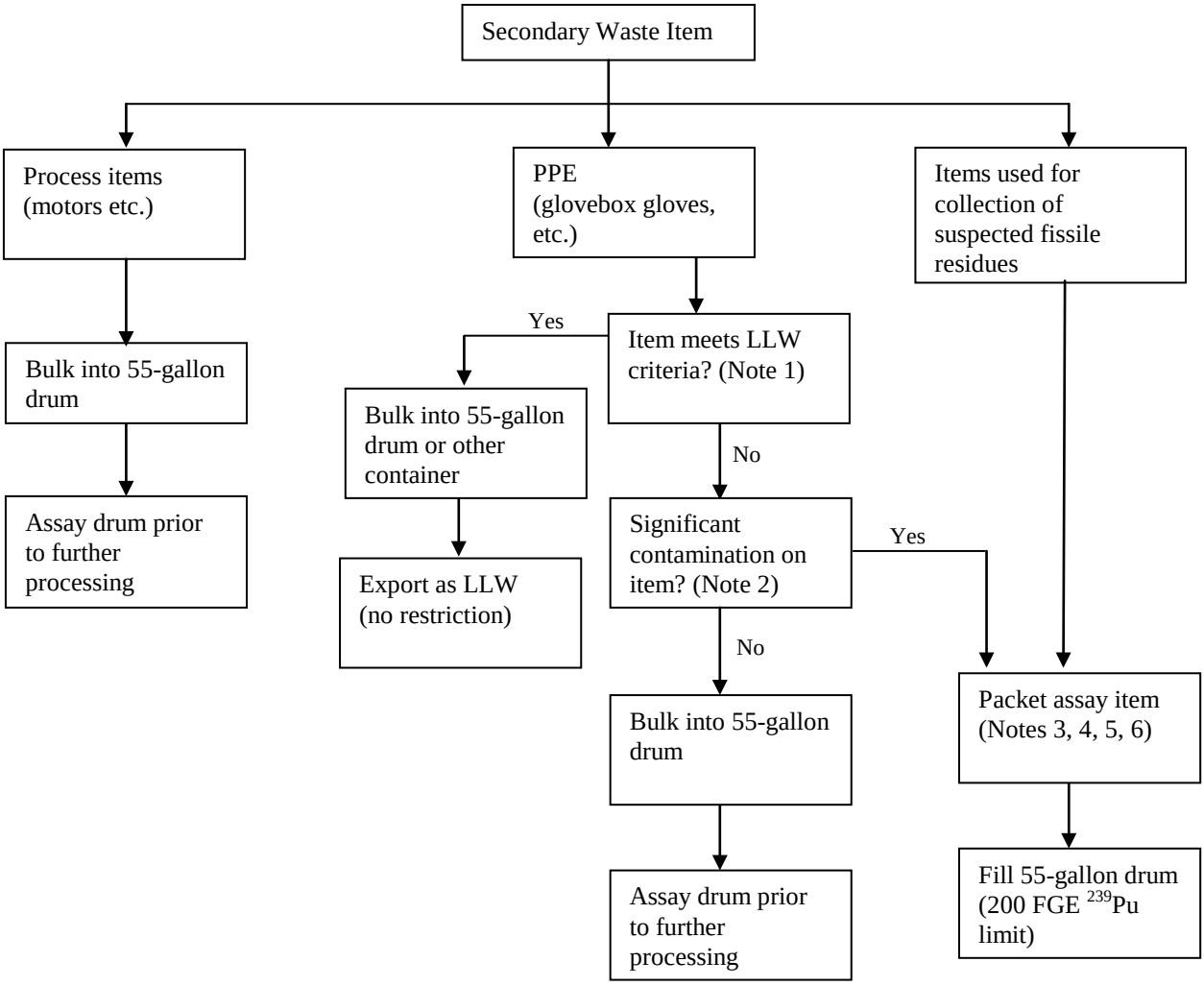

Notes:

1. Via smearing, hand-held instruments or other methods.
2. Visible contamination.
3. Packet assay systems shall be performance verified not less than once per day when being used.
4. The total error associated with the packet assay result shall be doubled and added to the measured FGE ^{239} Pu.
5. The validity of the packet assay system calibration shall be periodically verified in accordance with the manufacturer's guidelines.
6. Metal items cannot be packet-assayed (the special case waste is the exception).

Appendix B –
Waste Incompatibility by Item Description Code

Incompatible waste includes the following groups:

Waste Type	General Waste Description	
Acids	ID-150:	Laboratory Waste
	MD-805:	Asbestos Filters
	MD-813:	Glass Filters and Fiberglass
	MD-834:	High Level Acid
	RF-335:	Absolute 8 x 8 Filters (Treatment Only)
	RF-338:	Insulation and CWS Filter Media (Treatment Only)
	RF-241:	Americium Process Residue
Oxidizers	ID-005:	Evaporator Salts Retrieved RF
	AE-100:	General Plant Waste
	MD-805:	Asbestos Filters
	MD-811:	Evaporator and Dissolver Sludge
	MD-813:	Glass Filters and Fiberglass
	MD-834:	High Level Acid
	RF-005:	Evaporated Salts
	RF-241:	Americium Process Residue
	RF-430:	Resin, Ion Column-Unleached
	RF-745:	Pits 11 & 12 Evaporator Salts
	SD-703:	Inorganic Sludge
Caustics	MD-835:	High Level Caustic

Waste Type	General Waste Description
Halogenated Organics	RF-003: Organic Setups, Oil Solids RF-700: OASIS Waste RF-801: Solidified Organics BN-501: AMWTP PCB Soil BN-511: PCB Organic Homogeneous Solids [Treatment Only] BN-514: Absorbed Organic Squeezants [Treatment Only] BN-518: TRU Supercompactor Squeezants BN-526: Sample Returns BN-528: TRU PCB Liquids Generated During Retrieval BN-603: Absorbed Analytical Liquids BN-605: Absorbed Liquids TSCA/PCB [Treatment Only] RF-743: Pits 11 & 12 Organic Setups RF-746: Pits 11 & 12 Pad Oil Drums SD-704: Organic Sludge SD-705: Debris SD-706: Soil UN-00A: Undefined homogeneous solids
Unknowns	PC-000: "True" or post-RTR unknown
Pyrophoric Materials	RF-751: Roaster Oxide RF-999: Potential Roaster Oxide
Heterogeneous Debris	RF-998: Heterogeneous Debris
Heterogeneous Debris	IW-179: Early Waste Retrieval Heterogeneous Debris

(HWMA/RCRA Permit)

Separation or physical segregation requirements consist of the following:

1. Containers of acids with 5 gal or more of liquids must be separated or physically segregated from caustics, and containers of acids with any liquids must be separated or physically segregated from halogenated organics.

2. Containers of caustics with 5 gal or more of liquids must be separated or physically segregated from acids, and containers of caustics with any liquids must be separated or physically segregated from halogenated organics.
3. Containers of oxidizers with any liquids must be separated or physically segregated from halogenated organics.
4. Containers of halogenated organics with any liquids must be separated or physically segregated from acids or oxidizers, and caustics.
5. Containers with unknown waste must be separated by physical distance.

A container holding mixed waste that is incompatible with any waste or any material stored nearby shall be segregated (separated by berm, dike, or wall).

(HWMA/RCRA Permit)

Appendix C –
List of LLW/MLLW Prohibited and Restricted Items
(taken from LST-LLW-04)

Prohibited/Restricted Item	Additional Information/Examples
Prohibited/Restricted Item	**Additional Information/Examples**
Aerosol Cans	Description should specify evidence of puncture or venting and a volume estimate of liquid if present.
Animal Carcasses	Describe type and amount.
Asbestos	Items which may contain asbestos (floor tiles, insulation, etc.) Describe type and amount.
Batteries	Describe type such as D-Cell, C-Cell, Wet Cell (Lead-Acid), etc. and amount. If liquids are present, identify and quantify.
Beryllium*	Identify and describe. Provide form and amount by mass.
Chelating agents*	Describe type such as EDTA and amount.
Classified waste*	Describe type and amount.
Compressed Gases	Describe type such as pressurized manifold component or other sealed vessel and amount. Includes pressurized gases and gas cylinders. Besides typical gas cylinder items to consider, include propane gas, butane gas, BIC lighter, etc. Includes fire extinguishers, describe size, content, and amount. Identify if vented.
Compressors/Refrigerator Systems	Identify and describe.
D001-Ignitable, D002- Corrosive, D003--Reactive*	Identify applicable code(s).
Etiological Agents*	Identify type and amount. Also includes other - biological, pathogenic, infectious materials.
Explosives	Describe suspect items such as ammunition, dynamite, etc., and amount.
Fire extinguishers	Describe size, content, and amount.
Graphite	Form and amount by mass.
Impenetrable Objects	Unable to completely identify and verify contents. Identify % by volume impenetrable.

Prohibited/Restricted Item	Additional Information/Examples
Lab Packs	Lab packs are small containers of liquid or solid chemicals placed into a larger container surrounded by absorbent. Describe if chemicals are present and if they are liquids or solids.
Lead	If present, is it elemental? Provide general dimensions, description, and quantity of lead by mass.
Liquids	Describe if liquid is free or containerized, viscosity description, and volume of liquid. Determine if the volume of liquid exceeds 1% (>1%) or 5% (>5%) of the waste container volume.
Mercury	Describe (contained – thermometers, switches, uncontained, etc.) Provide volume, identify if it is elemental. Identify if absorbed.
Particulates*	Describe type, amount, and if material is containerized.
PCBs	Describe size and type of item such as ballast, capacitor, or transformer. Identify if solid or liquid. If liquid is present, provide a volume estimate of liquid.
Pyrophoric waste*	Describe type such as metal hydrides, metal powders, etc., and amount.
Sharps	Describe type such as needles, razors, knives, heavy bulky metal, etc.
Sealed Sources	Identify and describe.
Solid Uranium/Thorium*	Identify, describe, provide mass.

*The presence of these items in the waste container may not be evident during RTR or VE. The presence or absence of these items in each container is determined by application of AK/process knowledge or other methods during waste verification.

Appendix D – Revision Log

Revision Number	Date Approved	Pages Affected	Description of Revision
0	3/30/04	All	DCR-2814, Initial issue.
1	8/16/04	All	DCR-3244.Change Effective Date from "Pending DOE Approval of Treatment Facility Operations Startup" to 8/16/04.
2	08/26/04	All	DCR-3169. Added Section 4.11, NCR handling into procedure. Editorial changes. Combined Miscertification VE and VE in lieu of RTR. Made changes to allow for integration of production and facility VE forms. Section 4.24: add: "leather palm-lined" Kevlar gloves…" Incorporate WIPP Comments. Minor editorial corrections.
3	12/20/04	All All All Various	DCR-3317. Incorporate WIPP Comments from Revision 2. Incorporate WIPP Comment Resolutions from Revision 3. Incorporate Internal Review comments from 3B. Incorporate Minor Comments from CBFO from 3C.
4	03/9/05	P14 and P17 P17	DCR-4189. Add NOTES to resolve CAR 12731 (CBFO Audit A-05-08) Incorporate WIPP comments from 4A.
5	03/31/05	Various	DCR-4239. Revise step 4.3.21 to correct Table numbers. Update Exhibit 5, 1st row, 2nd column, Add two new steps (4.3.28, 4.5.8, Revise step 4.6.45, Revise **NOTE** 1 on Page 40 of 70.
6	04/21/05	Various	DCR-4245. Delete duplicate precautions and limitations and add text to NOTES as appropriate.

Revision Number	Date Approved	Pages Affected	Description of Revision
7	6/28/05	Various	DCR-4313. Incorporated changes in WTS and the use of new Equipment IDs. Incorporated Blue Sheet requirements for Contract Transition. Incorporate FC-1. Incorporate CBFO Comment Resolution
7 FC-1	9/1/05	Various	DCR-4622. Updated document to reflect changes made to RPT-TRUW-05
7 FC-2	TBD	Various	DCR-4582. Deletion of Appendix C and references to Appendix C. Add new references to DVD Recorder PRV-LX-1 and Sony Video Cassette Recorder Operating Instructions.
8	1/17/06	Various	DCR-4622. Incorporate FC-1 (DCR-4529) and FC-2 (DCR-4582). Incorporate WTS changes for handling of PCBS, clarification, including sequence of events into procedure. Update document to current formatting standards of MP-DOCS-18.1. Resolve review comments. Apply consistency with OI-34, as appropriate.
9	2/14/06	Various	DCR-4792. Add an off normal condition section to address the handling of damaged containers. Correct verbiage to allow the handing of drums with no liner.
10	3/30/06	All	DCR-4921. Made formatting corrections to resolve CAR-21421.
10FC-1	5/1/06	Pg. 9	DCR-5017. Drums come into Facility under disposition of Facility accept after RTR.
10FC-2	08/10/06	Various	DCR-5156. Container repackaging changes.
11	08/30/06	Various	DCR-5266. Correct header and incorporate FCs-1, -2. Edit to change ES&H to ESS&H.
11FC-1	9/13/06	Pg 33	DCR-5336. Correct Step 4.2.5.4.

AMWTP FACILITY OPERATIONS INSTRUCTION		
INST-FOI-17, Rev. 27	Issued: 09/03/13	Effective: 09/04/13
Facility Visual Examination Operations		

Revision Number	Date Approved	Pages Affected	Description of Revision
11FC-2	10/24/06	Pg 88	DCR-5494. Updated Exhibit 5, List of Prohibited items.
11FC-3	10/24/06	Pg 88	DCR-5502. Revised “compressed gasses” row.
12	12/11/06	Various	DCR-5377. Incorporate FC-1, 2, 3 Added steps for NTS WAC Criteria, Steps for ISMS implementation and update Exhibit 4 for consistency with RPT-TRUW-05.
13	01/23/07	All	DCR-5649. Document rewrite to reorganize approach to standards-based, requirements-based instruction. Incorporate changes to implement 311 permit modification requirements. (Exhibit 5 corrected to be Exhibit 4).
13FC-1	1/25/07	8	DCR 5709. Delete 3.2.5 and renumber 3.2.6 to 3.2.5.
13FC-2	1/29/07	35	DCR-5725. Delete STL/VEE. Change Ensure to Verify. Add step 4.6.19.1. If the disposition or Process code is not correct, **THEN** request the STL or VEE to correct the Task list accordingly.
14	07/02/07	Various	DCR-5755. Incorporate field changes.
14 FC-1	10/17/07	Various	DCR-6509. Update steps to reflect current process.
14 FC-2	12/19/07	Various	DCR-6657. Clarify requirements for remediation of liquids. WAP clarification. Deleting Note 2.
14 FC-3	1/3/08	Pg 61 Exhibit 4	DCR-6681. Clarified Exhibit 4 Liquids comments to be consistent with INST-OI-12.
15	04/08/08	Various	DCR-6564. Incorporated DCRs-6509, 6657, and 6681 to make field changes permanent. Replaced MP-TRUW-8.3 with CCP-PO-003.
15 FC-1	04/10/08	36	DCR-7003. Change to steps 4.6.1 through 4.6.4 for ICS Mimic Screen.

Revision Number	Date Approved	Pages Affected	Description of Revision
15 FC-2	06/05/08	Step 4.11.2.4	DCR-7219. Add "**AND** ensure all container barcode ID numbers are the same." CAR-38637.
15 FC 3	08/13/08	15, 49, 52, iv	DCR-7448. Implement WAP changes for Limited Visual Examination.
16	10/24/08	Various	DCR-7019. Complete document rewrite to update for scope of activity, Roles and Responsibilities, WTS instructions, references and streamline in accordance with VE Task Analysis, including removing Sec. 4.8, edited per MP-DOCS-18.1.
16 FC-1	11/12/08	30, 70	DCR-7739. Add new step to Sec. 4.7 (RTR/VE update), Note, and step in Sec. 4.2 to support WTS changes SCR # 3297.
16 FC-2	11/18/08	7, 58, 67, 69, 79	DCR-7785. Clarify steps for proper flow and WTS changes.
16 FC-3	11/25/08	5	DCR-7794. Delete Step 3.2.4.
16 FC-4	12/04/08	Various	DCR-7820. Correct steps for new General Waste Equipment ID. Add step to verify VE date clarify step for remediation for treating liquids.
16 FC-5	1/7/09	79, D4	DCR-7836. Change document to line up with WTS enhancements.
17	1/21/09	Various	DCR-7908. Incorporated DCRs-7785, 7794, 7820, and 7836 to make field changes permanent.
17 FC-1	2/05/09	B1	DCR-7996. Rolldown of requirements for chemical compatibility AI #38606.
17 FC-2	8/31/09	Pg 68	DCR-8545. Change "repack" to "RTR/VE update".
18	11/03/09	Various	DCR-8673. Incorporated FC DCRs 7996 and 8545. Added new note to Section 4.7, new Step 4.7.5 and moved Step 4.7.8 before existing Step 4.7.7. Made changes to Section 4.9.

Revision Number	Date Approved	Pages Affected	Description of Revision
19	06/10/10	Various	DCR-9220. Made changes for establishing consistency and implementing current WIPP Permit modifications.
20	12/17/10	Various	DCR-9583. Incorporated the WIPP Renewal Request and Waste Acceptance Criteria changes.
21	02/03/11	Pg B1	DCR-9776. Added additional IDCs to Appendix B.
22	03/09/11	3.2.8	DCR-9956. Removed word "previously" as part of annual TSR update to SAC 5.2.7.
22 FC-1	03/17/11	Various	DCR-9981. Delete F8 function form certain sections.
22 FC-2	03/16/11	All	DCR-9989. Removed Controlled Activity designator.
23	08/29/11	Various	DCR-10094. Incorporate FC-1 and FC-2 (DCRs-9989, 9981). Deleted IDC RF-095 from Unknowns to provide consistency with RPT-ESH-014.
24	12/29/11	Various	DCR-10383. Added prohibited/restricted items of concern for the LLW/MLLW program. Incorporated ITG-Bluesheet-013.
25	07/11/12	Entire	DCR-11020. Entire document rewrite to remove material that does not pertain or is not applicable to INST-FOI-17, remove screen shots, to allow better flow and performance of the document and in accordance with Conduct of Operations.
26	04/16/13	Various	DCR-12042. Incorporated changes to allow for mercury absorption.
26 FC-1	4/25/13	Pg 35	DCR-12316. Changed section 4.6 to align with WTS responses.
27	09/03/13	Pg 35	DCR-12699. Incorporate FC DCR-12316, to make FC permanent.

AMWTP Advanced Mixed Waste Treatment Project

DOCUMENT CHANGE REQUEST (DCR)

Form-1001
Rev. 35
Effective: 02/07/14

Implementing Document: MP-DOCS-18.4

Document ID:	INST-FOI-20	Current Rev. ID (Enter "NEW" if Creating):	42	DCR No.:	13405

1. Document Title: Supercompactor and Post-Compaction Operations

2. Requester: Mark Henderson **Phone:** 6385 **S #:** 100174

3. Type of Action:
☐ Create ☐ Revise ☒ Field Change ☐ Supersede ☐ Suspend ☐ Cancel ☐ Reinstate ☐ USQ Only

4. Proposed Change: ☐ Additional changes are listed on continuation page.

Item	Page No./ Section / Step	Description	Justification *Justification must be included for all listed changes.*
1	Appendix E, table	add note to read NOTE 1: Beryllium labels are determined by ~~TFTM~~ for offsite waste.	cannot put Be labels on offsite waste product drums.
		TFM MH 4/24/14	

☐ **Editorial corrections have been made per approved writing guides and for editorial consistency.**

NOTE: *If signature concurrence for any portion of the DCR is received via e-mail, check "E" on the signature line.*

5. Field Change: ☐ N/A (If the proposed change is NOT an FC, mark N/A and leave the remainder of Block 5 blank.)
NOTE: *If a proposed FC necessitates a WTS software change, the change must be stopped and a revision initiated.*

ACMM or ACLP Documents only: ☐ Temporary Duration/expiration date: _____
Refer to instructions in MP-DOCS-18.4, Document Control, for processing FCs **AND** complete Blocks 7, 15a or 15b, and 19.

Criticality Safety Approval: Julie Gregg (Print) _____ (Signature) ☒ E 4/24/2014 (Date)

NFM Approval: B. Warner (Print) _____ (Signature) ☐ E 04/24/14 (Date)

Plant Manager Acknowledgement: CEC (Initials)

6. Minor Change? ☐ Yes ☒ No

7. Document Owner Proposal Approval: ☒ Accepted ☐ Rejected

If rejected, indicate the reason below. Use Block 18 if additional space is needed.
N/A (Print) N/A (Signature) ☐ E N/A (Date)

Reason for Rejection: N/A

Is an FMP being processed that relates to the proposed change? ☐ Yes ☒ No If Yes, list FMP # N/A.
If this change must coincide with a software or PVCS change, provide SDCR or SCR # N/A and anticipated implementation date: N/A.
Complete Block 15a for the USQ process applicability review before submitting to Document Services or proceeding with DCR.

Rob Hamilton/Brett Stacey (Document Owner) _____ (Signature) ☐ E 4/23/14 (Date)

8. Does this action qualify as a **Periodic Review?** ☐ Yes ☒ No | If **YES** or if document is **NEW**, provide next periodic review due date: | N/A

Document ID:	INST-FOI-20	Current Rev. ID (Enter "NEW" if Creating):	42	DCR No.:	13405

9. Required Reviewers: (Determined by Document Owner in accordance with MP-DOCS-18.4, Appendix A.)

☒ N/A (If the proposed action is a minor change, FC, or USQ Only, mark N/A and leave the remainder of Block 9 blank.)

Discipline	Printed Name	Signature or Method of Concurrence (mark E for e-mail)		Date	Comments Yes	Comments No
			☐ E			
			☐ E			
			☐ E			
			☐ E			
			☐ E			
			☐ E			
			☐ E			
			☐ E			
			☐ E			
			☐ E			

10a. WIPP-Related Documents:

a. Is document NEW? ☐ Yes ☒ No

b. If this document is **NEW**, should it be added to LST-Q&SI-01, WIPP Procedure List? ☐ Yes ☐ No ☒ N/A

c. If this document is **NOT NEW**, is it currently listed in LST-Q&SI-01? ☒ Yes ☐ No ☐ N/A

d. If this is a form, is the implementing document listed in LST-Q&SI-01? ☐ Yes ☒ No

e. If listed in LST-Q&SI-01, or if it is a form with an implementing document listed in LST-Q&SI-01 (see Item "b" above), do these changes require CBFO review? ☐ Yes ☒ No

SPM Approval: Eric Schmieder ☐ E 4/24/14
Printed Name | Signature (indicating review and approval) | Date

10b. NNSS-Related Documents: ☐ N/A (N/A is allowable only if the action is a minor change or USQ Only; mark N/A and leave the remainder of Block 10b blank.)

a. Is document NEW? ☐ Yes ☒ No

b. If this document is **NEW**, should it be added to LST-LLW-03, NNSS Procedure Review List? ☐ Yes ☐ No ☒ N/A

c. If this document is **NOT NEW**, is it currently listed in LST-LLW-03? ☒ Yes ☐ No ☐ N/A

d. If this is a form, is the implementing document listed in LST-LLW-03? ☐ Yes ☒ No

e. If listed in LST-LLW-03, or if it is a form implemented by a document listed in LST-LLW-03 (see Item "b" above), do these changes require NNSS WCO review? ☒ Yes ☐ No

NNSS WCO Approval: Jason R Blair Mercer ☐ E 4/25/14
Printed Name | Signature (indicating review and approval) | Date

10c. PAIT-Related Documents: ☐ N/A (N/A is allowable only if the action is a minor change, USQ Only, or an administrative procedure change; mark N/A and leave the remainder of Block 10c blank.)

a. Is document NEW? ☐ Yes ☒ No

b. If this document is **NEW**, should it be added to LST-PAIT-01, WTS/PVCS Affected Procedures and Forms? ☐ Yes ☒ No

c. If this document is **NOT NEW**, is it currently listed in LST-PAIT-01? ☒ Yes ☐ No

PAIT Approval: Jerry P Hanson ☐ E 4/24/14
Printed Name | Signature (indicating review and approval) | Date

Document ID:	INST-FOI-20	Current Rev. ID (Enter "NEW" if Creating):	42	DCR No.:	13405

11. **Validation:** ☒ N/A (N/A is allowable only if the action is a minor change, canceling, superseding, USQ Only, or FC; mark N/A and leave the remainder of Block 11 blank.)

Is this an INST? ☐ Yes ☐ No

Is this a Form/Checklist used in conjunction with a revised INST? ☐ Yes ☐ No

Is this a Form/Checklist that independently direct work? ☐ Yes ☐ No

If any of the above are Yes, indicate procedure validation method and attach Form-1002, Procedure Validation Request:

☐ Limited Field Use ☐ Mockup ☐ Tabletop ☐ Walkdown (ACL/MIs Only)

Was the validation listed above a ☐ Complete validation or a ☐ Partial validation?

12. **RCRA:** ☒ N/A (Allowable only if the action is a minor change, USQ Only, or field change; mark N/A and leave the remainder of Block 12 blank.)

Are there any regulatory/permit impacts? ☐ Yes ☐ No

Evaluator Printed Name	Signature	☐ E	Date

13. **Training Requirements Determination:** ☒ (If proposed action is a field change or USQ Only, mark N/A and leave the remainder of Block 13 blank.)

Document owner initials are required, indicating approval of the option selected below.

_____ 1. ☐ This is a minor change. Training Department review not required.

_____ 2. ☐ This change affects informational and non-implementing documents (i.e., RPT, PLN, etc.). The document owner will ensure that any operating and training requirements will be flowed down to implementing procedures. Training Department review not required.

_____ 3. ☐ This change to an implementing document <u>does not</u> introduce or change technical content that will require personnel to acquire new knowledge or to develop new skills to implement the change. Qualification packages, training objectives, or examination questions do not need to be changed.

_____ 4. ☐ This change to an implementing document <u>does</u> introduce or change technical content that will require personnel to acquire new knowledge, complete new training requirements, or develop new skills to implement the change. Qualification packages, training objectives, or examination questions will need to be changed.
Enter TrackWise AI number_____

If Box 4 is checked, is training needed before this document is issued? ☐ Yes ☐ No

Signature Required only for Blocks 3 – 4:

☒ N/A (if Blocks 1 or 2 are checked, signature below not required.)

Training:

Printed Name	Signature	☐ E	Date

14. **Hazard Assessment:** ☒ N/A (N/A is allowable only if the proposed action or administratively exempt activity defined in INST-COPS-9.18.4, Hazard Assessment, is a minor change, FC, incorporating an approved FC, USQ Only, canceling, superseding, or an administrative procedure change; mark N/A and leave the remainder of Block 14 blank.)

Mark the correct statement

_____ The current hazard assessment is adequate for the proposed change(s).

_____ The hazard assessment has been revised to provide hazard mitigation measures, <u>and</u> the proposed change(s) identify hazards and mitigation measures in accordance with INST-COPS-9.18.4, Hazard Assessment.

Hazard Assessment number:_____

Responsible Manager:

Printed Name	Signature	☐ E	Date
R L HAMILTON			4/23/14

Document ID:	INST-FOI-20	Current Rev. ID (Enter "NEW" if Creating):	42	DCR No.:	13405

15a. **USQ Process Applicability Review:** To be completed, signed and dated by the Document Owner.

☐ **USQ NOT Required**. The proposed change applies to a document series or document type listed in LST-NSPC-02, Document Series and Types Exempted from the USQ Process.

(If marked, the change does NOT require a USQ evaluation: Mark N/A in Block 15b.)

☒ **USQ Required**. The proposed change does NOT apply to a document or document type listed in LST-NSPC-02.

(If marked, the change DOES require a USQ evaluation. See Block 15b.)

R Hamilton — Document Owner | [signature] — Signature | ☐ E | 4/23/14 — Date

15b. **USQ Evaluation:** To be completed by Document Owner or a USQ evaluator in accordance with MP-NSPC-3.2, Unreviewed Safety Question Process.

(Check only one box that applies.)

☐ N/A - document does NOT require USQ evaluation.

☐ A USQ **DOES NOT EXIST** based upon the results of a Categorical Exclusion Review.

Categorical Exclusion Review Number: _____ ☒ N/A

☒ A USQ **DOES NOT EXIST** based upon the results of an approved USQ Determination.

USQ Determination Number: 85429 ☐ N/A

☐ A USQ **EXISTS** based upon the results of an approved USQ determination.

NOTE: The proposed change to this document cannot be issued as long as a USQ exists.

Approval:

Print Name: B Warner

Signature: _____ **OR** ☒ Signature via Trackwise Notification 4/24/14 — Date

16. **Effective Date** and **Time**: After considering all impacts and implementation activities noted in Block 13, establish an effective date and time for the document: (If time is left blank, default time is 12:01 am.)

4/24/14 / 1600 — **Date** **Time**

If the document is a TOI, establish an expiration date, as follows: ☒ N/A

New Facility/Process Mock-up Development - not to exceed 45 days.

If an extension is needed (up to 45 days), the following have approved:

/ — **Date** **Time**

	Printed Name	Signature		Date
Plant Mgr:			☐ E	
NFM:	N/A		☐ E	
PSM:			☐ E	

17. **Other Documents** and related forms affected by this action: ☒ None

18. Comments: ☒ None

Document ID:	INST-FOI-20	Current Rev. ID (Enter "NEW" if Creating):	42	DCR No.:	13405

19. Final Approval:

Is a Required Read needed? ☐ Yes ☒ No If Yes, is it needed BEFORE this document is issued? ☐ Yes ☐ No

If needed before, initial indicating that an IMMEDIATE READ has been initiated per MP-COPS-9.12, Required Reading:

If not needed before, initial indicating that a regular required read has been initiated per MP-COPS-9.12.

Is a Tailgate Briefing needed? ☐ Yes ☒ No If Yes, comply with MP-RTQP-14.11, Delivery of Training.

Is the training required **BEFORE** this revision is implemented? ☐ Yes ☒ No If YES, provide TrackWise AI#: N/A

Does this document action require DOE-ID review and approval? ☐ Yes ☒ No (Refer to MP-DOCS-18.4, Appendix C.)

If document is NEW, complete Block 21 to indicate appropriate controlled hard copy distribution.

Final document approval and signature indicates correct reviewers have been involved, the validation completed (if required), no pending USQ or RCRA actions exist, and confirms acknowledgement, verification, and accountability for ensuring that CBFO approval has been received prior to issuing this document, if required in Block 10.

Document Owner: Brett Stacey (Printed Name) B Stacey (Signature) ☐ E 04/24/14 (Date)

20. **Document released** and controlled copies have been transmitted for use. **New Revision ID:** 42 FC-1

Name: DeLisa Blattner Signature: DeLisa Blattner Date: 4-24-14

21. ***Controlled Hard Copy Distribution*** *(If distribution is the same as the previous revision, enter "Same as Previous")*

Controlled Copy Location	Controlled Copy Location	Controlled Copy Location	Controlled Copy Location
	Same As Previous		

Delete/discard next page if not needed, and do not include instruction pages in the case file.

Appendix E – 100-Gallon Product Drum Labels

Hazardous Waste: one on the opposite side of the bolt below the top chine.

Beryllium: two 180 degrees apart below the top chime with one directly across from bolt.

USA DOT 7A Type A: one next to or above serial number label.

Radiological Label: one on the opposite side of the bolt below top chine.

>700 lb: three labels spaced evenly around drum, below lid.

SHENC: three labels spaced evenly around drums, below lid. These product drums contain TRU and LLD pucks.

MLLW: three labels spaced evenly around drum, below lid. These product drums are <100 nCi/g.

OFF SITE Waste: three labels placed evenly around drum, below lid.

Label Type	TRU Product Drum	LLD (MLLW) Product Drum	Blended Product Drum	IND Product Drum
Hazardous waste	X	X	X	X
Beryllium (see note1)	X	X	X	X
USA DOT 7A Type A	X	X	X	X
Radiological label	X	X	X	X
>700 lb	If applicable	If applicable	If applicable	If applicable
SHENC			X	X
MLLW		X	X (if product drum <100 nCi/g)	
Off-site waste *(can be determined by TFM at any time)*	Case by case	Case by case	Case by case	Case by case

NOTE1: Beryllium labels are determined by TFM for offsite waste.

AMWTP INSTRUCTION		
INST-FOI-20, Rev. 42	Issued: 04/09/14	Effective: 04/09/14 @ 0700 Hrs

Supercompactor and Post-Compaction Operations

Revision Number	Date Approved	Pages Affected	Description of Revision
41	04/03/14	Page 12	DCR-13312. Added requirement to apply a torque verified sticker to the 100-gallon drum.
42	04/08/14	Various	DCR-13157. Periodic review. Changes made as part of SCR-4537 implementation and comments received. A few editorial changes made. Incorporated DCR-13312.
42 FC1	04/24/14	Appendix E	DCR- 13405. Add note to Appendix E

FC-1 14W

Henderson, Mark

From: Geng, Julie C.
Sent: Thursday, April 24, 2014 10:16 AM
To: Henderson, Mark
Cc: Bolander, Thane W.; Moore, Rick
Subject: RE: FOI-20 FC

Criticality Safety concurs with the FC. Please sign for me per this email.

Julie Geng
AMWTP Criticality Safety
(208) 557-6366 desk
(208) 520-1188 cell

From: Henderson, Mark
Sent: Thursday, April 24, 2014 10:05 AM
To: Geng, Julie C.
Subject: FOI-20 FC

Attached is the FC request, please see Appendix E for the change.

McKean, Marti

From: Brian Warner [Brian.Warner@amwtp.inl.gov]
Sent: Thursday, April 24, 2014 2:18 PM
To: Kvamme, Debra; Roth, Fred; Thompson, Rick A.; Stoneberg, Ken; Carlson, Clydene; McKean, Marti; Walker, Sherrie; O'Neil, Sandra L.; Jensen, Jeff; Bolander, Thane W.; Powell, Wendy; Jackson, Jim M.
Subject: TrackWise: : AMWTP USQ Determination Doc # 85429: INST-FOI-20, Supercompactor and Post-Compaction Opertions, Rev 42, FC-1, has been closed

The following AMWTP USQ Determination # 85429: INST-FOI-20, Supercompactor and Post-Compaction Opertions, Rev 42, FC-1, has been closed on 04/24/2014 02:18 PM (GMT-6:00).

USQD Change Type: DCR
Change Number: 13405

Previously Approved USQ Determination:

A USQ DOES NOT EXIST based on the results of a PREVIOUSLY APPROVED USQ Determination: YES
Previously Approved USQ Determination Number: 84126

USQ Determination Results Summary:

1. This issue was processed as a PROPOSED CHANGE: NA
2. The determination was NEGATIVE (a USQ DOES NOT exist): NA
3. The determination was POSITIVE (a USQ DOES exist): NA
4. This issue was processed as part of the PISA PROCESS: NA
5. The determination was NEGATIVE (an actual inadequacy of the safety analysis DOES NOT exist): NA
6. The determination was POSITIVE (an actual inadequacy of the safety analysis DOES exist): NA
7. A USQ EXISTS based on conflicts with a requirement or condition of approval in the current Safety Evaluation Report(s): NA

USQ Determination Approvals:

USQ Evaluator: Thane Bolander
USQ Evaluation Date: 04/24/2014 02:09 PM (GMT-6:00)

USQ Reviewer: Jeffrey Jensen
USQ Reviewed Date: 04/24/2014 02:16 PM (GMT-6:00)

USQ Approver: Brian Warner
USQ Approved Date: 04/24/2014 02:18 PM (GMT-6:00)

Supercompactor and Post-Compaction Operations

(Controlled Activity)

Advanced Mixed Waste Treatment Project

Approval:

(*Signature on file. See DCR-13157.*) 04/08/14

Date

Verification of Effective Revision: (After verifying current revision, replace cover page on working copy if more space is needed.)

Initials	Date	Initials	Date	Initials	Date	Initials	Date

AMWTP INSTRUCTION		
INST-FOI-20, Rev. 42	Issued: 04/09/14	Effective: 04/09/14 @ 0700 Hrs

Supercompactor and Post-Compaction Operations

TABLE OF CONTENTS

1.0 PURPOSE/SCOPE 1

2.0 ROLES AND RESPONSIBILITIES 1

3.0 PRECAUTIONS AND LIMITATIONS/PREREQUISITES 2

3.1 Precautions and Limitations 2

3.2 Prerequisites 3

4.0 INSTRUCTIONS 4

4.1 Systems 410, 412, 420, 422, and 423 Operations 4

4.2 Criticality Cleanout and/or Squeezant Removal and Bag-Out 12

4.3 Manual and Infrequent Operations 17

4.4 Post-Job Review 26

4.5 Abnormal Operations 27

5.0 DEFINITIONS 30

6.0 REFERENCES 32

7.0 RECORDS 33

8.0 EXHIBITS 34

9.0 APPENDICES 34

Appendix A – Waste Tracking Maps A1

Appendix B – Tracking Status Codes Table B1

Appendix C – Waste Incompatibility C1

Appendix D – Handler Mast Positions D1

Appendix E – 100-Gallon Product Drum Labels E1

Appendix F – Product Drum Preparation and Lidding Guide F1

Appendix G – Stuck Puck "Stop" Placement G1

Appendix H – Revision Log H1

AMWTP INSTRUCTION		
INST-FOI-20, Rev. 42	Issued: 04/09/14	Effective: 04/09/14 @ 0700 Hrs

Supercompactor and Post-Compaction Operations

1.0 PURPOSE/SCOPE

This document provides instructions for monitoring automated sequencing and manual and/or infrequent operations of the Supercompactor and post-compaction. Systems 410 In-feed Glovebox, 412 Supercompactor, 420 Puck Handling Glovebox, 423 Waste Drum In-feed, and 422 Product Drum Import and Export are covered in this procedure. Normal operations are controlled by the *Integrated Control System* (ICS; see def.).

2.0 ROLES AND RESPONSIBILITIES

Performer	Responsibilities
Operator/Operations Technician (OT)	• Unless otherwise specified, performs the steps in this instruction and performs limited radiological surveys.
Shift Supervisor (SS)	• Performs visual inspections and *independent verifications* (see def.) • Ensures value discrepancies are logged in eSOMS, or equivalent, as an open item until the *mass controlled area* (MCA; see def.) is reset • Reviews, signs, and dates Form-1914, Squeezant Jar Tracking within Supercompactor Glovebox, as necessary • Checks puck placement against *plant optimization system* (POS; see def.) and ensures POS is running • Performs ICS trigger/release event and ensures puck is updated to correct product drum • Notifies Nuclear Criticality Safety when a *criticality working requirement* (CWR; see def.) or *nuclear material safety limit* (NMSL) noncompliance is discovered • Resets MCA inventory • Notifies Environmental • Generates nonconformance reports (NCRs) in accordance with MP-Q&SI-5.4, Identification of Nonconforming Conditions • Logs changes to MODE in SS log or eSOMS equivalent • Updates status boards with the OT • Performs post-job reviews.

Performer	Responsibilities
Plant Shift Manager (PSM)	• Identifies and enters barcode information • Ensure value discrepancy is logged in eSOMS, or equivalent, as an open item until the MCA is reset • Performs visual inspections and independent verifications • Reviews, signs, and dates Form-1914, as necessary • Checks puck placement against POS and ensures POS is running • Performs ICS trigger/release event and ensures puck is updated to correct product drum • Notifies Nuclear Criticality Safety when a CWR or NMSL NCR is discovered.
Visual Examiner (VE)	• Performs visual examinations on newly-generated waste (NGW) packages • Assigns rigging materials to puck during the removal of damaged or oversized pucks from Systems 412 or 420.
Nuclear Criticality Safety	• Approves written recovery plan.

3.0 PRECAUTIONS AND LIMITATIONS/PREREQUISITES

3.1 Precautions and Limitations

3.1.1 The maximum daily throughput of the Supercompactor is 150 drums (8,250 gal) per day.

(HWMA/RCRA Permit)

3.1.2 The *MCA for the Supercompactor* (see def.) glovebox shall be controlled to 425 fissile gram equivalent (FGE).

(RPT-NFCS-03, CWR 7.3.2)

3.1.3 Alternative methods for hazardous energy control are used in this procedure for servicing tasks that are routine, repetitive, and integral to the use of the equipment for production in accordance with MP-COPS-9.20, Hazardous Energy Control Processes.

3.1.4 The Supercompactor glovebox shall be inspected and, if necessary, cleaned (criticality cleanout) prior to exceeding the MCA mass limit.

(RPT-NFCS-03, CWR 7.3.5)

3.1.5 All hoisting and rigging and inspections of equipment shall be performed in accordance with MP-CMNT-10.8, Hoisting and Rigging.

3.2 Prerequisites

3.2.1 The following RPT-TSR-03, Technical Safety Requirements, surveillance requirements have been verified to be within periodicity and are logged in eSOMS or equivalent (Supercompactor control room).

Surveillance Requirement	Performed Per	Periodicity
FTS operability SRs (SR 4.4.1 through SR 4.4.7)	INST-MI-1033, FTS Interlock/Alarm Functions Surveillance Checks	Annually
Criticality Incident Detection and Alarm System (CIDAS) preregulators (SR 4.5.1)	INST-MI-1018, CIDAS Surveillance Checks	Semi-Annually.
CIDAS operability check (SR 4.5.2)	INST-MI-1018	Annually
CIDAS power supply test (SR 4.5.3)	INST-MI-1018	Annually

(RPT-TSR-03, SRs 4.4.1 through 4.4.7 and SRs 4.5.1 through 4.5.3)

3.2.2 Before performing fissile material operations within the Supercompactor glovebox MCA or squeezant handling in the Supercompactor room, the CIDAS is in *OPERATION MODE* (see def.).

(RPT-TSR-03, LCO 3.5)

3.2.3 PDIT-410011, PDIT-410017, and PDT-420004 indicate within -0.9 and -1.8 inches water gage.

3.2.4 Prior to performing Supercompactor operations, the glovebox fire suppression system is operational or compensatory measures, approved by the fire marshal or fire protection engineer, are in place.

3.2.5 The CWRs directly controlled by operators/supervisors are posted in the Supercompactor floor area and in control room.

(RPT-NFCS-03, CWR 7.3.10)

3.2.6 Tools are to be removed from the 412 glovebox prior to starting compaction operations for shift.

3.2.7 A pre-job brief has been performed in accordance with MP-COPS-9.17, Performing Pre-Job Briefings and Post-Job Reviews, as directed by the SS prior to performing work in this procedure.

4.0 INSTRUCTIONS

4.1 Systems 410, 412, 420, 422, and 423 Operations

NOTE: *Sections 4.1.1 through 4.1.5 may be performed in parallel as necessary to process multiple drums.*

4.1.1 Virtual Product Drum Creation

NOTE 1: *Off-site waste has a purple background, No Source* Lower Limit of Detection *(LLD; see def.) has a green background, and over limit has a red background on the POS screens.*

NOTE 2: *Virtual product drums (VPDs) are ≤200 FGE and ≤950 lb.*

(RPT-NFCS-03, NMSL 7.2.2; RPT-NFCS-07, NMSL 7.1 #5)
(MP-TRUW-8.1; CCP-PO-003)

NOTE 3: *Silver and direct feed drums can be placed into the same product drum together.*

4.1.1.1 **WHEN** building and running a VPD,
THEN use **ONE** of the following:

- Transuranic (TRU) VPD–Central Conveyor System (CCS) drum and/or 423 drums (Direct Feed [DF]) that add up to >100 nCi/g
- TRU mixed low-level waste (MLLW) VPD–CCS drum and/or 423 drums (DF) that are <100 nCi/g and add up to <100 nCi/g.

- LLD (MLLW) VPD—Drums from CCS and/or 423 (DF) that add up to <100 nCi/g and LLDs with or without a source container

NOTE 1: *Blending product drums will be assayed using the Super High-Efficiency Neutron Counter (SHENC) after exiting the Treatment Facility.*

NOTE 2: *An LLD drum without a source container cannot be used in blending mode.*

NOTE 3: *Building a blending product drum is the least desirable option when creating VPDs and should not be created unless directed by management.*

- Blending VPD-CCS and/or 423 (DF) TRU and LLD drums when final are >250 nCi/g
- Blending VPD (MLLW)—Any LLD (silver or DF) and any amount thereof
  AND
  One TRU that is <100 nCi/g
  BUT when finished, the product drum is <100 nCi/g
- Blending VPD (MLLW) —Any TRU (silver or DF) that is <100 nCi/g and any amount thereof
  AND
  One LLD
  BUT when finished, the product drum is <100 nCi/g.
- IND VPD—1 silver *indeterminate assay drum* (see def.) with other silvers >10 FGE.

4.1.1.1.1 **IF** building a blending VPD is necessary, **THEN** perform the following:

4.1.1.1.1.1 Navigate to the AMWTP "Container" screen in *Waste Tracking System* (WTS; see def.) **AND** check for the MD item description code (IDC) in the "Source Container" of the VE button for each drum in the VPD.

4.1.1.1.1.1.1 **IF** there are any container(s) with MD IDC in the VPD, **THEN** ensure ^{238}Pu does not exceed 3g for the total VPD.

NOTE: *During VPD creation, >80* ^{239}Pu equivalent curies *(see def.; PE-Ci) drums may be encountered. The following steps are acceptable for processing these drums through Supercompaction without generating an NCR prior to compaction.*

4.1.1.1.2 **IF** building a VPD that is >80PE-Ci, **THEN** ensure it will be <150 PE-Ci when final product drum is created.

4.1.1.1.2.1 **IF** single drum (silver or DF) is >150 PE-Ci, **THEN** contact the SS and do **NOT** place into VPD.

4.1.1.1.2.1.1 SS: Contact Nuclear Safety Lead.

4.1.1.1.2.1.2 SS: Initiate TYPE-3 Assay NCR for single drum >150 PE-Ci against drum.

4.1.2 General Operations of Systems 410, 412, and 420

NOTE 1: *The following steps may be performed in parallel as necessary to process multiple drums.*

NOTE 2: *Drums entering the Supercompactor are limited to ≤200 FGE.*

(RPT-NFCS-03, CWR 7.3.1)

4.1.2.1 Monitor, answer prompts, and perform the following as necessary:

4.1.2.1.1 Ensure drum barcode label and POS match for incoming drum into 410.

4.1.2.1.2 Inspect all DF drums prior to the piercing station for any significant deformities that may create difficulties in processing the drum.

4.1.2.1.2.1 **IF** any drums are observed to have significant deformities, **THEN** observe drum through compaction.

4.1.2.1.3 Check addition of container FGE in the WTS **AND** log on Form-1608, FGE Values, or electronic equivalent.

(RPT-NFCS-07, CWR 12; RPT-NFCS-03, CWR 7.3.2)

4.1.2.1.4 Check addition of container FGE in Fissile Tracking System (FTS) **AND** log on Form-1608 or electronic equivalent.

(RPT-NFCS-07, CWR 12; RPT-NFCS-03, CWR 7.3.2)

4.1.2.1.5 **IF** FTS and WTS values **DO NOT** match **AND** discrepancy has **NOT** been accounted for,
THEN STOP WORK
AND notify SS or PSM.

4.1.2.1.5.1 SS or PSM: Ensure value discrepancy is logged in eSOMS, or equivalent, as an open item until the MCA is reset.

4.1.2.1.5.2 **IF** during the investigation there are two or more AMWTP barcode labels with different barcode numbers on the container,
THEN STOP WORK
AND notify the SS of a violation of LCO 3.6.

4.1.2.1.5.2.1 SS or Designee: **IMMEDIATELY GO TO** Step 4.5.4 **WITHOUT RETURNING TO** this step.

(RPT-TSR-03, LCO 3.6)

4.1.2.1.6 Ensure product drum label matches ICS location prior to opening bagless transfer port (BTP) door.

4.1.2.1.7 Ensure puck placement matches POS VPD.

4.1.2.1.8 Ensure Supercompactor Load Out form has auto-populated prior to release of product drum from the port.

4.1.3 Leaving the Control Room Unmanned

4.1.3.1 **WHEN** leaving the control room unmanned **AND** the 412 system is **NOT** being operated from the floor, **THEN** at a minimum perform the following:

4.1.3.1.1 Engage locks on mould or shut down compactor.

4.1.3.1.2 Turn off hydraulic pumps, as necessary.

4.1.4 General Operations of System 423

NOTE: *A minimum of three drums is maintained inside the Venturi at all times.*

WARNING

In automatic mode, the conveyors can move at any time in either forward or reverse direction, causing injury to personnel.

4.1.4.1 Stay clear of moving conveyors.

4.1.4.2 **IF** System 423 trailer needs to be unloaded, **THEN** perform the following:

4.1.4.2.1 Place Clean Zone 1 Overhead Door (423MT101) in MAINTENANCE.

4.1.4.2.2 Monitor the unloading process.

4.1.4.2.3 **WHEN** drums are staged in clean room, **THEN** perform the following:

4.1.4.2.3.1 **IF** barcode reader (BCR) did **NOT** read container ID, **THEN** perform independent

verification map update with container ID
AND status code 999.

(RPT-NFCS-03, CWR 7.3.3)

4.1.4.2.3.2 Evaluate IDCs against Appendix C, Waste Incompatibility.

4.1.4.2.4 **IF** incompatible waste is introduced into the process,
THEN perform criticality cleanout prior to introduction to Supercompactor MCA.

(HWMA/RCRA Permit)

4.1.4.2.5 **IF** while performing a map update, the container(s) is discovered to have mismatched barcodes,
THEN STOP WORK
AND notify SS of violation of LCO 3.6.

4.1.4.2.5.1 SS or Designee:
IMMEDIATELY GO TO Step 4.5.4
WITHOUT RETURNING TO this step.

(RPT-TSR-03, LCO 3.6)

4.1.4.2.6 **IF** more than one container is identified with the same AMWTP barcode label identification numbers,
THEN notify the SS.

4.1.4.2.6.1 SS or Designee:
IMMEDIATELY GO TO Step 4.5.4
WITHOUT RETURNING TO this step.

(RPT-TSR-03, LCO 3.6)

4.1.4.2.7 Perform preliminary checks and promote, as necessary, in accordance with INST-FOI-27, FTS Operations.

4.1.4.3 Place Clean Zone 1 Overhead Door (423MT101) in AUTO.

4.1.4.4 Monitor automatic sequence of drum movement.

4.1.4.5 **IF** drum is destined for drum waste handling enclosure (DWHE),
THEN monitor and answer prompts as necessary.

4.1.5 General Operations of System 422

WARNING

In automatic mode, the conveyors can move at any time in either forward or reverse direction, causing injury to personnel.

4.1.5.1 Stay clear of moving conveyors.

4.1.5.2 Monitor, answer prompts, and perform the following as necessary:

NOTE: *The following substeps may be performed in parallel, as necessary, to process multiple drums.*

4.1.5.2.1 Monitor product drum unloading.

4.1.5.2.2 Ensure plug has been removed
AND prepare drum for docking to System 420 glovebox per Appendix F, Product Drum Preparation and Lidding Guide.

4.1.5.2.3 Record torque wrench calibration due dates in eSOMS, or equivalent, once per shift when in use.

4.1.5.2.4 Install lid on drum per Appendix F
AND ensure the following:

- Drum lid torqued to 55–60 ft·lb
- Nut is tightened to unthreaded side of eyebolt
- Filter is torqued to 180 in. lb/15 ft·lb
- A Torque Verified sticker has been signed, dated, and applied on the drum near the locking bolt.

4.1.5.2.5 SS: **IF** drum is <100 nCi/g and contains a >100 nCi/g puck,
THEN generate a TYPE-1 NCR against drum,

4.1.5.2.5.1 Ensure drum has an NCR tag.

4.1.5.2.6 **IF** product drum is >80 PE-Ci,
THEN contact the SS.

NOTE: *Initiation of TYPE-3 Assay NCR is required prior to product drum being moved out of WMF-676. The BN designator is not required (only the eight numeric container ID number is entered).*

4.1.5.2.6.1 SS: Initiate TYPE-3 Assay NCR for product drum >80 PE-Ci against the drum.

4.1.5.2.6.1.1 Ensure drum has an NCR tag applied.

4.1.5.2.7 RT: Ensure necessary surveys of container have been completed per INST-RS&C-6.22.1, Radiological Surveys, prior to container leaving the lidding station.

4.1.5.2.8 Apply appropriate labels as shown in Appendix E, 100 Gallon Product Drum Labels.

(HWMA/RCRA Permit; MP-TRUW-8.1; CCP-PO-003)

4.1.5.2.9 Complete WTS Supercompactor load out form.

(MP-TRUW-8.1; CCP-PO-003)

4.1.5.2.10 Monitor further drum movements in System 422.

4.1.5.2.11 Load product drums in trailer, as necessary.

4.2 Criticality Cleanout and/or Squeezant Removal and Bag-Out

NOTE 1: *When squeezant removal or bag out is routine and not part of a criticality cleanout, Supercompactor operations may continue.*

NOTE 2: *All waste containers are maintained closed except when allowed material is being placed into them or being taken out of them.*

(RPT-NFCS-07, CWR 7; HWMA/RCRA Permit)

NOTE 3: *The initial sparge cycle is 5 minutes. Additional sparge cycles of 1 minute are required between collection container filling events.*

NOTE 4: *Only opaque containers are used for liquid collection.*

(HWMA/RCRA Permit)

4.2.1 **IF** liquid is found in the sump,
THEN fill squeezant jar.

4.2.1.1 **IF** liquid has been added to squeezant jar,
THEN ensure Form-1914 has been generated
AND Columns 1 and 2 have been completed.

4.2.2 **IF** glovebox cleaning and bag-out is required,
THEN perform the following steps, as necessary:

NOTE: *The following steps may be performed in parallel as necessary to meet operational needs.*

4.2.2.1 Visually inspect/clean the following areas for debris:

- System 412 glovebox, from east edge of turntable to unload positions
- Lower mould (ram and mould)

- Puck recovery (trolley is rolled out for inspection underneath trolley)
- 420 glovebox (all pucks have been removed)
- Sump.

NOTE: *The maximum waste packet size the packet assay system in special-case waste will assay is 11.8 in. in diameter by 13 in. high and no more than 50 lb.*

4.2.2.2 **WHEN** performing bag out,
THEN ensure the following steps are performed, as necessary:

4.2.2.2.1 VE: Perform visual examination on NGW package per INST-FOI-17, Facility Visual Examination Operations.

4.2.2.2.2 Handle spills per INST-OI-88, Spill/Leak Response and Cleanup.

(RPT-NFCS-07, CWR 22)

4.2.2.2.3 Double-bag all waste at the collection area.

4.2.2.2.4 Label squeezants jar(s) outermost bag with a "Packet" barcode label.

(HWMA/RCRA Permit)

4.2.2.2.4.1 Ensure only one sqeezant jar is included per "Packet" bag.

4.2.2.2.5 Label waste debris outermost bag with a "NGW Package" barcode label.

(HWMA/RCRA Permit)

4.2.2.2.6 **IF** squeezant jar(s) have been removed from the glovebox,
THEN ensure Columns 3 and 4 of Form-1914 have been completed for each jar.

(RPT-NFCS-03, CWR 7.3.7)

4.2.2.2.6.1 **IF** a discrepancy is found between Form-1914 and what was removed from the glovebox,
THEN STOP WORK
AND notify SS.

NOTE: *Squeezant packets can be placed in containers smaller than a 55-gal drum for transfer to a permitted storage drum (PSD) or processing. Temporary/interim storage of such transfer devices is not permitted.*

(RPT-NFCS-03, CWR 7.3.8)

4.2.2.3 Ensure containers that contain fissile materials associated with Supercompactor glovebox MCA are removed from the room **OR** are sealed.

(RPT-NFCS-03, CWR 7.3.5.2)

4.2.2.4 **IF** bulk loading or placing individual packet(s)/NGW packages in a 55-gal drum within a criticality cleanout,
THEN ensure the drum is prepared as follows:

4.2.2.4.1 Ensure the drum is a Skolnik or Myers steel 55-gal open-head drum marked DOT 7A TYPE A.

4.2.2.4.2 Ensure the drum is visually free of damage (e.g., holes, dents, rust).

4.2.2.4.3 Ensure the drum is empty and free of liquids prior to use.

4.2.2.4.4 Ensure the drum lid, gasket material, bung plug, drum ring, and drum bolt are in good condition and free of damage.

4.2.2.4.5 Ensure a NucFil-019SDS 3/4-in. bung filter and gasket are installed.

(HWMA/RCRA Permit)

4.2.2.5 **WHEN** bulk loading,
THEN place squeezants packets and NGW packages in separate drums.

(RPT-NFCS-03, CWR 7.3.6.1, 7.3.6.2, and 7.3.7; 1291-2004-001, CWR #3)

4.2.2.6 Ensure Form-1977, Drum Loaded from Supercompactor FGE Inventory Log (200 FGE Limit), is filled out.

4.2.2.6.1 Ensure a copy of Form-1914 for Squeezant Jars placed in PSD is attached to Form-1977.

NOTE: *Non-fissile items (e.g., gloves, packing material, and tools) may remain in the Supercompactor glovebox after criticality cleanout.*

(RPT-NFCS-03, CWR 7.3.5.1)

4.2.3 OT and SS or PSM: **IF** performing a criticality cleanout
AND cleanout is complete,
THEN perform the following independent verifications:

4.2.3.1 Perform visual inspection of the Supercompactor glovebox areas identified in Step 4.2.2.1.

4.2.3.1.1 Ensure there are no pucks in the Supercompactor glovebox suite (including product drums).

(RPT-NFCS-03, CWR 7.3.5.5)

4.2.3.2 Ensure containers that contain fissile materials associated with Supercompactor glovebox MCA are removed from the room **OR** are sealed.

(RPT-NFCS-03, CWR 7.3.5.2)

4.2.3.3 Ensure tools from cleanout are removed from the 412 glovebox and placed into the post-compaction glovebox.

4.2.4 SS or PSM: Review, sign, and date Form-1914, as necessary.

4.2.5 **IF** squeezant jars are entered on Form-1914,
THEN query the packet ID in the AMWTP Container screen.

4.2.5.1 Enter the jar ID and sump cycle in the comments section.

4.2.5.2 Save the record.

4.2.5.3 **REPEAT** Step 4.2.5, as necessary, for multiple containers.

4.2.6 Stop Sump Cycle.

4.2.7 **IF** squeezant jars are entered on Form-1914,
THEN enter Squeezant Jar barcode ID number(s) into the "Liquid Container" tab on the "Sump Management" screen of WTS.

4.2.8 Start new Sump Cycle.

NOTE: *The following steps satisfy the adequacy, independent verification, documentation, and resetting of the MCA for criticality working requirements associated with criticality cleanouts.*

(RPT-NFCS-03, CWR 7.3.5.3; RPT-NFCS-07, CWR 14)

4.2.9 OT and SS or PSM: **IF** performing a criticality cleanout
AND cleanout is complete,
THEN reset MCA inventory in WTS and FTS for the following amounts of debris left in the glovebox suite (including under System 410 rollers) to 8 FGE (roughly the size of a quart) or 25 FGE (roughly the size of a soccer ball):

(RPT-NFCS-03, CWR 7.3.3)

4.2.9.1 Select Criticality Zone conditions for WTS reset.

4.2.9.1.1 Select SC_IGB_2 for Boundary ID field.

4.2.9.1.2 Select Yes for Zone clean out has been completed field.

4.2.9.1.3 Select Update Zone.

4.2.9.1.4 Enter 8 or 25 (from above criteria) in New FGE Value field.

4.2.9.1.5 SS or PSM: **IF** concur with Area reset, **THEN** enter user ID and e-signature personal identification number.

4.2.9.1.5.1 Ensure Comment field contains the following:

- Operator inputting new FGE value
- FGE value.

(RPT-NFCS-03, CWR 7.3.3 and 7.3.5.4)

4.2.9.1.6 SS or PSM: **IF** there is a discrepancy in area reset or FGE value, **THEN REPEAT** Steps 4.2.9.1.1 through 4.2.9.1.5.1.

4.2.9.2 Reset FTS per INST-FOI-27.

(RPT-TSR-03, LCO 3.7; RPT-NFCS-03, CWR 7.3.5.4)

4.3 Manual and Infrequent Operations

NOTE: *Steps 4.3.1 through 4.3.8 may be performed as needed.*

4.3.1 Supercompactor Light Curtain/Safety Gate Checks

WARNING

Personal injury may occur if personnel place hands and arms into the glovebox while machinery is running.

NOTE 1: *The following activities are allowed to be performed using the Supercompactor light curtain/safety gate as an alternative energy control per Risk Assessment F-SCGB-01, Super Compactor Glovebox:*

- *Housekeeping/cleaning not associated with criticality cleanouts including placing maintenance debris in drums*

- *Passing tools back and forth in glovebox*
- *Adjusting/positioning drums/pucks*
- *Criticality cleanouts (410, 412, and 420 areas)*
- *Photo electric cell adjustment/replacement if verified less than 50V AC by drawing or other document*
- *Cleaning and lubricating of components.*

NOTE 2: *The 423 system venturi is not light curtain or safety gate protected and requires the use of a lockout/tagout.*

NOTE 3: *A light curtain/safety gate on gloveboxes serves as a safety interlock to protect the operator from moving machinery.*

4.3.1.1 Prior to breaking light curtain/safety gate for glove port access perform the following steps:

4.3.1.1.1 SS/PSM: Designate equipment to be run from ICS station prior to breaking light curtain.

4.3.1.1.2 Operate equipment designated in Step 4.3.1.1.1.

4.3.1.1.3 Break light curtain.

4.3.1.1.4 Verify equipment run in Step 4.3.1.1.2 will **NOT** operate from ICS station.

4.3.1.1.5 **IF** equipment runs after breaking light curtain/safety gate,
THEN STOP
AND contact SS for resolution.

4.3.2 Remove Damaged or Oversized Puck from System 412 or 420

NOTE 1: *Only personnel qualified in hoisting and rigging may perform hoisting and rigging operations.*

NOTE 2: *Appendices for manual moves are Appendix A, Waste Tracking Maps; Appendix B, Tracking Status Codes; and Appendix D, Handler Mast Positions.*

4.3.2.1 Abort 420 Master Scheduler
AND place system in manual mode.

4.3.2.2 Create or modify VPD in POS assigning the damaged/oversized puck to the correct product drum, as necessary.

4.3.2.3 Inspect all hoisting and rigging equipment prior to use.

(MP-CMNT-10.8)

4.3.2.4 Sling puck in 412/420 glovebox.

4.3.2.5 Place puck in assigned product drum.

4.3.2.6 VE: Perform update assigning rigging materials to puck in accordance with INST-FOI-17.

4.3.2.7 Record puck number, product drum number, and rigging materials in eSOMS, or equivalent.

4.3.2.8 SS or PSM: Perform independent verification of map update placing puck in handler, if necessary.

4.3.2.9 Ensure VE update is complete.

4.3.2.10 SS or PSM: Check puck placement against POS
AND ensure POS is running.

4.3.2.11 SS or PSM: Perform ICS trigger/release event
AND ensure puck is updated to correct product drum.

4.3.3 FTS Interlock Fault

NOTE: *The drum grip fault (410-CY-030) is the actual FTS interlock.*

4.3.3.1 Notify the SS of the fault.

4.3.3.2 **IF** the barcode was **NOT** read by the FTS BCR,
THEN perform manual barcode entry on the FTS client in accordance with INST-FOI-27.

(RPT-TSR-03, LCO 3.7)

4.3.3.2.1 Clear drum handler fault
AND place system in auto.

4.3.3.2.2 Start sequence, as necessary.

4.3.3.3 **IF** the fault is due to a high FGE level in the MCA,
THEN STOP WORK
AND notify SS/PSM and Criticality Safety.

(RPT-NFCS-03, CWR 7.3.2, 7.3.9)

4.3.4 Manual WTS Barcode Entry

4.3.4.1 First Operator: Initiate and answer prompts indicated by ICS message.

4.3.4.2 Second Operator: Answer prompts indicated by ICS message.

(RPT-NFCS-03, CWR 7.3.3)

4.3.5 Recovery from Slipped Puck (Alarm AL-420-A715)

4.3.5.1 Notify SS.

4.3.5.2 **IF** the cause of alarm is due to debris blocking the photo eye,
THEN obtain SS guidance for path forward.

4.3.5.3 **IF** the cause of alarm is due to a slipped puck, **THEN** perform the following:

4.3.5.3.1 Abort 420 Master Scheduler **AND** place system in manual mode.

4.3.5.3.2 Reposition puck.

4.3.5.3.3 Re-pick puck in automatic mode.

4.3.5.4 **IF** the alarm is caused by a slipped repositioned puck, **THEN GO TO** Section 4.3.2 for slinging puck.

4.3.6 Tripped Impact Switches

CAUTION

Movement of the puck handler with the impact protection bypassed may damage equipment.

4.3.6.1 **WHEN** using pendant to move puck handler, **THEN** ensure puck handler is in line of sight at all times.

NOTE: *This section is performed by at least two OTs: one in Electrical Room 222 and one in the Supercompactor floor area. Steps performed by the OT in the electrical room are identified as RM 222 and steps performed by the OT in the Supercompactor area are identified as OT. Steps that may be performed by either are not identified.*

4.3.6.2 Notify the SS.

4.3.6.3 RM 222: Obtain the key for the "Impact Protection Bypass Keylock" switch.

4.3.6.4 OT: Abort 420 Master Scheduler.

4.3.6.5 OT: Place system in manual mode.

4.3.6.6 RM 222: Insert the key and turn it to the ON position **AND** ensure the key remains on.

4.3.6.7 RM 222: Press and hold the IMPACT PROTECTION BYPASS HOLD-TO-RUN button.

4.3.6.8 OT: Ensure correct direction of movement.

4.3.6.9 OT: With System 420 Hold-to-Run pendent activated, raise puck handler to desired position.

4.3.6.10 OT: Deactivate System 420 Hold-to-Run pendent.

4.3.6.11 RM 222: Release the IMPACT PROTECTION BYPASS HOLD TO RUN button.

4.3.6.12 RM 222: Return the "Impact Protection Bypass Keylock" switch to the OFF position.

4.3.6.13 OT: Return system to normal configuration **AND** resume operations.

4.3.7 Introduction of Non-Fissile Maintenance Items or Tools into Supercompactor Glovebox

NOTE: *Only non-fissile maintenance items or tools may be transferred into the Supercompactor glovebox.*

(1291-2009-026)

4.3.7.1 **WHEN** using a 100-gal product drum to transfer non-fissile items into the 420 glovebox by way of 422, **THEN** perform the following:

4.3.7.1.1 Place cargo net (sling) or appropriate rigging materials, with non-fissile items in drum at delidding station.

4.3.7.1.2 Tape ends of netting or rigging materials to inside of drum about level with top of inner supports of drum.

4.3.7.1.3 OT and SS or PSM: Perform independent verification of the following
AND log in eSOMS or equivalent:

- Drum number
- Drum contents (contains non-fissile items only)
- Persons involved in performing independent verification.

(RPT-NFCS-03, CWR 7.3.3)

4.3.7.1.4 Prepare drum per Appendix F
AND ensure the taped ends do **NOT** interfere with inner lid resting on gasket.

4.3.7.1.5 Dock drum to either BTP 1 or BTP 2.

4.3.7.1.6 Open door.

4.3.7.1.7 Position puck handler over Park Place 6.

4.3.7.1.8 Using reach tools and post-compaction maintenance hoist, retrieve items from drum.

4.3.7.1.9 **WHEN** drum has been emptied of all items,
THEN use product drum for pucks.

4.3.7.2 **WHEN** using a 55-gal drum to transfer non-fissile items into the 410 glovebox by way of the 370,
OR bringing in an empty 55-gal drum for the removal of maintenance items/operations debris, and placing into the 410 glovebox by way of the 370,
THEN perform the following:

NOTE: *All movements in this section will be performed manually*.

4.3.7.2.1 Move 55-gal drum with equipment to turntable (IGB2).

NOTE: *The following steps are performed due to WTS and FTS being overridden during performance of these steps.*

4.3.7.2.2 OT and SS or PSM: Perform independent verification of the following and log in eSOMS or equivalent:

- Drum number
- Drum contents (contains non-fissile items only) or if empty
- Persons involved in performing independent verification.

(RPT-NFCS-03, CWR 7.3.3)

4.3.7.2.3 Ensure an active barcode label is affixed to drum.

4.3.7.2.3.1 Perform independent map update, if needed.

(RPT-NFCS-03, CWR 7.3.3)

4.3.7.2.4 SS/PSM: Place FTS in maintenance mode per INST-FOI-27.

4.3.7.2.5 Move drum to Un-Load station (SUP3).

4.3.7.2.6 Unload maintenance item(s)
AND load maintenance item(s)/operational debris as required.

4.3.7.2.6.1 **IF** loading drum with maintenance items
AND maintenance item will be re-used,
THEN do **NOT** perform visual examination.

4.3.7.2.6.2 **IF** loading drum with maintenance items or operational debris that will **NOT** be re-used, **THEN** ensure visual examination is completed per INST-FOI-17.

4.3.7.2.7 Move drum to turntable (IGB2).

4.3.7.2.8 SS/PSM: Place FTS in OPERATION mode per INST-FOI-27.

4.3.7.2.9 Perform independent map update, if needed.

(RPT-NFCS-03, CWR 7.3.3)

4.3.7.2.9.1 **IF** drum is loaded with maintenance item
AND maintenance item will be re-used,
THEN do **NOT** lid the drum.

4.3.7.2.9.2 **IF** drum is loaded with maintenance items or operational debris that will **NOT** be re-used, **THEN** ensure the drum is turned over to a material transfer/assay operator for lidding and assay of the drum.

4.3.7.2.10 Coordinate with material transfer operator to move drum to 370.

4.3.7.2.10.1 SS: If needed, ensure drum is turned over to a material transfer/assay operator for lidding and assay.

4.3.8 Manual Operations

NOTE: *The WTS and FTS safety functions cannot be bypassed while in manual operations.*

4.3.8.1 Ensure the desired manual move(s) can be safely performed.

4.3.8.2 Ensure any devices or sequences that will be affected by the anticipated manual operation are stopped.

4.3.8.3 Place the desired device(s) or system(s) into manual mode.

4.3.8.4 Perform the necessary manual movement(s).

4.3.8.5 Ensure the waste tracking map accurately reflects the status of the affected system.

4.3.8.5.1 **IF** the waste tracking map does **NOT** adequately reflect the status of the affected system,
THEN notify the SS and perform tracking map update.

4.3.8.6 Ensure that the applicable device(s) or system(s) are returned to automatic mode.

4.3.8.7 If necessary, reset any faulted sequences in the master scheduler(s) using the STOP or ABORT buttons, as applicable.

4.3.8.8 Ensure the applicable master scheduler(s) is running.

4.3.8.9 If necessary, re-initiate any sequences that were interrupted prior to or during manual operations.

4.4 Post-Job Review

4.4.1 SS: Perform a post-job review in accordance with MP-COPS-9.17.

4.5 Abnormal Operations

NOTE: *Sections 4.5.1 through 4.5.3 may be performed as needed.*

4.5.1 Discovery of Noncompliance

4.5.1.1 **IF** a CWR noncompliance is discovered,
THEN cease all movements.

4.5.1.1.1 Notify SS or PSM.

4.5.1.1.2 SS or PSM: Notify Nuclear Criticality Safety by end of shift.

4.5.1.2 **IF** an NMSL noncompliance is discovered,
THEN cease all movements.

4.5.1.2.1 Notify SS or PSM.

4.5.1.2.2 SS or PSM: Suspend operations.

4.5.1.2.3 SS or PSM: Notify Nuclear Criticality Safety by end of shift.

4.5.1.2.4 Nuclear Criticality Safety: Approve written recovery plan.

(RPT-NFCS-03, CWR 7.3.9, 7.3.9.1, 7.3.9.2)

4.5.2 Criticality Incident Detection and Alarm System Alarm

4.5.2.1 **IF** the CIDAS alarm speakers are emitting an audible "pipping" sound,
THEN take the following steps:

4.5.2.1.1 Place the CIDAS into *SUSPENSION MODE* (see def.).

(RPT-TSR-03, LCO 3.5)

4.5.2.1.2 Notify the SS.

4.5.2.1.3 Immediately cease all fissile material operations within the Supercompactor MCA and squeezant handling in the Supercompactor room.

(RPT-TSR-03, LCO 3.5)

4.5.2.1.4 OT and SS: Log the change to SUSPENSION MODE in the applicable operator log and the SS log, or eSOMS equivalent.

4.5.2.1.5 OT and SS: Update status boards.

(MP-COPS-9.7)

4.5.2.1.6 Place the system back into OPERATION MODE in accordance with INST-COPS-9.11.2, Resuming Operations after Suspension.

(RPT-TSR-03, LCO 3.5)

4.5.3 Shutdown That Will Exceed 14 Calendar Days

4.5.3.1 Perform **ONE** of the following within 14 days:

4.5.3.1.1 Perform a criticality cleanout per Section 4.2.

OR

4.5.3.1.2 SS: Notify Environmental of the shutdown so that a path forward to resuming normal operations will be determined.

(HWMA/RCRA Permit)

4.5.4 Mismatched AMWTP Barcode Label Identification Numbers on Waste Container or More than One Container with the Same AMWTP Barcode Label Identification Number(s)

4.5.4.1 SS or Designee: Immediately generate an NCR against all affected waste containers per MP-Q&SI-5.4, and if the container is accessible, attach an NCR tag to the container.

(RPT-TSR-03, LCO 3.6)

NOTE: *Items being included in the NCR disposition are not to be performed by the SS or designee at this time.*

4.5.4.1.1 **WHEN** writing the NCR,
THEN include the following in the "Disposition Description or CAP" block of the NCR:

- Use available information (move sheets, historical information, etc.) to determine barcode number of the container.
- Record any historical information available on the WTS container screen.
- Historical ID number from container will be removed by Acceptable Knowledge personnel or via software data change request prior to inactivating the container/barcode numbers in WTS.
- Inactivate the container/barcode numbers in WTS.
- Recreate the container in WTS with a new barcode number using the historical information noted above
- Disposition WILL NOT be implemented until QA concurrence is received.

4.5.5 Recovery of Stuck Puck in the Mould

4.5.5.1 Ensure that the ram and mould are clear of the trolley.

4.5.5.2 Move the trolley to the unload position using the manual ratchet system.

4.5.5.3 Place the 8 steel "stops" on the trolley per Appendix G.

4.5.5.4 Move trolley to the compact station using the manual ratchet system.

4.5.5.5 Lower mould using ICS until the mould rests on the "stops."

4.5.5.6 Lower ram until puck is pressed out of mould.

4.5.5.6.1 **WHEN** the puck is too high and cannot be pressed out of the mould because of its height, **THEN** raise mould until puck is out of the mould.

4.5.5.7 Raise the ram to the fully raised position.

4.5.5.8 Raise mould to fully raised position.

4.5.5.9 Move trolley to unload station using ICS.

4.5.5.10 Remove stops from trolley base and stage in puck recovery.

4.5.5.11 Return Supercompactor to normal operations.

5.0 DEFINITIONS

Indeterminate assay drum. An indeterminate assay result occurs when the reported activity for every TRU isotope is less than or equal to its associated MDA, but the resulting minimum detectable concentration (MDC) is >100 nCi/g.

Criticality working requirement. A criticality safety control derived from a criticality safety evaluation (CSE) that has been determined to ensure the prevention of accidental criticality. Compliance with CWRs ensures that operations are maintained at a level well below NMSL FGE (FGE ^{239}Pu). An isotopic mass of radionuclide normalized to ^{239}Pu calculated in accordance with MP-TRUW-8.1, Certification Plan for INL Transuranic Waste.

Independent verification. Person performing the independent verification will not be influenced by observation of or involvement in the activity that establishes the component position or status. For most operating activities, independence can best be achieved by separating the operation and the verification by time and distance.

Integrated control system. The ICS provides functional control for the systems located in the treatment facility. Additionally, the ICS interfaces for status with other systems such as instruments, compressed and breathing air, the Fire Damper Maintenance System, the WTS, and the POS.

Lower limit of detection. A drum containing no transuranic isotopes, or containing transuranic isotopes at or below the level of radioactivity, which, if present, will yield a measured value greater than the critical limit with a 95% probability. The critical limit is defined as that value which measurements of the background will exceed with a 5% probability.

Mass controlled area. One of four areas in the AMWTF where the total fissile mass of incoming containers is controlled. When the mass limit in an MCA is approached, the MCA is cleaned out, inspected, and the mass for the area reset.

MCA for the Supercompactor. The MCA originates at the FTS BCR between drum piercing and the Supercompactor trolley. Once a drum has traversed past the FTS BCR, the fissile material has entered the accountancy of the MCA. The MCA includes:

- The Supercompactor trolley

NOTE: *The room in which the Supercompactor glovebox suite resides is not part of the Supercompactor MCA. However, fissile materials removed from the Supercompactor glovebox suite are part of the MCA until sealed and/or removed from the area.*

- All Supercompactor gloveboxes (glovebox suite)
- Product drums connected to the Supercompactor glovebox suite
- Processed pucks residing in puck staging areas of glovebox suite
- Squeezants in the Supercompactor area (room) if associated with the current cycle (between criticality cleanouts) of the Supercompactor
- Drums, vacuums, and other receptacles containing fissile materials in the Supercompactor area (room) if associated with the current cycle (between criticality cleanouts) of the Supercompactor.

Nuclear material safety limit. A safety limit, derived from the CSE for the AMWTF, for ensuring criticality safety of fissile operations. Violating an NMSL is equivalent to a technical safety requirement (TSR) violation.

OPERATION MODE. The facility, process, or equipment has met its applicable TSR(s).

PE-Ci. An equivalent radiotoxic hazard of a radionuclide normalized to ^{239}Pu.

Plant optimization system. Inside the facility, POS will optimize the processing of drums through the Supercompactor to produce puck drums that meet all criteria, (i.e., requirements derived from MP-TRUW-8.1, CCP-PO-003, CPP Transuranic Authorized Methods for Payload Control (CCP CH-TRAMPAC), and the contract). The POS will process the drums in a way that optimizes two chosen process parameters; other process parameters will be controlled but not optimized.

SUSPENSION MODE. The facility, process, or equipment has not met its applicable TSR(s), or as directed by procedures or management (e.g., as required for maintenance, testing, or periods of inactivity).

Waste Tracking System. An interactive, database-driven system that provides real time information on waste items and containers, including waste description, generation process, field observations and measurements, location, and destination. Waste Tracking System is identified as equipment important to safety per RPT-DSA-02, Documented Safety Analysis.

6.0 REFERENCES

(1) AMWTP HWMA/RCRA Permit

(2) 1291-2004-001, Criticality Safety Evaluation, SCW Refrigerator and Drum Limits

(3) 1291-2009-026, Criticality Safety Evaluation, Movement of Open Drums from Supercompactor to Systems 335 or 345 Lidding Systems

(4) CCP-PO-003, CPP Transuranic Authorized Methods for Payload Control (CCP CH-TRAMPAC)

(5) INST-COPS-9.11.2, Resuming Operations After Suspension

(6) INST-FOI-17, Facility Visual Examination Operations

(7) INST-FOI-27, FTS Operations

(8) INST-MI-1018, CIDAS Surveillance Checks

(9) INST-MI-1033, FTS Interlock/Alarm Functions Surveillance Checks

(10) INST-OI-88, Spill/Leak Response and Cleanup

(11) INST-RS&C-6.22.1, Radiological Surveys

(12) MP-CMNT-10.8, Hoisting and Rigging

(13) MP-COPS-9.7, Control of Equipment and Systems Status

(14) MP-COPS-9.17, Performing Pre-Job Briefings and Post-Job Reviews

(15) MP-COPS-9.20, Hazardous Energy Control Processes

(16) MP-DOCS-18.2, Records Management

(17) MP-Q&SI-5.4, Identification of Nonconforming Conditions

(18) MP-TRUW-8.1, Certification Plan for INL Transuranic Waste

(19) Risk Assessment F-SCGB-01, Super Compactor Glovebox

(20) RPT-NFCS-03, Criticality Safety Evaluation for Supercompactor Operations

(21) RPT-NFCS-07, Criticality Safety Evaluation for the AMWTF

(22) RPT-DSA-02, Documented Safety Analysis

(23) RPT-TSR-03, Technical Safety Requirements

7.0 RECORDS

Records generated by this procedure are classified in accordance with the table below and dispositioned in accordance with MP-DOCS-18.2, Records Management.

Record Description	Classification
INST-FOI-20, Case File	Non-permanent WIPP/ENV1-J-1/Destroy 10 years after submittal
Form-1608, FGE Values	Facility Operating Record/ ENV2-a-1-a/Destroy 5 years after Life of Facility
Form-1914, Squeezant Jar Tracking within the Supercompactor Glovebox	Facility Operating Record/ENV2-a-1-a/Destroy 5 years after Life of Facility
Form-1977, Drum Loaded From Supercompactor FGE Inventory Log (200 FGE Limit)	Facility Operating Record/ENV2-a-1-a/Destroy 5 years after Life of Facility

8.0 EXHIBITS

None

9.0 APPENDICES

Appendix A – Waste Tracking Maps

Appendix B – Tracking Status Codes Table

Appendix C – Waste Incompatibility

Appendix D – Handler Mast Positions

Appendix E – 100-Gallon Product Drum Labels

Appendix F – Product drum Preparation and Lidding Guide

Appendix G – Stuck Puck “Stop” Placement

Appendix H – Revision Log

Appendix A – Waste Tracking Maps

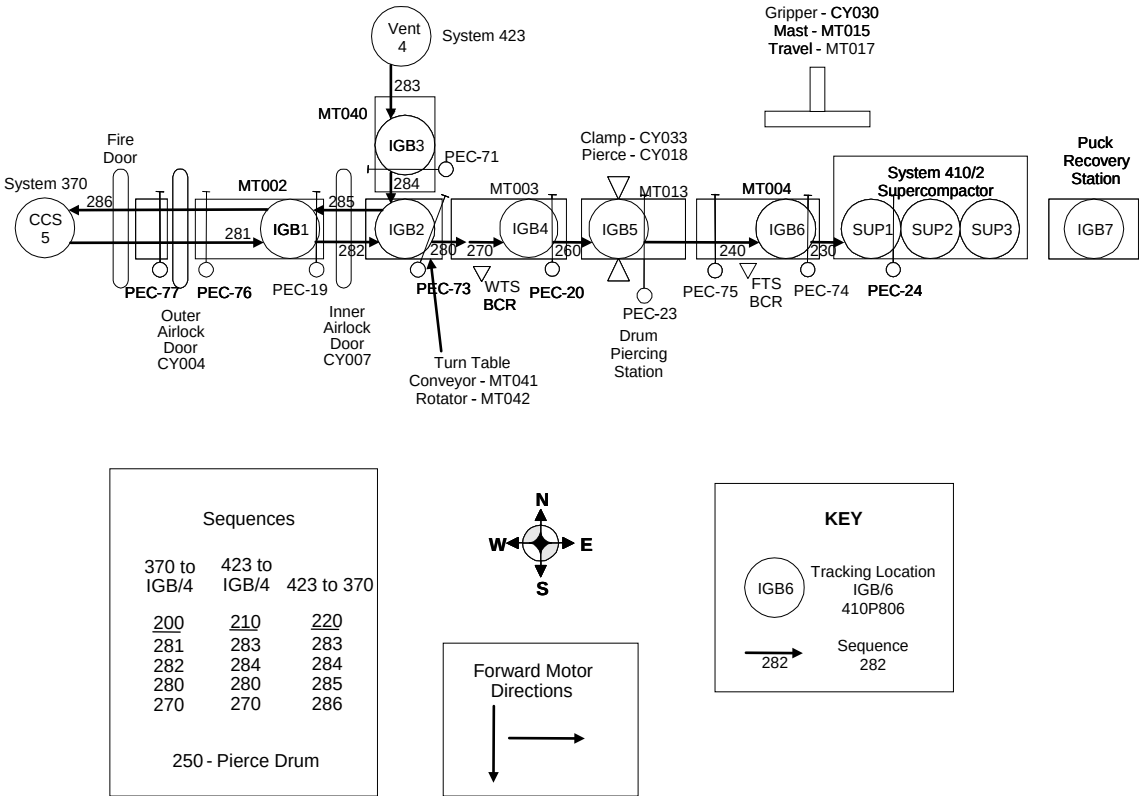

Figure A-1. Infeed glovebox waste tracking map.

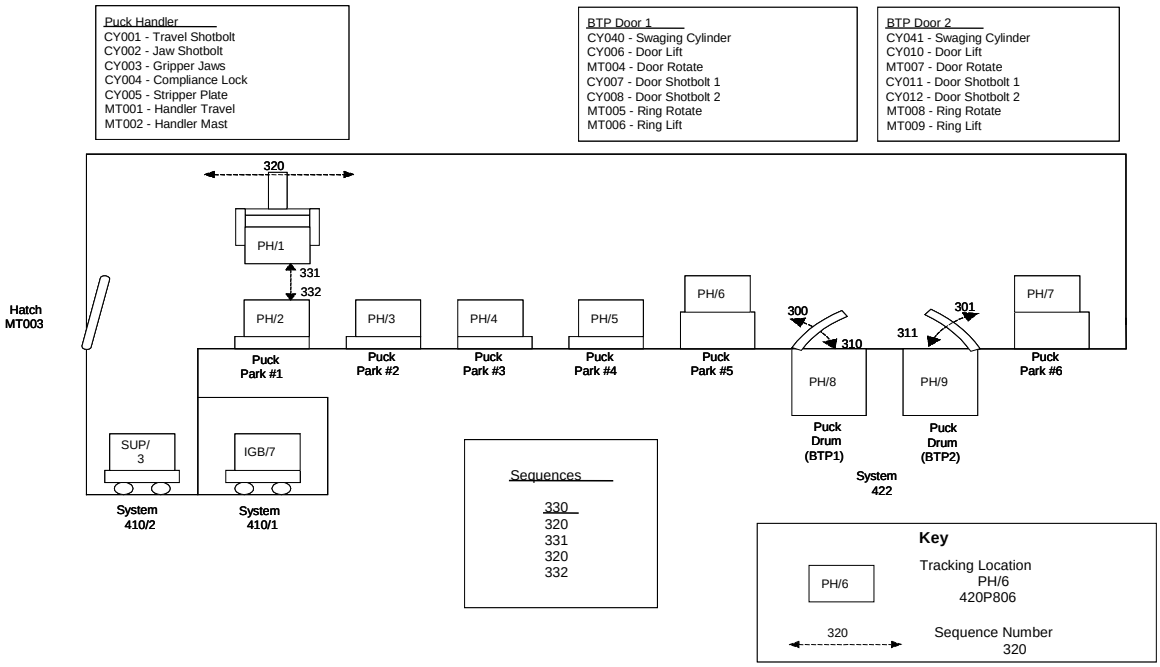

Figure A-2. Puck-handling glovebox waste tracking map.

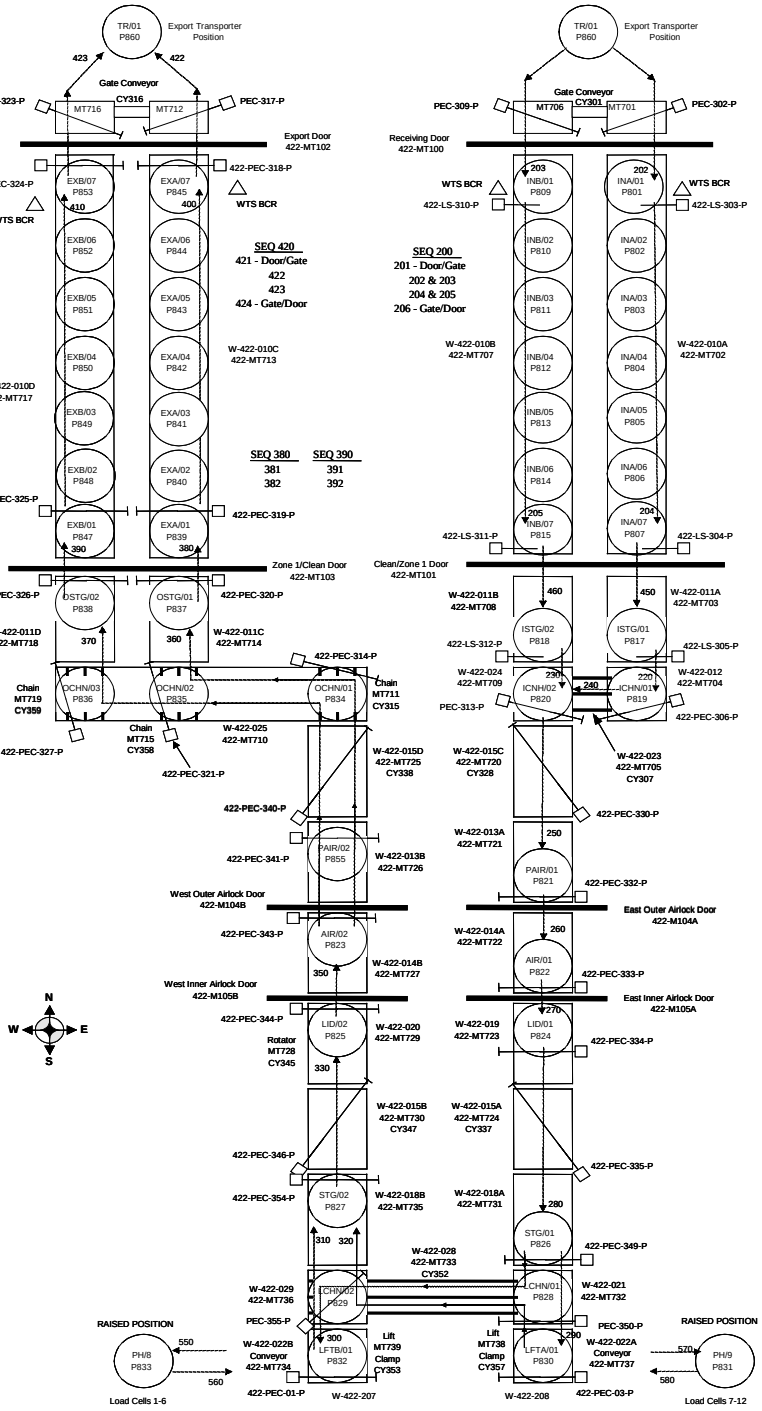

Figure A-3. Puck drum import/export system waste tracking map.

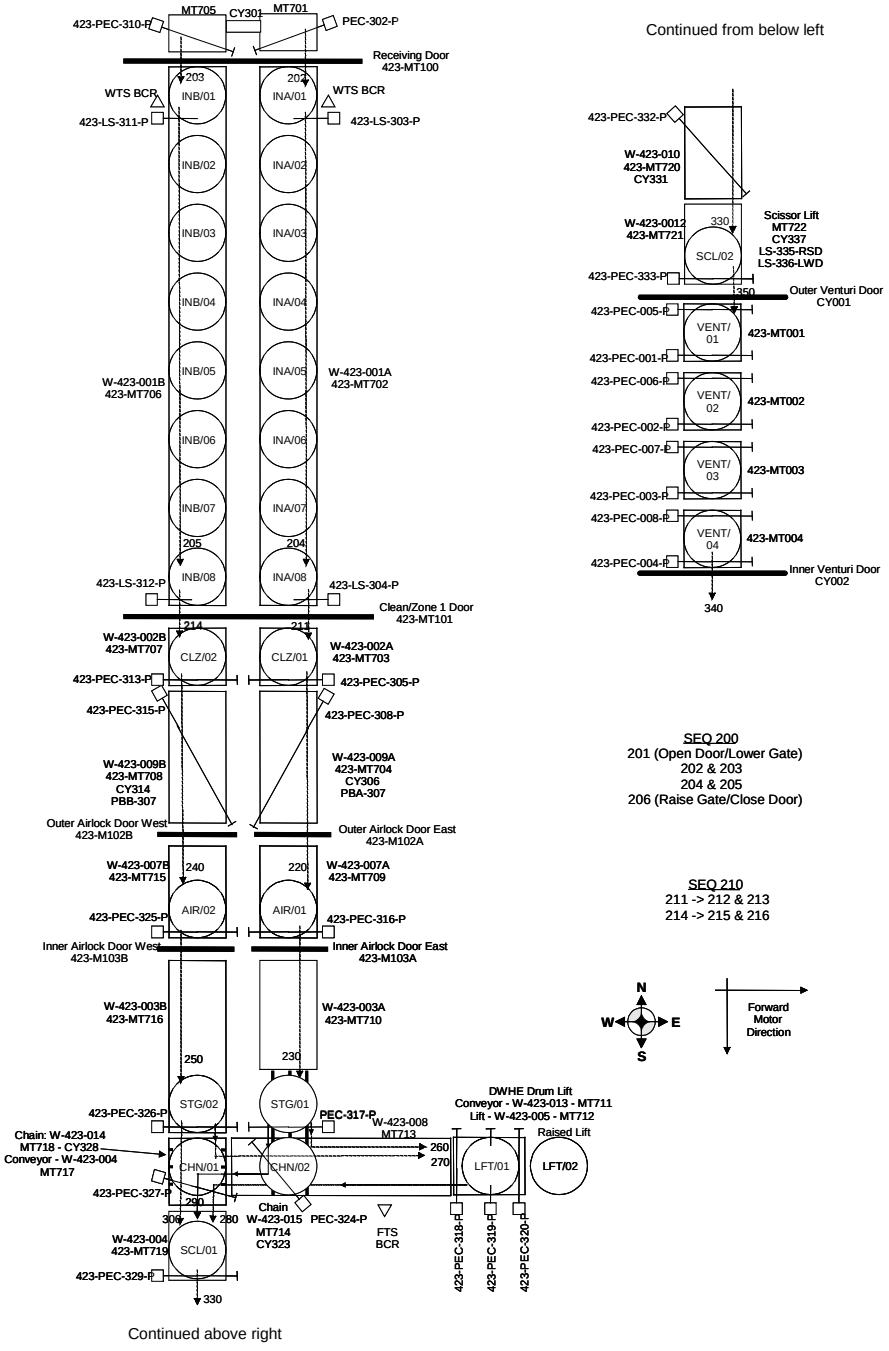

Figure A-4. Direct-feed waste infeed system waste tracking map.

Appendix B – Tracking Status Codes Table

Status Code	Description
0	Empty Location
50	Empty drum
75	Drum to be assayed
87	DF-MLLW (not pierced)
88	DF Drum Passed for Supercompaction (not pierced)
89	Drum Passed for Supercompaction (not pierced)
90	TFUP Overpack for DWHE (up only)
93	Drum for DWHE (up only)
110	Drum for Direct Shipment (Export)
160	Maintenance Item
411	Administrative Hold
501	LLD Drum
502	Indeterminate Assay
601	Reject Drum
800	Normal Puck
801	Recovered Puck
802	DF-MLLW Puck
820	Puck Drum (Lidded without Pucks)
821	Puck Drum (De-lidded without Pucks)
824	Puck Drum (De-lidded with Pucks)
825	Puck Drum (Lidded with Pucks)
826	DF-MLLW Puck Drum (De-lidded with pucks)
827	DF-MLLW Puck Drum (Lidded with pucks)
854	Feed Drum Supercompactor Pierced
866	Drum Overpacked
999	Container Status Unknown

Appendix C – Waste Incompatibility

Incompatible waste includes the following groups:

Waste Type	General Waste Description
Acids	AW-150: Laboratory Waste ID-150: Laboratory Waste MD-805: Asbestos Filters MD-813: Glass Filters and Fiberglass MD-834: High Level Acid RF-335: Absolute 8 x 8 Filters (Treatment Only) RF-338 Insulation and CWS Filter Media (Treatment Only) RF-241: Americium Process Residue
Oxidizers	ID-005: Evaporator Salts Retrieved RF AE-100: General Plant Waste MD-805: Asbestos Filters MD-811: Evaporator and Dissolver Sludge MD-813: Glass Filters and Fiberglass MD-834: High Level Acid RF-005: Evaporated Salts RF-241: Americium Process Residue RF-430: Resin, Ion Column-Unleached RF-745: Pits 11 & 12 Evaporator Salts SD-703: Inorganic Sludge
Caustics	MD-835: High Level Caustic
Halogenated Organics	RF-003: Organic Setups, Oil Solids RF-700: OASIS Waste RF-801: Solidified Organics BN-501: AMWTP PCB Soil BN-511 PCB Organic Homogeneous Solids (Treatment Only) BN-514 Absorbed Organic Squeezants (Treatment Only) BN-518: TRU Supercompactor Squeezants BN-526: Sample Returns BN-528: TRU PCB Liquids Generated During Retrieval BN-603: Absorbed Analytical Liquids BN-605 Absorbed Liquids TSCA/PCB (Treatment Only)

Waste Type	General Waste Description
	RF-743: Pits 11 & 12 Organic Setups RF-746: Pits 11 & 12 Pad Oil Drums SD-704: Organic Sludge SD-705: Debris SD-706: Soil UN-00A: Undefined homogeneous solids
Unknowns	PC-000: "True" or post-RTR unknown RF-095: Sludge (Unknown)
Pyrophoric Materials	RF-751: Roaster Oxide RF-999: Potential Roaster Oxide
Heterogeneous Debris	RF-998: Heterogeneous Debris
Heterogeneous Debris	IW-179: Early Waste Retrieval Heterogeneous Debris

(HWMA/RCRA Permit; HWMA/RCRA TSA IS Document)

Separation or physical segregation requirements consist of the following:

1. Containers of acids with 5 gal or more of residual liquids must be separated or physically segregated from caustics, and containers of acids with any residual liquids must be separated or physically segregated from halogenated organics.
2. Containers of caustics with 5 gal or more of residual liquids must be separated or physically segregated from acids, and containers of caustics with any residual liquids must be separated or physically segregated from halogenated organics.
3. Containers of oxidizers with any residual liquids must be separated or physically segregated from halogenated organics.
4. Containers of halogenated organics with any residual liquids must be separated or physically segregated from acids, oxidizers, and caustics.
5. Containers with unknown waste must be separated by physical distance.

A container holding mixed waste that is incompatible with any waste or any material stored nearby shall be segregated (separated by berm, dike, or wall).

(HWMA/RCRA Permit)

Appendix D – Handler Mast Positions

Top	Description	PLC Status Flag	Encoder Position			Available at Horizontal Position								
			Pre	Pos	Post	S3	P1	P2	P3	P4	P5	B1	B2	P6
18	Fully Raised	S_420MT002_FULLY_RAISED	24.0	26.4	33.0	X	X	X	X	X	X	X	X	X
06	*Maintenance Position 1*	—	26.0	32.0	37.0	X	X	X	X	X	X	X	X	X
07	POS7	S_420MT002_POS7	36.0	43.0	48.0	X	X	X	X	X	X	X	X	X
08	POS8 (2 in. above removal)		143.9	151.8	157.6	X								
20	*Maintenance Position 2*	—	36.7	43.7	49.0						X			X
14	*Maintenance Position 3*	—	45.0	52.3	56.0						X			X
15	*Maintenance Position 4*	—	65.6	72.6	78.0		X	X	X	X				
19	Above Protector Ring	—	70.6	77.6	85.1							X	X	
21	Above Protector Ring	—	70.6	77.6	82.6		X	X	X	X				
04	*Maintenance Position 5*	—	73.6	80.6	86.1	X								
02	POS2 (4 in. Above Protector Ring)	S_420MT002_POS2	76.0	82.0	87.0							X	X	
13	PP1 – PP4	—	78.5	85.4	87.0		X	X	X	X				
16	In Hatch	—	80.6	90.6	95.6	X								
17	Bottom of Drum at BTPs	—	110.55	120.5	121.2							X	X	
12	Fully Lowered at Removal	—	145.9	153.8	155.6	X								
Bottom														

NOTE: *The flags S_420MT002_BASKET, PICK_PUCK, PLACE_PUCK, RAISED_2INCH, STRPR_PLATE are defined in the programmable logic controller, but never get set when running. They appear to be carryovers from the original design/implementation for the handler MT002.*

Handler Mast Positions – Horizontal Travel

##	Description	PLC Status Flag	Encoder Position			
			Pre	Pos	Post	Tol
S3	Removal Station	S_420MT002_REMOVAL	0	7.75	16.0	1
P1	Puck Park 1	S_420MT002_PP1	27.5	34.7	39.0	1
P2	Puck Park 2	S_420MT002_PP2	51.0	58.1	63.0	1
P3	Puck Park 3	S_420MT002_PP3	75.0	82.1	87.0	1
P4	Puck Park 4	S_420MT002_PP4	98.5	105.7	111.0	1
P5	Puck Park 5	S_420MT002_PP5	123.5	130.8	136.0	1
B1	Bagless Transfer Port 1	S_420MT002_BTP1	149	156.15	162.0	1
B2	Bagless Transfer Port 2	S_420MT002_BTP2	188	195.3	201.0	1
P6	Puck Park 6	S_420MT002_PP6	214	222.0	224.0	1

Appendix E – 100-Gallon Product Drum Labels

Hazardous Waste: one on the opposite side of the bolt below the top chine.

Beryllium: two 180 degrees apart below the top chime with one directly across from bolt.

USA DOT 7A Type A: one next to or above serial number label.

Radiological Label: one on the opposite side of the bolt below top chine.

>700 lb: three labels spaced evenly around drum, below lid.

SHENC: three labels spaced evenly around drums, below lid. These product drums contain TRU and LLD pucks.

MLLW: three labels spaced evenly around drum, below lid. These product drums are <100 nCi/g.

OFF SITE Waste: three labels placed evenly around drum, below lid.

Label Type	TRU Product Drum	LLD (MLLW) Product Drum	Blended Product Drum	IND Product Drum
Hazardous waste	X	X	X	X
Beryllium	X	X	X	X
USA DOT 7A Type A	X	X	X	X
Radiological label	X	X	X	X
>700 lb	If applicable	If applicable	If applicable	If applicable
SHENC			X	X
MLLW		X	X (if product drum <100 nCi/g)	
Off-site waste *(can be determined by TFTM at any time)*	Case by case	Case by case	Case by case	Case by case

Appendix F –
Product Drum Preparation and Lidding Guide

Drum Preparation:

- Drum integrity inspection
- All 8 barcode labels match
- Drum contains 4 spacer tubes
- NucFil-019SDS is installed in outer lid and is hand tightened
- Outer lid removed from drum
- Inner lid gasket installed
- Inner lid installed (excess oil removed)
- NucFil 036-R-DA inner lid filter installed (filter media covers lid hole)

Drum Lidding:

- Lid gasket properly fitted in lid groove
- Lid is positioned allowing gasket to seat around drum curl
- Ring is placed to encompass lid and drum with lugs downward
- Bolt is installed through the unthreaded lug, with locking nut between lugs
- Ring is torqued to 55–60 ft lb (ring ends are not touching, but no greater than approximately ½-inch gap)
- Lock nut is tightened against unthreaded lug
- Lid bung–hole filter is torqued to 180 in. lb/15 ft lb.

Appendix G – Stuck Puck "Stop" Placement

Jammed puck removal Figure 5.1A

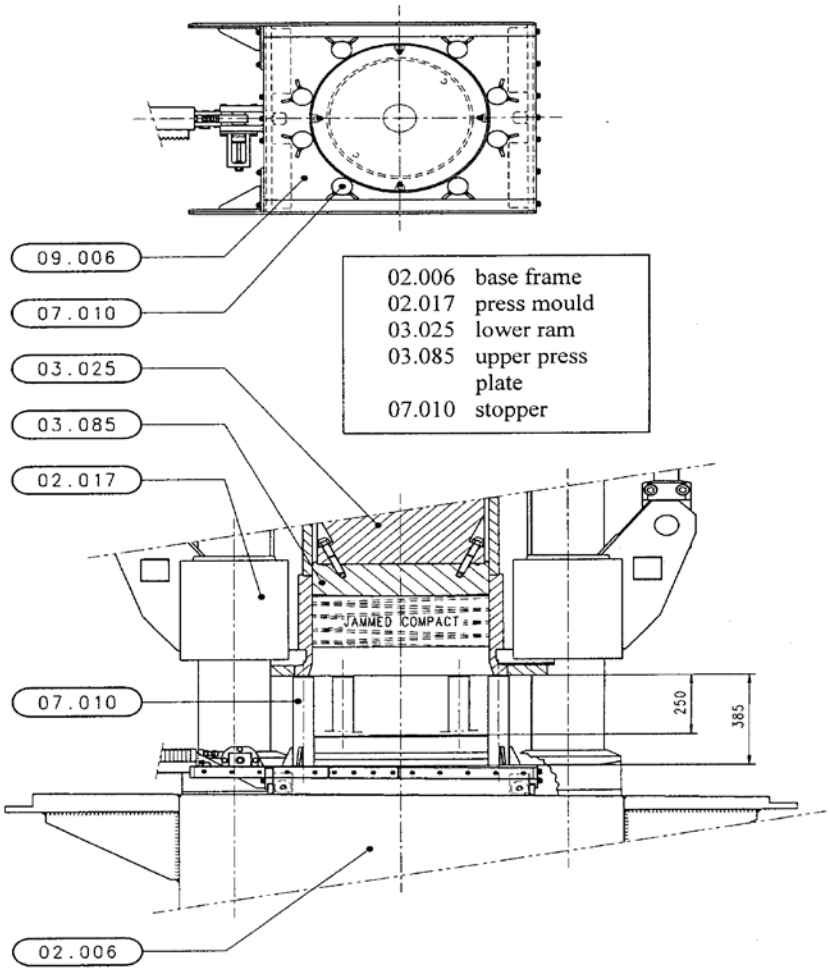

Appendix H – Revision Log

Revision Number	Date Approved	Pages Affected	Description of Revision
0	03/20/04	All	DCR-2817, Initial issue
1	04/12/04	1, 2, 8, 19–24, 26, 29, 30, 32, 36–39	DCR-2882. Change permit language before ORR and make other updates based on operations experience gained during mock hot operations
2	06/04/04	All	DCR- 2986. Revised to correct findings from MAR-4844. Move material from old Step 4.4.2 into Form-1545. Add new sections for response to abnormal situations.
3	06/10/04	Pg. 20	DCR-3090, Minor change to move Step 4.3.5 to 4.4.1.
4	06/20/04	Pgs. 20, 42	DCR-3101, Re-sequenced step into 4.8.2 and split it into two places to facilitate process flow.
5	06/16/04	Pg i	DCR-3119, Minor change to correct approval date in Revision Log.
6	06/30/04	Various	DCR-3154. Incorporated changes identified during corporate ORR
6FC-1	7/11/04	27	DCR-7/11/04-0700 [DCR-3181]. Delete note after 4.9.5.4.
7	08/11/04	Pgs. 3, 9, 14, 15, 23, 26, 27, 29	DCR-3185. Incorporate changes from FC-1 and AI-4746. Correct all references to appendices.
8	08/16/04	All	DCR-3244, Change effective date from “Pending DOE Approval of Treatment Facility Operations Startup” to 08/16/04.
9	09/29/04	Pgs 17, 22, 24, 31, and 32	DCR-3278, Resolve CBFO comments. Also renumber existing Step 4.4.8 to 4.4.7.3; remove container integrity check from 4.8.2.10; add new Step 4.8.2.12; and in 4.11.14 and 4.11.14.14 allow OT to use barcode utility.

Revision Number	Date Approved	Pages Affected	Description of Revision
9FC-1	10/22/04	7, 23, 24, E1	DCR-3379, Delete Step 4.5.5 and replace with attached steps. Delete Step 4.5.2.11. Add Appendix E.
9FC-2	10/22/04	19	DCR-3380, Add new step 4.5.5.4, "Select the Release Drum Button."
9FC-3	10/26/04	17, 22, 23	DCR-3385, Delete FC-1 and FC-2 and incorporate changes associated with WTS patch on 10/23/04.
9 FC-4	10/29/04	15, 19, 20	DCR-3401, Add note before 4.4 and delete 4.7.4 and 4.7.7. Add new 4.7.6.
10	12/01/04	All	DCR-3372. Update references and incorporate Field Changes 1 through 4, as applicable. Convert many prerequisites into steps and delete inapplicable prerequisites. Add new section 4.11 and add use of Form-1608 in Step 4.5.1. Add other operational enhancements. See DCR for a complete list of changes
11	1/27/05	Pgs 14, 18 and App. E	DCR-4`052. Add new Sections 4.5.1 and 4.7.9 for manual tracking. Delete 4.8.2.10.1.4. Add Appendix E for mast positions.
12	04/14/05	Pgs 6 – 14, 17, 23-28, 32-39, and App. A	DCR-4224. Delete all of Appendix A. Delete unnecessary precautions and limitations, and move some P&L statements to become notes, in accordance with CAR-8101. Move some requirements from Appendix A into Section 4.2. Incorporate field change and operator process improvement suggestions. Add manufacturer's recommendations for drum closure to Step 4.8.2.6
13	05/12/05	Pgs 3, 4, 7, 13, 14, 16, 22, 27, and B1	DCR-4285. Incorporated Field Changes 1, 2, and 3. Implement DOE/WIPP-02-3122, WIPP Waste Acceptance Criteria (WAC), Revision 3. Add new sections 4.4.6 and 4.4.7 to allow the compaction of LLD drums.

Revision Number	Date Approved	Pages Affected	Description of Revision
14	6/27/05	Pgs 14 & 23	DCR-4392. Addressed manufacturer's specifications and an operator aid for closing puck drums in 4.8.2.6.6. Incorporate 13 FC-1 (DCR-4315).
15	6/30/05	Pg 23	DCR 4402. Corrected outer lid bung-hole filter torque range in Step 4.8.2.7.
16	07/29/05	Various	DCR-4446 Added new verbiage to encompass damaged or Oversized Puck removal form glovebox and allow Supercompactor operations to continue during Squeezants removal.
16 FC-1	08/09/05	Pg 14	Incorporate Field Change-1 as described on DCR-4475.
17	10/31/05	All	DCR-4509 – Entire document rewrite to clarify barcode scans and status codes and process improvement for removal of a damaged oversized puck, also incorporating FC-1 from DCR-4475 and modifying FC-2 from DCR-4613, applying new template and minor editing.
18	02/14/06	Various	DCR-4714. Add new steps for manual placements and verification. Add reference #35 for Form-1689 to incorporate new sumps cycle. Incorporate Field Change DCR-4782.
18 FC-1	02/16/06	Pg 25	DCR-4828. Change Step 4.6.5.4.5.6 to read, "Repeat Steps 4.6.5.4.3 through 4.6.5.4.5.5 for multiple packets.
18 FC-2	02/19/06	Page 12, Pages 25, 27, and 29	DCR-4835. Deleted Step 4.2.8.1.1, requiring NCR when generating LLO drums and added Step 4.2.8.1.1, requiring check of physical barcode against WTS barcode. In Steps 4.6.5.4.5.3, 4.6.5.4.5.6, 4.6.6, and 4.7.1.5, change "packet" to "jars."

Revision Number	Date Approved	Pages Affected	Description of Revision
19	04/06/06	Various	DCR-4940. Added new Section 4.10.19 to incorporate ICS software modifications. Editorial changes made to meet requirements of MP-DOCS-18.1, Developing Written Work Instructions. Incorporated FC-1 (DCR-4828) and FC-2 (DCR-4835) changes.
20	4/09/06	Various	DCR-5020. Add Requirement to Note on pg. 21. Clarify the different labels needed for a puck drum. Incorporate FC-1 (DCR-4962) and FC-3 (DCR-5004).
21	06/21/06	Various	DCR-5056. Incorporate changes for consistency to annual DSA update implementation.
22	12/19/06	Various	DCR-5457. Implement CSA requirements.
22FC-1	3/3/07	31 of 59	DCR-5807. DCR3/3/07-1500. Additional criticality cleanout requirements.
22FC-2	04/05/07	31 of 59	DCR-5871. Additional inspection requirement for criticality cleanout.
22FC-3	04/23/07	14 of 59	DCR-5905. Additional step for picking and placing pucks.
23	07/10/07	Various	DCR-5903. New section added to allow for bag out between crit cleanouts; steps added for process flow. FC-2 supercedes FC-1. Edit notes, warnings, cautions, steps, per MP-DOCS-18.1.
23 FC-1	07/13/07	10, 12, & 24	DCR-6228. Add option in POS set-up to allow blending of LLD and TRU pucks in puck drums and clarification of Section 4.2 processing.
23 FC-2	08/10/07	47	DCR-6302. Editorial change Section 4.1.1 to Section 4.9 in Step 4.12.10.4.
23 FC-3	11/14/07	29	DCR-6609. Allow for packets to be stored in 5-gal bucket in RCRA-approved rooms.

Revision Number	Date Approved	Pages Affected	Description of Revision
24	04/15/08	Various	DCR-6707. Incorporated DCRs-6228, -6302, -6609. Changes to clarify rolldown requirements, implement ISMS, ensure operators log into ICS correctly, allow operator to do necessary checks and to use manual mode, include independent verification, makes roles and responsibilities specific to procedure, ensure adequate inspection is performed, new section to update WTS Map, delete steps that are no longer necessary, update MP-TRUW-8.3 references, edit per MP-DOCS-18.1.
25	05/20/08	Various	DCR-7044. Steps added and revised to ensure that only approved filters are used, entered into WTS, and applied properly per the vendor.
25 FC-1	06/05/08	4.7.6.5.5.4 Pg 36, 37	DCR-7226. Add new step to ensure WTS entry and barcode label match CAR-38637.
25 FC-2	10/13/08	Various	DCR-7633. Add Form-1375. Removed CWR, renumbered steps in procedure.
25 FC-3	10/16/08	Pg. 6/3.1.25 Pg. 28/4.6.1 Pg. 33/4.7.1 Pg. 38/4.7.10 Pg. 39/4.7.13	DCR-7652. Changing from less than to less than or equal to.
25 FC-4	10/17/08	Pg. 31	DCR-7659. Added Step 4.6.4.
26	11/11/08	Various	DCR-7667. Incorporated DCRs-7226, 7633, 7652, and 7659; added DOCS-BLUESHEET-01 changes, add steps to track squeezant bottles using Form-1914, editing per MP-DOCS-18.1.
27	02/02/09	Various	DCR-7751. Changes to clarify steps regarding bagout, moved steps for better process flow, updated the IDCs in Appendix C, and edited per MP-DOCS-18.1.

Revision Number	Date Approved	Pages Affected	Description of Revision
27 FC-1	02/09/09	11, 17	DCR-8008. Correct LCO text in Steps 4.2.2.4.1 and 4.4.3.4.1.
28	09/23/09	Various	DCR-8511. Incorporate DCR-8008. Update TSR SAC references (AI# 46147). Incorporate changes relating to CAR#39218.
29	11/23/09	Various	DCR-8721. Incorporated 2009 DSA/TSR update.
29 FC-1	02/03/10	Page 34	DCR-9022. Delete Step 4.7.5.2
30	03/03/10	Various	DCR-8989. Incorporated DCR-9022. Added new torque value, changed sequence of steps, edited per MP-DOCS-18.1.
30 FC-1	05/10/10	3	DCR-9235. Added new step for alternative isolation device.
30 FC-2	05/13/10	24	DCR-9251. Deleted Step 4.5.3.8 for surveying inner lids.
31	10/20/10	3 and 24	DCR-9135. Incorporated changes from field change DCR-9235 and -9251.
31 FC-1	12/13/10	31 and 40	DCR-9726. Added bag out step for when liquids are not present and clarification to Step 4.6.3.
31 FC-2	02/03/11	C1	DCR-9850. Incorporated new IDC changes to support SDCR-2255.
32	02/15/11	Various	DCR-9622. Due to the rewrite of this procedure, FC-1 (DCR-9726) no longer applies. Incorporated FC-2 IDC changes per DCR-9850. Rewrite to update per the evolved process with WTS and ICS downloads, and added a new section for introduction of non-fissile maintenance items/tools into the Supercompactor glovebox.
33	02/28/11	Various	DCR-9922. Implement SAC and LCO wording changes from TSR annual update.
33 TFC-1	4/11/11	5	DCR-10033. Implement ^{238}Pu controls.
33 FC-1	05/11/11	5	DCR-10128. Made TFC-1 permanent (DCR-10033).

Revision Number	Date Approved	Pages Affected	Description of Revision
34	07/18/11	Various	DCR-10032. Incorporated FC-1 (DCR-10033). Changed to Controlled Activity (AI 60418). Added drum inspection criteria, removed reference to INST-OI-24, relocated steps to abnormal section, and simplified squeezant handling during crit cleanout.
34 FC-1	07/19/11	Page 21	DCR-10272. Provide means to move maintenance item into supercompactor glovebox.
35	04/02/12	Various	DCR-10343. Added new sections for manual operations and to allow bagout of squeezants without performing criticality cleanup. Incorporated FC-1 (DCR-10272). Incorporated ITG-BLUESHEET-013, where applicable.
36	08/12/12	Various	DCR-11377. Incorporated 2012 DSA/TSR changes.
37	02/28/13	Various	DCR-11968. Changes to implement risk assessment.
38	04/18/13	Various	DCR-12285. Changes made to incorporate the new barcode LCO.
39	05/02/13	Various	DCR-12330. Incorporated changes for new NSTB barcodes.
40	09/30/13	Various	DCR-12747. Incorporated changes to implement new process for dealing with indeterminate silvers; new status code for indeterminate drums associated with FMP-1359; and to allow operations to deal with stuck pucks.
41	12/16/13	Various	DCR-12954. Incorporated changes for DSA implementation.

AMWTP INSTRUCTION		
INST-FOI-20, Rev. 42	Issued: 04/09/14	Effective: 04/09/14 @ 0700 Hrs

Supercompactor and Post-Compaction Operations

Revision Number	Date Approved	Pages Affected	Description of Revision
41	04/03/14	Page 12	DCR-13312. Added requirement to apply a torque verified sticker to the 100-gallon drum.
42	04/08/14	Various	DCR-13157. Periodic review. Changes made as part of SCR-4537 implementation and comments received. A few editorial changes made. Incorporated DCR-13312.

Retrieval Inspection Station Operations

(General Use)

Advanced Mixed Waste Treatment Project

Approval:

(*Signature on file. See DCR-13497.*) 07/23/14

Date

Verification of Effective Revision: (After verifying current revision, replace cover page on working copy if more space is needed.)

Initials	Date	Initials	Date	Initials	Date	Initials	Date

AMWTP INSTRUCTION		
INST-OI-09, Rev. 57	Issued: 07/23/14	Effective: 07/23/14 @ 0900 Hrs

Retrieval Inspection Station Operations

TABLE OF CONTENTS

1.0 PURPOSE/SCOPE 1

2.0 ROLES AND RESPONSIBILITIES 1

3.0 PRECAUTIONS AND LIMITATIONS/PREREQUISITES 2

3.1 Precautions and Limitations 2

3.2 Prerequisites 6

4.0 INSTRUCTIONS 6

4.1 General Instructions 6

4.2 Retrieval Contamination Enclosure Retrieved and Repackaging Container Creation 9

4.3 WTS Inspection Station for Legacy Non-Commingled Repackaged Waste 16

4.4 WTS Inspection Station for Legacy Commingled Waste/Commingled Repackaged Waste 17

4.5 WTS Inspection Station for Waste Container Overpacking 18

4.6 Container Creation for Cargo Unpacking 22

4.7 Cargo Closure 29

4.8 ContainerActivities for Waste Storage 30

4.9 Storage Requirements for the RCE Export Airlock, RCE, ICE, and CCE 33

4.10 End of Shift Activities 36

4.11 Post-Job Review 36

4.12 Abnormal and Infrequent Operations 37

5.0 DEFINITIONS 46

6.0 REFERENCES 48

7.0 RECORDS 50

8.0 EXHIBITS 50

9.0 APPENDICES 50

Appendix A – Container Labeling Reference Table A1

Appendix B – Torque Value Reference Table B1

Appendix C – Table of Incompatible IDCs C1

Appendix D – Historical IDC Reference Table D1

Appendix E – Contamination Control Enclosure IDC Reference Table E1

Appendix F – Revision Log F1

AMWTP INSTRUCTION		
INST-OI-09, Rev. 57	Issued: 07/23/14	Effective: 07/23/14 @ 0900 Hrs

Retrieval Inspection Station Operations

1.0 PURPOSE/SCOPE

This instruction provides for inspection station operations using the Waste Tracking System (WTS) for retrieval activities performed in the Retrieval Contamination Enclosure (RCE) control room and/or RCE export airlock and cargo container retrieval work in Pad-R.

This instruction covers storage requirements for the RCE, RCE export airlock, the Inner Contamination Enclosure (ICE), and the Contamination Control Enclosure (CCE). This instruction also covers waste container movement activities for the RCE export airlock.

2.0 ROLES AND RESPONSIBILITIES

Performer	Responsibilities
Plant Shift Manager (PSM)	• Notifies the Idaho National Laboratory (INL) Fire Department of the location of potential pyrophoric materials.
Retrieval Manager	• Evaluates conditions and responds per MP-RS&C-6.12, Response to Abnormal Radiological Conditions, and INST-OI-88, Spill/Leak Response and Cleanup.
Shift Supervisor (SS)	• Confirms Resource Conservation Recovery Act (RCRA) and air permit levels • Makes notifications • Generates nonconformance reports (NCRs) • Performs post-job reviews • Evaluates conditions.
Operations Technician (OT)	• Unless otherwise specified, performs the steps in this instruction.
Radiological Controls Technician (RCT)	• Characterizes drums for volatile organic compounds (VOCs) and contamination.
Radiological Controls Shift Supervisor (RCSS)	• Evaluates survey results • Determines proper radiological personal protective equipment (PPE) for inside the export airlock • Ensures continuous air monitors (CAMs) continue to monitor during abnormal conditions.

Performer	Responsibilities
Industrial Safety/Industrial Hygiene (IS/IH) or Designee	• Evaluates conditions • Monitors and evaluates surveys • Determines proper hazardous constituent mitigation PPE • Evaluates work area.
Inspection Station Operator (ISO)	• Performs data entry in WTS • Tracks RCRA and air permit limits.

3.0 PRECAUTIONS AND LIMITATIONS/PREREQUISITES

3.1 Precautions and Limitations

NOTE 1: *Resource Conservation Recovery Act regulatory limits are for activities for the intentional treatment of waste such as repackaging, liquid treatment, and physical sizing. Overpacking an original waste container does not constitute a RCRA treatment event.* Leaks/spills *(see defs.) managed under INST-OI-88 do not classify as a RCRA treatment event.*

NOTE 2: *The Environmental Air Permit regulatory limits are for activities where waste from a container is exposed to the environment. Examples of exposed waste include a breach in the original container, treating liquid waste, physical sizing of waste, etc. The Environmental Air Permit specifies the volume of waste that may be exposed, which is dependent upon the type of air filtration available.*

3.1.1 Waste container handling shall be performed in accordance with INST-OI-11, Waste Container Handling, once the container has been created at the WTS station and is ready for storage.

3.1.2 The movement/handling of containers in the RCE waste export airlock, and from the CCE to the WTS station shall be performed in accordance with hoisting and rigging activities as trained per MP-CMNT-10.8, Hoisting and Rigging.

3.1.3 Secondary containment (i.e., RCRA floor or spill pallet) shall be required if a container contains liquids, is bulged, or has questionable integrity.

(HWMA/RCRA Permit; HWMA/RCRA TSA IS Document)

3.1.4 *Isolation containers* (see def.) shall comply with the following at all times:

- 3-ft spacing, in a planar array, is maintained between isolation containers
- 18 in. spacing between all other fissile material
- Limited to 55-gal volume of waste
- Only one isolation container has a collar removed at a time
- Isolation container is continuously attended during the time the collar is off
- Isolation container shall have an anti-stacking cone attached upon lidding
- If the individual waste item that is to be placed into an isolation container is too large to fit into an isolation container, the single oversized item shall be placed into an empty box.

3.1.4.1 Collar and/or anti-stacking cone removal activity shall not be performed (other than overpacking, replacement, and decontamination) UNLESS written approval is provided by Nuclear Criticality Safety (NCS) staff.

(EDF-0831, CWR 13, 15, 18, 20, 21)

3.1.5 Any container identified to exceed 380 fissile gram equivalent (FGE) ^{239}Pu shall be promptly (within the same shift) placed into an isolation storage area. Nuclear Criticality Safety shall be notified if the container cannot be transferred during the current shift.

(EDF-0831, CWR 24)

3.1.6 Environmental shall be notified of any spill.

(IDAPA 58.01.01)

3.1.7 Newly generated waste shall be packaged and, if necessary, overpacked per INST-OI-24, Packaging Radioactive Waste, (for radioactive waste and mixed waste) and INST-OI-98, Packaging Non-Radioactive Waste. This does not include empty cargo containers

3.1.8 Bulged drum staging of no more than 100 drums is permitted and, while the drum vent system is operational, the maximum staging time before venting is limited to 120 days.

(RPT-ESH-049)

3.1.9 Each box shall be a minimum of 6 ft L × 3 ft 9 in. W × 2 ft D box in dimension, prior to interim storage.

(EDF-0831, CWR 9, 23)

3.1.10 Retrieved wastes pending transfer out of the TSA interim status (IS) units for *characterization* (see def.) are not required to be segregated or separated unless there are (1) known incompatibles, based on the information that exists on the container as retrieved, or (2) *commingled legacy repackaged waste* (see def.).

(HWMA/RCRA TSA IS Document; EDF-0831, CWR 20)

3.1.11 A photo ionization detector shall be required when waste handling activities occur in the export airlock.

(IH-EA-027; IH-EA-028)

3.1.12 Personnel shall maintain awareness so as to not place any portion of their head or torso over the top (lid) of any unvented drum, including empty unvented drums when practical.

(RPT-ESH-049)

3.1.13 Retrieved containers smaller than a nominal 55-gal drum shall be overpacked using a nominal 55-gal drum or larger internal diameter container, prior to interim storage in the TSA-RE.

(HWMA/RCRA TSA IS Document; EDF-0084; EDF-0831, CWR 22)

3.1.14 Overpacks shall contain only a single waste container.

(HWMA/RCRA TSA IS Document; EDF-0084; EDF-0831, CWR 22, 23)

NOTE: *Number of 55-gal drum equivalents retrieved, or repackaged, or a combination of both, cannot exceed 220 drum equivalents/day.*

3.1.15 Limits for the retrieval of containers shall not exceed Environmental Permit daily limit requirement (no annual limits specified):

AIR:

RCE (2 HEPA filtration) air limits:

150 containers of 55-gal drum equivalents/day of waste exposed.

ICE (3 HEPA filtration) air limits

Repackaged: 220 containers of 55-gal drum equivalents/day

Retrieved as Waste Exposed: 220 containers of 55-gal drum equivalents/day

BOTH: Repackaging and retrieval of containers may occur in ICE but cannot exceed 220 drum equivalents/day combined.

CCE (3 HEPA filtration) air limits:

Repackaged: 80 containers of 55-gal drum equivalents/day

Retrieved as Waste Exposed: 80 containers of 55-gal drum equivalents/day

BOTH: Repackaging and retrieval of containers may occur in CCE but cannot exceed 80 drum equivalents/day combined.

(WMF-636 PTC)

ENVIRONMENTAL:

RCRA repackaging: 300 containers of 55-gal drum equivalents/day.

(HWMA/RCRA TSA IS Document)

3.1.16 Waste containers may be placed in a planar array storage in the RCE/CCE once removed from the waste stack.

(EDF-0831, CWR 25)

3.2 Prerequisites

3.2.1 The WTS is available and operable.

3.2.2 The RCE exhaust ventilation is operating when operations are being performed in the RCE per INST-OI-30, WMF-636, Ventilation Systems, Maxi Heater, and VAC-PAC Operations.

(WMF-636 PTC; EDF-0496)

3.2.3 A pre-job brief has been performed in accordance with MP-COPS-9.17, Performing Pre-Job Briefings and Post-Job Reviews, as directed by the SS prior to performing work in this procedure.

4.0 INSTRUCTIONS

4.1 General Instructions

4.1.1 Perform any or all the following substeps, as required, during retrieval:

4.1.1.1 Ensure the barcode scanner is available and operable.

4.1.1.1.1 **IF** the barcode scanner is **NOT** operable, **THEN** document dual verification on the applicable operator logs (i.e., Form-2093, RCE Control Room Operator Log).

4.1.1.2 **IF** creating a box and dimensions are **NOT** approximately (4 ft × 4 ft × 8 ft),
THEN obtain drum equivalent calculation from engineering support.

4.1.1.3 ISO: Review Forms-2058, Retrieval ICE/CCE Daily Air Permit Tracking Sheet, -2059, and Retrieval RCE Daily Air Permit Tracking Sheet, to ensure the daily air permit and RCRA limits have **NOT** been achieved.

4.1.1.4 **IF** daily limits have been exceeded,
THEN suspend operations
AND notify the SS.

4.1.1.4.1 SS: Confirm that air permit limits have been exceeded.

4.1.1.4.1.1 SS: **IF** daily limits have been exceeded,
THEN notify Environmental and the PSM.

(WMF-636 PTC)

4.1.1.5 **WHEN** notified of a *breached* (see def.) container,
THEN Initiate Form-2058 or Form-2059, as applicable, and update.

4.1.1.6 **IF** a new cargo container has been docked to the CCE,
THEN notify WTS support of the container's barcode for SDCR preparation.

4.1.1.7 **IF** more than one container is identified with the same AMWWTP barcode label identification numbers**,**
THEN notify the SS.

4.1.1.7.1 SS or Designee: IMMEDIATELY **GO TO** Step 4.12.11 to create an NCR,
THEN RETURN TO Step 4.1.2.

(RPT-TSR-03, LCO 3.6)

NOTE: *Sections may be performed concurrently.*

4.1.2 **GO TO** the appropriate section from the following table according to task being performed,
THEN RETURN to this step, if further activities will be performed:

Task	Section
Retrieval Contamination Enclosure Retrieved and Repackaging Container Creation	4.2
WTS Inspection Station for Legacy Non-Commingled Repackaged Waste	4.3
WTS Inspection Station for Legacy Commingled Waste/Commingled Repackaged Waste	4.4
WTS Inspection Station for Waste Container Overpacking	4.5
Container Creation for Cargo Unpacking	4.6
Cargo Closure	4.7
Container Activities for Waste Storage	4.8
Storage Requirements for the RCE Export Airlock, RCE, ICE, and CCE	4.9
End of Shift Activities	4.10
Post-Job Review	4.11
Abnormal and Infrequent Operations	4.12

4.2 Retrieval Contamination Enclosure Retrieved and Repackaging Container Creation

NOTE: *The ISO performs this section unless otherwise indicated.*

4.2.1 Confirm the correct AMWTP barcode number for the target container to be created.

4.2.1.1 **IF** the container is an isolation or collection container, **THEN** attach barcode label(s) to the container per Appendix A, Container Labeling Reference Table, **AND** enter "No container markings" in the Container Markings field.

NOTE: *The preferred method for entering barcode numbers is the barcode scanner.*

4.2.2 Select the "AMWTP Container ID" field and enter the confirmed AMWTP barcode container ID.

NOTE 1: *The following container types may be selected for legacy source containers:*

- *Legacy (LC30)*
- *Legacy (LC55)*
- *Legacy (LC83)*
- *LCBOX.*

NOTE 2: *The following container types may be selected for single drum creation of overpacked containers:*

- *New 85 (7A85)*
- *Reused 85 (RC85)*
- *New 55 (425)*
- *New 110 (110).*

4.2.3 Select the "Container Type" field **AND** enter the appropriate container type.

4.2.4 Select the "Waste Type" field
AND enter the waste type of the container.

4.2.5 **IF** necessary,
THEN select "Location" field and enter container creation area.

4.2.6 ISO or OT: Retrieve as much information as possible from the waste container.

(HWMA/RCRA Permit; HWMA/RCRA TSA IS Document)

NOTE 1: *"Container Markings" tab needs to be completed for all data of containers retrieved or repackaged. This can be completed while assigning historical IDCs or after, if there is a matching historical ID.*

NOTE 2: *"AK/OP Recommended IDC" field is located in the "Container markings" tab when assigning IDCs.*

NOTE 3: *In the following steps, an example of commingled would be absorbent from one container entering the breach of another container.*

4.2.7 **IF** the container is considered commingled,
THEN recommend IDC BN-180
AND document ALL information (label color, associated containers, historical data, etc.) for the container in the "Container Markings" tab;
GO TO Step 4.2.12
WITHOUT RETURNING TO this step.

4.2.8 Enter the available data in the "Historical ID" field
AND press F9.

4.2.8.1 **IF** there is matching data in WTS that has **NOT** been assigned to another AMWTP container,
THEN ensure information retrieved from the container matches the information entered into WTS, and is consistent with the WTS response.

4.2.8.2 **IF** entering partial historical information,
THEN perform the following:

4.2.8.2.1 Enter the % sign before and after the partial historical information entry.

4.2.8.2.2 Press F9 to display all of the potentially matching numbers.

4.2.8.2.2.1 **IF** any of the following situations occur:

- No historical information populates
- The message "Container not found" is displayed
- The container information is incomplete
- The container information is unreadable
- The container is **NOT** labeled,

THEN enter all of the available information into the "Container Markings" tab.

4.2.8.3 **IF** no Historical ID populates,
THEN enter all historical markings into the "Container Markings" tab.

4.2.9 **IF** there is no Historical ID available and a Historical IDC is available on a Historical Traveler or written on the container,
THEN recommend the appropriate IDC from Appendix D that corresponds with the Historical IDC.

4.2.10 **IF** the Historical ID and/or Historical IDC is **NOT** legible or available, but the waste description is documented on a historical traveler or the container,
THEN recommend the appropriate IDC from Appendix D that corresponds with the waste description.

4.2.11 **IF** there are no container markings,
THEN enter "BN-180" for the IDC in the "AK/OP Recommended IDC" field located in the "Container Marking" tab.

4.2.12 Ensure "Container Type" field matches the container being created.

4.2.13 **IF** container should **NOT** be vertically unpacked (i.e., container wrapped in herculite, poor integrity, invert overpacked, contains repackaged materials, etc.),
THEN check the "No Vertical Unpack" box.

4.2.14 Select the "Retrieval Area" field and enter the retrieval area and cell.

4.2.15 Select "Container Weight" field and enter the weight.

4.2.15.1 **IF** creating an inner container,
THEN subtract empty overpack weight from scale weight.

4.2.15.2 **IF** weight is **NOT** available,
THEN enter default weight of 1 lb.

4.2.16 **IF** container is a box,
THEN select the "Box Dimensions" field
AND enter box dimensions.

4.2.17 **IF** container is a bulged drum,
THEN select "Yes" in the "Bulged/venting Required" drop-down pick list.

4.2.18 **IF** container is **NOT** a bulged drum,
THEN select "No" in the "Bulged/venting Required" drop-down pick list.

4.2.19 Enter the dose rates in the appropriate fields.

4.2.19.1 **IF** dose rates are **NOT** available,
THEN use the populated default values.

4.2.20 Locate the "^{239}Pu FGE" field in the "Historical ID" tab, if available,
AND ensure that the value is ≤200 FGE for drums
OR ≤325 FGE for boxes.

4.2.20.1 **IF** the historical FGE value is >200 FGE but ≤380 FGE for drums
OR >325 FGE but <380 FGE for boxes,
THEN affix "FGE>WAC" label to container(s).

(EDF-0034, CWR 7.3.2)

4.2.20.2 **IF** container is >380 FGE,
THEN perform the following:

4.2.20.2.1 Suspend operations.

4.2.20.2.2 Notify the SS.

4.2.20.2.3 SS: Notify PSM.

(EDF-0831, CWR 24)

NOTE 1: *The visual classification of 5 is used only for legacy repackaging.*

NOTE 2: *Visual classification is for container being created in WTS. Inner container visual classification should be entered in "Container Markings" comments*.

4.2.21 Select the "Visual Classification" tab;
THEN enter the visual class of the container.

4.2.21.1 Ensure each field is filled out with the applicable information.

4.2.21.1.1 **IF** necessary,
THEN use the "Container Markings" tab and associated fields to record information about the container (e.g., if the container is overpacked, note the overpack barcode number).

4.2.22 **IF** container was overpacked (30-gal drum into an 83-/85-gal drum, a 55-gal drum into a 110-gal drum, or container is a box),
THEN perform the following:

4.2.22.1 Select the overpack checkbox.

4.2.22.2 Confirm the correct AMWTP barcode number for the overpack.

4.2.22.3 Select the "Overpack" field
AND enter the confirmed overpack AMWTP barcode container ID.

4.2.22.4 Select the "Container Type" field
AND enter the appropriate container type.

4.2.22.5 Select the appropriate reason from the "Reason Code" field by pressing F9.

4.2.22.5.1 **IF** "Other" is selected in the "Reason Code" field,
THEN enter explanation in the "Reason" field.

4.2.23 **IF** container is commingled,
THEN ensure isolation ring and anti-stacking cone are placed on the container.

(EDF-0831, CWR 18, 20)

4.2.23.1 Update Container markings comment section with commingled data.

4.2.24 E-Sign the container record.

4.2.25 **IF** the container has a filter installed,
THEN perform the following:

4.2.25.1 **IF** a popup appears,
THEN select "Filter Screen."

4.2.25.2 **IF** a popup does **NOT** appear,
THEN go to GENERAL>Container Screen>Container Filters
AND enter the container ID into the container ID box
THEN press F8.

NOTE: *The NucFil-019SDS filter is recorded in WTS as the NF 19SD filter (this is the preferred filter for containers in retrieval).*

4.2.25.3 Click on the appropriate filter button
OR select from the "Other Filters" pull-down menu.

4.2.25.4 Select the "Insertion Event" from the drop-down menu.

4.2.25.5 Select "Insertion Box"
AND enter the date.

4.2.25.6 Press the E-SIGN & SAVE button.

4.2.25.7 **IF** a pop-up message appears (e.g., the date does not synchronize with the event, accept the date?),
THEN select the appropriate response.

4.2.25.8 E-Sign and Save.

4.2.26 **IF** container must be overpacked after it has been created,
THEN perform WTS overpack activities per Section 4.5.

4.2.27 **IF** any container data is entered incorrectly,
THEN perform the following:

4.2.27.1 Contact the SS for correction assistance.

4.2.27.2 SS: **IF** the error **CANNOT** be corrected,
THEN enter an NCR per MP-Q&SI 5.4, Identification of Nonconforming Conditions.

4.3 WTS Inspection Station for Legacy Non-Commingled Repackaged Waste

4.3.1 **IF NOT** already performed,
THEN log in to WTS as the ISO.

NOTE: *One box is equal to approximately eighteen 55-gal equivalent drums (conservative) in volume for air permit tracking.*

4.3.2 Ensure that the legacy source container has been created per Section 4.2.

4.3.2.1 Ensure that Form-2058 has been initiated to track all waste exposed events in the ICE/CCE, daily or per shift.

4.3.2.1.1 Ensure any non-completed waste exposed data from the previous shift is transferred to the current shift's Form-2058.

4.3.2.2 Notify the SS that waste exposed date/time section has been completed on Form-2058.

4.3.2.3 Notify the SS of the remaining drum equivalent for waste exposed.

4.3.3 Ensure the collection containers meet the following criteria:

- Container(s) is created per Section 4.2
- Container(s) type is an approved collection container that is 55-gal or larger listed in Appendix A
- Container(s) type meets criticality working requirements (CWRs).

(EDF-0831, CWR 22, 23)

4.3.3.1 Enter applicable comments in the form accessed by the "AMWTP Container" screen > "Cntr Markings" button (e.g., legacy source container ID into the child container CMS comments, date, dose rate).

NOTE: *The closure count represents the number of collection containers associated with the legacy source container.*

4.3.4 **WHEN** all collection containers have been created for the legacy source container**,**
THEN perform the following:

4.3.4.1 Complete Form-2058 for the legacy source container.

4.3.4.2 Enter applicable comments in the "AMWTP General Container" screen > "Container Markings" tab (e.g., legacy source container ID, date, dose rate).

4.3.4.3 Destroy the legacy source container barcode in WTS.

4.3.5 Notify SS of closure event.

4.4 WTS Inspection Station for Legacy Commingled Waste/Commingled Repackaged Waste

4.4.1 **IF NOT** already performed,
THEN log in to WTS as the ISO.

4.4.2 **IF** commingled container is retrievable,
GO TO Section 4.2 to create container
WITHOUT RETURNING TO this step.

NOTE: *One box is equal to approximately eighteen 55-gal drum equivalents (conservative) in volume for air permit tracking.*

4.4.3 Ensure that the legacy source container has been created per Section 4.2.

4.4.3.1 Ensure that Form-2058 has been initiated to track all waste exposed events in the ICE/CCE, daily or per shift.

4.4.3.1.1 Ensure any non-completed waste exposed data from the previous shift is transferred to the current shift's Form-2058.

4.4.3.2 Notify the SS that waste exposed date/time section has been completed on Form-2058.

4.4.3.3 Notify the SS of the remaining drum equivalents for waste exposed.

4.4.4 Ensure the isolation containers meet the following criteria:

- Container(s) is created per Section 4.2
- Container(s) type is an approved isolation container that is 55 gal or 83/85 gal
- Container(s) type meets CWRs.

(EDF-0831, CWR 13, 14, 18, 20)

4.4.5 **IF** an item is encountered that is too large to place into an isolation container,
THEN create an approved collection container per Section 4.2.

(EDF-0831; CWR 15)

4.4.5.1 Enter applicable comments in the form accessed by the "AMWTP Container" screen > "Cntr Markings" button (e.g., legacy source container ID, date, dose rate).

4.4.6 **WHEN** all containers have been created for the legacy source container**,**
THEN perform the following:

4.4.6.1 Complete Form-2058 for the legacy source container.

4.4.6.2 Enter applicable comments in the form accessed by the "AMWTP Container" screen > "Cntr Markings" button (e.g., children container ID, date, dose rate).

4.4.6.3 Destroy the legacy source container barcode in WTS.

4.5 WTS Inspection Station for Waste Container Overpacking

4.5.1 **IF** the inner container has **NOT** been created in WTS,
GO TO Section 4.2 to create the container;
THEN RETURN TO Step 4.5.2.

4.5.2 **IF** the container being overpacked is an isolation container,
THEN ensure the following:

- 3-ft spacing, in a planar array, is maintained between isolation containers
- 18 in. spacing between all other fissile material
- Limited to 55-gal volume of waste
- Only one isolation container has a collar removed at a time
- Isolation container is continuously attended during the time the collar is off
- The overpack isolation container shall have an anti-stacking cone attached upon lidding.

4.5.2.1 Ensure that collar and/or anti-stacking cone removal activities are **NOT** performed (other than overpacking, replacement, and decontamination) UNLESS written approval is provided by NCS staff.

(EDF-0831, CWR 13, 15, 18, 20, 21)

4.5.3 Ensure that the correct inner container barcode label has been attached to the correct overpack lid for drums.

4.5.4 Ensure that an inner barcode and container marking label are affixed to the top of the overpack lid (for drums)
OR write the inner container barcode number with container marking label affixed to the middle of the side of the box 3 ft from the bottom (for boxes).

4.5.5 Create empty overpack container by performing the following:

4.5.5.1 Create an empty overpack container by navigating to General>Container Screens>New Container, and selecting Empty Overpack from the menu.

4.5.5.2 Enter the AMWTP container barcode number into the "AMWTP Container ID" field.

4.5.5.3 Select the container type from the "Container Type" field.

4.5.5.3.1 **IF** container is a box,
THEN enter box dimensions, if necessary.

4.5.5.4 Select location from the "Location" field.

4.5.5.5 Enter comments regarding the overpacking event (i.e., inverted overpack, historical ID, inner barcode number) in the "Add Container Comment" field on the "Comments" tab.

4.5.5.6 E-sign and save.

4.5.6 Complete WTS overpacking process by performing the following:

4.5.6.1 Select the "General" tab,
THEN select "Overpack/Unpack" from the menu.

4.5.6.2 Select "Overpack" from the drop down menu for the operation field.

4.5.6.3 Select the appropriate reason from the "Overpack Reason" field by pressing F9.

4.5.6.3.1 **IF** "Other" is selected in the "Overpack Reason" menu into the "Reason Comments" field,
THEN enter explanation.

4.5.6.4 Using a barcode scanner, scan the overpack AMWTP barcode number into the "Parent ID" field.

4.5.6.4.1 Press TAB button.

4.5.6.5 Place cursor in the "Child Container" ID field.

NOTE: *The parent container will be required to be in the same WTS location that the overpack will be performed.*

4.5.6.6 Ensure the parent container is in the same WTS location that the overpack will be performed
AND click "Yes."

4.5.6.7 **IF** container is a drum,
THEN use a barcode scanner and scan the child container ID(s) into the "Child Container ID" fields.

4.5.6.8 **IF** container is a box,
THEN manually enter the child container ID(s) into the "Child Container ID" fields.

4.5.6.8.1 2nd OT: Check WTS that the child container ID that was manually entered is the correct child container ID.

4.5.6.9 Click E-sign button,
THEN click the "FILTER SCREEN" button.

NOTE: *The NucFil019SDS filter is recorded in WTS as the NF192D filter (this is the preferred filter for overpacks).*

4.5.6.10 Click on the appropriate filter button
OR select from "Other Filters" pull-down menu.

4.5.6.11 Select the "insertion event" from the drop-down menu.

4.5.6.12 Select "insertion date box"
AND enter the date.

4.5.6.13 Press the E-SIGN & SAVE button
AND E-SIGN & SAVE.

NOTE: *Once E-SIGN & SAVE is complete for the filter screen, WTS will return to "Inspection Station" screen for a final E-SIGN & SAVE.*

4.5.6.14 E-sign and save.

4.5.7 **IF** an AMWTP container record data is entered incorrectly,
THEN perform the following:

4.5.7.1 Contact the SS for correction assistance.

4.5.7.2 SS**: IF** the error **CANNOT** be corrected,
THEN enter an NCR as trained per MP-Q&SI-5.4.

4.6 Container Creation for Cargo Unpacking

NOTE: *The ISO performs this section unless otherwise indicated.*

4.6.1 ISO or OT: Retrieve as much information as possible from the waste container.

(HWMA/RCRA Permit; HWMA/RCRA TSA IS Document)

4.6.2 Confirm the correct AMWTP barcode number for the target container to be created.

4.6.2.1 **IF** the container is an isolation or collection container, **THEN** attach barcode label(s) to the container per Appendix A.

NOTE: *The preferred method for entering barcode numbers is the barcode scanner.*

4.6.3 Select the "AMWTP Container ID" field and enter the confirmed AMWTP barcode container ID.

NOTE 1: *The following container types may be selected when creating legacy source containers during CCE repackaging operations:*

- *Legacy (LC30)*
- *Legacy (LC55)*
- *Legacy (LC83)*
- *LCBOX.*

NOTE 2: *The following container types may be selected for single drum creation of overpacked containers:*

- New 85 (7A85)
- Reused 85 (RC85)
- New 55 (425)
- New 110 (110).

4.6.4 Select the "Container Type" field and enter the appropriate container type.

4.6.5 Select the "Waste Type" field and enter the waste type of the container.

4.6.6 **IF** necessary,
THEN select "Location" field and enter container creation area.

4.6.6.1 **IF** the container is an isolation/collection container,
GO TO Step 4.6.12 to enter retrieval information
WITHOUT RETURNING TO this step.

NOTE 1: *"AK/OP Recommended IDC" field is located in the "Container Markings" tab when assigning IDCs.*

NOTE 2: *In the following steps, an example of commingled would be absorbent from one container entering the breach of another container.*

4.6.7 **IF** the container is considered commingled,
THEN recommend IDC SD-179
AND document ALL information (label color, associated containers, historical data, etc.) for the container in the "Container Markings" tab.

4.6.8 Enter the available data in the "Historical ID" field;
THEN press F9.

4.6.8.1 **IF** there is matching historical data in WTS that has **NOT** been assigned to another AMWTP container,
THEN ensure information retrieved from the container matches the information entered into WTS, and is consistent with the WTS response.

4.6.8.2 **IF** entering partial historical information,
THEN perform the following:

4.6.8.2.1 Enter the % sign before and after the partial historical information entry.

4.6.8.2.2 Press F9 to display all of the potentially matching numbers.

4.6.8.2.2.1 **IF** any of the following situations occur:

- No historical information populates
- The message "Container not found" is displayed
- The container information is incomplete
- The container information is unreadable
- The container is **NOT** labeled,

THEN enter all of the available information into the "Container Markings" tab.

4.6.8.3 **IF** no Historical ID populates,
THEN enter all historical markings into the "Container Markings" tab.

4.6.9 **IF** there is no Historical ID available, but a Historical IDC is available on a Historical Traveler or written on the container,
THEN recommend the appropriate IDC from Appendix E that corresponds with the Historical IDC.

4.6.10 **IF** the Historical ID and/or the Historical IDC is **NOT** legible or available, but the waste description is documented on a historical traveler or on the container,
THEN recommend the appropriate IDC from Appendix E that corresponds with the waste description.

4.6.11 **IF** there are no container markings,
THEN enter "SD-179" for the IDC in the "AK/OP Recommended IDC" field located in the "Container Marking" tab.

4.6.12 Ensure "Container Type" field matches the container being created.

4.6.13 **IF** container should **NOT** be vertically unpacked (i.e., container wrapped in herculite, poor integrity, invert overpacked, contains repackaged materials, etc.),
THEN check the "No Vertical Unpack" box.

4.6.14 Select the "Retrieval Area" field
AND enter the retrieval area and cell.

NOTE: *If historical weight is populated, then that weight is retained.*

4.6.15 Select "Container Weight" field
AND enter the weight.

4.6.15.1 **IF** creating an inner container,
THEN subtract empty overpack weight from scale weight.

4.6.15.2 **IF** weight is **NOT** available,
THEN enter default weight of 1 lb.

4.6.16 **IF** container is a box,
THEN select the "Box Dimensions" field
AND enter box dimensions.

4.6.17 **IF** container is a bulged drum,
THEN select "Yes" in the "Bulged/venting Required" drop-down pick list.

4.6.18 **IF** container is **NOT** a bulged drum,
THEN select "No" in the "Bulged/venting Required" drop-down pick list.

4.6.19 Enter the dose rates in the appropriate fields.

4.6.19.1 **IF** dose rates are **NOT** available,
THEN use the populated default values.

4.6.20 Select the "Historical ID" tab and locate the "^{239}Pu FGE," if available, **AND** check that the value is ≤200 FGE for drums **OR** ≤325 FGE for boxes.

4.6.20.1 **IF** the historical FGE value is >200 FGE but ≤380 FGE for drums **OR** >325 FGE but <380 FGE for boxes, **THEN** affix "FGE>WAC" label to container(s).

(EDF-0034, CWR 7.3.2)

4.6.20.2 **IF** container is >380 FGE, **THEN** perform the following:

4.6.20.2.1 Suspend operations.

4.6.20.2.2 Notify the SS.

4.6.20.2.3 SS: Notify PSM.

(EDF-0831, CWR 24)

NOTE 1: *The visual classification of 5 is used only for legacy repackaging.*

NOTE 2: *Visual classification is for container being created in WTS. Inner container visual classification should be entered in "Container Markings" comments.*

4.6.21 Select the "Visual Classification" tab; **THEN** enter the visual class of the container.

4.6.21.1 Ensure each field is filled out with the applicable information.

4.6.21.2 **IF** necessary, **THEN** u**se** the "Container Markings" tab and associated fields to record information about the container (e.g., if the container is overpacked, note the overpack barcode number).

4.6.22 Select the "Receipt/Retrieval" tab; **THEN** select "Unpack" and enter confirmed cargo container barcode number.

4.6.23 **IF** container was overpacked (30-gal drum into an 83-/85-gal drum, or a 55-gal drum into a 110-gal drum),
THEN perform the following:

4.6.23.1 Select the "overpack" checkbox.

4.6.23.2 Confirm the correct AMWTP barcode number for the overpack.

4.6.23.3 Select the "Overpack" field
AND enter the confirmed overpack AMWTP barcode container ID.

4.6.23.4 Select the "Container Type" field
AND enter the appropriate container type.

4.6.23.5 Select the appropriate reason from the "Reason Code" field by pressing F9.

4.6.23.5.1 **IF** "Other" is selected in the "Reason Code" field,
THEN enter explanation in the "Reason" field.

4.6.24 **IF** container is commingled,
THEN ensure isolation ring and anti-stacking cone are placed on the container.

(EDF-0831, CWR 18, 20)

4.6.24.1 Update "Container Markings" comment section with commingled data.

4.6.25 E-Sign the container record.

4.6.26 **IF** container has a filter installed,
THEN perform the following:

4.6.26.1 **IF** a popup appears,
THEN select "Filter Screen."

4.6.26.2 **IF** a popup does **NOT** appear,
THEN go to GENERAL>Container Screens>Container Filters
AND enter the container ID into the container ID box
THEN press F8.

NOTE: *The NucFil019SDS filter is recorded in WTS as the NF19SD filter (this is the preferred filter for containers in retrieval).*

4.6.26.3 Click on the appropriate filter button
OR select from the "Other Filters" pull-down menu.

4.6.26.4 Select the "Insertion Event" from the drop-down menu.

4.6.26.5 Select **"**Insertion Box"
AND enter the date.

4.6.26.6 Press the E-SIGN & SAVE button.

4.6.26.7 **IF** a pop-up message appears (e.g., **"**The date does not synchronize with the event, accept the date?"),
THEN select the appropriate response.

4.6.26.8 E-Sign and Save.

4.6.27 **IF** container must be overpacked after it has been created,
THEN perform WTS overpack activities per Section 4.5.

4.6.28 **IF** any container data is entered incorrectly,
THEN perform the following:

4.6.28.1 Contact the SS for correction assistance.

4.6.29 SS: **IF** the error **CANNOT** be corrected,
THEN enter an NCR per MP-Q&SI 5.4.

4.6.30 **IF** cargo container is completely empty,
THEN notify SS that the cargo container is ready for closure.

4.6.30.1 Per direction of SS, **GO TO** Section 4.7, Cargo Closure, to close the container
WITHOUT RETURNING TO this step.

4.7 Cargo Closure

NOTE: *This section is to specifically inactivate and destroy a* RCRA-empty *(see def.) cargo container in the WTS.*

4.7.1 Notify WTS support that closure of the cargo container is ready to be started.

4.7.1.1 **IF** WTS support is **NOT** available or ready for the cargo container closure,
THEN notify the SS and log in applicable log
AND suspend operations until WTS support is available/ready.

4.7.2 Ensure that the cargo container has no visible waste.

4.7.3 Go to the General tab click
AND select the Overpack/Unpack from the menu.

4.7.4 In the Operations field click the drop-down button
AND select Unpack.

4.7.5 Enter the cargo container barcode ID into the Parent ID field.

4.7.6 Click in the Historical ID box to populate the Historical information for the Cargo container that is to be closed.

4.7.7 Ensure that the number of containers listed in the Child Container ID field have been unpacked from the cargo and are equal to the number of containers logged on the Form-2059.

4.7.7.1 **IF** the number is **NOT** equal,
THEN notify the SS.

4.7.8 E-sign and Save.

4.7.9 Notify WTS support that container has been closed in WTS and needs data updated for shipping requirements.

4.8 ContainerActivities for Waste Storage

NOTE 1: *Both the ISO and the OT can perform this section.*

NOTE 2: *Steps 4.8.1 through 4.8.11 may be performed simultaneously.*

4.8.1 **IF** the container is a drum,
THEN write the weight on the lid of the drum.

4.8.2 **IF** the container is a box,
THEN write the weight on the sides of the box.

4.8.3 **IF** the container being labeled is a box weighing 4,000 lb or more,
THEN affix a "> 4,000 lb" label to each side of the box.

4.8.4 **IF** the container being labeled is a drum weight 700 lb or more,
THEN affix three ">700 lb" labels to the drum.

NOTE: *The barcode label is used to identify a container and its contents.*

(HWMA/RCRA TSA Document)

4.8.5 Ensure container(s) is labeled in accordance with Appendix A and INST-RS&C-6.6.2, Radiological Labeling.

(EDF-0034, CWR 7.3.2; HWMA/RCRA Permit)
(40 CFR 761; EDF-0831, CWR 24)

4.8.6 Ensure PCB labels (see Exhibit 1, Label Examples) are affixed to container if identified in WTS as a PCB drum
OR with **ONE** of the following IDCs:

- RF-003/RF-743
- BN-501 (PCB soil)
- BN-511 (PCB sludge or solids)
- BN-523 (PCB debris).

4.8.7 Ensure that containers that are found with a combined (gamma and neutron) total dose rate of 40 mrem or greater on contact have two elevated dose rate labels applied on opposite sides of the container before export from the RCE export airlock.

NOTE: *Individual containers that have an external radiation dose equivalent rate of >200 mrem/hr at the surface are segregated or overpacked.*

4.8.7.1 **IF** the combined (gamma and neutron) total dose rate of a container is >200 mrem/hr,
THEN suspend operations
AND notify the SS.

NOTE: *Containers with unknown contents are labeled with the words "Hazardous Waste," a barcode label, and IDC BN-180 for containers from the RCE and SD-179 for containers from the CCE. If no label is present, a barcode and hazardous waste label is affixed at a minimum.*

(HWMA/RCRA Permit; HWMA/RCRA TSA IS Document)

4.8.8 **IF** the historical IDC is available,
THEN write the historical IDC on sides of container (three locations around the circumference of the drum or one on each side of a box).

4.8.9 **IF** the historical information **CANNOT** be identified or created in WTS,
THEN mark IDC BN-180 (for RCE containers) or SD-179 (for CCE containers) on sides of container (three locations around the circumference of the drum or one on each side of a box).

4.8.10 **IF** the container is a drum,
THEN perform the following, if **NOT** already completed:

NOTE: *The Waldon drum handler is unable to grip some of the deformed/out-of-round drums due to its inability to maintain surface contact on the gripper arms.*

4.8.10.1 **IF** drums are deformed or out-of-round,
THEN use the Dent-o-meter to gauge the roundness of the drum.

(EDF-0075)

4.8.10.2 **IF** the gap between the side of the drum and the Dent-o-meter is 1/2 in. or more,
THEN place two "Parrot Beak Handler Only" labels, on opposing sides of container, between the center rolling hoop.

(EDF-0075)

4.8.11 Ensure the following:

- Container is torqued per Appendix B, Torque Value Reference Table, if applicable
- Form-1625, M&TE Usage Report, is completed, if applicable
- The drum is signed, dated, and a Torque Verified sticker is applied near the locking bolt.

4.8.12 Verify that all AMWTP barcode label identification numbers on the container are identical (does **NOT** apply to Inner Child labels).

NOTE: *On the barcode application display, barcode cells highlighted GREEN indicate that the barcode numbers match. A cell highlighted RED indicates a barcode number that does not match previous barcode number(s).*

4.8.12.1 Starting at the seam on drums, or one side for boxes, and working around the container back to the seam or side, use the bar code compare application on hand-held barcode scanner to scan all barcode labels to verify that all the barcode labels match as indicated by GREEN entries on the application.

4.8.12.1.1 **IF** labels do **NOT** match as indicated by a RED entry on the application**,**
THEN immediately contact the SS.

4.8.12.1.1.1 SS or Designee:
IMMEDIATELY **GO TO** Step 4.12.11 to create an NCR **WITHOUT RETURNING TO** this step.

4.8.12.2 Document verification on Form-2165.

4.8.13 **IF** the container is an isolation container,
THEN ensure that an anti-stacking cone is placed on top of the lid
AND a drum collar is installed.

(EDF-0831, CWR 18, 20)

4.8.14 Do **NOT** perform any collar removal activity other than overpacking, collar replacement, or decontamination, UNLESS approved by NCS staff.

(EDF-0831, CWR 21)

4.8.15 **IF** container is an isolation/collection container(s),
THEN select the AMWTP Container Screen and enter updated container information in the "Container Markings Comments" field.

4.8.15.1 ISO: Ensure the following:

- All barcodes placed on container have the same number on them
  AND they match the WTS entry
- Weight has been entered in the WTS Container Markings Tab in the "Container Markings Comments" field for each container being exported
- Radiological dose rates have been entered in the WTS Container Markings in the "Container Markings Comments" field for each container being exported.

4.9 Storage Requirements for the RCE Export Airlock, RCE, ICE, and CCE

NOTE: *This section applies to containers that have already been retrieved or repackaged.*

4.9.1 Store retrieved container in a received waste storage area, located on any portion of the asphalt pad, which has been cleared and designated for usage as a storage area.

(HWMA/RCRA Permit; HWMA/RCRA TSA IS Document)

4.9.2 Ensure that waste containers are **NOT** placed off of the asphalt pad on the dirt **UNLESS** the container is a low-level waste container.

(HWMA/RCRA TSA IS Document)

4.9.3 Ensure IDC IW-179 is stored separate from all other IDCs.

(HWMA/RCRA TSA IS Document)

4.9.4 Ensure IDC RF-998 is stored separate from all other IDCs.

(HWMA/RCRA TSA IS Document)

NOTE: *IDCs RF-999 and RF-751 may be stored together.*

4.9.5 Ensure that IDCs RF-999 and RF-751 are stored separate from all other IDCs.

(HWMA/RCRA TSA IS Document)

NOTE: *Appendix C, provides waste type and general description information.*

4.9.6 Provide segregation/separation of incompatible IDCs per the following table:

NOTE: *In the following table, "NO" applies to the restricted waste type.*

Waste Type Storage Restrictions	**Liquids Identified <5 Gallons**	**Liquids Identified ≥5 Gallons**
Acids	NO Halogenated Organics	NO Halogenated Organics NO Caustics
Oxidizers	NO Halogenated Organics	NO Halogenated Organics
Caustics	N/A	NO Acids
Halogenated Organics	NO Acids NO Oxidizers	NO Acids NO Oxidizer

(HWMA/RCRA TSA IS Document; HWMA/RCRA Permit)

4.9.7 Store all potential pyrophoric materials in a designated potential pyrophoric materials storage area, as designated by a nuclear facility manager, per the following:

(HWMA/RCRA Permit; HWMA/RCRA TSA IS Document)

NOTE: *Fire retardant plywood is not considered a combustible material*.

- Farther than 3 ft away from a row of containers containing combustible material (e.g., a container made of plywood, cardboard, fiberglass reinforced plywood)
- Farther than 10 ft away from other combustible materials, such as operational supplies (this does not include non-fire retardant plywood when used as a spacer in the storage array).

(HWMA/RCRA Permit; HWMA/RCRA TSA IS Document)

4.9.7.1 SS: Notify the PSM prior to moving potential pyrophoric materials.

4.9.7.2 SS: Notify the PSM of the location of each row containing potential pyrophoric materials.

4.9.7.2.1 PSM: Notify the INL Fire Department of the location of each row containing potential pyrophoric materials.

(HWMA/RCRA Permit; HWMA/RCRA TSA IS Document)

NOTE: *Spill pallets are an acceptable means of segregation.*

4.9.8 Store bulged drums on spill pallets planar array no more than two containers wide and no more than 50 containers long.

4.10 End of Shift Activities

4.10.1 Ensure end of shift communication with the SS includes the following:

- RCRA Permit limit count for the day
- Air Permit limit count for the day
- Barcode numbers of containers that will remain "waste exposed" over night
- Bulged container count and oldest bulged container storage in TSA-RE.

4.10.2 SS: Ensure Forms-1625, -2058, -2059, and the applicable operator logs are complete.

4.11 Post-Job Review

4.11.1 SS: Perform a post-job review in accordance with MP-COPS-9.17.

4.12 Abnormal and Infrequent Operations

4.12.1 **GO TO** the appropriate section from the following table according to task being performed,
THEN RETURN to this step, if further activities will be performed:

Task	Section
Free-Fossil Fuel Spill	4.12.2
Loss of WMF-636 Ventilation	4.12.3
Retrieval Contamination Enclosure Ventilation Loss	4.12.4
Continuous Air Monitor Alarm in the Affected Area	4.12.5
Loss of Commercial Power	4.12.6
Elevated Volatile Organic Compound Levels	4.12.7
Dropped, Mishandled, and/or Breached/Leaking/Spilled Waste Container	4.12.8
Moisture/Oil Residue on the Waste Drum	4.12.9
Bulging Waste Container	4.12.10
Mismatched AMWTP Barcode Label Identification Numbers on Waste Container or More than One Container with the Same Barcode Label Identification Number	4.12.11

4.12.2 Free-Fossil Fuel Spill

4.12.2.1 **IF** a spill of *free-fossil fuel* (see def.) is found to be present in the TSA-RE, including the RCE and ICE,
THEN respond per INST-OI-88.

4.12.3 Loss of WMF-636 Ventilation

4.12.3.1 Suspend WMF-636 operations.

4.12.3.2 Notify SS.

4.12.3.3 SS: Notify RCSS, IS/IH, PSM, and Environmental.

4.12.3.3.1 **IF** abnormal event occurs outside of support organization shift hours (4 ×10),
THEN notify Environmental at the start of the next business day OR via email.

(WMF-636 PTC)

4.12.3.4 Proceed at the direction of the SS.

4.12.4 Retrieval Contamination Enclosure Ventilation Loss

4.12.4.1 Suspend all retrieval activities.

4.12.4.2 Notify SS.

4.12.4.3 SS: Notify RCSS, IS/IH, PSM, and Environmental.

4.12.4.3.1 **IF** abnormal event occurs outside of support organization shift hours (4 × 10),
THEN notify Environmental at the start of next business day or via email.

(WMF-636 PTC)

4.12.4.4 RCSS: **IF** an airborne radioactivity area was present
OR there are unknown radiological conditions,
THEN ensure CAMs continue to monitor the vicinity of the RCE.

4.12.4.5 SS, IS/IH, and RCSS: Based on conditions present, evaluate for personnel evacuation.

4.12.4.5.1 SS: **IF** conditions warrant,
THEN evacuate personnel.

4.12.4.5.2 SS: Notify the PSM.

4.12.4.6 Attempt restart per INST-OI-30.

4.12.4.6.1 SS: **IF** RCE ventilation **CANNOT** be restarted,
THEN ensure TSA-RE ventilation is secured.

4.12.4.6.2 SS: Notify the PSM.

4.12.5 Continuous Air Monitor Alarm in the Affected Area

4.12.5.1 **IF** a CAM alarms in the TSA-RE
OR the RCE without RCE ventilation operating
OR any RCE airlock,
THEN perform the following:

4.12.5.1.1 All Personnel: Place equipment and processes in a stable configuration.

4.12.5.1.2 Personnel in Supplied Breathing Air (SBA): Stand by for instruction.

4.12.5.1.3 All Others: Exit the TSA-RE.

4.12.5.1.4 Guard or post the area to prevent re-entry.

4.12.5.1.5 Notify the SS.

4.12.5.1.6 SS: Notify the PSM and RCSS.

4.12.5.2 **IF** a CAM alarms in RCE with RCE ventilation operating,
THEN perform the following:

4.12.5.2.1 All Personnel in the RCE: Place equipment and processes in a stable configuration.

4.12.5.2.2 Personnel in SBA: Stand by for instruction.

4.12.5.2.3 All Others: Exit the RCE per RCT direction.

4.12.5.2.4 Guard or post the area to prevent re-entry.

4.12.5.2.5 Notify SS.

4.12.5.2.6 SS: Notify the PSM and RCSS.

4.12.6 Loss of Commercial Power

4.12.6.1 Place the equipment in a stable configuration
AND suspend operations.

4.12.6.2 Personnel in SBA: Perform expedited egress per RCT direction.

4.12.6.3 Personnel in Powered Air Purifying Respirator: Perform controlled egress per RCT direction.

4.12.6.4 ALL Personnel in TSA-RE: Evacuate TSA-RE **AND** stand by for radiological surveys.

4.12.6.5 Post guards to prevent entry into the TSA-RE.

4.12.6.6 Notify the SS.

4.12.6.7 SS: Notify RCSS, IS/IH, Environmental, and PSM.

4.12.6.8 Proceed at the direction of the SS.

4.12.7 Elevated Volatile Organic Compound Levels

4.12.7.1 **IF** VOC levels are sustained in the breathing zone at 5 ppm, or greater, for 2 minutes,
THEN perform the following:

4.12.7.1.1 Suspend operations.

4.12.7.1.2 Exit the RCE export airlock.

4.12.7.1.2.1 For all other areas other than the RCE export airlock, maintain a minimum 30-ft boundary.

4.12.7.1.3 Notify the SS.

4.12.7.1.4 SS: Notify the RCSS, PSM, and IS/IH.

4.12.7.1.5 IS/IH: Perform further characterization of the VOCs.

4.12.7.1.6 Proceed at the direction of IS/IH.

4.12.8 Dropped, Mishandled, and/or Breached/Leaking/Spilled Waste Container

4.12.8.1 Suspend all waste handling operations in the vicinity of the container.

4.12.8.2 **IF** container is in the RCE export airlock,
THEN evacuate the RCE export airlock.

NOTE: *Crystals on the side of a waste container are considered "waste."*

4.12.8.3 **IF** container is located at the CCE,
THEN perform one of the following:

4.12.8.3.1 **IF t**he breach is less than 2 in. (approximately the size of a silver dollar)
AND no waste is visible,
THEN leave the affected area
AND maintain at least a 25-ft radius/boundary.

4.12.8.3.2 **IF** the breach is larger than 2 in.
OR waste is visible,
THEN exit to the next physical barrier.

4.12.8.4 Notify the SS.

4.12.8.5 SS: Notify PSM, RCSS, and IS/IH.

4.12.8.6 RCSS and IS/IH: Evaluate conditions
AND respond per MP-RS&C-6.12 and INST-OI-88, if necessary.

4.12.8.7 **IF** removal of containers is necessary to recover the container or any spillage,
THEN resume waste handling operations in the affected area to support recovery, as directed by the SS.

4.12.8.7.1 **IF** the spilled material is from a single container,
THEN package the spilled material and the waste container in an overpack container.

(EDF-0831, CWR 22, 23)

4.12.8.7.2 **IF** the waste is commingled,
THEN package into an isolation container.

(EDF-0831, CWR 13, 14)

4.12.8.7.3 **IF** cleanup from a spill/leak from a waste container **CANNOT** be completed by the end of shift,
THEN perform the following:

4.12.8.7.3.1 SS: Notify the PSM.

4.12.8.7.3.2 Notify Environmental staff.

4.12.8.8 **IF** container was dropped or mishandled,
THEN perform an evaluation of the dropped/mishandled container per the following:

- Does the container have significant surface defects, such as extensive corrosion, cracks, or bowing?
- Is there evidence that the container is or has been pressurized, bulged, or concave?
- Are there any split seams, tears, obvious holes, punctures (of any size), creases, broken welds, discoloration, or cracks?
- Is there evidence of loose closure hardware?
- Is the load bearing capacity suspect?

(HWMA/RCRA TSA IS Document; HWMA/RCRA Permit)

4.12.8.8.1 SS: **IF** any of the above-conditions are found, **THEN** ensure that the container is overpacked per Section 4.5, and repaired, processed, or labeled, as necessary, per INST-OI-84, Waste Container Repair and Overpack.

4.12.8.8.2 Recover the dropped/mishandled container at the direction of the SS.

4.12.8.9 SS: **IF** the waste container was breached/leaking/spilled, **THEN** notify the Environmental Compliance and Waste Services manager or the Environmental on-call person of the breach/leaking/spill.

4.12.9 Moisture/Oil Residue on the Waste Drum

4.12.9.1 Suspend retrieval operations in the immediate area.

4.12.9.2 Notify SS.

4.12.9.3 SS: Contact IS/IH, PSM, and the RCSS.

4.12.9.4 Follow IS/IH instructions with concurrence from the SS and RCSS.

4.12.10 Bulging Waste Container

4.12.10.1 Place equipment in a stable configuration.

4.12.10.2 Suspend all waste handling operations in the vicinity of the container.

4.12.10.3 Warn others in the area.

4.12.10.4 Evacuate personnel a minimum of 30-ft radius/boundary.

4.12.10.5 Notify the SS, RCSS, PSM, and IS/IH.

4.12.10.6 Attempt to determine the contents of the drum by means of the WTS barcode number (if available) and any other pertinent information (from labels, etc.) that can be used to plan remedial actions.

4.12.10.7 IS/IH: Perform thermographic screen of suspect container **AND** direct operations of appropriate actions.

4.12.10.8 RCT and IS/IH**:** With RCSS, IS/IH, and SS approval, characterize the drum for VOCs and contamination.

4.12.10.8.1 **IF** VOC levels are elevated,
GO TO Step 4.12.7 to perform steps for elevated VOCs;
THEN RETURN TO Step 4.12.10.9.

4.12.10.9 SS, RCSS and IS/IH: Evaluate the results of surveys.

4.12.10.10 **WHEN** container is in accessible condition
AND/**OR** ready to move,
THEN ensure a lid restraint device is applied to container.

4.12.10.11 **IF** the drum is bulged such that it **CANNOT** be handled using a parrot beak attachment,
THEN move the drum using approved lid restraints and/or lifting device.

4.12.10.12 Segregate bulged waste container from other containers ensuring container is placed in secondary containment until container can be vented.

(HWMA/RCRA Permit; HWMA/RCRA TSA IS Document)

4.12.10.13 SS: **IF** recovery **CANNOT** be completed by the end of shift,
THEN notify the PSM and Environmental.

4.12.11 Mismatched AMWTP Barcode Label Identification Numbers on Waste Container or More than One Container with the Same Barcode Label Identification Number

4.12.11.1 SS or Designee: Immediately generate an NCR against all affected barcode numbers per MP Q&SI-5.4
AND attach an NCR tag to the container.

(RPT-TSR-03, LCO 3.6)

NOTE: *Items being included in the NCR disposition are not to be performed by the SS or designee at this time*.

4.12.11.1.1 **WHEN** writing the NCR,
THEN include the following in the "Disposition Description or CAP" block of the NCR:

- Use available information (move sheets, historical information, etc.) to determine barcode number of the container.
- Record any historical information available on the WTS container screen.
- Historical ID number from container will be removed by AK personnel or via SDCR prior to inactivating the container/barcode numbers in WTS.
- Inactivate the container/barcode numbers in WTS.
- Recreate the container in WTS with a new barcode number using the historical information noted above.
- Disposition WILL **NOT** be implemented until QA concurrence is received.

5.0 DEFINITIONS

Breached. Any physical degradation in the structural soundness of a container that could potentially lead to a *release* (see def.) of waste and/or contamination. A breach is a hole in the container that can lead to leaks, spills, or releases. In the case of the air permit, if the waste can be viewed through the hole and a liner/bag is not intact/present, or if the hole is small (e.g., pinhole) that can't be visually looked through, and there is contamination found during characterization of the hole, then the container is breached.

Characterization. A process of determining and documenting all pertinent constituents with their physical, radiological, and chemical characteristics, as well as the applicable Hazardous Waste Management Act (HWMA)/RCRA waste codes from 40 CFR 261, Identification and Listing of Hazardous Waste. The process of identifying waste composition and properties using acceptable knowledge, nondestructive examination, nondestructive assay, intrusive visual examination, and/or sampling and analysis, to comply with applicable storage, treatment, handling, transportation, and disposal requirements.

Collection container. A nominal 55-gal drum or container of any other size (e.g., a nominal waste box) provided that the footprint of the container is at least the same surface area as a nominal 55-gal drum.

Commingled waste. Uncontained debris/waste that has come into physical contact with uncontained debris originating from another ruptured/breached container. Commingled debris/waste may also include uncontained waste from a single ruptured waste stack container that has subsequently intermixed with soil that previously surrounded the ruptured waste stack container.

Free-fossil fuel. Diesel fuel or gasoline in portable storage or fuel transport containers (e.g., gas cans, drums, vessels) or spilled diesel fuel or gasoline from portable storage or fuel transport trailers. Fossil fuel in vehicle or equipment fuel tanks or in the RCE diesel fueling system is not free fossil fuel.

Isolation container. A maximum of 55 gallons of waste in a 55-gal or larger container equipped with a spacing device (collar) and an anti-stacking device to ensure safe (analyzed) isolation from other isolation containers.

Leak. Waste that has discharged, escaped, leached, etc., out of its container and remains on the container. For example, material from inside the container that has not left the container surface to contaminate any other surface.

Legacy noncommingled repackaged waste. Packaged waste originating from a singular source container in which the original configuration of the waste has been altered.

Legacy commingled repackaged waste. Repackaged waste originating from multiple sources in which the original configuration of the waste has been altered; escaped debris/waste that has come into physical contact with debris originating from another container.

Legacy source container. Waste container, located in the retrieval stack, in which the repackaged waste originates from.

RCRA-empty. A drum or box that has held hazardous waste, except a waste that is a compressed gas or that is identified as an acute hazardous waste, can only be considered empty if the following hold true:

1. All waste has been removed that can be removed using the practices commonly employed to remove materials from that type of drum (e.g., pouring, pumping, and aspirating)

   AND

   A. No more than 2.5 cm (1 in.) of residue remain on the bottom of the drum or box.

   B. No more than 3% by weight of the total capacity of the drum remains in the drum or inner liner if the drum is less than or equal to 110 gal in size

2. No more than 0.3% by weight of the total capacity of the drum remains in the drum or box if the container is greater than 110 gal in size.

The drum or box has not contained an acute hazardous waste (P code). Drum or box must meet the definition of a container and must be capable of holding 75% of the original volume.

Release. Any identifiable waste that has spilled, leaked, poured, emitted, emptied, discharged, injected, pumped, escaped, leached, dumped or disposed of into environment media and is not contained by permitted secondary containment, or other permitted engineering controls; for example airborne radiological contamination inside of a Type II module, or waste spilled onto the road between buildings.

Spill. When RCE ventilation is running, a spill is waste, including packaged waste (e.g., polybags or bottles), that has discharged, escaped, emptied, leached, etc., out of its container in any quantity and has contacted other surfaces. Waste that is inside the ICE, when ICE is functioning as a containment, is not considered a spill. An as-found condition in the waste stack is also NOT considered a spill. When RCE ventilation is NOT running, a spill is defined and responded to per INST-OI-88.

Waste exposed status. For the purposes of WTS, RCRA and air permit limit tracking, term used in this instruction to identify when waste in the stack is exposed and ready to be repackaged inside the ICE.

6.0 REFERENCES

(1) 40 CFR 261, Identification and Listing of Hazardous Waste

(2) 40 CFR 761, Polychlorinated Biphenyls (PCBs) Manufacturing, Processing, Distribution in Commerce and use Prohibition

(3) 40 CFR 761.79, Decontamination Standards and Procedures

(4) AMWTP-5232-PTC-02, Application To Construct An Air Pollution Emitting Facility: The Transuranic Storage Area – Retrieval Enclosure

(5) AMWTP HWMA/RCRA Permit

(6) EDF-0034, Criticality Safety Analysis for TRU Waste Storage

(7) EDF-0075, Handling of Deformed Drums During Retrieval

(8) EDF-0084, Drum Integrity Evaluation Options Analysis

(9) EDF-0496, ALARA Job Review (AJR) - RCE/ICE Retrieval Operations

(10) EDF-0831, Criticality Safety Evaluation for TSA-RE Retrieval Operations

(11) HA-N-072, Hazard Assessment for INST-OI-100

(12) HA-N-073, Hazard Assessment for INST-OI-101

(13) HWMA/RCRA TSA Interim Status Documents/Part A Permit

(14) IDAPA-58.01.01, Clean Air Act

(15) IH-EA-027, Retrieval Enclosure Waste Container Extraction Operations

(16) IH-EA-028, Inner Containment Enclosure Waste Container Extraction Operations

(17) INST-OI-11, Waste Container Handling

(18) INST-OI-24, Packaging Radioactive Waste

(19) INST-OI-30, WMF-636, Ventilation Systems, Maxi-Heater, and VAC-PAC Operations

(20) INST-OI-84, Waste Container Repair and Overpack

(21) INST-OI-88, Spill/Leak Response and Cleanup

(22) INST-OI-98, Packaging Non-Radioactive Waste

(23) IINST-RS&C-6.6.2, Radiological Labeling

(24) MP-CMNT-10.8, Hoisting and Rigging

(25) MP-COPS-9.17, Performing Pre-Job Briefs and Post-Job Reviews

(26) MP-DOCS-18.2, Records Management

(27) MP-Q&SI-5.4, Identification of Nonconforming Conditions

(28) MP-RS&C-6.12, Response to Abnormal Radiological Conditions

(29) RPT-ESH-049, Hydrogen Deflagration Mitigation Process

(30) RPT-TSR-03, Technical Safety Requirements

(31) Toxic Substance Control Act

7.0 RECORDS

Records generated by this procedure are classified in accordance with the table below and dispositioned in accordance with MP-DOCS-18.2, Records Management.

Record Description	Classification
INST-OI-09, Case File	Nonpermanent WIPP/ENV1-J-1/Destroy 75 years after submittal
Form-1625, M&TE Usage Report	Facility Operating Record/ENV2-a-1-a/Destroy 5 years after Life of Facility
Form-2058, Retrieval ICE/CCE Daily Air Permit Tracking Sheet	Facility Operating Record/ENV2-a-1-a/Destroy 5 years after Life of Facility
Form-2059, Retrieval RCE Daily Air Permit Tracking Sheet	Facility Operating Record/ENV2-a-1-a/Destroy 5 years after Life of Facility
Form-2093, RCE Control Room Operator Log	Facility Operating Record/ENV2-a-1-a/Destroy 5 years after Life of Facility
Form-2165, Verification of Barcode Labels	Facility Operating Record/ENV2-a-1-a/Destroy 5 years after Life of Facility

8.0 EXHIBITS

Exhibit 1 – Label Examples

9.0 APPENDICES

Appendix A – Container Labeling Reference Table

Appendix B – Torque Value Reference Table

Appendix C – Table of Incompatible IDCs

Appendix D – Historical IDC Reference Table

Appendix E – Contamination Control Enclosure IDC Reference Table

Appendix F – Revision Log

Exhibit 1 – PCB Label Examples

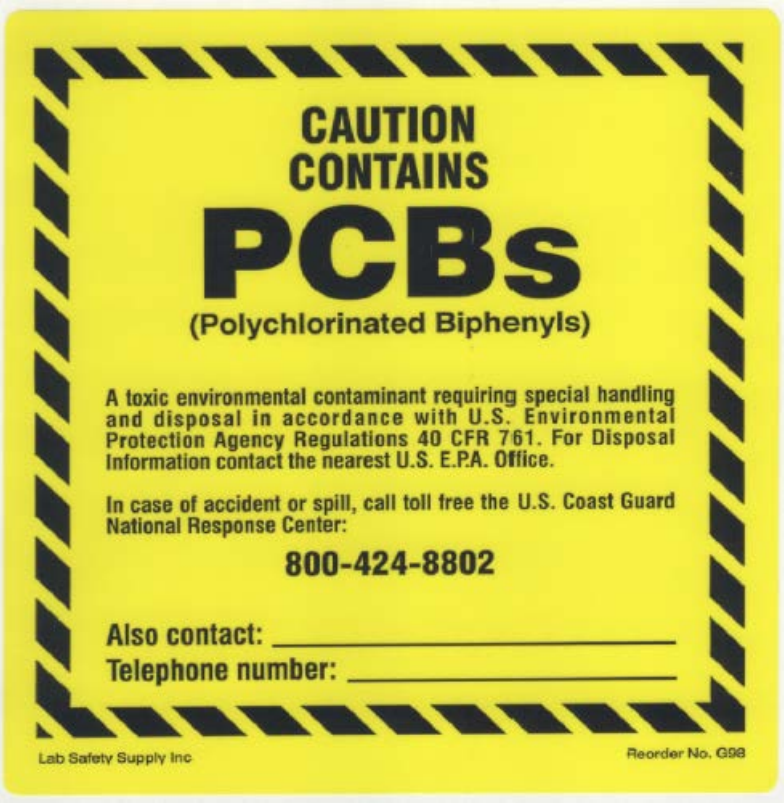

Appendix A – Container Labeling Reference Table

Type/Labels	55-Gal Drum	83-/85-Gal Drum	100-/110-Gal Drum	Cargos/Box
Barcode	Six labels (spaced evenly at approximately 60 degree intervals) below the bottom rolling hoop from top to bottom (i.e., vertically)	Six labels (spaced evenly at approximately 60 degree intervals) 6-10 in. above the bottom of drum from top to bottom (i.e., vertically)	Eight labels (spaced evenly at approximately 45 degree intervals) between first and second rolling hoop from top to bottom (i.e., vertically)	Two horizontal labels on long axis 4 in. above bottom edge of container, including skids Two vertical labels on short axis 2 ft up/1 ft in from left side
Radioactive Material	One label between middle and top rolling hoop	One label between middle and top rolling hoop	One label between middle and top rolling hoop	One label on side of the long axis
Hazardous Waste	One label between middle and top rolling hoop	One label between middle and top rolling hoop	One label between middle and top rolling hoop	One label on side of the long axis
PCB IDCs RF-003, RF-743, RF-746, BC-203, and BN-603	Two 6-in. PCB labels opposite each other	Two 6-in. PCB labels opposite each other	Two 6-in. PCB labels opposite each other	Four 6-in. PCB labels one on each side
Beryllium	One label between middle and top rolling hoop	One label between middle and top rolling hoop	One label between middle and top rolling hoop	One label on side of the long axis
>700 lb	Three labels placed on each drum approximately 120 degrees apart below the middle rolling hoop	Three labels placed on each drum approximately 120 degrees apart below the middle rolling hoop	Three labels placed on each drum approximately 120 degrees apart below the middle rolling hoop	N/A
>4,000 lb	N/A	N/A	N/A	Four labels one on each side of the box

Type/Labels	55-Gal Drum	83-/85-Gal Drum	100-/110-Gal Drum	Cargos/Box
Incompatibles	Two labels underneath top rolling hoop	Two labels underneath top rolling hoop	Two labels underneath top rolling hoop	N/A
High Fissile Gram Equivalent (FGE) >380	Two labels 180 degrees between middle and top rolling hoop	Two labels 180 degrees between middle and top rolling hoop	Two labels 180 degrees between middle and top rolling hoop	Two labels in center one on each side of the long axis
Elevated Dose Rate	Two labels 180 degrees between middle and top rolling hoop	Two labels 180 degrees between middle and top rolling hoop	Two labels 180 degrees between middle and top rolling hoop	Two labels in center one on each side of the long axis
> WAC FGE >200 FGE <380 FGE (Drums) >325 FGE <380 FGE (boxes)	Two labels 180 degrees between middle and top rolling hoop	Two labels 180 degrees between middle and top rolling hoop	Two labels 180 degrees between middle and top rolling hoop	Two labels in center one on each side of the long axis
Offsite Waste	Two labels 180 degrees between middle and top rolling hoop	Two labels 180 degrees between middle and top rolling hoop	Two labels 180 degrees between middle and top rolling hoop	Two labels in center one on each side of the long axis
Potential pyrophoric materials	Two labels 180 degrees between middle and top rolling hoop	Two labels 180 degrees between middle and top rolling hoop	Two labels 180 degrees between middle and top rolling hoop	Four labels one on each side

Appendix B –
Torque Value Reference Table

Container Type	Torque Value	Special Instructions
Cake Box (bottom opening)	40 – 50 ft-lb	Alternating torque sequence from side to side.
Cake Box (bottom top opening)	15 – 18 ft-lb	Alternating torque sequence from side to side.
83-/85-gal container (previously used)	60 ft-lb	Rubber mallet is used to ensure lid ring is seated during torque application. Lid ring ends do not touch. Jam nut is tightened on unthreaded lug of drum ring.
55-/83-/85-/110-gal container (new Skolnik)	60 ft-lb	Rubber mallet is used to ensure lid ring is seated during torque application. Lid ring ends do not touch. Jam nut is tightened on unthreaded lug of drum ring.
55-83-/85-/110-gal container (new Myers)	≥60 ft-lb	Rubber mallet is used to ensure lid ring is seated during torque application. Lid ring ends do not touch. Jam nut is tightened on unthreaded lug of drum ring.
BR-90 Bull Run Box	28 – 35 ft-lb	Please see Page B2 for instructions.
P-90 Box	20 ft-lb	Torque per manufacturer instructions
Filter NucFil-019SDS	15 ft-lb	

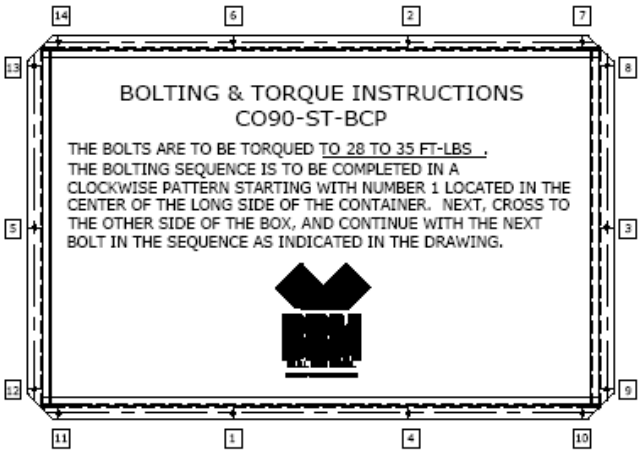
14
6
2
7
13
8
5
3
12
9
11
1
4
10
BOLTING & TORQUE INSTRUCTIONS
CO90-ST-BCP
THE BOLTS ARE TO BE TORQUED TO 28 TO 35 FT-LBS .
THE BOLTING SEQUENCE IS TO BE COMPLETED IN A CLOCKWISE PATTERN STARTING WITH NUMBER 1 LOCATED IN THE CENTER OF THE LONG SIDE OF THE CONTAINER. NEXT, CROSS TO THE OTHER SIDE OF THE BOX, AND CONTINUE WITH THE NEXT BOLT IN THE SEQUENCE AS INDICATED IN THE DRAWING.

Appendix C – Table of Incompatible IDCs

NOTE: *Item Description Codes that are not listed in the following table are considered compatible with all waste, including waste that is included in this table, with the exception of potential pyrophoric materials.*

Waste Type	General Waste Description
Acids	ID-150: Laboratory Waste MD-805: Asbestos Filters MD-813: Glass Filters and Fiberglass MD-834: High Level Acid RF-241: Americium Process Residue
Oxidizers	ID-005: Evaporator Salts Retrieved RF AE-100: General Plant Waste MD-805: Asbestos Filters MD-811: Evaporator and Dissolver Sludge MD-813: Glass Filters and Fiberglass MD-834: High Level Acid RF-005: Evaporated Salts RF-241: Americium Process Residue RF-430: Resin, Ion Column-Unleached RF-745: Pits 11 & 12 Evaporator Salts SD-703: Inorganic Sludge
Caustics	MD-835: High Level Caustic

Waste Type	General Waste Description
Halogenated Organics	RF-003: Organic Setups, Oil Solids RF-700: OASIS Waste RF-801: Solidified Organics BN-501: AMWTP PCB Soil BN-518: TRU Supercompactor Squeezants BN-526: Sample Returns BN-528: TRU PCB Liquids Generated During Retrieval BN-603: Absorbed Analytical Liquids BN-605: Absorbed Liquids TSCA/PCB RF-743: Pits 11 & 12 Organic Setups RF-746: Pits 11 & 12 Pad Oil Drums SD-704: Organic Sludge SD-705: Debris SD-706: Soil UN-00A: Undefined homogeneous solids
Unknowns	PC-000: "True" or post-RTR unknown
Potential Pyrophoric Materials	RF-751: Roaster Oxide RF-999: Potential Roaster Oxide
Heterogeneous Debris	RF-998: Heterogeneous Debris
Heterogeneous Debris	IW-179: Early Waste Retrieval Heterogeneous Debris

(HWMA/RCRA Permit; HWMA/RCRA TSA IS Document)

Appendix D–
Historical IDC Reference Table

Table 1. Retrieval Operations Recommended IDC Summary Category S3000 Sludge.

Historical Prefix	Historical IDC	Waste Form Description	IDC Assignment
741	**001, 01, 1**	**First Stage Sludge**	**RF-001**
742	**002, 02, 2**	**2nd Stage Sludge**	**RF-002**
743	**003, 03, 3**	**Organic Setups, Grease Plant**	**RF-003**
744	**004, 4**	**Special Set Ups**	**RF-004**
745	**005, 05, 5**	**Evaporator Salts**	**RF-005**
444		Roaster Oxide	RF-751
1544		Roaster Oxide	RF-751
362		Roaster Oxide	RF-751
83		Roaster Oxide	RF-751
883		Roaster Oxide	RF-751
865		Roaster Oxide	RF-751
		Dirt (Soil)	RF-090
995		Sewer Sludge (995 Sludge)	RF-095
		Filter Sludge	RF-290
		Graphite Heels	RF-311
		Insulation Heels	RF-361
		Oil-Dri	RF-375
		Sand, Slag, and Crucible Heels	RF-393
		Molten Salt – 30% Unpulverized	RF-409
		Molten Salt – 30% Pulverized	RF-410
		Electrorefining Salt	RF-411
		Gibson Salt	RF-412
		Direct Oxide Reduction Salt	RF-414
		Ash, Incinerator (Virgin)	RF-420
		Ash Heels	RF-421
		Soot	RF-422
		Unleached Ion Column Resin	RF-430
		Leached Resin	RF-431
		Resin, Leached and Cemented	RF-432
		Building 776 Process Sludge	RF-976
		Laundry Sludge	RF-978

Historical IDCs and Prefix in **BOLD** are the most likely S3000 containers that may be encountered.

Table 2. Retrieval Operations Recommended IDC Summary Category S5000 Debris.

Historical IDC	Description of Waste Form	IDC Assignment
300	**Graphite Molds**	**RF-300**
330	**Paper and Rags-Dry**	**RF-330**
336	**Paper and Rags-Moist**	**RF-336**
337	**Plastic, Teflon®, Washables, PVC**	**RF-337**
360	**Insulation**	**RF-360**
440	**Glass**	**RF-440**
480	**Scrap Metal (Non SS)**	**RF-480**
950	**LSA Metal, Glass, etc.**	**RF-950**
010	Paper & Rags	RF-010
020	Wood & Benelex	RF-020
030	Plastic	RF-030
040	Rubber	RF-040
050	Metal Scrap	RF-050
060	Glass	RF-060
070	Graphite	RF-070
301	Graphite Cores	RF-301
303	Scarfed Graphite Chunks	RF-303
310	Graphite Scarfings	RF-310
312	Coarse Graphite	RF-312
320	Heavy Non-special Source Metal	RF-320
321	Lead	RF-321
328	Ful-Flo® Incinerator Filters	RF-328
335	Absolute 8 × 8 Filters	RF-335
338	Insulation and Chemical Warfare Service (CWS) Filter Media	RF-338
339	Leaded Rubber Gloves and Aprons	RF-339
368	Magnesium Oxide Crucibles	RF-368
372	Grit	RF-372
376	Cemented Insulation & Filter Media	RF-376
377	Coarse Fire Brick	RF-377
391	Crucibles & Sand	RF-391
392	Sand, Slag, and Crucible	RF-392
416	Zinc Magnesium Alloy Metals	RF-416
441	Raschig Rings, Unleached	RF-441
442	Raschig Rings, Leached	RF-442
460	Washables, Rubber, Plastic	RF-460

Historical IDC	Description of Waste Form	IDC Assignment
463	Leaded Rubber Gloves and Aprons	RF-463
464	Benelex® and Plexiglas®	RF-464
481	Leached Metals (Non SS)	RF-481
488	Glovebox Parts w/Lead	RF-488
490	High efficiency particulate air (HEPA) Filters and CWS Filters	RF-490
491	Plenum Prefilters	RF-491
833	Plastics, TRU Mixed	RF-833
831	Dry Combustibles	RF-831
832	Wet Combustibles	RF-832
900	Low specific activity (LSA) Paper, Plastics, Etc.	RF-900
970	Wood	RF-970
760	**Pad 1 Cells 1 and 2 RF Debris**	**RF-760***
430	**Un-leached Resin**	**RF-430 (set aside)****
431	**Leached Resin**	**RF-431 (set aside)****

*The prefixes for debris waste (S5000) are variable. For debris, there could be a two or three digit IDC, or only a Waste Description. If container contents are visible, the contents are debris, and the generator is identified as Rocky Flats, assign RF-760 from Pad 1, Cell 1, or Cell 2.

** The only exception is Resin IDC 430, 431 and 241 will be set aside until further notice.

Bolded IDCs are the most likely debris IDCs that may be encountered in Cell 1 and Cell 2.

Appendix E
Contamination Control Enclosure IDC Reference Table

Historical Prefix	Historical IDC	Waste Form Description	IDC Assignment
741	**001, 01, 1**	**First Stage Sludge**	**RF-741**
742	**002, 02, 2**	**2nd Stage Sludge**	**RF-742**
743	**003, 03, 3**	**Organic Setups, Grease Plant**	**RF-743**
744	**004, 4**	**Special Setups**	**RF-744**
745	**005, 05, 5**	**Evaporator Salts**	**RF-745**
995	**095**	**Sewer Sludge (995 Sludge)**	**RF-749**
444		Roaster Oxide	RF-751
1544		Roaster Oxide	RF-751
362		Roaster Oxide	RF-751
83		Roaster Oxide	RF-751
883		Roaster Oxide	RF-751
865		Roaster Oxide	RF-751
RF-090		Dirt (Soil)	RF-753
		S3000 Waste from Cargos	
		Filter Sludge	RF-290
		Graphite Heels	RF-311
		Insulation Heels	RF-361
		Oil-Dri	RF-375
		Sand, Slag, and Crucible Heels	RF-393
		Molten Salt – 30% Unpulverized	RF-409
		Molten Salt – 30% Pulverized	RF-410
		Electrorefining Salt	RF-411
		Gibson Salt	RF-412
		Direct Oxide Reduction Salt	RF-414
		Ash, Incinerator (Virgin)	RF-420
		Ash Heels	RF-421
		Soot	RF-422
		Unleached Ion Column Resin	RF-430
		Leached Resin	RF-431
		Resin, Leached and Cemented	RF-432
		Building 776 Process Sludge	RF-976
		Laundry Sludge	RF-978

Historical IDCs and Prefix in **BOLD** are the most likely S3000 containers that may be encountered.

Appendix F–
Revision Log

Revision Number	Date Approved	Pages Affected	Description of Revision
0	07/16/02	All	Initial issue. DCR-1200 – Issued for formal validation during commissioning activities.
1	10/21/02	All	DCR-1477 – Changed language in Section 4.11 for consistency. Editorial changes throughout. Included requirements from ALARA Review, Changed CSA to CWR and provided definition.
2	11/07/02	All	DCR-1711 - Edited sections 4.7 through 4.14 to be consistent with OI-23 and incorporated additional actions for discovery of contaminated materials, Editorial changes.
3	12/12/02	All	DCR 1808, Incorporated changes in accordance with the RCRA Matrix, Removed Section 4.8.
4	1/8/03	Various	DCR-1873, Incorporated changes to reflect more accurate waste container extraction.
5	01/15/03	Page 18	DCR-1915, Minor change. Change step 4.5.14 to read: Check compressor discharge filters.
6	01/30/03	Various	DCR-1987, Minor change to ensure STL, RT, and IH are all included to be notified.
7	01/24/03	Various	DCR-2066, Included changes from RCRA Implementation Matrix
8	03/10/03	Various	DCR-2096, Included changes required from DOE pre-start findings IS. 1-2
9	3/17/03	Pages 5, 18, 12, 32, 35, & 36	DCR-2113, Included changes from HWMA/RCRA Implementation Matrix, ES&H review. Incorporated PPE and ISIH sampling requirements.
10	3/26/03	Various	DCR-2146 - Added CAM requirements from DOE Letter, Added PPE requirements from RPT-ESH-011.

AMWTP INSTRUCTION		
INST-OI-09, Rev. 57	Issued: 07/23/14	Effective: 07/23/14 @ 0900 Hrs

Retrieval Inspection Station Operations

Revision Number	Date Approved	Pages Affected	Description of Revision
11	03/27/03	All	DCR-2126, Minor change to amend date from DOE Approves Retrieval Operations Start-up to 03/28/03 and editorial update to Records Section.
12	06/26/03	Pg 18, 32, 33, & 35	DCR-2337, Minor Change to enhance procedure for ease of use and clarity.
13	7/8/03	Pg 25	DCR-2351, Minor Change to clarify breached container repair steps.
13 FC-1	7/13/03	Various	DCR-2368, Add steps for placing drums and boxes in designated storage locations.
14	7/17/03	Various	DCR-2365, Add steps for operating the Remote Drum Punch System, Added note at 4.7.1, Incorporated Field Change
14 FC-1	8/03/03	Sec 4.7.4.1, Pgs 29-25	DCR-2387, Change wording for clarification, and to allow some steps to be performed out of sequence to allow for the most productive sequence during Conveyor, Vacuuming, and Inspection Station Operations.
15	8/6/03	Pages 43-47	DCR-2389, Add Corrective Action as identified from ORPS Report # ID--BNFL-AMWTF-2003-0005, and Incorporate Field Change from Rev 14 FC-1.
15 FC-1	8/13/03	Various	DCR-2407, Correct steps regarding the maximum load for transport trailers.
16	11/11/03	Various	DCR-2484, Remove Rev 15 FC-1 and add Precaution for maximum trailer loading.
17	01/21/04	Various	DCR-2619. Add reference and revise information to implement the Transport Vehicle Crash Addendum (BNFL 5232-RPT-016). Section revised to meet action item identified in ORPS: 2003-0008, “Waste Drum Fire” C/A #4.
18	05/27/04	All	DCR-2960. Deleted Step 4.3.3. Minor formatting updates.

AMWTP INSTRUCTION		
INST-OI-09, Rev. 57	Issued: 07/23/14	Effective: 07/23/14 @ 0900 Hrs

Retrieval Inspection Station Operations

Revision Number	Date Approved	Pages Affected	Description of Revision
19	6/28/04	9, 13, 24	DCR-3134. Storage Permit requirement implementation.
19 FC-1	10/22/04	4.3.23, 4.8.1.13, 4.12.2	DCR-3375, Remove handling of incompatible waste references not applicable to this instruction
19 FC-2	10/23/04	4.8.1.8, 4.8.1.16.1/2	DCR-3376, Revised labeling steps to conform with steps outlined in INST-FOI-26, incorporate Form-1089 information.
19 FC-3	03/23/05	Pgs 13-16 and App A	DCR-4217, Changes to steps and Appendix A to reflect new NE-007 CWRs.
19 FC-4	04/05/05	4.8.2.11-13, 4.8.1.12-14	DCR-4253, Steps to clarify container markings and when a planar array is used.
20	04/13/05	All	DCR-4111, Complete re-write to incorporate FC-1 and 2, NE-007 rev 3 with clarification of ES&H, Crit, and DSA requirements, Operator validations, SME review, and Editorial to reflect requirements of MP-DOCS-18.1.Include updated DSA and TSR requirements, CBFO comment resolution; incorporate FC-4, FC-3 is already incorporated through rev 20A.
20 FC-1	05/11/05	37, 451	DCR-4305, Additional information for labeling 83/85 gallon drums.
21	06/30/05	All	DCR-4385, Incorporate FC-1, Update to new AMWTP, INL format, Remove Appendix A, Update to reflect using OI-11 for stacking and storing containers, Include beryllium labels, and Reorganize Section 4.3.
22	08/02/05	Pg 5 and 13,, Step 4.7.3.1	DCR-4412, Remove paragraph for > WAC that is covered in OI-11 and added verbiage to clarify use of pallets and spacers and when stacking drums three high in the TSA-RE.
22, FC-1	12/13/05	Pgs. 12. 27, 28, and 31	DCR-12/13/05-1424. Changes for flexibilities for retrieval operations.

Revision Number	Date Approved	Pages Affected	Description of Revision
22, FC-2	12/18/05	Pg. 12	DCR-12/18/05-1100. Change is for rolling stock flexibility during retrieval operations.
23	02/07/06	All	DCR-4641. Criticality Safety Implementation. Incorporate blue sheet changes and reformat per MP-DOCS-18.1.
24	04/27/06	Various	DCR-4946. Add notes and steps to implement new enhanced drum safety handling requirement, added from existing short term instruction, and for efficient operations.
24 FC-1	4/30/06	10/43	DCR-4987. To incorporate steps for safe installation of lid restraints on bulged drums.
25	06/20/06	Various	DCR-5057. Incorporated DCR-4987 Field Change 1. Incorporated resolution to CARs 22207 and 22404. Changes made to be consistent with annual DSA update.
25 FC-1	06/28/06	Pgs 33, 40, 46 & 50	DCR-5120. Incorporate EDF-0075 for handling deformed or out-of-round drums.
26	12/19/06	Various	DCR-5524. Incorporate DCR-5120, delete P&L-3.1.1.2 which conflicts with P&L 3.1.1.7, delete P&L 3.1.4.4 to charge equipment in the TSA-RE, edit per MP-DCOS-18.1.
26 FC-1	05/10/07	Various	DCR-5950. Changed to create simpler, more concise operating instructions by eliminating repeating steps.
26 FC-2	05/13/07	7, 3, 8	DCR-5951. Changed to read proper step.
26 FC-3	06/25/07	40, 41	Dcr-6145. CAR 25743, reference OI-24 for drum closure instructions.
26 FC-4	06/26/07	Various	DCR-6149. INST-CMNT-10.8.2 superseded by MP-CMNT-10.22
27	08/29/07	Various	DCR-6164. Incorporate DCRs-5950, 5951, 6145, and 6149 to make field changes permanent. Entire document rewrite. Steps added for clarification for handling breaches in sludge drums and for additional information.

Revision Number	Date Approved	Pages Affected	Description of Revision
27 FC-1	09/27/07	4.12.2.1.2	DCR-6473, change wording when a CAM alarms to evacuate both Pad 1 and Pad 2
27 FC-2	10/03/07	4.12.2.1.5	DCR-6485, New step to secure ventilation when a CAM alarms.
27 FC-3	10/09/07	4.12.5	DCR-6491, Add new section 4.11.5
27 FC-4	11/03/07	3.1.2.6, 4.3.16 and Notes	DCR-6550, Change radiological survey station to IS/IH, New step and new note and update step reference in previous note.
27 FC-5	11/05/07	4.12.2.1.2	DCR-6555, Replace FC-1 "Pad 1 and/or Pad 2 as directed . . ."
28	1/24/08	Section 4.6	DCR-6637, Incorporate field changes, correct step sequence. Minor editorial
28 FC-1	3/7/08	Pg 31, 36	DCR-6914. Revised box inspection criteria to delete references to Appendix A and to incorporate appropriate inspection criteria.
28 FC-2	3/8/08	Pg 23	DCR-6915. Changed Step 4.3.19.
29	04/10/08	Various	DCR-6841. Updated references per the CCP transition (changing MP-TRUW-8.3 to CCP-PO-03). Incorporated FC-1 (DCR-6914) and FC-2 (DCR-6915).
30	04/15/08	Various	DCR-7026. Revised HWMA/RCRA roll-downs, pre-job brief statement to include MP-COPS-9.14, deleted steps regarding VAC-U-MAX, clarified labeling.
30 FC-1	04/21/08	Various	DCR-7058. Addresses numerous requirements and procedure steps that could not be fully complied with.
31	05/06/08	Various	DCR-7069. Incorporate DCR-7058 to make field change permanent.
32	06/12/08	Various	DCR-7134. Revised roles and responsibilities to be specific to procedure, updated roles for operations restructuring and CWR roll-downs s to include citations, deleted wire brush from inspections, clarified which container is being created and ensured labeling on overpacked container. Incorporate reviewers' comments.

AMWTP INSTRUCTION		
INST-OI-09, Rev. 57	Issued: 07/23/14	Effective: 07/23/14 @ 0900 Hrs

Retrieval Inspection Station Operations

Revision Number	Date Approved	Pages Affected	Description of Revision
32 FC-1	06/24/08	Various	DCR-7248. Correct steps to allow container movement per INST-OI-11.
32 FC-2	06/24/08	Various	DCR-7280. Add note: Steps in this procedure may be performed out-of-sequence or concurrently to support operational needs as directed by STL. Change word "Leer" in this step to "level." Add steps to read "Record historical IDC to side of container."
32 FC-3	07/01/08	Pg 27/4.4	DCR-7302. Delete all of Sections 4.1 and 4.2.
32 FC-4	07/02/08	Pg 16 and 17, Sections 4.1 and 4.2	DCR-7298. Add Step 4.4.6: "If container is unknown, then weigh container and enter the weight into WTS." Current Step 4.4.6 becomes 4.4.5.1.
33	07/15/08	Various	DCR-7315. Incorporate field changes for DCRs-7248, 7280, 7298, 7248. Apply Blue Sheet Changes (DCR-6811) for PSM/SS Ops Restructuring initiative.
34	10/02/08	Various	DCR-7379. Revisions to improve process flow, clarification, and to ensure container is inspected for structural soundness in response to CARs-39989 and -40603.
34 FC-1	11/09/08	Various	DCR-7720. Revised roles and responsibilities for OT and RT, 3.1.3.1, deleted modified Level C PPE including and added PPE per AMOW in 3.1.3.5, deleted uncharacterized from 3.1.5.3.
34 FC-2	01/16/09	Pg 36/4.4.18	DCR-7923. Change Form-1090 to Form-1625.
35	01/21/09	Various	DCR-7657. Incorporated DCR-7720 and DSA changes, re-formatted per MP-DOCS-18.4, edited per MP-DOCS-18.1. DCR-7923 was not incorporated as this section was deleted through DSA roundtable.
35 FC-1	04/09/09	Pg. 23/4.2.4 Pg. 29 and 30	DCR-8235. Delete Step 4.2.4, Pg 29 Step 4.2.22 and 4.2.23 Pg 30 Step 4.2.24 through 4.2.24.3.
36	07/14/09	Various	DCR-8302. Incorporated DCR-8235. Changes for logon clarification and to generate NCRs (CAR 44229), edited per MP-DOCS-18.1.

AMWTP INSTRUCTION		
INST-OI-09, Rev. 57	Issued: 07/23/14	Effective: 07/23/14 @ 0900 Hrs

Retrieval Inspection Station Operations

Revision Number	Date Approved	Pages Affected	Description of Revision
37	10/08/09	Various	DCR-8575. Action Item 46473. Implemented PCB marking requirements. Removed items/step pertaining to the TSA-RE conveyor. Made editorial changes/updates per MP-DOCS-18.1.
37 FC-1	12/02/09	Pg. 15 Sec. 4.0	DCR-8876. Added new Steps for RTs to perform LAWs and visual inspection.
38	03/10/10	Various	DCR-8970. Incorporated FC-1 (DCR-8876). CAR 48600. Clarified instructions for using a barcode scanner and what to do if a barcode scanner is unavailable. Added steps for using an extra barcode when creating a drum in a contamination area. Also, deleted some P&Ls that are no longer needed.
39	05/11/10	Pg. 37 Section 4.6	DCR-9256. Added section for container stabilization panel placement and securing.
39 FC-1	5/17/10	Pg 14 Section 4.0	DCR-9285. Clarification for RTs to perform (the initial) LAWs and visual inspection.
40	06/16/10		DCR-9367. Incorporate changes regarding containers with small breaches. Incorporate FC-1 to make permanent.
40 FC-1	07/01/10	Pg 37	DCR-9395. Added note to allow Steps 4.6.1.4 and 4.6.2.4 to be worked out of sequence.
41	11/18/10	Pg 37	DCR-9657. Incorporate FC-1 to make permanent.
42	08/17/11	Various	DCR-10219. Complete rewrite to reflect the WTS inspection station methods used in the creating and tracking retrieved waste containers in the TSA-RE.
42 FC-1	09/06/11	Various	DCR-10377. Changes made as a result of MSA findings, so that procedure can be performed correctly, and to identify additional container types used.
43	03/04/12	Various	DCR-10714. Incorporate FC-1 (DCR-10377) to make permanent. Incorporated ITG Bluesheet-019. Rewrite document to support retrieval process.

AMWTP INSTRUCTION		
INST-OI-09, Rev. 57	Issued: 07/23/14	Effective: 07/23/14 @ 0900 Hrs

Retrieval Inspection Station Operations

Revision Number	Date Approved	Pages Affected	Description of Revision
44	03/16/12	Various	DCR-11018. Clarify steps, remove steps and statements no longer needed, and address observations/comments from MSA (CAR68366).
45	03/19/12	Various	DCR-11051. Made corrections in various steps adding "PSM"; SS: Notify the PSM; for clarification and consistency with 100, 101. Various editorial corrections.
46	06/08/12	Various	DCR-11284. Added new Section 4.6 for creating and loading SDOPs and added historical IDC reference table in Appendix E.
47	07/18/12	Various	DCR-11416. Added steps for clarification.
48	08/06/12	Various	DCR-11471. Incorporated 2012 DSA changes.
49	08/30/12	All	DCR-11558. Changed the document from Controlled Activity to General Use.
49 FC-1	10/30/12	Pg. 43	DCR-11893. Update definition for breached containers for the air permit.
49 FC-2	11/19/12	Pg. 9	DCR-11963. To allow SDOPS to be built as needed.
50	12/17/12	Various	DCR-12003. Implemented FMP-1263 (to add for SMOP/EMOP/metal overpacking process.
51	02/19/13	Various	DCR-12121. Added requirements for tracking, new unpack option, and clarified filter options.
52	05/05/13	Various	DCR-12248. Changes made to incorporate new bar code LCO and correct IDC number.
52 FC-1	05/13/13	Pages 23, 24, and 25	DCR-12394. FC to add steps for boxes related to ESS label placement on boxes for child inner container ID.
53	07/01/13	Various	DCR-12369. Incorporated DCR-1294. Changes made for release of SCR 4440.
54	10/21/13	Various	DCR-12709. Changes made to update the Air limits for the Environmental permit.
55	12/17/13	Various	DCR-12934. Changes made to incorporate new sections for container creation for cargo unpacking, and for cargo closure, new Appendix E, and DSA/TSR implementation.
55 FC-1	04/03/14	Page 39 and Appendix B	DCR-13314. Updating for torque specifications.

AMWTP INSTRUCTION		
INST-OI-09, Rev. 57	Issued: 07/23/14	Effective: 07/23/14 @ 0900 Hrs

Retrieval Inspection Station Operations

Revision Number	Date Approved	Pages Affected	Description of Revision
55 FC-2	04/10/14	Appendix B	DCR-13361. Updating torque specifications.
56	04/30/14	Various	DCR-13348. Incorporated DCR-13314. Changes made to remove information no longer needed, clarification on container types and markings, for better process flow, and to add a new section on trash cargo container creation.
56 FC-1	05/05/14	Various	DCR-13429. To update filter insertion events and container creation specifics.
57	07/23/14	Various	DCR-13497. Revised procedure for clarification, to remove information no longer required, and so that steps are specific for WTS activities located in the RCE waste export airlock or the CCE.

Waste Container Handling

(General Use)

Advanced Mixed Waste Treatment Project

Approval:

(Signature on file. See DCR-13426.) 08/01/14

Date

Verification of Effective Revision: (After verifying current revision, replace cover page on working copy if more space is needed.)

Initials	Date	Initials	Date	Initials	Date	Initials	Date

AMWTP INSTRUCTION		
INST-OI-11, Rev. 57	Issued: 08/01/14	Effective: 08/02/14
Waste Container Handling		

TABLE OF CONTENTS

1.0 PURPOSE/SCOPE 1
2.0 ROLES AND RESPONSIBILITIES 1
3.0 PRECAUTIONS AND LIMITATIONS/PREREQUISITES 2
3.1 Precautions and Limitations 2
3.2 Prerequisites 8
4.0 INSTRUCTIONS 9
4.1 General Instructions 9
4.2 Removing Containers from Storage Array or Process 12
4.3 Labeling Containers 17
4.4 Waste Container Transport 22
4.5 Waste Container Storage 25
4.6 Outside Storage Area Requirements 39
4.7 Toaster Cover Installation 40
4.8 Preparing Boxes for Facility Feed 42
4.9 Loading Transport Trailers Docked to WMF-676 43
4.10 Unloading Transport Trailers Docked to WMF-676 49
4.11 Loading/Unloading Shredder Boxes 50
4.12 Post Performance Activities 52
4.13 Post-Job Review 53
4.14 Abnormal and Infrequent Operations 53
5.0 DEFINITIONS 73
6.0 REFERENCES 75

7.0 RECORDS 77

8.0 EXHIBITS 78

9.0 APPENDIXES 78

Appendix A – Box Sizes and Configurations A1

Appendix B – Revision Log B1

AMWTP INSTRUCTION		
INST-OI-11, Rev. 57	Issued: 08/01/14	Effective: 08/02/14
Waste Container Handling		

1.0 PURPOSE/SCOPE

This instruction provides guidance for handling waste *containers* (see def.) as addressed in the Hazardous Waste Management Act/Resource Conservation Recovery Act (HWMA/RCRA) Permit, the HWMA/RCRA Transuranic Storage Area (TSA) Interim Status (IS) document, Comprehensive Environmental Response Compensation Liability Act (CERCLA) storage, and various nuclear criticality safety evaluations for the AMWTP at the Idaho National Laboratory (INL).

This procedure applies to movement, handling, and storage of AMWTP barcoded waste containers in the *mixed waste management units* (MWMUs; see def.) of the AMWTP.

(HWMA/RCRA TSA IS Document; HWMA/RCRA Permit)

2.0 ROLES AND RESPONSIBILITIES

Performer	Responsibilities
Operations Technician (OT)	• Unless otherwise specified, performs the steps in this instruction • Responsible for completing and accurately recording all waste container movements in the Waste Tracking System (WTS).
Fissile Material Handler (see def.)	• Provides direct supervision of all container handling, where containers have a value that exceeds 380 ^{239}*Pu fissile gram equivalent* (FGE, see def.) • Establishes and posts *isolation storage areas* (ISAs; see def) with assistance from Criticality Safety personnel.
Shift Supervisor (SS)	• Ensures correct container storage of *pyrophoric materials* (see def.) • Coordinates nonconformance reports (NCRs) • Evaluates surveys/conditions for operations • Makes notifications • Initiates fire impairments • Creates written recovery plan for *criticality working requirement* (CWR; see def.) violations • If Form-1089, Waste Tracking Information for Movement of Waste, is used, ensures container tracking information has been manually entered into WTS • Performs pre-job briefs and post-job reviews.

Performer	Responsibilities
Radiological Controls Shift Supervisor (RCSS)	• Evaluates conditions in response to upset or abnormal conditions.
Industrial Safety/Industrial Hygiene (IS/IH)	• Evaluates conditions in response to upset or abnormal conditions.
Plant Shift Manager (PSM)	• Notifies the INL Fire Department of the location of *pyrophoric* (see def.) materials.
Manager Providing Oversight	• Signs form to document that dual verification was performed correctly.

3.0 PRECAUTIONS AND LIMITATIONS/PREREQUISITES

3.1 Precautions and Limitations

3.1.1 Containers with greater than 380 ^{239}Pu FGE shall be promptly (within the same shift) placed into a planar (no stacking) ISA. Criticality Safety shall be notified if the container cannot be transferred during the current shift.

(EDF-0034, CWR 7.3.7)

3.1.2 Drums/containers/packages that contain transuranic (TRU) waste that are smaller than a 55-gal drum shall be promptly (within the same shift) overpacked into 55-gal or larger drums or boxes. Criticality Safety shall be notified if the drum/containers/packages cannot be overpacked during the current shift.

(EDF-0034, CWR 7.3.4)

3.1.3 Discovery of a container in violation of the Criticality Safety storage area requirements shall be promptly (within the same shift) reported to Criticality Safety. Criticality Safety shall approve a written recovery plan, which MAY permit leaving the container in place until such time the container will be normally handled.

(EDF-0034, CWR 7.3.14)

3.1.4 Personnel will maintain awareness so as to not place any portion of their head or torso over the top (lid) of any unvented drum, including empty unvented drums, when practical.

(RPT-ESH-049)

3.1.5 Normal position for a rollup door is fully open or fully closed. Rollup doors may be partially open for ventilation purposes provided that the bottom of the door is approximately 4 ft or less off the ground. This provides some ventilation but ensures that the door will not be used for vehicle access unless fully opened. Exceptions to this may be granted by the SS on a case-by-case basis.

3.1.6 Containers may be located on the floor while in transition (e.g., loading/unloading) as long as they are *actively managed* (see def.).

(HWMA/RCRA Permit; HWMA/RCRA TSA IS Document)

3.1.7 Boxes with runner/stringers or cribbing are considered elevated and may be stored directly on the floor of Pad 1 or Pad R.

(HWMA/RCRA Permit; HWMA/RCRA TSA IS Document)

3.1.8 All boxes stored on Pad 2 must be elevated on runners, cribbing, fire-retardant plywood, or fire-retardant pallets, with the exception of shredder boxes. Shredder boxes may be compliantly stored on the floor.

3.1.9 No more than 20 sheets of plywood may be staged for stacking operations. Fire-retardant wood is exempt.

(RPT-ESH-01)

3.1.10 Secondary containment (i.e., RCRA floor or spill pallet) is required if a container contains liquids or has questionable container integrity. Secondary containment is not required for the following:

- Containers with no more than 1% liquid as long as the container is within a TRUPACT container in the AMWTP outside storage area or the TRUPACT loading area (TLA) of WMF-635.

(HWMA/RCRA Permit; HWMA/RCRA TSA IS Document)

3.1.11 Waste that has been retrieved from Pad 1 or Pad R of WMF-636 may remain on either Pad 1 or Pad R without characterization as long as the container has not been stored anywhere other than Pad 1 or Pad R.

(HWMA/RCRA TSA IS Document)

3.1.12 Waste may be moved to Pad 1 or Pad R that has not been physically characterized or has been identified to contain liquids as long as it is stored on Pad 1 or Pad R with the use of secondary containment.

(HWMA/RCRA TSA IS Document)

3.1.13 *Offsite waste* (see def.) is not permitted to be stored on Pad 1 or Pad R.

3.1.14 A row of containers identified as pyrophoric materials shall not be stored adjacent (closer than 10 ft) to a row of containers that contains a container made of combustible material (e.g., plywood, cardboard, fiberglass reinforced plywood [FRP]).

(HWMA/RCRA Permit; HWMA/RCRA TSA IS Document)

3.1.15 Only *INL-generated waste* (see def.) and supercompacted offsite waste may be stored on Pad 2.

(HWMA/RCRA Permit; HWMA/RCRA TSA IS Document)

3.1.16 *True unknown wastes* (see def.) may be stored in the MWMUs other than on Pad 1, Pad R, or Pad 2 of WMF-636 or the AMWTP outside storage areas pending further characterization.

3.1.16.1 Additional labels shall be affixed to those containers with unknown contents, as new information becomes available.

(HWMA/RCRA TSA IS Document; HWMA/RCRA Permit)

NOTE: *When transporting nonstandard size waste containers, the total number of containers that can be safely transported can be determined by taking the equivalent of the limits given below.*

3.1.17 The maximum waste load allowed on a transport vehicle is:

- One hundred and fifty 55-gal drums

OR

- Fifteen 4 × 4 × 7-ft boxes.

(RPT-DSA-02)

3.1.18 At no time shall a fossil-fuel fired piece of equipment be left unattended in any Type I/Type II Storage Module or in the TSA Retrieval Enclosure (TSA-RE) Pad 2 where hydraulic oil drums are located.

3.1.18.1 The person responsible for operating the vehicle shall be responsible for ensuring that it is not left within the building, if the building is going to be unoccupied.

3.1.19 Each vehicle/equipment in the TSA-RE and Type I and II modules shall have a total fuel capacity less than or equal to 160 gal.

(RPT-ESH-01; RPT-TSR-03, SAC 5.2.11)

3.1.20 Starting a cold truck in WMF-629 through WMF-633 may trigger linear beam due to excessive smoke.

3.1.21 All runners that fall off of FRP boxes during characterization, movements, or storage of the FRP boxes shall be disposed of as low-level waste (LLW) if not reattached to the original box.

3.1.22 Items that come in direct contact with uncontainerized polychlorinated biphenyls (PCBs) shall not be removed from the storage unit area unless they have been decontaminated in accordance with INST-OI-88, Spill/Leak Response and Cleanup.

(40 CFR 761.65 [c] [4])

3.1.23 Non-AMWTP waste containers must be segregated/separated from AMWTP waste and other non-AMWTP (generated from a different site) waste containers during storage, transportation, and processing unless otherwise approved by the Environmental Compliance manager.

(HWMA/RCRA Permit)

3.1.24 Non-AMWTP and AMWTP waste may be packaged and stored in the same payload in preparation for transportation. If the containers are being placed back into storage outside of a payload configuration, they must be segregated.

(HWMA/RCRA Permit)

3.1.25 Wrapped FRP boxes with plywood sheeting weighing <4,900 lb may be lifted from the plywood sheeting as long as the forks are within 3/4 in. of a box skid.

(EDF-0364)

3.1.26 Loading and unloading of waste containers outdoors must not be conducted during severe weather conditions (e.g., sustained high winds in excess of 30 mph, lightning storms, and blizzards). The PSM will evaluate conditions when necessary.

3.1.27 When loading/unloading materials/containers from a flatbed truck with side rails, the operator must ensure the T-Bar is removed or positioned below the bed of the vehicle, as applicable.

3.1.28 *Free fossil fuel* (see def.) greater than 0 gal up to 40 gal shall not be permitted in the TSA-RE unless approved by the fire marshal.

(RPT-ESH-01)

3.1.29 Free fossil fuel greater than 40 gal shall not be allowed into the TSA-RE or Type I or Type II modules.

(RPT-TSR-03, SAC 5.2.11)

3.1.30 All fissile-material-bearing waste containers entering the AMWTF shall meet the AMWTF ^{239}Pu FGE entry requirements (i.e., ≤200 ^{239}Pu FGE/ 55-gal drum or larger and ≤325 ^{239}Pu FGE/box).

(RPT-NFCS-07, CWR 18; RPT-NFCS-11, CWR #2)

3.1.31 All fissile-material-bearing waste drums entering the AMWTF shall be 55 gal or larger (i.e., any drums less than 55 gal shall be placed in a 55-gal drum or larger).

(RPT-NFCS-07, CWR 19)

3.1.32 Containers lacking a valid assay result, including those containers awaiting expert review, shall not be accepted into the AMWTF for processing.

(RPT-NFCS-07, CWR 17; RPT-NFCS-11, CWR #1)

3.1.33 Refueling of vehicles and equipment within the TSA-RE Retrieval Contamination Enclosure (RCE) shall be conducted in accordance with INST-OI-107, Refueling Equipment in the Retrieval Contamination Enclosure.

3.1.34 Personnel shall stay clear of roller conveyors if not directly involved in loading/unloading operations.

3.1.35 MacroPack containers, either empty or filled, shall be stored in planar array only.

(RPT-ESH-01)

3.1.36 Hoisting and rigging performed as part of this procedure shall meet the requirements of MP-CMNT-10.8, Hoisting and Rigging.

3.1.37 Propane power forklifts shall not be left unattended for greater than 2 hr with the propane bottle installed on the forklift. During non-use hours, the forklift must be removed from the building or the propane tanks must be removed from the forklift and stored outside the building if the forklift is going to be parked in the building (for example, during inclement weather).

3.1.38 In areas of low lighting, items such as the following shall be considered to improve lighting in the work area:

- Portable light station, flashlights, extension lights, etc.
- Opening roll-up doors, personnel access doors, hatches, etc., during daylight hours.

NOTE: *A safety data sheet (SDS) is equivalent to a material safety data sheet (MSDS) as far as 29 CFR 1910.1200, Hazard Communication, is concerned and may be substituted for a MSDS for use of the same product.*

3.1.39 Before using chemicals (such as spray adhesives, construction adhesives, sealants, etc.), the MSDS for the chemical shall be reviewed **AND** appropriate personal protective equipment (PPE) shall be selected and used.

3.1.40 If drum closure is suspect, operators may use a torque wrench to ensure proper drum closure to 60 ft-lb.

3.1.41 Metal and wood storage pallets are not rated for dynamic loading that would occur if they are used to transport loaded waste containers from one location to another. Personnel shall not use metal or wood pallets to transport loaded waste containers.

3.1.42 Due to very rough surfaces in the TSA-RE, operators shall not use 85-gal Walden drum handlers to move drums within the TSA-RE.

3.2 Prerequisites

3.2.1 The ventilation is in operation in buildings where operations are being conducted, unless prior approval has been obtained from IS/IH and RCSS and conditions for the approval are documented in Electronic Shift Operations Management System (eSOMS).

3.2.2 One Class D fire extinguisher has been placed at each overhead access door where pyrophoric materials are managed (including the WMF-636, Pad R warehouse overhead access door).

(HWMA/RCRA TSA IS Document; HWMA/RCRA Permit)

3.2.3 Hoisting and rigging equipment have a current inspection, and tie-down straps and cargo nets have been inspected prior to use.

3.2.4 Prior to commencing waste handling operations in a building, all storage areas for that building have been posted for Criticality Safety requirements.

(EDF-0034, CWR 7.3.12)

3.2.5 Prior to commencing waste handling operations in a building, it has been verified that the fire systems are operable.

3.2.5.1 If alarms are on the panel, the SS has been contacted and compensatory actions have been put in place to continue waste handling operations.

3.2.6 A pre-job brief has been performed in accordance with MP-COPS-9.17, Performing Pre-Job Briefings and Post-Job Reviews, as directed by the SS prior to performing work in this procedure.

4.0 INSTRUCTIONS

4.1 General Instructions

NOTE: *Authorization to use Form-1089 comes from operations manager/operations lead, SS, WTS subject matter expert, Environmental, and Criticality Safety.*

4.1.1 **IF** WTS is inoperable (i.e., will **NOT** perform its intended function after extensive trouble shooting to repair the system),
THEN prior to each container move, obtain authorization to use Form-1089.

4.1.1.1 SS: **WHEN** WTS is restored,
THEN ensure that container tracking information has been manually entered into WTS using the "Manual Move" screen.

4.1.2 Ensure that accessibility to communication and alarm systems within MWMUs is maintained at all times.

(HWMA/RCRA Permit; HWMA/RCRA TSA IS Document)

4.1.3 Store all pyrophoric materials in a designated pyrophoric materials storage area per the following:

NOTE 1: *Fire retardant plywood is not considered a combustible material*.

NOTE 2: *Non-fire retardant plywood used as a spacer in the storage array is not considered a combustible material.*

- Farther than 10 ft away from a row of containers containing combustible material (e.g., a container made of plywood, cardboard, FRP)
- Farther than 10 ft away from other combustible materials, such as operational supplies.

(HWMA/RCRA Permit; HWMA/RCRA TSA IS Document)

4.1.3.1 SS: Notify the PSM prior to moving pyrophoric materials.

4.1.3.2 SS: Notify the PSM of the location of each new row containing pyrophoric materials.

4.1.3.2.1 PSM: Notify the INL Fire Department of the location of each new row containing pyrophoric materials.

(HWMA/RCRA Permit; HWMA/RCRA TSA IS Document)

4.1.3.3 SS: Ensure containers identified as pyrophoric material are only stored in WMF-632, WMF-634, or WMF-636 (Pad-1, Pad-2, and Pad-R).

NOTE*:* *Move sheets (Form-1829, Production Planning Non-Facility Move Sheet; Form-1830, Production Planning Checks for Boxes to WMF-676; or Form-2017, Production Planning Checks for Direct Feed Drums to WMF-676) are generated by Integrated Production Planning personnel to ensure the correct waste containers are specified to be moved to the correct location.*

4.1.4 Ensure a move sheet is obtained for all waste movements except for the following:

- General retrieval activities in WMF-636 on Pad 1 and Pad R and initial placement of waste into a storage row on Pad 1 and Pad R
- Receipt of offsite waste and initial placement of waste into a storage row
- Waste containers being moved to and from characterization processes with the exception of WMF-628 DTF, WMF-635 DRF, and drum coring
- High FGE containers being moved to an ISA
- Certified payload containers located in WMF-635 for payload assembly purposes only
- Assembled payloads that are being moved to a storage location or to WMF-618/-635 for loading into a TRUPACT
- Shredder boxes, BR-90 bins (Bull Run boxes), and 100-gal product drums being exported from WMF-676 for initial placement in storage/characterization rows

- Recovery from upset condition with PSM concurrence
- LLW/mixed low-level waste (MLLW) payload containers located in WMF-636, Pad 2, for shipment/payload assembly purposes only
- Waste container being moved to and from related processes between buildings (for example, Central Characterization Project [CCP] characterization processes in WMF-610 and WMF-628, or six-drum overpack [SDOP] boxes or metal overpacks [MOP] to WMF-634 for assay)
- Removing and/or re-sequencing (remove, stage, and then place in a different order) box(es) on the WMF-676 box import trailer and conveyor.

4.1.5 **IF** WTS pop-up shows radiological data have not been entered into WTS, **THEN** perform the following:

4.1.5.1 Notify the SS and RCSS.

4.1.5.2 Stage the container in an accessible location to allow for the RCSS to direct appropriate action and have the data updated in WTS.

4.1.6 Contact the RCSS before cutting the lifting hoops from any M-III/IV bins.

NOTE: *Removed portions of the hoops should remain with the M-III/IV bin.*

4.1.7 Ensure that lifting hoops on M-III / M-IV bins have been cut off to below the lids prior to box assay processing, overpacking per INST-OI-84, or loading bins into the AMWTF.

NOTE: *Sections listed in the following table may be performed concurrently.*

4.1.8 **GO TO** the appropriate section from the following table according to the task to be performed,
THEN RETURN TO this step, if further activities will be performed:

Task	Section
Removing Containers from Storage Array or Process	4.2
Labeling Containers	4.3
Waste Container Transport	4.4
Waste Container Storage	4.5
Outside Storage Area Requirements	4.6
Toaster Cover Installation	4.7
Preparing Boxes for Facility Feed	4.8
Loading Transport Trailers Docked to WMF-676	4.9
Unloading Transport Trailers Docked to WMF-676	4.10
Loading/Unloading Shredder Boxes	4.11
Post Performance Activities	4.12
Post-Job Review	4.13
Abnormal and Infrequent Operations	4.14

4.2 Removing Containers from Storage Array or Process

NOTE 1: *Steps in this section may be performed concurrently.*

NOTE 2: *The drum collar may be removed for overpacking, replacement, decontamination, assay, or other activities if approved by Criticality Safety.*

4.2.1 **IF** moving *isolation containers* (see def.),
THEN ensure the spacing and stacking prevention devices remain attached to the drum.

4.2.1.1 Ensure all fissile material has a minimum of 3-ft spacing from any isolation container arrays.

4.2.1.2 Ensure that loaded isolation containers are **NOT** intermixed with any other container type in staging or stored arrays.

(RPT-NFCS-15, CWR 6, 12, 13)

4.2.2 **IF** moving newly-generated waste 55-gal drums,
THEN visually inspect the drums for proper closure (the locking nut on the bolting ring is secured against the unthreaded lug, as required by manufacturer instructions).

4.2.2.1 **IF** the container is **NOT** properly closed,
THEN STOP WORK
AND notify SS for proper disposition.

4.2.3 **IF** no legible AMWTP barcode labels are on a waste container,
THEN notify the SS.

4.2.4 **IF** two or more AMWTP barcode labels with different barcode numbers are on the container,
THEN notify the SS.

4.2.4.1 SS or Designee: **IMMEDIATELY GO TO** Step 4.14.12 to generate an NCR against the affected barcode numbers **WITHOUT RETURNING TO** this step.

4.2.5 **IF** more than one container is identified with the same AMWTP barcode label identification numbers,
THEN notify the SS.

4.2.5.1 SS or Designee: **IMMEDIATELY GO TO** Step 4.14.12 to generate an NCR against the container **WITHOUT RETURNING TO** this step.

(RPT-TSR-03, LCO 3.6)

4.2.6 Scan in AMWTP barcode label.

(HWMA/RCRA Permit; HWMA/RCRA TSA IS Document)

4.2.6.1 **IF** WTS indicates that container is >380 FGE,
THEN STOP
AND notify SS.

4.2.6.1.1 **GO TO** Section 4.14.6 and proceed as directed;
WITHOUT RETURNING TO this step.

(EDF-0034, CWR 7.3.2)

4.2.6.2 **IF** WTS indicates the container requires an acceptable knowledge (AK) inspection,
THEN contact the SS.

4.2.6.2.1 Notify Integrated Production Planning of the need for an AK inspection.

NOTE: *If Production Planning is unavailable, the location will be identified by the PSM.*

4.2.6.2.2 Segregate container for AK inspection in a location identified by Integrated Production Planning.

4.2.6.3 **IF** the handheld scanner indicates an NCR exists against a container
AND the container in question is **NOT** currently tagged,
THEN notify the SS.

4.2.6.3.1 SS: Access the TrackWise database to determine the NCR description(s),
THEN direct OT to complete one NCR tag for each open NCR associated with that container.

4.2.6.3.2 Attach applicable NCR tag(s) in accordance with MP-Q&SI-5.4, Identification of Nonconforming Conditions, on the container.

4.2.6.3.3 Notify the SS that the tag(s) was/were attached to the container.

4.2.6.3.4 SS: Update the TrackWise database for each NCR tag.

4.2.6.4 **IF** the handheld scanner indicates that no NCR exists against the container
AND the container is tagged with a red AMWTP QA NCR tag**,**
THEN notify the SS.

4.2.6.4.1 SS: Determine through the TrackWise database if there are open NCRs for the container.

4.2.6.4.1.1 SS: **IF** no open NCRs exist,
THEN direct OT to remove the NCR tag(s).

4.2.6.4.1.2 SS: **IF** there is an open NCR,
THEN STOP WORK
AND notify the PSM.

4.2.7 SS**: IF** the mobile crane will be used to move containers in the Type II modules,
THEN initiate a fire impairment
AND take linear beam smoke detectors out of service.

NOTE: *When moving drums, the visual inspection should include an assessment of drum closure prior to moving the drum.*

4.2.8 Perform a visual inspection of the container being moved to ensure structural soundness.

(HWMA/RCRA Permit; HWMA/RCRA TSA IS Document)

4.2.8.1 **IF** the container is **NOT** structurally sound,
THEN notify the SS.

(EDF-0034, CWR 7.3.5)

4.2.8.2 SS: Notify IS/IH and RCSS.

4.2.9 **IF** a drum is labeled “Parrot Beak Handler Only,”
THEN use either a Parrot Beak handler or a clamshell lifting attachment, as necessary.

4.2.10 Ensure a contamination survey is performed on all Sandia boxes (except Sandia boxes that have a “toaster cover”) prior to movement, or as soon as accessible.

NOTE: *When moving drums with a Waldon drum handler, use of a spotter for the first through third levels is at the discretion of the OT who is removing the container from storage.*

4.2.11 **WHEN** using a Waldon drum handler,
THEN ensure a spotter is present prior to removing a container from the fourth or fifth level of a stack.

NOTE: *When using a Parrot Beak handler, the spotter should assess drum closure after the Parrot Beak is engaged with the drum.*

4.2.12 **WHEN** using a Parrot Beak drum handler,
THEN ensure a spotter is present to verify proper engagement of the Parrot Beak prior to removing a drum from a location.

4.2.13 Remove the designated container from the storage location.

4.2.13.1 Inspect the area/container for signs of leakage.

(HWMA/RCRA Permit; HWMA/RCRA TSA IS Document)

NOTE: *Exemptions to the following requirement include process areas where compliant storage locations do not have "x, y, z" coordinates (e.g., gas-generation testing [GGT] staging, WMF-610 Areas 1 and 2).*

4.2.14 **IF** container is **NOT** in process (e.g., staged on a vehicle, payloads, payload drums, in a process machine, or as approved by SS),
THEN ensure container is in an x, y, z location before shift ends.

(HWMA/RCRA Permit)

4.2.15 **IF** NCR postings have been moved to facilitate waste movement,
THEN ensure that the NCR postings have been replaced as required by MP-PRPL-22.1, Production Planning.

4.3 Labeling Containers

NOTE 1: *Additional labels are affixed to/removed from containers as new information becomes available.*

(HWMA/RCRA Permit; HWMA/RCRA TSA IS Document)

NOTE 2: *LST-ISIH-03, Beryllium Contaminated Waste List, may be used to identify containers that require an IS/IH "Beryllium Danger" label.*

NOTE 3: *All containers identified with a ^{239}Pu FGE greater than 380, are physically distinguished with a "High FGE" label.*

(EDF-0034, CWR 7.3.2)

NOTE 4: *Reprinting of AMWTP barcode labels need not be performed simply to meet the labeling specifications in the table below if two or more AMWTP barcode labels are on the container. Reprinting of AMWTP barcode labels is performed to meet AMWTP barcode labeling specifications as identified in approved operating instructions (e.g., INST-OI-62, Mixed/Radioactive Waste Receipt and Transfer, container import to Treatment Facility per INST-OI-11.).*

4.3.1 Ensure containers are labeled per the following table, as required:

Type/Labels	55-gal Drum	83-/85-gal Drum	100-/110-gal Drum	Box/Cargo/ SOP/MOP	SWB
Barcode	Six labels below the bottom rolling hoop	Six labels 10 in. above the bottom of drum	Eight labels center between middle and bottom rolling hoop	Two horizontal labels on long axis, approximately in the middle, 4 to 12 in. above bottom edge of container, including skids. Two vertical labels on short axis, 2 ft up from bottom edge and 1 ft in from left edge.	Two labels, one on each flat side

Type/Labels	55-gal Drum	83-/85-gal Drum	100-/110-gal Drum	Box/Cargo/ SOP/MOP	SWB
High FGE >380 (at 1-sigma FGE value)	Two labels 180 degrees between middle and top rolling hoop	Two labels 180 degrees between middle and top rolling hoop	Two labels 180 degrees between middle and top rolling hoop	Two labels in center, one on each side of the long axis	Two labels in center, one on each side of the long axis
Radioactive Material	One label between middle and top rolling hoop	One label between middle and top rolling hoop	One label between middle and top rolling hoop	One label on side of the long axis	One label on side of the long axis
Hazardous Waste	One label between middle and top rolling hoop	One label between middle and top rolling hoop	One label between middle and top rolling hoop	One label on side of the long axis	One label on side of the long axis
PCB	Two 6-in. PCB labels opposite each other	Two 6-in. PCB labels opposite each other	Two 6-in. PCB labels opposite each other	Four labels one on each side	Two labels, one on each flat side
Beryllium	One label between middle and top rolling hoop	One label between middle and top rolling hoop	One label between middle and top rolling hoop	One label on side of the long axis	One label on side of the long axis
>700 lb	Three labels placed on each drum approximately 120 degrees apart below the middle rolling hoop.	Three labels placed on each drum approximately 120 degrees apart below the middle rolling hoop	Three labels placed on each drum approximately 120 degrees apart below the middle rolling hoop	N/A	N/A
>4,000 lb	N/A	N/A	N/A	Two labels in center, one on each side of the long axis	Two labels in center, one on each side of the long axis
Repaired Container	Two labels 180 degrees apart underneath top rolling hoop	Two labels 180 degrees apart underneath top rolling hoop	Two labels 180 degrees apart underneath top rolling hoop	Four labels one on each side of the box	Four labels one on each side of the box

Type/Labels	55-gal Drum	83-/85-gal Drum	100-/110-gal Drum	Box/Cargo/ SOP/MOP	SWB
Parrot Beak Handler Only	Two labels 180 degrees apart below middle rolling hoop	Two labels 180 degrees apart below middle rolling hoop	N/A	N/A	N/A
Do NOT Stack (see def.)	Two labels 180 degrees between middle and top rolling hoop	Two labels 180 degrees between middle and top rolling hoop	Two labels 180 degrees between middle and top rolling hoop	Two labels in center, one on each side of the long axis	Two labels in center, one on each side of the long axis
Elevated Dose Rate	Two labels 180 degrees between middle and top rolling hoop	Two labels 180 degrees between middle and top rolling hoop	Two labels 180 degrees between middle and top rolling hoop	Two labels in center one on each side of the long axis	Two labels in center one on each side of the long axis
> WAC FGE (at 1-sigma FGE value) (Drums >200 FGE and <380 FGE; Boxes >325 FGE and <380 FGE)	Two labels 180 degrees between middle and top rolling hoop	Two labels 180 degrees between middle and top rolling hoop	Two labels 180 degrees between middle and top rolling hoop	Two labels in center, one on each side of the long axis	Two labels in center, one on each side of the long axis
Potential Pyrophoric Materials	Two labels 180 degrees between middle and top rolling hoop	Two labels 180 degrees between middle and top rolling hoop	Two labels 180 degrees between middle and top rolling hoop	Four labels one on each side	Two labels, one on each flat side
LLW/MLLW	One label between middle and top rolling hoop	One label between middle and top rolling hoop	One label between middle and top rolling hoop	One label on side of the long axis	One label on side of the long axis

(EDF-0034, CWR 7.3.2; HWMA/RCRA Permit; 40 CFR 761)

4.3.1.1 **IF** new AMWTP barcode labels must be reprinted for a container,
THEN perform the following:

4.3.1.1.1 Check that at least one legible AMWTP barcode label is on the container before reprinting.

(RPT-TSR-03, SAC 5.2.8)

4.3.1.1.1.1 **IF** no legible AMWTP barcode labels are on the container,
THEN notify the SS.

4.3.1.1.2 Reprint desired number of barcode labels for the container using the handheld barcode scanner.

4.3.1.1.3 Ensure reprinted AMWTP barcode label(s) match the labels on the container.

4.3.1.1.4 Apply the reprinted AMWTP barcode label(s) to the container.

4.3.1.1.5 Using "eyes on," verify that all AMWTP barcode label identification numbers on each container are identical.

(RPT-TSR-03, SAC 5.2.8)

NOTE 1: *On the Barcode Compare application display, barcode cells highlighted GREEN indicate that the barcode numbers match. A cell highlighted RED indicates a barcode number that does not match previous barcode number(s).*

NOTE 2: *A good practice to ensure all barcode labels on a drum or box/MOP are scanned with the Barcode Compare application is to start at the drum closure bolt or seam (for drums), or a mark made on the side of a box/MOP, and go around the drum or box/MOP until the closure bolt/seam/mark is reached.*

4.3.1.1.6 Using the Barcode Compare application on the hand-held barcode scanner, verify that all AMWTP barcode label identification numbers on each container are identical, as indicated by GREEN entries on the application.

4.3.1.1.7 **IF** there are two or more AMWTP barcode labels with different barcode numbers on the container, as indicated by a red entry on the application or identified by "eyes on,"
THEN immediately notify the SS.

4.3.1.1.7.1 SS or Designee: IMMEDIATELY **GO TO** Section 4.14.12 **WITHOUT RETURNING TO** this step.

4.3.1.1.8 Document verification on Form-2165, Verification of Barcode Labels.

4.4 Waste Container Transport

NOTE: *Engineering controls in WTS prevent containers with liquids from being received to Pad 2 of WMF-636 unless the row is identified in WTS as having secondary containment.*

CAUTION

Moving long trailers without adequate clearance could damage RCRA flooring at the door threshold.

4.4.1 Ensure tractor trailer combination has sufficient height to clear the door threshold.

NOTE: *NMC-Wollard Tugs are not used for moving facility feed trailers.*

4.4.2 Ensure only AG Mercury Tugs are used for moving the facility feed trailers.

4.4.3 Ensure the lid restraint is installed prior to movement of an unvented bulged container.

4.4.4 Load the container(s) onto the transport vehicle, as needed.

NOTE: *10 CFR 835.405[e], Receipt of Packages Containing Radioactive Material states: "Monitoring pursuant to § 835.405(b) is not required for packages transported on a DOE site which have remained under the continuous observation and control of a DOE employee or DOE contractor employee who is knowledgeable of and implements required exposure control measures." The person attending the load is responsible to enforce this.*

4.4.5 **WHEN** transporting waste containers,
THEN do **NOT** leave the load unattended OUTSIDE a posted radiation area.

(10 CFR 835.405[e])

NOTE: *Exceptions to the following requirement are the transporting of shredder boxes to/from WMF-676 and the loading/unloading of drums/boxes to WMF-676.*

4.4.6 **IF** forklift is being used to transport material/containers outside of the waste storage buildings,
THEN secure all loads to the mast backrest of the forklift used.

4.4.7 Have a spotter accompany all forklifts that are being used to transport material/containers outside of waste storage buildings to ensure the path is free of obstacles and hazards.

4.4.8 **WHEN** transporting waste containers, including empty containers, using a bobtail truck or a trailer,
THEN ensure the truck/trailer bed is inspected for visible ice and the ice removed, as appropriate.

4.4.8.1 Physically touch the deck (with a gloved hand) to determine if a layer of ice is present.

4.4.8.2 **IF** any ice is present on the area of the trailer where waste will be stored,
THEN do **NOT** use the trailer to transport waste until the ice/snow has been removed.

4.4.9 **WHEN** transporting boxes, including empty boxes, on a bobtail truck or a trailer,
THEN tie down box(es) to the trailer, using a minimum of two straps (*four legs* [see def.]) per box with the capacity of each strap rated at a minimum 3,000 lb working load limit (WLL).

(EDF-0737)

4.4.9.1 **IF** the box(es) has sharp edges,
THEN ensure softeners are employed to preclude damage to straps.

4.4.9.2 **IF** the structural integrity of a box is in question (e.g., repaired FRP),
THEN use tie-down straps (rated at a minimum 3,000 lb WLL) and cargo nets, if necessary.

4.4.9.3 **IF** total static weight of all the boxes exceeds half the Gross Vehicle Capacity Rating,
THEN stagger or center placement of boxes.

4.4.10 **WHEN** transporting TRUPACT payloads between buildings,
THEN secure TRUPACT payloads to transport pallets using cargo nets and four legs with a minimum of 3,000-lb capacity.

(EDF-0737)

4.4.11 **IF** moving isolation containers,
THEN ensure the spacing and stacking prevention devices remain attached to the drum.

4.4.11.1 Ensure all fissile material has minimum of 3-ft spacing from any isolation container arrays.

4.4.11.2 Ensure that loaded isolation containers are not intermixed with any other container type in staging or stored arrays.

(RPT-NFCS-15, CWR 6, 12, 13)

4.4.12 Transport the container(s) to the desired location.

4.4.13 **WHEN** moving waste into WMF-634,
THEN ensure that TRU waste containers are **NOT** staged within 25 ft of the box-assay chamber while box assay is in progress.

4.5 Waste Container Storage

NOTE: *Steps in this section may be performed in any sequence required to meet operational needs.*

4.5.1 **IF** moving container to a CERTIFIED storage location and the container has a valid AMWTP NCR, CCP NCR, or CCP Vendor Project Manager (VPM) Administrative Hold tag,
THEN STOP
AND notify SS.

4.5.1.1 Ensure bags and plastic wrapping materials used as containers (i.e., plastic wrapped metal pallets, etc.) are **NOT** intermixed with the general population of containers.

(HWMA/RCRA Permit; HWMA/RCRA TSA IS Document)

4.5.2 **IF** the handheld barcode scanner indicates an incompatible when receiving to "x, y, z" coordinates,
OR the container has a potentially incompatible *item description code* (IDC; see def.) per the following table,
THEN STOP
AND notify the SS.

NOTE: *IDCs that are not listed in the following table are considered compatible with all waste, including waste that is included in this table, with the exception of pyrophoric materials.*

Waste Type	General Waste Description
Acids	ID-150: Laboratory Waste MD-805: Asbestos Filters MD-813: Glass Filters and Fiberglass MD-834: High Level Acid RF-241: Americium Process Residue

Waste Type	General Waste Description
Oxidizers	ID-005: Evaporator Salts Retrieved RF AE-100: General Plant Waste MD-805: Asbestos Filters MD-811: Evaporator and Dissolver Sludge MD-813: Glass Filters and Fiberglass MD-834: High Level Acid RF-005: Evaporated Salts RF-241: Americium Process Residue RF-430: Resin, Ion Column-Unleached RF-745: Pits 11 & 12 Evaporator Salts SD-703: Inorganic Sludge
Caustics	MD-835: High Level Caustic
Halogenated Organics	RF-003: Organic Setups, Oil Solids RF-700: OASIS Waste RF-801: Solidified Organics BN-501: AMWTP PCB Soil BN-518: TRU Supercompactor Squeezants BN-526: Sample Returns BN-528: TRU PCB Liquids Generated During Retrieval BN-603: Absorbed Analytical Liquids BN-605: Absorbed Liquids TSCA/PCB RF-743: Pits 11 & 12 Organic Setups RF-746: Pits 11 & 12 Pad Oil Drums SD-704: Organic Sludge SD-705: Debris SD-706: Soil UN-00A: Undefined Homogeneous Solids
Unknowns	PC-000: “True” or Post-RTR Unknown
Pyrophoric Materials	RF-751: Roaster Oxide RF-999: Potential Roaster Oxide
Heterogeneous Debris	RF-998: Heterogeneous Debris
Heterogeneous Debris	IW-179: Early Waste Retrieval Heterogeneous Debris

(HWMA/RCRA Permit; HWMA/RCRA TSA IS Document)

4.5.3 Handle containers with potential incompatible IDCs per Section 4.14.5.

(HWMA/RCRA Permit; HWMA/RCRA TSA IS Document)

4.5.4 Do **NOT** store waste containers with the following LLW IDCs in the same storage arrays as MLLW/TRU IDCs.

- BN619
- BN624
- BN625
- BN531
- BN631
- BN636
- BN637

(DOE M 435.1-1)

4.5.5 **IF** container is found to be out of round and is **NOT** labeled "Parrot Beak Only,"
THEN apply "Parrot Beak Only" label.

4.5.6 Ensure that out-of-round drums with significant surface defects are placed on top of a stack or planar array.

(EDF-0075)

4.5.7 **IF** a drum is labeled "Parrot Beak Handler Only,"
THEN use either a Parrot Beak handler or a clamshell lifting attachment, as necessary.

(EDF-0075)

WARNING

Failure to wear the appropriate PPE during spacer/plywood lifting activities may result in injury.

4.5.8 Don leather gloves and safety glasses during spacer/plywood lifting activities.

4.5.8.1 **WHEN** activities are above shoulder level,
THEN don a hardhat.

4.5.9 **WHEN** placing/removing a full drum spacer or sheet of plywood on the first level of a waste stack,
THEN use two OTs to place/remove the spacer or plywood, as necessary.

4.5.10 **WHEN** placing/removing a drum spacer or sheet of plywood on any level above the first level,
THEN use a forklift to raise/lower the spacer/plywood to the stack.

4.5.10.1 Lift only one drum spacer or sheet of plywood at a time, either by laying it flat on the forklift tines or on a pallet, cradling on a Parrot Beak handler, or hanging from the drum handler tines.

4.5.11 Ensure a contamination survey is performed on all Sandia boxes (except Sandia boxes that have a "toaster cover"), prior to movement, or as soon as accessible.

NOTE 1: *Waste containers of the same type (i.e., 55/83/85 gal) may have sufficient differences in drum height that if stacked together, could cause the stack to become unstable.*

NOTE 2: *The 83-/85-gal drums (including those with "nesting" bottoms) may be safely stacked (maximum of three high) using a plywood sheet that is at least 1/2-in. thick (nominal) between layers in rows that are at least two wide with an array depth of two drums.*

(EDF-0041; EDF-0273)

NOTE 3: *The 100-gal product drums may be safely stacked (maximum three high) using a plywood sheet at least 1/2-in. thickness (nominal) between layers in rows that are at least two wide and with an array depth of at least two drums. This array is applicable to drums with drums stacked on top of them.*

(EDF-0266)

NOTE 4: *The 85-gal overpack drum arrays can be stacked four high and maintain stability in all cases with the following restriction: If heavier drums are placed on top of a lighter drum, the weight difference cannot be greater than 200 lb when stacking with plywood spacers.*

(EDF-0273)

4.5.12 **WHEN** stacking drums,
THEN ensure that each level of drums on a pallet is similar in drum height to ensure proper drum spacer ring engagement and seismic stability of the waste stack.

(EDF-0266)

4.5.13 Ensure that 55-/83-/85-/110-gal drums weighing ≥700 lb are **NOT** placed above Level 2 while in storage.

(EDF-0266)

4.5.14 **WHEN** stacking on plywood,
THEN ensure drums are less than 3 in. off-center vertically.

(EDF-0266)

NOTE: *The preferred method for stacking is to use seismic spacers, when practical.*

4.5.15 **WHEN** stacking/unstacking containers using plywood as spacers,
THEN ensure that the aisles surrounding the work area(s) are posted and access controlled.

(HWMA/RCRA TSA IS Document)

4.5.16 **IF** any part of the storage array is stacked,
THEN do **NOT** intermix boxes and drums.

(HWMA/RCRA Permit)

NOTE: *Use of a spotter for the first through third levels is at the discretion of the OT who is placing the drum into storage.*

4.5.17 Ensure a spotter is present prior to placing a drum into the fourth or fifth level of a stack.

NOTE: *Use of a spotter for the first and second levels is at the discretion of the OT who is placing the box into storage.*

4.5.18 Ensure a spotter is present prior to placing a box into the third or fourth level of a stack.

4.5.19 **IF** stacking FRP/Sandia boxes on cribbing,
THEN perform the following:

4.5.19.1 Stack the box at the bottom of the stack so that it is supported by at least four 4 × 4, or equivalent (i.e., two 2 × 4) cribbing members.

4.5.19.2 Stack the other boxes in the stack so they are supported by at least three 4 × 4, or equivalent (i.e., two 2 × 4) cribbing members.

4.5.19.3 **IF** using cribbing,
THEN place the 4 × 4, or equivalent (i.e., two 2 × 4) cribbing as follows:

- Spaced adequately to support box stacking between boxes and/or pallets
- For Sandia boxes only, runs longer than the depth of the box and extends past the front and back outside edges of each box.

4.5.19.4 **IF** using 5-ft tines,
THEN use caution so as **NOT** to puncture the boxes behind the boxes being moved.

(EDF-0195)

4.5.19.5 Do **NOT** stack boxes on cribbing with major deformations that could cause the box stack to lean or tip over.

(EDF-0195)

4.5.19.6 Stack external ribbed FRP boxes a maximum of three high with no more than 4,000 lb stacked on the bottom external ribbed FRP box.

(EDF-0066)

4.5.19.6.1 Stack a maximum of three high, external-ribbed FRP boxes on top of an external-flush FRP or a metal box.

4.5.19.7 **WHEN** stacking an FRP box,
THEN ensure that more than 2/3 of each skid/cribbing board makes contact with the box it is sitting on.

(EDF-0066)

NOTE: *Properly stacked boxes are straight and not hanging over the edge of the lower box.*

(EDF-0066)

4.5.19.7.1 **IF** the lower box is an external ribbed FRP,
THEN ensure that one of the middle three top stiffener strip makes more than 2/3 contact with one of the middle skid cribbing boards of the upper box.

(EDF-0066)

4.5.20 **IF** stacking standard waste boxes (SWBs)/M-III/M-IV bins with cribbing,
THEN use cribbing that is 4 × 4 in. or equivalent (two 2 × 4s) as follows:

4.5.20.1 **WHEN** stacking SWBs,
THEN ensure the cribbing spans the top of the box near where the straight sides transition to the rounded ends.

4.5.20.2 **WHEN** stacking M-III/M-IV bins,
THEN ensure the cribbing spans the top of the box near the sides.

4.5.21 **WHEN** stacking old-style cake boxes on top of new-style cake boxes, **THEN** ensure the support runners are lined up with the ends and sides of the box below.

4.5.22 **WHEN** stacking inverted cakeboxes,
THEN perform the following:

4.5.22.1 Stack the box at the bottom of the stack so that it is supported by at least four 4 × 4 or equivalent cribbing members.

4.5.22.2 Ensure cribbing is aligned with the vertical supports of the box.

NOTE: *In the following step, "XX" indicates any of the various types of soft-sided overpacks (SOPs).*

4.5.23 Do **NOT** stack soft overpack (XXSOP) containers.

4.5.24 Do **NOT** stack SDOP or metal overpack (MOP) waste container assemblies.

4.5.25 Ensure waste is stored in the MWMUs per the following requirements:

NOTE: *Waste may be stored in any MWMU, other than Pad 1 or Pad R, one high by one wide and no more than 10 long along a wall or structure as long as a 3-ft aisle is maintained from other waste arrays.*

(HWMA/RCRA Permit; HWMA/RCRA TSA IS Document)

4.5.25.1 **WHEN** storing waste in an MWMU,
THEN ensure a 3-ft aisle space is maintained from other waste arrays or walls, unless otherwise permitted.

(HWMA/RCRA Permit; HWMA/RCRA TSA IS Document)

4.5.25.2 Ensure bags/plastic wrap containers with rigid wastes are stored no more than four wide by five high by "n" long to allow for appropriate aisle spacing requirements.

4.5.25.2.1 Ensure that a protective sheet (e.g., plywood/sheeting) or cribbing is used in between each bag/plastic wrap container layer.

(HWMA/RCRA Permit; HWMA/RCRA TSA IS Document)

TYPE II STORAGE REQUIREMENTS/LIMITS FOR *Unrestricted Storage Area* (USA; see def.)	**55-gal Drums**	**83-/85-/100-/ 110-gal Drums**	**Boxes**
FGE Value	≤380 ^{239}Pu FGE	≤380 ^{239}Pu FGE	≤380 ^{239}Pu FGE
Standard Stacking Rows	5 high × 4 wide Back row 4 high ×22 long	**83-/85-gal** 4 high × 3 wide × 18 long **100-/110-gal** 3 high × 3 wide × 16 long	4 high × 4 wide Back row 3 high 11 long
Side Pick Rows	4 high × 4 wide × 22 long	**83-/85-gal** 3 high × 4 wide × 22 long **100-/110-gal** 3 high × 3 wide × 16 long	N/A
End Rows	A and T = 5 high × 4 wide to 14 long then 3 high × 4 wide to 16 long B and S = 5 high × 4 wide to 16 long then 3 high × 4 wide to 20 long	**83-/85-gal** **A and T**: (4 high × 4 wide to 8 long then 3 high × 4 wide to 12 long) **B and S**: (4 high × 4 wide to 14 long then 3 high × 4 wide to 18 long) **100-/110-gal** 3 high × 3 wide × 12 long	**A and T**: 4 high × 1 wide to 7 long then 3 high × 1 wide to 9 long **B and S**: 4 high × 1 wide to 8 long then 3 high × 1 wide to 10 long
Repaired Container Rows	2 high × 2 wide × 22 long	**83-/85-gal** 2 high × 2 wide × 18 long **100-/110-gal** 2 high × 2 wide × 16 long	2 high × 2 wide × 11 long
Pyrophoric Materials (Stored only in WMF-632 and WMF-634)	2 high × 2 wide × *n long*	**83-/85-gal** 2 high × 2 wide × *n* long **100-/110-gal** 2 high × 2 wide × *n* long	2 high × 2 wide × 11 long

(EDF-0034, CWR 7.3.1; HWMA/RCRA Permit)

4.5.25.3 **WHEN** storing waste in WMF-635,
THEN maintain a minimum of 10-ft access aisle space (excluding support beams and portable equipment) in the payload assembly and aspiration area/waste characterization and repackaging area.

(HWMA/RCRA Permit)

4.5.25.4 **WHEN** using the TLA in WMF-635,
THEN ensure that mixed waste volumes do **NOT** exceed 238 55-gal drums or volume equivalents.

(HWMA/RCRA Permit)

4.5.25.5 Ensure all waste stored in the TLA has secondary containment (except TRUPACTs/HalfPACTs).

(HWMA/RCRA Permit)

4.5.25.6 Ensure that repaired containers are separated from the general population of waste containers.

(HWMA/RCRA Permit)

TYPE I STORAGE REQUIREMENTS/ LIMITS FOR USA	**55-gal Drums**	**83-/85-/100-/ 110-gal Drums**	**Boxes**
FGE Value	≤380 ^{239}Pu FGE	≤380 ^{239}Pu FGE	≤380 ^{239}Pu FGE
Standard Stacking Rows	5 high × 4 wide Back row 4 high 22 long	**83-/85-gal** 4 high × 3 wide Back row 4 high 18 long **100-/110-gal** 3 high × 3 wide 16 long	4 high × 1 wide Back row 3 high 11 long
Side Pick Rows	4 high × 4 wide 22 long	**83-/85-gal** 3 high × 4 wide × 22 long **100-/110-gal** 3 high × 3 wide 16 long	N/A

TYPE I STORAGE REQUIREMENTS/ LIMITS FOR USA	**55-gal Drums**	**83-/85-/100-/ 110-gal Drums**	**Boxes**
Repaired Container Rows	2 high × 2 wide 22 long	**83-/85-gal** 2 high × 2 wide 18 long **100-/110-gal** 2 high × 2 wide 16 long	2 high × 2 wide 11 long
Pyrophoric Materials	Prohibited	Prohibited	Prohibited

(EDF-0034, CWR 7.3.1; HWMA/RCRA Permit)

4.5.25.7 **WHEN** wood pallets are used for drum stacking in the TSA-RE,
THEN ensure fire-retardant pallets are used.

(HWMA/RCRA Permit; RPT-DSA-02; EDF-0338)

4.5.25.8 SS: Evaluate the waste storage rows in Pad 2 for even floor surface prior to storing waste.

(HWMA/RCRA Permit; EDF-0338)

4.5.25.9 Apply glass beads to Pad 2, as necessary, to ensure an even floor surface.

(HWMA/RCRA Permit)

4.5.25.10 Ensure that all containers on Pad 2 are stored on the asphalt or concrete pads, **NOT** over any of the soil areas.

(H**WMA/RCRA Permit)**

4.5.25.11 **WHEN** stacking drums three high on Pad 1 or Pad R,
OR five high on Pad 2,
THEN ensure spacer/plywood is used
AND drums are elevated from the surface.

(HWMA/RCRA TSA IS Document; HWMA/RCRA Permit)

4.5.25.12 **WHEN** stacking boxes three high or four high on Pad 2,
THEN ensure they are elevated from the surface using runners/cribbing/plywood, or pallets.

(HWMA/RCRA Permit)

NOTE: *The following storage requirement does not apply when on Pad 2.*

4.5.25.13 Store containers of waste a minimum of 3 ft from the edge of the original asphalt pad on Pad 1 and Pad R.

(HWMA/RCRA TSA IS Document)

4.5.25.14 Store all uncharacterized waste, with the exception of shredder boxes, on WMF-636 Pad 2 on spill pallets/pans, or in secondary containment.

(HWMA/RCRA Permit)

4.5.25.15 Ensure all stacking on the Pad 2 area follows the weight limitations in the stacking chart of Exhibit 5, Load Reference Chart.

(HWMA/RCRA Permit)

NOTE: *Product drums of supercompacted waste created from offsite waste may be stored on Pad 2 and intermixed with other product drums without restriction.*

4.5.25.16 Store only INL-generated waste and supercompacted offsite waste on Pad 2.

(HWMA/RCRA Permit; HWMA/RCRA TSA IS Document)

4.5.25.17 Do **NOT** store non-AMWTP INL waste on Pad 1 or Pad R.

4.5.25.18 Do **NOT** store uncharacterized waste (i.e., containers that do **NOT** have VE, RTR, or Waste Services e-signature closure) outside of secondary containment on Pad 1 or Pad R once the containers have been removed from Pad 1 or Pad R.

4.5.25.19 Ensure liquids are **NOT** stored on Pad 1/Pad R or Pad 2 unless they are stored in a secondary containment.

PAD 1/PAD R STORAGE REQUIREMENTS/ LIMITS FOR USA	**55-gal Drums**	**83-/85-/100-/ 110-gal Drums**	**Boxes**	**Cargo Containers**
FGE Value	≤380 ^{239}Pu FGE	≤380 ^{239}Pu FGE	≤380 ^{239}Pu FGE	≤380 ^{239}Pu FGE
Standard Stacking Rows	3 high × 2 wide × *n* long OR 1 high × 4 wide × *n* long	**83-/85-gal** 3 high × 2 wide × *n* long OR 1 high × 4 wide × *n* long **100-/110-gal** 3 high × 2 wide × *n* long OR 1 high × 4 wide × *n* long	3 high × 2 wide × *n* long	2 high × 2 wide × *n* long
Repaired Container Rows	2 high × 2 wide × *n* long	2 high × 2 wide × *n* long	2 high × 2 wide × *n* long	2 high × 2 wide × *n* long
Containers with Pyrophoric Materials	2 high × 2 wide × *n* long	2 high × 2 wide × *n* long	2 high × 2 wide × *n* long	2 high × 2 wide × *n* long

PAD 2 STORAGE REQUIREMENTS/ LIMITS FOR USA	**55-gal Drums**	**83-/85-/100-/ 110-gal Drums**	**Boxes**	**Cargo Containers**	**Interim Storage for Cargo Containers**
FGE Value	≤380 ^{239}Pu FGE	≤380 ^{239}Pu FGE	≤380 ^{239}Pu FGE	≤380 ^{239}Pu FGE	≤380 ^{239}Pu FGE
Standard Stacking Rows	5 high × 4 wide × *n* long	Using 64 × 64 pallets: 3 high × 4 wide × *n* long **100-/110-gal** 3 high × 2 wide × *n* long OR 1 high × 4 wide × *n* long	On pallet or plywood: 4 high ×4 wide × *n* long	2 high × 2 wide × *n* long	2 high × 2 wide × *n* long
Repaired Container Rows	2 high × 2 wide × *n* long	2 high × 2 wide × *n* long	2 high × 2 wide × *n* long	2 high × 2 wide × *n* long	N/A
Containers with Pyrophoric Materials	2 high × 2 wide × *n* long	2 high × 2 wide × n long	2 high × 2 wide × *n* long	2 high × 2 wide × *n* long	N/A

(EDF-0034, CWR 7.3.1; HWMA/RCRA Permit; HWMA/RCRA TSA IS Document)

WMF-610 STORAGE REQUIREMENTS/LIMITS	Drums	Boxes
FGE Value	≤380 ^{239}Pu FGE	≤380 ^{239}Pu FGE
WMF-610 SSA (Highbay) Stacking Rows (Not to exceed 108 cubic meters total)	3 high × 4 wide × *n* long 2-ft aisle between rows and walls	2 high × 4 wide × *n* long 2-ft aisle between rows and walls
Staging Areas 1 and 2 (Not to exceed 10 working days)	**55-gal** 1 high × ≤ 3 wide × ≤ 6 long **83-/85-gal** 1 high × ≤ 2 wide × ≤ 5 long	One Box 1 high × 1 wide × 1 long
North/South Loading/Unloading Airlocks	Prohibited	Prohibited
Pyrophoric Materials (in stacking rows)	2 high × 2 wide × *n* long	2 high × 2 wide × *n* long

(EDF-0034, CWR 7.3.2; HWMA/RCRA Permit)

NOTE 1: *Exhibit 1, WMF-636 Preferred Stacking Stability for Steel Drums, and Exhibit 2, WMF-636 Alternate Stacking Stability for Steel Drums, provide examples of stacking configurations for steel drums.*

NOTE 2: *Exhibit 3, Stacking Stability for 110-gal Salvage Drums Two to Five High – 3 Drums Wide per EDF-0453, and Exhibit 4, Stacking Stability for 110-gal Salvage Drums Two to Five High – 2 Drums Wide per EDF-0453, provide examples of stacking configurations for 110-gal salvage drums.*

4.5.26 Place containers into storage per the following:

4.5.26.1 Scan container into WTS storage location.

4.5.26.1.1 **IF** WTS indicates that container is >380 ^{239}Pu FGE,
THEN stop
AND notify SS.

4.5.26.1.1.1 Proceed in accordance with Section 4.14.6.

(EDF-0034, CWR 7.3.1 and 7.3.7; HWMA/RCRA Permit; HWMA/RCRA TSA IS Document)

4.5.26.2 **IF** storing drums,
THEN rotate each drum so the locking-ring bolt will **NOT** come in contact with any other drum or bolt when stored.

4.5.26.3 Place containers that have an "Elevated Dose Rate" sticker applied to them in the middle of the waste stack for dose reduction purposes, when practical.

4.5.26.4 Ensure all containers are stored in a manner that elevates them from the floor surface (e.g., pallets or risers) with the exception of Pad 1 and Pad R.

(HWMA/RCRA Permit; HWMA/RCRA TSA IS Document)

4.5.26.5 Ensure a minimum of a 20-ft access aisle space is provided down the center aisle for each Type II module.

(HWMA/RCRA Permit)

4.5.26.6 Ensure a minimum of a 20-ft access aisle space is provided for Pad 2 as follows:

- Down the north-south center of the pad
- From the overhead access door on the east side of WMF-636 to the center aisle that runs north-south of the pad.

(HWMA/RCRA Permit)

4.6 Outside Storage Area Requirements

NOTE 1: *Containers within a TRUPACT are allowed to contain up to 1% free liquids by volume and still be placed in compliant storage in the outside storage area.*

NOTE 2: *A maximum of six trailers loaded with TRUPACT/HALFPACT containers may be stored in the outside storage area.*

4.6.1 Ensure that only TRUPACT/HALFPACT containers loaded on trailers are stored in the TRUPAC outside storage area between WMF-635 and WMF-636.

(HWMA/RCRA Permit)

4.6.2 Do **NOT** store containers with free liquids at the outside storage area unless the container is located within a TRUPACT container and contains no more than 1% liquid by volume.

(HWMA/RCRA Permit)

4.6.3 Do **NOT** store trailers loaded with containers more than one wide.

(HWMA/RCRA Permit)

4.6.4 Maintain a minimum of 3 ft of aisle space between loaded trailers.

NOTE: *Aisle spacing requirements do not include portable equipment.*

4.6.5 Maintain a minimum of 5 ft of aisle space between loaded trailers with containers and the bollards surrounding the fire hydrant and fire hydrant control valve.

(HWMA/RCRA Permit)

4.6.6 Maintain a minimum of 50 ft of aisle space between the eastern row of containers in the NW outside storage area and the western exterior of WMF-636, Pad 1.

(HWMA/RCRA Permit)

4.6.7 Maintain a 20-ft perimeter access road for operational and emergency equipment along the west and north sides of the outside storage area.

(HWMA/RCRA Permit)

4.7 Toaster Cover Installation

NOTE 1: *A "toaster cover" is not used for overpacking, and not considered a repair to enhance structural integrity, but only as an encapsulating material to cover possible contamination and hazardous material/substance on containers.*

NOTE 2: *The use of a toaster cover for containment should be considered if:*

- *Paint bubbling and flaking or foreign materials*
- *Fixed contamination*
- *For best management practice in handling potential contamination or hazardous material/substance on containers.*

4.7.1 SS: **IF** installing toaster cover/encapsulating material on boxes, **THEN** notify the RCSS.

4.7.2 Check that there is at least one legible AMWTP barcode label on the container before reprinting.

(RPT-TSR-03, SAC 5.2.8)

4.7.2.1 **IF** no legible AMWTP barcode labels are on the container, **THEN** notify the SS.

4.7.3 Reprint the current AMWTP barcode labels that are on the box using a handheld barcode scanner.

4.7.4 Ensure that the four new AMWTP barcode labels match the labels on the box.

4.7.5 Place the box on plywood/false bottom if necessary and affix as applicable (construction adhesive, glue, etc.).

4.7.6 Place the toaster cover/encapsulating material over the box.

4.7.7 Using "eyes on" verify that all AMWTP barcode label identification numbers on each container are identical.

(RPT-TSR-03, SAC 5.2.8)

NOTE 1: *On the Barcode Compare application display, barcode cells highlighted GREEN indicate that the barcode numbers match. A cell highlighted RED indicates a barcode number that does not match previous barcode number(s).*

NOTE 2: *A good practice to ensure all barcode labels on a drum or box/MOP are scanned with the Barcode Compare application is to start at the drum closure bolt or seam (for drums), or a mark made on the side of a box/MOP, and go around the drum or box/MOP until the closure bolt/seam/mark is reached.*

4.7.8 Using the Barcode Compare application on the hand-held barcode scanner verify that all AMWTP barcode label identification numbers on each container are identical, as indicated by GREEN entries on the application.

4.7.8.1 **IF** there are two or more AMWTP barcode labels with different barcode numbers on the container, as indicated by a red entry on the application or identified by "eyes on,"
THEN immediately notify the SS.

4.7.8.1.1 SS or Designee: IMMEDIATELY **GO TO** Step 4.14.12
WITHOUT RETURNING TO this step.

4.7.9 Document verification on Form-2165.

4.7.10 Ensure the toaster cover/encapsulating material is taped to the bottom of the box and overlaps the plywood/false bottom.

4.7.11 If applicable, reinforce the top of the toaster cover/encapsulating material with tape to prevent tears and rips on the cover before placing cribbing.

4.7.12 Ensure that all other labels are transferred to the outside of the toaster cover/encapsulating material once the cover is installed on the box, per Section 4.3, Labeling Containers.

4.7.13 Ensure all applicable information is entered into the comments section of WTS.

4.8 Preparing Boxes for Facility Feed

4.8.1 **IF** requested by facility SS,
THEN provide plywood on box bottoms as follows:

NOTE 1: *Plywood length and width should be no longer than 1 in. past the ends and sides of the box.*

NOTE 2: *At least 4 ft × 4 in. × 1/2 in. spacers should be used with FRP boxes having 4 ft × 2 in. × 4 in. runners to allow room for forklift forks.*

NOTE 3: *Plywood is not necessary on inverted cake boxes.*

4.8.1.1 **IF** the box is an FRP,
THEN perform the following:

4.8.1.1.1 Obtain plywood of proper length and width for boxes being loaded.

4.8.1.1.2 Place plywood on box stand, cribbing, or in box trailer, as necessary.

4.8.1.1.3 Secure plywood to FRPs using screws on the corners of the plywood.

4.8.1.2 **IF** the box is a cake box or BR-90,
THEN place plywood on the box trailer rollers with box lift mechanism lowered
AND center the cake box/BR-90 on the plywood.

4.8.1.3 **IF** the box is a Sandia,
THEN perform the following:

4.8.1.3.1 Place one 4 ft × 4 in. × 4 in. crib under each end of the plywood sheet on a flat surface.

4.8.1.3.2 Center the Sandia box on the plywood sheet with the forklift
AND slide the forks out from under the box.

4.8.1.3.3 **IF** installing a toaster cover on the Sandia box,
GO TO Section 4.7, Toaster Cover Installation;
WITHOUT RETURNING TO this step.

4.8.1.4 **IF** an M-III/M-IV bin has been overpacked in a soft-sided overpack,
THEN ensure that plywood is applied to the bottom of the bin.

4.9 Loading Transport Trailers Docked to WMF-676

NOTE 1: *This section is only used to load trailers that are* semi-permanently *(see def.) docked and will be loaded using equipment (forklifts, extenda-booms, etc.) through the front of the trailer.*

NOTE 2: *During this section, a spotter will be used to help equipment operator load trailer.*

NOTE 3: *The inner child AMWTP barcode label(s) on the top of an overpack container is exempted from the mismatched label requirement.*

(RPT-TSR-03, LCO 3.6, SR 4.6.1)

4.9.1 Loading Drums onto Docked Transport Trailers (WMF-676)

4.9.1.1 Ensure containers have barcode labels placed so the barcode label is read vertically and attached as follows:

- 55-/83-/85-gal drums—At least six labels evenly spaced (at approximately 60 degree intervals) located directly under the bottom rolling hoop
- 100-gal drums—At least 8 labels evenly spaced (at approximately 45 degree intervals) centered between the two lower rolling hoops.

(HWMA/RCRA Permit)

4.9.1.2 **IF** loading direct feed or Treatment Facility unoverpacking (TFUP) drums,
THEN perform the following:

NOTE: *A manager designated by the plant manager will provide oversight of dual verification.*

4.9.1.2.1 Using "eyes on," dual verify that all AMWTP barcode label identification numbers on each container are identical.

(RPT-TSR-03, SR 4.6.1)

NOTE 1: *On the Barcode Compare application display, barcode cells highlighted GREEN indicate that the barcode numbers match. A cell highlighted RED indicates a barcode number that does not match previous barcode number(s).*

NOTE 2: *A good practice to ensure all barcode labels on a drum or box/MOP are scanned with the Barcode Compare application is to start at the drum closure bolt or seam (for drums), or a mark made on the side of a box/MOP, and go around the drum or box/MOP until the closure bolt/seam/mark is reached.*

4.9.1.2.2 Using the Barcode Compare application on the hand-held barcode scanner verify that all AMWTP barcode label identification numbers on each container are identical, as indicated by GREEN entries on the application.

4.9.1.2.3 **IF** there are two or more AMWTP barcode labels with different barcode numbers on the container, as indicated by a RED entry on the application or identified by "eyes on,"
THEN immediately notify the SS.

4.9.1.2.3.1 SS or Designee: IMMEDIATELY
GO TO Step 4.14.12
THEN RETURN TO
Step 4.9.1.2.3.2.

(RPT-TSR-03, LCO 3.6)

4.9.1.2.3.2 Do **NOT** load the container onto the import trailer.

4.9.1.2.4 Document dual verification for direct-feed or TFUP waste drums on Form-2017, Production Planning Checks for Direct Feed Drums to WMF-676.

4.9.1.2.5 Manager Providing Oversight: Sign Form-2017 to document that dual verification was performed correctly.

4.9.1.3 **IF** loading (new, empty) 100-gal drums,
THEN perform the following:

NOTE 1: *On the Barcode Compare application display, barcode cells highlighted GREEN indicate that the barcode numbers match. A cell highlighted RED indicates a barcode number that does not match previous barcode number(s).*

NOTE 2: *A good practice to ensure all barcode labels on a drum or box/MOP are scanned with the Barcode Compare application is to start at the drum closure bolt or seam (for drums), or a mark made on the side of a box/MOP, and go around the drum or box/MOP until the closure bolt/seam/mark is reached.*

4.9.1.3.1 Using the Barcode Compare application on the hand-held barcode reader and "eyes on," verify that all AMWTP barcode label identification numbers on the drum(s) are identical.

4.9.1.3.2 **IF** there are two or more AMWTP barcode labels with different barcode numbers on the container, as indicated by a red entry on the application or identified by "eyes on,"
THEN immediately notify the SS.

4.9.1.3.2.1 SS or Designee: IMMEDIATELY **GO TO** Step 4.14.12 **THEN RETURN TO** 4.9.1.3.2.2.

4.9.1.3.2.2 Do **NOT** load the container onto the import trailer.

4.9.1.3.3 Document verification for 100-gal drums on Form-2165.

4.9.1.4 **IF** loading direct feed waste drum(s) for supercompaction, **THEN** check that the waste drum(s) is vented.

4.9.1.4.1 **IF** the drum(s) is **NOT** vented,
THEN do **NOT** load the waste drum(s) onto the trailer.

4.9.1.4.2 Notify the SS.

4.9.1.4.3 SS or Designee: Generate an NCR and attach the NCR tag to the waste drum.

4.9.1.5 **IF** loading direct feed drums,
THEN ensure pans have been placed on the bottom of drum if drum rocks when set on a flat surface.

4.9.1.6 **IF** loading (new, empty) 100-gal puck drums,
THEN load only a maximum of 12 drums onto trailer.

4.9.1.7 Place MAN-OFF-AUTO switch to MAN.

4.9.1.8 Place IMPORT-EXPORT switch to IMPORT.

4.9.1.9 Open doors on the front of trailer, if necessary.

4.9.1.10 Ensure a spotter is present when loading trailer.

4.9.1.11 Manually run trailer conveyors to facilitate loading.

4.9.1.12 Load trailer with appropriate containers that are evenly spaced at about 3-in. intervals.

4.9.1.13 Once containers are loaded, manually advance them to the rear of the trailer.

4.9.1.14 Ensure IMPORT-EXPORT switch is in IMPORT.

4.9.1.15 Place MAN-OFF-AUTO switch to AUTO.

4.9.1.16 Close front doors to trailer
OR replace safety bar.

4.9.1.17 Contact control room with appropriate information on the trailer status.

4.9.2 Loading Boxes or MOP onto Docked Transport Trailers (WMF-676)

4.9.2.1 Ensure containers have unobstructed matching barcode labels and are attached as follows:

- Waste boxes—Minimum of one label located horizontally, approximately in the middle of each side of the box (on the long axis)
  - For boxes without skids, the label should be located about 4 to 12 in. above the bottom edge of the container
  - For boxes with skids, the label should be located about 4 to 12 in. above the bottom edge of the container's skids.

AND a minimum of one label located vertically on each end of the box (on the short axis) approximately 1 ft from left edge and 2 ft from bottom edge.

(HWMA/RCRA Permit)

NOTE: *A manager designated by the plant manager will provide oversight of dual verification.*

4.9.2.2 Using "eyes on," dual verify that all AMWTP barcode label identification numbers on each container are identical.

(RPT-TSR-03, SR 4.6.1)

NOTE 1: *On the Barcode Compare application display, barcode cells highlighted GREEN indicate that the barcode numbers match. A cell highlighted RED indicates a barcode number that does not match previous barcode number(s).*

NOTE 2: *A good practice to ensure all barcode labels on a drum or box/MOP are scanned with the Barcode Compare application is to start at the drum closure bolt or seam (for drums), or a mark made on the side of a box/MOP, and go around the drum or box/MOP until the closure bolt/seam/mark is reached.*

4.9.2.3 Using the Barcode Compare application on the hand-held barcode scanner, verify that all AMWTP barcode label identification numbers on each container are identical, as indicated by GREEN entries on the application.

4.9.2.4 **IF** there are two or more AMWTP barcode labels with different barcode numbers on the container, as indicated by a RED entry on the application or identified by "eyes on,"
THEN immediately notify the SS.

4.9.2.4.1 SS or Designee: IMMEDIATELY **GO TO** Step 4.14.12 to generate an NCR against the affected barcode numbers
THEN RETURN TO Step 4.9.2.4.2.

(RPT-TSR-03, LCO 3.6)

4.9.2.4.2 Do **NOT** load the container onto the import trailer.

4.9.2.5 Document dual verification for waste box(es) on Form-1830.

4.9.2.6 Manager Providing Oversight: Sign Form-1830 to document that dual verification was performed correctly.

4.9.2.7 Place MAN-OFF-AUTO switch to MAN.

4.9.2.8 Place IMPORT-EXPORT switch to IMPORT.

4.9.2.9 Open doors on the front of trailer, if necessary.

4.9.2.10 Ensure spotter is present when loading trailer.

4.9.2.11 Manually run trailer conveyors to facilitate loading.

4.9.2.11.1 Use hydraulic lifts to remove forks from under boxes, as necessary.

4.9.2.12 **IF** loading box waste containers,
THEN check that box types are listed in Appendix A, Box Sizes and Configurations.

4.9.2.12.1 **IF** box types are **NOT** listed in Appendix A,
THEN notify SS before loading transport trailer.

4.9.2.13 Load trailer with containers that are evenly spaced at about 6-in. intervals.

4.9.2.14 **WHEN** containers are loaded,
THEN manually advance them to the rear of the trailer.

4.9.2.15 Ensure IMPORT-EXPORT switch is in IMPORT.

4.9.2.16 Place MAN-OFF AUTO switch to AUTO.

4.9.2.17 Close front doors to trailer,
OR replace safety bar.

4.9.2.18 Contact control room with appropriate information on the trailer status.

4.10 Unloading Transport Trailers Docked to WMF-676

NOTE 1: *This section is only used to unload trailers that are semi-permanently docked and will be unloaded using equipment (forklifts, extenda-booms, etc.) through the front of the trailer.*

NOTE 2: *During this section a spotter will be used to help equipment operator unload trailer.*

4.10.1 Open doors on front of trailer, if necessary.

4.10.2 Place MAN-OFF-AUTO switch to MAN.

4.10.3 Place IMPORT-EXPORT switch to EXPORT.

4.10.4 Manually run trailer conveyors to facilitate unloading.

4.10.4.1 **IF** unloading boxes,
THEN use hydraulic lifts to position forks under boxes, as necessary.

4.10.5 Ensure a spotter is present when unloading trailer.

4.10.6 Unload trailer.

4.10.7 Ensure IMPORT-EXPORT switch is in EXPORT.

4.10.8 Place MAN-OFF-AUTO switch to AUTO.

4.11 Loading/Unloading Shredder Boxes

NOTE 1: *Throughout this section, the term forklift refers to the Gehl Model DL12.*

NOTE 2: *Throughout this section, a spotter is present for all box loading, unloading, and movement with the forklift.*

4.11.1 **IF** loading 4 × 4 × 8-ft shredder boxes,
THEN perform the following steps:

4.11.1.1 Ensure personnel are clear of door before opening.

4.11.1.2 Ensure that the AMWTF roll-up door is open.

4.11.1.3 Ensure personnel are clear of lift gate before lowering.

4.11.1.4 Ensure that the lift-gate conveyor is docked on the docking stand.

4.11.1.5 Pick up the shredder box with the forklift, with the box opening away from the mast.

4.11.1.6 Using a spotter, place the shredder box on the conveyor.

4.11.1.7 Back the forklift away to remove the forks from the shredder box pockets.

4.11.2 **IF** unloading 4 × 4 × 8-ft shredder boxes,
THEN perform the following steps:

NOTE: *The Gehl Model DL12 is the only forklift authorized to be used to handle loaded shredder boxes until the box is weighed. Once weighed, a forklift with an appropriate lifting capacity may be used.*

4.11.2.1 Obtain the most conservative gross weight of the shredder box to be unloaded from the Treatment Facility SS.

4.11.2.2 Ensure personnel are clear of door before opening.

4.11.2.3 Ensure that the AMWTF roll-up door is open.

4.11.2.4 Ensure personnel are clear of lift gate before lowering.

4.11.2.5 Ensure that the lift-gate conveyor is docked on the docking stand.

4.11.2.6 Ensure that the shredder box is at the end of the lift-gate conveyor.

4.11.2.7 Position the forklift downstream of the conveyor **AND** slide the tines into the pockets of the shredder box.

4.11.2.8 Using a spotter, lift the shredder box **AND** back away from the conveyor.

NOTE: *The Treatment Facility scale used to weigh loaded shredder boxes may not be the most conservative weight. Weighing of loaded box on a calibrated scale after export is needed to determine downstream equipment handling requirements.*

4.11.2.9 Before moving shredder box(es) to WMF-634 or into storage, weigh the box(es) on a calibrated scale.

4.11.2.9.1 Ensure that the weight has been added to the comment section in WTS, along with the scale number and calibration due date.

4.11.2.9.2 Record the weight on each long side of the box.

NOTE: *Boxes >7,700 lb requiring processing in WMF-634 will be campaigned at a later date coordinated by Production Planning.*

4.11.2.10 **IF** the gross weight of the shredder box exceeds 7,700 lb, **THEN** do **NOT** move the shredder box to WMF-634.

4.11.2.11 Move the shredder box to WMF-634 for assay or to a designated location pending permanent disposal, as required.

4.12 Post Performance Activities

NOTE: *Fire-retardant wood is exempt from the following step.*

4.12.1 Ensure no more than 20 sheets of plywood remain after stacking operations are complete.

(RPT-ESH-01)

4.12.2 **IF** linear beam smoke detectors were taken out of service, **THEN** place linear beam smoke detectors in service **AND** clear the fire impairment.

4.12.3 Ensure that all waste containers in the MWMUs (excluding WMF-618, Pad 1, and Pad R) are on steel pallets, spill control pallets, or are otherwise elevated.

4.12.3.1 Do **NOT** leave containers on the floor in the storage modules unless they are actively managed.

(HWMA/RCRA Permit; HWMA/RCRA TSA IS Document)

4.12.4 Ensure no unused drum spacers or plywood are on or against the waste.

4.12.5 Ensure all spacing requirements are met.

(HWMA/RCRA Permit; HWMA/RCRA TSA IS Document)

4.12.6 **IF** NCR postings have been moved to facilitate waste movement, **THEN** ensure that the NCR postings have been replaced as required by MP-PRPL-22.1.

4.13 Post-Job Review

4.13.1 SS or Designee: Perform a post-job review in accordance with MP-COPS-9.17.

4.14 Abnormal and Infrequent Operations

NOTE*:* *Sections listed in the following table may be performed concurrently.*

4.14.1 **GO TO** the appropriate section from the following table according to the task to be performed**,**
THEN RETURN TO this step, if further activities will be performed:

Task	Section
Using Sandia Lift Fixture to Move Sandia Boxes that have been Wrapped in Plastic	4.14.2
Discovery of Inadequate Container Spacing	4.14.3
Dropped/Mishandled and Breached/Leaking Waste Container	4.14.4
Handling Incompatible Wastes	4.14.5
Handling and Storing Containers in Excess of 380 ^{239}Pu FGE	4.14.6
Inoperable Continuous Air Monitor in a Type II or Type I Module or Pad 2	4.14.7
Damage to Secondary Containment Floor Coating	4.14.8
Unvented Bulging Waste Container	4.14.9
Loading/Unloading Bull Run CO-90 Boxes from 2nd Floor of WMF-676	4.14.10
Free Fossil Fuel Spill	4.14.11
Mismatched AMWTP Barcode Label Identification Numbers on Waste Container or More than One Container with the Same Barcode Label Identification Number	4.14.12
Recreating containers with Reprint Barcode Label NCRs	4.14.13

4.14.2 Using Sandia Lift Fixture to Move Sandia Boxes that have been Wrapped in Plastic

4.14.2.1 **IF** using the Sandia lift fixture to move Sandia boxes that have been wrapped in plastic,
THEN perform the following:

4.14.2.1.1 Notify the radiological controls technician for support.

4.14.2.1.2 Cut plastic from around Sandia lift pockets to allow lift fixture to engage.

4.14.2.1.3 **WHEN** the Sandia box movement has been completed,
THEN ensure that cribbing has been placed under the Sandia box so that the box can be transported using forklift tines.

4.14.2.1.4 Tape over Sandia box lift pockets.

4.14.3 Discovery of Inadequate Container Spacing

NOTE: *All CWR controls from EDF-0034, Criticality Safety Analysis for TRU Waste Storage, are based on 1-sigma FGE values.*

4.14.3.1 **IF** a container violates the CWR storage area requirements,
THEN perform the following:

4.14.3.1.1 Suspend operations involving fissile material in the vicinity of the loss of spacing.

4.14.3.1.2 Notify the SS.

4.14.3.1.3 SS: Notify Criticality Safety within the same shift.

(EDF-0034, CWR 7.3.14)

4.14.3.1.4 SS: Develop a written recovery plan.

4.14.3.1.4.1 Obtain approval for implementation of the recovery plan from Criticality Safety.

(EDF-0034, CWR 7.3.14)

4.14.3.1.5 **IF** data for the container reveals that it contains in excess of 380 ^{239}Pu FGE,
THEN control the container in accordance with Section 4.14.6.

(EDF-0034, CWR 7.3.1 and 7.3.7)

4.14.3.1.6 Move containers until the spacing requirements have been re-established per recovery plan.

(RPT-NFCS-15, CWR 12; EDF-0034, CWR 7.3.14)
(HWMA/RCRA Permit; HWMA/RCRA TSA IS Document)

4.14.3.1.7 Resume normal operations as directed by the SS.

4.14.4 Dropped/Mishandled and Breached/Leaking Waste Container

4.14.4.1 Suspend all waste handling operations in the vicinity of the *dropped* (see def.)/*mishandled* (see def.) and *breached/leaking* (see def.) waste container.

(RPT-NFCS-08, CWR 7.3.2, #3)

NOTE: *Crystals on the side of a waste container, on stacking spacers, plywood, or pallets are considered "waste" for the purposes of Steps 4.14.4.2 and 4.14.4.3.*

4.14.4.2 **IF** the breach is less than 2 in. (approximately the size of a silver dollar)
AND no waste is visible,
THEN leave the affected area
AND maintain at least a 25-ft radius/boundary.

4.14.4.3 **IF** the breach is larger than 2 in.
OR waste is visible,
THEN exit to the next physical barrier.

4.14.4.4 Notify the SS.

4.14.4.5 SS/RCSS/IS/IH: Evaluate conditions
AND respond per MP-RS&C-6.12, Response to Abnormal Radiological Conditions, and INST-OI-88, if necessary.

(RPT-NFCS-08, CWR 7.3.3, #1)

4.14.4.6 **IF** the *spill* (see def.) is from an isolation container,
THEN clean up the spill using the following guidelines:

- All materials recovered from a container spill incident shall be packaged into a spill collection container that is identical to the type of container that spilled its content (e.g., nominal 55-gal drum for a spilled nominal 55-gal drum, nominal 55-gal IC for a spilled nominal 55-gal IC, nominal waste box for a spilled nominal waste box)
- Spill incidents involving more than one container shall employ only nominal 55-gal ICs for the collection of the spilled materials
- For spill incidents involving ICs or resulting in commingled spilled waste, vacuum cleaners with a combined waste hopper/receptacle volume not exceeding 55-gal may be used as part of IC loading operations provided that the vacuum(s) are fitted with a collar or spacing device that provides the equivalent effective isolation as an IC. Alternatively, such vacuums may be treated equivalently as ICs
- When spilled materials are not recovered within the same operations shift, the spilled materials shall be treated equivalently to commingled waste, unless approved otherwise by NCS staff
- Spilled parent containers with residual waste materials may be overpacked. However, if the spilled parent container to be overpacked is an IC, the over-pack shall be designed to provide the same effective neutron isolation as the IC.

(RPT-NFCS-15, CWR 11)

4.14.4.7 **IF** removal of containers is necessary to recover the container or any spillage,
THEN resume waste handling operations in the affected area to support recovery, as directed by the SS.

(RPT-NFCS-08, CWR 7.3.2, #3)

4.14.4.8 **IF** container was dropped or mishandled,
THEN perform an evaluation of the dropped/mishandled container per the following:

- Does the container have significant surface defects, such as extensive corrosion, cracks, or bowing?
- Is there evidence that the container is or has been pressurized, bulged, or concave?
- Are there any split seams, tears, obvious holes, punctures (of any size), creases, broken welds, discoloration, or cracks?
- Is there evidence of loose closure hardware?
- Is the load bearing capacity suspect?

(HWMA/RCRA TSA IS Document; HWMA/RCRA Permit; EDF-0034, CWR 7.3.5)

4.14.4.8.1 SS: **IF** any of the above-conditions are found,
THEN ensure that the container is promptly (within the same shift) overpacked, repaired, processed, or repackaged, as necessary, per INST-OI-84.

4.14.4.8.1.1 **IF** container cannot be overpacked, repaired, processed, or repackaged within the same shift,
THEN contact Criticality Safety.

(EDF-0034, CWR 7.3.5)

4.14.4.8.2 Recover the dropped/mishandled container at the direction of the SS.

4.14.4.9 SS: **IF** the waste container was breached/leaking,
THEN notify the Environmental Compliance manager or the Environmental on-call person of the breach/leaking waste container.

4.14.5 Handling Incompatible Wastes

4.14.5.1 Ensure that true unknown IDCs are stored only with other true unknown IDCs.

NOTE: *Spill pallets are an acceptable means of segregation.*

4.14.5.2 Ensure IW-179 is stored separate from all other IDCs.

4.14.5.3 Ensure RF-998 is stored separate from all other IDCs.

NOTE: *RF-999 and RF-751 may be stored together*.

4.14.5.4 Ensure that RF-999 and RF-751 are stored separate from all other IDCs.

4.14.5.5 Provide *segregation/separation* (see def.) of incompatible IDCs per the following table **OR** per Form-1829.

(HWMA/RCRA TSA IS Document; HWMA/RCRA Permit)

NOTE: *In the following table, "NO" applies to the restricted waste type.*

Waste Type Storage Restrictions	Liquids Identified <5 gal	Liquids Identified ≥5 gal
Acids	NO Halogenated Organics	NO Halogenated Organics NO Caustics
Oxidizers	NO Halogenated Organics	NO Halogenated Organics
Caustics	N/A	NO Acids
Halogenated Organics	NO Acids NO Oxidizers	NO Acids NO Oxidizers

(HWMA/RCRA Permit; HWMA/RCRA TSA IS Document)

4.14.6 Handling and Storing Containers in Excess of 380 ^{239}Pu FGE

NOTE: *All CWR controls from EDF-0034 are based on 1-sigma FGE values.*

4.14.6.1 Ensure the container is labeled as a High FGE container, in accordance with Section 4.3 of this procedure.

(EDF-0034, CWR 7.3.2)

4.14.6.2 Ensure an AMWTP certified fissile material handler provides direct supervision of all container handling, where containers have a value that exceeds 380 ^{239}Pu FGE.

(EDF-0034, CWR 7.3.13)

4.14.6.3 Ensure a minimum 6-ft edge-to-edge separation for drums and boxes is maintained during all container movements to, from, and within the ISA.

(EDF-0034, CWR 7.3.7)

4.14.6.4 **IF** the high FGE container must be moved out of an MWMU,
THEN place the container on an empty transport vehicle.

4.14.6.5 Use an appropriate measuring device (tape measure, pre-measured stick, rod, or pipe, etc.) to verify applicable spacing requirements are compliant for container placement.

4.14.6.6 Ensure the storage area is marked as an ISA, *stacked overmass* (see def.) *box storage area* (SOBSA; see def.), or *planar overmass storage area* (POSA; see def.) before moving any containers into that storage area.

(EDF-0034, CWR 7.3.12)

4.14.6.7 **IF** moving container into an ISA**,**
THEN maintain a minimum 6-ft edge-to-edge separation, as required**.**

4.14.6.7.1 SS: **IF** container **CANNOT** be transferred into the ISA during the current shift,
THEN notify Criticality Safety.

(EDF-0034, CWR 7.3.7)

NOTE: *A minimum 6-ft edge-to-edge separation applies to all >380 ^{239}Pu FGE container movement to and from an ISA.*

(EDF-0034, CWRs 7.3.7 and 7.3.13)

4.14.6.8 SS**: IF** moving container to a POSA or SOBSA, **THEN** request a Criticality Safety review (using Form-1291, Request for Criticality Safety Evaluation, in accordance with MP-NFCS-4.4, Criticality Safety Evaluation) of the assay and RTR information for any container with greater than 380 ^{239}Pu FGE.

(EDF-0034, CWR 7.3.8)

NOTE: *Any container determined to contain less than or equal to 380 FGE may be moved out of an ISA, POSA, or SOBSA into a USA without Criticality Safety review and approval.*

(EDF-0034, CWR 7.3.8)

4.14.6.9 Ensure proper spacing is maintained in the ISA, POSA, or SOBSA when removing a container that has been determined to contain ≤380 ^{239}Pu FGE.

4.14.6.10 SS: Ensure Criticality Safety has approved (using Form-1291) the proposed movement of any container with greater than 380 FGE, from an ISA to a POSA or SOBSA.

(EDF-0034, CWR 7.3.8)

4.14.6.11 **IF** moving a container to a SOBSA or a POSA,
THEN ensure the container does **NOT** exceed the following requirements:

Restricted Storage Requirements/Limits	ISA	SOBSA	POSA
FGE Value Limit	No Limit	≤800 ^{239}Pu FGE	≤1,500 ^{239}Pu FGE
Spacing Requirement	Planar array 6 ft edge-to-edge separation from any waste container Drums and boxes may be intermixed	4 high, 1 wide, and any number long 3 ft minimum separation between arrays Minimum box size is 6 ft × 4 ft × 3 ft No spacing is required between boxes	Planar array minimum 16 in. edge-to-edge separation from any waste containers Drums and boxes may be intermixed

(HWMA/RCRA Permit; EDF-0034, CWR 7.3.7, 7.3.9, 7.3.10)

4.14.7 Inoperable Continuous Air Monitor in a Type II or Type I Module or Pad 2

4.14.7.1 **IF** a continuous air monitor is inoperable,
THEN perform the following:

4.14.7.1.1 Suspend operations.

4.14.7.1.2 Notify SS.

4.14.7.1.3 SS: Notify RCSS to ensure air samples are taken once each shift while operations are occurring,
OR air samples are taken once each 24-hr period if no operations are occurring.

4.14.7.1.4 SS: Notify Environmental and IS/IH.

(HWMA/RCRA Permit; HWMA/RCRA TSA IS Document)

4.14.7.1.5 SS: Resume operations after authorization from RCSS, Environmental, and IS/IH.

4.14.8 Damage to Secondary Containment Floor Coating

4.14.8.1 Notify the SS of the damage.

4.14.8.1.1 SS: Notify the Landlord supervisor via e-mail with a description and location (building, grid number, and other applicable information) of the damage.

4.14.8.1.2 SS: Notify Environmental.

NOTE 1: *Spill blocker is usually found at the west end of each building or in the storage bins located on the west side of the Type II modules.*

NOTE 2: *Personnel should use only spill blocker that is large enough to cover the damaged area and has a sticky side that will adhere to the floor to achieve a seal.*

4.14.8.2 Wipe/clean the floor around the damage to allow the spill blocker to stick before placing it over the damage.

4.14.8.3 Apply spill blocker directly over the damaged area.

NOTE: *The RCRA cone is used to ensure those repairing the floors can find the damaged area and that the damage is not inadvertently covered up.*

4.14.8.4 Place a RCRA cone over or near the damaged area.

4.14.9 Unvented Bulging Waste Container

4.14.9.1 Suspend all waste handling operations within at least 25 ft of the container.

4.14.9.2 Warn others in the area.

4.14.9.3 Place equipment in a safe configuration.

4.14.9.4 Notify SS.

4.14.9.4.1 SS: Notify RCSS and IS/IH.

4.14.9.5 Install lid restraints, per SS direction.

(EDF-0058)

4.14.10 Loading/Unloading Bull Run CO-90 Boxes from 2nd Floor of WMF-676

NOTE 1: *A spotter is present and in visual/radio contact with forklift operator throughout all of Section 4.14.10 for all box loading, unloading, and movement with forklift when using Overhead Door 232.*

NOTE 2: *Barrier side may be opened and closed, as needed, to facilitate the movement of Bull Run CO-90 box, as long as Overhead Door 232 is not open.*

4.14.10.1 Ensure engineered barriers are in place around Overhead Door 232.

4.14.10.2 **IF** removing Bull Run CO-90 box from the AMWTF, **THEN** perform the following steps:

4.14.10.2.1 Move full Bull Run CO-90 box in front of and inside barrier located at Overhead Door 232.

4.14.10.2.2 Ensure all sides of barrier are closed and no personnel are inside the barrier.

4.14.10.2.3 Open Overhead Door 232.

4.14.10.2.4 Using spotter, pick up box with forklift.

4.14.10.2.5 Move forklift away from the building **AND** place box on the ground or transport vehicle.

4.14.10.2.6 Close Overhead Door 232.

4.14.10.3 **IF** placing Bull Run CO-90 box into the AMWTF,
THEN perform the following steps:

WARNING

Introducing fissile material to the AMWTF through Overhead Door 232 can increase the probability of accidental criticality.

4.14.10.3.1 Verify that the box has been labeled as EMPTY.

4.14.10.3.2 Ensure all sides of barrier are closed and no personnel are inside of barrier.

4.14.10.3.3 Open Overhead Door 232.

4.14.10.3.4 Using spotter, lift box and place on floor inside of Overhead Door 232.

4.14.10.3.5 Move forklift away from the building.

4.14.10.3.6 Close Overhead Door 232.

4.14.10.3.7 Move boxes away from door.

4.14.11 Free Fossil Fuel Spill

4.14.11.1 **IF** a spill of free fossil fuel is found to be present in the TSA-RE Type I or Type II modules,
THEN respond per INST-OI-88.

4.14.12 Mismatched AMWTP Barcode Label Identification Numbers on Waste Container or More than One Container with the Same Barcode Label Identification Number

4.14.12.1 SS or Designee: Immediately generate an NCR against all affected barcode numbers per MP-Q&SI-5.4 and attach an NCR tag to the container.

(RPT-TSR-03, LCO 3.6)

NOTE: *Items being included in the NCR disposition are not to be performed by the SS or designee at this time.*

4.14.12.1.1 **WHEN** writing the NCR,
THEN include the following in the "Disposition Description or CAP" block of the NCR:

- Use available information (move sheets, historical information, etc.) to determine barcode number of the container.
- Record any historical information available on the WTS container screen.
- Historical ID number from container will be removed by the SS, AK personnel, or via SDCR prior to inactivating the container/barcode numbers in WTS.
- Recreate the container in WTS in accordance with INST-OI-11 with a new barcode number using the historical information noted above
- Inactivate the original container/barcode numbers in WTS with an SDCR.
- Disposition WILL NOT be implemented until QA concurrence is received.

4.14.13 Recreating Containers with Reprint Barcode Label NCRs

4.14.13.1 Ensure the disposition for NCR for the container to be recreated has been approved and the NCR is at "A Waiting Results" in TrackWise.

4.14.13.2 Record any historical information available on the WTS container screen and from the container for the container to be recreated.

NOTE: *Historical ID number from container will be removed by the SS or AK personnel or via SDCR prior to inactivating the container/barcode numbers in WTS.*

4.14.13.3 **IF** SS will be removing Historical ID from the container, **THEN** perform the following:

4.14.13.3.1 SS: Log into WTS under Supervisor.

4.14.13.3.2 Click on Data Review drop down and select "Supervisory Override."

4.14.13.3.3 Enter the barcode number that you want to remove "hist ID" from and press F8.

4.14.13.3.4 Click "OK" on both of the pop-ups.

4.14.13.3.5 Highlight the "hist ID" and press "Delete."

4.14.13.3.6 Press "Tab."

4.14.13.3.7 E-sign and save the record.

4.14.13.4 Verify "'hist ID" has been successfully removed from the barcode number.

4.14.13.4.1 **GO TO** "General, container screens, historical query."

4.14.13.4.2 Enter the "hist ID" of the container.

4.14.13.4.3 Verify there is **NOT** an AMWTP barcode number associated with the "hist ID."

4.14.13.5 Submit an SDCR to inactivate the old AMWTP barcode number in WTS.

4.14.13.6 Send and receive the container to a virtual location in WTS.

NOTE: *If the container has a Toaster Cover a large tape patch on the outside of the Toaster Cover over the area where the barcode labels are under the Toaster Coverage would be sufficient to meet the intent of Step 4.14.13.7.*

4.14.13.7 Deface or remove "ALL" old barcode labels from the container.

4.14.13.7.1 SS: Verify the old barcode labels on the container are unreadable.

4.14.13.8 Ensure the following information is annotated in the AMWTP Container comments block for the OLD AMWTP barcode number:

- "Hist ID" has been removed from this container ID in WTS
- NCR number that the action is being performed for
- Verification that 'ALL' old barcode labels have been made unreadable
- SDCR number submitted to inactivate the old barcode number in WTS
- New barcode number of the container.

4.14.13.9 **GO TO** Step 4.3.1 to apply new barcode numbers to the container,
THEN RETURN TO Step 4.14.13.10.

4.14.13.10 Recreate the container in WTS using the historical information noted above as follows.

4.14.13.10.1 **IF NOT** already performed,
THEN log in to WTS as the Inspection Station Operator.

4.14.13.10.2 Confirm the correct AMWTP barcode number for the target container to be created.

NOTE: *The preferred method for entering barcode numbers is the barcode scanner.*

4.14.13.10.3 Select the "AMWTP Container ID" field and enter the confirmed AMWTP barcode container ID.

4.14.13.10.4 Select the "Container Type" field and enter the appropriate container type.

4.14.13.10.5 Select the "Waste Type" field and enter the waste type of the container.

4.14.13.10.6 **IF** necessary,
THEN select "Location" field and enter container creation area.

NOTE: *"Container Markings" tab needs to be completed for all data of containers retrieved or repackaged. This can be completed while assigning historical IDCs or after, if there is a matching historical ID.*

4.14.13.10.7 Enter the available data in the "Historical ID" field **AND** press F9.

4.14.13.10.7.1 **IF** there is matching data in WTS that has **NOT** been assigned to another AMWTP container,
THEN ensure information retrieved from the container in Step 4.14.13.2 matches the information entered into WTS, and is consistent with the WTS response.

4.14.13.10.7.2 **IF** entering partial historical information,
THEN perform the following:

4.14.13.10.7.2.1 Enter the % sign before and after the partial historical information entry.

4.14.13.10.7.2.2 Press F9 to display all of the potentially matching numbers.

4.14.13.10.7.2.3 **IF** any of the following situations occur:

- No historical information populates
- The message “Container not found” is displayed
- The container information is incomplete
- The container information is unreadable
- The container is **NOT** labeled,

THEN enter all of the available information into the “Container Markings” tab.

4.14.13.10.8 **IF** no Historical ID populates,
THEN enter all historical markings into the “Container Markings” tab.

4.14.13.10.9 Ensure “Container Type” field matches the container being created.

4.14.13.10.10 **IF** container should **NOT** be vertically unpacked,
THEN check the “No Vertical Unpack” box.

4.14.13.10.11 **IF** container is a repackaged or direct-loaded container and should **NOT** be vertically unpacked,
THEN check the “No Vertical Unpack” box.

4.14.13.10.12 Select the “Retrieval Area” field and enter the retrieval area and cell from historical data.

4.14.13.10.13 Select “Container Weight” field and enter the weight.

4.14.13.10.13.1 **IF** weight is **NOT** available,
THEN enter default weight of 1 lb.

4.14.13.10.14 **IF** container is a box,
THEN select the “Box Dimensions” field
AND enter box dimensions.

4.14.13.10.15 **IF** container is a bulged drum,
THEN select "Yes" in the "Bulged/venting Required" drop-down pick list.

4.14.13.10.16 **IF** container is **NOT** a bulged drum,
THEN select "No" in the "Bulged/venting Required" drop-down pick list.

4.14.13.10.17 Enter the dose rates in the appropriate fields.

4.14.13.10.17.1 **IF** dose rates are **NOT** available,
THEN use the populated default values.

4.14.13.10.18 Locate the "Pu^{239} FGE" field in the "Historical ID" tab, if available,
AND ensure that the value is ≤200 FGE for drums
OR ≤325 FGE for boxes.

4.14.13.10.18.1 **IF** the historical FGE value is >200 FGE but ≤380 FGE for drums
OR >325 FGE but <380 FGE for boxes,
THEN affix "FGE>WAC" label to container(s).

(EDF-0034, CWR 7.3.2)

4.14.13.10.18.2 **IF** container is >380 FGE,
THEN perform the following:

4.14.13.10.18.2.1 Suspend operations.

4.14.13.10.18.2.2 Notify the SS.

4.14.13.10.18.2.3 SS: Notify PSM.

(EDF-0831, CWR 24)

4.14.13.10.19 Select the "Visual Classification" tab
THEN enter the visual class of the container.

4.14.13.10.19.1 Ensure each field is filled out with the applicable information.

4.14.13.10.19.1.1 **IF** necessary,
THEN use the "Container Markings" tab and associated fields to record information about the container (e.g., if the container is overpacked, note the overpack barcode number).

4.14.13.10.20 **IF** container is commingled,
THEN ensure isolation ring and anti-stacking cone are placed on the container.

(EDF-0831, CWR 18, 20)

4.14.13.10.20.1 Update Container markings comment section with commingled data.

4.14.13.10.21 E-Sign the container record.

4.14.13.10.22 **IF** the container has a filter installed,
THEN select the "filter screen" tab
AND perform the following:

4.14.13.10.22.1 Click on the appropriate filter button
OR select from the "Other Filters" pull-down menu.

4.14.13.10.22.2 Select the "Insertion Event" from the drop-down menu.

4.14.13.10.22.2.1 Select "Insertion Box"
AND enter the date.

4.14.13.10.22.2.2 Press the E-SIGN & SAVE button.

4.14.13.10.22.2.3 **IF** a pop-up message appears (e.g., the date does not synchronize with the event, accept the date?),
THEN select the appropriate response.

4.14.13.10.22.2.4 E-Sign and Save.

4.14.13.10.23 **IF** any container data is entered incorrectly, **THEN** perform the following:

4.14.13.10.23.1 Contact the SS for correction assistance.

4.14.13.10.23.2 SS: **IF** the error CANNOT be corrected, **THEN** enter an NCR per MP-Q&SI 5.4.

4.14.13.10.24 SS: Verify that all barcode labels on the container have the same AMWTP barcode identification number.

4.14.13.11 Ensure the following information is annotated in the AMWTP Container comments block for the NEW AMWTP barcode number:

- "Hist ID" has been removed from old container ID "xxxxxxxx" in WTS and used to create this container.
- NCR number that the action is being performed for,
- All old barcode labels have been made unreadable,
- SDCR number submitted to inactivate the old barcode number in WTS,
- Verification that "ALL" barcode labels on the container have the same AMWTP barcode identification number.

5.0 DEFINITIONS

^{239}Pu fissile gram equivalent. An isotopic mass of radionuclide normalized to ^{239}Pu.

Actively managed. A container is actively managed when someone stays within the vicinity of the container(s) at all times (except for upset conditions, or in areas where secondary containment is provided, lunches, breaks, and in process moves).

Breached. Any physical degradation in the structural soundness of a container that could potentially lead to a *release* (see def.) of contamination. A breach is a hole in the container that can lead to leaks, spills, or releases.

Container. A drum, box, or a bag or plastic wrapping material that is secure and leak tight. Bags/plastic wrapping materials may be used as a container to store rigid waste (e.g., plywood, pallet) or non-rigid waste (e.g., PPE, radiological swipes).

Criticality working requirement. Term used to designate requirements of the AMWTP Criticality Safety Evaluation.

Do Not Stack label. For boxes, it means do not stack anything on top of the container. For drums, it means leave in planar array.

Dropped container. Any waste container bumped, knocked, or unintentionally released from handling fixtures where the container falls more than 1 ft from the lowest edge of the container.

Fissile material handler. A person certified by contractor facility management to manipulate or handle significant quantities of fissionable materials, (e.g., uranium-233, uranium-235, plutonium-238, plutonium-239, plutonium-241, neptunium-237, americium-241, and curium-244), or manipulate the controls of equipment used to produce, process, transfer, store, or package significant quantities (i.e., greater than 380 FGE) of such materials.

Four legs. This means that there are four points where the load is secured to the transport.

Free fossil fuel. Diesel fuel or gasoline in portable storage or fuel transport containers (e.g., gas cans, drums, vessels) or spilled diesel fuel or gasoline from portable storage or fuel transport containers. Fossil fuel in vehicle or equipment fuel tanks or in the Retrieval Contamination Enclosure diesel fueling system is not free fossil fuel.

INL-generated waste. Waste generated by activities performed inside the boundary of the Idaho National Laboratory.

Isolation container. A 55-gal or larger drum with a criticality collar attached and an anti-stacking cone when lidded.

Isolation storage area. A storage area that is used to promptly place containers when they are identified as greater than 380 ^{239}Pu FGE.

Item description code. A three-digit numeral identifying the waste matrix group within a container, or group of containers (e.g., IDCs RF-001 and RF-002 are Rocky Flats 1st and 2nd stage sludges).

Leaking. Waste that is discharging, escaping, leaching, etc., out of its container and remains on the container. For example, material from inside the container that has not left the container surface to contaminate any other surface.

Mishandled container. Any waste container bumped, knocked, or unintentionally released from handling fixtures where the container falls less than 1 ft from the lowest edge of the container.

Mixed waste management unit. A building that is used to manage (e.g., store, stage, or characterize) mixed waste at the AMWTP.

Offsite waste. Waste generated by activities performed at facilities outside the boundary of the Idaho National Laboratory

Overmass. As used in this document it means greater than 380 ^{239}Pu FGE.

Planar overmass storage area. A planar (i.e., no stacking) storage area that is used for compact storage of containers that are identified as greater than 380 ^{239}Pu FGE, but not more than 1,500 ^{239}Pu FGE.

Pyrophoric. A substance that will ignite spontaneously in air. Pyrophoric waste is identified with an IDC of RF-751, RF-950, and/or RF-999.

Pyrophoric material. Waste identified with an IDC RF-751 and/or RF-950 and RF-999.

Release. Any identifiable waste that has spilled, leaked, poured, emitted, emptied, discharged, injected, pumped, escaped, leached, dumped, or disposed of into environment media and is not contained by permitted secondary containment, or other permitted engineering controls; (for e.g., air borne radiological contamination inside of a Type II module, or waste spilled onto the road between buildings).

Segregation/Separation. Maintained by a 3-ft distance or by means of a physical dike, berm, wall spill pallet, or other device designed to contain liquids.

Semi-permanent. A transport trailer that is docked to the AMWTF the majority of the time, but can still be undocked, if necessary.

Spill. Waste including packaged waste (e.g., polybags or bottles) that has discharged, escaped, emptied, leached, etc. out of its container and has contacted other surfaces, for example, material from inside the primary container that has left its container surface and has contacted any other surface. In addition, a spill is any radiological contamination found outside a posted contamination area, high contamination area, or airborne radioactivity area, or radiological contamination found in a posted area that exceeds suspension limits of the work control document.

Stacked overmass box storage area. A storage area that is used for compact storage of boxes that are identified as greater than 380 ^{239}Pu FGE but not more than 800 ^{239}Pu FGE.

True unknown wastes. Wastes with unknown IDCs/waste groups and/or Environmental Protection Agency hazardous waste numbers following real-time radiography, or waste with known IDCs/waste groups but unknown Environmental Protection Agency hazardous waste numbers.

Unrestricted storage area. A general storage area for containers that are identified as containing no more than 380 ^{239}Pu FGE.

6.0 REFERENCES

(1) 1291-2013-044, Criticality Safety Evaluation for New Style M3 Overpack

(2) 10 CFR 835.405, Receipt of Packages Containing Radioactive Material

(3) 29 CFR 1910.1200, Hazard Communication

(4) 40 CFR 761, Polychlorinated Biphenyls (PCBs) Manufacturing, Processing, distribution in Commerce, and Use Prohibitions

(5) 40 CFR 761.65, Storage for Disposal

(6) AMWTP HWMA/RCRA Permit

(7) AMWTP HWMA/RCRA TSA Interim Status Document

(8) DOE M 435.1-1, Radioactive Waste Management Manual

(9) EDF-0041, Stacking Stability Assessment for 83-gallon Overpack Drums with "Nesting" Bottoms

(10) EDF-0034, Criticality Safety Analysis for TRU Waste Storage

(11) EDF-0058, EET Corp. Drum Web Lid Restraints

(12) EDF-0066, The Stacking of FRP Boxes

(13) EDF-0075, Handling of Deformed Drums During Retrieval

(14) EDF-0195, Sandia Boxes Stacking Analysis

(15) EDF-0266, Stacking Stability for 100-gallon Puck Drums Two to Five High

(16) EDF-0273, Stacking Stability for 85-gallon Overpack Drums Two to Five High

(17) EDF-0338, Evaluation of the Asphalt Structural Stability to Support Dense Pack Loading

(18) EDF-0364, Lifting of Waste Boxes with Plywood Sheathing

(19) EDF-0453, Stacking Stability for 110-gallon Salvage Drums Two to Five High

(20) EDF-0737, Onsite Transportation Load Securement

(21) EDF-0831, Criticality Safety Evaluation Involving TSA-RE Retrieval Operations

(22) Form-1291, Request for Criticality Safety Evaluation

(23) Form-1829, Production Planning Non-Facility Move Sheet

(24) Form-1830, Production Planning Checks for Boxes to WMF-676

(25) Form-2017, Production Planning Checks for Direct Feed Drums to WMF-676

(26) INST-FOI-15, Waste Box Shredding and Exporting Operations

(27) INST-OI-62, Mixed/Radioactive Waste Receipt and Transfer

(28) INST-OI-84, Waste Container Repair and Overpack

(29) INST-OI-88, Spill/Leak Response and Cleanup

(30) INST-OI-107, Refueling Equipment in the Retrieval Contamination Enclosure

(31) LST-ISIH-03, Beryllium Contaminated Waste List

(32) MP-CMNT-10.8, Hoisting and Rigging

(33) MP-CMNT-10.9, Electrical Safety Program

(34) MP-COPS-9.17, Performing Pre-Job Briefings and Post-Job Reviews

(35) MP-DOCS-18.2, Records Management

(36) MP-NFCS-4.4, Criticality Safety Evaluation

(37) MP-PRPL-22.1, Production Planning

(38) MP-Q&SI-5.4, Identification of Nonconforming Conditions

(39) MP-RS&C-6.12, Response to Abnormal Radiological Conditions

(40) RPT-DSA-02, Documented Safety Analysis

(41) RPT-ESH-01, Non-Facility Operations Fire Hazards Analysis and Fire Safety Assessment

(42) RPT-ESH-049, Hydrogen Deflagration Mitigation Process

(43) RPT-NFCS-07, Criticality Safety Evaluation for the AMWTF

(44) RPT-NFCS-08, Criticality Safety Evaluation for AMWTP Retrieval Operations

(45) RPT-NFCS-11, Criticality Safety Evaluation for Container Conveyors within AMWTF

(46) RPT-NFCS-15, Criticality Safety Evaluation for TSA-RE Retrieval Operations

(47) RPT-TSR-03, Technical Safety Requirements

7.0 RECORDS

Records generated by this procedure are classified in accordance with the table below and dispositioned per MP-DOCS-18.2, Records Management.

Record Description	Classification
INST-OI-11, Case File	Both FOR/NP WIPP/ENV2-a-1-a/Destroy 5 years after Life of Facility
Form-1089, Waste Tracking Information for Movement of Waste	Record information is retained in WTS. Once WTS entries are made, this form can be discarded
Form-2165, Verification of Barcode Labels	Facility Operating Record/ENV2-a-1-a/ Destroy 5 years after Life of Facility

8.0 EXHIBITS

Exhibit 1 – WMF-636 Preferred Stacking Stability for Steel Drums

Exhibit 2 – WMF-636 Alternate Stacking Stability for Steel Drums

Exhibit 3 – Stacking Stability for 110-Gal Salvage Drums Two to Five High – 3 Drums Wide per EDF-0453

Exhibit 4 – Stacking Stability for 110-Gal Salvage Drums Two to Five High – 2 Drums Wide per EDF-0453

Exhibit 5 – Load Reference Chart

9.0 APPENDIXES

Appendix A – Box Sizes and Configurations

Appendix B – Revision Log

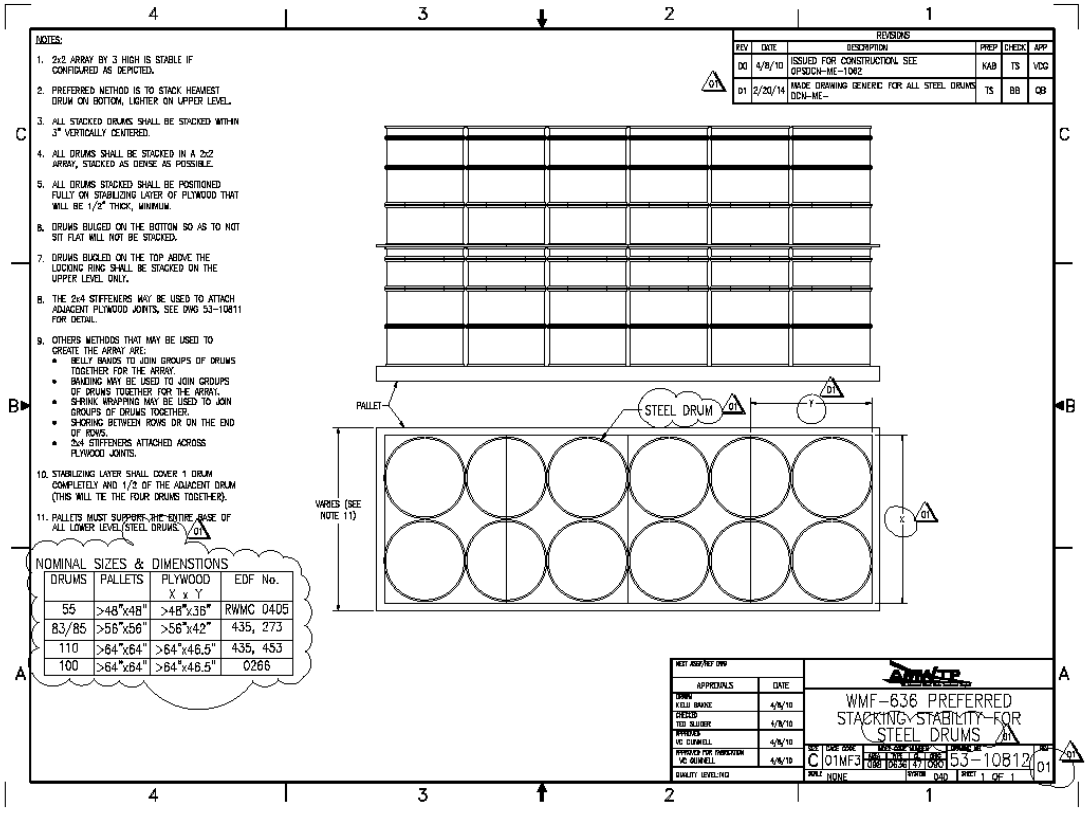

Exhibit 1. WMF-636 Preferred Stacking Stability for Steel Drums.

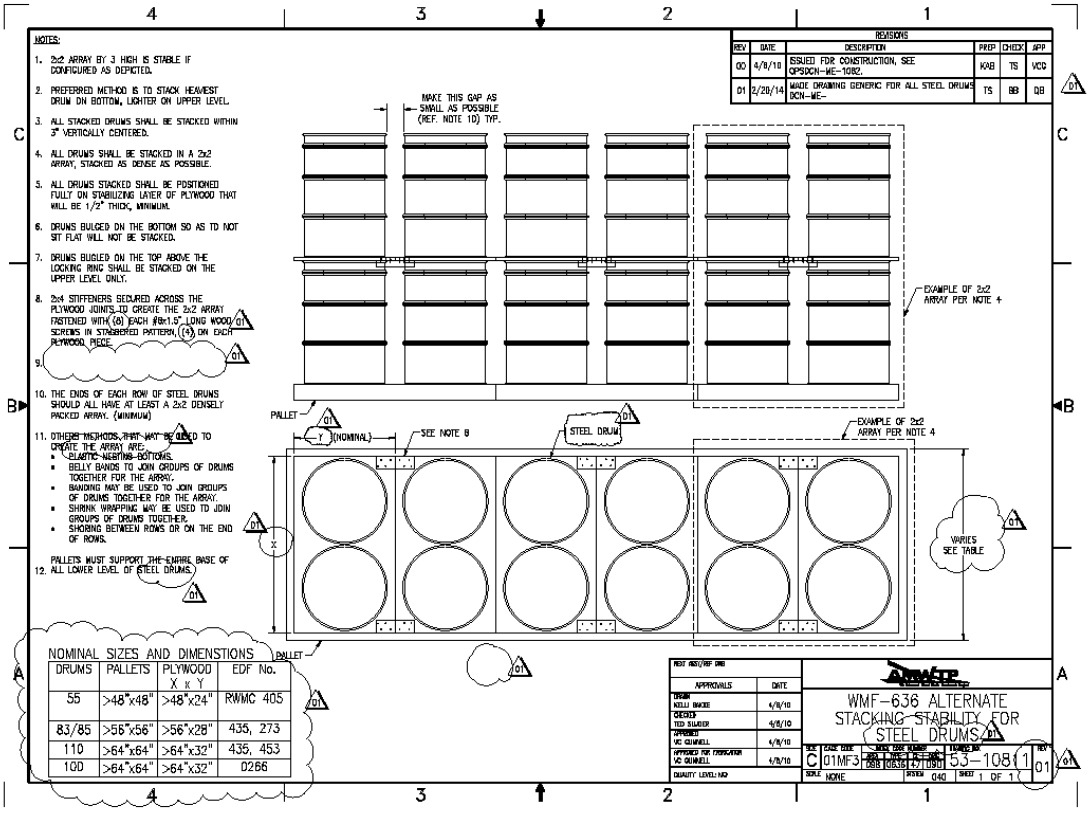

Exhibit 2. WMF-636 Alternate Stacking Stability for Steel Drums.

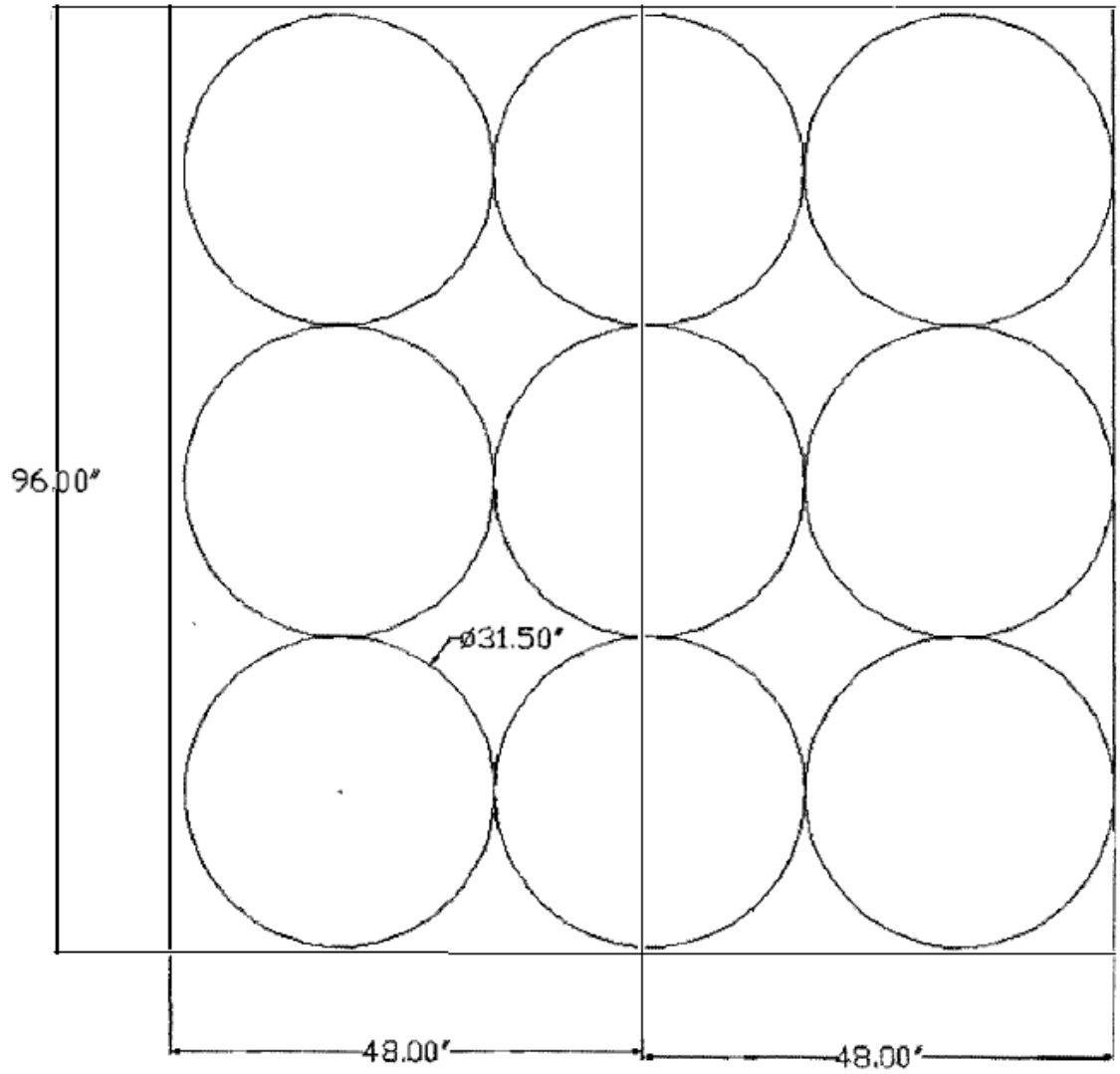

Exhibit 3. Stacking Stability for 110-Gal Salvage Drums Two to Five High – 3 Drums Wide per EDF-0453.

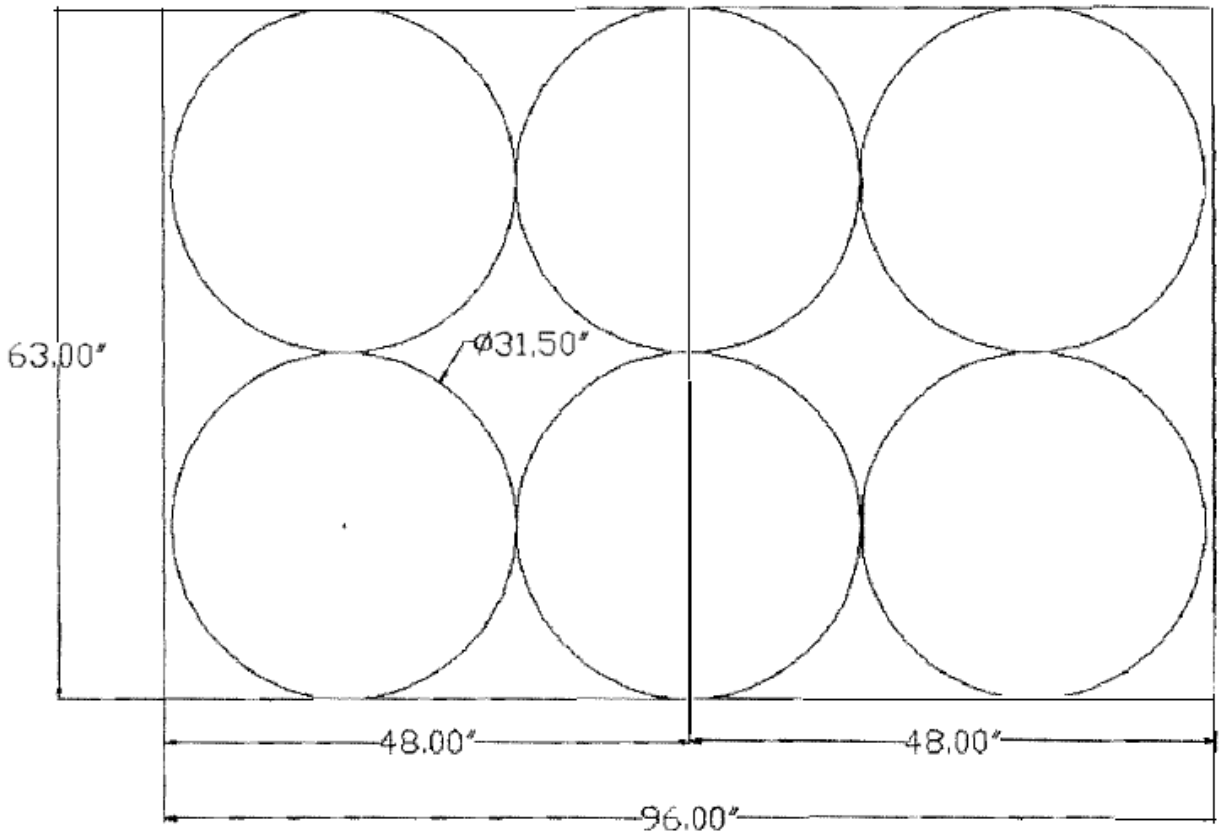

Exhibit 4. Stacking Stability for 110-Gal Salvage Drums Two to Five High – 2 Drums Wide per EDF-0453.

Pallet Type	Pallet Runner Length	Pallet Base Description[a,b]	Pallet Load Capacity (lb)
4 bar metal pallet	96 inches	4 each, 4 inch wide runners	8,213
		4 each, 8 inch wide runners	32,870
		4 each, 4 inch wide runners with plywood base	22,815
		4 each, 8 inch wide runners with plywood base	47,652
6 bar wood pallet	48 inches	6 each, 4 inch wide runners with plywood top and base	10,440
		6 each, 8 inch wide runners with plywood top and base	29,104
11 bar wood pallet	48 inches	11 each, 4 inch wide runners with plywood top and base	28,547
64 inch by 64 inch wood pallet	64 inches	5 each, 4 inch wide runner with plywood top and base	12,575
		9 each, 4 inch wide runners (split spacing)[c] with plywood top and base	35,242
		5 each, 8 inch wide runners with plywood top and base	32,093
5 runner box[d]	48 inches	5 each, 4 inch wide runners	5,136
		5 each, 8 inch wide runners	20,482
		5 each, 4 inch runners with plywood base	7,884
		5 each, 8 inch runners with plywood base	23,627

Notes:

a. Plywood is a minimum of 3/4-inch thick when used as a base (surface in contact with floor). Plywood is a minimum 1/2-inch thick when used as a top (surface in contact with containers).
b. Pallet runners may be metal, wood, or other structural support of the width and length indicated.
c. Split spacing means an additional runner is added half way between each of the five existing runners, for a total of nine runners.
d. Boxes originally equipped with less than five runners will have additional runners of the appropriate width added to reach the nominal five runner case.

Exhibit 5. Load Reference Chart.

(HWMA/RCRA Permit)

Appendix A – Box Sizes and Configurations

Generic Codes	TWBD Code	Type of Box	Box Dimensions (L × W × H) in.	Comments
WOOD BOXES				
BXW	NSO	FRP (MRC)	24 × 24 × 18	See NOTE 4
BXW	NSP	FRP (MRC)	36 × 24 × 24	See NOTE 4
BXW	NSQ	FRP (MRC)	NA	See NOTE 4
BXW	NSN	FRP (MRC)	NA	See NOTE 4
BXW	NSF	Plywood (FRP)	NA	See NOTE 4
BXW	NSC	Plywood (FRP)	NA	See NOTE 4
BXW	E	FRP	84 × 48 × 48	See NOTES 1 and 2
BXW	NSE	Plywood (FRP)	84 × 52 × 48	
BXW	NSA	FRP (MRC, RFP)	84 × 48 × 52	
BXW	NSH	FRP (ICPP)	96 × 48 × 48	
BXW	NSJ	Plywood (FRP)	112 × 62 × 35	See NOTE 3
BXW	NSH	FRP (ICPP)	96 × 48 × 66	
BXW	NSB	FRP (MRC)	103.5 × 60.5 × 62.5	See NOTE 3
BXW	NSM	FRP (MRC)	NA	See NOTE 4
BXW	NSL	FRP (MRC)	108.5 × 60.5 × 104.5	See NOTE 3
BXW	NSK	FRP (MRC)	136.5 × 71.5 × 108	See NOTE 3
BXW	NSD	FRP (MRC)	137 × 108 × 72	See NOTE 3
BXW	SDOP	SDOP (Six Drum Overpack Box)	93.5 × 55 × 46.875	
METAL BOXES				
BXM	D	56 ft^3 box	84 × 48 × 24	
BXM	3	Rectangular	68 × 54 × 38.5	See NOTE 4
BXM	2	6 drum overpack	74.375 × 50.5 × 38.5	Drum overpack
BXM	SWB	Standard waste box	71 × 54.5 × 31.1875	See NOTE 3
BXM	NS4	Mexican AM	72 × 48 × 48	
BXM	TX4	Tx-4 steel Type 1	78.5 × 54.5 × 41.25	Drum overpack
BXM	9	SAND Type 1	88 × 54 × 54	
BXM	4	FRP overpack	88 × 54 × 54	Box overpack
BXM	8	SAND Type 2 (MRC)	84 × 48 × 48	
BXM	TX4	Tx-4 steel Type 2	78.5 × 54.5 × 39.4375	Box overpack
BXM	TX4	Tx-4 steel Type 3	92 × 56 × 56.75	Box overpack
BXM	TX4	Tx-4 steel Type 4	92 × 58.25 × 59	Box overpack
BXM	5	Rectangular	112 × 68 × 77	See NOTE 3
BXM	NSG	Mount box	108 × 104 × 60	See NOTE 3
BXM	CMB	Corrugated metal box / SAND Type 4	68 × 54 × 38.5	See NOTE 4

AMWTP INSTRUCTION		
INST-OI-11, Rev. 57	Issued: 08/01/14	Effective: 08/02/14

Waste Container Handling

Generic Codes	TWBD Code	Type of Box	Box Dimensions (L × W × H) in.	Comments
CBX		Cake overpack box	92 × 56 × 55.07	See NOTE 1 (box overpack)
		Cake overpack box	92 × 56 × 55.07	See NOTE 2 (box overpack)
BINS				
BIN	NSI	Retrieval (Radioactive Waste Management Complex [RWMC])	NA	See NOTE 4
BIN	NSZ	Retrieval (RMWC)	NA	See NOTE 4
BIN	NSX	Retrieval (RMWC)	NA	See NOTE 4
BIN	NSW	Retrieval (RMWC)	NA	See NOTE 4
BIN	NSY	Retrieval (RMWC)	81.625 × 57.625 × 43.188	
BIN	7	M-III, M-IV	50.375 × 58.374 × 72.375	8-drums overpack
BIN	F	M-III, M-IV	50.375 × 58.374 × 72.375	8-drums overpack
Other				
MOP	SMOP	SMOP (Six drum metal overpack pallet)	83 × 55.25 × 44.56	SMOP, 6 Drum (83-/85-gal) Metal Overpack Pallet (DWG BM-1443)
SOP	BRSOP	Soft overpack	94 × 58 × 55	
SOP	M3SOP	Soft overpack	63 × 56 × 78	

NOTE 1: *There are 245 existing "cake" boxes in Type II. It is assumed retrieval will be able to unpack all these overpacks and deliver only plywood or FRP boxes to treatment. This will not change "E" FRP box count because the database search did not include these cake boxes.*

NOTE 2: *Retrieval is assuming 810 plywood or FRP boxes will need to be overpacked during AMWTP retrieval. Of those, it is assumed that 648 will be unpacked and delivered (plywood or FRP boxes) to the AMWTF. The 162 cake boxes are subtracted from "E" FRP box count.*

NOTE 3: *Retrieval will size-reduce and repack these boxes to the treatment box line size requirements.*

NOTE 4: *If a box does not meet the following minimum dimensions – 180 cm × 114 cm × 60 cm (70.9 in. × 45 in. × 24 in.) – it must be overpacked or have items attached (2 × 4, 4 × 4, etc.) to meet the minimum dimensions.*

(1291-2013-044)

Appendix B – Revision Log

Revision Number	Date Approved	Pages Affected	Description of Revision
0	08/06/02	All	Initial issue. DCR-1291 – Issued for formal validation during commissioning activities.
1	10/18/02		Rev 1. DCR-1479 -Editorial changes throughout document, New steps 4.9.3.1.2.4 and 4.9.3.1.2.5, Changed CSA to CWR, Corrected Title in header.
2	12/30/02	All	DCR-1813, Incorporated changes in accordance with additional validations and implementation matrices.
3	01/14/03	Various	DCR-1895, Incorporated changes to reflect additional validating
4	01/31/03	Various	DCR-1974, Incorporated changes identified from the CORR.
5	03/06/03	Various	DCR-2075, Incorporated changes from the WIPP review and DOE surveillance with regard to Bulging Waste Container. Incorporated changes from the RCRA Implementation Matrix
6	03/27/03	All	DCR-2126, Minor change to amend date from DOE Approves Retrieval Operations Start-up to 03/28/03 and Editorial update to Records Section.
7	03/28/03	Various	DCR-2168, Clarify HWMA/RCRA Permit requirements, Correct 700 lb drum stacking precautions, Add manual tracking provisions for retrieval from Type II Modules.
8	04/03/03	Pgs 3, 32, 35, 37, & 38	DCR-2175, Incorporate field change, update Errors to Section 4.7, & remove steps that occur automatically when barcode is scanned, add if applicable to step 4.6.13.
9	4/14/03	Pg 37	DCR-2203, Minor Change. Changed 4.6.8 & added 4.6.9 to allow for manually entering data into WTS.
10	04/21/03	Pg 30 & 31	DCR-2211, Section 4.3.64 changed wording to verbatim from permit, Section 4.4.2 removed driver.
11	06/18/03	Sec 3.0, 4.5, 4.6, & 4.9	DCR-2294, Definition clarifying a dropped waste container. Adding steps to review historical FGE data. Clarify actions for incompatible IDCs.

Revision Number	Date Approved	Pages Affected	Description of Revision
12	7/17/03	Various	DCR 2365, Added steps for the operation of the remote drum punch.
13	11/11/03	Various	DCR 2422, Remove steps for bulging drum, steps will be performed with INST-OI-09. Remove Rev 12, FC-1 and add Precaution for maximum trailer loading.
14	01/21/04	Various	DCR-2620. Added reference and revised information to implement the Transport Vehicle Crash Addendum (BNFL-5232-RPT-016). Section revised to meet action item identified in ORPS: 2003-0008, "Waste Drum Fire," C/A #4.
15	03/11/04	Page 54	DCR-2798. Added new Substep 4.9.5.2.1 to provide additional guidance on high FGE box placement.
16	03/23/04	Various	DCR-2678. Container IDCs and related notes and steps were revised.
17	06/03/04	Various	DCR-2951. Changes made to implement TrackWise Action Items 3899, 3900, and 3901. Additional steps revised to clarify, which assay implements > WAC requirements. Section 4.17 was revised because only swivel eyebolts will be used.
18	07/13/04	Section 4.9.4	DCR-3179. Change note in Section 4.9.4 to read: "Separation or physical segregation requirements consist of the following:" Added 5 bullets under Note 1 and moved the 4 current bullets under a new classifier.
19	08/17/04	Rev Log Section 4.3.7.23	DCR-3215. Update revision log to include Revision 18 information. Change precaution in Section 4.3.7.23 to read: "…Within WMF-635 must be stored on pallets (conventional or spill) *or risers*, which are arranged in rows…" Incorporate WIPP comments

Revision Number	Date Approved	Pages Affected	Description of Revision
19 FC-1	12/03/04	4.6.8 and 4.7.9	DCR-4045. Changed labeling information.
19 FC-2	12/11/04	4.6.8 and 4.7.9	DCR-4060. Revised steps to conform with labeling information in INST-FOI-26.
19 FC-3	03/23/05	Pg 16-17, App A	DCR-4218. Changes to steps and Appendix A to reflect new NE-007 CWRs.
19 FC-4	03/24/05	Pg 22, App A	DCR-4221. Changes to steps and Appendix A to reflect new NE-007 CWRs.
19 FC-5	04/05/05	Pg 28 and 31	DCR-4254. Steps to clarify container markings and when a planar array is used.
19 FC-6	04/07/05	4.3.3	DCR-4262. Remove step superceded by newest rev to CSA.
20	04/13/05	All	DCR-3265. Complete re-write to incorporate FC-1 and 2, NE-007 rev 3 with clarification of ES&H, Crit, and DSA requirements, Operator validations, SME review, Editorial to reflect requirements of MP-DOCS-18.1 and remove SWEPP references. Include updated DSA and TSR requirements, CBFO comment resolution; incorporate FC-5 and FC-6; FC-3 and FC-4 are already incorporated with rev 20A.
20 FC-1	04/19/05	Pg 9	DCR-4273. Update definition for a Type V container
20 FC-2	05/11/05	Pg 36, 39, & 42	DCR-4305. Clarify placing labels below the second chime
21	06/30/05	All	DCR-4386. Incorporate Field changes 1 and 2, Incorporate CWR and RCRA changes into Appendix A, Update to new AMWTP, INL format, and Minor editorial.

Revision Number	Date Approved	Pages Affected	Description of Revision
22	11/01/05	Various	DCR-4413. Added Move sheet section 4.12, Add verbiage to use pallets and spacers when stacking drums three high in the TSA-RE, Combined labeling, IDC, and WTS data steps into new sections 4.9, 4.10, and 4.11. Added PCB and Beryllium labeling information.
23	02/07/06	All	DCR-4685. Apply new template, Incorporate Blue Sheet changes, Incorporate 18.1 format changes (i.e., removes system description etc.), Incorporate CSE changes.
24	4/12/06	Various	DCR-4878. Corrected building number from Building 626 to Building 628. Add new P&Ls, for backing of waste handling trucks and/or trailers and to implement on a permanent basis the instruction in STI on Enhanced Safe Drum Handling Work Practices.
25	05/18/06	Various	DCR-4982. Added information to add the ability to stack 83-gallon drums with nesting bottoms per EDF-0041 and the ability to add 100-gallon drums per EDF-0042. Also added references of the EDF advocating the use of plywood to stack drums. Incorporate changes from comment resolution review.
26	06/21/06	Various	DCR-5055. Incorporated resolutions to CAR 22207 and CAR 22404. Incorporate changes consistent with the annual DSA update implementation.
27	07/11/06	Various	DCR-5121. Made clarifications in steps and notes. Incorporated EDF-0075 information into procedure and added it to references.
27 FC-1	10/19/06	32	DCR-5497. Rewrite step.
27-FC-2	10/23/06	32	DCR-5499. Added new step for OI inspections.
27 FC-3	12/20/06	10	DCR-5639. Added Note for stacking of puck-drums.
27 FC-4	01/22/07	4/40	DCR-5689. Add precautions about storage limitations for non-AMWTP waste streams.

Revision Number	Date Approved	Pages Affected	Description of Revision
28	03/05/07	All	DCR-5701. Incorporated Field Changes 1 through 4. Added pre-job brief and job debriefing steps. Document rewrite including changing steps, changing appendix, editing steps, notes, warnings and cautions. Add new Sections 4.8 and 4.9. Revise Form-1625 to add OI-11 as an implementing document.
28 FC-1	03/30/07	44	DCR-5859. Changed so plywood could be made to fit the box.
28 FC-2	06/25/07	Pages 30, 40 & 41	DCR-6141. CAR 25743. Create uniform closure instruction torque value-Reference to OI-24
28 FC-3	06/26/07	Various	DCR-6150. MP-CMNT-10.22 supersedes INST-CMNT-10.8.2
29	08/28/07	Various	DCR-5960. Incorporate DCRs-5859, -6141, and -6150. Various step changes and additions to incorporate short term instructions, EDF-0195, updated EDF-0066, and for clarity.
29 FC-1	09/04/07	Pages 4, 27	DCR-6373. Revised steps to correctly implement EDF-0066, The Stacking of FRP Boxes, and established minimum staffing requirements for Waste Movement.
29 FC-2	09/5/07	Page 5	DCR-6388. Clarification to Step 3.1.1.15 to implement EDF-0066.
29 FC-3	09/19/07	Pages 32, 61	DCR-6404. Implement ARP Shipment tarpaulin requirements.
29 FC-4	10/4/07	Pages 41, 64	DCR-6489. Add torque value for new cake box style.
29 FC-5	10/24/07	Page 32	DCR-6533. Add verification step to ensure drum IDs match Form-1727.
30	01/10/08	Various	DCR-6537. Incorporate DCRs-6533. 6489, 6404, 6388, 6373. Revised to incorporate EDF-0266, EDF-0273, QA NCR container tagging requirements, and box labeling requirements. Various editorial and formatting changes made for clarity.
30 FC-1	02/15/08	Page 28	DCR-6799. Removed requirement to survey SANDIA boxes with the slip covers in place.

Revision Number	Date Approved	Pages Affected	Description of Revision
30 FC-2	02/27/08	Pages 16 and 29	DCR-6855. Revised Step 3.1.7.2 to include information based on Environmental Manager/ID DEQ interface. Revised Steps 4.1.2.1 and 4.1.2.2 to comply with QA NCR process.
31	03/29/08	Various	DCR-6919. Incorporated DCRs-6799 and -6855. Changes to allow overpacking into SDOPs and ensure SDOPs are built correctly, provide information regarding stacking requirements, clarify roles and responsibilities, rolldowns, pre-job brief, update references, and edit per MP-DOCS-18.1.
31 FC-1	05/14/08	Pages 48 and 57	DCR-7157. Updated IDC list to be consistent with RPT-ESH-014.
31 FC-2	06/12/08	Pages 23 and 55	DCR-7250. Overpacking solid waste matrix drums excluding ARP waste.
31 FC-3	07/10/08	Various	DCR-7357. Note added to provide necessary flexibility in performing steps, and last 3 steps and Caution turned into new Section 4.4.
31 FC-4	09/23/08 (Expires 09/26/08)	4.9.6, 4.9.6.1	DCR-7550. Delete steps as the requirement no longer exists to tarp loads or use curtain trailers when shipping to the SDA.
31 FC-4	10/03/08	Various	DCR-7562. Replace Operator Aid in 4.2.3 with LST-ISIH-03, and add LST to References.
31 FC-5	10/08/08	4.7.1	DCR-7619. Replace Operator Aid in 4.7.1 with LST-ISIH-03.
32	10/01/08	Entire	DCR-7183. Entire document rewrite to remove steps extraneous to waste container handling and add steps regarding proper drum closure, resolving NCR-25136.
33	11/24/08	Various	DCR-7741. Incorporated changes for the newly permitted area of Pad 2, to close CAR 40656, to implement the Fire Hazard Assessment, to clarify stacking requirements, and to assist operations and production planning. Edited per MP-DOCS-18.1.
34	01/15/09	Various	DCR-7843. Incorporated DSA changes. Made minor editorial changes.

Revision Number	Date Approved	Pages Affected	Description of Revision
35	03/19/09	Various	DCR-8062. Changes to allow storage of retrieval pyrophoric material containers, editing per MP-DOCS-18.1.
35 FC-1	3/26/09	Pg 30	DCR-8193. Rewrite Step 4.8.4.4 to include IDC RF-751 and explain storage of pyrophoric material.
35 FC-2	4/16/09	Pg8 and 13	DCR-8258. Step 4.1.2, Bullet 1 and 3 – change wording to meet operational requirements. Page 13 Change label requirements.
36	07/09/09	Various	DCR-8344. Incorporate DCRs-8193 and 8259. Replaced MP-EC&P-7.10 with INST-OI-88, added step for staging containers before end of shift in response to CAR 43874.
37	11/09/09	Various	DCR-8656. Changes due to WTS update, for clarification regarding containers with defects, corrected stacking requirements, edited per MP-DOCS-18.1 and template.
37 FC	03/02/10	17, 18	DCR-9098. Change to require inspection of trailers for ice prior to waste movement. Require boxes and drums to be secured to the trailer with tie-downs and/or cargo nets. Create new IDC for “true” unknown wastes.
38	03/18/10	Various	DCR-9056. Incorporated DCR-9098 with modifications. Changes to allow inspection of straps and cargo nets, clarify exemptions in storage areas, provide instructions for sliding or shifting containers, instructions to additional securement methods and for stacking inverted cakeboxes.
39	07/01/10	Various	DCR-9127. Changes to clarify wording of four straps vs. four legs, to allow process flow where move sheets are not needed, to give direction to OTs and clarifications to match EDF-0737.
40	10/21/10	Various	DCR-9488. Incorporated changes due to Class 1 permit modification.
41	02/03/11	Page 20 & 21	DCR-9704. Added additional IDC changes to table. Made editorial changes to update reference titles and documents that have been superseded.

Revision Number	Date Approved	Pages Affected	Description of Revision
42	03/31/11	Various	DCR-9959. Deleted Form-2017 references (no longer needed), corrected the incompatible IDCs in the table(s); added steps for clarification for half-spacers or half-plywood sheets; and Long-term Order 2011-006 changes. Also made editorial to add the performer for the pre-job and post-job review steps.
43	07/21/11	Various	DCR-10093. Changes to allow storage of pyrophoric materials in WMF-610 and the Type I and Type IIs, added new columns to tables for interim storage for cargo containers for macro encapsulation and 100-/110-gal drums, new section for toaster cover installation, and to implement CWRs from RPT-NFCS-15, SF-1, and SF-2. Implements 2011 annual DSA changes.
43 FC-1	08/09/11	Pg 12	DCR-10319. Added new step 4.1.7.3 to Notify the PSM.
44	09/15/11	Various	DCR-10352. Incorporated FC-1 DCR-10319 change, made step number changes, added wording to incorporate changes to EDF-0266.
45	01/24/12	Various	DCR-10752. Incorporated SCR 4231 change and added definition. Incorporated ITG-Bluesheet-019 changes.
45 FC-1	03/12/12	Pg 13, 39	DCR-11000. Added new section 4.8 to allow operators to install plywood on the base of boxes entering the facility.
46	05/24/12	Various	DCR-10989. Incorporated FC-1 DCR-11000. Made numerous changes for consistency and clarity. Deleted steps that were redundant or unnecessary.
47	08/15/12	Various	DCR-11433. Incorporated 2012 DSA changes.
47 FC-1	12/11/12	Various	DCR-12002. Incorporate FMP-1263. Add barcode label verification per corrective action for duplicate label event and shredder weight recording.

Revision Number	Date Approved	Pages Affected	Description of Revision
48	04/17/13	Various	DCR-11620. Incorporate DCR-12002, FC-1. Added two bullets to allow for reasonable resequencing of boxes on the facility box import trailer and change definition for Actively Managed as set forth by ES&H. Updated conditional, branching, and referencing steps to recently revised MP-DOCS-18.1. Incorporated NSTB-74037 requirements; implemented ESS requirements.
49	06/13/13	Various	DCR-12365. Clarified dual verification of direct feed waste drums and labeling of new/empty 100-gal drums.
50	09/10/13	Various	DCR-12610. Clarify assay error requirements, provide guidance on removing lifting hoops, and add soft overpacks to Appendix A. Added new Section 4.6.
50 FC-1	11/07/13	52	DCR-12899. Define crystals on waste containers to be considered as waste.
51	12/03/13	Various	DCR-12972. Incorporated DCR 12899. Deleted Section 4.6 which is no longer applicable.
52	12/17/13	Various	DCR-13014. Changes made to implement DSA/TSR implementation and DOE O 435.1, to remove JHA roll-downs and to specify storage instructions for SDOPs and MOPs.
53	12/21/13	Step 4.5.3	DCR-13056. Revised section number to Section 4.14.5
54	02/03/14	Step 4.5.4	DCR-13147. Added BN631 to list of IDCs.
55	02/18/14	Various	DCR-13179. Updated Section numbers from 4.15 to 4.14.
55 FC-1	02/26/14	Various	DCR-13195. Incorporate revised drawing for drum stacking using plywood spacers.
55 FC-2	04/03/14	16	DCR-13317. To incorporate steps for using a parrot beak handler and validating closure of drum.
55 FC-3	04/08/14	15, 16	DCR-13353. Delete FC-2. Add expectations for spotters using Parrot Beak.
55 FC-4	04/11/14	15, 16B	DCR-13371. Add allowance for Parrot Beak use to handle TFUP drums.

AMWTP INSTRUCTION		
INST-OI-11, Rev. 57	Issued: 08/01/14	Effective: 08/02/14

Waste Container Handling

Revision Number	Date Approved	Pages Affected	Description of Revision
55 FC-5	04/15/14	8, 16, 16B	DCR-13380. Remove FC-4 for TFUP drums.
56	04/29/14	Various	DCR-13382. Incorporated FC-1 through FC-5. References corrected.
56 FC-1	06/01/14	Pages 48-49	DCR-13486. Added direction and rigor for handling loaded shredder boxes exported from Treatment Facility.
57	08/01/14	Various	DCR-13426. Incorporated 56 FC-1 (DCR-13486). Deleted some steps in Step 3.1 that do not apply or that are already captured in INST-OI-84. Made some other miscellaneous changes to incorporate new requirements or clarify steps. Editorial changes also made.

Real-Time Radiography Examinations (Certification Scans)

(General Use)

Advanced Mixed Waste Treatment Project

Approval:

(*Signature on file. See DCR-13556.*) 08/25/14

Date

AMWTP OPERATING INSTRUCTIONS		
INST-OI-12, Rev. 55	Issued: 08/27/14	Effective: 08/27/14 @ 0700 hr

Real-Time Radiography Examinations (Certification Scans)

TABLE OF CONTENTS

1.0 PURPOSE/SCOPE 1

2.0 ROLES AND RESPONSIBILITIES 1

3.0 PRECAUTIONS AND LIMITATIONS/PREREQUISITES 2

3.1 Precautions and Limitations 2

3.2 Prerequisites 2

4.0 INSTRUCTIONS 2

4.1 General Instructions 2

4.2 Beginning of Shift Activities 3

4.3 Imaging System Check 4

4.4 Operation of RTR System 7

4.5 Real-Time Radiography Examination Guidelines 8

4.6 RTR Examination and WTS Data Entry 11

4.7 Post-Job Review 29

4.8 Abnormal and Infrequent Operations 29

5.0 DEFINITIONS 30

6.0 REFERENCES 32

7.0 RECORDS 33

8.0 EXHIBITS 34

Exhibit 1 – RTR Image Test Quality Grid 35

Exhibit 2 – Waste Material Parameter Descriptions 36

Exhibit 3 – Parameters and Weights of Commonly Identified Items 37

Exhibit 4 – Fill Factor 38

Exhibit 5 – List of Prohibited Items....39

Exhibit 6 – Volume Conversions for Liquids in 55-Gallon Drums....41

Exhibit 7 – Volumes of Cylinders....42

Exhibit 8 – Common Liquid Measurements and Conversions....43

Exhibit 9 – V^2 Nominal Density Guidance Table....44

Exhibit 10 – Volume Conversion Table, Cubic Inches to Pints....45

Exhibit 11 – Volume Conversion for Partial 55-Gallon Drum (in pints)....46

Exhibit 12 – Categorizing Drum Contents during RTR Examination....47

9.0 APPENDICES....47

Appendix A – Burning DVD from Hard Drive....A1

Appendix B – Creating or Transferring Data to the RITA Archival System....B1

Appendix C – Revision Log....C1

AMWTP OPERATING INSTRUCTIONS		
INST-OI-12, Rev. 55	Issued: 08/27/14	Effective: 08/27/14 @ 0700 hr

Real-Time Radiography Examinations (Certification Scans)

1.0 PURPOSE/SCOPE

The AMWTP Real-Time Radiography (RTR) system is a nondestructive examination technique used to verify the physical form of the waste and the absence of *liquids* (see def.) and containerized gases within the contents of radioactive and mixed waste containers. Container types and sizes may include 55-gal, 83-gal, 100-gal, and 110-gal size drums and various size boxes. In addition to identifying the contents of containers, the RTR also provides digital data-recording capabilities. Examination of containers verifies the specific waste matrix code (WMC) and *waste stream* (see def.) description, identifies prohibited items, and estimates each waste material parameter weight as required for disposal at the Waste Isolation Pilot Plant (WIPP). In the case of unlabeled containers, RTR is used to correlate the contents of the container with known waste types and, if possible, assign an item description code (IDC).

This document applies to performing examinations for certification of waste containers on the RTR.

(HWMA/RCRA Permit; MP-TRUW-8.1; MP-TRUW-8.2; CCP-PO-003)

2.0 ROLES AND RESPONSIBILITIES

Performer	Responsibilities
Operations Technician (OT)	• Unless otherwise specified, performs the steps in this instruction.
Shift Supervisor (SS)	• Makes necessary notifications • Logs status changes • Updates the applicable status boards • Performs post-job reviews.

3.0 PRECAUTIONS AND LIMITATIONS/PREREQUISITES

3.1 Precautions and Limitations

3.1.1 The x-ray controller may be turned off at any time; however, if time permits, maintaining the key switch in STAND BY after periods of continuous operation will help ensure adequate cool down before switching off.

3.2 Prerequisites

3.2.1 Personnel operating the RTR are properly qualified in accordance with MP-RTQP-14.4, Personnel Qualification and Certification, by completing the qualification checklist for an RTR operator (QPOT03A0).

(HWMA/RCRA Permit; MP-TRUW-8.1)

3.2.2 The following forms are available:

- Applicable operator log
- Form-1578, Imaging Quality Indicator Verification Form for RTR.

3.2.3 The OT has obtained the recording media (digital video disc [DVD]), as necessary (keys are in the master key locker).

3.2.4 Waste Tracking System (WTS) is available.

3.2.5 A pre-job brief has been performed in accordance with MP-COPS-9.17, Performing Pre-Job Briefings and Post-Job Reviews, as directed by the SS prior to performing work in this procedure.

4.0 INSTRUCTIONS

4.1 General Instructions

4.1.1 **IF** entry into the shielded enclosure is necessary at any point during the performance of this procedure,
GO TO INST-OI-99, Real-Time Radiography Quick Scan—RTR 1001, or INST-OI-115, Real-Time Radiography Unit Operation (WMF-634), as applicable, to enter the shielded enclosure;
THEN RETURN TO the point of departure in the previous section when complete.

4.1.2 **IF** an abnormal or infrequent event is encountered at any point while working this procedure,
GO TO Section 4.8 to respond to the event;
THEN RETURN TO the point of departure in the previous section when complete.

4.1.3 **GO TO** the appropriate procedure section from the following table based on the desired task to be performed,
THEN RETURN TO this step if further activities will be performed:

Task	Section
Beginning of Shift Activities	4.2
Imaging System Check	4.3
Operation of RTR System	4.4
Real-Time Radiography Examination Guidelines	4.5
RTR Examination and WTS Data Entry	4.6
Post-Job Review	4.7
Abnormal and Infrequent Operations	4.8

4.2 Beginning of Shift Activities

4.2.1 **IF** daily safety checks have **NOT** been completed for the current day,
GO TO INST-OI-99 or INST-OI-115 to complete daily safety checks;
THEN RETURN TO Step 4.2.2 when complete.

(ANSI-N43.3)

NOTE: *The WTS will not permit logon if Form-1268, Production Systems Access Request, is not current.*

4.2.2 Log in to the WTS RTR operation navigation screen, if necessary.

4.2.3 Double click the barcode reader icon, if necessary.

NOTE: *An image quality indicator (IQI) is required at system startup prior to examining waste and at least once every 24 hours during continuous operations.*

4.2.4 **IF** an IQI has been completed for the current day, as evidenced on Form-1578,
THEN verify it is complete and compliant by viewing the recording and listening to the audio.

4.2.4.1 **IF** IQI is found to **NOT** be complete and compliant,
THEN notify the SS.

NOTE: *The cart will have to be out in order to mount the IQI test pattern.*

4.2.5 **IF** an IQI image verification is required,
GO TO Section 4.3 and perform the IQI.

4.3 Imaging System Check

4.3.1 Ensure the IQI test pattern is mounted on the cart between the drum centerline and the Flat Panel Digital Radiography Imaging System (FP).

4.3.2 **IF** the RTR Imaging Transfer Application (RITA) is available,
THEN ensure a disk identification (ID) file has been created in the RITA for the current RTR batch by double clicking RITA icon.

4.3.2.1 **IF** a disk has **NOT** been created,
GO TO Appendix B, Creating or Transferring Data to the RITA Archival System, and create the disk;
THEN RETURN TO Step 4.3.2.

4.3.3 Verify the precision of *radiography* (see def.) prior to use by adjusting the image enough to demonstrate compliance with the quality assurance objectives (QAOs) through viewing an image test pattern.

(MP-TRUW-8.1; MP-TRUW-8.2)

4.3.4 Perform an imaging system check daily, prior to use,
AND record on the applicable operator log and Form-1578.

(HWMA/RCRA Permit; MP-TRUW-8.2)

NOTE: *There are a number of controls that will affect the quality of the recorded image (including IQI placement, zoom functions, Automatic Defect Enhancement [ADE] filter, window leveling x-ray focal spot) all of which can be adjusted by the OT. The intent of the IQI evaluation is to demonstrate the imaging system capability to achieve a specified resolution. During RTR imaging of waste containers, the OT has the latitude to adjust these same parameters, as needed, to obtain the best image possible.*

4.3.5 Place the cursor in the first edit box located on the screen of the barcode reader monitor.

4.3.6 **IF** an IQI is required,
THEN enter the IQI number using the following format: mmddyyXXXWWWQ; where mm is the month, dd is the day, yy is the year, XXX stands for IQI, WWW for the RTR System 101 (Z-213-101), RTR System 1001 (RTR-1001) or 106 (Z-213-106), and Q stands for the shift (D for day shift or N for night shift).

4.3.7 Ensure that the x-ray system has been warmed-up in accordance with INST-OI-99 or INST-OI-115
AND the x-ray controller is ready for operation.

NOTE: *The IQI will be recorded on the same recording media for the current RTR batch.*

4.3.8 Select "Start New Cycle" to retrieve barcode data from the barcode window, if necessary.

4.3.9 Select the IQI number to be recorded.

4.3.10 **IF** recording confirmation prompt displays correct ID for recording,
THEN click OK.

4.3.10.1 **IF** recording confirmation prompt displays incorrect ID,
THEN RETURN TO Step 4.3.8.

4.3.11 Generate x-rays in accordance with INST-OI-99 or INST-OI-115.

4.3.12 Position the cart, x-ray tube-head, and FP to center the IQI test pattern.

4.3.13 Adjust the zoom functions, ADE filter, window leveling, kV, and mA, as needed, for image resolution and clarity to obtain a good image of the IQI.

4.3.14 Select red RECORD button on Debut Professional program.

4.3.15 Record verbal comments by speaking into the microphone.

4.3.16 Start IQI recording by stating the operator ID, IQI number, and lines of resolution obtained.

4.3.16.1 To ensure that an acceptable recording has been done, stop x-ray generation prior to viewing the recording.

4.3.16.2 Verify the acceptable recording of the IQI and the audio/video recording.

4.3.16.2.1 **IF** the audio/video recording was **NOT** acceptable,
THEN contact the SS.

4.3.17 Record IQI results and the number corresponding to the crosshatched pattern visible in both the horizontal and vertical directions on the applicable operator log (see Exhibit 1, RTR Image Test Quality Grid, for RTR image test grid figure) and Form-1578.

4.3.18 Record RTR settings (voltage and current) on Form-1578.

NOTE: *Verification of the resolution is with visual confirmation by the OT. The recorded image may not represent the actual image due to degradation from the recording.*

4.3.19 **IF** the resolution is less than 16 lines/inch,
THEN contact the SS
AND troubleshoot.

4.3.20 Press the red X-RAY OFF button on the x-ray controller unit panel, if applicable,
AND turn the x-ray control console key to the STAND BY position.

4.3.21 **IF** leaving the RTR control room,
THEN perform the following:

4.3.21.1 Remove the x-ray control console key.

4.3.21.2 Maintain the x-ray control console key either under the operator control or store it in the master key locker.

4.4 Operation of RTR System

4.4.1 Check initial conditions as follows:

4.4.1.1 Ensure that Sections 4.2 and 4.3 are completed as needed prior to RTR container examination operations.

NOTE 1: *To ensure that liquid in a waste container is not frozen during RTR examination, the waste is preheated for a minimum of 72 hours at 18ºC or higher during cold weather, in an approved heated building. Preheating requirements will be based on monitoring approved test bottles stored in an unheated building.*

NOTE 2: *After a container has met the 72-hour preheat requirement it can be moved into WMF-610/WMF-634 for RTR examination ensuring that the building to building transit time is <6 hours.*

NOTE 3: *After a container has met the 72-hour preheat requirement, the temperature in the building where it is stored may fall below 18°C for any period of time, as long as it does not fall below 1°C.*

4.4.1.2 **IF** preheating is required,
THEN ensure that the waste package has been preheated for a minimum of 72 hours at 18ºC or higher, per WTS, prior to loading onto the RTR cart.

(HWMA/RCRA Permit)

4.4.1.3 **IF** preheating is required
AND WTS is **NOT** available,
THEN use an alternative means to verify that preheat requirements have been met.

(HWMA/RCRA Permit)

4.4.2 Ensure that the x-ray system has been warmed up in accordance with INST-OI-99 or INST-OI-115, and the x-ray controller is ready for operation.

4.4.3 In the Vi3 program, select "Start New Cycle" to retrieve barcode data from the barcode window, if necessary.

4.4.4 **IF** the barcode data has already been retrieved for the cycle of drums being examined,
THEN select "Select Next Drum," if necessary.

4.4.5 **IF** recording confirmation prompt displays correct ID for recording,
THEN click OK.

4.4.5.1 **IF** recording confirmation prompt displays incorrect ID,
THEN RETURN TO Step 4.4.3.

4.4.6 **IF** RITA is available,
THEN ensure a disk ID file has been created in RITA for the current RTR batch by double clicking RITA icon.

4.4.6.1 **IF** a disk has **NOT** been created,
GO TO Appendix B and create a disk;
THEN RETURN TO Step 4.4.7.

4.4.7 Start generating x-rays in accordance with INST-OI-99 or INST-OI-115.

4.4.8 Ensure that the desired container is in view of x-ray image by viewing screen parameter (i.e., 1/4 position; one of four drums [systems in WMF-634]; one of three drums in WMF-610).

4.5 Real-Time Radiography Examination Guidelines

NOTE 1: *Complete scans of the waste container are required. A complete container scan for a drum is defined as across the entire top, through the center of the waste from the top to the very bottom, going from side to side in overlapping layers if needed, across the bottom, and up the side of the container. A complete scan for a box is going across the box from end to end, in overlapping layers as needed, to the bottom of the box, then rotating the box 180 degrees and repeating the process. 100% of each container is scanned to meet the radiography QAO for completeness. A 55-gallon drum over-packed into a larger container needs to be the focus of the RTR inspection for characterization purposes. The overpack container needs to be scanned to determined treatment options. All the data is collected and evaluated to complete the WTS and have a complete scan.*

(MP-TRUW-8.1; MP-TRUW-8.2)

NOTE 2: *Exhibits 2, Waste Material Parameter Descriptions; 3, Parameters and Weights of Commonly Identified Item; 6, Volume Conversions for Liquids in 55-Gallon Drums; 7, Volumes of Cylinders; 8, Common Liquid Measurements and Conversions; 9, V^2 Nominal Density Guidance Table; 10, Volume Conversion Table, Cubic Inches to Pints; 11, Volume Conversion for Partial 55-Gallon Drum (in pints); and 12, Categorizing Drum Contents During RTR Examination, may be used, as needed, as an aid during inspections.*

NOTE 3: *Sections 4.5 and 4.6, and steps within these sections, may be performed concurrently, out of sequence, or repeated during the examination of the waste container, as applicable. All the required data will be captured in WTS and on the audio/visual record. WTS will not save the record if any of the required data is not populated in WTS.*

NOTE 4: *The replicate scan is conducted by a qualified RTR OT who was not involved in the original scan of the waste container and documented in WTS.*

NOTE 5: *The original and replicate scans should be completed during the same work day.*

4.5.1 Perform replicate scan on one waste container per day or once per testing batch, whichever is less frequent, under uniform conditions and procedures.

(MP-TRUW-8.1; MP-TRUW-8.2)

4.5.1.1 **WHEN** the replicate scan has been completed,
THEN compare results with operator who performed the original scan, using the RTR Replicate Comparison Report.

4.5.1.2 Replicate and Original Scan Operators: **IF** there are **NO** significant differences identified from the comparison,
THEN complete and sign the RTR Replicate Comparison Report in WTS.

4.5.1.3 Replicate and Original Scan Operators: **IF** there are significant differences identified from the comparison,
THEN perform the following:

4.5.1.3.1 Update the analysis report (either operator) as needed.

4.5.1.3.2 Complete the RTR Replicate Comparison Report in WTS.

4.5.1.4 Replicate and Original Scan Operators: **IF** there are significant differences that **CANNOT** be resolved, **THEN** contact the RTR SME.

4.5.1.4.1 RTR SME: Review the RTR Replicate Comparison Report, resolve any issues, and document results in WTS.

NOTE 1: *The independent observation is conducted by a qualified RTR OT who was not involved in the original scan of the waste container and documented in WTS.*

NOTE 2: *The original scan and the independent observation should be completed during the same work day.*

4.5.2 Perform an independent observation on one waste container (which must **NOT** be the same container that was used for the replicate scan) once per day or once per testing batch, whichever is less frequent, under uniform conditions and procedures.

(MP-TRUW-8.1; MP-TRUW-8.2)

4.5.2.1 **WHEN** the independent observation has been completed, **THEN** compare results with the operator who performed the original scan.

4.5.2.2 Independent Observation and Original Scan Operators: **IF** there are **NO** significant differences identified from the comparison,
THEN complete and sign the independent observation comparison report in WTS.

4.5.2.3 Independent Observation and Original Scan Operators: **IF** there are significant differences identified from the comparison,
THEN perform the following:

4.5.2.3.1 Update the analysis report (either operator) as needed.

4.5.2.3.2 Complete the independent observation comparison report in WTS.

4.5.2.4 Independent Observation and Original Scan Operators: **IF** there are significant differences that **CANNOT** be resolved, **THEN** contact the RTR SME.

4.5.2.4.1 RTR SME: Review the independent observation comparison report, resolve any issues, and document results in WTS.

4.5.3 Adjust Image Enhancement System to attain optimum image quality by:

- Increasing or decreasing the x-ray kV and/or mA, as needed
- Adjusting the zoom functions, as required, to characterize small objects
- Adjusting window leveling as needed to achieve desired penetration and image quality
- Shaking containers along the horizontal axis to detect the presence of liquids.

4.5.3.1 **IF** necessary,
THEN refer to INST-OI-99 or INST-OI-115 for additional guidance for attaining optimum image quality.

4.6 RTR Examination and WTS Data Entry

NOTE 1: *Nonconformance reports (NCRs) are not required to be generated as part of a replicate or operator independent observation examination.*

NOTE 2: *An audio/video recording of the radiography examination and a validated radiography data form in the WTS will be obtained for 100% of the waste containers subject to radiography. The contents of the waste container will be described in sufficient detail on the audio/video record to provide an adequate inventory of the waste container contents in the audio/video record narrative.*

(MP-TRUW-8.1; MP-TRUW-8.2)

NOTE 3: *The RTR examination is recorded in both the WTS and in the audio/video record.*

(HWMA/RCRA Permit)

4.6.1 Verify the correct container number.

NOTE: *Step 4.6.2 may be performed by either typing in the container number and using F8 to query the information or selecting the appropriate container number from the list of values and clicking the mouse in the "Recording ID" field.*

4.6.2 Enter the container ID number in WTS
AND query the container information.

4.6.3 Verify that the container data and analysis information have auto-populated in the container information section of the WTS RTR record (i.e., batch number, container type, RTR date).

4.6.4 **IF** any of the required fields are **NOT** populated,
THEN contact the SS for guidance.

4.6.5 Verify that the "Equipment" field for the processing area for WTS has auto-populated.

4.6.6 Verify the current procedure and revision number.

4.6.7 **IF** the revision number of the procedure is incorrect in WTS,
THEN enter the procedure number and current revision used to conduct the examination in the "Result Comment" field in WTS.

4.6.8 Ensure the Recording ID is correct.

4.6.9 Enter the identification in the format: WXXXyy-nnnnn; where W stands for RTR system one (Z-13-101) or two (Z-13-106), or three (RTR-1001), XXX stands for RTR, yy is the year, and nnnnn is the disk number.

NOTE: *The QAO for precision at RTR is verified upon satisfactory completion of an IQI test at least once every 24 hours or upon system start-up as specified in Section 4.3, by verifying that the audio/video record of the IQI has been recorded and by answering YES to the question: "Is the Image Quality Indicator Satisfactory?"*

4.6.10 Enter YES/NO in WTS to the question "Is the Image Quality Indicator Satisfactory?"

(MP-TRUW-8.1; MP-TRUW-8.2)

4.6.11 Select red RECORD button on Debut Professional program.

4.6.12 Enter as an introduction for the examination of the waste container the following:

- Operator ID
- Container ID
- IDC
- WMC
- Waste stream description as defined in RPT-TRUW-05, Waste Matrix Code Reference Manual, in the audio/video record
- Waste **NOT** covered in RPT-TRUW-05 or other approved applicable acceptable knowledge (AK) documents and report.

(HWMA/RCRA Permit)

4.6.13 Ensure that the replicate is completed on one container per day or once per testing batch, whichever is least frequent, as on the applicable operator log and in WTS.

(MP-TRUW-8.1; MP-TRUW-8.2)

4.6.13.1 **IF** a Debut Professional program "File already exists replace existing file?" pops up,
THEN answer NO.

4.6.14 Ensure that a qualified RTR OT who was **NOT** involved in the original scan performs the replicate scan.

(MP-TRUW-8.1; MP-TRUW-8.2)

NOTE: *The independent observation is performed by viewing the recording from a waste container (not the replicate), and documenting the results on a radiography analysis sheet in WTS. The independent observation is performed without reference to the original radiography analysis sheet in WTS.*

4.6.15 Ensure that the independent observation analysis is completed on one container (not the replicate) per day or once per testing batch, whichever is least frequent, as documented on the applicable operator log and in WTS.

(MP-TRUW-8.1; MP-TRUW-8.2)

4.6.16 Ensure that a qualified RTR OT who was **NOT** involved in the original scan of the waste performs the independent observation.

(MP-TRUW-8.1; MP-TRUW-8.2)

NOTE: *The purpose of checking the visual class inspection form is to assist the RTR OT in looking for pinhole(s) and/or weakness in the container wall.*

4.6.17 **IF** the visual class inspection form is available in WTS,
THEN perform the following:

4.6.17.1 Review the form to see the container classification.

4.6.17.2 Look for pinhole(s) and/or weakness in the container wall.

4.6.17.3 **IF** pinholes and/or weakness are found,
THEN perform the following:

4.6.17.3.1 Notify the SS.

4.6.17.3.2 Document the finding in WTS.

4.6.17.3.3 Handle the container as directed by the SS.

NOTE: *Although cardboard liners do offer protection for sharp objects, as determined by the RTR operator, they are not considered as "liners" for headspace gas drum age criteria and are considered as cellulosic waste.*

4.6.18 **IF** examining drums,
THEN determine whether a plastic or a 90-mil liner is present
AND enter the appropriate answer (YES/NO) in WTS.

4.6.19 **IF NO** liner is present,
GO TO Step 4.6.24 and enter the fill factor for the waste container
WITHOUT RETURNING TO this step.

4.6.20 Enter in WTS whether the liner lid is present.

NOTE 1: *The liner is considered punctured if there is a minimum 0.3-inch diameter unblocked opening in the liner and/or if any set of vent holes in the filter are below the liner lid, above the waste, and unobstructed.*

NOTE 2: *When the liner is punctured, the deformed liner answer will not affect the exam plan for the container because the deformed liner does not affect the headspace gas sampling (HGAS) data since the liner is verified punctured.*

4.6.21 **IF** the liner is punctured,
THEN enter YES in "Liner Punctured" field.

4.6.21.1 Enter NO in "Liner Lid Deformed or Warped" field.

4.6.21.2 **GO TO** Step 4.6.23 and enter the appropriate liner type in WTS
WITHOUT RETURNING TO this step.

4.6.22 **IF** the liner is **NOT** punctured or it **CANNOT** be verified punctured,
THEN enter NO in "Liner Punctured" field
AND enter either YES or NO in "Liner Lid Deformed or Warped" field based on the RTR operator's judgment.

(CCP-PO-003; MP-TRUW-8.2)

4.6.22.1 Initiate an NCR in accordance with MP-Q&SI-5.4, Identification of Nonconforming Conditions.

4.6.22.2 **IF** the drum has been processed through HGAS as indicated on the task list,
THEN add comments to the NCR for impact to the HGAS data.

4.6.23 Enter the appropriate liner type in WTS, as listed in table below:

Liner Type	Description
I	Straight wall liner with a rolled lip to the inside
II	Tapered shoulder liner with a slip fit cap, closure sealed with metal band
III	Tapered shoulder liner with a metal bolt closure ring
IV	Straight wall liner with a slip fit lid
Plastic	Plastic liner approximately 35 mil in thickness
Other	Any other type of liner type that is **NOT** identified above

NOTE: *Fill factor of container is based on an estimate of the amount of waste present, "leveled out and uncompacted."*

4.6.24 Enter the fill factor for the waste container (in percent) in WTS, using Exhibit 4, Fill Factor, to estimate fill percentage.

NOTE: *The "twisted and tied" or "zipped and tied" closure methods are entered as "twisted and taped."*

4.6.25 Enter the closure method(s) for the waste container and inner packages in WTS.

(CCP-PO-003)

NOTE: *Sealed containers >4 liters are considered a layer of confinement.*

4.6.26 Determine the layers of confinement for the waste container **AND** enter in WTS.

(CCP-PO-003)

4.6.27 Enter the presence of liquids by selecting YES in WTS.

(HWMA/RCRA Permit)

4.6.28 Enter the volume and location of liquids in WTS.

(HWMA/RCRA Permit)

NOTE 1: *Observable liquid in association with an identified polychlorinated biphenyl (PCB) item or PCB waste is considered PCB-contaminated liquid and is dispositioned for treatment or special-case waste (SCW).*

NOTE 2: *Observable liquid in association with waste streams identified in RPT-TRUW-05 as having U-134 (hydrofluoric acid) present, are prohibited from shipment to WIPP. These containers will be dispositioned for treatment or SCW.*

NOTE 3: *If observable liquid is within pressurized aerosol container(s), and the total volume of observable liquid is less than 49 mL, the waste container can be designated for supercompaction through the facility. The acceptance criteria are defined in Exhibit 5, List of Prohibited Items.*

NOTE 4: *Mixed waste container(s), with a total volume of observable liquid less than 5% by volume of the waste container, can be designated for supercompaction through the facility. The acceptance criteria are defined in Exhibit 5.*

(1291-2013-011, CWR 1)

4.6.29 **IF** observable liquid is prohibited as defined in Exhibit 5
OR is equal to or greater than 4.4 pints,
THEN record the presence of prohibited liquids in WTS by selecting YES.

(HWMA/RCRA Permit MP-TRUW-8.1; MP-TRUW-8.2; CCP-PO-003)

4.6.30 **IF** observable liquid is noted
AND the total liquid is **NOT** prohibited,
THEN enter NO for prohibited liquids.

NOTE: *Item 10 of Exhibit 8 provides a conversion for mL to pints.*

4.6.31 **WHEN** *internal containers* (see def.) with observable liquid are present,
THEN enter YES for internal container with liquid.

4.6.32 **IF** prohibited liquids are identified,
THEN initiate an NCR in accordance with MP-Q&SI-5.4.

(HWMA/RCRA Permit)

4.6.32.1 Select the NCR, RTR Characterization for Liquids, and the applicable "Liquids Identified" category as observed in the RTR examination.

NOTE: *When the selection is YES, the exam plan is updated to a disposition of liquid absorbent addition.*

4.6.33 **IF** examining a drum,
THEN document if the waste container is a liquid absorbent candidate drum as evidenced by liquid on top of the waste.

4.6.34 Document the absence or presence of sharp or non-braced objects that could be a puncture hazard to the waste container in WTS.

NOTE 1: *A drum rigid liner provides protection from sharp or non-braced objects that could be a puncture hazard to the waste container.*

NOTE 2: *Although cardboard liners do offer protection for sharp objects, as determined by the RTR operator, they are not considered as "liners" for headspace gas drum age criteria and are considered as cellulosic waste.*

NOTE 3: *Sharp or non-braced objects in drums that are not protected will be treated through super compaction or payload overpack as implemented through the task list; therefore, NCRs are not required to ensure remediation.*

(CCP-PO-003)

4.6.35 Document in WTS if sharp or non-braced objects are protected.

4.6.36 Document the absence or presence of PCBs in WTS by performing the following:

(HWMA/RCRA Permit)

4.6.36.1 **IF** PCBs are **NOT** present,
THEN document NO for PCBs present in WTS.

(40 CFR 761)

NOTE 1: *Polychlorinated biphenyls in* Summary Category S5000 *(see def.) are prohibited in any amount.*

NOTE 2: *Only* Summary Category S3000 *(see def.) and* S4000 *(see def.) containers without liquid will be answered as "Yes Acceptable" for PCBs present.*

4.6.36.2 Document S5000 containers with any amount of PCBs as "Yes - Prohibited"
AND initiate an NCR in accordance with MP-Q&SI-5.4.

4.6.36.3 **IF** PCBs present is "Yes - Acceptable"
AND the WMC is a Summary Category Group 3000/4000 container,
THEN document the non-prohibited PCBs by performing the following:

4.6.36.3.1 Document a description of non-prohibited PCB(s) in the PCB comment field.

4.6.36.3.2 Document weight of non-prohibited PCBs in the "PCB Mass" field.

4.6.36.3.3 Ensure that the non-prohibited PCBs are included in the waste container inventory with a description, item weight, and assignment to the applicable waste parameters field.

4.6.36.4 **IF** prohibited PCBs present are "Yes - Prohibited,"
THEN perform the following:

4.6.36.4.1 Document a description of prohibited PCBs in the PCB comment field.

4.6.36.4.2 Document the net weight of the drum in the "PCB Mass" field.

4.6.36.4.3 Ensure that the prohibited PCBs are included in the waste container inventory with a description, item weight, and assignment to the applicable waste parameters.

4.6.36.4.4 Initiate an NCR in accordance with MP-Q&SI-5.4.

(MP-TRUW-8.1)

4.6.36.5 **IF** examining BOXES,
THEN answer the following container questions on the WTS CONTENTS BOX tab in WTS, as applicable.

- HEPA Filters?
- Graphite?
- Metal Debris?
- Paper/Rags?
- Plastics/PVC/Rubber?
- Electrical Conduits or Wiring?
- Scaffolding Poles or Planks?
- Heavy, Dense Objects?
- Steel/Metal Rods or Bars?
- Bulky, Shreddable Objects?
- Concrete/Bricks/Solids?

4.6.36.5.1 **IF** Heavy Dense Objects or Concrete/Bricks/Solids are YES,
THEN include an approximate dimension in the description.

NOTE: *The notation of the items in the following step is not a WIPP requirement. However, the presence of any of these, when applicable, is entered into the Comments field in the event that assay reveals the waste to be a candidate for Nevada National Security Site (NNSS) Waste Acceptance Criteria.*

(DOE/NV-325)

4.6.36.6 Document the presence of the following in the "Result Comment" field to identify additional prohibited items from LST-LLW-04, Low-Level Waste and Mixed Low-Level Waste Prohibited and Restricted Items, that are not already accounted for by WIPP criteria in WTS to support NNSS Waste Acceptance Criteria requirements:

- Etiological agents (e.g., blood, medical waste)
- Radioactive sealed sources (e.g., radiation instrument check sources, smoke detectors)
- Animal carcasses.

NOTE: *Mercury is not prohibited unless the criteria for prohibited observable liquid are exceeded.*

4.6.37 Document in WTS the absence or presence of the following:

- Mercury
- Lead, and in what form
- Wet cell batteries.

NOTE 1: *Lead content needs to be identified and listed as a hazardous material in the data package prepared for each WIPP certifiable container (e.g., leaded rubber gloves, lead aprons, lead bricks).*

NOTE 2: *Containers with lead liners (lead tape, shielding), and/or impenetrable objects that prevent full examination of the contents to verify the absence of prohibited items will be subject to visual examination (VE). Waste Tracking System will update the exam plan to require VE of the waste.*

(MP-TRUW-8.2)

NOTE 3: *When examining containers that have waste that prevents full examination of a waste item (e.g., dense items such as check weights, concrete, and calorimeter cans) or of the remaining contents that may inhibit full examination, AK information may have determined that VE would not provide additional relevant information for that container (e.g., an aggregate of bulk-loaded dense sludge).*

(MP-TRUW-8.1; MP-TRUW-8.2)

NOTE 4: *Lead shielding cannot be used to shield an item or waste container to meet external surface dose rates.*

(MP-TRUW-8.1)

NOTE 5: *When examining containers whose contents prevent full examination, such as multiple dense sludge containers or over-packed into a box, an NCR will be written that container contents could not be confirmed.*

4.6.37.1 **IF** a container has impenetrable objects that prevent full examination,
THEN initiate RTR NCR in accordance with MP-Q&SI-5.4.

4.6.37.2 **IF** any of the items listed in Step 4.6.37 are detected,
THEN enter a comment in the appropriate comment field in WTS.

4.6.38 Document in WTS the presence of prohibited items in the waste, if any, using Exhibit 5.

(MP-TRUW-8.1; MP-TRUW-8.2; CCP-PO-003)

4.6.39 **IF** any prohibited items are present, in accordance with Exhibit 5,
THEN perform the following:

4.6.39.1 Initiate an NCR in accordance with MP-Q&SI-5.4.

4.6.40 Examine the waste
AND enter data into WTS with the description, weight, and the assignment to the appropriate waste parameters by performing the following:

4.6.40.1 Select item(s) from look-up table when appropriate
AND enter quantity.

4.6.40.2 **IF** item is **NOT** shown on look-up table,
THEN perform **ONE** of the following to add the waste item(s) to the container inventory:

4.6.40.2.1 **IF** entering item(s) by weight,
THEN perform the following:

4.6.40.2.1.1 Enter description.

4.6.40.2.1.2 Enter item type as weight.

4.6.40.2.1.3 Enter weight.

4.6.40.2.1.4 Enter quantity.

4.6.40.2.1.5 Assign the appropriate waste parameter(s) by percentage weight.

4.6.40.2.2 **IF** entering item(s) by volume,
THEN perform the following, referring to Exhibits 6, 7, 9, 10, and 11:

4.6.40.2.2.1 Enter description.

4.6.40.2.2.2 Enter item type as volume.

4.6.40.2.2.3 Enter weight per unit volume.

4.6.40.2.2.4 Enter quantity.

4.6.40.2.2.5 Assign the appropriate waste parameter(s) by percentage weight.

4.6.40.2.3 **IF** entering item(s) as packaging materials,
THEN perform the following:

4.6.40.2.3.1 Enter description.

4.6.40.2.3.2 Enter item type as packaging.

4.6.40.2.3.3 Enter weight.

4.6.40.2.3.4 Enter quantity.

4.6.40.2.3.5 Assign the appropriate waste parameter(s) by percentage weight.

4.6.40.3 **IF** examining BOXES,
THEN after completing the RTR examination of the first side of the box, pause the audio/video recording.

4.6.40.3.1 Press the red X-RAY OFF button on the x-ray controller.

4.6.40.3.2 Turn the x-ray controller key to the STAND BY position.

4.6.40.3.3 **IF** leaving the RTR control room,
THEN perform the following:

4.6.40.3.3.1 Remove the x-ray key.

4.6.40.3.3.2 Maintain the key under operator control
OR store it in the master key locker.

4.6.40.3.4 **GO TO** INST-OI-99 or INST-OI-115 to rotate the box;
THEN RETURN TO Step 4.6.40.3.5 to continue the examination of the box.

4.6.40.3.5 Resume x-ray generation in accordance with INST-OI-99 or INST-OI-115.

NOTE: *Steps in Section 4.5 and 4.6 may be repeated or performed out of sequence during the examination of the waste container*.

4.6.40.3.6 Continue examination of the box per Sections 4.5 and 4.6.

NOTE: *The weight assigned to the remaining waste is assigned by subtracting the packaging, and item(s) entered by weight/volume, from the gross weight and then distributing this remaining unassigned weight to the appropriate waste parameters by the designated percentage weight assigned for the remaining waste. Remaining waste = Gross – (Packaging + Items by Weight + Items converted from volume to weight).*

4.6.40.4 Assign the remaining waste to the appropriate waste parameter by weight percent on the "Remaining Contents of Container Table."

4.6.40.4.1 In the "Result Comment" field, enter a description of the waste that was entered under the "Remaining Contents of Container Table."

(MP-TRUW-8.1)

NOTE: *Following RTR, containers with the 000 IDC are typically assigned the UN-00A for undefined homogenous solids (S3000), UN-00B for undefined debris (S5000), or UN-00C for undefined soil/gravel (S4000).*

(HWMA/RCRA Permit)

4.6.41 Verify that the physical form of the waste is consistent with the IDC, WMC, summary category, and waste stream description (as defined in RPT-TRUW-05, or for waste **NOT** covered in RPT-TRUW-05, other approved applicable AK documents and reports) for the waste container and recorded correctly in WTS.

(MP-TRUW-8.1; MP-TRUW-8.2)

4.6.41.1 **IF** the IDC is verified
AND the historical ID found in WTS does **NOT** match the information on the container, as identified when the container was loaded on the cart per the INST-OI-99 or INST-OI-115,
THEN initiate a Type 3 NCR in accordance with MP-Q&S-5.4.

NOTE: *Answering the question "Is IDC Correct?" allows information required by Steps 4.6.42 and 4.6.43 to be entered.*

4.6.42 **IF** the IDC, WMC, summary category, or waste stream description **CANNOT** be verified,
THEN perform the following:

4.6.42.1 Place a UN-000 code for undetermined waste, UN-00A for undefined homogenous solids (S3000), UN-00B for undefined debris (S5000), or UN-00C for undefined soil/gravel (S4000) in the "Recommended Gen-IDC" field.

4.6.42.2 Enter the change reason comment of undefined IDC.

4.6.42.2.1 Describe the waste in sufficient detail to allow the acceptable knowledge expert (AKE) to evaluate a recommended IDC determination in the "Result Comment" field or using the "Container Markings" screen button at the bottom of the general section in the RTR screen.

4.6.42.3 Record any historical information from the container on the "AMWTP Container Screen" in the "Add New Container Comment" field,
OR use the CONTAINER MARKINGS button found at the bottom of the "AMWTP Container Screen," or the CONTAINER MARKINGS button at the bottom of the "General" tab in the RTR screen.

NOTE: *An IDC change is not required if the proposed change is to another IDC within the same direct-ship waste stream (e.g., BN-304: Mound Debris: IDCs MD-801, -802, -803, -804, -805, -810, -813, -814, -825, -827, and -848; BN-211: RFP filter debris waste: IDCs RF-335, -338, -376, and -490).*

4.6.43 **IF** the IDC is **NOT** correct,
THEN perform the following:

4.6.43.1 Enter recommended IDC
AND assign the containers to AK review.

4.6.43.2 Enter change reason (example: % volume of contents).

4.6.43.3 Enter any applicable comments.

4.6.43.3.1 Describe the waste in sufficient detail to allow the AKE to evaluate a recommended IDC determination in the "Result Comment" field or using the CONTAINER MARKINGS screen button at the bottom of the general section in the RTR screen.

4.6.43.4 Record any historical information from the container on the "AMWTP Container Screen" in the "Add New Container Comment" field
OR use the CONTAINER MARKINGS button found at the bottom of the "AMWTP Container Screen," or the CONTAINER MARKINGS button at the bottom of the "General" tab in the RTR screen.

4.6.44 **WHEN** the scan is complete,
THEN summarize the examination by stating the operator identification, container ID, and whether the IDC, WMC, and waste stream description are consistent with the AK.

4.6.45 Stop or pause the recording, as necessary.

4.6.46 Perform an audio/visual check of the recorded image to verify that the recording device is properly working.

4.6.46.1 Enter Y/N in WTS to the question "Is the Audio/Visual Check Satisfactory?"

NOTE: *The RTR recording will be reviewed against the data reported on the RTR container data in the WTS.*

4.6.47 Perform the following to sign the RTR record:

4.6.47.1 Verify that the data in WTS is correct and that the audio/visual recordings match and are correct.

4.6.47.2 E-sign
AND save RTR record.

4.6.47.3 Check audio and video recording.

4.6.48 **IF** RITA is available,
THEN transfer recording files to the RITA Archival System using the guidance provided in Appendix B.

NOTE 1: *After the burning DVD from hard drive process has started, WINDOWS may be minimized and operations continued.*

NOTE 2: *Typical burning of files associated with current batch is done one file at a time; multiple files can be burned at the same time.*

NOTE 3: *All containers burned to DVD have an audio/video check performed.*

4.6.49 If needed, burn file of drum to DVD using the guidance provided in Appendix A, Burning DVD from Hard Drive, or at the SS discretion.

4.6.49.1 **WHEN** "Burning DVD from Hard Drive" has started,
THEN minimize the "Nero Essentials" window
AND continue operations.

4.6.49.2 Upon completion of the burning process, check audio and visual recording on the DVD, prior to burning the next container.

4.6.49.3 **IF** examining drums,
AND additional drums are on the cart that need to be examined,
THEN advance the cart to the next drum
AND RETURN TO Section 4.4.2.

4.6.50 **WHEN** all containers on the cart have been examined,
THEN ensure x-rays are turned off by depressing the red X-RAY OFF pushbutton located on the x-ray control unit.

4.6.51 **GO TO** applicable unit operating instruction to export, unload, and reload the cart as necessary;
THEN RETURN TO Step 4.6.52.

NOTE: *For a WTS batch, an automatic closure will occur after 20 drums (22 examinations including the replicate and independent observation) are processed. Waste Tracking System batch data reports contain the required contents identified by Table C3-11 of MP-TRUW-8.2, Quality Assurance Project Plan.*

4.6.52 Label the unloaded container(s) for PCBs, as applicable, in accordance with INST-OI-24, Packaging Newly Generated Radioactive Waste.

4.6.53 **RETURN TO** Section 4.4 to examine additional waste containers.

4.7 Post-Job Review

4.7.1 SS or Designee: Perform a post-job review in accordance with MP-COPS-9.17.

4.8 Abnormal and Infrequent Operations

WARNING

Abnormalities with the x-ray equipment could cause radiological exposure and injury/death.

CAUTION

Abnormalities with the x-ray equipment could cause damage to equipment.

NOTE: *Applicable steps may be performed when needed.*

4.8.1 **IF** any abnormalities that could cause damage to equipment, personnel, or the environment are encountered with the x-ray equipment, **THEN** perform the following:

4.8.1.1 Push the red EMERGENCY STOP button.

4.8.1.2 **GO TO** INST-OI-99 or INST-OI-115 for additional actions related to operation of the RTR unit.

4.8.2 **GO TO** INST-OI-99 or INST-OI-115 for abnormal or infrequent operations related to the operation of the RTR unit.

4.8.3 **IF** other abnormal or infrequent operations need to be performed,
GO TO the applicable section from the following table;
THEN RETURN TO this step if further activities will be performed:

Task	Section
Breached (see def.) Waste Container	4.8.4
Fire Involving the Characterization Facility	4.8.5

4.8.4 Breached Waste Container

4.8.4.1 Stop x-rays.

4.8.4.2 Turn x-ray controller key to STAND BY.

4.8.4.3 Remove the key.

4.8.4.4 Respond per INST-OI-11, Waste Container Handling.

4.8.4.5 Notify the SS.

4.8.5 Fire Involving the Characterization Facility

4.8.5.1 Stop x-rays.

4.8.5.2 Turn x-ray controller key to STAND BY.

4.8.5.3 Remove the key.

4.8.5.4 Evacuate
AND inform the SS or designated alternate.

4.8.5.5 While exiting, pull the manual fire alarm.

5.0 DEFINITIONS

Breach. Any physical degradation in the structural soundness of a container that could potentially lead to a *release* (see def.) of contamination. A breach is a hole in the container that can lead to leaks, *spills* (see def.), or releases.

Internal container. For purposes of this document, a container inside the outermost container examined during radiography. Drum liners, liner bags, plastic bags used for contamination control, capillary-type labware, and debris not designed to hold liquid at the time of original waste packaging are not internal containers for the purposes of WIPP acceptance.

(MP-TRUW-8.1; MP-TRUW-8.2)

Liquids, observable (or liquid). Liquid that can be seen by a trained radiography operator or by a trained individual performing VE on the waste. This term can be implemented consistently during characterization regardless of waste type.

Radiography. A non-destructive testing method that uses x-rays to inspect and determine the physical form of waste.

Release. Any identifiable waste that has spilled, leaked, poured, emitted, emptied, discharged, injected, pumped, escaped, leached, dumped, or disposed of into environment media and is not contained by permitted secondary containment, or other permitted engineering controls; (for e.g., air borne radiological contamination inside of a Type II module, or waste spilled onto the road between buildings).

Spills. Waste including packaged waste (e.g., polybags or bottles) that has discharged, escaped, emptied, leached, etc. out of its container and has contacted other surfaces, for example, material from inside the primary container that has left its container surface and has contacted any other surface. In addition, a spill is any radiological contamination found outside a posted contamination area, high contamination area, or airborne radioactivity area, or radiological contamination found in a posted area that exceeds suspension limits of the work control document.

Summary Category S3000 – Homogeneous Solids. Homogeneous solids, or solid process residues, are defined as solid materials, excluding soil, that do not meet the NMED criteria for classification as debris (20.4.1.800 NMAC, Adoption of 40 CFR 268, (incorporating 40 CFR 268.2, Land Disposal Restrictions, Definitions Applicable in this Part [g] and [h]). Included in the series of solid process residues are inorganic process residues, inorganic sludges, salt waste, and pyrochemical salt waste. Other waste streams are included in this summary category group based on the specific waste stream types and final waste form. This summary category group is expected to contain toxic metals and spent solvents. This category includes wastes that are at least 50% by volume solid process residues.

Summary Category S4000 – Soils/Gravel. This summary category group includes S4000 waste streams that are at least 50% by volume soil/gravel. This summary category group is expected to contain toxic metals. Soils/gravel are further categorized by the amount of debris included in the matrix.

Summary Category S5000 – Debris Wastes. This summary category group includes heterogeneous waste that is at least 50% by volume materials that meet the criteria specified in 20.4.1.800 NMAC, (incorporating 40 CFR 268.2 [g]). Debris means solid material exceeding a 2.36-inch (60 mL) particle size that is intended for disposal and is:

1. A manufactured object
2. Plant or animal matter
3. Natural geologic material.

Waste stream. Waste materials that have common physical form, contain similar hazardous constituents, and are generated from a single process or activity.

6.0 REFERENCES

(1) 1291-2013-011, Criticality Safety Evaluation for Increased Liquid Volume through Supercompactor

(2) 20.4.1.800 NMAC, Adoption of 40 CFR Part 268

(3) 40 CFR 268.2, Land Disposal Restrictions, Definitions Applicable in this Part

(4) 40 CFR 761, Polychlorinated Biphenyls (PCBs) Manufacturing, Processing, Subpart D Storage and Disposal

(5) ANSI-N43.3, General Radiation Safety Standard for Installations Using Non-Medical X-ray and Sealed Gamma Ray Sources, Energies up to 10 MeV

(6) AMWTP HWMA/RCRA Permit

(7) CCP-PO-003, CCP Transuranic Authorized Methods for Payload Control (CCP CH-TRAMPAC)

(8) DOE/NV-325, Nevada National Security Site Waste Acceptance Criteria

(9) Form-1268, Production Systems Access Request

(10) INST-OI-11, Waste Container Handling

(11) INST-OI-24, Packaging Newly Generated Radioactive Waste

(12) INST-OI-99, Real-Time Radiography Quick Scan—RTR 1001

(13) INST-OI-115, Real-Time Radiography Unit Operation (WMF-634)

(14) LST-LLW-04, Low-Level Waste and Mixed Low-Level Waste Prohibited and Restricted Items

(15) MP-COPS-9.17, Performing Pre-Job Briefings and Post-Job Reviews

(16) MP-DOCS-18.2, Records Management

(17) MP-Q&SI-5.4, Identification of Nonconforming Conditions

(18) MP-RTQP-14.4, Personnel Qualification and Certification

(19) MP-TRUW-8.1, Certification Plan for INL Transuranic Waste

(20) MP-TRUW-8.2, Quality Assurance Project Plan

(21) RPT-TRUW-05, Waste Matrix Code Reference Manual

7.0 RECORDS

Records generated by this procedure are classified in accordance with the table below and dispositioned in accordance with MP-DOCS-18.2, Records Management.

Record Description	Classification
INST-OI-12, Case File	Non-permanent WIPP/ENV1-J-1 / Destroy 75 years after submittal
Form-1374, RTR Log, or eSOMS equivalent (Applicable Operator Log)	Facility Operating Record/ENV2-a-1-a / Destroy 5 years after Life of Facility
Form-1578, Imaging Quality Indicator Verification Form for RTR	Facility Operating Record/ENV2-a-1-a / Destroy 5 years after Life of Facility
Recording Media	Non-permanent WIPP/ENV1-J-1 / Destroy 75 years after submittal

8.0 EXHIBITS

Exhibit 1 – RTR Image Test Quality Grid

Exhibit 2 – Waste Material Parameter Descriptions

Exhibit 3 – Parameters and Weights of Commonly Identified Items

Exhibit 4 – Fill Factor

Exhibit 5 – List of Prohibited Items

Exhibit 6 – Volume Conversions for Liquids in 55-Gallon Drums

Exhibit 7 – Volumes of Cylinders

Exhibit 8 – Common Liquid Measurements and Conversions

Exhibit 9 – V^2 Nominal Density Guidance Table

Exhibit 10 – Volume Conversion Table, Cubic Inches to Pints

Exhibit 11 – Volume Conversion for Partial 55-Gallon Drum (in pints)

Exhibit 12 – Categorizing Drum Contents during RTR Examination

Exhibit 1 – RTR Image Test Quality Grid

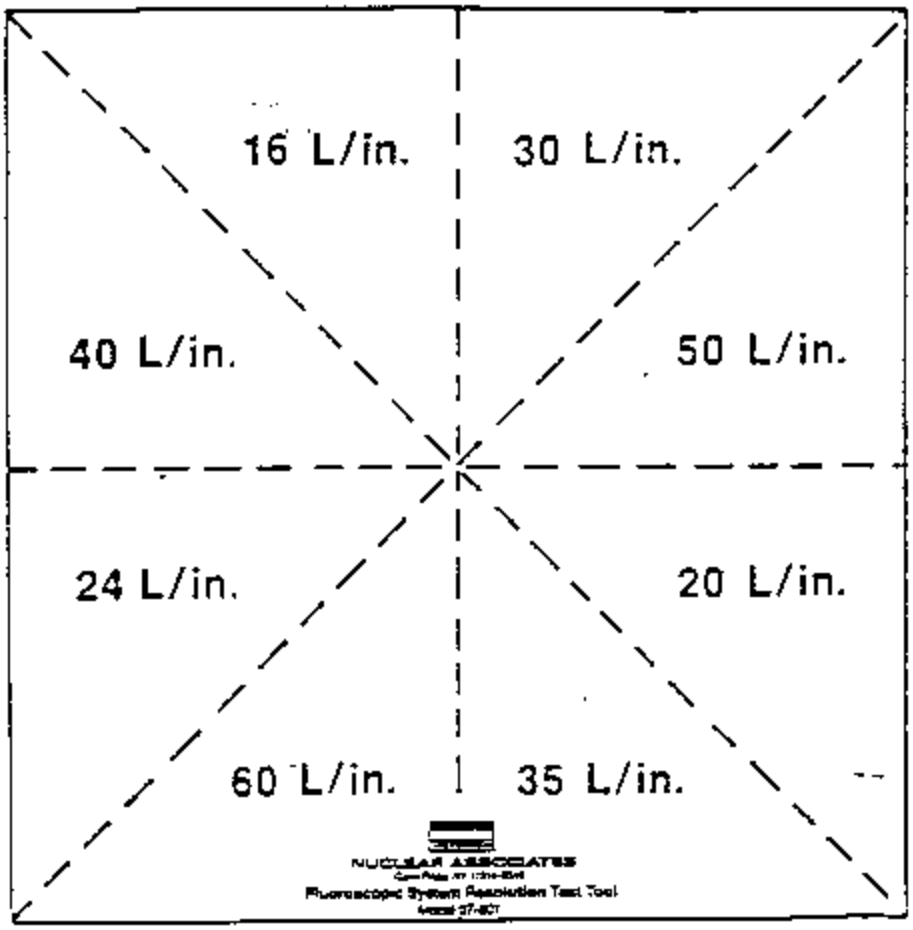

Exhibit 2 – Waste Material Parameter Descriptions

Waste Material Parameter	Help Description
Iron-based metals/alloys	Iron and steel alloys in the waste; does not include the waste container materials
Aluminum-based metals/alloys	Aluminum or aluminum-based alloys in the waste material
Other metals	All other metals found in the waste materials
Other inorganic materials	Nonmetallic inorganic waste, including concrete, glass, firebrick, ceramics, sand, and inorganic sorbents
Cellulosics	Materials generally derived from high polymer plant carbohydrates Examples are paper, cardboard, wood, cloth, etc.
Rubber	Natural or man-made elastic latex materials. Examples are surgeons' gloves, leaded rubber gloves, etc.
Plastics (waste materials)	Generally man-made materials often derived from petroleum feedstock. Examples are polyethylene, polyvinyl chloride, etc.
Organic matrix	Cemented organic resins, solidified organic liquids, and sludge
Inorganic matrix	Any homogeneous materials consisting of sludge or aqueous-based liquids that are solidified with cement, calcium silicate, or other solidification agents. Examples are wastewater treatment sludge, cemented aqueous liquids, inorganic particulate, etc.
Soil/gravel	Generally consists of naturally-occurring soil/gravel contaminated with inorganic waste materials
Steel (packaging materials)	208-L (55-gal.) drums
Plastics (packaging materials)	90-mil polyethylene drum line and plastic bags

Exhibit 3 – Parameters and Weights of Commonly Identified Items

Item	Weight	Waste Material Parameter
55-gal drum (17 C)	See WTS List of Container Weights	Steel (packaging materials)
90 mil liner (Type I, II, III, IV)	See WTS List of Liner Weights	Plastic (packaging materials)
O-ring plastic bag found in sludge, organic setups, etc.	4 lb	Plastic (packaging materials)
Drum plastic bag	1 lb	Plastic (packaging materials)
Plastic bag for waste	1/4 lb	Plastic (waste materials)
Cardboard liner (graphite mold waste)	4 lb	Cellulosics
Fiber pack	6 lb	Cellulosics
Box fiberboard liner	15 lb	Cellulosics
Box plastic liner	5 lb	Plastic (packaging materials)
Lead brick 2 by 4 by 8 in.	25 lb	Other metals
Leaded rubber glove	5.5 lb	Rubber
Leaded rubber apron	5.25 lb	Rubber
Liquids (water)	8 lb/gal+ (1 lb/pint)*	
Drum lead-liner: (1/8 in. thick, 28 in. high, by 72 in. long) (0.4 lb/in.^{3})	100 lb	Other metals
Drum lead-liner: (1/16 in. thick, 28 in. high by 72 in. long)	50 lb	Other metals
Vermiculite (95 gm/liter)	0.9 lb/gal (0.125 lb/pint)	Other inorganics
Oil-Dri (404 gm/liter)	3.36 lb/gal (0.42 lb/pint)	Other inorganics
Poly bottles (1 gal)	1 lb	Plastics (waste materials)
Metal can	1/2 lb	Iron-based metals/alloys
Drum stub bag	2 lb	Plastic Packaging (materials)
Cured cement	9 lb/gal (1.125 lb/pint)	Other Inorganic Materials
Uncured cement	24 lb/gal (3 lb/pint)	Other Inorganic Materials
Aquaset	9.6 lb/gal (1.21 lb/pint)	Other Inorganic Materials

* Waste parameter depends on source of liquid organic or inorganic.

Exhibit 4 – Fill Factor

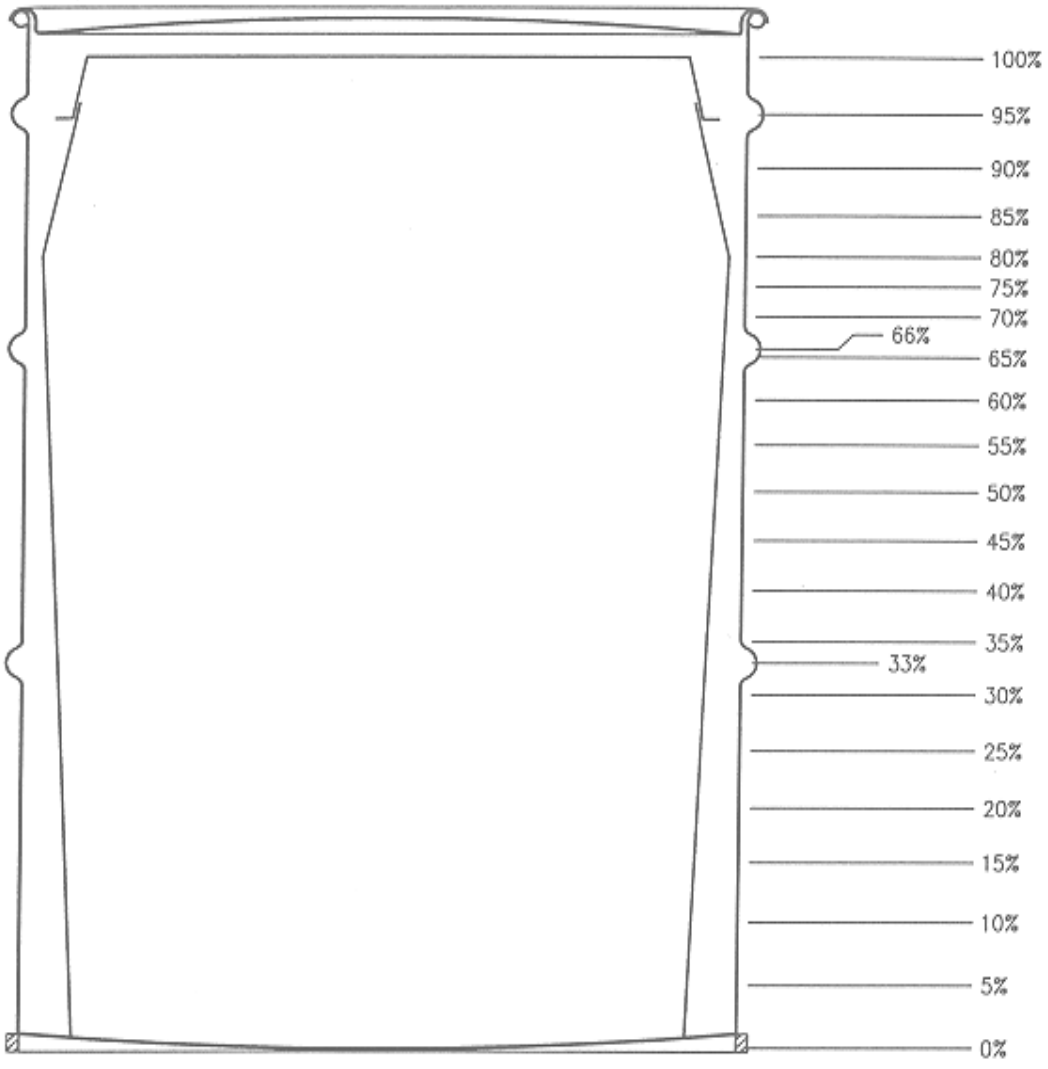

Fill factor of container is based on an estimate of the amount of waste present, "leveled out and uncompacted."

Exhibit 5 – List of Prohibited Items

Prohibited Item	Comments
Liquids	Liquid waste is not acceptable at WIPP. Liquid in quantities delineated below is acceptable. • Observable liquid containing PCBs are prohibited at WIPP. • Observable liquid shall be less than 1% by volume of the outermost container at the time of radiography or visual examination. • Internal containers with more than 60 mL or 3% by volume observable liquid, whichever is greater, are prohibited. • Containers with Hazardous Waste Number U-134 assigned shall have no observable liquid. • Overpacking the outermost container that was examined during radiography or visual examination or redistributing untreated liquid within the container shall not be used to meet the liquid volume limits. FOR FACILITY PROCESSING ONLY • Mixed waste container(s), with a total volume of observable liquid of less than 5% by volume of the waste container, can be designated for supercompaction through the facility.
Compressed gases	Typically, aerosol cans, gas bottles, or cylinders that cannot be verified to be physically vented (e.g., a drilled hole, a removed relief valve) with or without observable liquid is prohibited. FOR FACILITY PROCESSING ONLY • A waste container with any quantity of pressurized aerosol container(s) with a combined liquid volume of less than 49 mL is acceptable for processing through supercompaction.
Corrosives/reactives/ignitables present	Waste exhibiting the characteristic of ignitability, corrosivity, or reactivity.
Explosives	Examples include ammunition, dynamite, black powder, detonators, nitroglycerine, urea nitrate, and picric acid.
Wastes with PCBs not authorized under an EPA PCB waste disposal authorization	Light ballasts and transformers are potential sources of PCBs in much of the waste. PCB items commingled (in direct contact with or displaying evidence of cross-contamination) with observable liquid is prohibited.
Non-radionuclide pyrophorics	Example of pyrophoric radionuclides are: metallic plutonium, americium. Examples of non-radionuclide pyrophorics or materials/waste that may cause a pyrophoric type event are: organic peroxides, sodium metal, and chlorates.
Sealed containers greater than 4 liters	Containers >4 liters are considered sealed unless the container cannot be airtight (example: fiber-packs).
Non-mixed hazardous waste	Hazardous wastes not occurring as co-contaminants with transuranic mixed wastes (non-mixed hazardous wastes).

Prohibited Item	Comments
Waste incompatible with backfill, seal and panel closure material, shipping container materials or other wastes	Excessive rust, brittle materials, excessive corrosion, evidence of reaction in the waste are all potential sources for evidence that the waste is not compatible with backfill, packaging, or shipping container.
Sharp or heavy items not blocked or braced	Sharp items that have a reasonable potential to puncture the payload container shall be treated or protected prior to shipment. (The presence of a properly assembled rigid or fiberboard liner is considered as one method of providing protection. Padding, when applicable, is also an acceptable method of providing protection.) Heavy items shall be blocked, braced, or suitably packaged to provide puncture protection for the payload containers packaging these objects.

(HWMA/RCRA Permit; MP-TRUW-8.1; MP-TRUW-8.2; CCP-PO-003)

Exhibit 6 – Volume Conversions for Liquids in 55-Gallon Drums

Volume Conversions for Liquid			
Inches	Gallons	Pints	Pounds
1.0	1.5	12	12
1.5	2.25	18	18
2.0	3.0	24	24
2.5	3.75	30	30
3.0	4.50	36	36
3.5	5.25	42	42
4.0	6.0	48	48
4.5	6.75	54	54
5.0	7.5	60	60
5.5	8.25	66	66
6.0	9.0	72	72
6.5	9.75	78	78
7.0	10.5	84	84
7.5	11.25	90	90
8.0	12.0	96	96
8.5	12.75	102	102
9.0	13.5	108	108
9.5	14.25	114	114
10.0	15.0	120	120

Exhibit 7 – Volumes of Cylinders

Volumes of Cylinders (pints)												
	Diameter (in.)											
Height (in.)	1	2	3	4	5	6	7	8	9	10	11	12
1	0.03	0.11	0.24	0.44	0.68	0.98	1.33	1.74	2.20	2.72	3.29	3.92
2	0.05	0.22	0.49	0.87	1.36	1.96	2.67	3.48	4.41	5.44	6.58	7.83
3	0.08	0.33	0.73	1.31	2.04	2.94	4.00	5.22	6.61	8.16	9.87	11.75
4	0.11	0.44	0.98	1.74	2.72	3.92	5.33	6.96	8.81	10.88	13.16	15.67
5	0.14	0.54	1.22	2.18	3.40	4.90	6.66	8.70	11.02	13.60	16.46	19.58
6	0.16	0.65	1.47	2.61	4.08	5.88	8.00	10.44	13.22	16.32	19.75	23.50
7	0.19	0.76	1.71	3.05	4.76	6.85	9.33	12.19	15.42	19.04	23.04	27.42
8	0.22	0.87	1.96	3.48	5.44	7.83	10.66	13.93	17.63	21.76	26.33	31.33
9	0.24	0.98	2.20	3.29	6.12	8.81	12.00	15.67	19.83	24.48	29.62	35.25
10	0.27	1.09	2.45	4.35	6.80	9.793	13.33	17.41	22.03	27.20	32.91	39.17
11	0.30	1.20	2.69	4.79	7.48	10.77	14.66	19.15	24.24	29.92	36.20	43.08
12	0.33	1.31	2.94	5.22	8.16	11.75	15.99	20.89	26.44	32.64	39.49	47.00
13	0.35	1.41	3.18	5.66	8.84	12.73	17.33	22.63	28.64	35.36	42.79	50.92
14	0.38	1.52	3.43	6.09	9.52	13.71	18.66	24.37	30.84	38.08	46.08	54.84
15	0.41	1.63	3.67	6.53	10.20	14.69	19.99	26.11	33.05	40.80	49.37	58.75

Exhibit 8 – Common Liquid Measurements and Conversions

Liquid Measurements	
1.	3 tsp = 1 tbsp
2.	4 tbsp = 1/4 cup
3.	2 cups = 1 pint
4.	4 cups = 1 qt
5.	2 pints = 1 qt
6.	8 pints = 1 gal
7.	4 quarts = 1 gal
8.	Pints × 0.473 = liters
9.	Millilitres × 1,000 = liters
10.	49 mL = 0.104 pints
11.	60 mL = 0.127 pints
12.	1 pint = 1 lb

Conversions		
Unit	Conversions to Pints	Weight (lb)
1 teaspoon	0.01	0.01
1 tablespoon	0.03	0.03
1/4 cup	0.13	0.13
1/3 cup	0.17	0.17
1 cup	0.5	0.5
1 pint	1	1
1 quart	2	2
1 gal	8	8

Exhibit 9 – V^2 Nominal Density Guidance Table

Material	Density (kg/L)	References
Aluminum	3.0	1, 2
Cement	2.0	1
Cardboard (fiber board)	0.8	5
Copper	9.0	1, 2
Fiber board (insulating)	0.8	4
Fire Brick (90% aluminum oxide)	3.0	4
Glass	2.0	3
Glass, Bulk Density	2.0	3
Glass, Raschig Rings (0.06 kg/ring)	0.6	4
Graphite, Bulk Density	0.5	3
Gravel	2.0	3
Iron	7.5	2
Lead	11.0	1, 2
Plastic (e.g., 10 mL liner material)	0.9–1.0	Calculated
Plastic (e.g., 90 mL heavy rigid liner material)	0.9–1.0	Calculated
Rubber	0.9–2.0	2
Sand	2.0	3
Sludge	1.0–1.5	Common Knowledge
Soil	1.0–1.8	2
Stainless Steel	8.0	1
Steel	8.0	1, 2
Tantalum	17.0	2
Wood (fir, oak, pine, avg.)	1.0	3
Water	1.0	1, 3

The actual density of specific metals or wood types may vary due to the type of wood or the composition of the metal alloy.
Water has a nominal density of 1 kg/L
1 kilogram = 2.2 pounds

References

1. Shigley, J. E., Mechanical Engineering Design, 3rd ed. 636
2. Marks Standard Handbook for Mechanical Engineers, 8th ed. 6-60/61
3. Perry, John H., Chemical Engineers Handbook, 3rd ed. 1549-52
4. Harbison-Walker Refractories Co., Technical Bulletin 12, HU
5. Rocky Flats procedure, 4-I19-NDT-00569

Exhibit 10 – Volume Conversion Table, Cubic Inches to Pints

in^3	1	2	3	4	5	6	7	8	9	10	11	12	13	14	15	16	17	18	19	20	21	22
1	.04	.07	.10	.14	.17	.21	.24	.28	.31	.35	.38	.42	.45	.49	.52	.55	.59	.62	.66	.69	.73	.76
2	.07	.14	.21	.28	.35	.42	.49	.55	.62	.69	.76	.83	.9	.97	1.04	1.12	1.18	1.25	1.32	1.41.395	1.45	1.52
3	.1	.17	.31	.42	.52	.62	73	.83	.94	1.04	1.14	1.25	1.35	1.45	1.56	1.66	1.77	1.87	1.97	2.08	2.18	2.29
4	.14	.28	.42	.55	.69	.83	.97	1.12	1.25	1.39	1.52	1.66	1.8	1.94	2.08	2.22	2.36	2.49	2.63	2.77	2.91	3.05
5	.17	.35	.52	.69	.87	1.04	1.21	1.39	1.56	1.73	1.9	2.08	2.25	2.42	2.6	2.77	2.94	3.12	3.29	3.46	3.64	3.81
6	.21	.42	.62	.83	1.04	1.25	1.45	1.66	1.87	2.08	2.29	2.49	2.7	2.9	3.12	3.32	3.53	3.74	3.95	4.16	4.36	4.57
7	.24	.49	.73	.97	1.21	1.45	1.7	1.94	2.19	2.42	2.67	2.91	3.15	3.39	3.64	3.88	4.12	4.36	4.61	4.85	5.09	5.33
8	.28	.55	.83	1.11	1.39	1.66	1.94	2.22	2.49	2.77	3.05	3.32	3.61	3.88	4.16	4.43	4.71	4.99	5.26	5.54	5.82	6.1
9	.31	.62	.94	1.25	1.56	1.87	2.18	2.49	2.81	3.12	3.43	3.74	4.05	4.36	4.68	4.99	5.3	5.61	5.92	6.23	6.66	6.86
10	.35	.69	1.04	1.39	1.73	2.08	2.42	2.77	3.12	3.46	3.81	4.16	4.5	4.85	5.19	5.54	5.89	6.23	6.58	6.92	7.27	7.62
11	.38	.76	1.14	1.52	1.9	2.29	2.67	3.05	3.43	3.81	4.19	4.57	4.95	5.33	5.71	6.1	6.48	6.86	7.24	7.62	8	8.38
12	.42	.83	1.25	1.66	2.08	2.49	2.91	3.32	3.74	4.16	4.57	4.99	5.4	5.82	6.23	6.65	7.06	7.48	7.98	8.31	8.73	9.14
13	.45	.9	1.35	1.8	2.25	2.7	3.15	3.61	4.05	4.5	4.95	5.4	5.85	6.3	6.75	7.2	7.65	8.1	8.55	9	9.45	9.9
14	.49	.97	1.45	1.94	2.42	2.9	3.39	3.88	4.36	4.85	5.33	5.82	6.3	6.79	7.27	7.76	8.24	8.72	9.21	9.7	10.18	10.67
15	.52	1.04	1.56	2.08	2.6	3.12	3.64	4.16	4.68	5.19	5.71	6.23	6.75	7.27	7.79	8.31	8.83	9.35	9.87	10.39	10.91	11.43
16	.55	1.12	1.66	2.22	2.77	3.32	3.88	4.43	4.99	5.54	6.1	6.65	7.2	7.76	8.31	8.87	9.42	9.97	10.53	11.08	11.64	12.19
17	.59	1.18	1.77	2.36	2.94	3.53	4.12	4.71	5.3	5.89	6.48	7.06	7.65	8.24	8.83	9.42	10	10.6	11.18	11.77	12.36	12.95
18	.62	1.25	1.87	2.49	3.12	3.74	4.36	4.99	5.61	6.23	6.86	7.48	8.1	8.72	9.35	9.97	10.6	11.22	11.84	12.47	13.09	13.71
19	.66	1.32	1.97	2.63	3.29	3.95	4.61	5.26	5.92	6.58	7.24	7.9	8.55	9.21	9.87	10.53	11.18	11.84	12.5	13.16	13.82	14.48
20	.69	1.39	2.08	2.77	3.46	4.16	4.85	5.54	6.23	6.92	7.62	8.31	9	9.7	10.39	11.08	11.77	12.47	13.16	13.85	14.55	15.24
21	.73	1.45	2.18	2.91	3.64	4.36	5.09	5.82	6.55	7.27	8	8.73	9.45	10.18	10.91	11.64	12.36	13.09	13.82	14.55	15.27	16
22	.76	1.52	2.29	3.05	3.81	4.57	5.33	6.1	6.86	7.62	8.38	9.14	9.9	10.67	11.43	12.19	12.95	13.71	14.48	15.24	16	16.76

Multiply the cross-section volume in the table by the height of the object to get the volume of the object in pints. The cross-section volume is based on a height of 1 inch.

Exhibit 11 – Volume Conversion for Partial 55-Gallon Drum (in pints)

Volume	1/8	1/4	1/3	1/2	2/3	3/4
1st chime	18	36	48	73	97	109
2nd chime	37	74	97	147	198	221
Full drum	55	110	145	220	295	330

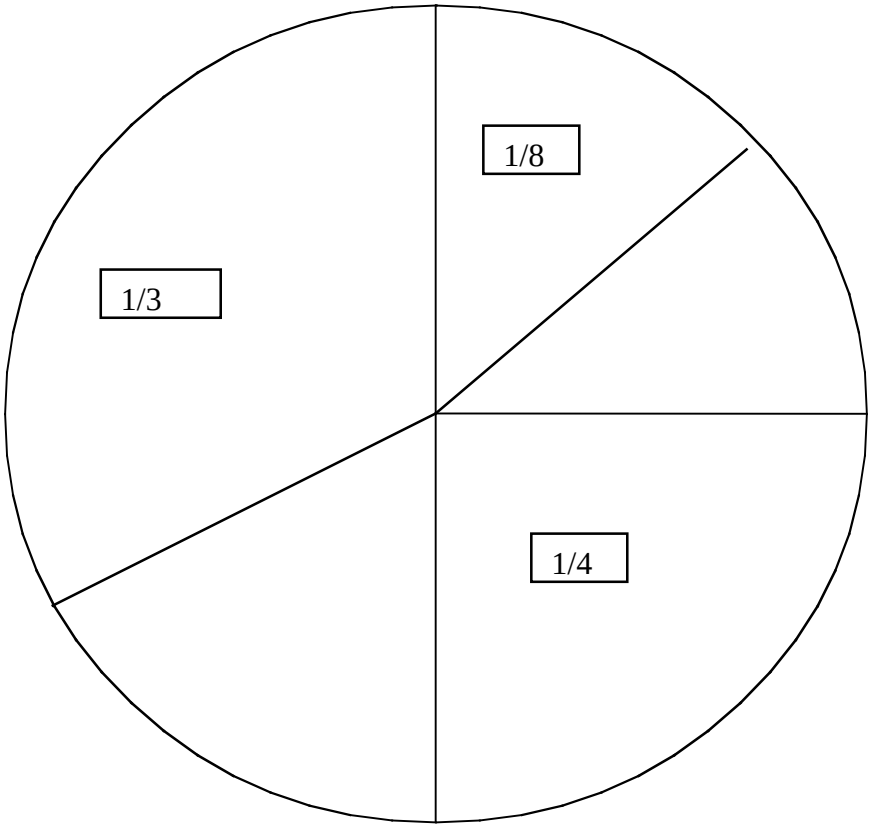

Exhibit 12 – Categorizing Drum Contents during RTR Examination

CATEGORY	Packaging Material	Layer of Confinement	Waste Material						
ITEM									
Plastic Drum Bag	*	X							
90-mil Liner	X								
Small Plastic Bag Containing Waste	*	X							
Poly Bottle <4 liters			X						
Fibre Pak			X						
Volrath Can <4 liters			X						
Metal Can <4 liters			X						
Empty Plastic Bag			X						
Ice Cream Carton			X						
Sealed Containers >4 liters		X							

* Only plastic bags (PVC or poly) in the outer two layers are considered plastic packaging materials, the others are considered plastic waste.

9.0 APPENDICES

Appendix A – Burning DVD from Hard Drive

Appendix B – Creating or Transferring Data to the RITA Archival System

Appendix C – Revision Log

Appendix A – Burning DVD from Hard Drive

NOTE: *This appendix is used to provide information for burning data from the hard drive onto a DVD.*

1. Start by clicking the "Nero Essentials" icon on the desktop.

2. Highlight the data DVD button by double clicking it. (This program will burn the DVD from the hard drive.)

   NOTE: *The Nero essentials will open and have a button on the right hand side of the window titled ADD.*

3. After selecting the ADD button, a folder window will open with the recorded data.

4. Find the applicable file or folder.

5. Highlight the drum(s) and IQI, if needed, to be burned to the DVD **AND** click the ADD button.

6. Ensure there is enough memory on the DVD for selected file. If not, insert a new DVD.

7. After all items to be burned to DVD have been added, close the folder containing all the data.

8. Hit the NEXT button.

9. Name the disc with the batch number being burned to the DVD, if necessary.

10. Ensure that "Verify data on disc after burning" and "Multi-session" boxes are checked.

11. Select the BURN button. If DVD does not have enough space for selected file, then insert new DVD and continue.

12. After the burn is complete, select OK to "Data Verification Completed Successfully."

13. Select NEXT.

14. Exit "Nero Essentials."

15. Re-insert disc.

16. Select previously burned file
    AND check the audio/video record for completeness.

17. Exit folder.

18. Create a folder with the batch number as the folder name, if necessary.

19. Move previously burned file(s) to batch folder.

Appendix B –
Creating or Transferring Data to the RITA Archival System

1 Double click RITA icon, if necessary.

2 If needing to create a disk, click CREATE.

2.1 Select the type of disk to be created and select CREATE.

NOTE 1: *After confirming, a window will pop up informing if you are successful or if there is a problem with the creation of the disc.*

NOTE 2: *After clicking CANCEL, the program will return you to the first screen of RITA.*

2.2 If information is correct, click CONFIRM.

2.3 If information is incorrect, click CANCEL.

2.4 Click OK to acknowledge creation of the disk ID.

3 If needing to transfer data, click TRANSFER.

NOTE: *While data is transferring, the RITA window can be minimized.*

3.1 Select disk ID to be transferred and select TRANSFER.

3.2 Input batch ID if disk is associated with a batch, and N/A if it is not.

3.3 Click TRANSFER.

3.4 If transfer is unsatisfactory, contact SS/subject matter expert/SE.

3.5 If transfer is complete and satisfactory, click OK.

Appendix C – Revision Log

Revision Number	Date Approved	Pages Affected	Description of Revision
0	08/01/02	All	Initial issue. DCR-1254 – Issued for formal validation during commissioning activities.
1	09/06/02	All	DCR-1469-Editorial changes throughout document, added new step 4.5.9 to avoid overselect situation, added steps to Section 4.9, Deleted Step 4.7.3.3.11
2	10/22/02	Page 12, 55, 57 and 58	DCR-1655. Updated Section 4.2.2, Changed reference from OI-09 to OI-11, Made Steps 4.10.2.10.2 through10.10.2.10.11 substeps of 4.10.2.10.1
3	10/31/02	Pages 19, 26, 27, & 29	DCR-1684. Updated Sections 4.7.1 and 4.7.3 to clarify warm-up requirements.
4	12/11/02	Pages 15-18 & 57-58	DCR-1800, New Step 4.5.4, Changed steps to eliminate excessive exiting and entering of the control room and to provide more accurate instruction.
5	01/09/03	Various	DCR-1874. Changed to reflect software changes.
6	01/28/03	27	DCR-2014, Minor Change to replace Steps 4.7.3.2.9 and 4.7.3.2.10, which were erroneously removed from Revision 5.
7	02/14/03	Various	DCR-2057, updated to address key control, provide a hand-off for manual batching, provide clarification, and address sequencing changes.
8	3/20/03	Pg 19	DCR-2131, Minor Change - Removed Note at beginning of Section 4.7 which allowed steps to be performed out of sequence.
9	03/27/03	All	DCR-2126, Minor change to amend date form DOE Approves Retrieval Operations Start-up to 03/28/03 and Editorial update to Records Section.
10	05/02/03	Various	DCR-2235, Incorporate WIPP review comments.
11	05/08/03	Various	DCR-2254, Added Form number and title that was inadvertently omitted.
12	06/27/03	Various	DCR-2267, Revised to include waste items in the comment area and a verification of the task plan disposition.
13	7/28/03	Pg A2	DCR 2375 – Minor Change, Correct conversion for Oil-Dry.

Revision Number	Date Approved	Pages Affected	Description of Revision
14	7/31/03	Pg 24, 33, 51	DCR-2386 – Minor Change, Clarification of step and update location for recording Independent Observation.
15	9/25/03	Various	DCR-2439 – Revised to include additional manual batch data report details for CAR 03-072, WIPP audit A-03-05 recommendations 28 (IDC and prohibited item confirmation at the end of the scan) and 29 (recording the image system check), delete references to EDF-199 and replaced with 5232-RPT-TRUW-05, AMWTP Waste Matrix Code Reference Manual. Revised minor operational requirements.
16	01/13/04	Various	DCR-2542. Added clarification of TRU and ITR requirements and corrected caution statements. Incorporated operational changes.
17	02/19/04	Pg 39	DCR-2716. Step below Item E was revised.
18	07/15/04	Various	DCR-2787. The changes are being made to clarify the intent/use of the IQI test pattern, improve the sequencing of steps, and clarify instructions. Form-1578, Imaging Quality Indicator Verification Form For RTR, was created and references added to procedure. Added new Section 4.11, Initiating RTR Nonconformance Report. Added new Steps 4.2.6 and 4.7.3.8.34 to meet part of the WIPP-WAP-B1-3b(2) requirement.
19	1/12/05	Revised entire document.	DCR-3277. Deleted Steps 4.2.6, 4.7.3.3.8.34, 4.7.3.11 and Section 4.10. Incorporated Field Change DCR-3286. Editorial changes (moved non-action/information only statements in steps to notes, moved action statements from notes to steps, and broke up steps that had more than one action, capitalized exact titles on operating buttons, added a reference to reference section of report called out in procedure appendix) made to reflect requirements of MP-DOCS-18.1, Developing Written Work Instructions. Per CBFO's direction, changes were made throughout this procedure to ensure it is consistent with the approved changes made to INST-FOI-17. Made additional changes per VEE and CBFO's direction.
20	01/20/05	Pages 22 and 39	DCR-4108. Corrected E-Stop button callout in both steps. Minor change.

Revision Number	Date Approved	Pages Affected	Description of Revision
21	02/07/05	Various	DCR-4124. In Steps 4.8.18 and 4.8.19, wording was changed from "Console to key" to "E-Stop Reset key." Steps 4.8.10.1 and 4.10.47 were changed for process accuracy. Changed Steps 4.10.48 and 4.10.49.
22	03/08/05	Various	DCR-4195. Made itemized changes to procedure. Corrective action from CBFO Audit A-05-08, CAR 05-013 (AMWTP CAR 12800).
23	08/17/05	Various	DCR-4378. Incorporated Field Change, DCR 4346. Revised to reflect upgrade from Pantak X-ray equipment to GE X-ray equipment.
24	01/17/06	Section 4.10	DCR-4638. Add new step for PCB labeling requirement. Revise current Exhibit 6, change PCB definition, and correct Exhibit numbers. Incorporate FC-1, DCR-4638-1. Add steps concerning candidate drum link. Incorporate FC-2, DCR-4747.
25	2/13/06	Exhibit 12 and 4.7.42	DCR-4757. Add Exhibit 12, Categorizing Drum Contents During RTR Examination.
26	04/27/06	Page 27	DCR-4977. Revised Step 4.7.18 for clarification.
27	5/24/06	Various	DCR-5002. Change to support SCR-2320.
28	06/19/06	Various	DCR-5074. Incorporate changes consistent with annual DSA update implementation (new prerequisite after Step 3.2.2).
28 FC-1	7/5/06	Various	DCR-5127. Clarifying x-ray warm-up steps
29	9/21/06	Various	DCR-5335. Incorporate FC-1 and incorporate changes to satisfy CAR-23463 (CB+FO CAR 06-36)
29 FC-1	10/19/06	Page 56	DCR-5495. Updated Exhibit 5, List of Prohibited Items.
29 FC-2	10/24/06	Page 56	DCR-5503. Superseded Rev 29, FC-1, DCR-5495. Changed Exhibit 5, List of Prohibited Items, Compressed Gases.
29 FC-3	11/21/06	Page 20	DCR-5564. Placed Step 4.5.26 before Step 4.5.25.
30	12/04/06	Various	DCR-5523. Incorporated DCR-5503 and DCR-5564 permanent field changes. Deleted steps no longer required because of software update. Added information for job debriefings and for Nevada National Security Site (NNSS) requirements. Made changes identified during limited field use validation.

Revision Number	Date Approved	Pages Affected	Description of Revision
31	12/06/06	Page V	DCR-5601. Deleted incorrect sentence from description in Revision Log, Revision Number 30. Incorrect reference made due to error on DCR processed for Rev. 30.
31FC-1	12/18/06	24, 34	DCR-5632. Added wording to allow for proper references when running ARP and other waste streams.
31 FC-2	3/19/07	7, 39	DCR-5834. Added wording for clarification.
31 FC-3	06/05/07	21, 25, 24	DCR-6025. Clarified step and provided flexibility for use of procedure.
31 FC-4	06/07/07	Title page	DCR-5702. Deleted "(Controlled Activity)" and added "(General Use)."
32	07/17/07	Page 24, 34 and 35	DCR-6209. Incorporated DCR-5632 (FC-1), DCR-5834 (FC-2), DCR-6025 (FC-3), and DCR-5702 (FC-4) changes. SCR-2363 eliminates the need for an NCR at certain points in Sections 4.7.40 and 4.7.41.
32 FC-1	11/30/07	Pages 30 & 58	DCR-6630. For WAPP clarification.
33	12/19/07	Various	DCR-6482. Periodic Review. Add notes and steps to clarify containers and prohibited items. Update Roles and Responsibilities, References and Records sections. Edit notes, steps, warnings and cautions per MP-DOCS-18.1. Incorporate DCR-6630.
33 FC-1	12/21/07	Page17	DCR-6682. Added "or comments field" to Step 4.5.6.2.1.1.
33 FC-2	01/24/08	Page 29	DCR-6737. Change to step 4.2.27 for residual liquid in S3000.
33 FC-3	02/01/08	Pages 3 and 17	DCR-6740. Steps 3.1.13 and 4.4.1.2. Changes to clarify preheat requirements for drums located in WMF-634,
34	02/25/08	Various	DCR-6767. Incorporated changes per DCR-6737 (FC-1), -6682 (FC-2), and -6740 (FC-3).
34 FC-1	3/15/08	Various	DCR-6930. Added steps for clarification to ensure prerequisites are complete.
34 FC-2	03/24/08	Various	DCR-6952. Delete 34 FC-1 and add steps to correct problems with flow.
35	04/03/08	Various	DCR-6866. Incorporated changes in support of transportation transition to CCP.

Revision Number	Date Approved	Pages Affected	Description of Revision
36	06/19/08	Various	DCR-7191. Updated procedure due to RTR computer system upgrade.
36 FC-1	07/04/08	Pages 13, 36	DCR-7316. Deleted words and steps no longer required due to new system configuration.
37	07/30/08	Various	DCR-7308. Incorporated FC-1 (DCR-7316). Added steps/revised steps for consistency to upgrades to system. Revised Appendix A to add clarification. Updated TSR rolldown references; editorial/formatting changes per MP-DOCS-18.1, MP-DOCS-18.4. Incorporated Blue Sheet changes per DCR-6811 for Ops restructuring.
38	07/31/08	Appendix A Step 4	DCR-7414. Correct typographical error in Step 4 of Appendix A. “File” should be “Find”.
39	12/01/08	Various	DCR-7586. Added note, revised Exhibit 5 regarding residual liquids with U134 present, and edited per MP-DOCS-18.1.
40	01/28/09	Various	DCR-7902. DSA changes incorporated.
40 FC-1	03/19/09	Pg 7 & 40	DCR-8177. Clarification and match software terminology.
41	08/22/09	Various	DCR-8555. Incorporate permanent field change (DCR-8177), and added DOCS-BLUESHEET-02 changes.
42	11/18/09	Various	DCR-8725. Incorporated 2009 DSA/TSR update. Added Appendix B.
43	02/22/10	Various	DCR-9006. Changes to ensure IQI has been completed and is compliant, to ensure 55-gal drums overpacked into larger containers have an RTR scan, and editing per MP-DOCS-18.1 and editorial consistency.
43 FC-1	04/21/10	B1	DCR-9193. Change kV ratings of RTR-101
43 FC-2	04/28/10	B1	DCR-9205. Change kV ratings for RTR-106
43-FC-3	05/10/10	Pg 4	DCR-9209. Added Step 3.1.22 to resolve CAR 49662, incorporating alternative isolation device information to procedure.
43-FC-4	06/19/10	Pgs 13, 14 and B1	DCR-9375. Changed warm-up steps and RTR kV values RTR-106.
44	06/24/10	Various	DCR-9136. Incorporated DCRs-9193, -9205, -9209 and -9375 EXCEPT did not incorporate changes to the RTR kV values; also incorporated WIPP Permit modifications.

Revision Number	Date Approved	Pages Affected	Description of Revision
44 FC-1	08/02/10	12, 13, 14, B1	DCR-9451. Revise steps 4.3.1.3.2, 4.3.1.4.2, 4.3.1.5.2, 4.3.1.6.2 and Appendix B to be able to down-rate RTR.
44 FC-2	09/13/10	Pages 7-9	DCR-9517. Allow Operator to complete Section 4.1 regardless if the equipment is on or off when the operator uses this procedure.
44 FC-3	09/15/10	Pgs 11, 43	DCR-9534. Gives formalized direction, redirects an oncoming operator to the proper step.
44 FC-4	09/16/10	Pgs 9, 11	DCR-9543. Provides formal direction for operators.
44 FC-5	09/17/10	Various	DCR-9549. Provide guidance if steps already completed. Re-sequenced if steps already completed. Re-sequenced drum loading steps for safer operation.
45	09/21/10	Various	DCR-9494. Incorporated FCs 1 through 5 (DCRs-9451; 9517; 9534; 9543; 9549) as permanent.
45 FC-1	09/23/10	Various	DCR-9560. Incorporated changes to allow operators to restore programs required to perform an audio/video recording; delete appendix B, add reference to “or eSOMS equivalent” when referencing Form-1374; update kV values where appropriate.
46	12/17/10	Various	DCR-9676. Incorporate Revision 45 FC-1 (DCR-9560) and the WIPP Permit Renewal.
47	06/21/11	Various	DCR-10137. Changed to Controlled Activity. Updated steps and notes to match operational changes. Added clarification to reduce duplicate NCRs and to minimize rework. Resolves CAR 54805.
47 FC-1	01/09/12	Pg. 33	DCR-10727. Provide direction for scanning LLW/MLLW through RTR.
47 FC-2	01/12/12	Pg. 33	DCR-10738. FC-1 not required (deleted)
47 FC-3	03/05/12	A2 of A2	DCR-10990. Delete reference to “my disc” file.
48	07/03/12	Various	DCR-10810. Incorporated DCR-10990, and ITG-BLUESHEET-019 to provide cross-walk of titles from BBWI to ITG. Changes made for clarification regarding Form-1218, to clarify the requirements for prohibited liquids, and for an alternate means of LO/TO for energy isolation.
48 FC-1	07/10/12	Pg. 15	DCR-11441. Provided allowance for RITA not available.
49	08/08/12	Various	DCR-11428. Implemented DSA changes and 48 FC-1 (DCR-11441).

AMWTP OPERATING INSTRUCTIONS		
INST-OI-12, Rev. 55	Issued: 08/27/14	Effective: 08/27/14 @ 0700 hr

Real-Time Radiography Examinations (Certification Scans)

Revision Number	Date Approved	Pages Affected	Description of Revision
50	02/28/13	Various	DCR 11904. Change to remove RTR unit operation instructions, make procedure applicable to drum and box certification examinations.
51	04/09/13	Pg 16 & 39	DCR-12175. Made changes to implement new PMR requirement.
52	08/01/13	Steps 3.1.2, 4.3.6, 4.4.1.1, Note 2, Step 4.6.9	DCR-12586. Updated to reflect new building, new equipment.
53	02/26/14	New Step 4.4.1.3	DCR-12826. Step added for clarification for when WTS is not available.
54	06/17/14	Various	DCR-13224. Added substeps for performing replicate scans and independent observations.
55	08/25/14	Various	DCR-13556. Incorporated changes to process for preheat – no longer driven by specific days; added step and appendix to perform/support system calibration. Associated with SCR/SDCR-4569.

Non-Facility Visual Examination Operations

(Controlled Activity)

Advanced Mixed Waste Treatment Project

Approved:

(Signature on file. See DCR-12700.) 09/03/13

Chuck Stepzinski
Characterization & Storage Manager

Date

(Verification of Effective Revision): (After verifying current revision, replace cover page on working copy if more space is needed.)

Initials	Date	Initials	Date	Initials	Date	Initials	Date

AMWTP INSTRUCTION		
INST-OI-34, Rev. 28	Issued: 09/03/13	Effective: 09/04/13
Non-Facility Visual Examination Operations		

CONTENTS

1.0 PURPOSE/SCOPE 1

2.0 ROLES AND RESPONSIBILITIES 2

3.0 PRECAUTIONS AND LIMITATIONS/PREREQUISITES 2

3.1 Precautions and Limitations....2

3.2 Prerequisites....5

4.0 INSTRUCTIONS....6

4.1 General Instructions....6

4.2 Visual Examination Instruction 9

4.3 Visual Examination of Legacy Waste Containers 37

4.4 Visual Examination of Newly Generated Waste Packages 45

4.5 Visual Examination of Newly Generated Waste Closure....51

4.6 RTR/VE Update (Supplemental Analysis to RTR or VE Batch) 55

4.7 Post Job Review....66

5.0 DEFINITIONS....66

6.0 REFERENCES 69

7.0 RECORDS 70

8.0 EXHIBITS 70

Exhibit 1. Waste Material Parameter Descriptions....72

Exhibit 2. Parameters and Weights of Commonly Identified Items 73

Exhibit 3. Fill Factor....74

Exhibit 4. List of TRU Prohibited Items....75

Exhibit 5. Volume Conversions for Liquids in 55-gallon Drums....76

Exhibit 6. Volumes of Cylinders 77

Exhibit 7. Common Liquid Measurements and Conversions 78

Exhibit 8. V2 Nominal Density Guidance Table 79

Exhibit 9. Volume Conversion Table, Cubic Inches to Pints 80

Exhibit 10. Volume Conversion for Partial 55-gallon Drum (in pints) 81

Exhibit 11. Visual Examination Equipment IDs.....82

Exhibit 12. Description of Liners.....84

Exhibit 13. Schematic of Criticality Control for Secondary Waste.....85

Exhibit 14. Waste Incompatibility by IDC 86

9.0 APPENDICES 89

Appendix A – List of LLW/MLLW Prohibited Items and Restricted Items.....A1

Appendix B – Revision Log B1

AMWTP INSTRUCTION		
INST-OI-34, Rev. 28	Issued: 09/03/13	Effective: 09/04/13

Non-Facility Visual Examination Operations

1.0 PURPOSE/SCOPE

The purpose of this instruction is to provide directions for performing *visual examination* (VE; see def.) in accordance with the Waste Isolation Pilot Plant (WIPP), Waste Analysis Plan (WAP), applicable Resource Conservation and Recovery Act (RCRA) requirements, WIPP Contact-Handled Waste Acceptance Criteria (CH-WAC), and Contact-Handled TRUPACT-II Authorized Methods for Payload Control (CH-TRAMPAC).

The purpose of visual examination is to verify the physical form of the waste, prevent the shipment of prohibited items to WIPP, confirm that the waste matches the *waste matrix code* (WMC; see def.) assigned to a waste container, and confirm that the waste matches the *waste stream* (see def.) description. Visual examination is also used to characterize waste as it is packaged at the Advanced Mixed Waste Treatment Project (AMWTP).

This instruction is written to use in conjunction with other work control documents. Specifically, this instruction must be performed in conjunction with the appropriate building/equipment-specific procedure; INST-OI-16, Drum Coring Operations; INST-OI-73, Manual Drum Coring Operations; or INST-OI-75, Container-in-Container Sampling; for task performance in WMF-634; or INST-OI-68, Drum Treatment Facility Operations, for task performance in WMF-628.

This instruction applies to all personnel performing required VEs and as required by any approved methods of work (AMOW) or permits to work (PTW) used in conjunction with this instruction.

2.0 ROLES AND RESPONSIBILITIES

Performer	Responsibilities
Operations Technician (OT)	• Performs tasks in support of the VE • Performs tasks associated with glovebox operations, waste packaging, and container/waste handling and movement • Performs limited radiological surveys.
Shift Supervisor (SS)	• Ensures that individual training and qualification is current for the individual performing VE in accordance with QP-VE-0001, Visual Examiner.
Visual Examination Expert (VEE)	• Supports VE as appropriate and maintains responsibility for the overall direction and implementation of the VE at the facility.
Visual Examination Operator (VEO)	• Unless otherwise specified, performs characterization examinations in accordance with this instruction • If properly trained or qualified, may perform steps in this instruction normally performed by an OT.

3.0 PRECAUTIONS AND LIMITATIONS/PREREQUISITES

3.1 Precautions and Limitations

3.1.1 Only Aquaset-II G, Micro-Cel E, Hg Absorb (Hg Absorb for treatment of elemental mercury only), or the original absorbent already in the drum (Oil-dri, vermiculite) shall be used as the absorbent. Other absorbents shall be approved by Environmental through permit required processes prior to purchase and use. Other chemical absorbents to be added to transuranic (TRU) waste shall be approved by Criticality Safety.

(HWMA/RCRA Permit; RPT-NFCS-05, CWR 7.3.12; RPT-NFCS-08, CWR 7.3.6 #2) (RPT-NFCS-09, 1291-2009-023; 1291-2009-025)

3.1.2 The discovery of a *criticality working requirement* (CWR; see def.) violation shall be promptly (by the end of the next shift) reported to Criticality Safety.

(RPT-NFCS-05, CWR 7.3.14)

3.1.3 Prohibited/nonconforming items as referenced in Exhibit 4, List of TRU Prohibited Items, shall **NOT** be shipped to WIPP.

(MP-TRUW-8.2; CCP-PO-003; MP-TRUW-8.1)

3.1.4 Nonconformance reports shall be issued to document the identification of prohibited/nonconforming items.

(MP-TRUW-8.1; MP-TRUW-8.2; CCP-PO-003; HWMA/RCRA Permit)

3.1.5 Various *item description codes* (IDCs; see def.) are incompatible with each other and should be segregated as directed by the SS. See Exhibit 14, Waste Incompatibility by IDC, for a list of incompatible IDCs.

(MP-TRUW-8.1; MP-TRUW-8.2; HWMA/RCRA Permit)

3.1.6 Information entered into the operating record includes:

- The identification of the original waste container(s) and *waste characterization* (see def.) information (including all historical data from the drum and drum lid such as the control number, tamper indicating device (TID) number, dates, and weight, if available)
- IDCs/WMCs
- Approximate quantity of special case waste (SCW) removed from each waste container
- Applicable hazardous waste numbers (HWNs)
- Additional characterization or process knowledge obtained prior to treatment
- Targeted treatment process(es)
- Analytical results.

(HWMA/RCRA Permit)

3.1.7 Sealed containers that are greater than 4 liters are prohibited except for waste material TYPE II.2 packaged in a metal container. Containers that are greater than 4 liters in size shall be fitted with an approved filter vent.

(MP-TRUW-8.1; MP-TRUW-8.2; CCP-PO-003; HWMA/RCRA Permit)
(IDAPA 58.01.05.008 [40 CFR 264.177])

3.1.8 During the treatment process, incompatible wastes or materials shall not be placed in the same container.

(HWMA/RCRA Permit; IDAPA 58.01.05.008 [40 CFR 264.177])

3.1.9 Treatment failures shall be reported within 14 days of discovery, in accordance with Permit conditions 1.M and 1.Y. The report shall include, at a minimum:

- The drum identification number
- The Environmental Protection Agency (EPA) HWN(s)
- Cause of failure (if known)
- Measures taken to prevent additional treatment failures. (Treatment failure examples: separation of *liquid* (see def.) from absorbent, use of incompatible absorbent with liquid or insufficient headspace to accommodate the required volume of appropriate absorbent.)

(HWMA/RCRA Permit)

3.1.10 Hazardous wastes not occurring as co-contaminants with TRU-wastes (non-mixed hazardous wastes) are not acceptable at WIPP.

(MP-TRUW-8.1; MP-TRUW-8.2)

3.1.11 Prohibited items are not packaged in this instruction. Prohibited items are packaged in accordance with INST-OI-24, Packaging Radioactive Waste, for transfer to the facility or to the appropriate storage areas.

3.1.12 The VE process must ensure that all waste items are clearly identified, *packaging materials* (see def.) are identified, and waste is categorized into the appropriate waste material parameters.

(MP-TRUW-8.1; MP-TRUW-8.2)

3.1.13 Any condition that could be adverse to the quality of the data must be reported to the SS.

3.2 Prerequisites

3.2.1 SS: Ensure that governing procedure or work control document is in use prior to initiating VE activities.

3.2.2 A pre-job brief has been performed in accordance with MP-COPS-9.17, Performing Pre-Job Briefings and Post-Job Reviews, as directed by the SS prior to performing work in this procedure.

3.2.3 The correct revision of this procedure is being used.

3.2.4 Headspace gas sampling (HSGS) has been performed prior to receipt of the drum in DCSRS (if the drum is an unknown IDC).

(MP-TRUW-8.1; MP-TRUW-8.2; CCP-PO-003; HWMA/RCRA Permit)

3.2.5 There are two qualified visual examiners available to perform a real-time radiography (RTR)/VE update (RVU), VE of newly generated waste (NGW) packages and NGW VE closure, and VE of legacy waste containers, as necessary.

3.2.6 Personnel scheduled to perform VE are qualified in accordance with QP-VE-0001, Visual Examiner.

3.2.7 Personnel performing tasks in the glovebox have been trained in accordance with 0AWT4140, Glovebox.

3.2.8 The task list indicates that the assay has been completed and displays "QC Complete" for the waste container.

(RPT-NFCS-08, CWR 7.3.6 #1)

3.2.9 The VEE is available for support of the VE activities.

(MP-TRUW-8.2)

3.2.10 The containers have been previously vented prior to starting the examination.

(RPT-TSR-03, SAC 5.2.7)

3.2.11 Form-1900, AMWTP Offsite Waste Stream Profile, is available for use, as applicable.

4.0 INSTRUCTIONS

4.1 General Instructions

NOTE 1: *Sections 4.2 through 4.7 of this instruction may be performed independently as determined by the type of VE to be performed.*

NOTE 2: *The steps in each section may be performed out of sequence or performed concurrently with other steps in the procedure as required during the VE.*

NOTE 3: *VE is used to characterize NGW at the time of generation (such as* secondary waste *[see def.]), to identify its physical form and verify the absence of prohibited items.*

NOTE 4: *Waste that cannot be placed back into the original waste container after examination is packaged as NGW in accordance with INST-OI-24. VE is used to characterize NGW at the time of generation (such as secondary waste) to identify its physical form and verify the absence of prohibited items.*

NOTE 5: *VEOs who are not trained in accordance with 0AWT4140, Glovebox, may witness other personnel (e.g., OTs) performing tasks within the glovebox in support of the examination in order to enter or verify examination data in* Waste Tracking System *(WTS; see def.).*

NOTE 6: *A VEO who is trained in accordance with 0AWT4140, but not qualified as an operations technician may perform tasks using the glovebox under the guidance of a trained and qualified operations technician.*

4.1.1 SS**:** Ensure that all prerequisites have been met.

NOTE: *All personnel have the responsibility and authority to issue a stop-work order for any work activity if a health and safety situation exists that poses imminent danger to personnel, equipment, or the environment.*

4.1.2 **IF** performing VE of a *legacy* (see def.) container is part of the planned activity,
THEN prior to opening the container, if possible, obtain any historical data from the drum and drum lid such as:

- Control number
- TID number
- Dates and weight, if available.

4.1.3 **IF** at any point during the examination, the appearance of waste is observed to be in violation of an administrative control measure contained in this instruction or INST-OI-16, INST-OI-73, and INST-OI-75 for work within the DCSRS, or INST-OI-68 for work in WMF-628,
THEN STOP work
AND contact the SS for guidance.

4.1.4 Perform the following as necessary:

4.1.4.1 Log on to WTS.

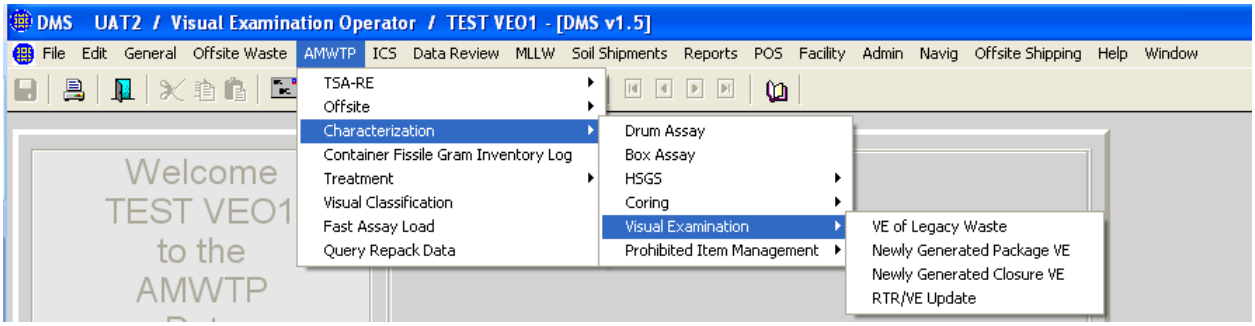

Figure 1. Characterization – VE – Path.

4.1.4.2 Access the appropriate screen through the AMWTP, Characterization sub-menu.

4.1.4.3 Enter the container number and press the F8 key to auto-populate the screen, if necessary.

4.1.4.4 Review the container data for accuracy vs. the physical container.

4.1.4.4.1 **IF** the container data is **NOT** correct, **THEN** contact the SS.

4.1.4.5 Verify the "Container Filters" screen has been updated, as applicable.

4.1.5 Report any condition to the SS that could be adverse to the quality of the data.

4.1.6 **GO TO** the appropriate section in the following table for the task to be performed.

Task	Section to Perform
Visual Examination Instruction	4.2
Visual Examination of Legacy Waste Containers	4.3
Visual Examination of Newly Generated Waste (see def.) Packages	4.4
Visual Examination of Newly Generated Waste Closure	4.5
RTR/VE Update (Supplemental Analysis to RTR or VE Batch)	4.6
Post Job Review	4.7

4.2 Visual Examination Instruction

NOTE 1: *This section is used in conjunction with the appropriate type of VE being performed.*

NOTE 2: *Many of the WTS entries are performed by selecting "Yes" or "No," and accompanied by a comment field to the right of the entry. Selections of "Yes" are accompanied by an appropriate comment describing the item(s). Additional space may be used in the "Visual Exam Comment" field on the IDC Verification tab. The exceptions to this rule are the responses to the Sharp Objects questions.*

4.2.1 **IF** conducting a VE of a legacy container,
THEN enter all discernable historical marking (e.g., labeling and tags) from the drum in the "Visual Exam Comment" field.

4.2.2 **WHEN** an audio/video (A/V) recording is used,
THEN identify a complete waste container inventory in WTS and on the A/V record.

4.2.3 During the examination, describe all the contents of the waste container clearly identifying all discernible waste items, *packaging materials*, and waste material parameters to provide an inventory list of the waste container contents.

NOTE: *The selection of "No" in the "Liner Present" field will render the remainder of the liner fields inactive. Under this condition, these fields will be set by WTS to standard default values.*

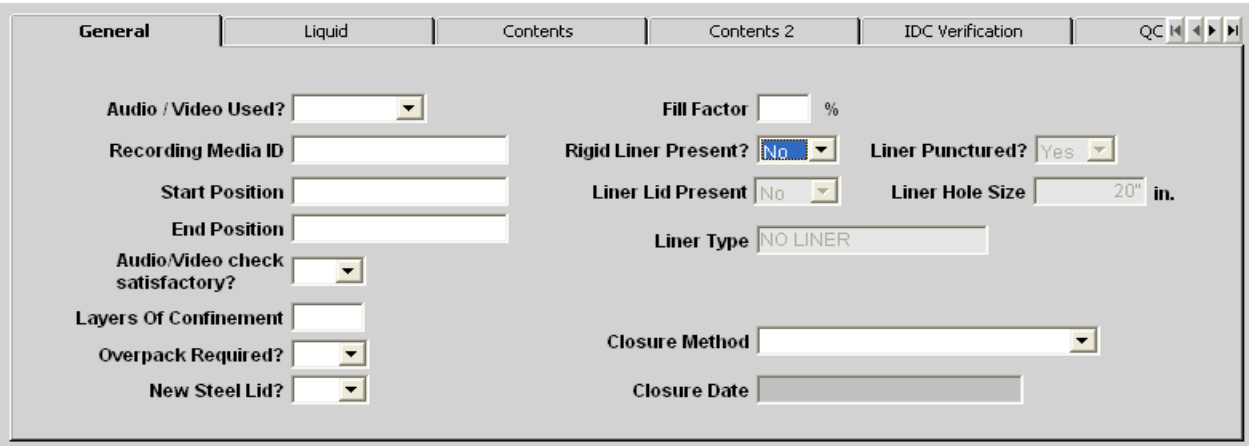

Figure 2. Characterization VE General Tab – Rigid Liner Present? "No."

4.2.4 Enter the absence or presence of a rigid liner, as applicable (see Figure 2).

4.2.4.1 **IF** the selection is "No,"
THEN observe the following fields are grayed-out (non-editable):

- Liner Lid Present – No
- Liner Puncture?
- Liner Hole Size – 20"
- Liner Type – No Liner.

4.2.4.2 **GO TO** Step 4.2.11.

NOTE 1: *The selection of "No" in response to the "Liner Lid Present" field will render the remainder of the liner fields inactive. Under this condition, these fields will be set by WTS to standard default values.*

NOTE 2: *The liner vent hole must be a minimum of 20 in. to meet the requirement for "No Liner Lid Present."*

4.2.5 Enter the absence or presence of liner lid, as applicable (see Figure 3).

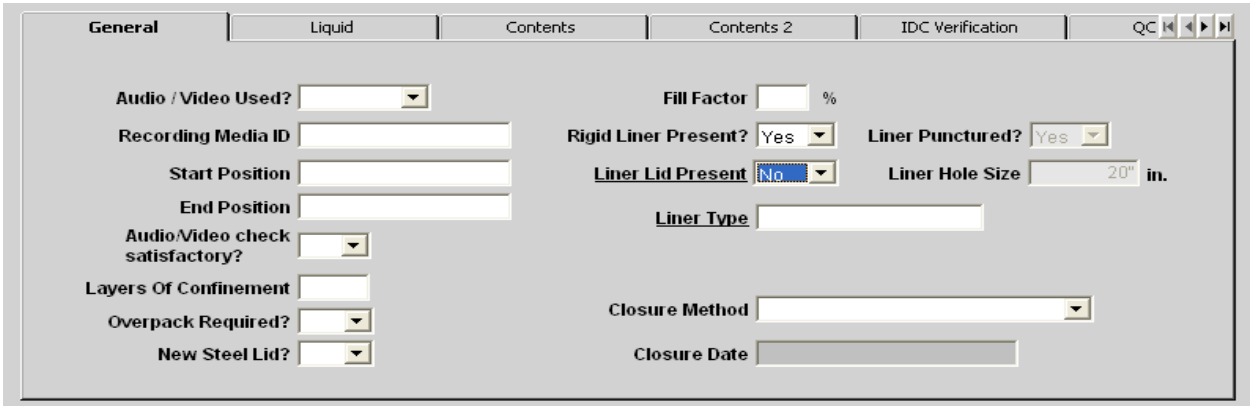

Figure 3. Characterization VE/General Tab – Liner Lid Present "No."

4.2.5.1 **IF** the selection is "No,"
THEN observe the following fields are grayed-out (non-editable):

- Liner Punctured – Yes
- Liner Hole – 20 inches.

NOTE 1: *The* vented liner *(see def.) is required to have a minimum 0.3-in. diameter opening for it to be considered vented.*

NOTE 2: *The proper venting of a liner by the insertion of an approved filter at HSGS or 615/Drum Vent System (DVS), assures the liner is vented with an opening of greater than 0.3 in. based on the design of the filter and drum punch. The RTR event or the VE event provides the verification that the liner is punctured.*

4.2.6 **IF** the liner is **NOT** vented,
THEN perform the following:

4.2.6.1 **STOP** work
AND notify SS.

4.2.6.2 **WHEN** allowed to proceed,
THEN enter "No" in the "Liner Punctured?" field (see Figure 3).

4.2.6.3 Initiate an NCR in accordance with MP-Q&SI-5.4, Identification of Nonconforming Conditions.

4.2.6.4 SS: Notify on-call environmental support by phone and e-mail with the following information:

A. Container ID

B. NCR number, as applicable

C. Condition as "Unvented"

D. Disposition of container

E. Date of event.

4.2.7 **IF** the rigid liner lid is vented,
THEN remove the rigid liner lid, as applicable.

4.2.8 Enter the "liner punctured?" status, as applicable (see Figure 3).

4.2.9 Enter the "Liner Hole Size," as applicable (see Figure 3).

4.2.10 Select the appropriate liner type, as listed in Exhibit 12, Description of Liners, as applicable selecting the "Liner Type" field and pressing the F9 key and selecting the appropriate liner type.

4.2.11 Enter the "Fill Factor" percentage for the waste container, using Exhibit 3, Fill Factor, as a guide.

NOTE 1: *The closure method of "zipped and tied" has been approved for AMWTP by WIPP and is entered as "twisted and taped."*

NOTE 2: *Packaging materials (drum bags or O-Ring Bags) breached by the insertion of a filter vent, or that have been torn by rigid liner lid cutting and removal, are considered non-breached in those instances to account for the fact that the materials were breached during the drum vent/headspace gas activity or in preparation for examination.*

NOTE 3: *Packaging material consists of the drum, 90-mil liner, plywood spacers, and the outermost two layers of confinement that are used as packaging for the waste containers.*

4.2.12 Enter the outermost layer of confinement closure method for the waste in the "Closure Method" field (see Figure 3).

(CCP-PO-003)

4.2.13 Enter additional closure method(s), if different than the outermost layer, in the "Visual Exam Comment" field, located on the "IDC Verification" tab.

NOTE 1: *Sealed containers less than 4L are not reported as layers of confinement.*

NOTE 2: *Packaging materials are entered as packaging in the Waste Material Item screen or on the Add Material Item table.*

4.2.14 Determine the layers of confinement for the waste container, **AND** enter the data as the examination progresses (see Figure 3).

(CCP-PO-003)

NOTE: *The VEE may determine that a complete examination is not required if there is adequate acceptable knowledge (AK) for the waste, the waste has been previously examined via RTR or visual examination (valid exam), to facilitate removal of a prohibited item, and if further incursion into the waste will not yield additional characterization data or unloading the waste presents an unnecessary risk to operating or examination personnel. Any such examination authorized by a VEE will be accompanied by appropriate reasoning entered in "IDC Verification" tab "Visual Exam Comment" field as part of the record.*

4.2.15 **IF** a complete exam is **NOT** required,
THEN perform the following:

4.2.15.1 Enter the appropriate comments in the "IDC Verification" tab, "Visual Exam Comments" field.

4.2.15.2 Re-use the original drum, as applicable.

WARNING 1

Severe personal injury could occur when some incompatible wastes (as defined in Exhibit 14) are stored together.

WARNING 2

Some waste may be reactive, corrosive, or pyrophoric causing severe personal injury.

4.2.16 Verify that incompatible wastes (as defined in Exhibit 14) are **NOT** stored together.

(HWMA/RCRA Permit)

4.2.17 **IF** waste appears to be reactive, corrosive, pyrophoric,
OR is reacting with other materials,
THEN STOP work
AND perform the following:

4.2.17.1 Exit the glovebox/SSC, as applicable.

4.2.17.2 Warn others.

4.2.17.3 Isolate the area.

4.2.17.4 Notify the SS.

4.2.18 **WHEN** access to the WTS terminal is regained,
THEN enter the appropriate data.

NOTE: *The notation of the items in the following step is not a WIPP requirement. However, the presence of any of these, when applicable, is entered into the "Visual Exam Comment" field in the event that further assay reveals the waste to be a candidate for low level waste (LLW) treatment and/or disposal.*

4.2.19 **IF** any of the following items are present in the waste,
THEN enter the data in the "Visual Exam Comment" field:

- Etiological agents (i.e., blood, medical waste)
- Radioactive sealed sources (i.e., radiation instrument check sources, smoke detectors)
- Animal carcasses
- Asbestos
- Batteries (other than wet cell)
- Graphite
- Lab Pack
- Lead (identify if elemental)
- Other (see Appendix A, List of LLW/MLLW Prohibited Items and Restricted Items, for list of prohibited Items/restricted Items for LLW which may be visible, and identify if present)

4.2.19.1 See Appendix A for list of items, descriptions, and additional information/examples.

NOTE 1: *Liquid, permitted for treatment, will be treated using the appropriate operating procedure during repackaging, or the RVU, and changes entered at that time, as necessary.*

NOTE 2: *The container record will be updated for prohibited item removal or treatment after the completion of the examination.*

NOTE 3: *Prohibited items are not packaged using this instruction. Prohibited items are segregated, packaged, treated, or returned to the customer in accordance with INST-OI-24, INST-FOI-23, Special Case Waste Operations, or other approved procedures as applicable.*

4.2.20 **WHEN** a "Yes" response to a liquid or prohibited item question is selected,
THEN enter a brief description in the comment field to the right of the entry describing the liquid or condition.

4.2.20.1 Record any pertinent waste data (labels, stamps, etc.) on the A/V recording medium, as applicable,
AND enter data in the "Visual Exam Comment" field.

(MP-TRUW-8.2)

4.2.20.2 Inspect the waste for prohibited items as listed in Exhibit 4,
AND enter the absence or presence of these items as the examination progresses.

(MP-TRUW-8.1; CCP-PO-003)

4.2.21 Select the "Liquid" tab (see Figures 4 and 5).

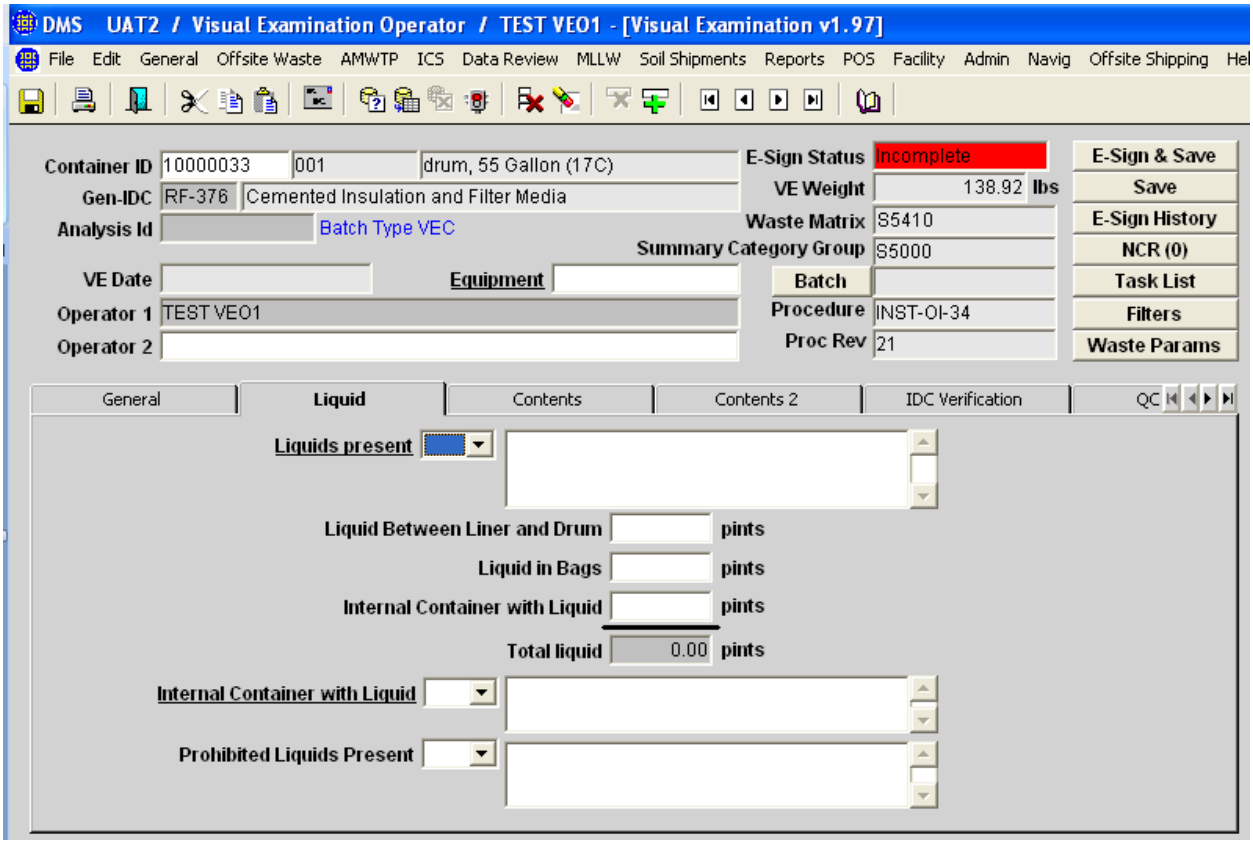

Figure 4. Characterization VE Liquids Tab.

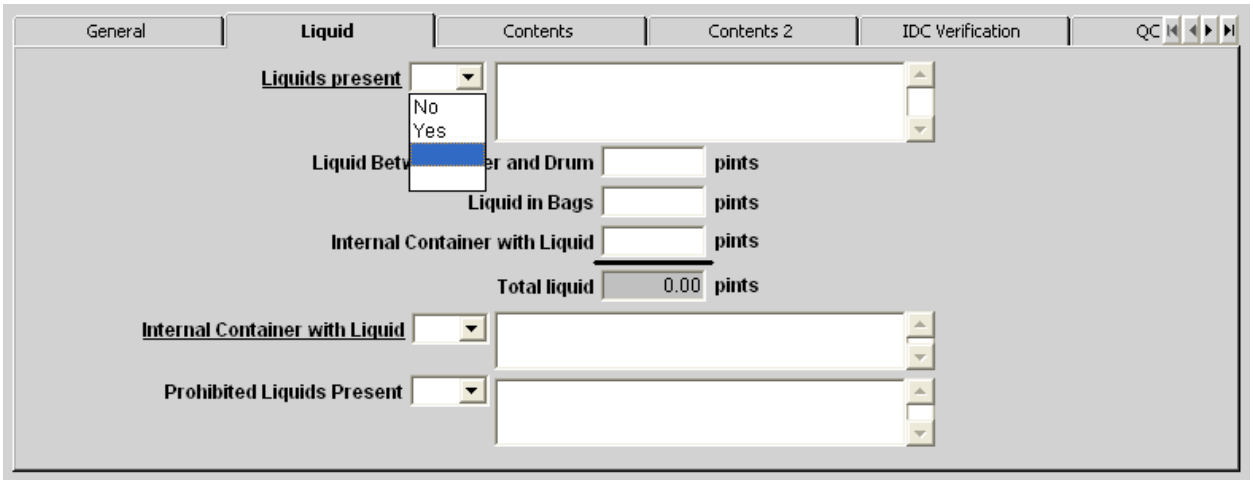

Figure 5. Characterization VE Liquids Present Response Selections.

NOTE 1: *Prohibited liquids (permitted for treatment) are treated using the applicable operating procedure (INST-OI-68 or INST-OI-75). Non-treatable liquids are segregated from the waste stream and removed from the glovebox in accordance with INST-OI-24.*

NOTE 2: *The selection of a "No" response in the "Liquids Present" field will render the remainder of the "Liquids" fields inactive. Under this condition, these fields will be set by WTS to standard default values.*

4.2.21.1 **IF** no liquids are present,
THEN select "No" in the Liquids present field (see Figure 6).

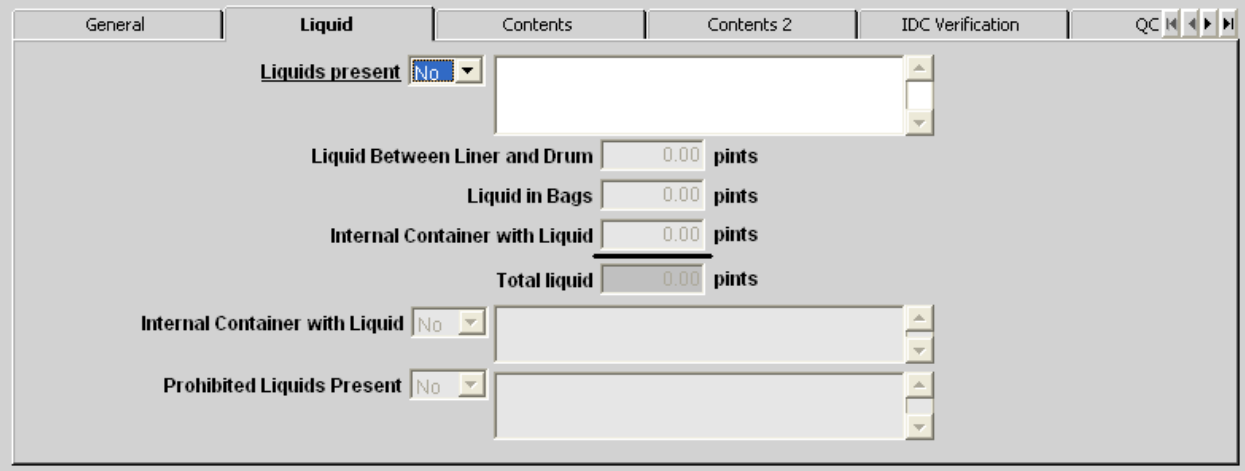

Figure 6. Characterization VE Liquids Present Response – "No."

4.2.21.2 **IF** the waste has been packaged with Oil Dri or another absorbent,
AND liquid is present in the waste,
THEN use the existing original absorbent to absorb the liquid.

(RPT-NFCS-08, CWR 7.3.6 #2; RPT-NFCS-09)

4.2.21.3 **IF** observable liquid can be quantified (see Figure 7), **THEN** perform the following:

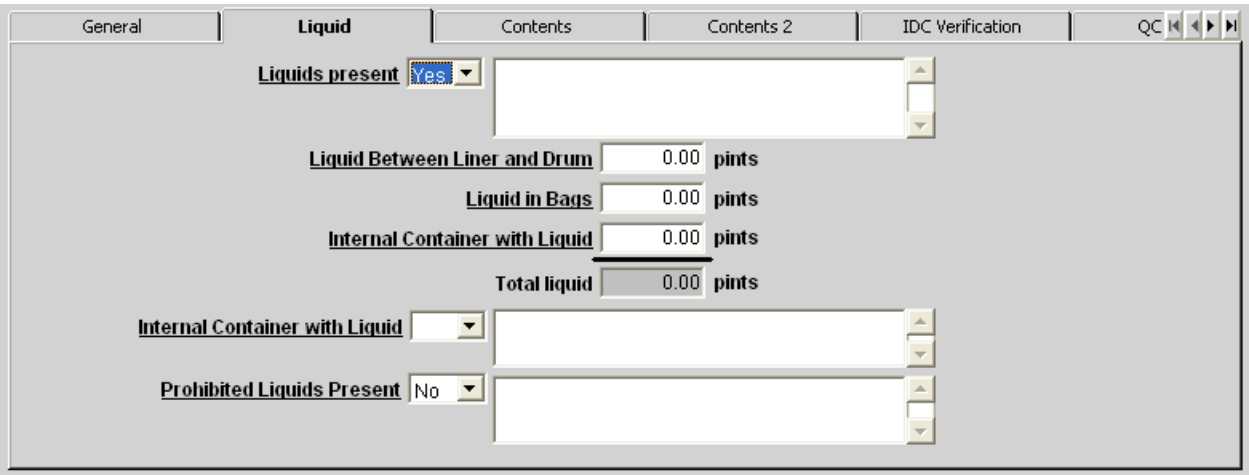

Figure 7. Characterization VE Liquids Present Response – "Yes."

4.2.21.3.1 Select "Yes" in the "Liquids Present" field.

4.2.21.3.2 Enter comment in the field to the right of the entry describing the liquid or condition.

4.2.21.3.3 Enter the volume of liquid in the appropriate field.

4.2.21.3.3.1 **IF** the liquid is present in an *internal container* (see def.), **THEN** select "Yes" in the "Internal Container w/Liquid" field,
AND enter an appropriate comment in the field to the right of the "Internal Container w/Liquid" field.

NOTE: *Observable liquid in the amount of 60 ml equals approximately 4 tbsp. or 1/4 cup in volume. The 3% measurement is based on that of a* small container *(see def.) (i.e., 2-liters), in which 3% would equal 60 ml. Consequently, an internal container larger than 2 liters, containing 3% liquid by volume would represent a prohibited volume. Data regarding liquid in prohibited volumes, within an internal container, are documented with statements such as "greater than 3% in a 2-liter container," "greater than 1/4 cup," etc.*

4.2.21.3.3.2 **IF** the volume of observable liquid in a small container exceeds 60 ml,
THEN select "Yes" in the "Prohibited Liquids Present" field,
AND enter an appropriate comment in the field to the right of the entry.

4.2.21.3.4 **IF** the volume of observable liquid in a small container is less than 60 ml (or 3% by volume),
THEN select "No" in the "Prohibited Liquids" field.

4.2.21.3.5 **IF** the volume of observable liquid in an internal container (greater than 2 liters) exceeds 60 ml by volume,
THEN select "Yes" in the "Prohibited Liquids Present" field,
AND enter an appropriate comment in the field to the right of the entry.

4.2.21.3.6 **IF** the volume of observable liquid in an internal container is less than 60 ml, **THEN** select "No" in the "Prohibited Liquids" field.

4.2.21.4 **IF** liquid-bearing, non-transparent internal containers **CANNOT** be opened and quantified (see Figure 7), **THEN** perform the following:

4.2.21.4.1 Select "Yes" in the "Liquids Present" field.

4.2.21.4.2 Enter volume of the container as the volume of liquid (in pints) in the "Internal Containers w/ Liquid" field.

4.2.21.4.3 Select "Yes" in the "Internal Containers w/Liquid" field.

4.2.21.4.4 Enter the volume of the container and any visual markings on the container in the field to the right of the "Internal Containers w/Liquid" field.

4.2.21.4.5 Select "Yes" in the "Prohibited Liquids Present" field.

4.2.21.4.6 Enter an appropriate comment in the field to the right of the entry.

4.2.21.5 **IF** liquid is **NOT** present in internal containers in a prohibited volume **AND** the Total Liquid is **NOT** highlighted red, **THEN** select "No" in the "Prohibited Liquids Present" field (see Figure 7).

4.2.21.6 **IF** liquid is prohibited, as defined in Exhibit 4, **THEN** perform the following:

4.2.21.6.1 Select "Yes" in the "Prohibited Liquids Present" field (see Figure 8).

4.2.21.6.2 Initiate an NCR in accordance with MP-Q&SI-5.4.

4.2.21.6.3 Notify the SS.

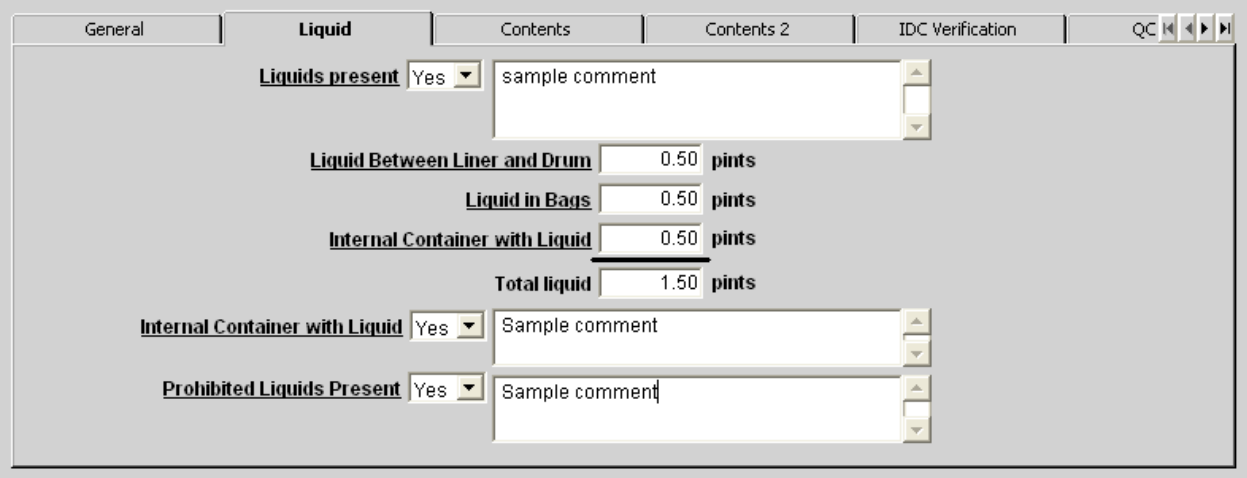

Figure 8. Characterization VE Liquids Tab – Example (Completed).

4.2.21.6.4 SS: Notify on-call environmental support by phone and e-mail with the following information:

A. Container that had prohibited item

B. NCR number, as applicable

C. Treatment or disposition of prohibited item

D. Container that prohibited item was segregated into, as applicable

E. Date of event.

(HWMA/RCRA Permit; DEQ ID #4890008952)

4.2.21.7 Segregate liquid for removal (or permitted treatment using the applicable operating procedure) as applicable.

4.2.21.8 **WHEN** liquid is identified (see Figure 9),
THEN enter the quantity, by unit volume, in the "Waste Material Items" tab, Waste Items by Volume" table.

4.2.21.8.1 Select the "SAVE" button to save data entered.

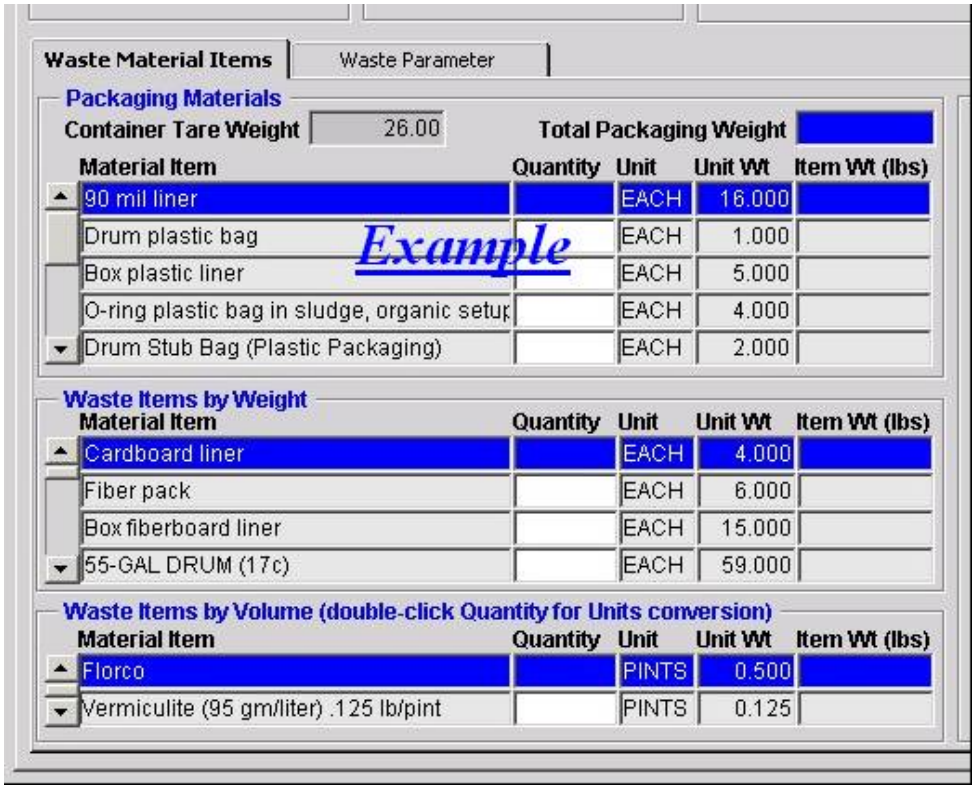

Figure 9. Characterization VE Waste Material Items Tab.

4.2.22 Select the "Contents" tab (see Figure 10).

(MP-TRUW-8.1; MP-TRUW-8.2; CCP-PO-003)

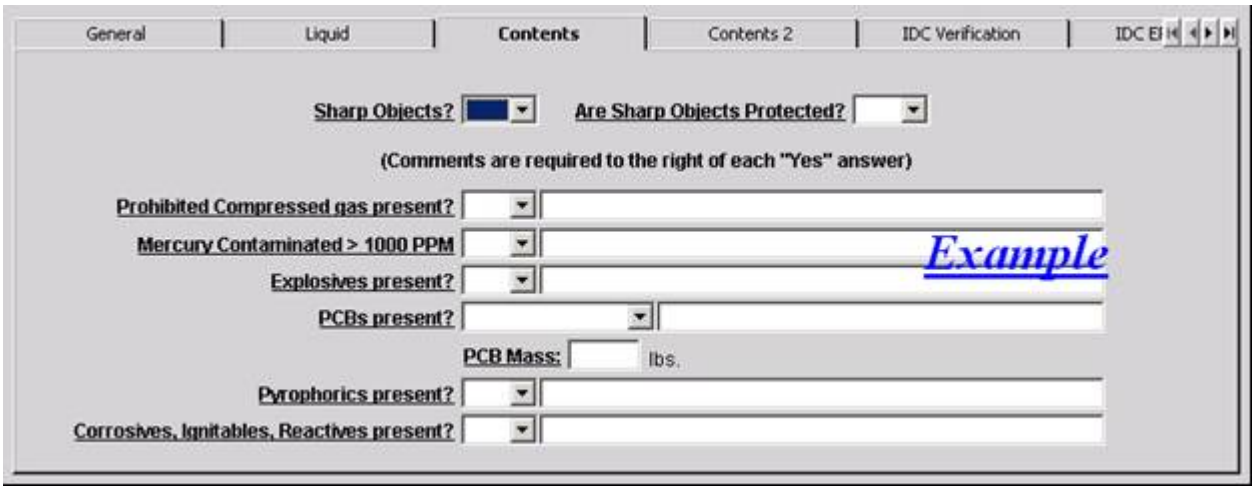

Figure 10. Characterization VE Contents Tab.

NOTE 1: *The selection of "No" in response to the "Sharp Objects?" question will cause the "Are Sharp Objects Protected?" field to auto-populate a "Yes" response.*

NOTE 2: *In accordance with Exhibit 4, the "Sharp Objects?" subject field includes heavy items that are not blocked or braced.*

4.2.23 **IF** sharp objects are not present (see Figure 11),
THEN select "No" in the "Sharp Objects?" field.

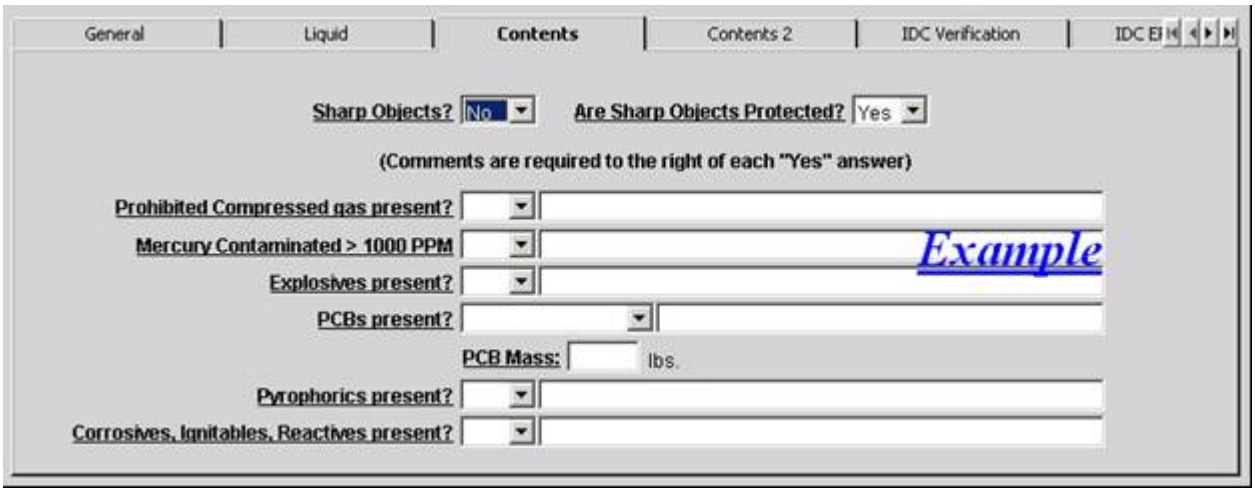

Figure 11. Characterization VE Contents Tab "Sharp Objects" Response "No."

4.2.24 **IF** sharp or non-braced objects that present a puncture hazard to the drum are present,
THEN select "Yes" in the "Sharp Objects?" field.

NOTE 1: *The rigid liner provides protection from sharp or non-braced objects.*

NOTE 2: *Sharp or non-braced objects that are not protected will be treated through payload overpack as implemented through the task list; therefore, NCRs are not required to ensure remediation.*

4.2.25 Enter "No" if sharp or heavy non-braced objects are protected.

4.2.26 **IF** prohibited compressed/pressurized gas containers are **NOT** present (e.g., unvented, pressurized gas containers, aerosol cans, and fire extinguishers),
THEN select "No" in the "Prohibited Compressed gas present?" field.

4.2.27 **IF** prohibited compressed/pressurized gas containers are present,
THEN select "Yes" in the "Prohibited Compressed gas present?" field,
AND enter the appropriate comment in the field to the right of the entry.

NOTE 1: *Mercury is not prohibited unless the criteria for prohibited liquids are exceeded.*

NOTE 2: *Mercury in a liquid form is prohibited from supercompaction.*

(HWMA/RCRA Permit)

4.2.28 **IF** mercury contaminated waste is not present,
THEN select "No" in the "Mercury Present" field.

4.2.28.1 **IF** mercury contaminated waste is present,
THEN select "Yes" in the "Mercury Present" field
AND enter the appropriate comment in the field to the right of the entry (e.g., mercury absorbed).

4.2.29 **IF** explosive waste/material is not present,
THEN select "No" in the "Explosives present?" field.

4.2.30 **IF** explosive waste/material is present,
THEN STOP work
AND perform the following:

4.2.30.1 Exit the glovebox/SSC, as applicable.

4.2.30.2 Warn others.

4.2.30.3 Isolate the area.

4.2.30.4 Notify the SS.

4.2.30.5 **WHEN** access to the WTS terminal is regained,
THEN select "Yes" in the "Explosives present?" field,
AND enter the appropriate comment in the field to the right of the entry.

NOTE: *Polychlorinated biphenyls (PCBs) are not processed through the Supercompactor.*

4.2.31 **IF** PCB-contaminated waste is not present (see Figure 12), **THEN** select "No" in the "PCBs present?" field.

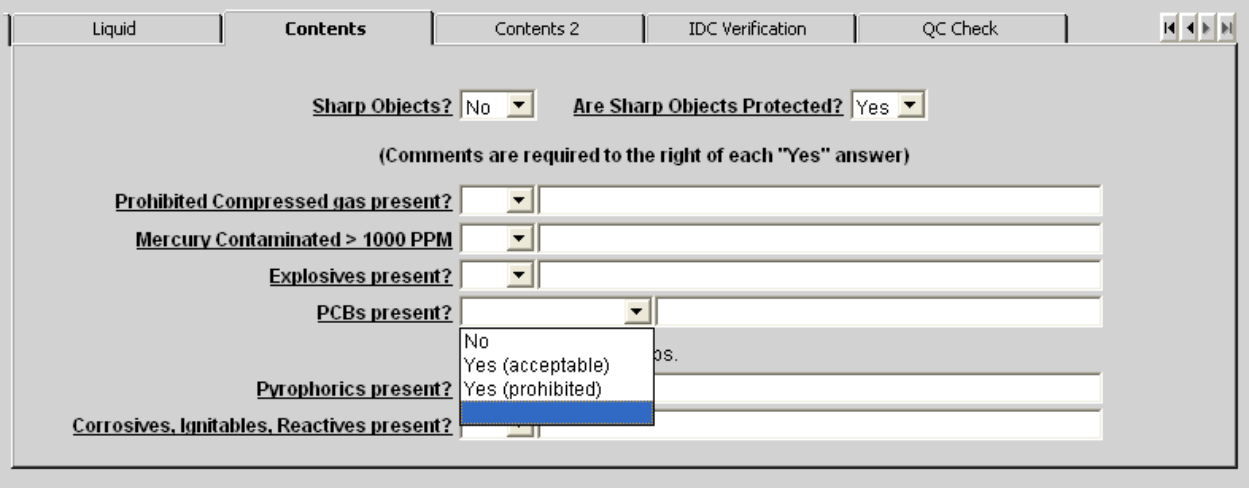

Figure 12. Characterization VE Contents Tab "PCBs Present?" Available Selections.

4.2.32 **IF** non-prohibited PCB-contaminated waste is present, in accordance with Exhibit 4 (see Figure 12), **THEN** perform the following:

4.2.32.1 Select "Yes (acceptable)."

4.2.32.2 Enter a description of the non-prohibited PCBs in the Comment field.

4.2.32.3 Enter the weight of the non-prohibited PCBs in the "PCB Mass" field.

4.2.32.4 Ensure the non-prohibited PCBs are included in the waste container inventory with a description, weight, and assignment to the applicable waste parameters.

4.2.32.5 **IF** the non-prohibited PCBs are present in a non-PCB-contaminated homogenous waste container, **THEN** segregate the PCBs for removal from the glovebox during repackaging, as directed by the SS.

NOTE: *In the event that PCB-contaminated liquid has cross contaminated other waste in the container, the PCB mass equals the total weight of the waste.*

4.2.33 **IF** WIPP-prohibited PCB-contaminated waste is present, in accordance with Exhibit 4 (see Figure 13),
THEN perform the following:

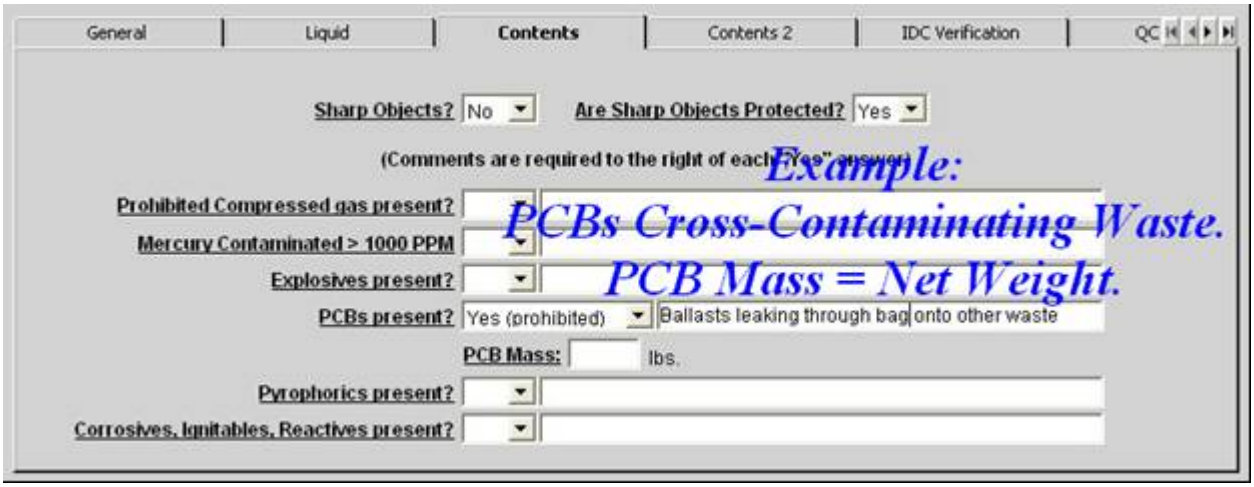

Figure 13. Characterization VE Contents Tab "PCBs present?" "Yes (prohibited)" Example.

4.2.33.1 Select "Yes (prohibited)."

4.2.33.2 Enter a description of prohibited PCBs in the "Comment" field.

4.2.33.3 Enter the weight of the prohibited PCBs in the "PCB Mass" field as follows:

4.2.33.3.1 **IF** waste is cross-contaminated with prohibited PCBs,
THEN enter the net weight of the container in the "PCB Mass" field.

4.2.33.3.2 **IF** prohibited PCB waste is contained within the original waste item packaging,
THEN enter the weight if the item in the "PCB Mass" field.

4.2.33.4 Ensure the prohibited PCBs are included in the waste container inventory with a description, weight, and assignment to the applicable waste parameters.

(MP-TRUW-8.1; CCP-PO-003)

4.2.33.5 Initiate an NCR in accordance with MP-Q&SI-5.4.

4.2.34 **IF** pyrophoric waste is not present,
THEN select "No" in the "Pyrophorics present?" field.

4.2.34.1 **IF** pyrophoric waste is present,
THEN select "Yes" in the "Pyrophoric present?" field
AND enter the appropriate comment in the field to the right of the entry.

4.2.35 **IF** corrosive, ignitable or reactive waste is not present,
THEN select "No" in the "Corrosives, Ignitables or Reactives present?" field.

4.2.35.1 **IF** corrosive, ignitable or reactive waste/material is present,
THEN select "Yes" in the "Corrosives, Ignitables or Reactives present?" field
AND enter the appropriate comment in the field to the right of the entry.

4.2.36 Select the "Contents 2" tab.

4.2.37 **IF** wet cell batteries are not present (see Figure 14),
THEN select "No" in the "Wet Cell Batteries present?" field.

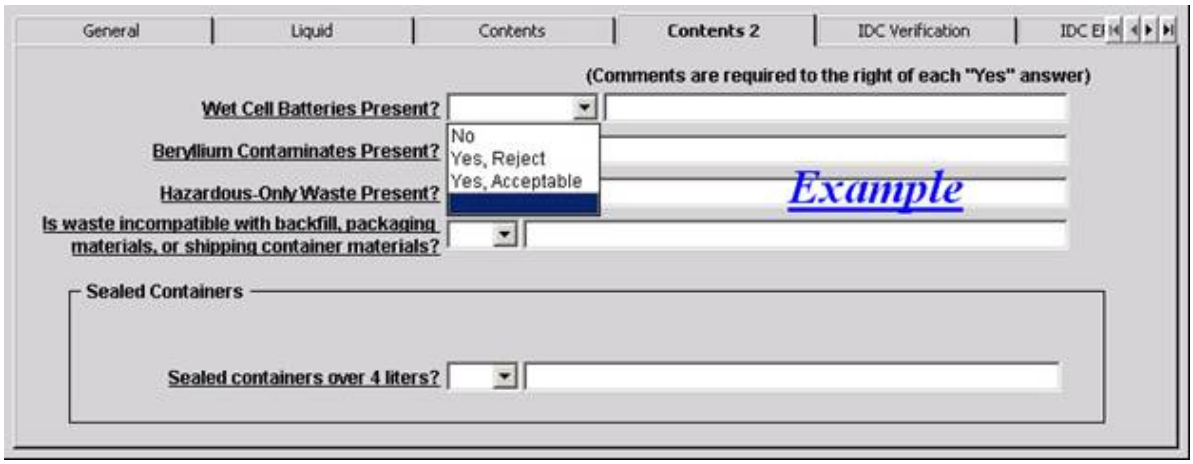

Figure 14. Characterization VE "Contents 2" Tab Wet Cell Battery Selections.

NOTE: *Wet cell batteries are WIPP acceptable ONLY if the battery can be demonstrated to be previously drained of any liquid.*

4.2.38 **IF** WIPP-acceptable wet cell batteries are present (see Figure 15),
THEN select "Yes, Acceptable" in the "Wet Cell Batteries Present?" field,
AND enter the appropriate comment in the field to the right of the entry.

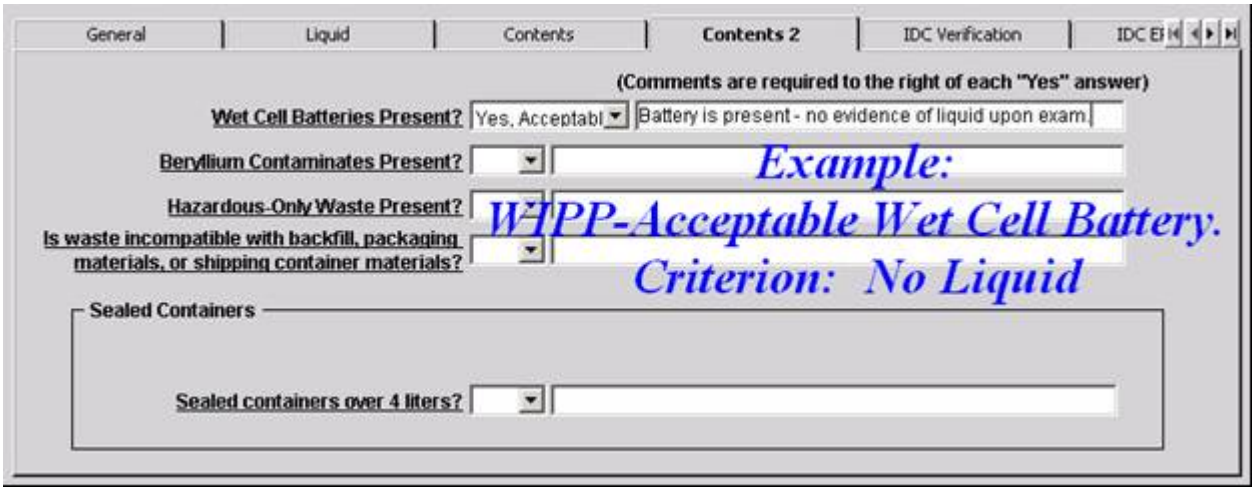

Figure 15. Characterization VE Contents 2 Tab – WIPP Acceptable Wet Cell Battery.

4.2.39 **IF** WIPP-prohibited wet cell batteries are present (see Figure 15),
THEN select "Yes, Reject" in the "Wet Cell Batteries present?" field,
AND enter the appropriate comment in the field to the right of the entry.

NOTE 1: *Entries of beryllium include the physical form (fines, metal pieces).*

(CCP-PO-003)

NOTE 2: *Beryllium is entered separately in the container inventory for reporting and tracking purposes, as applicable.*

4.2.40 **IF** beryllium contaminants are not present,
THEN select "No" in the "Beryllium Contaminates Present?" field.

4.2.40.1 **IF** beryllium contaminants are present,
THEN select "Yes" in the "Beryllium Contaminates Present?" field,
AND enter the appropriate comment in the field to the right of the entry.

4.2.41 **IF** hazardous-only waste is not present,
THEN select "No" in the "Hazardous-Only Waste Present?" field.

4.2.41.1 **IF** hazardous-only waste is present,
THEN select "Yes" in the "Hazardous-Only Waste Present?" field,
AND enter the appropriate comment in the field to the right of the entry.

4.2.42 **IF** waste (incompatible with backfill, packaging materials, or shipping container materials) is not present,
THEN select "No" in the "Is waste incompatible with backfill, packaging materials, or shipping container materials?" field.

4.2.42.1 **IF** waste (incompatible with backfill, packaging materials, or shipping container materials) is present,
THEN select "Yes" in the "Is waste incompatible with backfill, packaging materials, or shipping container materials?" field,
AND enter the appropriate comment in the field to the right of the entry.

NOTE: *The data in the "Impenetrable Dense Objects" field on the "Contents 2" tab, when used as a processing tool for manual size reduction is not a WIPP Data Quality Objective (DQO). When the data represents the inability, using RTR to verify the absence of prohibited items due to the density and shape of the object, the data represents a WIPP DQO.*

4.2.43 **IF** an open NCR exists for the container due to impenetrable dense objects,
THEN select the appropriate response based on the data contained in the NCR, as applicable.

4.2.44 **IF** an open NCR does **NOT** exist for the container due to impenetrable dense objects,
THEN select "No," as applicable.

4.2.45 **IF** sealed containers >4 liters are **NOT** present,
THEN select "No" in the "Sealed containers over 4 liters?" field.

4.2.46 **IF** sealed containers >4 liters are present,
THEN select "Yes" in the "Sealed containers over 4 liters?" field,
AND enter the appropriate comment in the field to the right of the entry.

4.2.46.1 **IF** performing VE of legacy waste,
THEN add an additional layer in the "Layers of Confinement" field located on the "General" tab.

4.2.47 **IF** any prohibited/non-conforming items are detected,
THEN perform the following:

4.2.47.1 Enter a comment about the prohibited/nonconforming item in the "Visual Exam Comment" field.

4.2.47.2 Notify the SS about the prohibited/nonconforming item.

4.2.47.3 Segregate the prohibited/nonconforming item for removal and processing in accordance with INST-OI-24, as applicable.

4.2.47.4 Initiate an NCR in accordance with MP-Q&SI-5.4.

4.2.47.5 Notify the SS.

4.2.47.6 SS: Notify on-call environmental support by phone and e-mail with the following information:

A. Container that had prohibited item

B. NCR number, as applicable

C. Treatment or disposition of prohibited item

D. Container that prohibited item was segregated into, as applicable

E. Date of event.

(HWMA/RCRA Permit)

4.2.48 Select the "Waste Params" button and perform the following, as appropriate (see Figure 16):

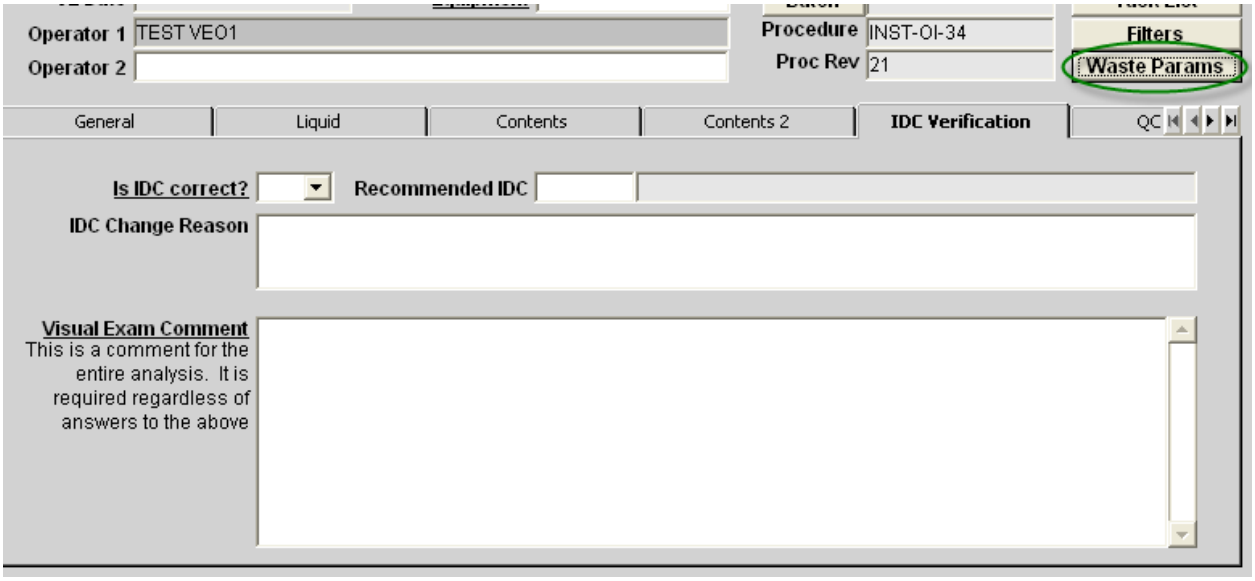

Figure 16. Characterization VE IDC Verification Tab and Waste Params Selection.

NOTE: *Selecting items and entering quantities from the "Waste Material Items" tab will result in the correct waste material parameter being displayed in the "Waste Parameter" tab but will not change the gross weight of the container.*

4.2.48.1 **IF** entering items as packaging materials from the original container configuration (see Figure 17),
THEN select the items (remaining as packaging) from the "Packaging Materials" list and enter the quantity.

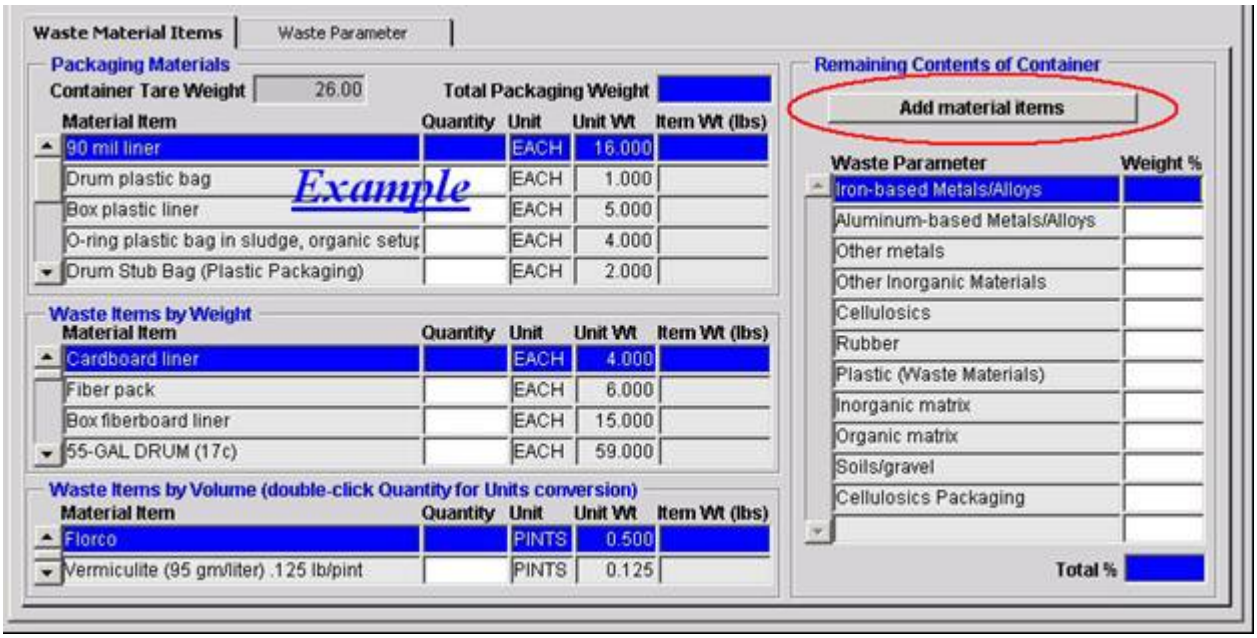

Figure 17. Characterization VE Params Selection, Waste Materials Screen, Waste Material Items Tab.

4.2.48.2 **IF** entering waste items by weight from the original container contents (see Figure 17),
THEN select the items from the "Waste Items by Weight" list and enter the quantity.

4.2.48.3 **IF** entering items by volume from the original container contents (see Figure 17),
THEN select the items from the "Waste Items by Volume" list and enter the quantity.

4.2.48.4 **IF** a waste item is **NOT** included in the "Waste Material Items" lists (see Figure 18),
THEN select the "Add Material Items" button in the "Remaining Contents of Container" block.

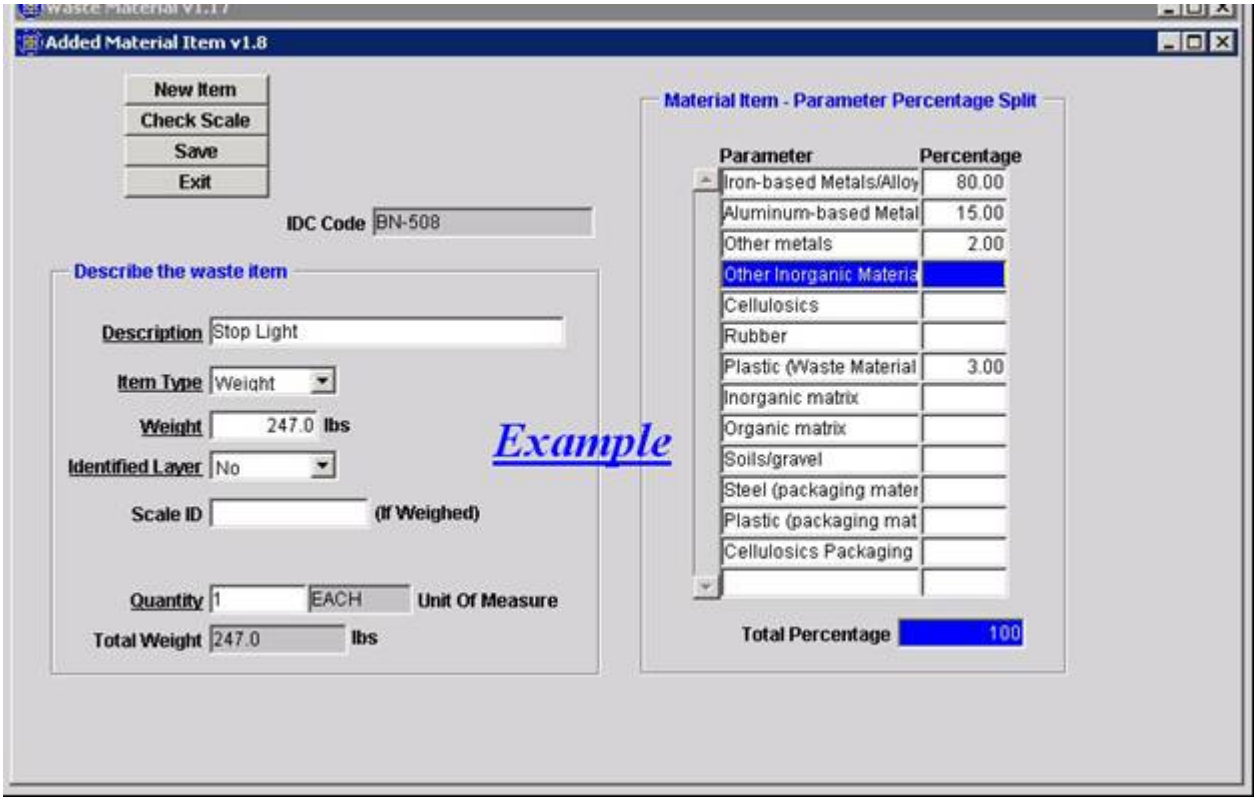

Figure 18. Characterization VE Waste Params Tab Add Material Items.

4.2.48.4.1 Select the "New Item" button.

4.2.48.4.2 Place the cursor in the "Description" field and enter a brief description of the waste item.

4.2.48.4.3 Select the "Item Type" field, and select "Weight" or "Volume," as appropriate.

4.2.48.4.4 Enter the following data, as appropriate, using **ONE** of the following methods:

4.2.48.4.4.1 **IF** entering waste items by weight,
THEN perform the following:

4.2.48.4.4.1.1 Enter the weight of the item.

4.2.48.4.4.1.2 **IF** weighed on a certified scale,
THEN perform the following:

4.2.48.4.4.1.2.1 Select the "Scale ID" field.

4.2.48.4.4.1.2.2 Press the F9 key.

4.2.48.4.4.1.2.3 Select the correct scale.

4.2.48.4.4.1.3 Select the "Quantity" field and enter the number of like items.

4.2.48.4.4.2 **IF** entering item(s) by volume,
THEN obtain available reference data,
AND perform the following:

4.2.48.4.4.2.1 Enter the weight (per unit volume) from available reference data, as provided by the VEE.

4.2.48.4.4.2.2 Select the "Quantity" field and enter the number of units.

4.2.48.4.5 Select the "Percentage" field opposite the correct "Parameter" field(s) and enter the appropriate waste parameter(s) by weight percent.

NOTE: *The "Total Percentage" for each item entered must equal 100%.*

4.2.48.4.6 Select the next editable field to display the "Total Percentage."

4.2.48.4.7 Select the "Save" button.

4.2.48.4.8 **IF** entering additional items,
THEN repeat Steps 4.2.48.4 through 4.2.48.4.7 for each additional item, as necessary.

4.2.48.4.9 Select the "Save" button.

4.2.48.4.10 Enter additional items, and select the "Save" button for each additional item, as necessary.

4.2.48.4.11 Select the "Exit" button**.**

4.2.49 Enter the remaining waste in the appropriate waste parameter by weight percent on the Remaining Contents of Container table.

4.2.49.1 Select Save.

NOTE: *The "Visual Exam Comment" field may be in the "General" or "IDC Verification" tab.*

4.2.50 Enter a description of the waste that was entered in the waste parameter tab, "Remaining Contents of Container" table, in the "Visual Exam Comment" field (see Figure 19).

4.2.51 Verify that the physical form of the waste is consistent with the IDC, WMC, *Summary Category Group* (SCG; see def.), and waste stream description displayed.

NOTE: *The responsible manager entered on an NCR for an IDC, WMC, or approved waste stream number change is the AK manager. An AK evaluation is required for any suggested IDC, WMC, or approved waste stream changes.*

4.2.52 **IF** the IDC, WMC, summary category and waste stream description is **NOT** correct in accordance with RPT-TRUW-05, Waste Matrix Code Reference Manual, or RPT-TRUW-12, AMWTP Waste Stream Designations, and/or Form-1900 (for offsite waste),
THEN contact the SS for evaluation and guidance in performing the following:

4.2.52.1 Enter the suggested IDC.

4.2.52.2 Enter the reason for the suggested change.

4.2.52.3 Enter any applicable comments in the "Visual Exam Comment" field.

4.2.52.4 Ensure the assignment of the NCR is to the AK manager.

4.2.53 Verify that the original waste is placed back into the source container.

4.2.53.1 **IF** insufficient space exists for all of the original waste in the source container,
THEN verify that any remaining waste is prepared in accordance with INST-OI-24 for removal.

4.2.54 Enter any of the following comments about the VE in the "Visual Exam Comment" field as applicable:

A. Non-conformances

B. Abnormal conditions

C. Processing information

D. Guidance from VEE or SS

E. Reconciliation issues

F. Equipment issues

G. Any information that could affect data quality

H. Historical data from the drum and drum lid such as:

1. Control number
2. TID number
3. Dates and weight, if available.

4.2.55 Verify that all waste is examined and data entered/recorded with the description, weight, and the assignment to the appropriate waste parameters.

(HWMA/RCRA Permit)

4.2.56 Verify that the physical form of the waste is consistent with the IDC, WMC, SCG, and waste stream description displayed in WTS, as applicable.

4.3 Visual Examination of Legacy Waste Containers

NOTE 1: *A VEE will provide direction to assist in the VE. Any guidance or direction from the VEE related to the drum examination must be documented in the "Visual Exam Comment" field, and on the A/V record, as applicable.*

(MP-TRUW-8.1; MP-TRUW-8.2)

NOTE 2: *The VEs concur with the assignment of the characterization data as evidenced by electronic signature on the record.*

NOTE 3: *VE of legacy waste containers is used to record the initial configuration of the waste package for use in confirming or supplementing AK data for characterization of the waste.*

4.3.1 Review the available AK for the waste with the VEE, including any applicable AK resolutions.

4.3.2 Access the of Legacy Waste screen (see Figure 20).

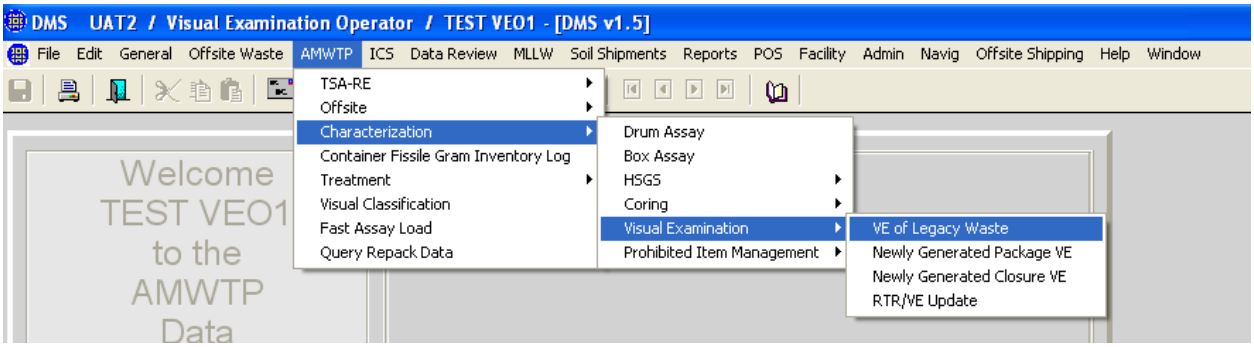

Figure 20. Characterization VE Path.

4.3.3 Enter the container ID number in the Container ID field **AND** press F8 to populate the data fields (see Figure 21).

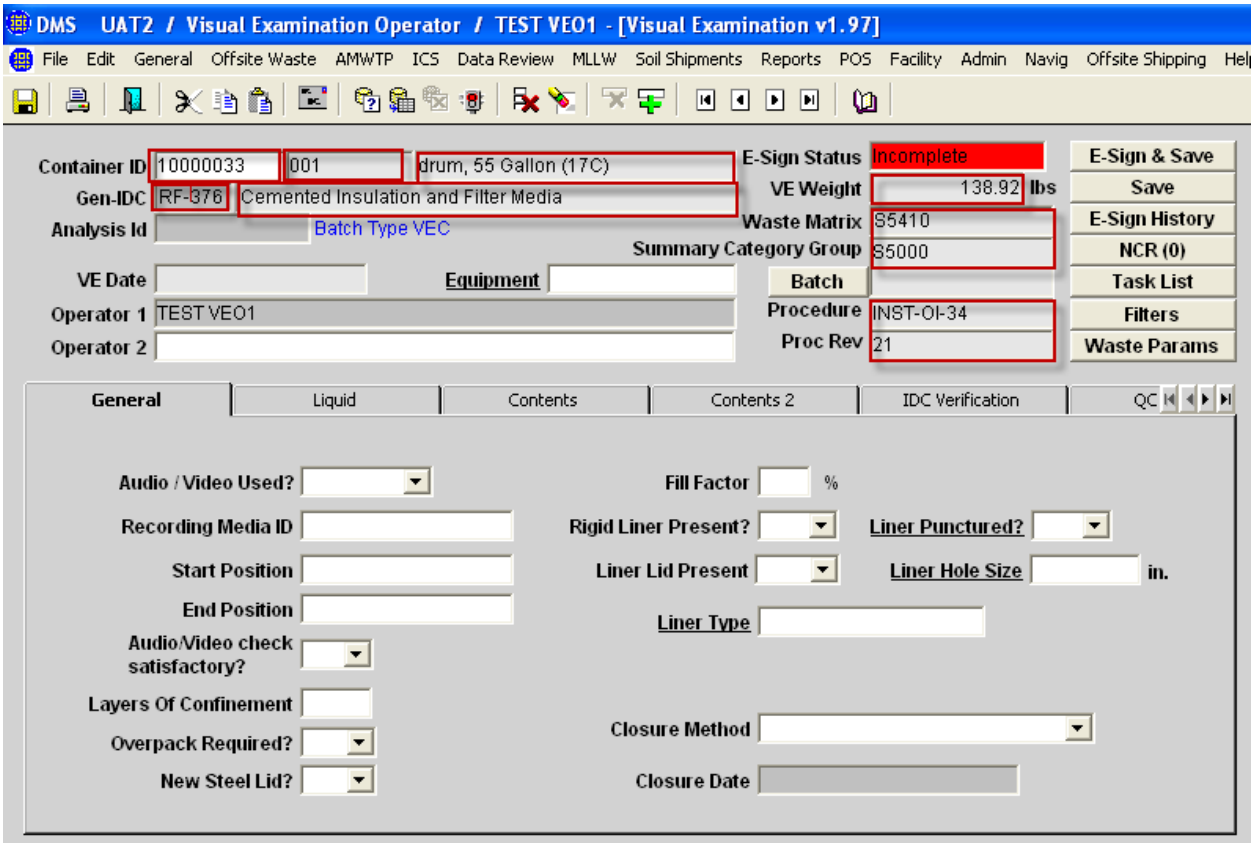

Figure 21. Characterization VE of Legacy Waste Main Screen.

4.3.4 Verify the WMC displayed is consistent with RPT-TRUW-05, and RPT-TRUW-12 (see Figure 22) and/or Form-1900 (for offsite waste).

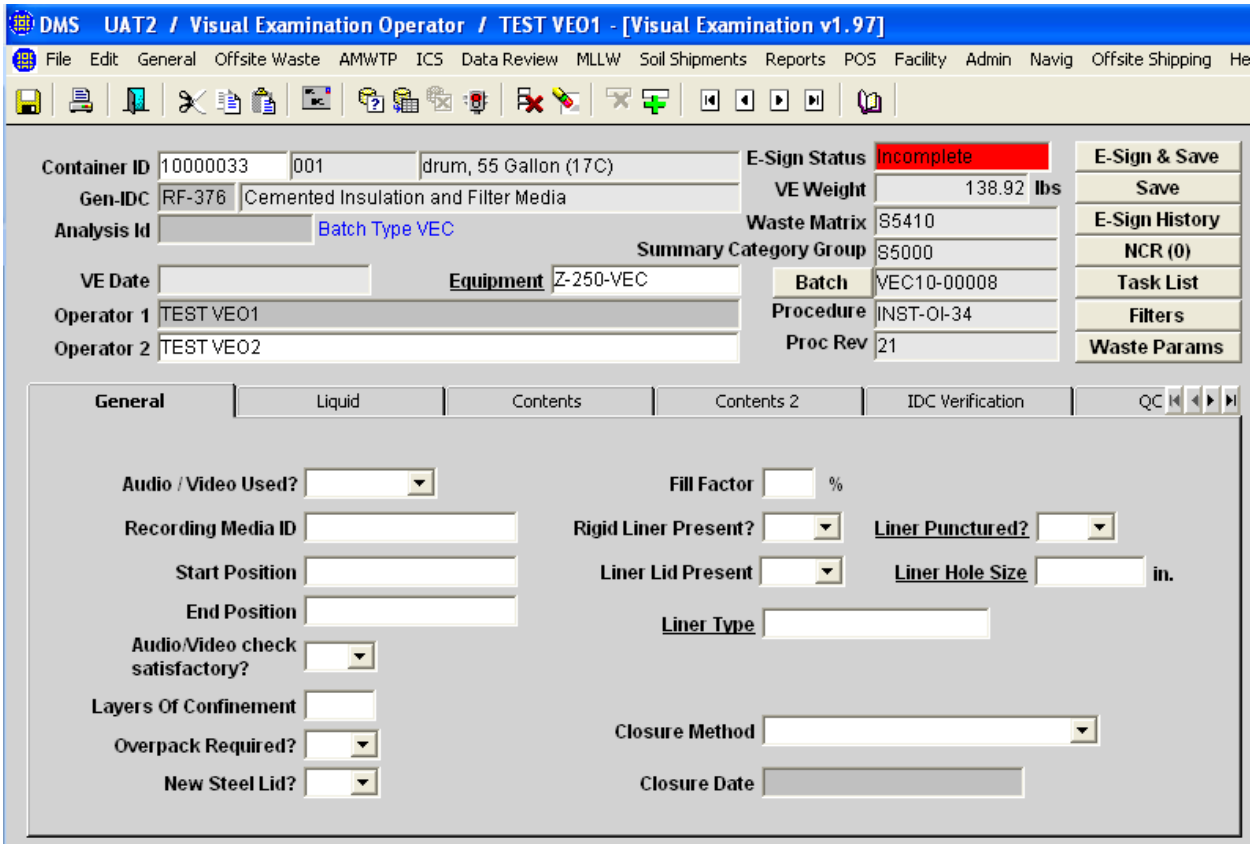

Figure 22. Characterization VE of Legacy Waste Screen Initial Completion – Example.

4.3.4.1 **IF** the WMC displayed is **NOT** consistent with RPT-TRUW-05 and RPT-TRUW-12, and/or Form-1900 (for offsite waste),
THEN enter the inconsistency in the "Visual Exam Comment" field,
AND proceed with the examination.

4.3.5 Select the Equipment ID field and press the F9 key**.**

4.3.5.1 Select "Z-250-VEC."

4.3.6 Observe that the batch number automatically populates the "Batch" field.

4.3.7 **WHEN** WTS displays "Do you need to change the Procedure for this analysis?",
THEN select "Yes" or "No," as appropriate.

4.3.7.1 **IF** the correct response is "Yes,"
THEN enter the correct procedure and revision in the "IDC Verification" tab "Visual Exam Comment" field.

4.3.8 Ensure that the name of the VE performing this examination is displayed.

4.3.9 Enter the function and name of the individual verifying the record as follows:

4.3.9.1 Select the "Operator 2" field.

4.3.9.2 Press the F9 key.

4.3.9.3 Select name of the verifier.

NOTE: *The selection of "NO" in "Audio/Video Used?" field will render the remainder of the A/V fields inactive when the "Verify" field displays a VEO role.*

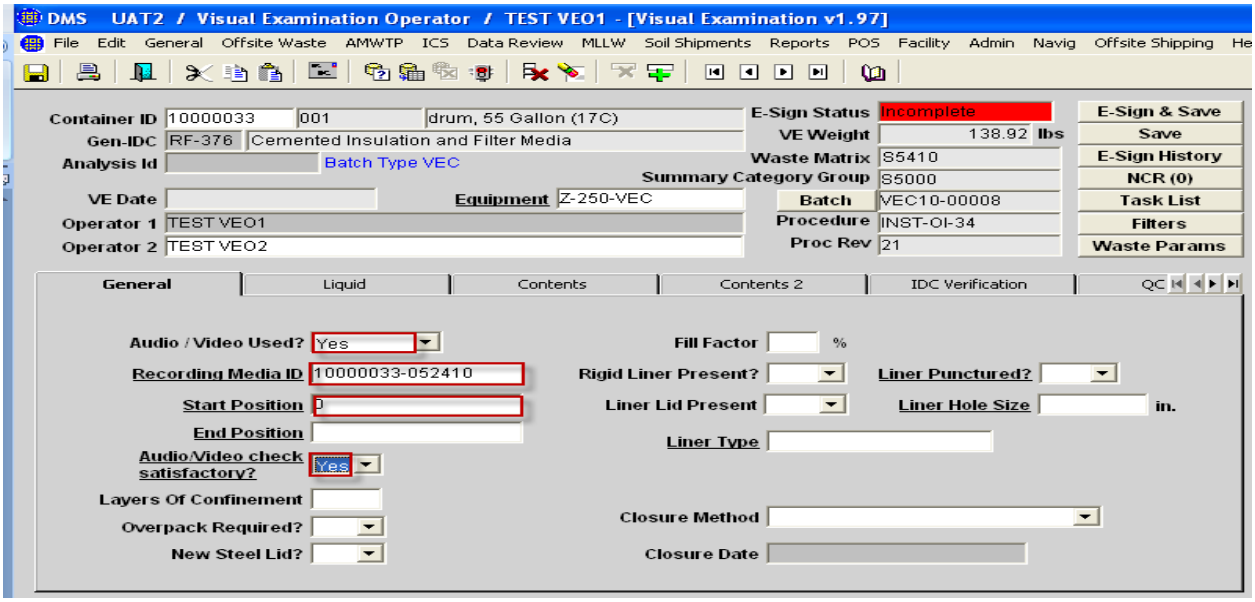

Figure 23. Characterization VE of Legacy Waste General Tab – Color indicates initial A/V fields to complete.

4.3.10 Select "Yes" or "No," as applicable, in the "Audio/Video Used?" field (see Figure 23).

4.3.10.1 **IF** A/V equipment is **NOT** used,
THEN GO TO Step 4.3.12.

4.3.11 Operate A/V equipment (when used).

4.3.11.1 Ensure VE recorded on audio/video media meets the following requirements:

- The audio/video media shall record the waste packaging event for the container such that all waste items placed into the container are recorded in sufficient detail, and contain an inventory of waste items in sufficient detail that another trained visual examiner can identify the associated waste material parameters.
- The audio portion of the recording media shall capture the waste container identification number.
- The personnel loading the waste container shall be identified on the audio/video media or on packaging records traceable to the loading of the waste container.
- The date of loading of the waste container will be recorded on the audio/video media or on packaging records traceable to the loading of the waste container.

(MP-TRUW-8.2)

4.3.11.2 Obtain a new recording medium.

4.3.11.3 Label the A/V recording medium with the batch number and waste container number.

4.3.11.4 Enter the A/V recording medium number (container number-mmddyy) in the "Recording Median ID" field (see Figure 23).

4.3.11.5 Enter the start position in the "Start Position" field (normally "0") (see Figure 23).

4.3.11.6 Perform an A/V test before beginning the examination by performing the following:

4.3.11.6.1 Start the recording function on the A/V recorder to test audio and video input to the unit.

4.3.11.6.2 Test all of the A/V channels that will be used.

4.3.11.6.3 Announce the test label number on the A/V recording.

4.3.11.6.4 Stop the recording and rewind to the "Start" position.

4.3.11.6.5 Replay the recording to determine that both the audio and video were properly recorded during the test.

4.3.11.7 **IF** the A/V test is **NOT** satisfactory,
THEN enter "No" in the "Audio/Video check satisfactory" field,
AND contact the SS for guidance.

4.3.11.8 **WHEN** the A/V test has been satisfactorily completed,
THEN perform the following:

4.3.11.8.1 Ensure the A/V test is included on the recording as part of the Visual Examination Record.

4.3.11.8.2 Select "Yes" in the "Audio/Video check satisfactory" field (see Figure 23).

4.3.11.9 Forward the recording medium past the conclusion of the A/V test.

4.3.11.10 Begin the A/V recording of the VE.

(HWMA/RCRA Permit)

4.3.11.11 Record the names of the VE(s) performing the examination and the VEE on the A/V record.

4.3.11.12 Record the container ID number and the batch number on the A/V record.

4.3.11.13 Record that the A/V test was satisfactory on the A/V recording, and in WTS.

4.3.11.14 Enter the filter data is captured as follows:

A. Filters removed during the course of examination are included in the videos and audio record

B. The filter data is entered in the "Visual Exam Comment" field

C. The Filter "Container Filters" screen is updated.

(MP-TRUW-8.1; MP-TRUW-8.2; CCP-PO-003)

4.3.12 **GO TO** Section 4.2 and perform the examination, as applicable to VE of legacy waste containers**;**
THEN RETURN TO Step 4.3.13.

4.3.13 Verify the data and drum loading are correct.

4.3.14 Summarize the WTS data on the A/V record (when used).

4.3.15 Stop the A/V recording
AND enter the stop position, as applicable (see Figure 23).

4.3.16 **IF** there are any discrepancies,
THEN contact the SS before proceeding.

4.3.17 Enter overpack required, as applicable.

4.3.18 Enter that a new steel lid was applied to drum, as applicable.

4.3.19 Install the drum lid.

4.3.19.1 Ensure the "Container Filters" screen is updated.

NOTE: *WTS will not allow e-signature approval of the data without all of the required data fields being completed.*

4.3.20 1st Operator (data generator): E-sign the WTS record for approval of the data and drum loading.

4.3.21 2nd Operator (data verifier): E-sign the WTS record for approval of the data and drum loading.

4.3.22 **IF** a prohibited item is a treatable liquid,
THEN GO TO the applicable operating instruction for treating liquid;
THEN RETURN TO Step 4.3.23.

4.3.23 **GO TO** Section 4.6 and update the container record for treated, added, or removed items, as applicable;
THEN RETURN TO Step 4.3.24.

4.3.24 Close the batch by performing the following:

4.3.24.1 Select the "Batch" button on the "Visual Examination" screen (see Figure 23).

4.3.24.2 Select the "Close" button on the "Batch Details" screen.

4.3.24.3 E-sign and save the record.

4.3.25 Copy the recording medium to A/V tape, as applicable.

4.3.26 Remove the A/V recording for transmittal to Level 1 Validation personnel, as applicable.

4.3.27 Verify the task list for each container is updated, complete, and correct.

4.3.28 **IF** the disposition or the process code is **NOT** correct,
THEN request the SS or VEE to correct the task list accordingly.

4.3.29 **IF** there are PCBs in the drum,
THEN perform the following:

4.3.29.1 Label the drum for PCBs.

4.3.29.2 Contact the SS.

4.3.29.3 SS/VEE: Set the Process Code to DS.

4.4 Visual Examination of Newly Generated Waste Packages

NOTE 1: *The packages of waste are placed in the satellite accumulation area (SAA) or permitted storage drum (PSD) where waste is being accumulated. When the waste container is full or ready to be processed, then the drum inventory data is summarized to the SAA or PSD drum during NGW VE closure.*

(HWMA/RCRA Permit)

NOTE 2: *Prohibited and nonconforming items (other than treatable liquid as indicated) are segregated from the waste stream for storage as NGW, and are placed in containers designated for the collection of prohibited items.*

(HWMA/RCRA Permit)

NOTE 3: *A VEE may provide direction to assist in the VE. Any guidance or direction from the VEE related to the drum examination must be documented in the "Visual Exam Comment" field.*

(MP-TRUW-8.1; MP-TRUW-8.2)

4.4.1 Verify the NGW is compatible with the waste in the SAA drum or PSD in accordance with Exhibit 14.

(HWMA/RCRA Permit)

4.4.2 Verify that a package ID number label is affixed to the outer packaging of the waste item.

4.4.3 Access the AMWTP, Characterization, Visual Examination, "Newly Generated Package VE" screens (see Figure 24).

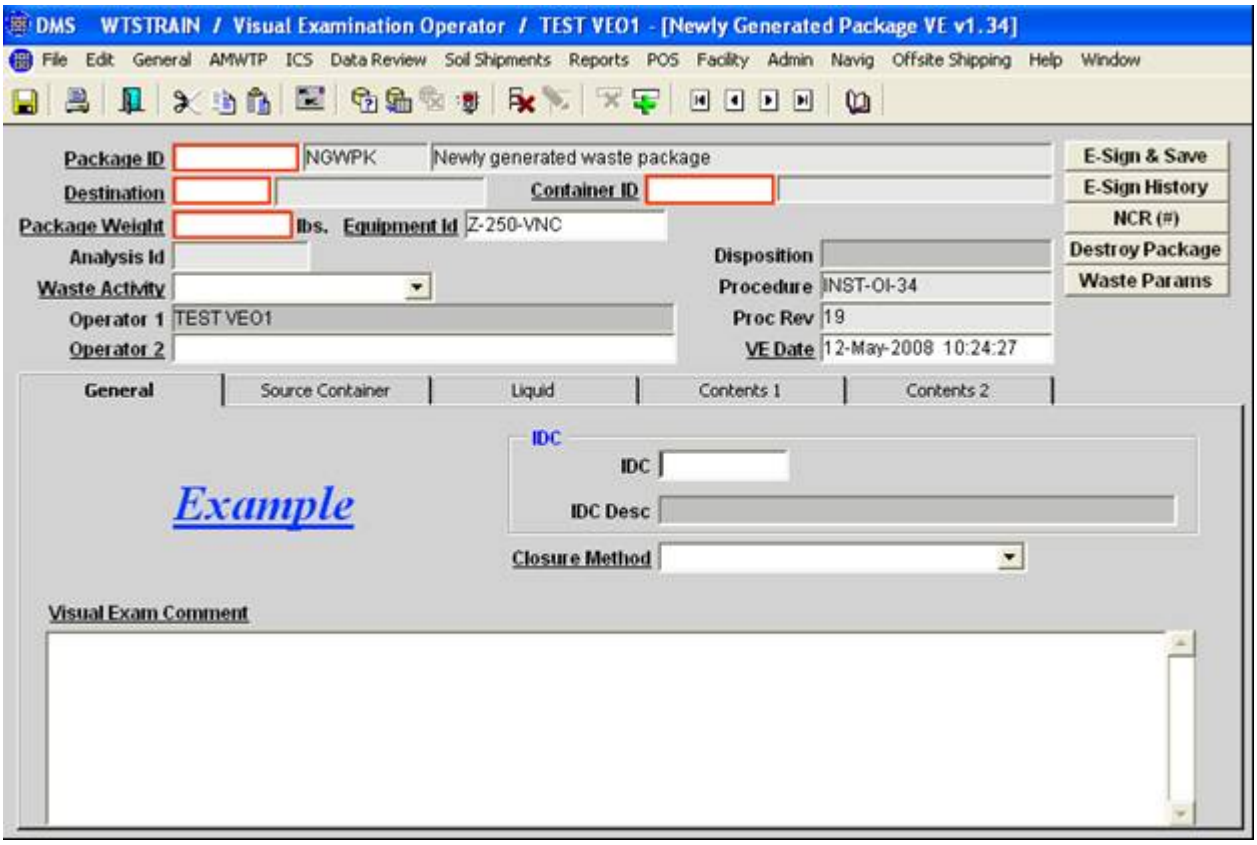

Figure 24. Characterization VE NGW Package General Tab.

4.4.4 Enter the package ID number in the "Package ID" field and press the Tab key.

4.4.5 Select the "Destination" field and press the F9 key.

4.4.5.1 Select the appropriate entry.

NOTE: *The following entry pertains to the destination container for the waste item. Source container information is contained in the Source Container tab.*

4.4.6 Select the destination "Container ID" field and press the F9 key.

4.4.6.1 Select the appropriate destination container.

4.4.7 Select the "Package Weight" field **AND** enter the weight.

NOTE: *Selection of "Other (describe)" in the "Waste Activity" field will create a pop-up field to the right of the entry.*

4.4.8 Select the "Waste Activity" field
AND select the appropriate activity.

4.4.8.1 **IF** the appropriate selection is "Other (describe),
THEN enter a brief description in the newly created "Describe" field.

4.4.9 Ensure that the name of "Operator 1" (the first VE is displayed) (see Figure 24).

4.4.10 Select the "Operator 2" field and press the F9 key.

4.4.10.1 Select the name of the second VE.

4.4.11 Select the "Equipment ID" and press the F9 key.

4.4.11.1 Select "Z-250-VNC" as the equipment ID.

4.4.12 Select the "IDC" field and press the F9 key.

4.4.12.1 Select the appropriate IDC for the waste item.

4.4.13 Ensure the following data is entered or displayed, as applicable (see Figure 25):

- Package ID number
- Destination
- Container ID number (destination)
- Package Weight
- Equipment ID as "Z-250-VNC"
- Waste activity
- Correct procedure and revision.

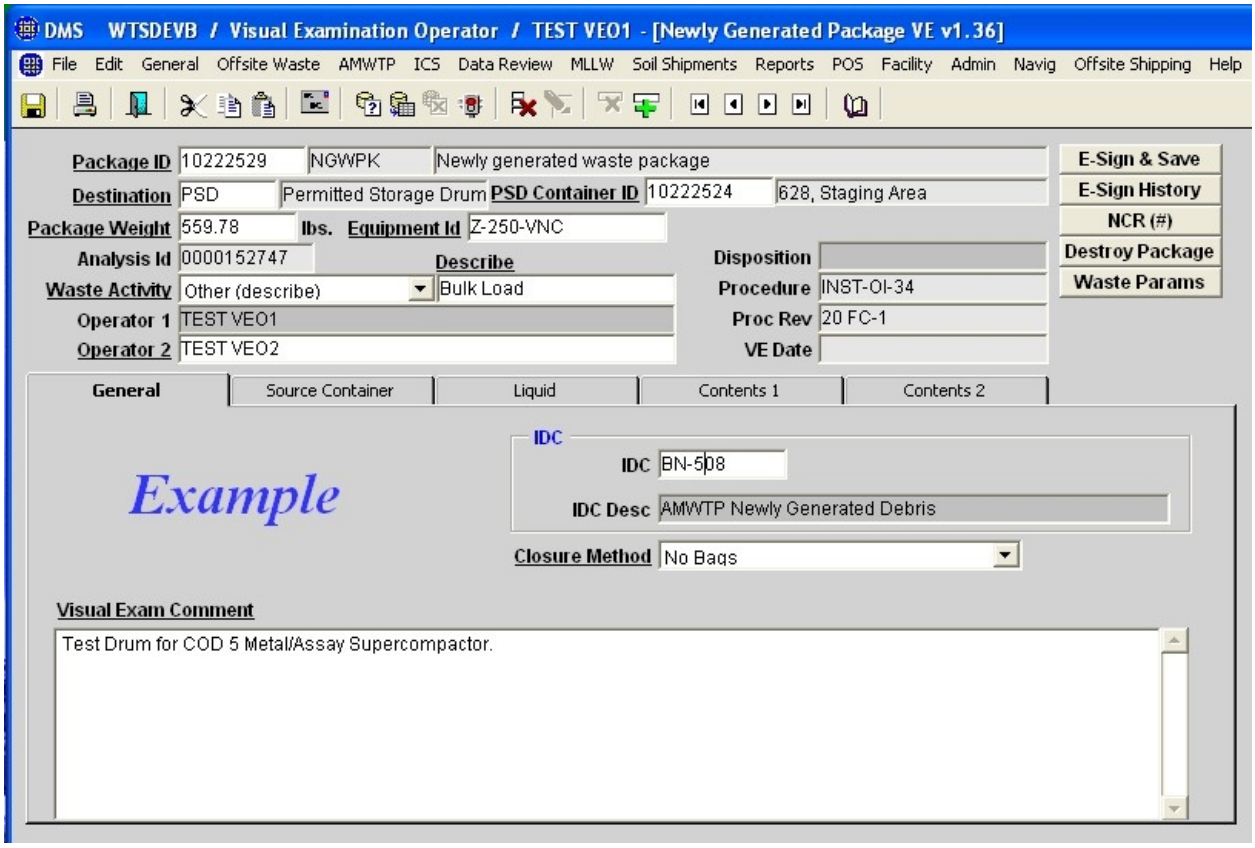

Figure 25. Characterization VE NGW Package Screen – Example.

NOTE: *The "Source Squeezants" button is not used in this procedure.*

4.4.14 Select the "Source Container" tab, and select a response, "Yes" or "No" (see Figure 26) as applicable in the "Is there a source container?" field observing the following guideline:

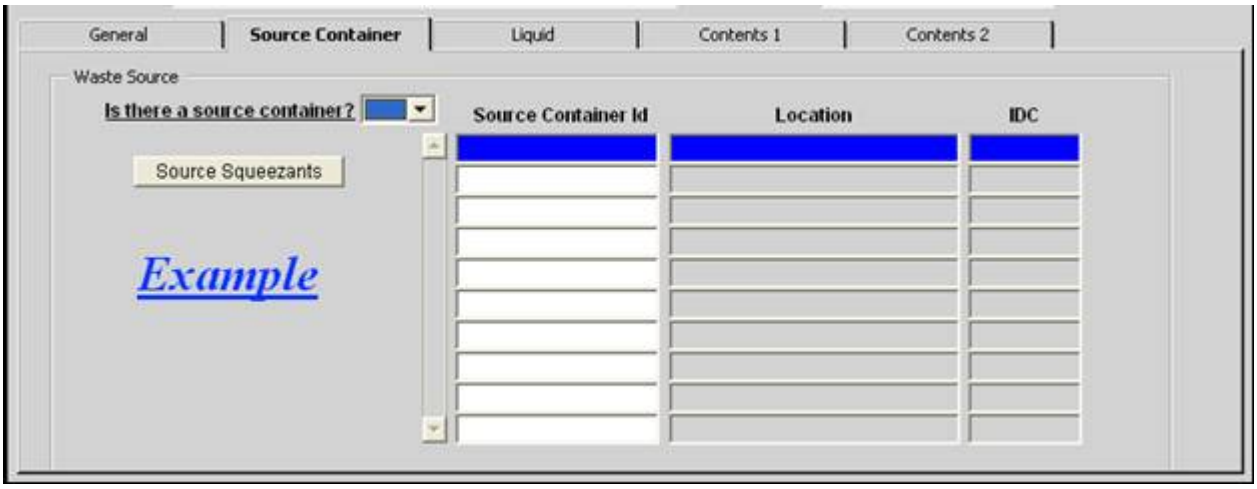

Figure 26. Characterization VE NGW Pkg., Source Container Tab.

NOTE: *The "Visual Exam Comment" field may be in the "General" or "IDC Verification" tab.*

4.4.14.1 **IF** the source of the waste was **NOT** a drum or box, **THEN** perform the following:

4.4.14.1.1 Select "No" in the "Source Container" field.

4.4.14.1.2 Enter the source of the waste in "General" tab "Visual Exam Comment" field.

4.4.14.2 **IF** the source of the waste was a drum or box, **THEN** select the first available field in the "Source container Id" block and perform **ONE** of the following:

4.4.14.2.1 Press the F9 key and select the correct container ID number.

OR

4.4.14.2.2 Enter the container ID number and press the Enter key.

4.4.14.3 Observe that the correct location and IDC are displayed for the container.

4.4.15 **GO TO** Section 4.2 and perform the applicable steps of the examination, entering the data in the appropriate tabs and fields in the "Newly Generated Package" screen,
THEN RETURN TO Step 4.4.16.

4.4.16 Select the "General" Tab "Closure Method" field and the correct outer closure method for the waste item (see Figure 26).

4.4.17 Enter any additional comments about the waste item in the "Visual Exam Comment" field.

4.4.18 Review the data for completeness and accuracy.

4.4.19 **IF** there are any discrepancies,
THEN contact the SS for guidance.

4.4.20 1st Operator (data generator): E-sign the WTS record for approval of the data and drum loading.

4.4.21 2nd Operator (data verifier): E-sign the WTS record for approval of the data and drum loading.

4.4.22 Verify the VE date populates after both operators E-sign the data.

4.4.23 **IF** the drum is full or ready to be processed,
THEN GO TO Section 4.5.

4.5 Visual Examination of Newly Generated Waste Closure

NOTE 1: *This section is performed concurrently with INST-OI-24 for the packaging of NGW.*

NOTE 2: *WTS summarizes the data for individual packages that were already characterized per Section 4.4 of this instruction and assigns the individual packages to the drum.*

4.5.1 Access the AMWTP, Characterization, Newly Generated Closure VE screen from the WTS menu (see Figure 27).

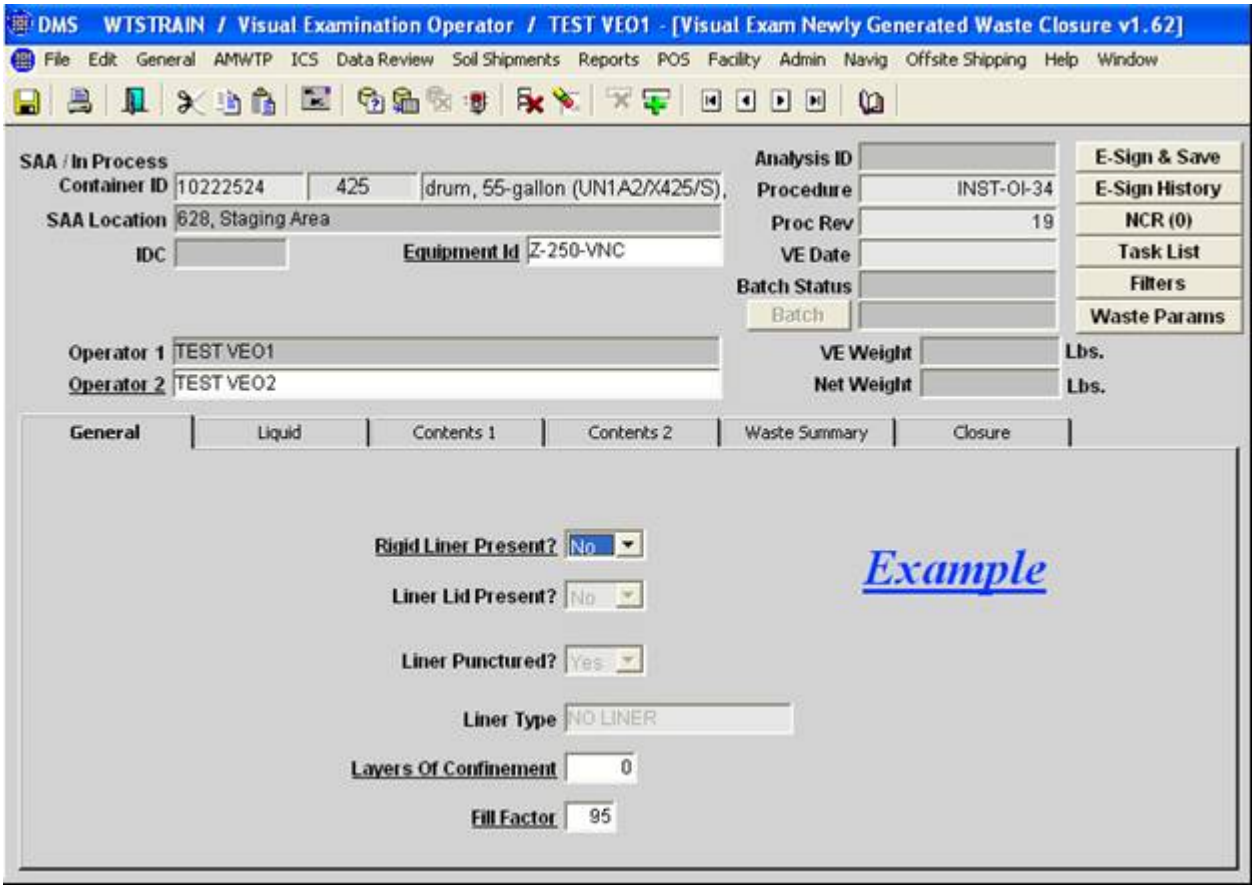

Figure 27. Characterization Newly Generated Closure VE, General Tab.

4.5.2 Select the "SAA/In Process Container ID" field
AND perform **ONE** of the following tasks:

4.5.2.1 Press the F9 key and select the appropriate container number.

OR

4.5.2.2 Enter the container ID number in the field.

4.5.3 Press F8 to populate the data on the screen.

4.5.4 Verify that the correct procedure and revision are displayed.

4.5.4.1 **IF** the correct procedure and revision are **NOT** displayed, **THEN** perform the following:

4.5.4.1.1 Enter a comment in the "General" tab "Visual Exam Comment Field" that the examination was performed to the current procedure and revision
AND provide the correct data.

4.5.4.1.2 Contact the SS to update the procedure and revision in WTS.

4.5.5 Select the "Equipment ID" and press the F9 key.

4.5.5.1 Select "Z-250-VNC."

4.5.6 Ensure that the name of "Operator 1" (the first VE is displayed).

4.5.7 Select the "Operator 2" field and press the F9 key.

4.5.7.1 Select the name of the second VE.

4.5.8 Select the "General" tab, as applicable.

NOTE: *A "Rigid Liner Present" response of "No" results in the corresponding liner fields not being required data entry fields.*

4.5.9 Select the "Rigid Liner Present?" field and enter the appropriate response "Yes" or "No" as follows:

4.5.9.1 **IF** the response to the "Rigid Liner Present" question is "No,"
THEN select "No" and **GO TO** Step 4.5.10.

4.5.9.2 **IF** the response to "Rigid Liner Present" is "Yes,"
THEN perform the following:

NOTE: *The liner has a minimum 0.3-in. diameter opening for it to be considered vented.*

4.5.9.2.1 Verify the liner is vented to greater than 0.3 inches in diameter.

4.5.9.2.2 Select "Yes" in "Liner Punctured" field.

4.5.9.2.3 Select the appropriate response for Liner Lid Present.

4.5.9.2.4 Select the appropriate liner type, as listed in Exhibit 12, as applicable, by placing the cursor in the "Liner Type" field, pressing the F9 key, and selecting the appropriate liner type.

4.5.10 Select the "Layers of Confinement" field and enter the number of layers of confinement for the waste container.

(CCP-PO-003)

4.5.11 Select the "Fill factor" field and enter the percent–full value of the container in accordance with Exhibit 3, Fill Factor.

4.5.12 Ensure all displayed information for the container is complete.

4.5.13 Select the “Closure” tab.

4.5.14 Select the “IDC OK’ field and select “Yes” or “No,” as applicable.

4.5.14.1 **IF** the IDC is **NOT** correct,
THEN select “No” in the “IDC OK” field.

4.5.14.2 Enter the “recommended IDC” in the IDC Recommended field.

4.5.14.3 Enter comments in the “IDC Change Reason” field.

4.5.15 Select the “Closure Method” field and select the correct outer layer closure method.

4.5.16 Select the “Waste Summary” tab and review the waste parameter data in the “Remaining Contents” table.

4.5.17 Enter the remaining waste in the appropriate waste parameter by weight percent on the “Remaining Contents of Container” table.

4.5.17.1 Select Save.

4.5.18 Enter a description of the waste that was entered in the “Waste Parameter” tab under the “Visual Exam Comment” field.

4.5.19 Verify the container is closed in accordance with INST-OI-24.

4.5.20 Verify the appropriate filter model(s) are entered for the waste container in the “Container Filters” screen and that the screen is updated.

4.5.21 Enter any comments about the VE.

NOTE: *Non-prohibited PCBs will display a process code of DS for direct ship.*

4.5.22 Review the data and container loading for completeness and accuracy.

4.5.23 **IF** there are any discrepancies,
THEN contact the SS for guidance.

4.5.24 1st Operator (data generator): E-sign the WTS record for approval of the data and drum loading.

4.5.25 2nd Operator (data verifier): E-sign the WTS record for approval of the data and drum loading.

4.5.26 Verify that the task list for the waste container indicates the correct disposition and process code to ensure proper processing of the waste container.

4.5.27 **IF** the disposition or the process code is **NOT** correct,
THEN contact the SS or VEE for further guidance.

4.5.28 Close the batch.

4.6 RTR/VE Update (Supplemental Analysis to RTR or VE Batch)

NOTE 1: *The RVU can be used to update the final waste container configuration after processing of the drum such as coring, VE of Legacy Waste, liquid absorption operations, and removal of prohibited items. The RVU generates an amended analysis that is linked to the original* VE batch data report *(see def.) RTR or VE, as applicable, for the waste container. This amended VE analysis is a supplement to the original batch data report for the waste container and is validated as part of the original batch.*

NOTE 2: *If available, the recording is reviewed for the packaging configuration of the waste container and the location and nature of a nonconformance.*

4.6.1 Access TrackWise to review the corrective actions for the waste container as documented in the NCR, as applicable.

4.6.1.1 Review open NCRs in TrackWise by performing the following:

4.6.1.1.1 Conduct an NCR Quick Search from the production work station by selecting the quality assurance (QA) container quick search link.

NOTE: *Multiple containers may be entered in a single query; however, a "hard return" after each container number is necessary to complete the query.*

4.6.1.1.2 Enter the container identification number followed by a "Hard Return" and select "Submit Query" and view the results on the screen.

4.6.1.1.3 **IF** an open NCR exists,
THEN proceed at the direction of the SS.

4.6.2 Review the A/V record (and/or RTR WTS records) for the container, as applicable.

4.6.3 Verify the packaging configuration of the waste container to determine where to process the waste container, as applicable.

4.6.4 Access the task list to verify the container disposition, as applicable.

4.6.5 Access the AMWTP, Characterization, Visual Examination, "RTR/VE Update" menu item (see Figure 28).

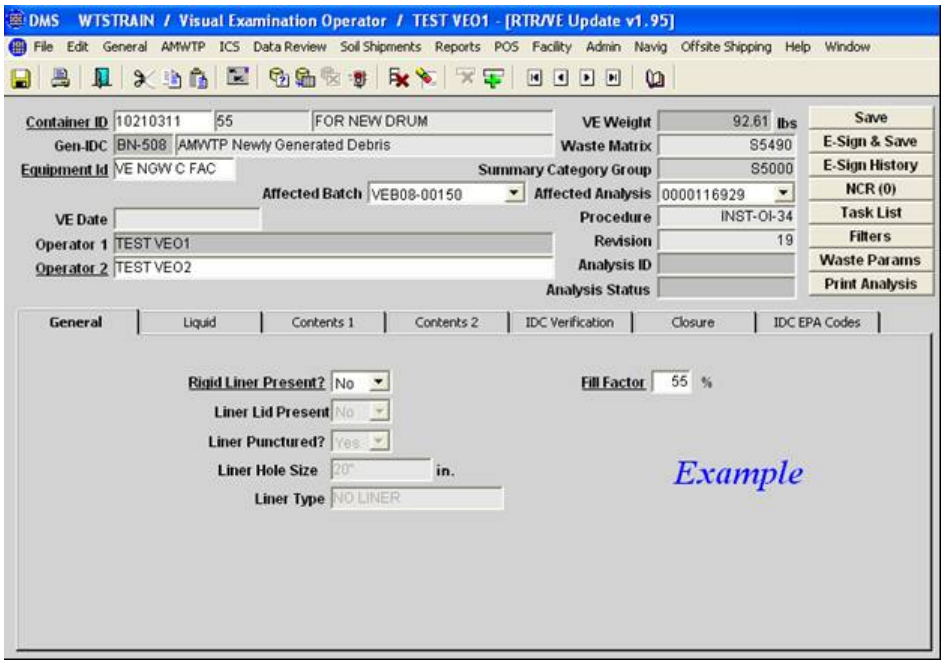

Figure 28. Characterization RVU Screen – Example.

4.6.6 Enter the waste container number for update, and press F8 to populate the data.

NOTE 1: *WTS records for which no supplemental analysis has been performed will not display the "View/Update" and "New" pop-up selection options.*

NOTE 2: *The View/Update selection allows the VE to rework the analysis and saves as the same analysis. In the new analysis mode, the RVU is saved as a new analysis. The "New" selection creates a new supplemental analysis to the record.*

4.6.7 Select "View/Update" or "New Analysis" to identify the RVU analysis type, as appropriate.

4.6.8 Select the "Equipment ID" field and press the F9 key.

4.6.8.1 Select "VE NGW C FAC."

NOTE 1: *The correct affected batch should be documented on an NCR, as applicable.*

NOTE 2: *The correct affected batch and affected analysis is normally the last valid VE, RTR, or RVU performed on the container prior to the RVU.*

4.6.9 Select the correct affected batch and affected analysis identified, as applicable.

NOTE: *The RTR/VE update screen is not used if there is no analysis to update, as listed in the record.*

4.6.10 **IF** there is no affected batch or affected analysis listed,
THEN STOP work
AND contact the SS.

4.6.10.1 Proceed only when directed by the SS.

4.6.11 Observe the gross weight from the affected analysis.

4.6.12 Ensure the name of the "Operator 1" (first VE) is correct.

4.6.13 Select the name of "Operator 2" (second VE).

4.6.14 Select "Yes" or "No" in the "Rigid Liner Present?" field, as appropriate.

4.6.15 **IF** the selection is "No,"
THEN observe the following fields are grayed-out (non-editable):

- "Liner Lid Present"
- "Liner Punctured?"
- "Liner Hole Size"
- "Liner Type."

NOTE 1: *A selection of "No" in the Liner Lid Present" field will result in the "Liner Punctured?" field displaying a default value of "Yes" and the "Liner Hole Size" field displaying a default value of "20."*

NOTE 2: *The liner vent hole must be a minimum of 20 inches to meet the requirement for "No Liner Lid Present."*

4.6.16 Select "Yes" or "No" in the "Liner Lid Present" field, as appropriate.

4.6.17 **IF** the liner is **NOT** punctured,
THEN perform the following:

4.6.17.1 Enter "No" in the "Liner Punctured?" field.

4.6.17.2 **STOP** work
AND notify the SS.

4.6.17.3 Proceed as directed by SS.

4.6.18 **IF** the rigid liner lid is punctured,
THEN select "Yes" in the "Liner Punctured?" field, as appropriate.

NOTE: *The insertion of an approved filter at DVS or venting of the liner at (615/DVF) assures the liner is vented with an opening of greater than 0.3 inches based on the design of the filter and drum punch.*

4.6.19 Verify the size of the liner puncture(s) is greater than 0.3 in., as applicable.

4.6.20 Enter the liner hole size in the "Liner Hole Size" field, as appropriate.

4.6.21 Select the appropriate liner type, as listed in Exhibit 12, as applicable, by placing the cursor in the "Liner Type" field and then pressing the F9 key and selecting the appropriate liner type.

4.6.22 Remove the rigid liner lid, if applicable, using the tools provided.

4.6.23 **IF** performing an RVU to remove a prohibited or suspect item or items, **THEN** perform the following:

4.6.23.1 Open the waste packaging to access the item(s).

4.6.23.2 Locate and segregate the item(s) for removal and/or processing, as applicable.

4.6.24 Update the RTR/VE record for the removal or processing of the prohibited or suspect item(s), as applicable.

4.6.24.1 Enter the appropriate negative weight reassignment(s) for the waste removed by performing the following (see Figure 29):

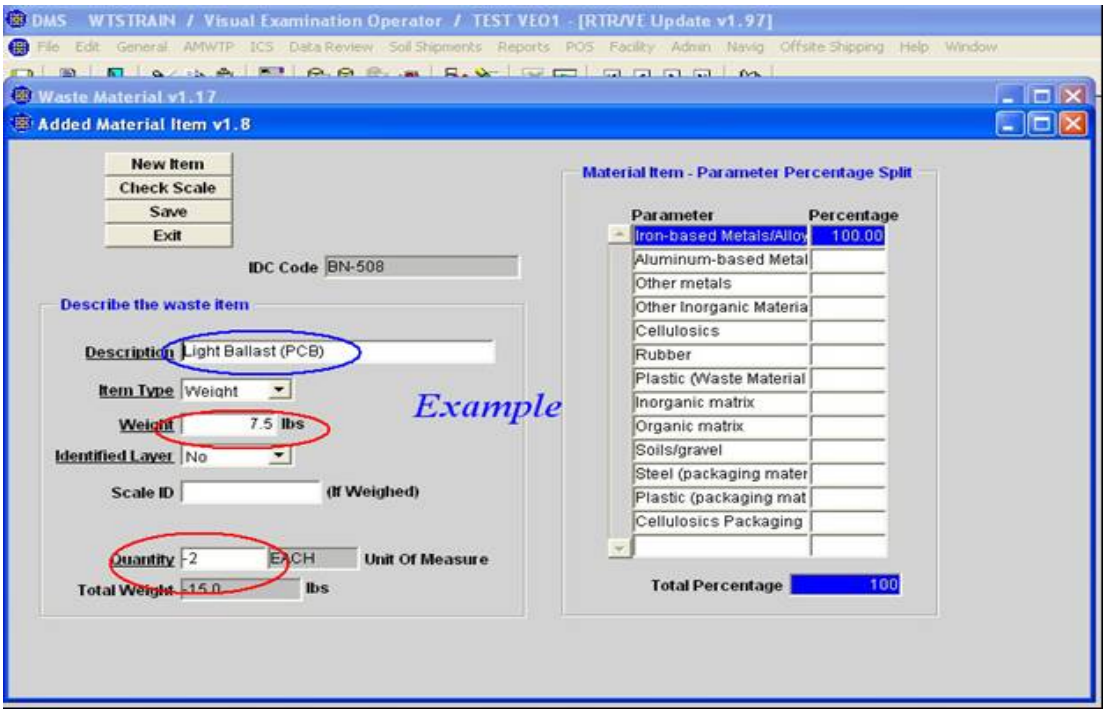

Figure 29. Characterization RVU – Negative Weight Reassignment.

4.6.24.1.1 Select the "Add/Remove Material Items" button in the "Remaining Contents of Container" block.

4.6.24.1.2 Select the "New Item" button.

4.6.24.1.3 Place the cursor in the "Description" field and enter a brief description of the waste item.

4.6.24.1.4 Select the "Item Type" field and select "Weight" or "Volume" as appropriate.

4.6.24.1.5 **IF** entering waste items by weight, **THEN** perform the following:

4.6.24.1.5.1 Enter the weight of the item.

4.6.24.1.5.2 **IF** weighed on a certified scale, **THEN** select the "Scale ID" field, press the F9 key, **AND** select the correct scale.

4.6.24.1.5.3 Select the "Quantity" field and enter the negative quantity.

4.6.24.1.6 **IF** entering item(s) by volume, **THEN** perform the following:

4.6.24.1.6.1 Obtain available reference data.

4.6.24.1.6.2 Enter the weight (per unit volume) from available reference data, or as provided by the VEE.

4.6.24.1.6.3 Select the "Quantity" field and enter the negative number of units.

4.6.24.1.7 Select the "Percentage" field opposite the correct "Parameter" field(s) and enter the appropriate waste parameter(s) by weight percent.

4.6.24.1.8 Enter additional items for removal, as necessary.

4.6.24.1.9 Select the "Save" button.

4.6.24.1.10 Select the "Exit" button.

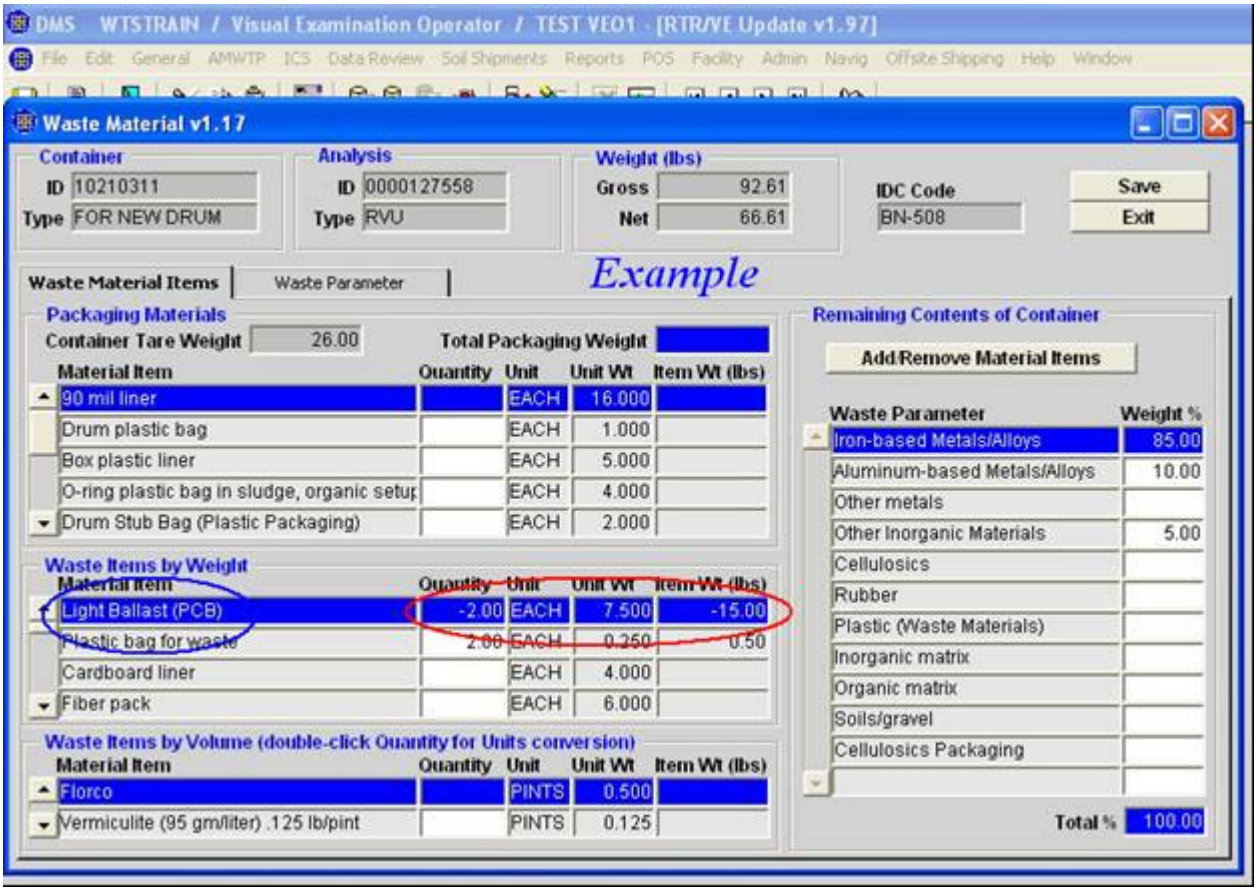

Figure 30. Characterization RVU – Negative Weight Reassignment – 2.

4.6.24.2 Observe that the reassignment has populated the appropriate fields in the "Packaging Materials" tables, as appropriate (see Figure 30).

4.6.24.3 Ensure all assigned entries are correct.

NOTE: *Selecting the "Save" button will adjust the Gross, Net, and VE Weight of the container.*

4.6.24.4 Select the "Save" button.

4.6.24.5 **WHEN** absorbing liquids,
THEN perform the following:

4.6.24.5.1 Enter the addition of approved absorbents.

4.6.24.5.2 Enter the amount of absorbed liquid as inorganic or organic matrix, as applicable.

4.6.24.5.3 **IF** all liquid is not absorbed,
THEN ensure that the amount of liquid remaining is entered/displayed.

4.6.25 Repackage compliant waste back into the original container, as applicable.

4.6.26 Enter the fill factor for the drum in accordance with Exhibit 3.

(MP-TRUW-8.2)

4.6.27 Update the waste container inventory and waste parameters for the processing of the waste container, as applicable.

4.6.28 Enter beryllium and PCBs in the container inventory separately for reporting and tracking purposes, as applicable.

4.6.29 **GO TO** Section 4.2 and perform the applicable steps of the examination **AND** enter the necessary data in the appropriate tabs and fields on the WTS RTR/VE update screens;
THEN RETURN TO Step 4.6.30.

NOTE: *Sealed containers less than 4L are not reported as layers of confinement.*

4.6.30 Update the layers of confinement for the waste container to reflect the final configuration of the waste container.

NOTE: *The closure methods of "twisted and tied" and "zipped and tied" have been approved for AMWTP by WIPP and are entered as "twisted and taped."*

4.6.31 Enter the outer layer closure method(s).

4.6.32 **IF** the package closure method is different than the outer layer,
THEN enter the data in the "Visual Exam Comment" field.

4.6.33 Verify that the IDC, WMC, summary category, and waste stream description of the source container is consistent with RPT-TRUW-05 and RPT-TRUW-12, and/or Form-1900 (for offsite waste).

NOTE: *The responsible manager entered on an NCR for an IDC, WMC, or approved waste stream number change is the AK manager. An AK evaluation is required for any suggested IDC, WMC, or approved waste stream changes.*

4.6.34 **IF** the IDC, WMC, summary category, and waste stream description is **NOT** correct,
THEN contact the SS for evaluation and guidance in performing the following:

4.6.34.1 Enter the suggested IDC, which will update the WMC accordingly.

4.6.34.2 Enter the reason for the suggested change.

4.6.34.3 Enter any applicable comments in the "Visual Exam Comment" field.

4.6.34.4 **IF** the suggested IDC change alters the WMC or the waste stream number,
THEN initiate an NCR, in accordance with MP-Q&SI-5.4,
AND enter a comment in the "Visual Exam Comment" field.

4.6.34.5 **IF** the change in the IDC or WMC alters the approved waste stream number,
THEN ensure that the NCR is updated to reflect the change,
AND enter a comment in the "Visual Exam Comment" field.

4.6.34.6 Ensure the assignment of the NCR is to the AK manager.

(MP-TRUW-8.1; MP-TRUW-8.2)

4.6.35 Ensure the appropriate filter model(s) are entered for the waste container in the "Container Filters" screen and that the screen is updated.

4.6.36 Enter that a new steel lid was applied, as applicable.

NOTE: *When a new overpack container is required, the container is first created in WTS using the instructions in INST-OI-24. However, WTS is NOT used to update the Overpack container once the damaged drum is placed inside.*

4.6.37 **IF** a sling is required to place the drum in an Overpack container **AND** the sling will become part of the waste package, **THEN** perform the following:

4.6.37.1 Select the "Waste Params" button.

4.6.37.2 Select the "Add/Remove Material Items" button in the Remaining Contents of Container block.

4.6.37.3 Select the "New Item" button.

4.6.37.4 Observe the "Describe the waste item" block.

4.6.37.5 Enter the "Description" (nylon sling or D-ring drum sling), as appropriate.

4.6.37.6 Select the "Item Type" and press the F9 key.

4.6.37.7 Select "Packaging."

4.6.37.8 Enter the "Weight" as appropriate.

4.6.37.9 Enter the "Quantity" as "1."

4.6.37.10 **GO TO** the "Material Item – Parameter Percentage Split" block.

4.6.37.11 Enter the percentage of each represented Waste Parameter in the "Percentage" field opposite each "Parameter."

4.6.37.12 Verify that the "Total Percentage" equals "100."

4.6.37.13 Ensure that all entered data in the screen is correct.

4.6.37.14 Select "Save."

4.6.37.15 Return to the "IDC Verification" tab and enter the appropriate data in the "Comment" field.

4.6.38 Select the "Overpack Required" field and select "Yes" or "No," as applicable.

4.6.39 Enter that the waste container was processed in accordance with the applicable NCR in the Comments field of the RVU record, as applicable.

NOTE: *Processing information pertaining to the RCRA/WAP consists of the following:*

- *Treating (absorbing) non-prohibited liquid within allowances*
- *Removal of prohibited items observed during the course of an examination*
- *Introduction or removal of any waste item that may alter the HWNs*
- *Any actions that result in the change of the previously assigned IDCs or WMC or approved waste stream and the corresponding NCR number.*

4.6.40 Enter any comments about the "Visual Exam Comment" field (such as nonconformances, abnormal conditions, processing information, guidance from the SS or VEE).

4.6.41 Review the data and container loading for completeness and accuracy.

4.6.42 **IF** there are any discrepancies,
THEN contact the SS for guidance.

NOTE: *A Yes response to the following query will populate the closure date with the e-signature date. A No response will populate the closure date with the containers original pack date.*

4.6.42.1 Observe the message box "Was the container opened?" **AND** select Yes or No.

4.6.43 1st Operator (data generator): E-sign the WTS record for approval of the data and drum loading.

4.6.44 2nd Operator (data verifier): E-sign the WTS record for approval of the data and drum loading.

4.6.45 Verify that the task list for the container has updated to document the completion of the RVU and the container disposition has updated correctly.

4.6.46 **IF** the task list has **NOT** updated for the reprocessing of the container, **THEN** contact the SS to update the task list accordingly.

4.6.47 Update the NCR, if applicable, to reflect the processing of the waste container.

4.7 Post Job Review

4.7.1 Perform a post-job review in accordance with MP-COPS-9.17, if necessary.

5.0 DEFINITIONS

Container. A unit for characterization subject to radiography or direct visual examination. Typically, this is also identified as the "outermost container" (e.g., 55-, 83/85-, or 100-gallon drum) in the context of radiography or direct visual examination.

Container, internal. Any container within the outermost container being examined using radiography or direct visual examination. Drum liners, liner bags, plastic bags used for contamination control, capillary-type labware (e.g. pipette) and debris not designed to hold liquid at the time of original waste packaging are not internal containers.

Container, small. An internal container being examined using radiography or direct visual examination less than or equal to 2-liters

Item description code. A three-character alphanumeric code that describes each waste form matrix.

Liquid, observable (or liquid). Liquid that can be seen by a trained radiography operator or by a trained individual performing visual examination of the waste. This term can be implemented consistently during characterization regardless of waste type.

Packaging material. Packaging material consists of the drum, 90-mil liner, and the two outermost layers of confinement that are used as liners for the waste container. Additional materials (e.g., plywood spacers) may be considered as packaging materials on a case-by-case basis.

Secondary waste. Waste generated from normal operations and/or closure processes (e.g., personal protective equipment, floor sweepings, rags/wipes from routine maintenance or decontamination activities, and equipment).

Summary category group. Grouping that relates to the final physical form of the waste consisting of three broad categories: (1) S3000 – *Homogeneous Solids* (see def.), (2) S4000 – *Soil/Gravel* (see def.), and (3) *S5000 – Debris Waste* (see def.).

Summary Category S3000 – Homogeneous Solids. Homogeneous solids are defined as solid materials, excluding soil, that do not meet the NMED criteria for classification as debris (20.4.1.800 NMAC (incorporating 40 CFR §268.2[g] and [h]). Included in the series of homogenous solids are inorganic process residues, inorganic sludges, salt waste, and pyrochemical salt waste. Other waste streams are included in this SCG based on the specific waste stream types and final waste form. This SCG is expected to contain toxic metals and spent solvents. This category includes wastes that are at least 50 percent by volume homogenous solids.

Summary Category S4000 – Soils/Gravel. This SCG includes S4000 waste streams that are at least 50 percent by volume soil/gravel. This SCG is expected to contain toxic metals.

Summary Category S5000 – Debris Wastes. This SCG includes heterogeneous waste that is at least 50 percent by volume materials that meet the criteria specified in 20.4.1.800 NMAC (incorporating 40 CFR §268.2 [g]). Debris means solid material exceeding a 2.36 inch (in.) (60 millimeter) particle size that is intended for disposal and that is:

- a manufactured object, or
- plant or animal matter, or
- natural geologic material.

An item smaller than 2.36 inches in size may be considered debris, if the debris is a manufactured object and if it is not in the category of S3000 or S4000 material.

Unknown waste. Waste for which there is no information regarding the generation process, hazardous constituents present, or other information.

VE batch data report. Includes all data pertaining to a group of no more than 20 waste containers. Each VE type has its own batch type and, therefore, its own batch data report.

Vented liner. A liner that is punctured with a minimum 0.3-inch diameter opening in it.

(MP-TRUW-8.2; CCP-PO-003)

Visual examination. (1) A WIPP approved characterization process performed to visually examine the waste to verify compliance with WIPP WAP, WIPP CH-WAC, and CH-TRAMPAC. (2) Constitutes performing a physical examination of the contents to identify and verify physical form and the presence or absence of prohibited items. (3) Requires either: (a) the presence and signature approval of two Operations Technicians qualified in Visual Examination, or (b) an Audio/Video record accompanying the signature of one such qualified individual and one other individual, and a VEE available for support.

Visual examination of newly generated waste. Activity for characterizing NGW at the point of generation using VE. This examination requires two operations technicians qualified in visual examination, with a VEE available for support. This includes visual examination NGW closure.

Visual examination of legacy waste containers. An activity performed to examine and characterize the contents of a waste container for the purpose of confirming or supplementing AK data. This examination requires the presence and disposition concurrence of two individuals qualified as visual examiners, and is recorded on audio/video media. Waste containers that (1) have no AK data to support the characterization of the waste, (2) are identified as an *unknown waste* (see def.), (3) have been examined by RTR (yielding incomplete, inconclusive, or suspect data), or (4) any other waste container determined to be suitable for visual examination, may be characterized using this method.

Waste characterization. The characterization techniques include AK and may also include, as necessary, headspace-gas sampling and analysis, radiography, visual examination, and homogeneous waste sampling and analysis.

Waste matrix code. A system of categorizing wastes with similar physical and chemical properties.

Waste stream. Waste materials that have common physical form, that contain similar hazardous constituents and that are generated from a single process or activity (Hazardous Waste Facility Permit, Attachment C).

Waste Tracking System. System comprised of positioned and hand-held barcode readers and an interactive database designed to track waste items and containers with their associated characterization data from point of retrieval to dispatch to WIPP.

6.0 REFERENCES

(1) 1291-2009-023, Criticality Safety Evaluation, Evaluate the use of Aquaset II

(2) 1291-2009-025, Criticality Safety Evaluation, Microcel-E as an Approved Absorbent

(3) Aquaset IIG as an AbsorbentAMWTP HWMA/RCRA Permit

(4) AMWTP HWMA/RCRA TSA Interim Status Document

(5) CCP-PO-003, CPP Contract-Handled Transuranic Waste Authorized Methods for Payload Control (CCP-CH-TRAMPAC)

(6) Form-1900, AMWTP Offsite Waste Stream Profile

(7) INST-FOI-23, Special Case Waste Operations

(8) INST-OI-16, Drum Coring Operations

(9) INST-OI-24, Packaging Radioactive Waste

(10) INST-OI-68, Drum Treatment Facility Operations

(11) INST-OI-73, Manual Drum Coring Operations

(12) INST-OI-75, Container-in-Container Sampling

(13) LST-LLW-04, LLW/MLLW Prohibited and Restricted Items List

(14) MP-COPS-9.17, Performing Pre-Job Briefings and Post-Job Reviews

(15) MP-DOCS-18.2, Records Management

(16) MP-Q&SI-5.4, Identification of Nonconforming Conditions

(17) MP-TRUW-8.1, Certification Plan for INL Transuranic Waste

(18) MP-TRUW-8.2, Quality Assurance Project Plan

(19) RPT-NFCS-05, Criticality Safety Evaluation for Drum Contents Handling at the AMWTP

(20) RPT-NFCS-08, Criticality Safety Evaluation for AMWTP Retrieval Operations

(21) RPT-NFCS-09, Criticality Safety Analysis Involving the Use of Liquid Sorbents and Immobilizing Agents

(22) RPT-TRUW-05, Waste Matrix Code Reference Manual

(23) RPT-TRUW-12, AMWTP Waste Stream Designations

7.0 RECORDS

Records generated by this procedure are classified in accordance with the table below and dispositioned in accordance with MP-DOCS-18.2, Records Management.

Record Description	Classification
INST-OI-34, Case File	Nonpermanent WIPP/ENV1-J-1/Destroy 75 years after submittal or transfer to CBFO
Copy of electronic Batch Data Report	Lifetime WIPP/ENV1-J-1/Turnover to CBFO at end of project
Data Management System (WTS) records	Lifetime WIPP/ENV1-J-1/Turnover to CBFO at end of project
Visual Examination A/V Record	Lifetime WIPP/ENV1-J-1/Turnover to CBFO at end of project

8.0 EXHIBITS

Exhibit 1 – Waste Material Parameter Descriptions

Exhibit 2 – Parameters and Weights of Commonly Identified Items

Exhibit 3 – Fill Factor

Exhibit 4 – List of TRU Prohibited Items

Exhibit 5 – Volume Conversions for Liquids in 55-gallon Drums

Exhibit 6 – Volumes of Cylinders

Exhibit 7 – Common Liquid Measurements and Conversions

Exhibit 8 – V2 Nominal Density Guidance Table

Exhibit 9 – Volume Conversion Table, Cubic Inches to Pints

Exhibit 10 – Volume Conversion for Partial 55-Gallon Drum (in pints)

Exhibit 11 – Visual Examination Equipment IDs

Exhibit 12 – Description of Liners

Exhibit 13 – Schematic of Criticality Control for Secondary Waste

Exhibit 14 – Waste Incompatibility by IDC

Exhibit 1. Waste Material Parameter Descriptions

Waste Material Parameter	Help Description
Iron-based metals/alloys	Iron and steel alloys in the waste; does not include the waste container materials
Aluminum-based metals/alloys	Aluminum or aluminum-based alloys in the waste material
Other metals	All other metals found in the waste materials
Other inorganic materials	Nonmetallic inorganic waste, including concrete, glass, firebrick, ceramics, sand, and inorganic sorbents
Cellulosics	Materials generally derived from high polymer plant carbohydrates Examples are paper, cardboard, wood, cloth, etc.
Rubber	Natural or man-made elastic latex materials. Examples are surgeons' gloves, leaded rubber gloves, etc.
Plastics (waste materials)	Generally man-made materials often derived from petroleum feedstock. Examples are polyethylene, polyvinyl chloride, etc
Organic matrix	Cemented organic resins, solidified organic liquids, and sludge
Inorganic matrix	Any homogeneous materials consisting of sludge or aqueous-based liquids that are solidified with cement, calcium silicate, or other solidification agents. Examples are wastewater treatment sludge, cemented aqueous liquids, inorganic particulate, etc.
Soil/gravel	Generally consists of naturally-occurring soil/gravel contaminated with inorganic waste materials
Steel (packaging materials)	208-L (55-gal.) drums
Plastics (packaging materials)	90-mil polyethylene drum liner and plastic bags

Exhibit 2. Parameters and Weights of Commonly Identified Items

Item**	Weight	Waste Material Parameter
55-gal drum (17C)	See WTS List of Container Weights	Steel (packaging materials)
90 mil liner (Type I, II, III, IV)	See WTS List of Liner Weights	Plastic (packaging materials)
O-ring plastic bag found in sludge, organic setups, etc.	4 lb	Plastic (packaging materials)
Drum plastic bag	1 lb	Plastic (packaging materials)
Plastic bag for waste	1/4 lb	Plastic (waste materials)
Cardboard liner (graphite mold waste)	4 lb	Cellulosics
Fiber pack	6 lb	Cellulosics
Box fiberboard liner	15 lb	Cellulosics
Box plastic liner	5 lb	Plastic (packaging materials)
Lead brick 2 by 4 by 8 in.	25 lb	Other metals
Leaded rubber glove	5.5 lb	Rubber
Leaded rubber apron	5.25 lb	Rubber
Liquids (water)	8 lb/gal (1 lb/pint)*	
Drum lead-liner: (1/8 in. thick, 28 in. high, by 72 in. long) (0.4 lb/in.^{3})	100 lb	Other metals
Drum lead-liner: (1/16 in. thick, 28-in. high by 72-in. long)	50 lb	Other metals
Vermiculite (95 gm/liter)	0.9 lb/gal (0.125 lb/pint)	Other inorganics
Oil-Dri (404 gm/liter)	3.36 lb/gal (0.42 lb/pint)	Other inorganics
Poly bottles (1 gal)	1 lb	Plastics (waste materials)
Metal can	½ lb	Iron-based metals/alloys
Drum stub bag	2 lb	Plastic (packaging materials)
Cured cement	9 lb/gal (1.125 lb/pint)	Other inorganic materials
Uncured cement	24 lb/gal (3 lb/pint)	Other inorganic materials
Aquaset	9.6 lb/gal (1.21 lb/pint)	Other inorganic materials

* Waste Parameter depends on source of liquid organic or inorganic.
**This is not a complete list.

EXAMPLE

Exhibit 3. Fill Factor

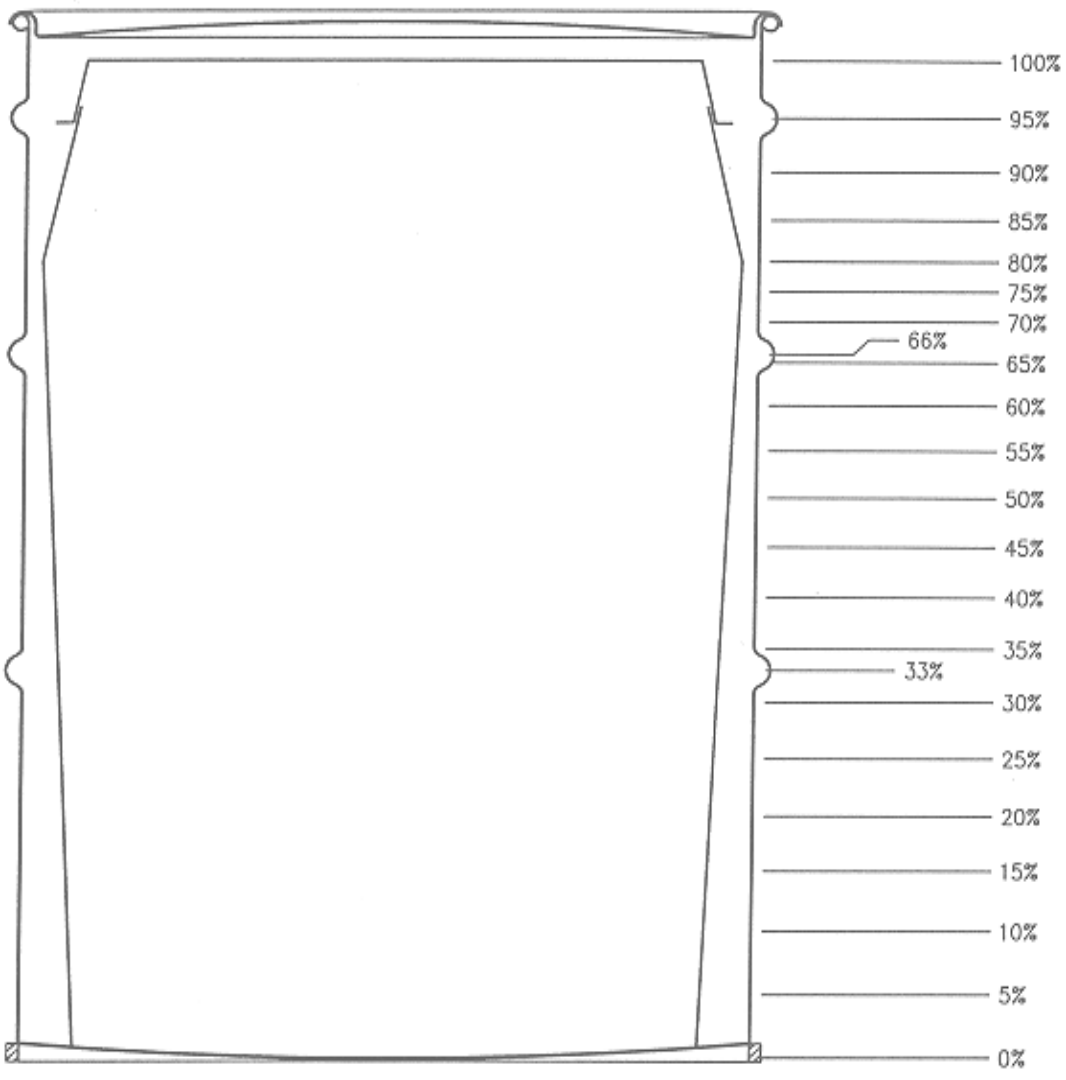

Percentage is to be based on all waste contents (including bags and absorbent) in the drum.

Exhibit 4. List of TRU Prohibited Items

Prohibited Item	Comments
Liquids	Liquid waste is not acceptable at WIPP. Observable liquids containing PCBs are prohibited at WIPP. Liquid in the quantities delineated here is acceptable. Observable liquid shall be no more than 1 percent by volume of the outermost container at the time of radiography or visual examination (VE). Internal containers with more than 60 milliliters or 3 percent by volume observable liquid, whichever is greater, are prohibited. Containers with Hazardous Waste Number U134 assigned shall have no observable liquid. Overpacking the outermost container that was examined during radiography or visual examination or redistributing untreated liquid within the container shall not be used to meet the liquid volume limits.
Compressed Gases	Typically, aerosol cans, gas bottles or cylinders that cannot be verified to be physically vented (e.g., a drilled hole, a removed relief valve).
Corrosives/Reactives/ Ignitables Present	Waste possessing the characteristic of ignitability, corrosivity or reactivity.
Explosives	Examples include ammunition, dynamite, black powder, detonators, nitroglycerine, urea nitrate, picric acid.
Wastes with PCBs not authorized under an EPA PCB waste disposal authorization	Light ballasts and transformers are potential sources of PCBs in much of the waste. PCB items commingled (in direct contact with or displaying evidence of cross-contamination) with other observable liquids are prohibited.
Non-radionuclide Pyrophoric Materials	Examples of non-radionuclide pyrophoric materials or materials/waste that may cause a pyrophoric event are: sodium metal, elemental potassium, organic peroxides, and chlorates. Examples of pyrophoric radionuclides are: metallic plutonium, americium.) No pyrophoric materials or pyrophoric radionuclides exceeding one percent of the waste weight have been identified in any of the AK documentation, content code evaluations, or sampling programs.
Sealed Containers greater than 4 liters	Lids that are screwed into place or taped should be considered sealed. Lids that do not form an “air tight” seal do not need to be considered as a sealed container.
Non-Mixed Hazardous Waste	Hazardous wastes not occurring as co-contaminants with TRU mixed wastes (non-mixed hazardous wastes).
Waste incompatible with backfill, seal and panel closure material, shipping container materials or other wastes	Excessive rust, brittle materials, excessive corrosion, evidence of reaction in the waste are all potential sources for evidence that the waste is not compatible with backfill, packaging, or shipping container.
Sharp or heavy items not blocked or braced	Sharp items that have a reasonable potential to puncture the payload container shall be treated or protected prior to shipment. (The presence of a properly assembled rigid or fiberboard liner is considered as one method of providing protection. Padding, when applicable is also an acceptable method of providing protection.) Heavy items shall be blocked, braced, or suitably packaged to provide puncture protection for the payload containers packaging these objects. A blocking and bracing plan is required prior to packaging for waste items that are heavy enough (greater than or equal to 200 lb) to shift position and cause damage to either the liner or the drum/box itself.

(MP-TRUW-8.1; MP-TRUW-8.2; CCP-PO-003; HWMA/RCRA Permit)

Exhibit 5. Volume Conversions for Liquids in 55-gallon Drums

Volume Conversions for Liquid			
Inches	Gallons	Pints	Pounds
1.0	1.5	12	12
1.5	2.25	18	18
2.0	3.0	24	24
2.5	3.75	30	30
3.0	4.50	36	36
3.5	5.25	42	42
4.0	6.0	48	48
4.5	6.75	54	54
5.0	7.5	60	60
5.5	8.25	66	66
6.0	9.0	72	72
6.5	9.75	78	78
7.0	10.5	84	84
7.5	11.25	90	90
8.0	12.0	96	96
8.5	12.75	102	102
9.0	13.5	108	108
9.5	14.25	114	114
10.0	15.0	120	120

Exhibit 6. Volumes of Cylinders

Volumes of Cylinders (pints)												
Diameter (in.)												
Height (in.)	1	2	3	4	5	6	7	8	9	10	11	12
1	0.03	0.11	0.24	0.44	0.68	0.98	1.33	1.74	2.20	2.72	3.29	3.92
2	1.05	0.22	0.49	0.87	1.36	1.96	2.67	3.48	4.41	5.44	6.58	7.83
3	0.08	0.33	0.73	1.31	2.04	2.94	4.00	5.22	6.61	8.16	9.87	11.75
4	0.11	0.44	0.98	1.74	2.72	3.92	5.33	6.96	8.81	10.88	13.16	15.67
5	0.14	0.54	1.22	2.18	3.40	4.90	6.66	8.70	11.02	13.60	16.46	19.58
6	0.16	0.65	1.47	2.61	4.08	5.88	8.00	10.44	13.22	16.32	19.75	23.50
7	0.19	0.76	1.71	3.05	4.76	6.85	9.33	12.19	15.42	19.04	23.04	27.42
8	0.22	0.87	1.96	3.48	5.44	7.83	10.66	13.93	17.63	21.76	26.33	31.33
9	0.24	0.98	2.20	3.29	6.12	8.81	12.00	15.67	19.83	24.48	29.62	35.25
10	0.27	1.09	2.45	4.35	6.80	9.793	13.33	17.41	22.03	27.20	32.91	39.17
11	0.30	1.20	2.69	4.79	7.48	10.77	14.66	19.15	24.24	29.92	36.20	43.08
12	0.33	1.31	2.94	5.22	8.16	11.75	15.99	20.89	26.44	21.64	39.49	47.00
13	0.35	1.41	3.18	5.66	8.84	12.73	17.33	22.63	28.64	35.36	42.79	50.92
14	0.38	1.52	3.43	6.09	9.52	13.71	18.66	24.37	30.84	38.08	46.08	54.84
15	0.41	1.63	3.67	6.53	10.20	14.69	19.99	26.11	33.05	40.80	49.37	58.75

Exhibit 7. Common Liquid Measurements and Conversions

Liquid Measurements	
1.	3 tsp = 1 tbsp
2.	4 tbsp = ¼ cup
3.	2 cups = 1 pint
4.	4 cups = 1 qt
5.	2 pints = 1 qt
6.	8 pints = 1 gal
7.	4 quarts = 1 gal
8.	Pints ×.0.473 = liters
9.	Milliliters × 1000 = liters
10.	1 pint = 1 lb

Conversions		
Unit	Conversions to Pints	Weight (lb)
1 teaspoon	0.01	0.01
1 tablespoon	0.03	0.03
1/4 cup	0.13	0.13
1/3 cup	0.17	0.17
1 cup	0.5	0.5
1 pint	1	1
1 quart	2	2
1 gal	8	8

Exhibit 8. V2 Nominal Density Guidance Table

Material	Density (kg/L)	References
Aluminum	3.0	1, 2
Cement	2.0	1
Cardboard (fiber board)	0.8	5
Copper	9.0	1, 2
Fiber board (insulating)	0.8	4
Fire Brick (90% aluminum oxide)	3.0	4
Glass	2.0	3
Glass, Bulk Density	2.0	3
Glass, Raschig Rings (0.06 kg/ring)	0.6	4
Graphite, Bulk Density	0.5	3
Gravel	2.0	3
Iron	7.5	2
Lead	11.0	1, 2
Plastic (e.g., 10 ml liner material)	0.9-1.0	Calculated
Plastic (e.g., 90 ml heavy rigid liner material)	0.9-1.0	Calculated
Rubber	0.9-2.0	2
Sand	2.0	3
Sludge	1.0-1.5	Common Knowledge
Soil	1.0-1.8	2
Stainless Steel	8.0	1
Steel	8.0	1, 2
Tantalum	17.0	2
Wood (fir, oak, pine, avg.)	1.0	3
Water	1.0	1.3

The actual density of specific metals or wood types may vary due to the type of wood or the composition of the metal alloy.
Water has a nominal density of 1 kg/L
1 kilograms = 2.2 pounds

References

1. Shigley, J. E., Mechanical Engineering Design, 3rd ed. 636
2. Marks Standard Handbook for Mechanical Engineers, 8th ed. 6-60/61
3. Perry, John H., Chemical Engineers Handbook, 3rd ed. 1549-52
4. Harbison-Walker Refractories Co., Technical Bulletin 12, HU
5. Rocky Flats procedure, 4-I19-NDT-00569

Exhibit 9. Volume Conversion Table, Cubic Inches to Pints

in^3	1	2	3	4	5	6	7	8	9	10	11	12	13	14	15	16	17	18	19	20	21	22
1	.04	.07	.10	.14	.17	.21	.24	.28	.31	.35	.38	.42	.45	.49	.52	.55	.59	.62	.66	.69	.73	.76
2	.07	.14	.21	.28	.35	.42	.49	.55	.62	.69	.76	.83	.9	.97	1.04	1.12	1.18	1.25	1.32	1.41.395	1.45	1.52
3	.1	.17	.31	.42	.52	.62	73	.83	.94	1.04	1.14	1.25	1.35	1.45	1.56	1.66	1.77	1.87	1.97	2.08	2.18	2.29
4	.14	.28	.42	.55	.69	.83	.97	1.12	1.25	1.39	1.52	1.66	1.8	1.94	2.08	2.22	2.36	2.49	2.63	2.77	2.91	3.05
5	.17	.35	.52	.69	.87	1.04	1.21	1.39	1.56	1.73	1.9	2.08	2.25	2.42	2.6	2.77	2.94	3.12	3.29	3.46	3.64	3.81
6	.21	.42	.62	.83	1.04	1.25	1.45	1.66	1.87	2.08	2.29	2.49	2.7	2.9	3.12	3.32	3.53	3.74	3.95	4.16	4.36	4.57
7	.24	.49	.73	.97	1.21	1.45	1.7	1.94	2.19	2.42	2.67	2.91	3.15	3.39	3.64	3.88	4.12	4.36	4.61	4.85	5.09	5.33
8	.28	.55	.83	1.11	1.39	1.66	1.94	2.22	2.49	2.77	3.05	3.32	3.61	3.88	4.16	4.43	4.71	4.99	5.26	5.54	5.82	6.1
9	.31	.62	.94	1.25	1.56	1.87	2.18	2.49	2.81	3.12	3.43	3.74	4.05	4.36	4.68	4.99	5.3	5.61	5.92	6.23	6.66	6.86
10	.35	.69	1.04	1.39	1.73	2.08	2.42	2.77	3.12	3.46	3.81	4.16	4.5	4.85	5.19	5.54	5.89	6.23	6.58	6.92	7.27	7.62
11	.38	.76	1.14	1.52	1.9	2.29	2.67	3.05	3.43	3.81	4.19	4.57	4.95	5.33	5.71	6.1	6.48	6.86	7.24	7.62	8	8.38
12	.42	.83	1.25	1.66	2.08	2.49	2.91	3.32	3.74	4.16	4.57	4.99	5.4	5.82	6.23	6.65	7.06	7.48	7.98	8.31	8.73	9.14
13	.45	.9	1.35	1.8	2.25	2.7	3.15	3.61	4.05	4.5	4.95	5.4	5.85	6.3	6.75	7.2	7.65	8.1	8.55	9	9.45	9.9
14	.49	.97	1.45	1.94	2.42	2.9	3.39	3.88	4.36	4.85	5.33	5.82	6.3	6.79	7.27	7.76	8.24	8.72	9.21	9.7	10.18	10.67
15	.52	1.04	1.56	2.08	2.6	3.12	3.64	4.16	4.68	5.19	5.71	6.23	6.75	7.27	7.79	8.31	8.83	9.35	9.87	10.39	10.91	11.43
16	.55	1.12	1.66	2.22	2.77	3.32	3.88	4.43	4.99	5.54	6.1	6.65	7.2	7.76	8.31	8.87	9.42	9.97	10.53	11.08	11.64	12.19
17	.59	1.18	1.77	2.36	2.94	3.53	4.12	4.71	5.3	5.89	6.48	7.06	7.65	8.24	8.83	9.42	10	10.6	11.18	11.77	12.36	12.95
18	.62	1.25	1.87	2.49	3.12	3.74	4.36	4.99	5.61	6.23	6.86	7.48	8.1	8.72	9.35	9.97	10.6	11.22	11.84	12.47	13.09	13.71
19	.66	1.32	1.97	2.63	3.29	3.95	4.61	5.26	5.92	6.58	7.24	7.9	8.55	9.21	9.87	10.53	11.18	11.84	12.5	13.16	13.82	14.48
20	.69	1.39	2.08	2.77	3.46	4.16	4.85	5.54	6.23	6.92	7.62	8.31	9	9.7	10.39	11.08	11.77	12.47	13.16	13.85	14.55	15.24
21	.73	1.45	2.18	2.91	3.64	4.36	5.09	5.82	6.55	7.27	8	8.73	9.45	10.18	10.91	11.64	12.36	13.09	13.82	14.55	15.27	16
22	.76	1.52	2.29	3.05	3.81	4.57	5.33	6.1	6.86	7.62	8.38	9.14	9.9	10.67	11.43	12.19	12.95	13.71	14.48	15.24	16	16.76

Multiply the cross-section volume in the table by the height of the object to get the volume of the object in pints. The cross-section volume is based on a height of 1 inch.

Exhibit 10. Volume Conversion for Partial 55-gallon Drum (in pints)

Volume	1/8	1/4	1/3	1/2	2/3	3/4
1st chime	18	36	48	73	97	109
2nd chime	37	74	97	147	198	221
Full drum	55	110	145	220	295	330

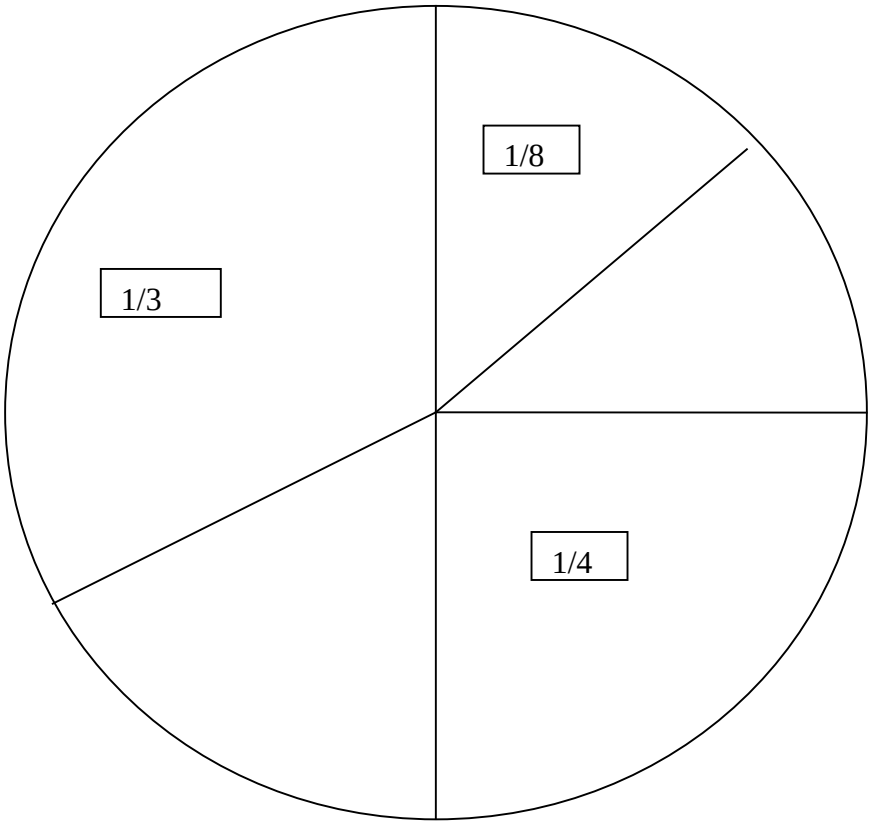

Exhibit 11. Visual Examination Equipment IDs

WIPP #	Site Equipment #	Procedure Number Method Equipment Description	Components	Software
9VE2	Z-250-VEC	Procedure – INST-OI-34, Method – BN-VE2 Description –Visual Examination of Legacy Waste Containers (VEC)	N/A. (Method described in procedure INST-OI-34).	Waste Tracking System (WTS)
9VE3	Z-250-VNC	Procedure – INST-OI-34, Method – BN-VE3 Description – Newly Generated Waste Visual Examination Closure (VNC)	N/A. (Method described in procedure INST-OI-34).	Waste Tracking System (WTS)
9VE5	FAC – VEC	Procedure – INST-FOI-17, Method – BN-VE5 Description –Visual Examination of Non-Boxline Legacy Waste Containers (VEC)	N/A. (Method described in procedure INST-FOI-17).	Waste Tracking System (WTS)
9VE6	FAC – VNC	Procedure – INST-FOI-17, Method – BN-VE6 Description – Newly Generated Waste Visual Examination Closure (VNC)	N/A. (Method described in procedure INST-FOI-17).	Waste Tracking System (WTS)
9VE7	VE BID RPCK	Procedure – INST-FOI-17, Method – BN-VE7 Description – Visual Examination of Boxline Legacy Waste Containers (VEB) – Box to a drum repackaging	N/A. (Method described in procedure INST-FOI-17).	Waste Tracking System (WTS)
9VE8	VE DID RPCK	Procedure – INST-FOI-17, Method – BN-VE8 Description – Visual Examination of Boxline Legacy Waste Containers (VEB) – Drum to a new drum repackaging	N/A. (Method described in procedure INST-FOI-17).	Waste Tracking System (WTS)

WIPP #	Site Equipment #	Procedure Number Method Equipment Description	Components	Software
9VE10	DID RPCK	Procedure – INST-OI-34, Method – BN-VE10 Description – Visual Examination of Legacy Waste (VEB) – Drum to a new drum repackaging	N/A. (Method described in procedure INST- OI-34).	Waste Tracking System (WTS)

Exhibit 12. Description of Liners

Liner Type	Description
I	Straight wall liner with a rolled lip to the inside
II	Tapered shoulder liner with a slip fit cap, closure sealed with metal band
III	Tapered shoulder liner with a metal bolt closure ring
IV	Straight wall liner with a slip fit lid
Plastic	Plastic liner approximately 35 mil in thickness
Other	Any other type of liner type that is not identified above

Exhibit 13. Schematic of Criticality Control for Secondary Waste

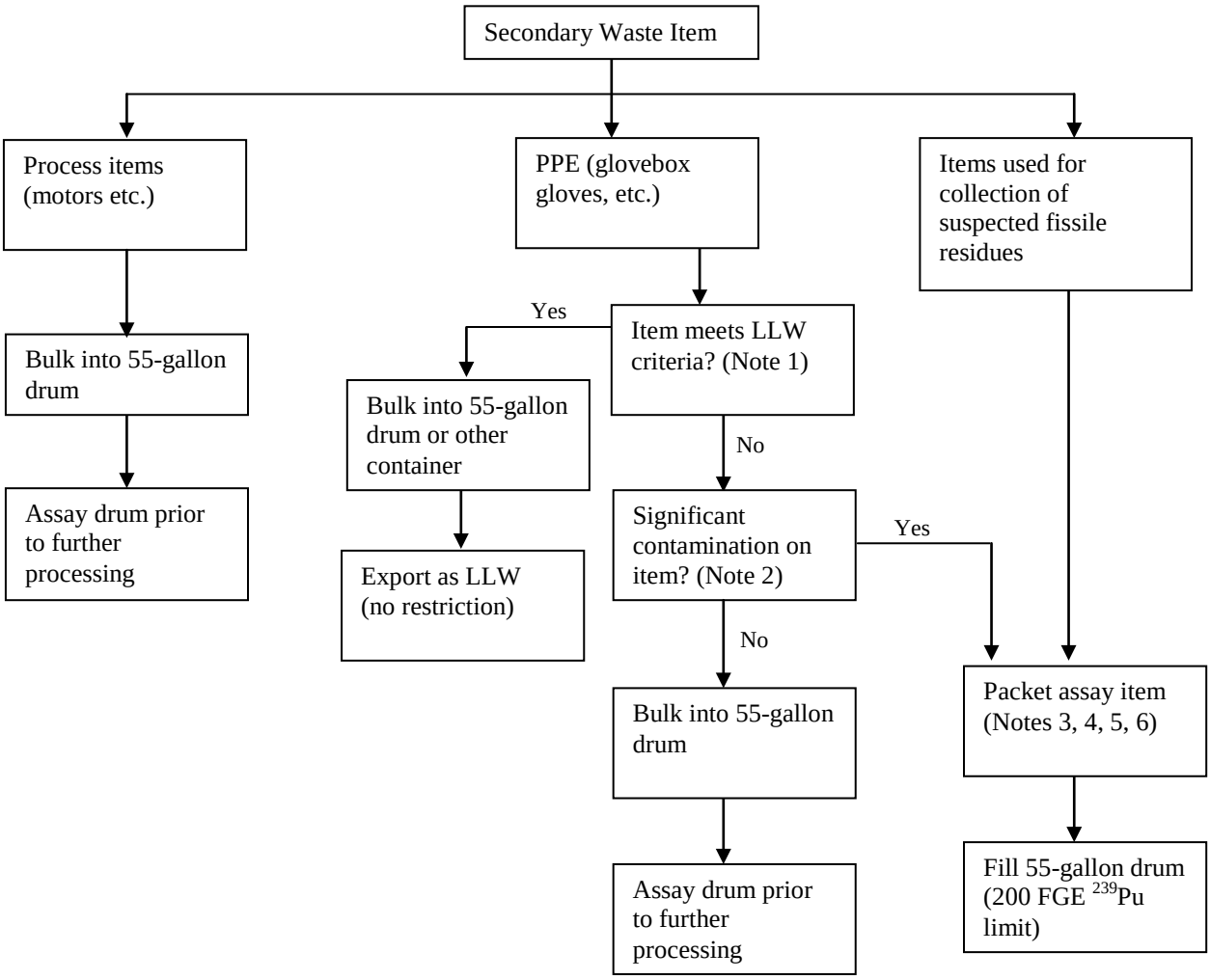

Notes:
1. Via smearing, hand-held instruments or other methods.
2. Visible contamination.
3. Packet assay systems shall be performance verified not less than once per day when being used.
4. The total error associated with the packet assay result shall be doubled and added to the measured FGE ^{239}Pu.
5. The validity of the packet assay system calibration shall be periodically verified in accordance with the manufacturer's guidelines.
6. Metal items cannot be packet-assayed (the special case waste is the exception).

Exhibit 14. Waste Incompatibility by IDC

Incompatible waste includes the following groups:

Waste Type	General Waste Description
Acids	ID-150: Laboratory Waste MD-805: Asbestos Filters MD-813: Glass Filters and Fiberglass MD-834: High Level Acid RF-335: Absolute 8 x 8 Filters (Treatment Only) RF-338 Insulation and CWS Filter Media (Treatment Only) RF-241: Americium Process Residue
Oxidizers	ID-005: Evaporator Salts Retrieved RF AE-100: General Plant Waste MD-805: Asbestos Filters MD-811: Evaporator and Dissolver Sludge MD-813: Glass Filters and Fiberglass MD-834: High Level Acid RF-005: Evaporated Salts RF-241: Americium Process Residue RF-430: Resin, Ion Column-Unleached RF-745: Pits 11 & 12 Evaporator Salts SD-703: Inorganic Sludge
Caustics	MD-835: High Level Caustic

Waste Type	General Waste Description
Halogenated Organics	RF-003: Organic Setups, Oil Solids RF-700: OASIS Waste RF-801: Solidified Organics BN-501: AMWTP PCB Soil BN-511 PCB Organic Homogeneous Solids [Treatment Only] BN-514 Absorbed Organic Squeezants [Treatment Only] BN-518: TRU Supercompactor Squeezants BN-526: Sample Returns BN-528: TRU PCB Liquids Generated During Retrieval BN-603: Absorbed Analytical Liquids BN-605 Absorbed Liquids TSCA/PCB [Treatment Only] RF-743: Pits 11 & 12 Organic Setups RF-746: Pits 11 & 12 Pad Oil Drums SD-704: Organic Sludge SD-705: Debris SD-706: Soil UN-00A: Undefined homogeneous solids
Unknowns	PC-000: "True" or post-RTR unknown
Pyrophoric Materials	RF-751: Roaster Oxide RF-999: Potential Roaster Oxide
Heterogeneous Debris	RF-998: Heterogeneous Debris
Heterogeneous Debris	IW-179: Early Waste Retrieval Heterogeneous Debris

(HWMA/RCRA Permit; TSA IS Document)

Separation or physical segregation requirements consist of the following:

1. Containers of acids with 5 gallons or more of observable liquids must be separated or physically segregated from caustics, and containers of acids with any observable liquids must be separated or physically segregated from halogenated organics.

2. Containers of caustics with 5 gallons or more of observable liquids must be separated or physically segregated from acids, and containers of caustics with any observable liquids must be separated or physically segregated from halogenated organics.

3. Containers of oxidizers with any observable liquids must be separated or physically segregated from halogenated organics.

4. Containers of halogenated organics with any observable liquids must be separated or physically segregated from acids, oxidizers, and caustics.

5. Containers with unknown waste must be separated by physical distance.

A container holding MW that is incompatible with any waste or any material stored nearby shall be segregated (separated by berm, dike, or wall).

(HWMA/RCRA Permit)

9.0 APPENDICES

Appendix A – List of LLW/MLLW Prohibited Items and Restricted Items

Appendix B – Revision Log

AMWTP INSTRUCTION		
INST-OI-34, Rev. 28	Issued: 09/03/13	Effective: 09/04/13
Non-Facility Visual Examination Operations		

Appendix A – List of LLW/MLLW Prohibited Items and Restricted Items (taken from LST-LLW-04)

Prohibited/Restricted Item	Additional Information/Examples
Prohibited/Restricted Item	**Additional Information/Examples**
Aerosol Cans	Description should specify evidence of puncture or venting and a volume estimate of liquid if present.
Animal Carcasses	Describe type and amount.
Asbestos	Items which may contain asbestos (floor tiles, insulation, etc.) Describe type and amount.
Batteries	Describe type such as D-Cell, C-Cell, Wet Cell (Lead-Acid), etc. and amount. If liquids are present, identify and quantify.
Beryllium*	Identify and describe. Provide form and amount by volume
Chelating agents*	Describe type such as EDTA and amount
Classified waste*	Describe type and amount
Compressed Gases	Describe type such as pressurized manifold component or other sealed vessel and amount. Includes pressurized gases and gas cylinders. Besides typical gas cylinder items to consider, include propane gas, butane gas, BIC lighter, etc. Includes fire extinguishers, describe size, content, and amount. Identify if vented.
Compressors/Refrigerator Systems	Identify and describe
D001-Ignitable, D002-Corrosive, D003--Reactive	Identify applicable code(s)
Etiological Agents*	Identify type and amountAlso includes other - biological, pathogenic, infectious materials
Explosives	Describe suspect items such as ammunition, dynamite, etc. and amount
Fire extinguishers	Describe size , content, and amount
Graphite	Form and amount by volume
Impenetrable Objects	Unable to completely identify and verify contents. Identify % by volume impenetrable.

AMWTP INSTRUCTION		
INST-OI-34, Rev. 28	Issued: 09/03/13	Effective: 09/04/13

Non-Facility Visual Examination Operations

Prohibited/Restricted Item	Additional Information/Examples
Lab Packs	Lab packs are small containers of chemicals placed into a larger container surrounded by absorbent. Describe if chemicals are present.
Lead	If present, is it elemental? Provide general dimensions, description, and quantity of lead
Liquids	Describe if liquid is free or containerized, viscosity description, and volume of liquid
Mercury	Describe (contained – thermometers, switches, uncontained, etc.) Provide volume, identify if it is elemental.
Particulates*	Describe type, amount, and if material is containerized
PCBs	Describe size and type of item such as ballast, capacitor, or transformer. Identify if solid or liquid. If liquid is present, provide a volume estimate of liquid
Pyrophoric waste*	Describe type such as metal hydrides, metal powders, etc and amount
Sharps	Describe type such as needles, razors, knives, heavy bulky metal, etc.
Sealed Sources	Identify and describe
Solid Uranium/Thorium*	Identify, describe, provide volume or mass.
Tanks / Vessels	Estimate volume capacity and percent full (of tank). If viscosity of liquid can be identified, provide viscosity description.
Valves	(attached or not attached to an object) If attached, describe the object.

*The presence of these items in the waste container may not be evident during RTR or VE. The presence or absence of these items in each container is determined by application of AK/PK or other methods during waste verification.

Appendix B – Revision Log

Revision Number	Date Approved	Pages Affected	Description of Revision
0	10/09/02	All	Initial issue. DCR-1515-Issued for Formal validation during commissioning activities.
1	03/10/03	All	DCR-2031, Major revision to remove packaging of newly generated waste and to incorporate MP-TRUW-8.19, RTR/VE Drum Selection requirements.
2	03/27/03	All	DCR-2126, Minor change, to amend date Form DOE Approves Retrieval Operations Start-up to 03/28/03 and Editorial update to Records Section.
3	05/01/03	All	DCR-2213, Major rewrite to more accurately reflect actual VE Operations.
4	05/07/03	Various	DCR-2245, Changed to match software changes (i.e., screen names, step sequences).
5	7/09/03	All	DCR-2327, Changed to include characterization of Debris Waste
6	8/13/03	Pages 16, 17 & 24	DCR-403; Replacing name of VCR and video recording equipment to allow for use of new digital audiovisual equipment.
FC-1	08/24/03	Pages 29 & 30	DCR-8/24/03-1420, Eliminate steps 4.6.16 – 4.6.18 and change verbiage of 4.6.19.2.
7	06/23/04	Various	DCR-2443, Incorporate Field Change 1, CRIT comments, WIPP comments, and minor editorial, Match software changes.
8	07/15/04	ALL	DCR-3170. Remove Closure VE. Add RTR/VE Update. Incorporate Crit Analysis for 635 Tent and Coring Glovebox for Debris VE. Incorporate VE (in lieu of RTR). Minor editorial changes. Section 4.3.5: Change to "…leather or leather palm lined Kevlar gloves." Complete rewrite of procedure.
9	08/09/04	Various	DCR-3224. Incorporate WIPP comments from Rev. 8.

AMWTP INSTRUCTION		
INST-OI-34, Rev. 28	Issued: 09/03/13	Effective: 09/04/13

Non-Facility Visual Examination Operations

Revision Number	Date Approved	Pages Affected	Description of Revision
10	01/06/05	Various	DCR-3371. Incorporate CH-TRAMPAC and CH-WAC. Minor editorial changes. Rewrite document in response to comments from CBFO and consistency to FOI-17. Incorporate WIPP comments from Rev. 10B submittal (12/16/04).
11	03/17/05	Various	DCR-4115. Incorporate Field Changes DCR-4114 (FC-1), DCR-4136 (FC-2), and DCR-4151 (FC-3). Incorporated numerous changes to document per Environmental manager's direction based on DEQ letter of 1/27/05. Incorporate WIPP Comments from Rev 11A.
12	10/11/05	Various	DCR-4422-1. Incorporate changes in WTS and the use of new Equipment IDs. Incorporate company name changes as identified in DCR-4299. Incorporate FC-1, DCR-4438. FC-1, DCR-4626.
13	1/17/06	Various	DCR-4637. Incorporate changes necessary for proper sequencing of events, WTS changes for handling PCBs. Implement MP-DOCS-18.1 formatting standards. Incorporate FC-1, FC-2 on DCR-4529, DCR-4582, of FOI-17, as appropriate, for consistency to INST-FOI-17. Resolve review comments. Apply consistency with FOI-17, as appropriate.
14	2/14/06	Various	DCR-4798. Remove all references to RPT-TRUW-12. Add clarification to step if liner is not present.
15	03/30/31	All	DCR-4921. Made formatting correction to resolve CAR-21421.
15-FC-1	04/01/06	Pages 15, 16	DCR-4930.Clarification of qualifications. Deleted Step 3.2.5.
15-FC-2	10/19/06	Figure 5	DCR-5493. Updated Figure 5, List of Prohibited Items.
15-FC-3	10/24/06	Figure 5	DCR-5504. Changed Figure 5 "Compressed Gases"

AMWTP INSTRUCTION		
INST-OI-34, Rev. 28	Issued: 09/03/13	Effective: 09/04/13

Non-Facility Visual Examination Operations

Revision Number	Date Approved	Pages Affected	Description of Revision
16	12/11/06	Various	DCR-5454. Incorporate Field changes (FC-1, 2, 3). Add steps for NTS WAC criteria, Steps for ISMS implementation and revise Figure 4.
17	01/23/07	All	DCR-5621. Rewrite procedure to reorganize approach to standards-based, requirements based instruction. Incorporate 311 Permit changes. Change title to Non-Facility Visual Examination Operations.
17 FC-1	01/25/07	3	DCR-5708. Added S4000 (see def.) to include S4000 in scope of work.
18	07/12/07	Various	DCR-5754. Incorporate field change. Changed to General Use. Editorial changes per conduct of operations and some VE additions in Section 2.
18 FC-1	09/10/07	2	DCR-6392. Revise Step 3.1.2 for areas of use.
18 FC-2	12/19/07	Various	DCR-6658. WAP clarification. Clarify the requirements for remediation of liquids.
19	04/08/08	Various	DCR-6551. Make changes to roll-down requirements due to CCP transition. Incorporate field changes.
19 FC-1	08/13/08	12, 17	DCR-7449. Implemented WAP change to limited VE exam.
19 FC-2	09/24/08	23	DCR-7567. Deleted Step 4.2.27 to accommodate WTS SCR 3401.
20	10/08/08	All	DCR-7092. Updated scope of activity, Roles and Responsibilities, and WTS instructions. Updated Exhibit 4, List of Prohibited Items. Reference update. Streamline in accordance with VE task analysis. Editorial changes. Applied blue sheet changes—changed STL to SS and SM to PSM.
20 FC-1	11/12/08	27, 60	DCR-7740. Add new step in Section 4.6 (RTR/VE update) add NOTE and step in 4.2 to support WTS changes SCR #3297.
20 FC-2	12/03/08	Various	DCR-7821. Update steps with correct new gen. Waste Equipment IDs.

AMWTP INSTRUCTION		
INST-OI-34, Rev. 28	Issued: 09/03/13	Effective: 09/04/13

Non-Facility Visual Examination Operations

Revision Number	Date Approved	Pages Affected	Description of Revision
20 FC-3	01/07/09	P 63	DCR-7885. Add a note and step to support WTS changes SCR 3457.
21	01/21/09	Various	DCR-7873. Incorporated FC-1 (DCR-7740) and FC-2 (DCR-7821) and DSA implementation changes.
22	06/23/10	Various	DCR-9221. Made changes for establishing consistency and implementing current WIPP Permit modifications.
23	12/17/10	Various	DCR-9584. Incorporated the WIPP Renewal Request and Waste Acceptance Criteria changes.
23 FC-1	01/26/11	Various	DCR-9717. Add Form-1900, AMWTP Offsite Waste Stream Profile, as information resource.
24	02/03/11	Pg 86	DCR-9773. Added additional IDCs to Exhibit 14.
24 FC-1	03/16/11	Various	DCR-9979. Changes needed for WTS functionality.
25	08/29/11	Various	DCR-10073. Incorporated field change 1 (DCR-9979) and deleted IDC RF-095 to provide consistency with RPT-ESH-014.
26	11/05/11	Various	DCR-10394. Incorporated ITG-Bluesheet-019
27	12/29/11	Various	DCR-10539. Added prohibited/restricted items of concern for the LLW/MLLW program.
27 FC-1	04/15/13	Pg 24	DCR-12264. Change responses and field names in WTS (SCR-4445).
28	09/03/13	Step 4.2.28 & 4.2.28.1	DCR-12700. Incorporated FC-1 (DCR-12264).

Drum Filter Installation

(General Use)

Advanced Mixed Waste Treatment Project

Approval:

(*Signature on file. See DCR-13547.*) 07/25/14
Date

Verification of Effective Revision: (After verifying current revision, replace cover page on working copy if more space is needed.)

Initials	Date	Initials	Date	Initials	Date	Initials	Date

AMWTP OPERATING INSTRUCTION		
INST-OI-45, Rev. 20	Issued: 07/25/14	Effective: 07/25/14 @ 1300 hr
Drum Filter Installation		

TABLE OF CONTENTS

1.0 PURPOSE/SCOPE 1
2.0 ROLES AND RESPONSIBILITIES 1
3.0 PRECAUTIONS AND LIMITATIONS/PREREQUISITES 1
3.1 Precautions and Limitations 1
3.2 Prerequisites 3
4.0 INSTRUCTIONS 4
4.1 General 4
4.2 DVS Server Operator Control Console Startup 4
4.3 Filter Insertion 8
4.4 End of Shift Activities 15
4.5 Abnormal and Infrequent Operations 16
4.6 Post-Job Review 33
5.0 DEFINITIONS 34
6.0 REFERENCES 34
7.0 RECORDS 35
8.0 EXHIBITS 35
9.0 APPENDIXES 35
Appendix A – Revision Log A1

AMWTP OPERATING INSTRUCTION		
INST-OI-45, Rev. 20	Issued: 07/25/14	Effective: 07/25/14 @ 1300 hr
Drum Filter Installation		

1.0 PURPOSE/SCOPE

This document provides instruction for the installation only of high efficiency particulate air (HEPA) filters into waste drums within the Drum Vent System (DVS), at the AMWTP, located at the Idaho National Laboratory (INL).

2.0 ROLES AND RESPONSIBILITIES

Performer	Responsibilities
Industrial Safety/Industrial Hygiene (IS/IH)	• Provides technical expertise and oversight • IH performs IH surveys.
Operations Technician (OT)	• Unless otherwise specified, performs the steps in this instruction and performs limited radiological surveys.
Radiological Controls Technician (RCT)	• Provides support for operations to include, but not be limited to, performing radiological surveys • Ensures that the radiological controls shift supervisor (RCSS) and IS/IH representatives are notified in the event of a contaminated drum
Shift Supervisor (SS)	• Ensures that the RCSS and IS/IH representatives are notified in the event of a contaminated drum • Performs post-job reviews.

3.0 PRECAUTIONS AND LIMITATIONS/PREREQUISITES

3.1 Precautions and Limitations

3.1.1 Mechanical lifting devices must be used as much as possible. Manhandling of containers/equipment shall be minimized.

3.1.2 Personnel must use proper lifting practices. Personnel are restricted to lifting a maximum of 50 lb, or one-third of their body weight, whichever is less.

3.1.3 Manual operation of the DVS outside the scope of this procedure is not allowed unless specifically called for in an approved test or authorized work procedure.

3.1.4 All waste container handling must be done in accordance with INST-OI-11, Waste Container Handling.

3.1.5 Payload containers that have been stored in an unvented condition (i.e., no filter and/or unpunctured liner) must be vented and aspirated.

(MP-TRUW-8.1)

3.1.6 Drum venting or opening a drum without a vent shall be performed in a safety-significant barrier and personnel shall only be present outside the safety-significant barrier of the drum venting enclosure during drum venting operations or while opening a drum without a vent.

(RPT-TSR-03, SAC 5.2.7)

3.1.7 The equipment used in this procedure has an alternative isolation device for routine operational activities or minor servicing as defined in 29 CFR 1910.147, The Control of Hazardous Energy (Lockout-Tagout), and ANSI Z244.1, Control of Hazardous Energy Lockout/Tagout and Alternative Methods.

3.1.7.1 For DVS glove box entry the operator shall verify the "Power Head Blocked" message is displayed on the operator console when the light curtain is interrupted.

3.1.7.2 The following activities are allowed under alternative methods of hazardous energy control, per MP-COPS-9.20, Hazardous Energy Control Processes:

- Filter or drill bit installation/removal on the power head
- Radiological and IS/IH surveys in the glovebox
- Glovebox cleanout.

3.1.8 All secondary waste must be packaged in accordance with INST-OI-24, Packaging Radioactive Waste, and the applicable HWD (070505-02 [MLLW] or 110713-01 [LLW]).

3.1.9 When venting 83-/85-drums with IDC MD-836, filter NF357DS shall be used.

3.1.10 When venting all other 83-/85-drums, UT9412L filter shall be used.

3.2 Prerequisites

3.2.1 WMF-634 ventilation is operating per INST-OI-33, Characterization Facilities HVAC System Operations.

3.2.2 Bucket 1A on MCC-232-002 is closed or in the ON position.

3.2.3 Bucket 1B on MCC-232-002 is closed or in the ON position.

3.2.4 Bucket 2EL on MCC-232-002 is closed or in the ON position.

3.2.5 Breakers 1 and 3 on BDP-232-003 are in the ON position.

3.2.6 Local disconnect switch DS-220-002 is closed or in the ON position.

3.2.7 The DVS fire protection system is lined up for automatic initiation and FWR6-ISV-3403 is locked open.

3.2.8 The DVS ventilation is running by visual inspection of shaft rotation.

3.2.9 The "E-stop" button, the two pull cords, and the 24-VDC power supply are reset as indicated by a green light on the control panel.

3.2.10 There is greater than 0.1 in. H_2O vacuum on the enclosure as indicated on the drum cabinet magnehelic gauges with the survey door and the main cabinet doors closed.

3.2.11 Nitrogen gas pressure is greater than 300-psi bottle pressure, and line pressure is approximately 80 psi.

3.2.12 All drums must be previously vented prior to installing the NucFil-036-R-DA filter.

3.2.13 A pre-job brief has been performed in accordance with MP-COPS-9.17, Performing Pre-Job Briefings and Post-Job Reviews, as directed by the SS prior to performing work in this procedure.

4.0 INSTRUCTIONS

4.1 General

4.1.1 **IF** at any time during performance of this procedure the Waste Tracking System (WTS) is unavailable,
THEN document filter data on Form-1603, Filter Insertion Record.

4.1.1.1 **WHEN** WTS becomes available,
THEN transfer data documented on Form-1603 to the applicable container(s) in WTS.

4.1.2 **IF** access to the area under the DVS platform is needed,
THEN wear a hardhat and safety glasses.

4.1.3 **GO TO** the appropriate procedure section from the following table based on the desired task to be performed,
THEN RETURN TO this step until all appropriate operations have been performed.

Task	Section
DVS Server Operator Control Console Startup	4.2
Filter Insertion	4.3
End of Shift Activities	4.4
Abnormal and Infrequent Operations	4.5
Post-Job Reviews	4.6

4.2 DVS Server Operator Control Console Startup

4.2.1 Ensure that the DVS server operator control console is turned on.

4.2.2 **IF** needed,
THEN log on to the DVS server operator control console with the applicable “User ID” and “Password.”

4.2.3 Ensure that the DVS has been initialized by checking that the following are active on the DVS server operator control console task bar:

- Configuration Explorer
- Factory Link Run-Time (Report Viewer)
- Factory Link OLE 2.0
- Barcode ID.

4.2.4 **IF** any of the listed items are **NOT** active on the DVS server operator control console task bar,
THEN perform the following:

4.2.4.1 Double click on the "Configuration Explorer" icon.

4.2.4.2 Double click on "Factory Link Servers."

4.2.4.3 Double click on "My Factory Link Server."

4.2.4.4 Right click on "BNFL."

4.2.4.4.1 Highlight "Start/Stop" with the mouse.

4.2.4.4.2 Highlight "Start" with the mouse and click (this starts the application).

4.2.4.4.3 Minimize the screen.

4.2.4.4.4 Check that the barcode reader screen is active.

4.2.5 Double click on the "BNFL" icon.

NOTE: *A "Welcome to DVS" message will appear on the "Client Builder" window.*

4.2.6 Click on the "Login/Start" button.

4.2.6.1 Enter "user name" and "password."

4.2.6.2 Click "OK" and a "Batch Initialization" screen will appear.

4.2.7 Check the HEPA train magnehelics by performing the following:

4.2.7.1 Place the Manual/Auto switch in Manual.

4.2.7.2 Select "Cab Door Open."

NOTE: *The button will turn green while the door is opening*.

4.2.7.3 **WHEN** the cabinet door is fully open,
AND the position indicator has turned green,
THEN verify that the 1st stage HEPA magnehelic (Gauge PDI-220-003) reads between 1.0 and 2.75 in. of water and the 2nd stage HEPA magnehelic (Gauge PDI-220-004) reads between 0.6 and 2.35 in. of water and the combined total is less than 3.35 in. of water.

4.2.7.3.1 **IF** either magnehelic or the combined total is out of the specified range,
THEN suspend operations,
AND notify the SS.

4.2.7.4 Select "Cab Door Close."

NOTE: *The button will turn green while the door is closing*.

4.2.7.5 **WHEN** the cabinet door has fully closed
AND the position indicator has turned green,
THEN place the Manual/Auto switch in Auto.

4.2.7.6 Check the light curtain function as follows:

4.2.7.6.1 Ensure the operating screen is displayed by pressing the "CONTROL" key and the "F6" key simultaneously, if necessary.

4.2.7.6.2 Ensure the light curtain is not interrupted.

4.2.7.6.3 Select "Sequences" from the "Diagnostics" pull down menu.

4.2.7.6.4 Select "240-Lower PH" and close the "Sequences" page.

4.2.7.6.5 Observe that the power head is lowering.

4.2.7.6.6 Allow a glove to interrupt the light curtain,

4.2.7.6.7 Observe that the power head motion stopped, **AND** check that the "Power Head Blocked" message is displayed on the DVS control screen.

4.2.7.6.7.1 **IF** the power head continues to lower,
OR the "Power Head Blocked" message is **NOT** displayed,
THEN stop operation of the DVS and contact the SS.

4.2.7.6.8 Ensure the light curtain is not interrupted.

4.2.7.6.9 Depress the "Reset" button.

4.2.7.6.10 Select "Sequences" from the "Diagnostics" pull down menu.

4.2.7.6.11 Select "380-Raise PH" and close the "Sequences" page.

4.2.7.6.12 Observe that the power head is rising and returns to the home position.

4.2.8 Press the "CONTROL" and "F1" keys simultaneously.

4.2.9 Click on the "Install Filters Only" button.

4.2.9.1 Press the "CONTROL" and "F6" keys simultaneously to return the DVS operator control console to the operating screen, if necessary.

4.3 Filter Insertion

NOTE 1: *This section requires a drum to be present in the cabinet but does not result in a sample being drawn from the drum.*

NOTE 2: *Throughput on the DVS is restricted to a running total of 560 drums per calendar week.*

(CAT 1 and CAT 2 Air Exemption for WMF-634)

NOTE 3: *When oil drums are being vented, they will be campaigned through DVS with no other drums on the conveyor.*

4.3.1 **IF** the drums to be vented are bulged and have restraining straps,
THEN GO TO Section 4.5.1 to remove the restraining straps
WITHOUT RETURNING TO this step.

4.3.2 **IF** an error condition pop-up should occur,
THEN investigate the fault and fix, if possible,
AND THEN click "continue" to proceed.

4.3.3 Ensure that a barcode number appears at the top left corner of the DVS server operator control console screen.

4.3.3.1 **IF** the drum barcode number is **NOT** scanned automatically during transfer to the drum cabinet causing a "barcode reader error" message to appear,
THEN manually enter the barcode number by performing the following:

4.3.3.1.1 Highlight the field.

4.3.3.1.2 Enter the barcode number.

4.3.3.1.3 Press the "Enter" key.

4.3.3.1.4 Press "Accept."

4.3.3.1.5 Press "Yes."

NOTE: *If the survey door does not open or close, the factory link tag "BCS_READ_ERROR" did not get set to 0.*

4.3.4 Ensure that the survey door opens.

4.3.4.1 **IF** the door does **NOT** open,
THEN press the "Change Barcode" button on the Diagnostics/Comm Page
AND GO TO Step 4.3.3.1
WITHOUT RETURNING TO this step.

NOTE: *If there is excessive corrosion which if removed would possibly cause the integrity of the drum lid to be in question, an evaluation may be required to replace the lid prior to installing a NucFil-036-R-DA filter.*

4.3.5 **WHEN** the survey access opens,
THEN inspect the drum lid for dents, imperfections, or existing filters that are found to interfere with the seal housing.

4.3.5.1 **IF** any dents, imperfections, or existing filters are found to interfere with the seal housing
OR the bung plug on an oil drum is **NOT** accessible,
THEN select "Back out Drum" or "Return to ICS."

4.3.5.1.1 As necessary, reposition the drum, ensuring that the lid area is clean where the seal housing will mate with the drum lid.

4.3.5.1.1.1 **IF** venting an oil drum,
THEN reposition the drum with the bung plug accessible to the survey door to facilitate removal of plug and installation of bung filter.

4.3.5.1.2 **IF** able to clear the seal area,
THEN select "Bring in Drum."

4.3.5.1.3 **IF** unable to clear the seal area,
THEN select "Return to ICS."

4.3.5.2 **IF** the drum lid seal area is clear,
THEN select "Lid OK."

4.3.5.3 **IF** the survey door does **NOT** close,
THEN press the "Change Barcode" button on the Diagnostics/Comm Page and manually enter the barcode number by performing the following:

4.3.5.3.1 Highlight the field.

4.3.5.3.2 Enter the barcode number.

4.3.5.3.3 Press the "Enter" key.

4.3.5.3.4 Press "Accept."

4.3.5.3.5 Press "Yes."

4.3.6 Ensure that the drum is lifted until the lid of the drum is in contact with the seal housing by the operator control console indicating "Drum Seal Achieved."

4.3.7 Select appropriate filter or step drill per the SS.

4.3.7.1 **IF** venting an oil drum,
THEN use an UT9413 filter with the sample port plug removed.

WARNING

The motion of the power head and drill motor may cause pinching/crushing of fingers.

NOTE: *The following steps implement alternate methods of hazardous energy control per MP-COPS-9.20.*

4.3.8 **WHEN** placing hands in the glove box gloves,
THEN observe that the "Power Head Blocked" message is displayed on the operator console.

4.3.8.1 **IF** the "Power Head Blocked" message is **NOT** displayed,
THEN remove hands from the gloves and notify the SS.

WARNING

Filters and filings are sharp objects and potentially contaminated in the glove box.

4.3.9 Ensure cut-resistant gloves and radiological personal protective equipment (PPE) are worn when coming into contact with, or handling, potentially contaminated hardware inside the glove box.

4.3.10 Insert the filter or step drill into the collet via the enclosure gloveports.

4.3.10.1 Press the "Close" button inside the enclosure.

CAUTION

Failure to remove hands from the enclosure will result in interrupting the light curtain and stopping power head movement.

4.3.11 Remove hands from the enclosure.

4.3.11.1 Survey hands.

4.3.12 Ensure that the cabinet and survey doors are closed.

(RPT-TSR-03, SAC 5.2.7)

4.3.13 Click on the appropriate button on the DVS server operator control console screen that corresponds with the filter or step drill that was inserted into the collet in Step 4.3.10 to start the sequence.

4.3.14 Visually check that the power head lowers.

4.3.14.1 **IF** a mismatch occurs between the filter model inserted in the collet and the filter insertion program selected, causing the power head to raise back to its home position, **THEN** correct the mismatch and resume normal operation.

4.3.15 Ensure that the following sequence occurs:

NOTE: *The power head will drill through the drum lid in multiple periods of drilling. The drill sequence will continue to spin but will intermittently stop its downward motion allowing the drill to cool.*

4.3.15.1 **IF** an *impenetrable object* (see def.)/stripped-out filter fault occurs,
THEN GO TO Section 4.5.10
WITHOUT RETURNING TO this step.

NOTE: *The power head will seat the filter to the drum lid. A successful cycle will result in the black arrow lining up with the black square on the proxy switch support.*

4.3.15.2 **WHEN** survey door is open,
THEN perform a direct scan survey of the filter insertion area.

4.3.15.2.1 **IF** contamination is found,
THEN GO TO Section 4.5.5
AND RETURN TO Step 4.3.16.

NOTE: *Approved methods of removing drill filings include tape press or HEPA vacuum.*

4.3.16 Wearing appropriate PPE, remove drill filings using approved method.

NOTE: *If the DVS step drill was used to install a NucFil-036-R-DA filter manually, the drum will lower in the DVS cabinet with a 1-in. hole drilled in the drum lid.*

4.3.16.1 **IF** the DVS step drill was used for the installation of a NucFil-036-R-DA filter,
THEN perform the following:

4.3.16.1.1 Ensure the hole is 1 in. or greater, using a ruler and/or go/no-go gauge.

4.3.16.1.2 **IF** the hole is smaller than 1 in.,
THEN perform the following:

4.3.16.1.2.1 Notify the SS.

4.3.16.1.2.2 Initiate an NCR in accordance with MP-Q&SI-5.4, Identification of Nonconforming Conditions,
AND record the size of the hole on the NCR.

4.3.16.1.3 Manually install a NucFil-036-R-DA filter over the hole.

4.3.16.1.3.1 **IF** the first filter does **NOT** adhere,
THEN apply a second filter.

4.3.16.1.3.2 **IF** the second filter does **NOT** adhere,
THEN notify the SS.

4.3.16.2 **IF** an oil drum was vented,
THEN perform the following:

4.3.16.2.1 Manually remove bung plug.

4.3.16.2.2 Install an NucFil-019 PG2 bung filter in the drum.

4.3.16.2.3 Perform ONE of the following:

4.3.16.2.3.1 Reinstall UT9413 sample port plug.

OR

4.3.16.2.3.2 Place a drop of RTV sealant in the UT9413 sample port.

4.3.17 Perform a swipe survey of the drum through the survey access door per radiological procedures.

4.3.17.1 **IF** contamination is found,
GO TO Section 4.5.5
AND RETURN TO Step 4.3.18.

4.3.17.2 **IF** contamination is **NOT** found,
AND IF a tape press was used to remove the drill filings,
THEN remove the tape press from the drum lid
AND place it in a bag labeled in accordance with radiological procedures.

4.3.17.2.1 Survey hands.

4.3.18 **WHEN** the survey is complete and meets the requirements of INST-RS&C-6.22.1, Radiological Surveys,
THEN perform the following:

4.3.18.1 Ensure the filter is tight and the O-ring gasket is compressed.

4.3.18.2 Survey hands and equipment used to tighten filters.

4.3.19 Enter filter data into WTS "Container Filters" screen.

NOTE: *When oil drums are being vented, Steps 4.3.23 and 4.3.23.1 may be performed concurrently with Steps 4.3.20 and 4.3.21.*

4.3.20 **IF** more drums are to be vented,
THEN press "Continue"
AND repeat Steps 4.3.1 through 4.3.19.

4.3.21 **IF** no more drums are to be vented,
THEN press "Continue"
AND GO TO Step 4.3.22 to secure the vent process,
WITHOUT RETURNING TO this step.

NOTE 1: *Initialization screen can be accessed on the DVS operator control screen by pressing the "Control" key and the "F1" key simultaneously.*

NOTE 2: *To prevent another drum from entering into the chamber, Step 4.3.22 has to be completed before the discharged drum reaches Integrated Control System (ICS) conveyor.*

4.3.22 On the "Batch Initialization" screen on operator control console click "Install Filters Only" button (it will turn red).

4.3.23 **IF** oil drum(s) are vented,
THEN ensure the UT9413 sample port plug is reinstalled in the filter upon removal from the ICS output queue prior to placing drum in a storage array.

4.3.23.1 Ensure the sample port reinstallation is recorded in the WTS Container Filters Screen Comment section for the UT9413 Filter Event for that drum.

4.4 End of Shift Activities

4.4.1 Notify the SS of pending shutdown.

4.4.2 Visually verify that the power head is in the "HOME" position.

4.4.3 Place the Manual/Auto switch in Manual.

4.4.3.1 Select "Cab Door Closed."

4.4.4 Ensure that the cabinet access and survey doors are closed.

4.4.5 Double click "Log Off" on the DVS server operator control console.

4.4.6 **WHEN** "You are leaving NucFil Project, please confirm your action" appears,
THEN select "OK."

4.4.7 Press the green reset button.

4.5 Abnormal and Infrequent Operations

4.5.1 **GO TO** the appropriate procedure section from the following table based on the desired task to be performed,
THEN RETURN TO this step until all appropriate operations have been performed.

Task	Section
Restraining Strap Removal for Venting Bulged Containers	4.5.2
Recovery from an "E-Stop" Condition	4.5.3
Dropped Waste Container	4.5.4
Contaminated Drum	4.5.5
Breached DVS Enclosure Glove	4.5.6
Breached Containment (Including Drums)	4.5.7
Loss of Characterization Facility EF-232-001 Extraction Fan	4.5.8
Continuous Air Monitor Alarm	4.5.9
Impenetrable Object/Stripped out Filter	4.5.10
WMF-634 Fire Alarm/Loss of Commercial Power	4.5.11
Deflagration with Sustained or Lasting Flames	4.5.12
Deflagration with No Evidence of Sustained or Lasting Flames	4.5.13
Drilling Drums for Primary or Secondary Filter Insertion	4.5.14
Pressing the Abort/Reset Buttons	4.5.15
Manual Operation of Doors and Conveyors	4.5.16
Manual Operation of Valves	4.5.17
Damaged Glove Change Out	4.5.18

4.5.2 Restraining Strap Removal for Venting Bulged Containers

4.5.2.1 Inform the ICS operator that bulged drums will be loaded onto the input queue conveyor and that
Switch 214-AC-MT001-PLG will be turned off.

WARNING

Roller conveyors can start at any time presenting pinch point and entrapment hazards to personnel.

4.5.2.2 **WHEN** turning off the conveyor switch and removing the straps,
THEN remain within arm's reach or line of sight of the conveyor switch.

4.5.2.3 Load the drums to the input queue,
AND turn off Switch 214-AC-MT001-PLG to remove the restraining straps.

4.5.2.4 Remove lid restraining straps from the drum(s).

4.5.2.5 **WHEN** the restraining straps are removed,
THEN perform the following:

4.5.2.5.1 Turn on Switch 214-AC-MT001-PLG.

4.5.2.5.2 Return control of the input queue to the ICS operator.

4.5.2.6 **IF** performing filter insertion,
THEN RETURN to Step 4.3.2
WITHOUT RETURNING TO this step.

4.5.3 Recovery from an E-Stop Condition

NOTE 1: *The recovery screen will automatically display on the DVS server operator control console computer terminal after a fault condition.*

NOTE 2: *The fault condition will also be observed on the DVS server operator control console computer terminal at the top of the screen, highlighted in bright red.*

4.5.3.1 **IF** the emergency condition has been eliminated,
THEN reset the "E-Stop" and the 24-VDC power supply.

4.5.3.2 Check the status of the system at the DVS server operator control console.

4.5.3.3 Perform **ONE** of the following:

4.5.3.3.1 **IF** the system was in a filter insertion sequence, **THEN** install a stub filter per the applicable steps of Section 4.5.10.

4.5.3.3.2 **IF** the system had **NOT** started the filter insertion sequence,
THEN click on "Continue."

4.5.4 Dropped Waste Container

NOTE: *Container may be moved when removal of container is necessary to recover the container or any spillage.*

4.5.4.1 Suspend all waste handling operations in the vicinity of the dropped container until the container has been recovered.

(RPT-NFCS-08, CWR 7.3.2, #3)

4.5.4.2 Place DVS in a stable condition.

4.5.4.3 Shut down transport equipment, if applicable.

4.5.4.4 Respond per INST-OI-11.

4.5.5 Contaminated Drum

4.5.5.1 Leave survey probe in DVS chamber, if applicable.

4.5.5.2 Perform self frisk with an alternate instrument.

4.5.5.3 Click on "Contaminated."

4.5.5.4 Notify SS and RCT.

4.5.5.5 SS and RCT: Ensure that the RCSS and IS/IH representatives are notified.

4.5.5.6 **IF** closure of survey door is unobstructed,
THEN click on "Survey Door Closed."

4.5.5.7 Ensure the Manual/Auto switch is placed in Manual.

4.5.5.8 RCT: Perform decontamination in accordance with INST-RS&C-6.22.2, Decontamination, Containing or Affixing of Contamination.

4.5.5.8.1 Cycle the survey door, as necessary, to support the decontamination process.

4.5.5.8.2 **WHEN** the drum is radiologically clean, **THEN** click on "Continue."

4.5.5.8.3 Ensure the Manual/Auto switch is placed in Auto.

4.5.5.8.4 Return to section previously performed.

4.5.6 Breached DVS Enclosure Glove

WARNING

Exiting the gloves greatly increases the potential for spread of contamination.

4.5.6.1 **IF** you are working in the enclosure gloves at the time of discovery of the breached glove,
THEN limit your movement.

4.5.6.1.1 Call for the immediate assistance of an RCT.

4.5.6.1.2 Perform a controlled exit from the enclosure gloves under the direction of the RCT.

4.5.6.1.3 Place a piece of tape over the gloveport to prevent any coworker from using it.

4.5.6.1.4 Contact the SS and RCT.

4.5.6.1.4.1 SS: Evaluate further actions in accordance with MP-COPS-9.7, Control of Equipment and Systems Status.

4.5.6.1.5 Change gloves per Section 4.5.18.

4.5.6.2 **IF** you are **NOT** working in the enclosure gloves at the time of discovery of the breached glove,
THEN perform the following:

4.5.6.2.1 Place a piece of tape over the gloveport to prevent any coworker from using it.

4.5.6.2.2 Contact the SS and RCT.

4.5.6.2.2.1 SS: Evaluate further actions in accordance with MP-COPS-9.7.

4.5.6.2.3 Change gloves per Section 4.5.18.

4.5.7 Breached Containment (including drums)

4.5.7.1 Suspend operations.

4.5.7.2 Place DVS in a stable condition.

4.5.7.3 Respond per INST-OI-11.

4.5.8 Loss of Characterization Facility EF-232-001 Extraction Fan

NOTE: *The EF-232-001 extraction fan is interlocked with the Drum Vent/Headspace Gas Sampling System. The fan has to be running for the process to be operational.*

4.5.8.1 Suspend operations.

4.5.8.2 Notify the RCT, IS/IH, and SS.

4.5.8.3 **WHEN** WMF-634 building ventilation is restored,
THEN resume normal operations by performing the following:

4.5.8.3.1 Clear the error message at the DVS server operator control console computer terminal.

4.5.8.3.2 Depress the green reset button.

4.5.9 Continuous Air Monitor Alarm

4.5.9.1 Suspend operations.

4.5.9.2 Place DVS in a stable condition.

4.5.9.3 Respond in accordance with MP-RS&C-6.12, Response to Abnormal Radiological Conditions.

4.5.10 Impenetrable Object/Stripped Out Filter

4.5.10.1 Press "Abort" to lower the drum and open the survey door.

4.5.10.2 Visually inspect the filter and/or drum lid.

4.5.10.3 Perform a direct scan survey of the filter insertion area.

4.5.10.3.1 **IF** contamination is found,
GO TO Section 4.5.5;
THEN RETURN TO Step 4.5.10.6.

4.5.10.4 Wearing appropriate PPE, remove drill filings using approved method.

4.5.10.5 Perform a swipe survey of the drum through the survey access door per radiological procedures.

4.5.10.5.1 **IF** contamination is found,
GO TO Section 4.5.5
THEN RETURN TO Step 4.5.10.6.

4.5.10.5.2 **IF** contamination is **NOT** found,
AND a tape press was used to remove the drill filings,
THEN remove the tape press from the drum lid
AND place it in a bag labeled in accordance with radiological procedures.

4.5.10.6 **IF** using NucFil-036-R-DA,
THEN perform the following:

4.5.10.6.1 Ensure the hole is 1 in. or greater, using a ruler and/or go/no-go gauge.

4.5.10.6.2 **IF** the hole is smaller than 1 in.,
THEN perform the following:

4.5.10.6.2.1 Notify the SS.

4.5.10.6.2.2 Initiate an NCR in accordance with MP-Q&SI-5.4
AND record the size of the hole on the NCR.

4.5.10.6.3 Manually install a NucFil-036-R-DA filter over the hole.

4.5.10.6.3.1 **IF** the first filter does **NOT** adhere,
THEN apply a second filter.

4.5.10.6.3.2 **IF** the second filter does **NOT** adhere,
THEN notify the SS.

4.5.10.6.4 Enter filter data into WTS "Container Filters" screen.

NOTE 1: *The operator may attempt to install another filter by choosing "Repeat Process" or "Back Out Drum" in the following steps.*

NOTE 2: *The operator may process another drum automatically into DVS by choosing "Return to ICS."*

4.5.10.6.5 Select **ONE** of the following options:

4.5.10.6.5.1 Press "Continue."

4.5.10.6.5.2 Press "Return to ICS."

OR

4.5.10.6.5.3 Press "Continue."

4.5.10.6.5.4 Press "Repeat Process."

4.5.10.6.5.5 **GO TO** Step 4.3.5 and attempt to install another filter **WITHOUT RETURNING TO** this step.

OR

4.5.10.6.5.6 Press "Continue."

4.5.10.6.5.7 Press "Back Out Drum."

4.5.10.6.5.8 **WHEN** the drum has stopped on the outer conveyor, **THEN GO TO** Step 4.3.5.1.1. **WITHOUT RETURNING TO** this step.

4.5.10.7 **IF** using a threaded filter, **AND IF** feasible, **THEN** perform the following:

4.5.10.7.1 Manually seat the filter.

4.5.10.7.1.1 Ensure the filter is tight and the O-ring gasket is compressed.

4.5.10.7.2 Survey hands and equipment used to tighten filter.

4.5.10.7.3 Enter filter data into WTS "Container Filters" screen.

4.5.10.7.4 **GO TO** Step 4.5.10.8.5 **WITHOUT RETURNING TO** this step.

4.5.10.8 **IF** the filter can **NOT** be manually seated, **THEN** notify the SS and RCT before proceeding with filter removal/containment and disposal.

4.5.10.8.1 RCT: Ensure the RCSS is notified.

4.5.10.8.2 RCT: Perform or direct surveys, as necessary, to characterize the status of the drum, lid, filter, and DVS enclosure.

4.5.10.8.2.1 Obtain pre-job, in-process, and post-job surveys per INST-RS&C-6.22.1.

4.5.10.8.3 Per supervision and RCT's guidance, remove the filter and install a stub filter of the appropriate diameter.

4.5.10.8.4 Enter filter data into WTS "Container Filters" screen.

NOTE 1: *The operator may attempt to install another filter by choosing "Repeat Process" or "Back Out Drum" in the following steps.*

NOTE 2: *The operator may process another drum automatically into DVS by choosing "Return to ICS."*

4.5.10.8.5 Select **ONE** of the following options:

4.5.10.8.5.1 Press "Continue."

4.5.10.8.5.2 Press "Return to ICS."

OR

4.5.10.8.5.3 Press "Continue."

4.5.10.8.5.4 Press "Repeat Process."

4.5.10.8.5.5 **GO TO** Step 4.3.5 and attempt to install another filter **WITHOUT RETURNING TO** this step.

OR

4.5.10.8.5.6 Press "Continue."

4.5.10.8.5.7 Press "Back Out Drum."

4.5.10.8.5.8 **WHEN** the drum has stopped on the outer conveyor, **GO TO** Step 4.3.5.1.1 **WITHOUT RETURNING TO** this step.

4.5.11 WMF-634 Fire Alarm/Loss of Commercial Power

4.5.11.1 Place DVS in a stable condition.

4.5.11.2 Evacuate WMF-634.

4.5.11.3 Notify the RCT and SS.

4.5.11.4 **WHEN** WMF-634 building ventilation is restored,
THEN resume normal operations by performing the following:

4.5.11.4.1 Clear the error message at the DVS server operator control console computer terminal.

4.5.11.4.2 Depress the green reset button.

4.5.12 Deflagration with Sustained or Lasting Flames

NOTE 1: *AMWTP personnel are not authorized to attempt extinguishing fires involving radiological or other hazardous materials.*

NOTE 2: *A deflagration with sustained or lasting flames is indicated by the observation of flames coming from the drum, drum contents, or the deflagration chamber and continuing to burn after the initial deflagration (i.e., momentary flames from the burn-off of flammable gas).*

4.5.12.1 Press the E-Stop button.

4.5.12.2 Immediately evacuate WMF-634.

4.5.12.3 Notify the INL Fire Department at 777.

4.5.12.4 Notify the RCT, SS, and IS/IH.

4.5.12.5 Complete the accountability for WMF-634.

4.5.12.6 **WHEN** directed by the SS,
THEN resume normal operations by performing the following:

4.5.12.6.1 Clear the error message at the DVS server operator control console computer terminal.

4.5.12.6.2 Depress the green reset button.

4.5.13 Deflagration with No Evidence of Sustained or Lasting Flames

NOTE 1: *AMWTP personnel are not authorized to attempt extinguishing fires involving radiological or other hazardous materials.*

NOTE 2: *Anticipated conditions produced from deflagration of a drum during drum venting operations (i.e., momentary flames from the burn-off of flammable gas) do not meet the criteria requiring emergency declaration, nor require activation of the AMWTP Emergency Control Center. This event does require implementation of MP-EP&C-12.4, Event Classification/Emergency Action Levels.*

(MP-EP&C-12.4)

NOTE 3: *A deflagration with no evidence of sustained or lasting flames is indicated by momentary flames from the burn-off of flammable gas.*

4.5.13.1 Suspend DVS operations.

4.5.13.2 Notify the SS/PSM.

4.5.13.3 RCT and IS/IH under the Supervision of the PSM or Designee: Characterize the condition of the drum and the deflagration chamber.

4.5.13.4 Ensure characterization includes the use of a tamper indicating device to determine when the drum has returned to ambient temperature.

4.5.13.5 Control access to the affected area as directed by an RCT and IS/IH.

4.5.13.6 **WHEN** directed by the SS,
THEN resume normal operations by clearing the error message at the DVS server operator control console computer terminal.

4.5.14 Drilling Drums for Primary or Secondary Filter Insertion

4.5.14.1 Perform Section 4.3 through Step 4.3.4.1 to import the drum into the DVS cabinet.

4.5.14.2 Ensure the system is in the filter insertion mode.

WARNING

The motion of the power head and drill motor may cause pinching/crushing of fingers.

NOTE: *The following steps implement alternate methods of hazardous energy control per MP-COPS-9.20.*

4.5.14.3 **WHEN** placing hands in the glove box gloves,
THEN observe that the "Power Head Blocked" message is displayed on the operator console.

4.5.14.3.1 **IF** the "Power Head Blocked" message is not displayed,
THEN remove hands from the gloves and notify the SS.

4.5.14.4 Insert the special tool, the modified short standard filter with drill bit tip for primary venting or the 3/8-in. drill manufactured to fit the power head collet and the length of a short standard filter for secondary venting, into the collet via the enclosure glove ports
AND press the close pushbutton inside the enclosure.

4.5.14.5 Ensure that the cabinet and survey doors are closed.

(RPT-TSR-03, SAC 5.2.7)

4.5.14.6 Click on the appropriate button on the DVS server operator control console screen and select "short standard."

4.5.14.7 Once the special tool is seated, observe the drum lowering and the survey door opening.

4.5.14.8 Perform a direct scan survey of the filter insertion area.

4.5.14.8.1 **IF** contamination is found,
GO TO Section 4.5.5;
THEN RETURN TO Step 4.5.14.11.

4.5.14.9 Wearing appropriate PPE, remove drill filings using approved method.

4.5.14.10 Perform a swipe survey of the drum through the survey access door per radiological procedures.

4.5.14.10.1 **IF** contamination is found,
GO TO Section 4.5.5;
THEN RETURN TO Step 4.5.14.11.

4.5.14.10.2 **IF** contamination is **NOT** found,
AND IF a tape press was used to remove the drill filings,
THEN remove the tape press from the drum lid
AND place it in a bag labeled in accordance with radiological procedures.

4.5.14.11 Perform **ONE** of the following using the tools provided:

4.5.14.11.1 Remove the special tool and install the stub filter for primary venting.

OR

4.5.14.11.2 Tap and install the carbon filter for secondary venting.

4.5.14.12 **IF** secondary venting was performed,
THEN perform the following:

4.5.14.12.1 Survey the tap and tap handle.

4.5.14.12.1.1 Handle material as appropriate per radiological safety procedures.

4.5.14.13 Place the special tool in a bag, tape the bag shut, and transfer back to the enclosure.

4.5.14.14 Press the button for the applicable filter installed into the drum.

4.5.14.15 Ensure that the filter model is correct in the pop-up window and then press "Close."

4.5.14.16 Complete Steps 4.3.19 and 4.3.20 to export the drum.

4.5.15 Pressing the Abort/Reset Buttons

NOTE: *There are many dialog pop-up prompts that have an abort option as well as the green reset button on the operating panel. Upon clicking the abort button, any sequences that were running will stop, the drum will lower, and the survey door will open.*

4.5.15.1 **IF** a filter is lying on the top of the drum,
THEN retrieve the filter and set it aside.

4.5.15.2 **IF** a drilling process was in operation,
THEN perform the following:

4.5.15.2.1 Perform a direct scan survey of the filter insertion area.

4.5.15.2.1.1 **IF** contamination is found,
GO TO Section 4.5.5;
THEN RETURN TO
Step 4.5.15.2.4.

4.5.15.2.2 Wearing appropriate PPE, remove drill filings using approved method.

4.5.15.2.3 Perform a swipe survey of the drum through the survey access door per radiological procedures.

4.5.15.2.3.1 **IF** contamination is found,
GO TO Section 4.5.5;
THEN RETURN TO
Step 4.5.15.2.4.

4.5.15.2.3.2 **IF** contamination is **NOT** found,
AND IF a tape press was used to remove the drill filings,
THEN remove the tape press from the drum lid
AND place it in a bag labeled in accordance with radiological procedures.

4.5.15.2.4 Click Continue.

4.5.15.3 Select **ONE** of the following options:

4.5.15.3.1 **IF** it is desired to rotate the drum,
THEN select "Realign Drum" and perform the following:

4.5.15.3.1.1 Select "Back Out Drum" to export the drum to the stub conveyor.

4.5.15.3.1.2 Reposition the drum as necessary.

4.5.15.3.1.3 Select "Bring In Drum" to import the drum into the DVS cabinet
AND RETURN TO Step 4.3.4.

4.5.15.3.2 **IF** it is desired to repeat the filter installation process,
THEN select "Repeat Process"
AND RETURN TO Step 4.3.6.

4.5.15.3.3 **IF** it is desired to export the current drum,
THEN select "Return Drum to Main Conveyor"
AND RETURN TO Step 4.3.1.

4.5.16 Manual Operation of Doors and Conveyors

NOTE 1: *There are instances when the operator may want to manually import or export a drum, as well as manually operating hardware to recover from unexpected occurrences.*

NOTE 2: *The doors and conveyors can only be run manually when the system is in manual. Interlocks will prevent the doors from opening when the drum is raised. Interlocks will prevent the conveyors from moving a drum into a closed door or continue to move the drum into the chamber after the photoelectric cell has been broken.*

NOTE 3: *The manual control pop-up window can also be opened by clicking on the diagnostics pull down menu and selecting "Doors and Conveyors."*

4.5.16.1 Switch system into MANUAL mode and the manual control pop-up window will open.

NOTE: *The following indicator lights will appear after clicking the button to run the conveyors in forward, reverse, or to stop:*

- *While the command is being sent, the button will turn green.*
- *When the conveyor is actually moving, the indicator light will turn green.*
- *If the conveyors are stopped, the indicator light will turn red.*

4.5.16.2 Click on the appropriate button to run the conveyors in forward, reverse, or to stop.

NOTE: *While the command is being sent to open or close the doors, the button will be green. When the door reaches an opened or closed state, the indicator light will turn green.*

4.5.16.3 Click the appropriate button to open or close the doors.

4.5.17 Manual Operation of Valves

NOTE 1: *There are instances when the operator may want to manually open and close valves to conduct maintenance activities as well as recovering from unexpected occurrences.*

NOTE 2: *The valves can only be manipulated manually when the system is in manual, a GCMS machine has not been selected, and the* headspace *(see def.) gas sample routines are not running.*

4.5.17.1 Switch system into MANUAL mode.

4.5.17.2 Open the manual control valves pop-up window by clicking on the diagnostics pull down menu and selecting "Valves."

NOTE: *If the valve is open, the OPEN button will be green. If the valve is closed, the CLOSED button will be red.*

4.5.17.3 Click the appropriate button to open or close valves.

4.5.18 Damaged Glove Change Out

4.5.18.1 **WHEN** evolution is to be performed,
THEN contact the SS.

4.5.18.2 Contact radiological safety for coverage.

4.5.18.3 **IF** damaged glove change out is required;
THEN use a double set of PPE (e.g., double gloves/double sleevettes).

4.5.18.4 Obtain new gloves from warehouse (preferably 30-mil ambidextrous).

4.5.18.5 Ensure no drum is present in DVS chamber during glove change out evolution.

4.5.18.6 Perform survey on exposed glove surface, glove ring, and adjacent glove box surfaces.

4.5.18.6.1 **IF NO** contamination is found,
THEN continue with glove removal.

4.5.18.6.2 **IF** contamination is found.
THEN consult with radiological safety before continuing.

4.5.18.7 Remove damaged glove by squeezing air out of glove and taping off as close to port ring as possible.

4.5.18.8 Loosen port ring/metal clamp and remove.

4.5.18.9 Remove rubber band from port ring.

4.5.18.10 Remove glove and place in radiological disposal bag.

4.5.18.10.1 Dispose of gloves as secondary waste per INST-OI-24, and the applicable HWD (070505-02).

4.5.18.11 Perform contamination survey inside of glovebox.

4.5.18.11.1 **IF NO** contamination is found,
THEN continue.

4.5.18.11.2 **IF** contamination is found,
THEN consult radiological safety before continuing.

4.5.18.12 Place open end of the new glove over the port with the thumb pointed upward.

4.5.18.13 Place rubber band on the outside of the glove over the port ring.

4.5.18.14 Place port ring/metal clamp over the rubber band and tighten.

4.5.18.15 Initial and date glove with a permanent marker next to the port ring/metal clamp and push the glove into the glove chamber.

4.6 Post-Job Review

4.6.1 SS or designee: Perform a post-job review in accordance with MP-COPS-9.17.

5.0 DEFINITIONS

Headspace. For any volume contained by a drum, 55-gallon poly bag, or innermost layer of confinement, the total contained volume minus the volume occupied by the waste material. "Headspace" is also used to refer to the gases contained in this volume.

Impenetrable object. An impenetrable object is a drum vent system software trip that stops a filter insertion process when the filter insertion power head load cell reaches 300-lb force. It is possible that the filter may still be inserted the remainder of the distance necessary for proper seating by manual means.

6.0 REFERENCES

(1) 29 CFR 1910.147, The Control of Hazardous Energy (Lockout-Tagout)

(2) ANSI Z244.1, Control of Hazardous Energy Lockout/Tagout and Alternative Methods

(3) INST-OI-11, Waste Container Handling

(4) INST-OI-24, Packaging Radioactive Waste

(5) INST-OI-33, Characterization Facility HVAC System Operations

(6) INST-RS&C-6.22.1, Radiological Surveys

(7) INST-RS&C-6.22.2, Decontamination, Containing or Affixing of Contamination

(8) MP-COPS-9.7, Control of Equipment and Systems Status

(9) MP-COPS-9.17, Performing Pre-Job Briefings and Post-Job Reviews

(10) MP-COPS-9.20, Hazardous Energy Control Processes

(11) MP-DOCS-18.2, Records Management

(12) MP-EP&C-12.4, Event Classification/Emergency Action Levels

(13) MP-RS&C-6.12, Response to Abnormal Radiological Conditions

(14) MP-Q&SI-5.4, Identification of Nonconforming Conditions

(15) MP-TRUW-8.1, Certification Plan for INL Transuranic Waste

(16) RPT-NFCS-08, Criticality Safety Evaluation for AMWTP Retrieval Operations

(17) RPT-TSR-03, Technical Safety Requirements

7.0 RECORDS

Records generated by this procedure are classified in accordance with the table below and dispositioned in accordance with MP-DOCS-18.2, Records Management.

Record Description	Classification
INST-OI-45, Case File	Nonpermanent WIPP/ENV1-J-1/Destroy 10 years after submittal
Form-1603, Filter Insertion Record	Both Facility Operating Record/Nonpermanent WIPP/ENV2-a-1-a/Destroy 5 years after Life of Facility

8.0 EXHIBITS

None

9.0 APPENDIXES

Appendix A – Revision Log

Appendix A – Revision Log

Revision Number	Date Approved	Pages Affected	Description of Revision
0	03/24/04	All	DCR-2757, Initial issue.
1	07/21/04	Page 18 Section 6 4.6, NOTE 2 Page 6	DCR-3141. Add steps to Section 4.7.3 for clarification. Modify Exhibit Change Note 2 to read: "Throughput on the DVS is restricted to a running total of 560 drums per calendar week." Delete 'Long standard filter' paragraph at bottom of Page 6 Incorporate FC-1, FC-2, FC-3, FC-4. Section 4.6.11.2: Changed THEN statement to read: "THEN proceed to Section 4.8.9." Section 4.8.9.2 Change last THEN statement to read: "**THEN**, wearing appropriate PPE, manually install the filter, if able, **OR** Remove the filter and install a Stub filter of the appropriate diameter."
2	10/14/04	Various	DCR-3362. Deleted note above Step 4.6.9. Revised Step 4.6.9. Made some editorial changes.
3	11/04/04	Various	DCR-3388. Revised Standard Filter section under Section 4.1, Step 4.6.11.1, and Exhibit 6.1 to include information on long standard filters (as a result of Waste Stream 835, long standard filters are being used).
3FC-1	11/19/04	13, 18, 26	DCR-4027. Delete 4.6.2 and 4.6.16. Change 4.6.17 to read, "Enter data on AMWTP Form-1603, Filter Insertion Record, and into WTS "Filter Update" screen. Delete Form-1449 and Form-1600 from the Records Section.

AMWTP OPERATING INSTRUCTION		
INST-OI-45, Rev. 20	Issued: 07/25/14	Effective: 07/25/14 @ 1300 hr

Drum Filter Installation

Revision Number	Date Approved	Pages Affected	Description of Revision
3FC-2	11/27/04	17, 22, 23	DCR-4031. Delete 4.8.9.3 and 4.8.9.5. Change 4.6.12.2 to read "section 4.8.9 rather than 4.8.9.1.
4	12/2/04	Various	DCR-4040. Incorporate 3 FC-1 and 3 FC-2. Add new section, "Drilling Drums for Primary or Secondary Filter Insertion." Incorporate other procedure steps necessitated by SCR-1386.
5	1/26/05	26	DCR-4104. Revise Step 4.8.13.11; add two new steps: 4.8.13.12, "Verify the filter model is correct in the pop-up window and press "Close"; renumber Step 4.8.13.13: "Complete Steps 4.6.15 and 4.6.16 to export drum." Revise Exhibit to include Direct Sample Filter; Add heading and paragraph for Direct Sample Filters to Page 6. Also Revise Standard Filter paragraph to read five cycles. Page 15: Revise first step of sequence.
5 FC-1	2-10-05	17	Add new Step 4.8.9.4 to read: Enter data to Form-1603, Filter Insertion Record, and into WTS filter.
5 FC-2	11/4/05	10.15	Changed visual verification of drum/seal contact and clarified direction for glove changeout.
6	12/01/05	All	DCR-4230. Incorporated FC-1 (DCR-4146) and FC-2 (DCR-4230-1). Added information to clarify what constitutes an impenetrable object. Restructured sections to provide ease of work flow. Added steps to provide appropriate steps to prevent personnel contamination. Incorporated FMP-329 information. Updated procedure to MP-DOCS-18.1 format.
6 FC-1	12/31/05	15	DCR-4716. Correct flow of procedure for recovery from Impenetrable Object.

AMWTP OPERATING INSTRUCTION		
INST-OI-45, Rev. 20	Issued: 07/25/14	Effective: 07/25/14 @ 1300 hr
Drum Filter Installation		

Revision Number	Date Approved	Pages Affected	Description of Revision
7	12/16/06	Various	DCR-5013. Incorporate FC-1 and steps for clarification, to allow for smoother flow of the insertion process, provide direction for drums with lid restraints, remove unnecessary steps, allow for multiple options.
8	04/02/07	Step 4.4.3, 4.6.1, 4.6.9.7.4, 4.6.10.1	DCR-5816. Incorporate changes to resolve CBFO comments. Formatting and editorial changes for consistency to MP-DOCS-18.1, 18.4.
9	08/27/07	Various	DCR-6231. Add section to perform IDC 003 filtering process.
9 FC-1	04/04/08	Pg 6	DCR-6987. Change the 1st stage HEPA magnehelic gauge to show PDI-220-003.
9 FC-2	4/25/08	10, 17, 30	DCR-7090. Add UT9413 as approved filter per FMP-0635; and clarify instruction for NF036 filter.
9 FC-3	5/14/08	Pg 30	DCR-7158. Add UT9412 as approved filter per FMP-0385.
10	10/02/08	Various	DCR-7535. Incorporated FCs 1, 2, 3; replaced NF-036 with NucFil 036-R-DA. Incorporated DCR-6811 Blue Sheet changes for Ops Restructuring (STL/SS; SM/PSM, etc.); editorial/formatting changes incorporated for consistency with MP-DOCS-18.1 and -18.4
11	01/15/09	Pg 2	DCR-7848. Changes made to implement the current DSA.
11 FC-1	09/16/09	Pgs 2 & 8	DCR-8660. Restrictions for drum from cargo containers.
12	11/24/09	Pgs 1-4, 7, 8, 10	DCR-8570. Incorporated DCR-8660 Rev. 11 FC-1. Implemented new hazardous assessment findings. Incorporated Blue Sheet 02 changes; made editorial changes for consistency with MP-DOCS-18.1. Periodic review.

AMWTP OPERATING INSTRUCTION		
INST-OI-45, Rev. 20	Issued: 07/25/14	Effective: 07/25/14 @ 1300 hr

Drum Filter Installation

Revision Number	Date Approved	Pages Affected	Description of Revision
12 FC-1	05/10/10	Pg 2	DCR-9212. Added Step 3.1.7 to resolve CAR 49662, incorporating alternative isolation device information to procedure.
13	10/18/10	Pg 2	DCR-9500. Incorporated DCR-9212 to make field change permanent.
14	03/01/11	3.1.6	DCR 9836. Annual TSR update, remove word "previously."
15	05/12/11	Pg 30	DCR-9982. Revised to add instruction for changing out gloves and to redesignate as Controlled Activity."
16	09/14/11	Page 7	DCR-10331. DCR-10331. Changed step 4.3.2 per CAR 63176, added roll down references for Hazard Assessment implementing steps.
16 FC-1	09/17/11	Page 2	DCR-10442. Deleted Step 3.2.6 and removed DS-220-001 in step 3.2.7.
17	08/08/12	Pages 10 and 24	DCR-11215. Incorporated DSA changes and 16 FC-1 (DCR-10442).
18	11/26/12	Various	DCR-11838. Implemented risk assessment N-634-DVS-01, Rev. 0. Incorporated ITG-Bluesheet-020.
19	12/19/13	Step 4.3.2	DCR-12891. Deleted step 4.3.2 and associated warning: WTS already performs this function and will not allow a drum to enter DVS if it is a potential pyrophoric drum. Use type changed from Controlled Activity to General Use.
20	07/25/14	Various	DCR-13547. Added Step 3.1.9 and 3.1.10 per FMP-1404. Various changes made throughout procedure to support hydraulic oil solidification project; FMP-1413 for oil drums.

WMF-615 Filter Insertion Operations

(Controlled Activity)

Advanced Mixed Waste Treatment Project

Approval:

(*Signature on file. See DCR-13443.*) 08/25/14
Date

Verification of Effective Revision: (After verifying current revision, replace cover page on working copy if more space is needed.)

Initials	Date	Initials	Date	Initials	Date	Initials	Date

AMWTP INSTRUCTION		
INST-OI-50, Rev. 18	Issued: 08/25/14	Effective: 08/26/14
WMF-615 Filter Insertion Operations		

TABLE OF CONTENTS

1.0 PURPOSE/SCOPE 1
2.0 ROLES AND RESPONSIBILITIES 1
3.0 PRECAUTIONS AND LIMITATIONS/PREREQUISITES 2
3.1 Precautions and Limitations 2
3.2 Prerequisites 2
4.0 INSTRUCTIONS 3
4.1 General 3
4.2 Drum Vent Facility Startup 5
4.3 Loading Drums on the Conveyor 7
4.4 Punch and Filter Insertion Operations 9
4.5 Survey Station Activities 11
4.6 Unloading Drums from the Conveyor 12
4.7 End-of-Shift Activities/Drum Vent Facility Shutdown 13
4.8 Post-Job Review 14
4.9 Abnormal and Infrequent Operations 15
5.0 DEFINITIONS 24
6.0 REFERENCES 24
7.0 RECORDS 25
8.0 EXHIBITS 25
9.0 APPENDICES 25
Appendix A – Revision Log A1

AMWTP INSTRUCTION		
INST-OI-50, Rev. 18	Issued: 08/25/14	Effective: 08/26/14
WMF-615 Filter Insertion Operations		

1.0 PURPOSE/SCOPE

This procedure provides instructions for the remote venting and installation of filters in waste drums using the Drum Vent Facility (DVF), WMF-615.

This procedure applies to AMWTP personnel qualified to operate this system.

2.0 ROLES AND RESPONSIBILITIES

Performer	Responsibilities
Operations Technician (OT)	• Unless otherwise specified, performs the steps in this instruction • Performs limited radiological surveys.
Radiological Controls Technician (RCT)	• Performs and evaluates radiological surveys • Performs characterization and decontamination.
Industrial Safety/Industrial Hygiene (IS/IH)	• Performs characterization for hazards other than radiological.
Shift Supervisor (SS)	• Ensures that the radiological controls shift supervisor (RCSS) and IS/IH representatives are notified in the event of a contaminated drum • Performs post-job reviews • Initiates nonconformance reports (NCRs).
Authorized Employee (AE)	• Performs an LO/TO per INST-COPS-9.20.1, Lockout/Tagout.

3.0 PRECAUTIONS AND LIMITATIONS/PREREQUISITES

3.1 Precautions and Limitations

3.1.1 SS and RCSS approvals must be obtained for examining, storing, or inserting filters in waste drums that exceed contact radiation levels of 200 mR/hr.

3.1.2 To avoid sprains and strains, proper techniques and/or mechanical aids are used when manually positioning drums or *filter insertion machine* (FIM; see def.) table.

3.1.3 Throughput on the DVF is restricted to a total of 100 drums per day.

(AJD-255-2004, Category 1, Level 1 Exemption from a Permit to Construct)

3.1.4 Conveyors and doors present pinch points and entrapment hazards to personnel. Personnel must stay clear of conveyors and motor-driven doors during operations and use the emergency cords and/or safety mats to shut down the conveyor in case of an emergency.

3.1.5 The use of hand tools requires that safety glasses and appropriate gloves be used per MP-ISIH-2.30, Hand and Power Tools. Safety glasses do not need to be worn when operating via gloves in survey station.

3.1.6 Alternative methods for hazardous energy control are used in this procedure for servicing tasks that are routine, repetitive, and integral to the use of the equipment for production in accordance with MP-COPS-9.20, Hazardous Energy Control Processes.

3.1.7 Due to ergonomic considerations at the survey station, the survey station operator shall be switched out every 4 hours or 16 drums processed, whichever is encountered first.

3.2 Prerequisites

3.2.1 WMF-615 sweep and exhaust fans are available.

3.2.2 WMF-635 ventilation is running.

3.2.3 The following equipment, parts, and supplies are readily available, as applicable:

A. Appropriate gloves

B. Sleevettes and cotton liners

C. Filters

D. Tools necessary to tighten filter

E. Radio

F. Barcode scanner

G. Currently calibrated radiological instrumentation

- One contamination swipe counter
- One alpha survey instrument
- Silo continuous air monitor (CAM)
- Survey station CAM.

3.2.4 The following instruments have a current calibration sticker:

- DVE-PDT-1501 (on stack)
- DVE-PDT-1502 (across DVE-HEPA-1501)
- DVE-PDI-1501 (silo pressure)
- DVE-PDI-1505 (sweep filter DVE-HEPA-1506).

3.2.5 DVE-HEPA-1501 has a current in-place leak test label.

3.2.6 The DVF silo access door is shut with bolts tightened.

(RPT-TSR-03, SAC 5.2.7)

3.2.7 A pre-job brief has been performed in accordance with MP-COPS-9.17, Performing Pre-Job Briefings and Post-Job Reviews, as directed by SS prior to performing work in this procedure.

4.0 INSTRUCTIONS

4.1 General

4.1.1 **IF** required to leave the control room during filter insertion operations, **THEN** log out of the Integrated Control System (ICS) workstation.

4.1.2 **IF** more than one container is identified with the same AMWTP barcode label identification numbers,
THEN notify the SS.

4.1.2.1 SS or Designee: Immediately generate an NCR against all affected barcode numbers per MP-Q&SI-5.4, Identification of Nonconforming Conditions,
AND attach an NCR tag to the container.

(RPT-TSR-03, LCO 3.6)

NOTE: *Items being included in the NCR disposition are not to be performed by the SS or designee at this time.*

4.1.2.1.1 **WHEN** writing the NCR,
THEN include the following in the "Disposition Description or CAP" block of the NCR:

- Use available information (move sheets, historical information, etc.) to determine barcode number of the container
- Record any historical information available on the WTS container screen
- Historical ID number from container will be removed by AK personnel or via SDCR prior to inactivating the container/barcode numbers in WTS
- Inactivate the container/barcode numbers in WTS
- Recreate the container in WTS with a new barcode number using the historical information noted above
- Disposition **WILL NOT** be implemented until QA concurrence is received.

NOTE 1: *Performer may go to Section 4.9 at anytime in this procedure to respond to abnormal events.*

NOTE 2: *Sections 4.3, 4.4, 4.5, and 4.6 may be performed concurrently.*

4.1.3 **GO TO** the appropriate procedure section from the following table based on the desired task to be performed,
THEN RETURN TO this step until all appropriate operations have been performed.

Task	Section
Drum Vent Facility Startup	4.2
Loading Drums on the Conveyor	4.3
Punch and Filter Insertion Operations	4.4
Survey Station Activities	4.5
Unloading Drums from the Conveyor	4.6
End-of-shift Activities/Drum Vent Facility Shutdown	4.7
Post-Job Review	4.8
Abnormal and Infrequent Operations	4.9

4.2 Drum Vent Facility Startup

4.2.1 **IF** returning to this Section from a silo entry,
THEN perform applicable steps **ONLY** to restart DVF.

4.2.2 Ensure filters are in the HOPPER, as applicable.

4.2.2.1 **IF** an entry into the silo is needed to load filters into the hopper,
GO TO Section 4.9.13 to enter the silo;
THEN RETURN TO Step 4.2.3.

NOTE: *There are emergency stops at the following locations:*

- *Behind the FIM*
- *The top side left side of the personnel access door entering the containment silo*
- *The left side of the containment silo window at the operator station*
- *On the silo side of the survey station platform.*

4.2.3 Ensure the emergency stops are **NOT** tripped.

4.2.4 Ensure the 480-V power is turned ON with the main disconnect switch N-DSWM-1504.

4.2.4.1 Press the reset button FIM-CK-1501.

4.2.5 Ensure the ICS workstation is turned ON.

4.2.6 Log into Windows.

4.2.7 Select DVF icon on desktop.

4.2.8 Log in to the DVF Client Application.

4.2.9 Ensure the safety mats are reset.

4.2.10 Push the green reset button DVC-CK-1501.

4.2.11 Ensure that the tracking map is correct.

4.2.11.1 **GO TO** Section 4.9.3, as necessary, to update the tracking map;
THEN RETURN TO Step 4.2.12.

4.2.12 Ensure all device faults have been cleared.

4.2.12.1 **IF** the EXHAUST FAN is faulted
AND the fault will **NOT** clear,
THEN press START button DVE-CK-1501
AND attempt to reset the fault again.

4.2.13 Ensure the system is in auto mode and the Master Scheduler is RUNNING.

4.2.14 Select sequence 500 FIM STARTUP.

4.2.14.1 Ensure the HYDRAULIC PUMP is RUNNING.

4.2.14.2 Ensure the FIM Z-Axis is AT FULLY RAISED.

4.2.14.3 Ensure the proper drum size is selected using the drum selection prompt.

4.2.14.4 Ensure the proper filter insertion method is selected using the filter insertion method prompt.

4.2.14.5 Push the manual Sweep Fan DVE-CK-1502 START button **AND** ensure sweep fan is running.

4.2.14.5.1 Acknowledge the Sweep Fan Confirmation Prompt.

4.2.14.6 Ensure the stack EXAUST FAN has been started.

4.2.14.6.1 **IF** stack airflow is less than 800 cfm for 30 seconds,
THEN contact SS.

4.2.14.7 **IF** the "Way Lube Operation" prompt appears,
THEN select YES to operate the way lube,
OR select NO to proceed without operating the way lube.

4.2.15 Inspect the glove port gloves.

4.2.15.1 **IF** the gloves do **NOT** pass the inspection,
THEN replace the gloves in accordance with Section 4.9.15 or 4.9.16.

4.2.16 Ensure Sections 1, 2, and 3 of Form-1600, WMF-615 Filter Insertion Operations Checklist, are completed.

4.3 Loading Drums on the Conveyor

4.3.1 Wear appropriate gloves when handling waste drums.

NOTE: *In case of an emergency, the emergency cords located along the inlet and outlet conveyors are used to stop the conveyors.*

4.3.2 Ensure CVS-DOR-1501 is in the OPEN position.

4.3.3 Ensure the system is in auto mode and that the Master Scheduler is RUNNING.

4.3.4 Ensure switch CVS-VSW-1509 is in the DISABLE position and the green conveyor indicating light is illuminated.

4.3.5 **IF** the candidate drum is a Central Characterization Project item description code (IDC),
THEN verify by visual inspection that the candidate drum is linked to the correct historical data by comparing tamper-indicating device, D-number, and/or historical ID, as applicable, between the actual drum and the historical data display in Waste Tracking System (WTS).

4.3.5.1 **IF** the correct link is confirmed,
THEN load the drum to vent.

4.3.5.2 **IF** the correct link is **NOT** confirmed,
THEN notify the SS.

4.3.5.3 SS: **IF** unable to correct link,
THEN initiate a NCR in accordance with MP-Q&SI-5.4.

4.3.5.3.1 Record all historical information from the container on the NCR.

4.3.5.3.2 Assign the NCR to the acceptable knowledge expert.

WARNING

Conveyors and doors can operate at any time presenting pinch point and entrapment hazards to personnel.

4.3.6 Ensure personnel stay clear of conveyors and motor-driven doors.

4.3.7 Clean the punching area of the drum lids away from the closure ring bolt, as necessary.

WARNING

Eye damage may result from using a barcode reader.

4.3.8 Avoid looking directly at the scanning beam of the barcode reader.

4.3.9 Send and receive drums to WMF-615.

4.3.10 Load up to four 83-gal or five 55-gal drums on the LOADING CONVEYOR.

4.3.10.1 Ensure drums are loaded onto the conveyor so they will be punched in a clean flat area approximately 4 to 6 in. away from the drum edge.

4.3.10.2 Ensure the closure ring bolt is on the west 1/2 of the drum when loading onto the conveyor.

4.3.11 Turn switch CVS-VSW-1509 to ENABLE.

4.3.12 **REPEAT** Steps 4.3.4 through 4.3.11, as necessary, to fill input conveyors and the ZONE CONVEYOR.

4.3.13 Ensure restraining straps are removed from bulged drums per Section 4.9.14 as needed.

4.3.14 Perform a tracking map update per Section 4.9.3 as necessary.

4.4 Punch and Filter Insertion Operations

NOTE: *Sections 4.4 and 4.5 may be performed concurrently.*

4.4.1 Ensure no personnel are in the silo.

(RPT-TSR-03, SAC 5.2.7)

4.4.2 Ensure the system is in auto mode and that the Master Scheduler is RUNNING.

4.4.3 Ensure the proper drum size is selected.

4.4.4 Ensure the FIM equipment is properly configured for the selected drum size.

4.4.5 Ensure the proper filter insertion method is selected.

NOTE: *Sequence 240 for receiving a drum into the silo can be initiated using the RECEIVE DRUM INTO SILO button or by selecting the sequence from the Master Scheduler.*

4.4.6 Initiate Sequence 240.

4.4.7 Ensure a drum is imported into the silo and that the silo inlet and outlet doors are closed**.**

(RPT-TSR-03, SAC 5.2.7)

NOTE: *Sequence 510 for punching a drum can be initiated using the START FIM CYCLE button or by selecting the sequence from the Master Scheduler.*

4.4.8 Initiate Sequence 510.

4.4.9 Ensure the drum is successfully punched.

NOTE: *If the filter insertion method is set to automatic, Sequence 520 will automatically initiate to insert a filter once Sequence 510 completes.*

4.4.10 **IF** a filter is to be inserted by the FIM,
THEN ensure Sequence 520 is initiated and that a filter is successfully inserted.

4.4.11 Ensure the Z-Axis is in the fully raised position.

4.4.12 Ensure no drum is at the survey station.

NOTE: *Sequence 300 for discharging a drum from the silo can be initiated using the DISCHARGE DRUM FROM SILO button or by selecting the sequence from the Master Scheduler.*

4.4.13 Initiate Sequence 300.

4.4.14 Ensure that the drum is exported from the silo and that the silo outlet door is closed.

4.4.15 **IF** a filter was installed by the FIM,
THEN record applicable information into WTS "Container Filters" screen or Form-1603, Filter Insertion Record.

4.4.16 **REPEAT** Section 4.4, as needed.

4.5 Survey Station Activities

NOTE: *Radiological personal protective equipment of gloves/sleevettes and labcoat, as a minimum, is required for glovebox work. Appropriate gloves are worn over glovebox gloves for handling filters and tools.*

4.5.1 **IF** a filter was installed by the FIM,
THEN perform the following:

4.5.1.1 **IF** the filter washer is loose,
THEN tighten the filter until the washer does **NOT** rotate.

4.5.1.2 **IF** the filter is missing or was improperly installed,
THEN perform the following:

4.5.1.2.1 Remove the filter, if necessary.

4.5.1.2.2 **IF** a normal size filter can be installed,
THEN perform the following:

4.5.1.2.2.1 Tap the hole with a 7/16-in. tap.

4.5.1.2.2.2 Install the normal size filter.

4.5.1.2.3 **IF** a normal size filter **CANNOT** be installed,
THEN perform the following:

4.5.1.2.3.1 Tap the hole with a 1/2-in. tap.

4.5.1.2.3.2 Install an oversized filter.

4.5.1.2.4 **IF** an oversized filter **CANNOT** be installed,
THEN perform the following:

4.5.1.2.4.1 Clean the area around the punched hole.

4.5.1.2.4.2 Install a NucFil 036 filter over the punched hole.

4.5.2 **IF** the drum was punched without a filter installation,
THEN perform the following:

4.5.2.1 **IF** the container has a shower cap,
THEN smooth out the plastic around the punched hole.

4.5.2.2 **IF** the container does **NOT** have a shower cap,
THEN clean the area around the punched hole, if necessary.

4.5.2.3 Install a NucFil 036 filter over the punched hole.

4.5.3 Perform a swipe contamination survey of the top of the drum.

NOTE: *Direct scan survey is solely used to identify gross contamination.*

4.5.4 Perform a direct scan survey of the swipe prior to removal from transfer tray.

4.5.4.1 **IF** contamination is found,
THEN perform the following:

4.5.4.1.1 Close the transfer tray.

4.5.4.1.2 **GO TO** Section 4.9 to perform the appropriate activities for the contaminated drum;
THEN RETURN TO Step 4.5.5.

4.5.5 Record survey results on Form-1129, Radiological Survey Report and Map.

4.5.6 **IF NOT** already performed,
THEN record filter information into WTS "Container Filters" screen or Form-1603.

4.5.7 Coordinate with the DVF operator to discharge the drum from the survey station.

4.5.8 **REPEAT** Section 4.5 as needed.

4.6 Unloading Drums from the Conveyor

4.6.1 Ensure appropriate gloves are worn for waste drum handling.

4.6.2 Ensure the system is in auto mode, and that the Master Scheduler is RUNNING.

4.6.3 Perform tracking map update per Section 4.9.3 as needed;
THEN RETURN TO Step 4.6.4.

4.6.4 **IF** it is necessary to perform manual moves,
GO TO Section 4.9.2 for manual operations;
THEN RETURN TO Step 4.6.5.

4.6.5 If necessary, initiate Sequence 330 to advance drums to the output conveyor(s).

4.6.6 Ensure drums have advanced to the unloading conveyor.

4.6.7 Turn switch CVS-VSW-1513 to the DISABLE position.

NOTE: *If switch CVS-VSW-1513 is in the DISABLE position for 30 seconds and the photo eyes on the unloading conveyor are not blocked, the tracking map will automatically be updated to show the removal of the drums from the unloading conveyor.*

4.6.8 Ensure all drums are removed from the unloading conveyor.

4.6.9 Ensure the tracking map is updated to show the removal of the drums.

4.6.10 Turn switch CVS-VSW-1513 to the ENABLED position.

4.6.11 Repeat Steps 4.6.3 through 4.6.10 as needed.

4.7 End-of-Shift Activities/Drum Vent Facility Shutdown

4.7.1 Ensure the system is in auto mode and that the Master Scheduler is RUNNING.

4.7.2 Ensure the drum has been discharged from the silo and survey station.

4.7.3 Initiate Sequence 330, as needed, to advance drums to the output conveyor(s).

4.7.4 Initiate Sequence 530 FIM SHUTDOWN,
AND perform the following:

4.7.4.1 Ensure the Z-Axis is at the fully raised position.

4.7.4.2 Ensure the hydraulic pump is stopped.

4.7.4.3 Ensure that at least 10 minutes has elapsed since the last drum was punched;
THEN ensure that the EXHAUST FAN is stopped.

4.7.4.4 Push the manual Sweep Fan DVE-CK-1502 STOP button **AND** ensure that the sweep fan stops.

4.7.4.4.1 Acknowledge the "Sweep Fan Stopped" prompt.

4.7.5 Abort the Master Scheduler.

4.7.6 Log out of the ICS workstation.

4.7.7 **IF NOT** already completed,
THEN enter data from Form-1603 into WTS "Container Filters" screen.

4.7.8 **IF** being relieved,
THEN STOP
AND perform watch turnover.

4.7.9 Ensure the cleanliness of the general area of WMF-615 is maintained.

4.7.10 Ensure radiological and hazardous mixed low-level waste has been disposed of in accordance with INST-OI-24, Packaging Radioactive Waste, and the applicable hazardous waste determination (HWD).

4.8 Post-Job Review

4.8.1 SS: Perform a post-job review in accordance with MP-COPS-9.17.

4.9 Abnormal and Infrequent Operations

4.9.1 **GO TO** the appropriate procedure section from the following table based on the desired task to be performed,
THEN RETURN TO this step until all appropriate operations have been performed:

Task	Section
Manual Operation of DVF Equipment	4.9.2
Tracking Map Update	4.9.3
Loss of Power to DVF	4.9.4
CAM Failure	4.9.5
CAM Alarm	4.9.6
Loss of Stack Exhaust Fan	4.9.7
Improper Alignment of Filter Feed Table	4.9.8
Contaminated Drum	4.9.9
Dropped Drum	4.9.10
Breached Drum	4.9.11
Recovery from an E-Stop Condition	4.9.12
Entering and Exiting the Containment Silo	4.9.13
Restraining Strap Removal for Venting Bulged Containers	4.9.14
Breached DVF Survey Station Glove	4.9.15
Damaged DVF Survey Station Glove Change-Out	4.9.16

4.9.2 Manual Operation of DVF Equipment

4.9.2.1 Ensure that the silo inlet and outlet doors are closed**.**

(RPT-TSR-03, SAC 5.2.7)

4.9.2.2 Select the appropriate screen from the following list:

- 225/M/3/001: Drum Loading and Drum
- 225/M/3/002: Filter Insertion Machine and Survey Station
- 225/M/4/001: Filter Insertion Machine
- 225/M/3/003: Drum Export and Unloading.

4.9.2.3 Ensure any devices or sequences that will be affected by the manual operation are stopped.

4.9.2.4 Place the desired device(s) or system(s) into manual.

4.9.2.5 Perform the necessary manual operations.

4.9.2.6 **IF** it is necessary to make changes to the waste tracking map,
THEN perform a tracking map update per Section 4.9.3.

4.9.2.7 Ensure the applicable device(s) or system(s) are returned to auto.

4.9.2.8 Reset any faulted sequences in the Master Scheduler(s) using the STOP or ABORT buttons, as applicable.

4.9.2.9 Ensure the Master Scheduler is RUNNING.

4.9.2.10 Re-initiate any sequences that were interrupted prior to or during manual operations, as applicable.

4.9.3 Tracking Map Update

NOTE: *This section updates drum position and status within the programmable logic controller only and is not used for WTS waste tracking*.

4.9.3.1 Ensure system is in update.

4.9.3.2 Open the tracking map.

4.9.3.3 Double-click on the desired tracking location.

4.9.3.4 Select the status for the selected location.

4.9.3.5 **REPEAT** Steps 4.9.3.3 and 4.9.3.4 as necessary.

4.9.3.6 Save updates.

4.9.3.7 Return system to auto.

4.9.4 Loss of Power to DVF

4.9.4.1 Suspend operations.

4.9.4.2 Evacuate WMF-615.

4.9.4.3 Notify the SS.

4.9.5 CAM Failure

4.9.5.1 Suspend operations.

4.9.5.2 Notify the SS, RCT, and RCSS.

4.9.6 CAM Alarm

4.9.6.1 Suspend operations
AND leave the affected area.

4.9.6.2 Warn others of the alarm condition.

4.9.6.3 Notify the SS, RCT, and RCSS.

4.9.6.4 Control access to the affected area as directed by the RCT.

4.9.7 Loss of WMF-615 Stack Exhaust Fan

4.9.7.1 **IF** the alarm is due to low flow
AND the drum has been punched,
THEN complete the cycle, as applicable.

4.9.7.2 **IF** a drum has **NOT** yet been punched,
THEN STOP FIM operation by depressing the EMEGENCY STOP button.

4.9.7.3 Attempt restart of stack fan DVE-EF-1501 and Sweep Fan DVE-EF-1502.

4.9.7.4 **IF** the fan(s) does **NOT** restart,
THEN contact the SS.

4.9.7.5 **IF** the fan(s) does restart,
THEN recover from the E-Stop in accordance with Section 4.9.12, if necessary.

4.9.8 Improper Alignment of Filter Feed Table

NOTE: *Filter feed table alignment does not require operation of the FIM during the alignment process*.

4.9.8.1 **IF** the filter feed table requires alignment,
THEN notify the SS.

4.9.8.2 Ensure the Z-Axis is positioned high enough that the filter tap is above the filter cross-feed arm.

4.9.8.3 Ensure the X-Axis is positioned all the way to the right.

4.9.8.4 Ensure the filter cross-feed arm is extended.

4.9.8.5 **GO TO** Section 4.9.13 to enter the silo
AND perform Steps 4.9.13.1 through 4.9.13.18,
THEN RETURN TO Step 4.9.8.6.

4.9.8.6 Manually position FIM table using mechanical aids.

4.9.8.7 **GO TO** Section 4.9.13
AND perform Steps 4.9.13.20 through 4.9.13.26
WITHOUT RETURNING TO this step.

4.9.9 Contaminated Drum

4.9.9.1 Notify RCT, SS, RCSS, and IS/IH.

4.9.9.2 RCT: Perform characterization and decontamination per AMWTP work control process and procedures.

4.9.9.2.1 **IF** contamination survey results are in excess of acceptable limits,
GO TO INST-RS&C-6.22.2, Decontamination, Containing or Affixing of Contamination, to decontaminate, contain, or affix contamination;
THEN RETURN TO Step 4.9.9.3.

4.9.9.3 IS/IH: Characterize for hazards other than radiological.

4.9.10 Dropped Drum

4.9.10.1 Notify SS.

4.9.10.2 Suspend operations.

4.9.10.3 **IF** drum venting is in progress,
THEN depress the E-Stop at the FIM control station.

4.9.10.4 Shut down transport equipment, if applicable.

4.9.10.5 Respond per INST-OI-11, Waste Container Handling.

4.9.11 Breached Drum

4.9.11.1 Notify SS, RCT, RCSS, and IS/IH.

4.9.11.2 Suspend operations.

4.9.11.3 **IF** drum venting is in progress,
THEN depress the E-Stop at the FIM control station.

4.9.11.4 Respond per INST-OI-11.

4.9.12 Recovery from an E-Stop Condition

4.9.12.1 Reset the E-Stop.

4.9.12.2 Push Reset FIM-CK-1501.

4.9.12.3 Push Reset DVC-CK-1501.

4.9.12.4 Ensure all device faults are cleared.

4.9.12.5 Ensure all devices are placed in the correct position and/or status for resuming automatic operations.

4.9.12.5.1 **IF** it becomes necessary to perform manual moves,
GO TO Section 4.9.2 for manual operations;
THEN RETURN TO Step 4.9.12.7.

4.9.12.6 **IF** it is necessary to correct the waste tracking map,
GO TO Section 4.9.3;
THEN RETURN TO Step 4.9.12.7.

4.9.12.7 Ensure the system is in auto and the Master Scheduler is RUNNING.

4.9.13 Entering and Exiting the Containment Silo

4.9.13.1 Ensure no drums are in the DVF silo.

4.9.13.2 **WHEN** required by the AE,
THEN perform manual moves in accordance with Section 4.9.2, as required, to verify system operability.

4.9.13.3 Ensure that the containment silo sweep and stack exhaust fan have been operating for at least 10 minutes since the last filter installation.

4.9.13.4 Ensure the FIM equipment is placed in a safe configuration.

4.9.13.5 Ensure the hydraulic pump is OFF.

4.9.13.6 Ensure the sweep fan is OFF.

4.9.13.7 Ensure the stack exhaust fan is OFF.

4.9.13.8 Turn off disconnect N-DSWM-1504.

4.9.13.9 AE: Perform an LO/TO.

4.9.13.10 **WHEN** required by the AE,
THEN attempt to perform manual moves in accordance with Section 4.9.2, as required, to verify system non-operability.

4.9.13.11 Log out of the ICS workstation.

4.9.13.12 Open the containment silo door.

NOTE: *Personnel entering the Silo must be qualified as a LAE or AE.*

4.9.13.13 RCT: Perform radiological surveys of the silo prior to personnel entry.

4.9.13.14 IS/IH: Perform beryllium survey of the silo prior to silo entry, per MP-ISIH-2.7, Chronic Beryllium Disease Prevention Program.

4.9.13.15 **IF** the FIM filter table is to be adjusted,
THEN ensure mechanical aids for manually positioning the FIM table are available.

WARNING

Failure to wear proper personnel protective equipment (PPE) in the containment silo may result in injury due to tripping, pinch points, and head bump hazards.

4.9.13.16 Ensure personnel are wearing hard hats and appropriate gloves.

4.9.13.17 **IF** required to stand on the conveyor,
THEN install the conveyor platform and steps.

4.9.13.18 Ensure filters have been through the go/no-go gauges prior to loading in the hopper.

4.9.13.19 Perform activities to maintain filter feed system, as needed.

4.9.13.20 **IF** the conveyor platform and steps are installed,
THEN remove the conveyor platform and steps.

4.9.13.21 **WHEN** exiting the silo,
THEN perform personal survey per RCT direction.

4.9.13.22 Ensure all personnel have exited the containment silo.

(RPT-TSR-03, SAC 5.2.7)

4.9.13.23 Close the containment silo.

4.9.13.24 Ensure appropriate gloves are worn;
THEN install and tighten all door retaining bolts.

(RPT-TSR-03, SAC 5.2.7)

4.9.13.25 Re-hang chain and warning posting on silo entry door.

4.9.13.26 Remove the LO/TO.

4.9.14 Restraining Strap Removal for Venting Bulged Containers

NOTE: *Removing lid-restraining straps from the drum(s) is allowed to be performed using the WMF-615 safety mats as an alternative energy control per Risk Assessment N-615-Conveyor, WMF-615 Conveyor.*

4.9.14.1 **WHEN** the bulged drums reach the ZONE CONVEYOR
THEN stand on conveyer safety mats
AND ensure the safety mats indicate tripped.

4.9.14.2 Verify ZONE CONVEYOR cannot be operated from the ICS controls station.

4.9.14.3 While standing on the safety mats, remove lid restraining straps from the drum(s).

4.9.14.4 Reset safety mats.

4.9.14.4.1 **WHEN** safety mats are reset,
THEN RETURN TO Step 4.3.14.

4.9.15 Breached DVF Survey Station Glove

4.9.15.1 **IF** performing work in the survey station gloves at the time of discovery of the breached glove,
THEN limit movement.

4.9.15.1.1 Ensure an RCT is present.

4.9.15.1.2 Exit the survey station gloves.

4.9.15.1.3 Tape over the glove port.

4.9.15.1.4 Contact the SS.

4.9.15.1.5 SS: Evaluate further actions in accordance with MP-COPS-9.7, Control of Equipment and Systems Status.

4.9.15.1.6 Change gloves per Section 4.9.16.

4.9.15.2 **IF NOT** performing work in the survey station gloves at the time of discovery of the breached glove,
THEN perform the following:

4.9.15.2.1 Tape over the glove port.

4.9.15.2.2 Contact the SS and RCT.

4.9.15.2.3 SS: Evaluate further actions in accordance with MP-COPS-9.7.

4.9.15.2.4 Change gloves per Section 4.9.16.

4.9.16 Damaged DVF Survey Station Glove Change-Out

4.9.16.1 Obtain new gloves, preferably 15-mil ambidextrous.

4.9.16.2 Ensure no drum is present in survey station enclosure during glove change-out evolution.

4.9.16.3 Perform an LO/TO per INST-COPS-9.20.1.

4.9.16.4 Contact Radiological Controls for coverage.

4.9.16.5 Use a single set of PPE (e.g., single glove/single sleevettes).

4.9.16.6 **IF** required to stand on the conveyor,
THEN install the conveyor platform and steps.

4.9.16.7 Perform survey on exposed glove surface, glove ring, and adjacent survey station surfaces.

4.9.16.8 **IF** contamination is **NOT** found,
THEN continue with glove removal.

4.9.16.9 **IF** contamination is found,
THEN consult with Radiological Controls before continuing.

4.9.16.10 Squeeze air out of glove.

4.9.16.11 Tape glove as close to port ring as possible.

4.9.16.12 Loosen port ring/metal clamp and remove.

4.9.16.13 Remove rubber band from port ring.

4.9.16.14 Remove glove and place in radiological disposal bag.

4.9.16.15 Perform contamination survey of the survey station glove port area.

4.9.16.16 **IF** contamination is found,
THEN consult Radiological Controls before continuing.

4.9.16.17 Place open end of the new glove over the port with the thumb pointed upward.

4.9.16.18 Place rubber band on the outside of the glove over the port ring.

4.9.16.19 Place port ring/metal clamp over the rubber band and tighten.

4.9.16.20 Initial and date glove with a permanent marker next to the port ring/metal clamp.

4.9.16.21 **IF** the conveyor platform and steps are installed,
THEN remove the conveyor platform and steps.

4.9.16.22 Ensure all personnel have exited the survey station enclosure.

4.9.16.23 Remove LO/TO in accordance with INST-COPS-9.20.1.

4.9.16.24 Dispose of waste as secondary waste per INST-OI-24 and the applicable HWD.

5.0 DEFINITIONS

Filter insertion machine. All components necessary to punch and insert filters in waste drums. Includes the hydraulic system, drum filter bin, and control systems.

6.0 REFERENCES

(1) INST-COPS-9.20.1, Lockout/Tagout

(2) INST-OI-11, Waste Container Handling

(3) INST-OI-24, Packaging Radioactive Waste

(4) INST-RS&C-6.22.2, Decontamination, Containing or Affixing of Contamination

(5) MP-COPS-9.7, Control of Equipment and Systems Status

(6) MP-COPS-9.17, Performing Pre-Job Briefings and Post-Job Reviews

(7) MP-COPS-9.20, Hazardous Energy Control Processes

(8) MP-DOCS-18.2, Records Management

(9) MP-ISIH-2.7, Chronic Beryllium Disease Prevention Program

(10) MP-ISIH-2.30, Hand and Power Tools

(11) MP-Q&SI-5.4, Identification of Nonconforming Conditions

(12) RPT-TSR-03, Technical Safety Requirements

7.0 RECORDS

Records generated by this procedure are classified in accordance with the table below and dispositioned in accordance with MP-DOCS-18.2, Records Management.

Record Description	Classification
INST-OI-50, Case File	Both FOR/NP WIPP/ENV2-a-1-a/Destroy 5 years after Life of Facility
Form-1129, Radiological Survey Report and Map	Facility Operating Record/ENV2-a-1a/ Destroy 5 years after Life of Facility
Form-1600, WMF-615 Filter Insertion Operations Checklist	Facility Operating Record/ENV2-a-1a/ Destroy 5 years after Life of Facility
Form-1603, Filter Insertion Record	Both FOR/NP WIPP/ENV2-a-1-a/Destroy 5 years after Life of Facility

8.0 EXHIBITS

None

9.0 APPENDICES

Appendix A – Revision Log

Appendix A – Revision Log

Revision Number	Date Approved	Pages Affected	Description of Revision
0	10/20/04	All	Initial issue. DCR-3326.
1	10/27/04	Various	DCR-3387. Incorporate training and additional validation comments.
2	11/04/04	Various	DCR-3407. Add and revise steps throughout to clarify procedure to facilitate System Operations. Minor editorial changes to update to formatting standard.
3	12/01/04	Various	DCR-4029. Add and revise steps to clarify handling of stripped filters.
4	09/12/06	Various	DCR-4677. Format to new template per MP-DOCS-18.1, minor editing, modify procedure to include venting and simplification of steps. .
4 FC-1	12/07/06	Pg 2	DCR-5634. Add verbiage to Step 3.1.10 to clarify “area” see CAR-24574.
4 FC-2	02/16/06	Pgs 9 and 20	DCR-5777. Add Step 4.18.4 to allow manually punching a drum and 4.4.6 add “or 4.8.14 as needed”
4-FC-3	03/25/07	Pgs 9, 14, 15, 20	DCR-5839. Delete FC-2 and give direction on what to do if the FIM stops while punching.
4-FC-4	06/29/07	6	DCR-6193. Delete Step 4.2.11.2.1 and renumber steps.
5	09/10/07	Various	DCR-5717. Incorporate FC-1, FC-2, FC-3, and FC-4. Add pre-job brief step and job-debriefing section. Update Roles and Responsibilities, Definitions, and References. Edit Caution per MP-DOCS-18.1.

Revision Number	Date Approved	Pages Affected	Description of Revision
6	10/11/07	New Step 4.3	DCR-6443. Add new step to incorporate TID QC check into drum venting activities.
7	05/15/08	3.1.4 & 4.9.13.2	DCR-7162. Minor change to correct Document ID of MP-COPS-9.18.3 to INST-COPS-9.18.3 throughout.
7 FC-1	08/27/08	Pgs 21, 22 and 23	DCR-7494. To allow manual insertion of NucFil 036 filters in all 55/85 gal. Drums.
7 FC-2	10/23/08	Pgs 22, 21	DCR-7639. To modify procedure to allow discharge of the drum from the silo in manual mode of FIM.
8	01/27/09	Various	DCR-7854. DSA Implementation. Made minor editorial changes per MP-DOCS-18.1. Incorporated DOCS-BLUESHEET-01 changes.
9	10/06/09	Various	DCR-8515. Changes for new software ICS SCR# 547 FMP #0898, edited per MP-DOCS-18.1, incorporated DOCS-BLUESHEET-02.
10	11/18/09	Page 2	DCR-8765. Added Step 3.1.7 to implement 2009 DSA/TSR update.
11	07/28/10	Pgs 2, 4, and 5	DCR-9319. To change the order of steps for proper sequencing which requires that the computer be online.
11 FC-1	01/19/11	Page 6	DCR-9825. Changed the minimum and maximum stack flow rates.
12	3/4/11	Pg 3 and 6	DCR-9745. Added new Step 3.2.10.1 and changed “HOMED” to “AT FULLY RAISED” in Step 4.2.15.2.
12 FC-1	04/13/11	Pg 3	DCR-10062. Changed glove inspection and frequencies in Step 3.2.10.1 from 12 to 18 months.
13	09/14/11	Various	DCR-10170. CAR 63176, AI 54815. This DCR supersedes the changes made by FC-1, DCR-10062. Added steps to prevent venting roaster oxide containers. Added section for responding to a breached DVF survey station glove and for damaged or expired DVF survey station glove

Revision Number	Date Approved	Pages Affected	Description of Revision
			change-out.
14	08/11/12	Various	DCR-11434. Revised for DSA/TSR updates.
15	05/02/13	Various	DCR-11941. Changes made to incorporate NSTB-74037, LCO 1.2 implementation and ITG-BLUESHEET-020.
16	08/05/13	Steps 4.2.3, 4.3.9, 4.3.8, 4.3.12	DCR-12588. Revise steps regarding input conveyor being left loaded to facilitate startup with minimum delays; to clarify when checks are done; and to clarify loading sequence and positioning of drums.
16 FC-1	11/21/13	Pg 12, 13, & 14	DCR-12973. Revise step sequence of survey station activities to install filter prior to performing contamination surveys on top of the drum.
17	12/17/13	Various	DCR-12803. Incorporated FC-1 (DCR-12973). Incorporated DSA/TSR changes. Made changes to streamline operations and improve wording. Also added requirement to CAM operation during venting. Entire document revised.
18	08/25/14	Step 4.2.16.1	DCR-13443. Deleted Step 4.2.16.1; changes made at steps 4.5.4.1 and 4.9.8.7. Editorial changes made in step formatting per MP-DOCS-18.1 requirements.

WIPP Training Requirements Implementation Matrix

Advanced Mixed Waste Treatment Project

Approval:

(*Signature on file. See DCR-11743.*) 04/02/13

Date

REVISION LOG

Revision Number	Date Approved	Pages Affected	Description of Revision
0	12/17/10	All	DCR-9632. Initial issue.
1	04/02/13	Various	DCR-11743. Update of document to current training requirements. Incorporate ITG-BLUESHEET-148, where applicable. Document considered a rewrite and periodic review due to number of changes.

1.0 PURPOSE/SCOPE

The purpose of this matrix is to identify how all the training requirements for the Waste Isolation Pilot Plant (WIPP) permit listed in either MP-TRUW-8.1, Certification Plan for INL Transuranic Waste, or MP-TRUW-8.2, Quality Assurance Project Plan, are implemented at the Advanced Mixed Waste Treatment Project (AMWTP). This matrix will be reviewed and updated, as necessary, any time either source document is revised.

2.0 IMPLEMENTATION MATRIX

Procedure Section	Extract of Requirement	AMWTP Implementation
MP-TRUW-8.1, Certification Plan for INL Transuranic Waste		
5.5	Personnel performing waste characterization and certification activities affecting quality are qualified and trained to ensure that suitable proficiency is achieved and maintained in the performance of their assigned tasks.	MP-RTQP-14.1, Preparation and Administration of Training Plans MP-RTQP-14.4, Personnel Qualification and Certification Training requirements specified for waste characterization can be found throughout this document. Training requirements for waste certification personnel are specified in qualification checklist QCWCO1A.
5.5.1	The appropriate managers, with support of the training organization, determine job positions and qualification standards for each job category relevant to the AMWTP. Task responsibilities for personnel are analyzed in accordance with MP-RTQP-14.6, Job Analysis. Education, experience, and training prerequisites commensurate with minimum requirements are included in the qualification packages in accordance with MP-RTQP-14.4.	MP-RTQP-14.1 MP-RTQP-14.4 MP-RTQP-14.6, Job Analysis
5.5.2	Managers ensure that AMWTP personnel receive indoctrination and training on the scope, purpose, and objectives of the WIPP Program and the specific Quality Assurance Objectives (QAOs) of the tasks being performed.	0AWT3105, TRU Programs and WIPP Waste Analysis Plan (WAP) Overview
5.5.2	Personnel performing activities affecting quality are trained according to their respective training plans to ensure they achieve and maintain proficiency prior to performing any tasks subject to these Quality Assurance Plan (QAP) requirements.	MP-RTQP-14.1 MP-RTQP-14.4

Procedure Section	Extract of Requirement	AMWTP Implementation
5.5.2	Personnel receive training, including on-the job training and hands-on training, as needed, to achieve initial proficiency and continuing training requisite with their activities and level of responsibility to maintain proficiency; and adapt to changes in technology, methods, job responsibilities and authority, and Quality Assurance (QA) implementing procedures in accordance with MP-RTQP-14.1, and MP-RTQP-14.4.	MP-RTQP-14.1 MP-RTQP-14.4 Course 0AWT2201, Quality Assurance
5.5.2	Training is designed, developed, conducted, and evaluated in accordance with approved AMWTP training procedures. Training programs may include classroom instruction, practical hands-on experience, supervised on-the-job training, self-paced individual study, and written, oral, or practical demonstration of worker competence.	MP-RTQP-14.4 MP-14.16, Evaluation of Training
5.5.2	The period of effectiveness for qualification associated with special processes, operations that require special skills, and the requalification criteria are specified or referenced in MP-RTQP-14.4 or supporting training program plans.	MP-RTQP-14.4
5.5.2	Nondestructive examination (NDE) and nondestructive assay (NDA) are considered to be characterization processes; therefore, personnel performing NDE are qualified to a program based on the American Society of Nondestructive Testing (ASNT) Recommended Practice No. SNT-TC-1A, June 1980 Edition. Later editions of SNT-TC-1A may be used as long as the minimum requirements of the June 1980 edition are met. Personnel performing NDA are qualified to the American Society for Testing and Materials (ASTM) C1490, Standard Guide for Selection, Training, and Qualification of Nondestructive Assay Personnel. Training is subject to ongoing review to determine instruction and training program effectiveness and shall be upgraded whenever improvements or enhancements are identified.	ASTM C1490 is implemented in the following NDA qualification packages: • QPOT3B, Drum Assay • FQPOT9B, Facility Drum Assay. SNT-TC-1A is implemented through the following NDE qualification package(s): • QPOT3A, Real-Time Radiography

Procedure Section	Extract of Requirement	AMWTP Implementation
5.5.2	Personnel performing TRU Program activities affecting quality receive indoctrination in the following: • General criteria, the QAP, and applicable codes, regulations, and standards • Specific criteria, including the Quality Assurance Project Plan (QAPjP), Certification Plan for INL Transuranic Waste, Contact-Handled Transuranic Waste Authorized Methods for Payload Control (CH-TRAMPAC), and any implementing procedures, as applicable.	0AWT3105
5.5.2	Auditable records documenting the required training and qualifications are maintained as QA records and controlled in accordance with MP-RTQP-14.19, Training Records Administration.	MP-RTQP-14.19, Training Records Administration
5.14	Personnel performing validation at the AMWTP are trained to the existing industry standardized training requirements (e.g., ASTM C1490).	QCITRRTR, Level 1 Validation Reviewer for RTR QCHGCITR, HGAS ITR QCITR0VE, Level I Validation ITR VE QCITR0SS, Level 1 Validation ITR SS/Coring QCNDAETR, Nondestructive Assay Expert Technical Reviewer/Independent Technical Reviewer QCSPM01A, Site Project Manager Designee QCASYITR, Non-destructive Assay Independent Technical Reviewer

Procedure Section	Extract of Requirement	AMWTP Implementation
Nondestructive Assay		
A.4.1	Only appropriately trained and qualified personnel are allowed to perform radioassay and data validation/review. Standardized Training requirements for radioassay personnel are based upon existing industry standardized training requirements (e.g., ASTM C1490, Reference A8) and meet the specifications in the Quality Assurance Program Document (QAPD). Requalification of radioassay personnel shall be based upon evidence of continued satisfactory performance and must be performed at least every 2 years.	MP-RTQP-14.4 QPOT3B, Drum Assay FQPOT9B, Facility Drum Assay QCASYITR QCNDAETR, Nondestructive Assay Expert Technical Reviewer/Independent Technical Reviewer QCSPM01A
A.6.5	*Data Comparability* is defined as "a measure of confidence with which one data set can be compared to another." For NDA, this is addressed by ensuring that all data are produced under the same system of controls. These controls apply to all aspects of the data generation process, including: • Procurement of analytical instruments • Calibration and operation of assay equipment according to industry standards • Preparation and use of standardized instrument and data review procedures • Training of equipment operators and technical/data review personnel to the QAPD, as specified in Section A.4.1.	See previous entry for Section A.4.1.
Real-Time Radiography Operations		
F.2	Only trained and qualified radiography operators shall be allowed to operate radiography equipment.	QPOT3A
F2	Standardized training and qualification requirements for radiography operators are based upon existing industry standard training requirements as detailed in the radiography qualification package and comply with the training and qualification requirements in MP-RTQP-14.4.	QPOT3A
F.2	The AMWTP has developed a training program that provides radiography operators with both formal and on-the-job training (OJT).	QPOT3A

Procedure Section	Extract of Requirement	AMWTP Implementation
F.2	Radiography operators are instructed in: • Specific waste generating practices • Typical packaging configurations • Associated waste material parameters expected to be found in each waste matrix code at the site.	QPOT3A
F.2	The Real-Time Radiography (RTR) OJT and apprenticeship is conducted by an experienced, qualified radiography operator prior to qualification of the training candidate.	AMWTP does not have an apprenticeship program; instead, minimum time performing duties under an OJT instructor are included in QPOT3A
F.2	Radiography operators are trained on the types of waste that are generated, stored, or characterized at the AMWTP. The RTR training program contains: • Project requirements • State and Federal regulations • Basic principles of radiography • Radiographic image quality • Radiographic scanning techniques • Application techniques • Radiography of waste forms • Standards, codes, and procedures for radiography • Site-specific instruction.	QPOT3A 0AWT4302, RTR Theory and Equipment

Procedure Section	Extract of Requirement	AMWTP Implementation
F.2	The RTR training program also contains OJT which addresses: • • System operation • Identification of packaging configurations • Identification of waste material parameters • Weight and volume estimation • Identification of prohibited items.	QPOT3A 0AWT4302
F.2	Requalification of operators are based on evidence of continued satisfactory performance (primarily audio/video recording reviews), and shall be done at least every 2 years. Unsatisfactory performance will result in disqualification. Unsatisfactory performance is defined as the misidentification of a prohibited item in a training drum or a score of less than 80% on the comprehensive exam.	MP-RTQP-14.4 QPOT3A
F.2	Qualifications of radiography operators meet the following requirements: Successfully pass a comprehensive exam based upon training enabling objectives. The comprehensive exam will address all of the radiography operations, documentation, characterization, and procedural elements stipulated in the WIPP Waste Acceptance Criteria (WAC).	QPOT3A
F.2	A practical capability demonstration shall be performed in the presence of an appointed site radiography subject matter expert. The person will be an experienced radiography operator who is also qualified as an OJT trainer.	QPOT3A
F.2	A training drum with internal containers of various sizes is scanned semiannually by each operator.	Admin Form AFRTRDRU, RTR Biannual Container

Procedure Section	Extract of Requirement	AMWTP Implementation
F.2	Radiography test drums contain items common to the waste streams to be generated and stored at the AMWTP. The test drums are divided into layers with varying packing densities or different drums may be used to represent different situations that may occur during radiography examination at the site. Test drums shall be representative of the waste matrix codes for which waste stream profile form (WSPF) approval is sought. Test drums shall be examined and successfully identified prior to waste stream shipment. The following is a list of required elements of a radiography test drum: • A punctured aerosol can • Pigtails on poly liners (horsetail bag) • Pair of coveralls • Empty bottle • Irregular shaped pieces of wood • Empty one-gallon paint can • Full container • Aerosol can with fluid • One-gallon bottle with three tablespoons of fluid • One-gallon bottle with one cup of fluid (upside down) • Leaded glove or leaded apron • Wrench. These items shall be successfully identified by the operator as part of the qualification process.	QPOT3A Admin Form AFRTRDRU
F.4	Only appropriately trained and qualified personnel shall be allowed to perform data validation/review.	QCITRRTR QCSPM01A
Visual Examination		
G.2	Standardized training for visual examination (VE) has been developed to include both formal classroom training and OJT.	QPVE0001, Visual Examiner 0AWT3141, VE Indoctrination 0AWT3142, Visual Examination 0AWT3143, Waste Tracking System and Data Quality Objectives
G.2	Personnel performing VE are instructed in the specific waste generating processes.	QPVE0001

Procedure Section	Extract of Requirement	AMWTP Implementation
G.2	Personnel performing VE are instructed in typical packaging configurations.	QPVE0001
G.2	Personnel performing VE are instructed in and the waste material parameters expected to be found in each waste matrix code at the site.	QPVE0001
G.2	The OJT and apprenticeship is conducted by an operator experienced and qualified in VE prior to qualification of the candidate.	AMWTP does not have a formal apprenticeship program; instead, requirements to perform VE on different waste streams at AMWTP under an OJT instructor are included in QPVE0001.
G.2	The training shall be site-specific to include the various waste configurations at the site.	QPVE0001
G.2	Training and qualification requirements for VE are detailed in the VE qualification package in accordance with MP-RTQP-14.4.	QPVE0001
G.2	Visual examination operators need only be trained to the physical forms and packaging configurations used on the waste stream that they are examining and packaging.	QPVE0001
G.2	Visual examination personnel are requalified once every 2 years.	QPVE0001
G.2	Training shall address the following requirements: • Project requirements • State and Federal regulations • Application techniques • Site-specific instruction.	QPVE0001
G.2	Training shall also include OJT that addresses: • Identification of packaging configurations • Identification of waste material parameters • Weight and volume estimation • Identification of prohibited items.	QPVE0001

Procedure Section	Extract of Requirement	AMWTP Implementation
Visual Examination Expert		
G.2	The Visual Examination Expert (VEE) receives training in the same elements as the visual examination personnel with both formal training and on-the-job training.	QCVEE001, Visual Examination Expert Qualification
G.2	Qualification of a VEE is based on familiarity with waste generating processes, familiarity with the types of waste being characterized, and meeting the training requirements discussed above.	QCVEE001
G.2	Consistent with other VE personnel, the VEE is requalified once every 2 years. Specific qualification and training requirements for the VEE are listed in the qualification checklist in accordance with MP-RTQP-14.4.	QCVEE001
G.4	Only appropriately trained and qualified personnel are allowed to perform data validation/review.	QCITR0VE QCSPM01A
MP-TRUW-8.2, Quality Assurance Project Plan		
B-0	The TRU Programs Manager's responsibilities include ensuring that adequate technical and QA training are provided for personnel performing WIPP activities.	MP-RTQP-14.4
Real-Time Radiography Operations		
C.1.3	Operator training and experience are the most important considerations for ensuring implementation of quality controls (QCs) in regard to the operation of the RTR system and for interpretation and disposition of radiography results. Only trained personnel are allowed to operate RTR equipment.	QPOT3A
C1-3	Standardized training requirements for RTR operators are based upon existing industry standard training requirements as detailed in the RTR qualification package in accordance with MP-RTQP-14.4.	QPOT3A

Procedure Section	Extract of Requirement	AMWTP Implementation
C1-3	The AMWTP has developed a training program that provides RTR operators with both formal and OJT.	QPOT3A
C1-3	Radiography operators are instructed in: • Specific waste generating practices • Typical packaging configurations • Associated waste material parameters expected to be found in each waste matrix code at the site.	QPOT3A
C1-3	The OJT and apprenticeship is conducted by an experienced, qualified RTR operator prior to qualification of the training candidate.	AMWTP does not have an apprenticeship program; instead, minimum time performing duties under an OJT instructor are included in QPOT3A.
C1-3	Radiography operators are trained on the types of waste that are generated, stored, and characterized at the AMWTP.	QPOT3A
C1-3	All of the radiography QC requirements specified in the WIPP-WAP are incorporated into the AMWTP training program and RTR operations to ensure data quality and comparability.	MP-RTQP-14.4 QPOT3A
C1-3	One or more training containers with items (including prohibited items) common to the waste streams to be characterized and internal containers of various sizes are scanned semiannually by each operator.	QPOT3A Admin Forms AFRTRDRU and AFRTR SWB
Visual Examination		
C1-4	Standardized training for VE has been developed.	QPVE0001
C1-4	Personnel performing VE are instructed in: • Specific waste generating processes • Typical packaging configurations • Waste material parameters expected to be found in each waste matrix code at the AMWTP. The training is site specific to include the various waste configurations at the AMWTP.	QPVE0001 0AWT3141

Procedure Section	Extract of Requirement	AMWTP Implementation
C1-4	Training will include the following regardless of Summary Category Group: • Identifying and describing the contents of a waste container by examining all items in waste containers of previously packaged waste • Identifying when VE cannot be used to meet the Data Quality Objectives (DQOs).	QPVE0001
C1-4	VE personnel are requalified once every 2 years in accordance with MP-RTQP-14.4.	QPVE0001
Visual Examination Expert		
C1-4	The VEE will be familiar with: • Waste generating processes that have taken place at the AMWTP • All types of waste being characterized at the AMWTP.	0AWT3141 0AWT3142
C1-4	VEEs selected will meet the qualification and training requirements specified in MP-RTQP-14.4.	QPVE0001
Other Requirements		
C-2	Program procedures shall address the following minimum elements: • Develop training specific to waste characterization and certification procedures.	MP-RTQP-14.4, Personnel Qualification and Certification
C3-4a	Accuracy is obtained by using a target to tune the image for maximum sharpness and by requiring operators to successfully identify 100% of the items required to meet the DQOs for radiography specified in Section C-4a(1) in a training container during their initial qualifications and subsequent requalification.	QPOT3A
C3-4a	The comparability of RTR data from different operators is enhanced by using standardized RTR procedures and operator qualification. Operator training requirements are detailed in the RTR qualification package in accordance with outlined in Section B1-3b , MP-RTQP-14.4, and this implementation matrix.	QPOT3A

Procedure Section	Extract of Requirement	AMWTP Implementation
C3-4b	Accuracy is maintained by requiring operators to pass a comprehensive examination and demonstrate satisfactory performance in the presence of the VEE during their initial qualification and subsequent requalification. VE operators shall be requalified every 2 years.	QPVE0001
C3-4b	The comparability of VE data from different operators is enhanced by using standardized VE procedures and operator qualification. Operator training requirements are detailed in the VE qualification package in accordance with MP-RTQP-14.4.	QPVE0001
C3-9	Comparability is ensured through sites meeting the training requirements and complying with the minimum standards outlined for procedures that are used to implement the acceptable knowledge (AK) process.	QCAKE01A, Acceptable Knowledge Expert
C3-10a(1)	One hundred percent of the Batch Data Reports receive an Independent Technical Review (ITR). This review is performed by a trained and qualified individual who was not involved in the generation or recording of the data under review.	QCITRRTR QCHGCITR, HGAS ITR QCITR0VE QCITR0SS
C3-14	Before performing activities that affect QAPjP quality, all personnel receive indoctrination into the applicable scope, purpose, and objectives of the QAPjP and the specific QAOs of the assigned task. Personnel assigned to perform activities for the QAPjP have the education, experience, and training applicable to the functions associated with the work. Evidence of personnel proficiency and demonstration of competence in the task(s) assigned is demonstrated and documented. All personnel designated to work on specific aspects of the QAPjP maintain qualification (that is, training and certification) throughout the duration of the work. Qualification requirements for personnel are documented in Individual Training Plans or qualification packages. Job performance is evaluated and documented at periodic intervals to ensure personnel maintain proficiency and record additions to training, as necessary per MP-RTQP-14.4.	0AWT3105 MP-RTQP-14.4 MP-RTQP-14.1 QCASYITR

Procedure Section	Extract of Requirement	AMWTP Implementation
C3-14a	Personnel involved in QAPjP activities receive continuing training to ensure job proficiency is maintained. Training includes both education in principles and enhancement of skills. Training records that specify the scope of the training, the date of completion, and documentation of job proficiency are maintained as QA Records. Maintenance of training records is addressed in MP-RTQP-14.19, Training Records Administration.	MP-RTQP-14.4 MP-RTQP-14.19.
C3-14	Analytical laboratory line management ensures analytical personnel are qualified to perform the analytical method(s) for which they are responsible. The minimum qualifications for certain specified positions for the WIPP-WAP are summarized in Table C3-10. CCP personnel are trained and qualified in accordance with CCP-QP-002, CCP Training and Qualification Plan	MP-ACLP-24.6, Analytical Training and Qualification Analytical Chemical laboratory personnel are trained and qualified in accordance with CCP-QP-002, CCP Training and Qualification Plan.
C3-14	An evaluation of personnel qualifications includes comparing and evaluating the requirements specified in the job/position description and the skills, training, and experience included in the person's current resume. This evaluation, done in accordance with MP-RTQP-14.1 and MP-RTQP-14.4, is also performed for personnel who change positions because of a transfer or promotion as well as personnel assigned to short-term or temporary work assignments that may affect the quality of the WIPP WAP.	MP-RTQP-14.1 MP-RTQP-14.4
Table C3-10	Minimum Training and Qualification	The requirements listed in this table are included in the applicable Employee Position Descriptions (Form-1018), Individual Training Plans (Form-1020), or qualification packages or checklists.

Procedure Section	Extract of Requirement	AMWTP Implementation
C4-3a	To ensure compliance with the requirements for compiling assembling, evaluating, assessing, and resolving discrepancies associated with AK, AMWTP AK personnel shall be trained in accordance with MP-RTQP-14.4. The training requirements shall include the following subjects: • WIPP-WAP in Permit Attachment C and the WIPP Hazardous Waste Permit TSDF-WAC specified in the QAPjP • State and Federal Resource Conservation and Recovery Act (RCRA) regulations associated with solid and hazardous waste characterization • Discrepancy resolution and reporting processes • Site-specific procedures associated with waste characterization using AK.	QCAKE01A
C4-3g	QA AK audit checklists include the elements listed below for review during the periodic audit, and the AMWTP provides information as requested by QA to satisfy the AK audit/surveillance requirements: • Personnel training and qualifications are documented.	MP-RTQP-14.19

3.0 RECORDS

Records generated by this procedure are classified in accordance with the table below, and dispositioned in accordance with MP-DOCS-18.2, Records Management.

Record Description	Classification
LST-RTQP-03, WIPP Training Requirements	Misc. Other Records/A16-1.2/Destroy 5 years after submittal or being superseded.

Change Control

Advanced Mixed Waste Treatment Project

Approval:

(Signature on file. See DCR-13350.)	07/10/14
	Date

AMWTP MANAGEMENT PROCEDURE		
MP-CD&M-11.1, Rev. 10	Issued: 07/14/14	Effective: 07/15/14
Change Control		

REVISION LOG

Revision Number	Date Approved	Pages Affected	Description of Revision
0	8/15/02	All	DCR-2002-1316. Initial issue.
0	9/16/02	All	DCR-2002-1502. Minor change to effective date.
1	11/18/2002	6&9	DCR-2002-1476
2	7/02/03	All	DCR-2003-2107. Incorporate changes associated with Software Change Control.
3	4/8/04	All	DCR-2004-2780. Correct discrepancies between this and other related procedures.
4	7/06/04	All	Corrective action to AI-3566 and ORPS ID BNFL-AMWTP-2003-008.
5	4/11/05	All	DCR-2004-3221. Incorporate comments identified during a management assessment.
6	5/01/06	1	DCR-4897. Added additional information in Purpose/Scope.
7	05/31/06	ALL	DCR-5003. Rewrite document, including changes related to overall process re-engineering, related to various TrackWise items. Various editorial changes and formatting changes for clarification/grammatical consistency and to meet requirements of MP-DOCS-18.3.
8	07/02/09	All	DCR-7676. Updated periodic review date, incorporated BLUESHEET-03; added information related to structures acquired from other DOE contractors (step 3.1.9 and new appendix: AMWTP Structures Acquired from Other DOE Contractors), and made misc. editorial and formatting changes, as required by MP-DOCS-18.3.
9	07/12/12	Various	DCR-11357. Updated to match new USQ process. Incorporated ITG-Bluesheet-154. Periodic Review.
10	07/10/14	Various	DCR-13350. Incorporated DOCS-BLUESHEET-11.

TABLE OF CONTENTS

1.0 PURPOSE/SCOPE 1

2.0 ROLES AND RESPONSIBILITIES 1

3.0 PROCEDURE 2

3.1 General 2

3.2 Temporary Physical Changes 3

3.3 Software Change Control 3

3.4 Temporary Software Overrides 3

3.5 Tests and Investigations 3

3.6 Unreviewed Safety Question Review 4

3.7 Facility Modification Proposal Request 4

3.8 Developing Technical Specifications 5

4.0 DEFINITIONS 6

5.0 REFERENCES 7

6.0 RECORDS 8

7.0 EXHIBITS 8

8.0 APPENDICES 8

Appendix A – AMWTP Structures Acquired from other DOE Contractors A1

AMWTP MANAGEMENT PROCEDURE		
MP-CD&M-11.1, Rev. 10	Issued: 07/14/14	Effective: 07/15/14
Change Control		

1.0 PURPOSE/SCOPE

This procedure establishes methods for the control of physical modifications at the Advanced Mixed Waste Treatment Project (AMWTP). It is essential that all changes to the facility, regardless of their significance or complexity, be controlled to assure facility configuration is properly managed and regulatory authorization is maintained. Also, each intended change must be evaluated for its impact on the facility *Authorization Basis* (see def.), safety, and the environment. All changes must be reviewed and approved by the Site Project Manager or designee to ensure that Waste Isolation Pilot Plant (WIPP) *data quality objectives* (see def.) or other WIPP quality-affecting changes are properly evaluated and/or implemented.

This procedure only provides an overview of the different aspects of engineering change control that are implemented through other procedures.

Addition (new) or relocation of temporary structures, utilities, and services are within the scope of the *facility modification* (see def.) process.

The facility modification process shall only apply to those radiological instruments that are part of a permanently installed Class I, II, or III plant or facility *structure, system, or component* (SSC; see def.). The process shall not, for example, apply to portable, non-engineered equipment (e.g., "friskers," portable air monitors). The facility modification process also does not apply to adjustments to equipment or setpoints that are made in accordance with approved procedures.

Adherence to this procedure and its supporting instructions will establish consistency for physical configuration, Authorization Basis, and facility documentation; and maintain this consistency throughout the operational life of the AMWTP, particularly as changes are being made to it.

This procedure is not intended to be performed as a step-by-step document.

2.0 ROLES AND RESPONSIBILITIES

None

3.0 PROCEDURE

3.1 General

3.1.1 A change may be initiated as a result of the disposition of a non-conformance report (NCR), in accordance with MP-Q&SI-5.4, Identification of Nonconforming Conditions.

3.1.1.1 An NCR is initiated to document *non-maintenance-related failure* (see def.) of a component or equipment as a result of manufacturers' defect, premature failure, structural failure or the failure to perform as designed.

3.1.2 A change may also be initiated based on the desire and need to improve the AMWTP equipment and processes.

3.1.3 An applicability review will be performed for each change to determine whether an Unreviewed Safety Question (USQ) is required. If required, the change will be evaluated as described in MP-NSPC-3.2, Unreviewed Safety Question Process, and as directed by the various change control implementing procedures.

3.1.4 Any change that receives a positive USQ determination (i.e., a USQ exists) may not be implemented. Either a change to the documented Safety Analysis (DSA) will be required or the change will have to be revised such that a USQ does not exist.

3.1.5 No change may be started unless it has the appropriate written authorization.

3.1.6 All physical changes, regardless of the scope of the change, must have the work performed in accordance with the Work Control process (i.e., MP-COPS-9.18, Work Management, Planning, and Control), which includes a Hazard Assessment, per INST-COPS-9.18.4, Hazard Assessment.

3.1.7 Documents and/or drawings that require changes as a result of a modification shall be controlled using the applicable procedure (i.e., MP-DOCS-18.4, Document Control, MP-CD&M-11.3, Design Control, MP-CD&M-11.5, Drawing Control, and/or MP-CD&M-11.7, Documenting Engineering Specifications).

3.1.8 All design changes and design analyses shall be controlled in accordance with MP-CD&M-11.3.

3.1.9 When researching proposed plant modifications, the engineer shall consider information on structures acquired from other DOE contractors as described in Appendix A, AMWTP Structures Acquired from Other DOE Contractors.

3.2 Temporary Physical Changes

3.2.1 Temporary physical changes of Class-III equipment allow operations to continue, due to a breakdown condition, until repair parts are available to perform corrective maintenance or will allow preventive maintenance and/or post maintenance testing to be performed without affecting other components and systems, in accordance with INST-CMNT-11.1.4, Temporary Physical Changes.

3.3 Software Change Control

3.3.1 Changes to software shall be systematically proposed, evaluated, documented, and approved to ensure the impact and rationale for making the change is carefully assessed prior to updating the production *baseline* (see def.), in accordance with MP-CD&M-11.2, Software Quality Assurance.

3.3.2 Those software changes that are evaluated to have a potential impact on the facility Authorization Basis shall have a facility modification proposal (FMP) form prepared per INST-CD&M-11.1.2, Facility Modification Proposal Preparation, and shall be reviewed for approval by the *Facility Change Group* (FCG; see def.).

3.4 Temporary Software Overrides

3.4.1 Temporary Software (Class-III) Overrides are intended to allow operations to continue, which cannot be corrected within a shift, due to the lack of replacement software, or will allow preventive maintenance and/or post maintenance testing to be performed without affecting other components and systems, in accordance with INST-CD&M-11.2.6, Temporary Software Overrides.

3.5 Tests and Investigations

3.5.1 Tests and *investigations* (see def.) (e.g., controlled *experiments* [see def.]) are developed, reviewed and approved in accordance with MP-CD&M-11.8, Equipment and Process Tests and Investigations.

3.5.2 The purpose of tests and investigations is to conduct controlled evaluations of plant equipment or processes (i.e., to evaluate potential changes or alternatives prior to making a permanent change decision).

3.5.3 Work plans or other documents used to conduct tests or investigations will specify all appropriate conditions and limitations necessary for safe performance and always restore the plant/equipment to original (design basis) configuration upon completion.

3.6 Unreviewed Safety Question Review

3.6.1 An applicability review will be performed for each change to determine whether a USQ is required. If required, the change will be evaluated as described in MP-NSPC-3.2 and as directed by the various change control implementing procedures.

3.7 Facility Modification Proposal Request

3.7.1 INST-CD&M-11.1.2 includes directions for the preparation, review, revision, approval, implementation, closeout, and cancellation of facility modifications. The FMP change process begins with a proposed modification to existing plant, process, or documentation including *design criteria* (see def.).

3.7.1.1 The FCG reviews and approves modifications that have the potential to impact the facility Authorization Basis.

3.7.1.2 The involvement of the FCG is determined by the results of a screening to evaluate the potential for impact to the facility Authorization Basis.

3.7.1.3 The role and make-up of the FCG is further defined in INST-CD&M-11.1.2.

3.7.1.4 Field implementation of physical modifications to SSCs must be performed in accordance with PD-CMNT-01, Nuclear Maintenance Management Program Description, and MP-COPS-9.18.

3.7.2 Temporary Modifications

3.7.2.1 The process described above in Step 3.7.1 is applied to *temporary modifications* (see def.) as well as to permanent modifications.

3.7.2.2 In the case of temporary modifications, at the time of preparing a facility modification proposal, a forecast must be made of the date when the plant will be returned to normal, i.e., modification removed.

3.7.2.3 The FMP cannot be considered complete until the configuration has been returned to its original condition. Temporary modifications are typically limited to 6 months, unless otherwise extended by the FCG chairman.

3.7.3 Urgent Modifications

3.7.3.1 Modifications required in the interests of safety during backshift hours should be done under FMP control; however, the plant shift manager has the responsibility of inserting or removing the safety hazard/concern until FMP approval is obtained.

3.7.3.2 If a modification is required in the interest of safety during a backshift, the FMP shall be presented to the FCG within 2 working days for review.

3.7.3.3 Where a modification is needed urgently to prevent an impending incident, the Nuclear Facility Manager (NFM) or designee is authorized to consider and, if appropriate, approve the change immediately.

3.8 Developing Technical Specifications

3.8.1 Technical specifications are developed, modified, reviewed and approved in accordance with MP-CD&M-11.7.

3.8.2 Technical specifications (and associated documents such as Design Proposal Drawings) are typically used to communicate technical requirements associated with design efforts that have been sub-contracted.

3.8.3 Where used, technical specifications will typically be referenced in a contract Statement of Work and made part of an issued contract and, as such, they will be subject to contract change control requirements.

3.8.4 General technical specifications associated with plant *configuration management* (see def.) and design standards may also be developed.

4.0 DEFINITIONS

Authorization Basis. The basis for safe operation of a DOE facility. The Authorization Basis is the total of those aspects of the facility design basis and operational requirements relied upon by DOE to authorize operations. The Authorization Basis is defined by the documents listed in the facility's DOE-approved Authorization Agreement, such as the facility's Documented Safety Analysis, Technical Safety Requirements, environmental permits, and other facility specific commitments made in order to satisfy DOE orders, policies, or other regulatory commitments.

Baseline. A product (computer program, documentation or both) that has been formally reviewed and approved for use. The product thereafter serves as the basis for further development and can be changed only through formal change control procedures.

Configuration management. The process of (1) identifying and defining the baselines associated with a software product or application; (2) controlling the changes to baselines and release of baselines throughout the lifecycle; (3) recording and reporting the status of baselines and the proposed and actual changes to the baselines; and (4) verifying the correctness and completeness of a product baseline.

Data quality objectives. The acceptance criteria for the WIPP waste characterization and certification data.

Design criteria. The documented project or contractual requirements that establish the basis for the design inputs, the information that defines the basic elements to which the design must be applied, and the codes, standards and regulatory requirements, and other requirements for those elements of design that delineates the compliance criteria.

Experiment. See Investigation.

Facility modification. Any change or addition to SSCs, software, or operational processes that are part of the plant's current Authorization Basis or Design Basis. Facility modification includes temporary changes or investigations/experiments and any changes that may affect Industrial Safety, Radiological Controls, or changes to equipment configuration that may not be covered by the Authorization Basis.

Facility change group. A team, comprised of the chairperson (plant manager or designee) and representatives from Environmental, Safety & Health (ES&H); Radiological Controls; Quality Assurance; Operations; TRU Programs; Nuclear Safety; Criticality Safety; Engineering; and Maintenance organizations, is responsible for the review and authorization of designated facility modifications, primarily those that have the potential to impact the facility Authorization Basis.

Investigation. A formally developed and approved tool used to perform temporary manipulations of SSCs or operations processes for the purpose of evaluating possible changes and alternatives as part of a decision-making process, or as otherwise approved by the System Engineering manager and NFM when an investigation will impact his facilities' SSCs.

Non-maintenance related failure. The failure of a component due to a manufacturers defect, structural failure or the failure to perform as designed when installed.

Process equipment. Equipment used specifically for the AMWTP throughput (i.e., for waste handling, treatment and disposition).

Structures, systems, and/or components. Structures are elements that provide support or enclose such as building, freestanding tanks, basis, dikes, and stacks. Systems are collection of components assembled to perform a function, such as piping, cable trays, conduit, or Heating, Ventilating and Air Conditioning. Components are items of equipment, such as pumps, valves, relays, or elements of a larger array, such as computer software, lengths of pipe, elbows, or reducers.

Temporary modification. Change to SSCs that will remain in place for a maximum of 6 months, or as determined by the FCG chairperson, then returned to original configuration. A temporary modification that cannot be removed by its scheduled date is resubmitted to the approving authority (FCG Chairperson or NFM) for reconsideration.

5.0 REFERENCES

(1) INST-CD&M-11.1.2, Facility Modification Proposal Preparation

(2) INST-CD&M-11.2.6, Temporary Software Override

(3) INST-CMNT-11.1.4, Temporary Physical Changes

(4) INST-COPS-9.18.4, Hazard Assessment

(5) MP-CD&M-11.2, Software Quality Assurance

(6) MP-CD&M-11.3, Design Control

(7) MP-CD&M-11.5, Drawing Control

(8) MP-CD&M-11.7, Documenting Engineering Specifications

(9) MP-CD&M-11.8, Equipment and Process Tests/Investigations

(10) MP-COPS-9.18, Work Management, Planning, and Control

(11) MP-DOCS-18.2, Records Management

(12) MP-DOCS-18.4, Document Control

(13) MP-NSPC-3.2, Unreviewed Safety Question Process

(14) MP-Q&SI-5.4, Identification of Nonconforming Conditions

(15) PD-CMNT-01, Nuclear Maintenance Management Program Description

6.0 RECORDS

Records generated by this procedure shall be classified in accordance with the table below and dispositioned in accordance with MP-DOCS-18.2, Records Management.

Record Description	Classification
MP-CD&M-11.1, Change Control, Case File	Nonpermanent WIPP/ENV1-J-1/Destroy 10 years after submittal

7.0 EXHIBITS

None

8.0 APPENDICES

Appendix A – AMWTP Structures acquired from other DOE Contractors

Appendix A –
AMWTP Structures Acquired from other DOE Contractors

AMWTP structures acquired from other DOE contractors include the following:

WMF-602	WMF-627	WMF-636	TR-14
WMF-610	WMF-628	WMF-652	
WMF-611	WMF-629	WMF-660	
WMF-613	WMF-630	WMF-669	
WMF-614	WMF-631	WMF-670	
WMF-615	WMF-632	WMF-703	
WMF-617	WMF-633	WMF-722	
WMF-618	WMF-634	WMF-734	
WMF-624	WMF-635	WMF-735	

Documentation for these structures, as well as systems and components contained within, may be contained in AMWTP Electronic Document Management System (EDMS), RWMC EDMS, or both. The engineer is responsible for fully researching documentation on both EDMS systems to ensure the configuration of the systems being modified, added, or removed is fully understood.

AMWTP has added/removed equipment from some of the above structures. The following provides a tabulation of these modifications. This list is for information only and not intended to be a comprehensive listing of all additions/removals:

- Support systems were modified by AMWTP to facilitate installation of a Central Characterization Project (CCP)-provided assay and RTR system in WMF-610.
- Stack monitoring equipment was removed on the East side of WMF-615.
- WMF-617 (previously an electrical maintenance shop) has been converted to a break/lunch room.
- A building extension was added to WMF-618.
- Soft sided containments have been added to WMF-628 and WMF-635.
- RTR, assay, drum coring, drum venting, material movement and support systems associated with this equipment have been added to WMF-634.

AMWTP modifications to acquired structures are fully documented in AMWTP EDMS.

Software Quality Assurance

Advanced Mixed Waste Treatment Project

Approval:

(*Signature on file. See DCR-13428.*) 05/27/14

Date

REVISION LOG

Revision Number	Date Approved	Pages Affected	Description of Revision
0	08/15/2002	All	Initial issue. DCR-2002-1331
1	02/05/2003	2, 7, 13, 14, 15, 23, 24, 25, 31, and 52-55	DCR-1975, Add Appendices I, J, and K, added statements to insure independent validation of code development and changes, added additional WIPP QAPD requirements, and minor editorial changes (aligning responsibilities to roles identified in section 4.1).
2	2/24/2003	All	Re-issue, see DCR-2003-2064
3	6/25/03	All	Address deficiencies identified during a self-assessment, see DCR-2003-2107. Incorporate changes in SQA procedures to accommodate production needs and for clarity.
4	7/9/03	All	Resolve review comments of Rev. 3 by CBFO; see DCR-2107-1.
5	28/Apr804	All	DCR-2363 Minor editorial changes. Added new section 4.5.1 Development of Test Plans, new section 4.5.6 Test reports. Added new Appendix J. Software Test Report Guidelines Streamlined Electronic Tracking process
6	5/25/04	1, 43	Add permit drivers for flow-up to RCRA IM; see DCR-3017
7	9/23/04	All	Incorporate comments from CBFO letter # 04-1682, and #04-1987, see DCR-2004-3241 and DCR-2004-3241-1.
8A	3/21/05	All	Incorporate corrective actions from CBFO Audit A-05-08, see DCR-2005-4185.
8B	3/31/05	All	Incorporate comments from CBFO letter 05-0856, see DCR-2005-4185-1.
9	08/25/05	Various	DCR-4515. Clarify use of guidelines and eliminate conflicts.

Revision Number	Date Approved	Pages Affected	Description of Revision
10	5/25/06	Global	DCR-4834. Major re-write to improve readability and process flow. Provide resolution to CAR # 10593 and NCR 11954. Implement corrective actions to resolve CBFO CAR 06-018 (AMWTP CAR 21748) Refer ICS SCRs to CD&M-11.2.5 Added SCR Flow Path to appendixes. Removed unused appendixes. Update document to current revision of MP-DOCS-18.4.
11	8/23/06	Page 28 3.10.5.1.1	DCR-5258. Incorporate language from CBFO QAPD that had been deleted in revision 10.
12	02/08/07	All	DCR-5359. Incorporate changes for resolution of comments from QA Assessment IA-06-06.
13	12/10/07	Various	DCR-6451. Added changes removed from MP-Q&SI-5.8.
14	08/06/08	Various	DCR-7374. Incorporated changes as requested in MAR 36524.
15	05/05/09	Various	DCR-7970. Changes made to resolve AI-43356 and CAR-42436, and CAR 43277. Editorial changes made per MP-DOCS-18.3, Developing Management Procedures. Changes made to “Operation Shift Manager” to “Plant Shift Manager” per DOCS-BLUESHEET-01. Cancel Form-1236 per DCR-8298 and change title to Form-1941 per DCR-8280.
16	04/21/11	Various	DCR-9934. Changes made to resolve AI-59403 associated with CAR-56882.
17	09/13/12	Various	DCR-11586. Changes made at the request of Waste Programs Manager to enable software development and testing activities to be performed prior to or in conjunction with SCR reviews and approvals. Incorporated BLUESHEET-DOCS-08 and ITG-BLUESHEET-154.
18	09/26/13	Various	DCR-12463. Updated to provide streamlined process for QC parameter changes.

Revision Number	Date Approved	Pages Affected	Description of Revision
19	03/06/14	Various	DCR-12848. Revised to modify USQ evaluation in the workflow.
20	04/09/14	Various	DCR-13253. Updated document to show location of stored documents; how WTS document numbers are created.
21	05/27/14	Various	DCR-13428. Updated document to clarify steps, line up with Test Track Pro and address steps that may be out of order.

TABLE OF CONTENTS

1.0 PURPOSE/SCOPE 1

2.0 ROLES AND RESPONSIBILITIES 2

3.0 PROCEDURE 4

3.1 Software Test Engineer Qualification 4

3.2 System Change Requests 7

3.3 Software Development 11

3.4 Software Testing 17

3.5 Software Installation 22

3.6 Software Configuration Management 24

3.7 Software Release Control 26

3.8 Nondestructive Assay Software Quality Control Parameter Updates 28

3.9 Software Procurement 29

3.10 Evaluation of Software Developed Under Other QA Programs 31

3.11 Software Retirement 32

3.12 Development of Supporting Documentation 32

3.13 Abnormal and Infrequent 38

4.0 DEFINITIONS 39

5.0 REFERENCES 43

6.0 RECORDS 44

7.0 EXHIBITS 45

8.0 APPENDICES 45

Appendix A - System Change Request Flow Path A1

AMWTP MANAGEMENT PROCEDURE		
MP-CD&M-11.2, Rev. 21	Issued: 05/28/14	Effective: 05/29/14
Software Quality Assurance		

1.0 PURPOSE/SCOPE

This procedure establishes requirements for purchasing, developing, testing, and controlling computer *software* (see def.) that is important to waste characterization and certification activities for the Advanced Mixed Waste Treatment Project (AMWTP). These requirements apply specifically to software systems intended for the purpose of the collection, reduction, production, manipulation and storage of data that supports the transuranic (TRU) waste program characterization, transportation, and certification processes.

This procedure applies to *Class I* (see def.) and *Class II* (see def.) software, and is applied to *Class III* (see def.) software using a graded approach. Changes to existing Class III Integrated Control System (ICS) software will be controlled in accordance with INST-CD&M-11.2.5, Integrated Control System Software Modifications. *System Data Change Requests* (SDCRs; see def.) will be performed in accordance with INST-CD&M-11.2.3, System Data Change Request.

This procedure is not applicable to "systems software" (e.g., operating systems, administrative and management systems, system utilities, compilers, assemblers, translators, interpreters, query languages, word processing programs, spreadsheets, database managers, and graphing programs) or other software that does not generate data that are used in the formulation of conclusions.

Firmware or automated *process control equipment* (see def.) that is not changed outside the user variable parameters allowed by the vendor are exempt from this procedure and may be tested and/or calibrated as hardware in accordance with the applicable project level procedures (i.e., proportional derivative controls, embedded firmware, operating systems, etc.) Also, software which is an integral part of measuring and test equipment (M&TE) is exempt from the controls of this procedure when the M&TE are verified periodically as part of MP-CMNT-10.5, Measuring and Test Equipment Program.

All AMWTP personnel and subcontractors who develop, acquire, maintain, install, or use computer software that is used at the AMWTP for waste characterization, certification, transportation, or operations shall be subject to the requirements within this procedure.

(DOE-CBFO-94-1012)

2.0 ROLES AND RESPONSIBILITIES

Performer	Responsibilities
Independent Technical Reviewer	• Reviews the technical adequacy of a document or design.
Nuclear Facility Manager or Designee	• Reviews a new *system change request* (SCR; see def.) and associated *software change screening* (SCS; see def.) for criticality and nuclear safety affects on operations.
Operations	• Ensures that the change proposed will NOT have an adverse effect on operation • Identifies procedure and/or process impact affected by the change • Performs analysis for recommended change.
Quality Assurance (QA)	• Reviews of Class I and II software development verification and validation documents, SCRs, SDCRs and applicable forms to ensure QA Program, Carlsbad Field Office (CBFO) Quality Assurance Program Description (QAPD) or other CBFO requirements have been met • With system manager, approves temporary changes requiring extensions.
SCR Field Group (see def.)	• Performs initial review of an SCR to ensure adequate information is provided and that it represents a valid change.
SCR Initiator	• Initiates a system change request using the Test Track Pro software.
Software Administrator or Designee	• Controls electronic software program files such as SCRs and SDCRs • Controls *baseline* (see def.) version of software applications through the use of *Polytron Version Control System* (PVCS; see def.).
Software Admin Reviewer	• Ensures correct documentation is being processed throughout the development and modification of software • Acts as the gatekeeper of build authorizations and interfaces with Information Technology (IT), Operations, TRU Programs, and QA.
Software Developer	• Designs and develops software and associated documentation based on established user requirements.
Software Engineer	• Maintains IT network, ICS, or Data Management System components overseen by the System Manager(s) or Designee • Conducts and documents the SCS for new SCRs.

Performer	Responsibilities
Software Impact Analyst	• Analyzes a software change for impacts to existing systems and/or processes.
Software Parameter Update (SPU) Initiator	• Initiates a software parameter update using the Test Track Pro software.
Subject Matter Expert (SME)	• Provides technical direction based on experience or knowledge in a specified field.
System Change Group (see def.)	• Evaluates new SCRs to ensure that the change will not have an adverse effect on safe, compliant operations • Approves new SCRs for work • Re-evaluate SCRs greater than 12 months old to determine if the SCRs status, approvals, and/or priority are still valid.
System Engineer	• Provides guidance to software engineers as needed regarding the design and operation of mechanical systems affected by software changes.
Cognizant System Engineer (CSE)	• Reviews of Class I or II SCRs and associated SCSs for safety and operability affects on assigned systems • Provides technical input into the design, operation, maintenance, and testing of assigned system(s) as needed.
System Manager or Designee	• Oversees the software development processes • Makes work assignments • Ensures that the priority and software class assigned to a new SCR are appropriate • Reviews a new SCR and associated SCS for criticality and nuclear safety affects on operations • Ensures SCRs aging over 12 months are re-evaluated to determine if the SCR's status, approvals, and/or priority are still valid • Reviews SCRs that have been incrementally developed for rejection • Approves software change and testing documentation • Works with software developer to determine design and user requirements • Develops criteria to determine when software can be retired from use and the methods to prevent the use of software that is no longer controlled • Schedules periodic reviews of software code to assure the *secure code* (see def.) is properly identified.

Performer	Responsibilities
Software Test Engineer	• Performs validation tests independent of code development or code changes • Obtains testing qualification in accordance with this document.
Software Group Lead	• Ensures each software test engineer qualification has not expired prior to assignments • Assigns SCRs to software test engineers • Works with software test engineer to determine testing criteria.
Test Case Preparer	• Prepares test case(s) based on established software requirements • Resolves any review comments, document resolution of comments, and sign and date the cover page of the test case.
Training Department	• Updates qualification status and maintains QCSWTSTs
TRU Programs	• Ensures that the change proposed will NOT have an adverse effect on Waste Isolation Pilot Plant (WIPP) data and/or WIPP requirements • Identifies procedure and/or process impact affected by the change • Performs analysis for recommended change.
User	• Uses software system and/or the system data.
USQ Evaluator	• Evaluates software changes using the *Unreviewed Safety Question* (USQ; see def.) process in accordance with MP-NSPC-3.2, Unreviewed Safety Question Process.

3.0 PROCEDURE

NOTE: *The steps in this procedure may be performed out of sequence and not all steps in the procedure will be applicable to every SCR.*

3.1 Software Test Engineer Qualification

3.1.1 General

3.1.1.1 Software Test Engineer: Maintain appropriate training and qualification to be capable of evaluating applicable tests and results within the scope of their qualification.

3.1.2 Qualifying Software Test Engineers

3.1.2.1 Software Test Engineer: Be capable of performing and evaluating engineering tests within their work scope.

3.1.2.2 Software Test Engineer: Qualifications are based on their education, experience, training, and demonstrated competence within the scope of their qualification.

3.1.2.3 Software Test Engineers: Maintain sufficient knowledge of assigned systems and related AMWTP procedures, instructions, and requirements.

3.1.2.4 System Manager or Designee: Evaluate the capability of software test engineer candidates based on their experience, education, indoctrination, training, test results (if used), or demonstrated abilities, and any previous qualifications.

3.1.2.5 Qualified System/Software Engineers: Perform duties as a software test engineer provided they meet the requirements of this procedure.

3.1.3 Completing, Approving, and Maintaining Software Test Engineer Record of Qualification

NOTE 1: *QCSWTST, Test Engineer Record of Qualification, will be approved prior to any candidate's commencement of actual testing activities (test performance, data collection, and results evaluation, etc.).*

NOTE 2: *System manager or designee may revoke QCSWTST based on performance or at his/her discretion.*

3.1.3.1 Software Group Lead: Initiate and complete QCSWTST, to document the qualifications and capabilities of the candidate software test engineers.

3.1.3.1.1 Ensure the specific qualification scope of the candidate software test engineer is clearly documented on QCSWTST.

3.1.3.2 Software Test Engineer: Sign QCSWTST documenting concurrence with qualification scope.

3.1.3.3 System Manager or Designee: Sign QCSWTST where indicated.

3.1.3.4 Transmit a copy of the software test engineer's qualification to the Training Department.

3.1.3.5 Training Department: Maintain the completed QCSWTSTs.

3.1.4 Requalification of Software Test Engineers

3.1.4.1 Software Group Lead: Ensure that each software test engineer's qualification has not expired and initiate a timely requalification using QCSWTST.

3.1.4.2 Transmit copies of the software test engineers requalification to the Training Department.

3.1.4.3 Training Department: Maintain requalification documentation.

3.1.5 Qualification Review of Software Test Engineers Experiencing Interrupted Service

3.1.5.1 If a software test engineer job duties have been interrupted for a period of 6 months or longer, the software test engineer's qualifications shall be reviewed.

3.1.5.2 System Manager or Designee: Revoke/suspend a qualification, if needed, based upon review of current qualification or qualification requirements.

3.1.5.2.1 Ensure revoking or suspension of software test engineer's qualifications is stated on the software test engineer's QCSWTST.

3.1.5.2.2 Transmit QCSWTST to the Training Department to update the qualification status.

3.1.6 Employment Termination and Revoking a Software Test Engineer's Qualification

3.1.6.1 System Manager or Designee: Revoke qualifications when a software test engineer's employment is terminated.

3.1.6.2 Reinstate qualifications if a software test engineer returns to employment within 6 months.

3.1.6.3 Transmit a copy of software test engineer's revocation or reinstatement to the Training Department.

NOTE 1: *This document provides instructions for maintaining the Software Quality Assurance process. Although the directed steps must be performed as stated, signoff of step performance or having the procedure at hand as steps are performed is not required.*

NOTE 2: *Portions or all of this procedure may be performed using an electronic change tracking* software package *(see def.).*

NOTE 3: Software life cycle *(see def.) phases include activities from the identification of user requirements through the retirement of baseline software.*

3.2 System Change Requests

NOTE 1: *The development, modification, installation, or retirement of controlled software will be tracked with the tracking software "Test Track Pro" in the form of an SCR or a SDCR.*

NOTE 2: *The reinstallation of controlled software will be tracked using an SCR in accordance with Section 3.7.*

NOTE 3: *The following process does not include specific step-by-step instructions for how to use Test Track Pro.*

3.2.1 SCR Initiator: Initiate a new SCR as follows:

NOTE: *The information entered into the Problem Description field should include a brief description of the customer's intent (e.g., e-mail), a description of the problem, and a description of the desired outcome.*

3.2.1.1 Input basic information and problem description as required by Test Track Pro software.

3.2.1.2 If a temporary solution has already been developed, then document the temporary solution information within the SCR.

3.2.1.3 If the SCR is being initiated as part of or as the result of a physical change to the plant, then add the associated *facility modification* (see def.) *proposal* (FMP; see def.) number to the SCR.

3.2.2 SCR Field Group: Review the SCR as follows:

3.2.2.1 Ensure the information within the SCR is accurate, complete, and clearly written.

3.2.2.2 Ensure that the change being proposed within the SCR is valid and that it represents the most appropriate means of accomplishing the desired outcome.

3.2.2.3 If it is determined that the SCR is NOT valid, then submit the SCR to the Software Administrator, or designee, with a recommendation for rejection and exit this procedure.

3.2.2.4 Determine which forms, hardware, and/or software will be affected by the change and document the affected items within the SCR.

3.2.2.5 Determine if document changes and/or additional training will be required as a result of the change and document that information within the SCR.

3.2.2.6 If document changes are required, then ensure the changes are initiated in accordance with MP-DOCS-18.4, Document Control.

NOTE 1: *At the direction of the System Manager or designee software change* prototypes *(see def) may be developed and tested prior to or in conjunction with SCR reviews and approvals. Such prototypes are created at-risk and must be verified against the approved SCR prior to final installation. Any changes resulting from the review and approval processes must likewise be incorporated into prototypes and tested accordingly prior to final installation.*

NOTE 2: *A sufficient description of the software changes is needed in order for a valid SCS to be performed. Additional changes made subsequent to the SCS that alter the overall scope or intent of the original change description will require the SCS to be re-performed.*

3.2.3 System Manager or Designee: If a software change prototype is to be developed and/or tested prior to or in conjunction with SCR approvals, then document prototype approval to work within the SCR.

3.2.4 Software Engineer: If the proposed software change is **NOT** already associated with an FMP due to related hardware changes, then evaluate FMP applicability by performing a SCS per Form-1685, Software Change Screening, and attach an electronic copy of the screening to the SCR.

3.2.5 Software Engineer: If the software change screening results require an FMP, then verify the SCR requestor has initiated an FMP in accordance with INST-CD&M-11.1.2, Facility Modification Proposal Preparation, and document the FMP number within the SCR.

NOTE: *Test Track Pro automatically sends out notifications for SCRs that are older than 12 months.*

3.2.6 System Change Group: For previously evaluated SCRs that are older than 12 months, members of the System Change Group shall re-evaluate the SCR(s) to determine if the current status, approvals, and/or priority are still valid.

3.2.6.1 If SCR is determined to be no longer valid, then document in Test Track Pro and proceed to Step 3.2.9.

3.2.6.2 If SCR is determined still valid, then document in Test Track Pro and continue process.

3.2.7 System Change Group: For changes affecting Class I or Class II systems, evaluate the SCR as follows:

3.2.7.1 Operations: Ensure that the change proposed will NOT have an adverse effect on operations.

3.2.7.2 TRU Programs: Ensure that the change proposed will **NOT** have an adverse effect on WIPP data and/or WIPP requirements.

3.2.7.3 Quality Assurance: Ensure that the change proposed will NOT have an adverse effect on quality affecting activities or WIPP data quality objectives and that it complies with established procedures.

3.2.7.4 Nuclear Facility Manager or Designee: Ensure that the change proposed by the SCR will not have an adverse affect on safe, compliant operations, with specific emphasis on criticality and nuclear safety effects.

3.2.7.4.1 Review the associated SCS, if applicable.

3.2.7.4.2 For Class 1 systems, review Form-1342, Authorization to Work on a Safety Significant (Class-1) SSC.

3.2.7.5 Cognizant System Engineer: Ensure that the change proposed will not have an adverse affect on the system's ability to safely perform its intended function(s).

3.2.7.5.1 Review the associated SCS, if applicable.

3.2.7.6 System Manager or Designee: Ensure that the priority assigned to the SCR is appropriate based on the need for the change and the availability of resources.

3.2.7.7 System Manager or Designee: Ensure that the software class assigned to the SCR is appropriate based on which systems and/or software will be affected.

3.2.7.8 System Manager or Designee: Ensure that the change proposed by the SCR will not have an adverse effect on safe, compliant operations, with specific emphases on criticality and nuclear safety effects.

3.2.7.8.1 Review the associated SCS, if applicable.

3.2.8 System Change Group: For changes affecting Class III systems, evaluate the SCR as follows:

3.2.8.1 Nuclear Facility Manager or Designee: Ensure that the change proposed by the SCR will not have an adverse effect on safe, compliant operations.

3.2.8.1.1 Review the associated SCS, if applicable.

3.2.8.2 System Manager or Designee: Ensure that the priority and software class are correct.

3.2.8.3 System Manager or Designee: Ensure that the change proposed by the SCR will not have an adverse effect on safe, compliant operations.

3.2.8.3.1 Review the associated SCS, if applicable.

3.2.9 System Change Group: If it is determined that the proposed change cannot be completed, then submit the SCR to the software administrator or designee with a recommendation for rejection and exit this procedure.

3.2.10 System Change Group: Approve the SCR.

3.2.11 System Manager or Designee: Review and resolve any system change group comments.

3.2.12 System Manager or Designee: Approve the SCR.

3.3 Software Development

NOTE 1: *Software development shall proceed and be controlled in a traceable, planned, and orderly manner.*

NOTE 2: *The use of a* traceability matrix *(see def.) is a best management practice in which each uniquely identified requirement is linked to design element(s), which are in turn linked to Test Case steps. This creates a simple means of proving that each requirement is implemented and proven to be operational in the final product. In situations where a separate user requirements specifications (URS) and software design descriptions (SDD) are not prepared for a software change, similar information providing this capability should be included in the applicable SCR.*

NOTE 3: *When incremental software development is unavoidable, a review of the complete function will be done by the System manager or designee prior to proceeding and the training required for each increment will be completed.*

NOTE 4: *At the direction of the System Manager or designee, software change prototypes may be developed prior to or in conjunction with SCR reviews and approvals. Such prototypes are created at-risk and must be verified against the approved SCR prior to final installation. Any changes resulting from the review and approval processes must likewise be incorporated into the prototypes.*

3.3.1 System Manager or Designee: Assign software engineer(s) to perform software development.

3.3.2 Software Developer: If a new software project is to be developed, then prepare a software quality plan utilizing Form-1172, Software Quality Plan.

3.3.2.1 Attach Form-1172 to the SCR.

NOTE 1: *Depending on the complexity of the software change, software requirements can be documented directly within the applicable SCR or through the use of URS, SDD, and/or other engineering approved requirements documents.*

NOTE 2: *WTS-related supporting documentation (i.e., URS, SDD, and test cases) are stored in PVCS under WTS R4/WTS Docs – Current.*

NOTE 3: *WTS-related supporting documentation number identifiers are assigned using the document number generator found on the AMWTP homepage.*

3.3.3 System Manager or Designee: Work with the assigned software engineers to determine the appropriate level of requirements documentation to be completed based on the following:

3.3.3.1 If the software change affects the existing design requirements of a safety-significant system, then an engineering approved requirements document shall be used, and the approved change shall be posted to the affected existing design requirements for subsequent update.

3.3.3.2 If the software change does NOT affect the existing design requirements of a safety-significant system, then the software requirements may be documented either within an engineering approved requirements document, or within the applicable SCR, based on the details and complexity of the software change.

3.3.4 Software Developer: Work with the SCR initiator and/or user as needed to define the software requirements.

3.3.4.1 Software requirements shall, as applicable, address the following:

- Functionality — the functions the software performs.
- Performance — time-related issues of software operation such as speed, recovery time, and response time.
- Constraints — limits imposed on implementation activities; any elements that will restrict design options.
- Attributes — non-time-related issues of software operation such as portability, acceptance criteria, access control, and maintainability.
- External interfaces — interactions with people, hardware and other software.

3.3.5 Software Developer: Document the software requirements in an engineering approved requirements document or directly within the SCR, as appropriate.

3.3.5.1 If a new URS is to be used, then develop the URS in accordance with Section 3.12.1, and reference the URS within the SCR.

3.3.5.1.1 Document the URS on Form-1732, User Requirement Specification.

3.3.6 Software Developer: Develop and document the software design based on established software requirements.

3.3.6.1 If a new SDD is to be used, then prepare the SDD in accordance with Section 3.12.2 and reference the SDD within the SCR.

3.3.6.1.1 Document the SDD on Form-1731, Software Design Description.

3.3.7 Software Developer: Ensure that any forms, hardware, and/or software that will be affected by the change have been identified within the SCR.

3.3.8 Software Developer: Ensure that any document changes and/or additional training that will be required as a result of the change have been identified within the SCR.

3.3.9 Software Developer/Software Administrator or Designee: If document changes are required, then ensure the changes are initiated in accordance with MP-DOCS-18.4.

3.3.10 Software Developer: If changes are being made to existing baseline software (as opposed to newly developed software), then obtain the necessary software modules in accordance with INST-CD&M-11.2.1, Software Version Control.

3.3.10.1 Update SCR with the name and version number of the software obtained.

3.3.11 Software Developer: Develop software based on software design requirements.

NOTE 1: *Any changes made to the software design requirements during the development process will be subject to the same level of review as the original design requirements.*

NOTE 2: *Changes to the overall scope or intent of software design requirements made subsequent to the SCS will require that a new SCS be performed.*

3.3.12 Software Developer: If necessary, update software design requirements to reflect changes identified during development/modification.

3.3.12.1 Ensure any changes to the design requirements of a safety-significant system are posted to the affected existing design requirements for subsequent update.

3.3.13 Software Developer: Document the software development/modification details within the SCR.

3.3.14 Software Developer: Perform preliminary checks to ensure that programming *errors* (see def.) are identified and corrected and that the software change adequately meets the user requirements.

3.3.15 Software Developer: Ensure any newly developed software modules are placed under *configuration management* (see def.) control in accordance with Section 3.6.

3.3.15.1 Update the SCR with the name and version number of the software modules placed under configuration management control.

3.3.16 Software Developer: If any changes were made to existing software modules, then ensure the software baseline is updated in accordance with INST-CD&M-11.2.1.

3.3.16.1 Update the SCR with the name and version number of the software modules that were updated in the software baseline.

3.3.17 Software Developer: If development was completed as a prototype prior to or in conjunction with SCR approvals, perform the following:

3.3.17.1 When SCR approvals are complete, verify that the changes developed under the prototype remain consistent with the final scope of the approved SCR.

3.3.17.1.1 If the prototype changes are found to be inconsistent with the scope of the approved SCR, then perform additional development in accordance with Section 3.3 or revise the approved scope in accordance with Section 3.2 as required to resolve the inconsistencies.

3.3.18 Software Engineer: Ensure *user acceptance testing* (see def.; UAT) is performed on all software changes, unless UAT exception is granted by the system manager or designee

3.3.19 If the associated SCR has not been granted exception from the UAT, then ensure UAT is performed prior to the *release* (see def.) of the affected software

3.3.20 Software Developer: Ensure the SCR is assigned to an independent, technically competent Software Engineer to perform an *impact analysis* (see def.).

3.3.21 Software Impact Analyst: Perform an impact analysis of software changes as follows :

3.3.21.1 Use Form-1941, Software Change Impact Analysis, on Class I and Class II systems **ONLY**.

3.3.21.2 An impact analysis on Class III systems will be performed in accordance with INST-CD&M-11.2.5.

3.3.21.3 Review the software change for unintended effects.

3.3.21.4 Review the software change for effects to previously completed software that would require the performance of *regression testing* (see def.).

3.3.21.5 Review the software change for effects to criticality controls that would require the performance of online testing.

3.3.21.6 Document the results within the SCR.

3.4 Software Testing

NOTE 1: *For general guidance regarding the software testing process, refer to OPSTG-0001, Testing Guidelines for Advanced Mixed Waste Treatment Project.*

NOTE 2: *Depending on the complexity of the software change, testing criteria can be documented directly within the applicable SCR or through the use of Test Case documents.*

NOTE 3: *Changes that require ICS testing will be tested on the ICS/Waste Tracking System (WTS) test bed in accordance with INST-CD&M-11.2.5, in addition to any testing performed within this procedure.*

NOTE 4: *Software test engineers will have a qualification as a tester in accordance with this document.*

NOTE 5: *At the direction of the System Manager or designee, software change prototypes may be tested prior to or in conjunction with SCR reviews and approvals. Such prototypes are created at-risk and must be verified against the approved SCR prior to final installation. Any changes resulting from the review and approval processes must likewise be incorporated into the prototypes and tested accordingly.*

NOTE 6: *WTS test cases are stored in PVCS under WTS R4/WTS Docs – Current.*

NOTE 7: *WTS test case number identifiers are assigned using the document number generator found on the AMWTP homepage.*

3.4.1 Software Engineer: Ensure *user acceptance testing* (see def.; UAT) is performed on all software changes, unless UAT exception is granted by the system manager or designee.

3.4.2 If the associated SCR has not been granted exception from the UAT, then ensure UAT is performed prior to the *release* (see def.) of the affected software.

3.4.2.1 Document the UAT details within the SCR.

3.4.3 Software Group Lead or Designee: Assign a software test engineer(s) who is independent of the software development to perform testing of the software.

3.4.4 Software Group Lead or Designee: Work with the assigned software test engineer(s) to determine appropriate testing requirements, based on the details and complexity of the software change.

3.4.4.1 Determine specific test steps or test case to be used.

3.4.4.1.1 If it is necessary to create a new test case, develop the test case in accordance with Section 3.12.3 and reference the test case within the SCR.

NOTE: *Test steps are included for both positive and negative outcomes.*

3.4.4.1.2 Indicate in each test step the action to be taken AND the expected result that will indicate success.

3.4.4.2 Perform all testing identified in the impact analysis including regression testing, in addition to any testing recommended by the Software Group Lead.

NOTE: *Test reports are generally created when test cases have been prepared separately from the information contained in an SCR.*

3.4.4.3 Determine whether any test reports will be generated.

3.4.4.3.1 If it is necessary to generate a test report, then prepare the test report in accordance with Section 3.12.4 and attach the test report to the SCR.

3.4.4.4 Determine whether online testing will be performed.

3.4.4.4.1 Ensure software changes with the potential to affect criticality controls have a component of online testing.

3.4.4.4.2 Ensure procured software is online tested to verify the functional capability of the software and the acceptability of the supplier's supporting documentation.

3.4.5 Software Test Engineer(s): Perform testing of software as follows:

3.4.5.1 Obtain a copy of the applicable software module(s) in accordance with INST-CD&M-11.2.1.

3.4.5.1.1 Update the SCR with the name and version number of the software obtained for testing.

3.4.5.2 Perform testing in accordance with established testing criteria.

NOTE 1: *Test steps or sequences may be redline-changed by the software test engineer during testing to allow continuance of the test. These changes will be clearly identified as part of the test record.*

NOTE 2: *Any change made to the testing criteria during the testing process will be subject to the same level of review as the original testing criteria.*

3.4.5.3 If necessary, update testing criteria to reflect changes identified during testing.

3.4.5.4 Verify the results of all test steps.

3.4.5.5 Ensure the following test information is documented within the applicable SCR and/or test case:

- Computer program tested
- Computer hardware used
- Test equipment and calibrations, where applicable
- Date of test
- Tester or data recorder
- Simulation models used, where applicable
- Test problems
- Results and acceptability
- Action taken in connection with any deviations noted
- Persons evaluating the test results.

NOTE: *A test is not complete until all failed steps have either passed or been identified for further work in another test case or SCR.*

3.4.5.6 If procured software fails testing, then document the failure within the SCR and notify the software supplier of the failure.

3.4.5.7 If internally developed software fails testing, then document the failure within the SCR and assign the SCR to the software developer for further development in accordance with Section 3.3.

3.4.5.7.1 Re-perform testing once the additional development is completed.

3.4.5.8 If testing was completed as a prototype prior to or in conjunction with SCR approvals, then perform the following:

3.4.5.8.1 When SCR approvals are complete, verify that the changes tested under the prototype remain consistent with the final scope of the approved SCR.

3.4.5.8.1.1 If the prototype changes are found to be inconsistent with the scope of the approved SCR, then assign the SCR to the software developer for resolution in accordance with Section 3.3.

3.4.5.8.1.2 If additional development is required, then re-perform testing once the additional development is completed.

3.4.5.9 If the software passes testing, then assign the SCR to the software administrator or designee to obtain reviews and approval to load to plant.

3.4.5.10 Once all necessary approvals have been obtained and the software has been loaded to plant (as specified in Section 3.5) perform online testing, as required.

3.4.5.11 Document the online testing results within the SCR, as applicable.

NOTE: *Class III software that is required to maintain operations and does not affect data quality or safe operations may be modified online (i.e., without removing the software) in accordance with INST-CD&M-11.2.5.*

3.4.5.12 If online testing of procured software fails, then perform the following:

3.4.5.12.1 Remove the affected software modules from plant.

3.4.5.12.2 Notify the software supplier of the failure.

3.4.5.13 If online testing of internally developed software fails, then document the failure within the SCR and perform the following:

3.4.5.13.1 Remove the affected software modules from plant and demote them back to development.

3.4.5.13.2 Assign the SCR to the software developer for further development in accordance with Section 3.3.

3.4.5.13.2.1 Re-perform testing once the additional development is complete.

3.4.5.14 If online testing passes, assign the SCR to the software administrator or designee for final closure.

3.4.5.15 If a test report was used, attach the completed report to the SCR.

3.5 Software Installation

NOTE: *All software modules loaded to a production system shall be from an approved and controlled baseline source (e.g., PVCS).*

3.5.1 Software Administrator or Designee: Verify that all testing is completed and that all testing documentation has been included in, referenced in, or attached to the SCR.

3.5.2 Software Administrator or Designee: Submit the SCR for USQ evaluation.

NOTE 1: *A sufficient description of the software changes is needed in order for a valid USQ evaluation to be performed. Additional changes made after the USQ evaluation will require the USQ evaluation to be re-performed.*

NOTE 2: *If the USQ evaluation reveals that an USQ exists (i.e., positive USQ determination), Department of Energy (DOE) must approve an amendment to the safety basis in accordance with MP-NSPC-3.2, or the change must be revised such that a USQ does not exist, prior to implementing this change.*

3.5.3 USQ Evaluator: Perform a USQ evaluation in accordance with MP-NSPC-3.2.

3.5.3.1 Attach the USQ document to the SCR.

3.5.3.2 Select USQ Evaluation from the workflow.

3.5.3.3 Assign to Software Administrator or designee with a comment referencing the USQ number.

3.5.4 Software Administrator or Designee: Send a notice or assign the SCR to the system manager or designee and QA (Class I or II systems only) for review and approval.

3.5.5 Quality Assurance: If the SCR applies to a Class I or Class II system, then review, and approve the SCR.

3.5.5.1 Review the SCR documentation for completion of verification and validation activities.

3.5.6 System Manager or Designee: Review and approve the SCR.

3.5.6.1 Review the impact analysis associated with the SCR as part of the SCR review and approval (internally developed software only).

3.5.7 System Manager or Designee: Assign the SCR to the software admin reviewer or designee for review.

3.5.8 Software Admin Reviewer or Designee: Perform review as follows:

3.5.8.1 Verify all necessary design, development, and testing documentation is complete.

3.5.8.2 Verify all necessary reviews and approvals have been performed.

3.5.8.3 If documentation updates and/or training is required, then ensure these activities are performed prior to or in conjunction with the software installation.

3.5.8.4 Update SCR accordingly.

3.5.9 Software Admin Reviewer or Designee: Assign the SCR to the System manager or designee for approval to load to plant (approval to build).

3.5.10 System Manager or Designee: Review and approve the SCR to load to plant.

3.5.11 System Manager or Designee: Ensure that the SCR build is listed on the Plan of the Day (POD) and that the plant shift manager is notified of the build.

3.5.12 Software Engineer: Obtain a copy of the applicable software module(s) in accordance with INST-CD&M-11.2.1.

3.5.13 Software Engineer: Load the approved software module(s) to plant.

3.5.14 Software Engineer: Document installation details within the SCR.

3.5.15 Software Engineer: If online testing is to be performed, assign the SCR to the software test engineer(s) for online testing.

3.5.16 Software Admin Reviewer/Software Administrator or Designee: Once installation and, if applicable, online testing has been completed, perform the following:

3.5.16.1 Verify that required document changes and training have been completed.

3.5.16.2 Ensure that any supporting documentation has been attached to the SCR and/or submitted to Records Management or Engineering Document Control, as applicable.

3.5.16.3 Close the SCR.

3.5.16.4 If applicable, notify the FMP coordinator that the SCR is complete.

3.6 Software Configuration Management

NOTE 1: *Software shall be placed under configuration management control as each new configuration item is approved in accordance with this section. Once software has been placed under configuration management control the software's version will be maintained in accordance with INST-CD&M-11.2.1.*

NOTE 2: *Dynamic and/or equipment-specific software parameters important to the operation of production systems that are changed as a part of the normal operating process (i.e., headspace gas sampling (HGAS) instrument-specific parameters) will be backed up on a scheduled basis, as designated on Form-1743, Data Backup Request, by the IT Department. Re-installation of these parameters will be performed on an as-needed basis under the guidance of a representative from the IT department.*

3.6.1 Software Administrator or Designee: Ensure that any proposed software change/addition has been appropriately evaluated, documented, and approved through the SCR process in accordance with Section 3.2.

3.6.2 Software Administrator or Designee: Ensure software has been developed or procured in accordance with Section 3.3 or Section 3.8, as applicable.

3.6.3 Software Administrator or Designee: If the affected software has already been placed under configuration management control (e.g., already controlled through PVCS), then the software version shall be updated in accordance with INST-CD&M-11.2.1, and the remaining steps in this section do not apply.

3.6.4 Software Administrator or Designee: Ensure the following information is documented within the applicable SCR(s):

- Name and version number of software
- Source code files and date of creation
- Number of diskettes or CDs in the baseline series, if applicable
- References or attachments for all supporting documentation.

3.6.5 Software Administrator or Designee: Submit software code and supporting documentation to the software library and/or the PVCS.

3.6.6 Software Administrator or Designee: Review all SCRs and supporting documentation associated with the software code being placed under configuration management control.

3.6.6.1 Verify that the software code has been approved through the SCR process.

3.6.6.2 Verify that all documentation is complete and accurate.

3.6.7 Software Administrator or Designee: Ensure that the affected software's name, version, and date of creation are entered into PVCS.

3.6.8 Software Administrator or Designee: Document the completion of the configuration management control update in the SCR.

3.6.9 Software Administrator or Designee/System Manager or Designee: Ensure that the *Baseline Inventory and Software Classification List* (see def.) is updated in accordance with INST-CD&M-11.2.2, Software Inventory Classification, as necessary.

3.7 Software Release Control

NOTE 1: *All software modules loaded to a production system shall be from an approved and controlled baseline source (e.g., PVCS).*

NOTE 2: *This section describes the steps needed to distribute controlled copies of approved software for re-installation onto the production environment. Newly developed or modified software will be installed in accordance with Section 3.5.*

NOTE 3: *Dynamic and/or equipment-specific software parameters important to the operation of production systems that are changed as a part of the normal operating process will be backed up on a scheduled basis, as designated on Form-1743, by the IT Department. Reinstallation of these parameters will be performed on an as-needed basis under the guidance of a representative from the IT Department.*

NOTE 4: *For specific steps regarding the reinstallation and checkout of HGAS software, the user may refer to the following controlled documents:*

- *For installation of the Agilent ChemStation software, the user may refer to software source and configuration file 221-0003, MSD ChemStation Software Installation Manual.*
- *For general configuration of the HGAS software suite refer to Operation and Maintenance document 221-0002, HGAS III Operation and Maintenance Manual.*

3.7.1 System Engineer/Software Engineer: Identify the current version for the desired software module(s) AND verify that they have been approved for use.

3.7.2 System Engineer/Software Engineer: Initiate an SCR to document the reinstallation and checkout of approved software onto the production environment.

3.7.2.1 Specify the name(s) and version number(s) for the software module(s) to be used.

3.7.2.2 Describe the reasoning for reinstalling the applicable software module(s).

3.7.3 System Manager or Designee: Review the new SCR for accuracy and validity.

3.7.4 System Manager or Designee: Approve the new SCR and assign it to the System Engineer/Software Engineer for installation.

3.7.5 System Manager or Designee: Ensure that the SCR is listed on the POD and that the plant shift manager is notified of the installation.

3.7.6 System Engineer/Software Engineer: Obtain a copy of the desired software modules directly from PVCS or from the software administrator or designee, as appropriate.

3.7.7 System Engineer/Software Engineer: Install the approved software onto the production environment.

3.7.8 System Engineer/Software Engineer: Document installation details within the SCR.

3.7.8.1 Specify the name(s) and version number(s) of the software module(s) used.

3.7.9 System Engineer/Software Engineer: Perform functional testing as needed to verify successful installation.

3.7.10 Quality Assurance: If the SCR applies to a Class I or Class II system, review the SCR and approve for final closure.

3.7.11 System Manager or Designee: Review the SCR and approve for final closure.

3.7.12 Software Administrator or Designee: Verify that the SCR is complete and that all necessary approvals have been received for final closure.

3.7.13 Software Administrator or Designee: Close the SCR.

3.8 Nondestructive Assay Software Quality Control Parameter Updates

NOTE 1: *Quality control parameters for the NDA equipment are periodically reviewed and new parameters are generated as required by AMWTP, or CCP EAs to meet WIPP data quality objectives and as part of a statistical evaluation and control scheme for the NDA equipment. The NDA equipment's performance against a known standard is tracked and trended to reveal abnormal machine variability and performance. QC parameters are derived from initial measurements of known standards and are periodically reviewed and adjusted as additional measurements are performed in accordance with existing approved procedures. This section provides the mechanism by which the updated QC parameter generated shall be implemented and tracked under a software parameter update database.*

The NDA QC parameters are a design feature of the NDA software which are intended to be a user changeable parameter. The existing NDA software provides mechanisms for the user to enter these parameters via a software graphical user interface or through a user editable text file. Changing a QC parameter does not alter the performance of the NDA equipment or affect any of the software algorithms used to derive FGE or waste characterization results. As such, parameter updates do not change the NDA software and are not considered a software change as covered by other sections of this procedure. The QC parameter updates are tracked as a best management practice for historical and disaster recovery purposes of the NDA equipment.

NOTE 2: *The NDA units affected by this section are listed below:*

- *Z-211-102*
- *Z-211-103*
- *Z-250-807*
- *Z-212-105*
- *Z-390-100*
- *Z-390-101*
- *Z-440-875*
- *Super-Henc-0610*
- *WAGS-0610*
- *SGR-0610.*

3.8.1 SPU Initiator: Initiate a new SPU as follows:

3.8.1.1 Input basic information and problem description as required by Test Track Pro software in the software parameter update database.

3.8.1.2 Assign the SPU to the CSE for evaluation.

3.8.2 CSE: If the update is for Class-1 system, complete and attach Form-1342.

3.8.3 Ensure that the proposed SPU is documented correctly and provide approval of the SPU.

3.8.4 Nuclear Facility Manager or Designee: For Class-1 systems, review Form-1342 and provide approval for the SPU.

3.8.5 System Manager or Designee: Ensure that the software class (Class I or Class II) assigned to the SPU is appropriate based on which systems and/or software will be affected, and provide approval for the SPU.

3.8.6 Software Developer or Software Engineer: Attach the QC parameter updates and applicable forms developed in accordance with approved procedures.

3.8.7 Quality Assurance: Ensure that the parameter update complies with established procedures and provide approval for the SPU.

3.8.8 Software Engineer: Load the approved QC parameter update to plant.

3.8.9 Perform applicable online testing and attach objective evidence for the update to the SPU.

3.8.9.1 If online testing passes, mark the SPU as Pass.

3.8.9.2 If online testing fails, return QC parameters to as-found condition and mark the SPU as Fail.

3.8.9.2.1 Return to Step 3.8.6.

3.8.10 Software Admin Reviewer/Software Administrator or Designee: Once installation is complete, perform the following:

3.8.10.1 Ensure that any supporting documentation has been attached to the SPU.

3.8.10.2 Close the SPU.

3.9 Software Procurement

3.9.1 Software Engineer: Ensure an SCR is initiated and approved for work in accordance with Section 3.2.

3.9.2 Software Engineer: Prepare a Form-1172.

3.9.3 Software Engineer: Procure software per MP-PCMT-15.1, Acquisition of Material and Services.

3.9.3.1 Specify all applicable quality assurance requirements for contracted software development and software services.

3.9.3.2 Identify all documentation, plans, and procedures to be supplied by the vendor.

3.9.4 Software Engineer: Apply quality assurance requirements using the graded approach and the applicable Form-1172.

3.9.4.1 Include provisions for the supplier to report software errors and failures.

3.9.5 Software Engineer: Evaluate the software documentation to determine whether the software was developed and approved in a manner equivalent to the requirements imposed by this procedure.

3.9.5.1 If the documentation associated with newly developed software is determined to be inadequate, then follow procurement procedures for the further evaluation of submitted documents.

3.9.5.2 If the documentation associated with previously developed software is determined to be inadequate, then further evaluate the adequacy of the software in accordance with Section 3.10.

3.9.6 Software Engineer: Upon software acceptance, place procured software and vendor-supplied documentation under configuration control in accordance with Section 3.6.

3.9.7 Quality Assurance: For Class I and Class II software, review applicable software verification and validation documents.

3.9.8 Software Engineer: Ensure that software testing is performed in accordance with Section 3.4.

3.9.9 Software Engineer: Install software in accordance with Section 3.5.

3.9.10 Software Engineer: Perform UAT to verify the functional capability of the software and the acceptability of the supplier's supporting documentation.

3.9.11 System Manager or Designee: Release procured software for use.

3.10 Evaluation of Software Developed Under Other QA Programs

NOTE 1: *Software developed under QA programs not consistent with the requirements of this procedure shall be evaluated in accordance with this section to determine its adequacy to perform its intended function.*

(DOE-CBFO-94-1012)

NOTE 2: *This procedure is limited to the evaluation and qualification of existing, legacy or commercial-off-the-shelf software that is used to support database development and maintenance and does not include the evaluation and qualification of assay data transferred to the system from measurement systems.*

3.10.1 Software Engineer: Evaluate the *primitive baseline* (see def.) documentation to determine the adequacy of the existing software requirements, design, test and user documentation to support operation and maintenance.

3.10.2 Software Engineer: Document the adequacy of the user requirements, and the design, test, and user documentation, by completing the Form-1173, Software Evaluation Report.

3.10.3 System Manager or Designee: Approve the Software Evaluation Report and forward to QA.

3.10.4 Quality Assurance: Review Software Evaluation Report to ensure that existing documentation supports specifications and requirements, implemented design, and test results validating the requirement.

3.10.5 Software Engineer: If further testing is needed to confirm *software validation* (see def.), ensure test requirements are identified on Form-1173.

3.10.6 Software Engineer: Ensure the software is placed under configuration control in accordance with Section 3.6, prior to use.

3.11 Software Retirement

NOTE: *Any software that is no longer proactively required meets the criteria for retirement and will be identified to the system manager/or designee for approval to be retired. The retirement will be managed by the SCR process.*

3.11.1 System Manager or Designee: Develop criteria to determine when software can be retired from use and the methods to prevent the use of software that is no longer controlled.

3.11.2 Software Engineer: Document the retirement of a superseded software version as an SCR and submit it per Section 3.2.

3.11.3 Software Engineer: After receiving approval of the SCR, remove retired software from production, archive the software version, and terminate support.

3.12 Development of Supporting Documentation

NOTE 1: *WTS-related supporting documentation (i.e., URS, SDD and test cases) are stored in PVCS under WTS R4-WTS docs – Current. The files are stored sequentially with the nomenclature of WTS-Xxx-YYY – document title; where XXX=the document type, and YYY=the number identifier (e.g., WTS-SDD-043 – Treatment Facility Unpack).*

NOTE 2: *WTS-related supporting documentation number identifiers are assigned using the document number generator found on the AMWTP homepage.*

3.12.1 User Requirements Specifications

3.12.1.1 When performing review of supporting documentation, document any review comments on Form-1003, Review Comment and Resolutions Form.

3.12.1.2 System Engineer/User/Initiator: Develop URS in conjunction with a Software Engineer.

3.12.1.2.1 Software Engineer/User/Initiator: Develop a URS using Form-1732.

3.12.1.2.2 Software Engineer: Work with URS Initiator to develop and review the URS to ensure it accurately defines requirements.

NOTE: *Users may be represented from multiple functional organizations.*

3.12.1.3 User or SME: Approve the URS.

3.12.1.4 Quality Assurance: For Class I and Class II software, review and approve the URS.

3.12.1.5 System Manager or Designee: Review and approve the URS.

3.12.1.5.1 When complete, attach the URS with any accompanying documentation leading to completion to the SCR and release for use.

3.12.2 Software Design Descriptions

NOTE: *A traceability matrix is created in conjunction with the SDD, and may be included as an appendix, and updated to include the design implementation identifier for each identified requirement. The SDD and traceability matrix are submitted jointly for approval.*

3.12.2.1 Software Engineer: Prepare a SDD using Form-1731.

3.12.2.2 System Manager or Designee: Assign independent technical reviewer(s), and ensure that a software design review is performed, the results documented, and the design approved.

3.12.2.3 Independent Technical Reviewer: Perform technical review, and evaluate the technical adequacy of the design approach.

3.12.2.4 Independent Technical Reviewer: Determine internal completeness, consistency, clarity and correctness of the software design, code verification, and traceability to software requirements specified in the SCR, URS, and/or design document.

3.12.2.5 Software Engineer: Resolve any review comments, and document the resolution of comments.

3.12.2.6 Quality Assurance: For Class I and Class II software, review and approve the SDD.

3.12.2.7 System Manager or Designee: Review and approve the SDD.

3.12.2.7.1 When complete, attach the SDD to the SCR and release for use.

3.12.3 Test Cases

NOTE 1: *Test cases may be developed by the initiator of the change, a SME, or a software test engineer, but the test case preparer must be independent of the software development.*

NOTE 2: *A test amendment may be prepared in lieu of a revised test case if the test objectives and evaluation methods remain the same as stated in the original test case.*

3.12.3.1 Test Case Preparer: Prepare test case(s) based on established software requirements.

NOTE: *Test steps are included for both positive and negative outcomes.*

3.12.3.1.1 Indicate in each test step the action to be taken, and the expected result that will indicate success.

3.12.3.2 Software Test Engineer: Work with the test case preparer to develop and review the test case to ensure it accurately defines testing requirements.

3.12.3.3 System Manager or Designee: Assign independent, qualified individual to perform review of test case(s).

3.12.3.4 Independent Technical Reviewer: Review test case(s) for completeness, consistency, clarity and correctness.

3.12.3.4.1 When reviewing test case(s), verify that:

- The inputs are clearly identified.
- The instructions are clear and sufficient to accomplish the purpose of the tests.
- The acceptance criteria are reasonable, sufficient and adequately described to accomplish the purpose of the tests.

3.12.3.5 Test Case Preparer: Resolve any review comments, document resolution of comments, and sign and date the cover page of the test case.

3.12.3.6 Independent Technical Reviewer: Sign and date the cover page of the test case when comments are resolved.

3.12.3.7 Quality Assurance: For Class I and Class II software, review the test case and sign and date the cover page to indicate approval.

3.12.3.8 System Manager or Designee: Review the test case and sign and date the cover page to indicate approval.

3.12.3.8.1 When complete, attach the test case to the SCR and release it for use.

3.12.4 Test Reports

NOTE: *Where Test Reports are not required, the Software Engineer documents the testing, and outcome of the testing, directly on the SCR.*

3.12.4.1 Software Test Engineer: Prepare test report in accordance with applicable SCR and/or test case requirements.

3.12.4.1.1 Ensure the test report contains the following information:

- Sufficient documentation to demonstrate that the reported results adequately addresses the specified test acceptance criteria

- Reference to the applicable SCR and/or test case(s) and any changes in evaluation methods, inputs, or test sequence
- Finalized traceability matrix
- Hardware used and its configuration at the time of the test
- Conclusions and recommendations concerning acceptance and utilization of the software.

3.12.4.2 System Manager or Designee: Assign independent, qualified individual to perform review of test report(s).

3.12.4.3 Independent Technical Reviewer: Review test report for completeness, consistency, clarity and correctness.

3.12.4.3.1 When reviewing test report(s), verify that:

- The report defines the applicable test criteria.
- The reported results are adequately supported by test output.
- The reported results adequately address the specified acceptance criteria.
- Any test failures have been adequately resolved, retested and documented.

3.12.4.4 Software Test Engineer: Resolve any review comments, document resolution of comments, and sign and date the cover page of the test report.

3.12.4.5 Independent Technical Reviewer: Sign and date the cover page of the Test Report when comments are resolved.

3.12.4.6 Quality Assurance: For Class I and Class II software, review the test report and sign and date the cover page to indicate approval.

3.12.4.7 System Manager or Designee: Review the test report and sign and date the cover page to indicate approval.

3.12.4.7.1 When complete, attach the test report to the SCR and release it for use.

3.12.5 Software User Documentation

3.12.5.1 Software Engineer: Develop software user documentation such that any qualified user (i.e., anyone having adequate technical background) could install and run the software, as well as properly respond to errors.

3.12.5.1.1 Ensure user documentation includes the following:

- Software name and version identifier
- Description of the user's interaction with the software
- An explanation of the mathematical models and derivation of the numerical methods used in the software design (physical and mathematical assumptions on which the software is based shall be included, along with an explanation of the capabilities and limitations inherent in the software)
- Description of any required training necessary to use the software
- Input and output specifications
- Input and output formats
- Description of software and hardware limitation
- Description of user messages initiated as a result of improper input and how the user can respond
- Information for obtaining user and maintenance support.

3.12.5.2 System Manager or Designee: Review and approve the software user documentation.

3.12.5.2.1 When complete, release the software user documentation to system users prior to implementation and archiving of the software change.

3.13 Abnormal and Infrequent

3.13.1 Emergency Changes

NOTE 1: *Changes that will affect WIPP data quality objectives must be approved by the CBFO before implementation.*

NOTE 2: *The USQ review must still be applied to changes processed under the production emergency provisions.*

NOTE 3: *If USQ evaluation reveals that a USQ exists (i.e., positive USQ determination), then DOE must approve an amendment to the safety basis in accordance with MP-NSPC-3.2, or the change must be revised such that a USQ does not exist, prior to implementing this change.*

NOTE 4: *In emergency software change situations, with the approval of the System manager or designee, a change to the system may be made. Class I and II systems will also require approval from the QA manager or designee. Emergency software change situation that occurs during a backshift or weekend emergency may be approved for work via telecom or email. Software code may be retrieved from the* Version Control System *(see def.) by the System manager or software engineer but may not be checked into the baseline code until completion of the SCR process. Software changes shall be tested by an independent software test engineer.*

3.13.1.1 Ensure the following criteria are addressed to determine if conditions meet the designation as an “emergency change”:

- Change is needed to support safe restoration of operations
- Change is needed to support restoration of WIPP data quality
- Mission critical items upon which reliance is needed to restore operational conditions to meet nuclear or technical safety operations.

3.13.2 Temporary Changes

NOTE 1: *Temporary changes, as discussed below, apply to Class I and Class II systems only. Temporary changes to Class III systems are referred to as "Temporary Software Overrides" and are performed in accordance with INST-CD&M-11.2.6, Temporary Software Override.*

NOTE 2: *Temporary changes may be used to support plant operations when temporary solutions are required due to failed equipment. Temporary changes are defined as changes planned to be in place for less than 30 calendar days.*

3.13.2.1 Review extensions every 30 calendar days and ensure they do not exceed 120 calendar days. Temporary changes are presented and tracked the same as a permanent change.

3.13.2.1.1 System Manager or Designee and Quality Assurance Manager or Designee: Approve changes requiring an extension.

4.0 DEFINITIONS

Baseline. A product (computer program, documentation or both) that has been formally reviewed and approved for use. The product thereafter serves as the basis for further development and can be changed only through formal change control procedures.

Baseline inventory and software classification list. A listing, developed per INST-CD&M-11.2.2, that lists software by the Class I, Class II, or Class III level and its user organizations.

Case file. A packet that contains information about each revision to a document with the information increasing as the document moves through the development process.

Change tracking system. An electronic commercial application (Test Track Pro) used by the Information Technology development and maintenance groups to track and manage the SCR process.

Class I software. Software equipment identified by the Documented Safety Analysis (DSA) as Safety Class or Safety significant SSC. Class-I SSCs are those items whose failure present the highest potential safety consequence and project risk. Class-I SSCs are identified as Q-Listed SSCs, during construction/commissioning.

Class II software. Software equipment designated by the DSA as Other Items Important to Safety, by Statutory requirements, or functions to collect, reduce, manipulate or store data used in the characterization, certification, or transportation of waste by TRU programs, by WIPP requirements or certain Safety Equipment required by Permit, or where a failure could directly cause injury to personnel through a conventional or radiological means.

Class III software. All other process software equipment not considered Class-I or Class-II.

Configuration management. The process of 1) identifying and defining the baselines associated with a software product or application; 2) controlling the changes to baselines and release of baselines throughout the lifecycle; 3) recording and reporting the status of baselines and the proposed and actual changes to the baselines; and 4) verifying the correctness and completeness of a product baseline.

Error. A difference between an observed or measured value or condition and the true, specified or theoretically correct value or condition; also, an incorrect step, process or data definition, or incorrect result.

Facility modification. Any permanent change or addition to structures, systems, components (SSCs), software or operational processes that are part of the plant's current technical baseline or design basis. This includes any changes that may affect industrial safety, radiological controls or changes to equipment configuration that may not be covered by the technical baseline.

Facility modification proposal. A document, produced in accordance with INST-CD&M-11.1.2, used to screen changes, (including design changes) solicit inputs, identify impacts, and obtain approval for change implementation.

Impact analysis. An independent analysis performed on all software changes that is used to identify any unintended effects. The analysis will also evaluate whether a change has the potential to affect previously completed software or criticality controls. This analysis will be performed by an individual independent of the software development, but with sufficient knowledge to perform the change themselves.

Primitive baseline. A baseline that consists of the source code, if available, executable code, data libraries, command and input files, and existing requirements, design, test and user documentation.

Polytron Version Control System. The trademark name of the software package used for controlling versions of software applications at the AMWTP.

Process control equipment. The equipment used specifically for AMWTP throughput.

Prototype. A development version of a software module to allow users of the software to evaluate developers' proposals for the design of the eventual product by actually trying them out, rather than having to interpret and evaluate the design based on descriptions.

Regression testing. Selective retesting of a system or component to verify that modifications have not caused unintended effects and that the system or component still complies with its specified requirements.

Release. A configuration management action allowing a particular version of software to be available for test or operation.

Secure code. Software code identified as impacting criticality controls.

Software. Computer programs, procedures, rules, and associated requirements, design, test and user documentation pertaining to the operation of a computer system.

Software change screening. A document used to evaluate software changes and determine if the change needs to be further evaluated as an FMP.

Software life cycle. The period of time that starts when a software product is conceived and ends when the software product is no longer available for use.

Software package. The baseline information contained on a system change request may also include; user requirement specification, software design description, software test case, test reports, and design document.

Software validation. The test and evaluation of completed software to ensure compliance with software requirements.

System change group. The group responsible for evaluating new SCRs to ensure they are properly classified and prioritized, and that the changes proposed within them will not have an adverse effect on safe, compliant operations. For changes to Class I or Class II software, this group is comprised of, at a minimum, the System manager (or designee), the Nuclear Facility Manager (or designee), the cognizant system engineer and representatives from Quality Assurance, TRU Programs, and Operations. For Class III software this group consists of the system manager (or designee) and the Nuclear Facility Manager (or designee). The system change group will interact through the *change tracking system* (see def.), as well as meetings, on an as-needed basis.

System change request. An electronic form used to track and manage software changes. See change tracking system.

System change request field group. The group responsible for performing the initial review of an SCR that ensures adequate information is provided and to determine the appropriate level of supporting documentation. This group may include system administrators, network administrators, software engineers, and/or system managers. The SCR field group will interact through the change tracking system, as well as meetings, on an as-needed basis.

System data change request. The mechanism used to track changes to existing characterization data or a change to baseline software code tables.

Traceability matrix. A documented matrix used in the software development cycle that identifies the approved requirements baseline, the design implementation identifier, the test case used to validate the design implementation, and the results of validation.

Unreviewed safety question. A situation where (1) The probability of the occurrence or the consequences of an accident or the malfunction of equipment important to safety previously evaluated in the documented safety analysis could be increased; (2) The possibility of an accident or malfunction of a different type than any evaluated previously in the documented safety analysis could be created; (3) A margin of safety could be reduced; or (4) The documented safety analysis may not be bounding or may be otherwise inadequate.

User acceptance testing. Testing performed for the purpose of obtaining user concurrence that a change has been implemented correctly and that the user requirements have been met.

Version control system. A commercial off-the-shelf client-server application, which provides a platform for the configuration management of software.

5.0 REFERENCES

(1) 221-0003, MSD ChemStation Software Installation Manual

(2) 221-0002, HGAS III Operation and Maintenance Manual

(3) DOE-CBFO-94-1012, Quality Assurance Program Document (QAPD)

(4) INST-CD&M-11.1.2, Facility Modification Proposal Preparation

(5) INST-CD&M-11.2.1, Software Version Control

(6) INST-CD&M-11.2.2, Software Inventory Classification

(7) INST-CD&M-11.2.3, System Data Change Request

(8) INST-CD&M-11.2.5, Integrated Control System Software Modifications

(9) INST-CD&M-11.2.6, Temporary Software Override

(10) MP-CMNT-10.5, Measuring and Test Equipment Program

(11) MP-DOCS-18.2, Records Management

(12) MP-DOCS-18.4, Document Control

(13) MP-NSPC-3.2, Unreviewed Safety Question Process

(14) MP-PCMT-15.1, Acquisition of Material and Services

(15) OPSTG-0001, Testing Guidelines for Advanced Mixed Waste Treatment Project

6.0 RECORDS

Records generated by this procedure are classified in accordance with the table below and dispositioned in accordance with MP-DOCS-18.2, Records Management.

Record Description	Classification
MP-CD&M-11.2, *Case File* (see def.)	Non-Permanent WIPP/ENV1-J-1/ Destroy 10 years after submittal
The following items will be electronically stored as a Quality Assurance record in the TestTrackPro database and will include objective evidence of disposition, implementation and verification of software changes which may consist of one or more of the following: • Completed Form-1003, Review Comment and Resolution Form • Completed Form-1172, Software Quality Plan • Completed Form-1173, Software Evaluation Report • Form-1342, Authorization to Work on a Safety Significant (Class-1) SSC • Completed Form-1685, Software Change Screening • Completed Form-1731, Software Design Description • Completed Form-1732, User Requirements Specification • Completed Software Test Case • Completed Test Report • Form-1743, Data Backup Request • Form-1941 Software Change Impact Analysis	Non-Permanent WIPP/ENV1-J-1/Destroy 10 years after submittal

Record Description	Classification
QCSWTST, Test Engineer Record of Certification	(Both)Facility Operating Record/Nonpermanent WIPP/ENV2-a-1-a/Submit to RMC for long-term storage. Destroy 5 years after life of facility.

7.0 EXHIBITS

None

8.0 APPENDICES

Appendix A – System Change Request Flow Path

Appendix A -
System Change Request Flow Path

The following is an example of the flow path for an SCR generated for maintenance changes to an existing system. Specific steps may vary depending upon the complexity of the change, as specified within the body of this procedure.

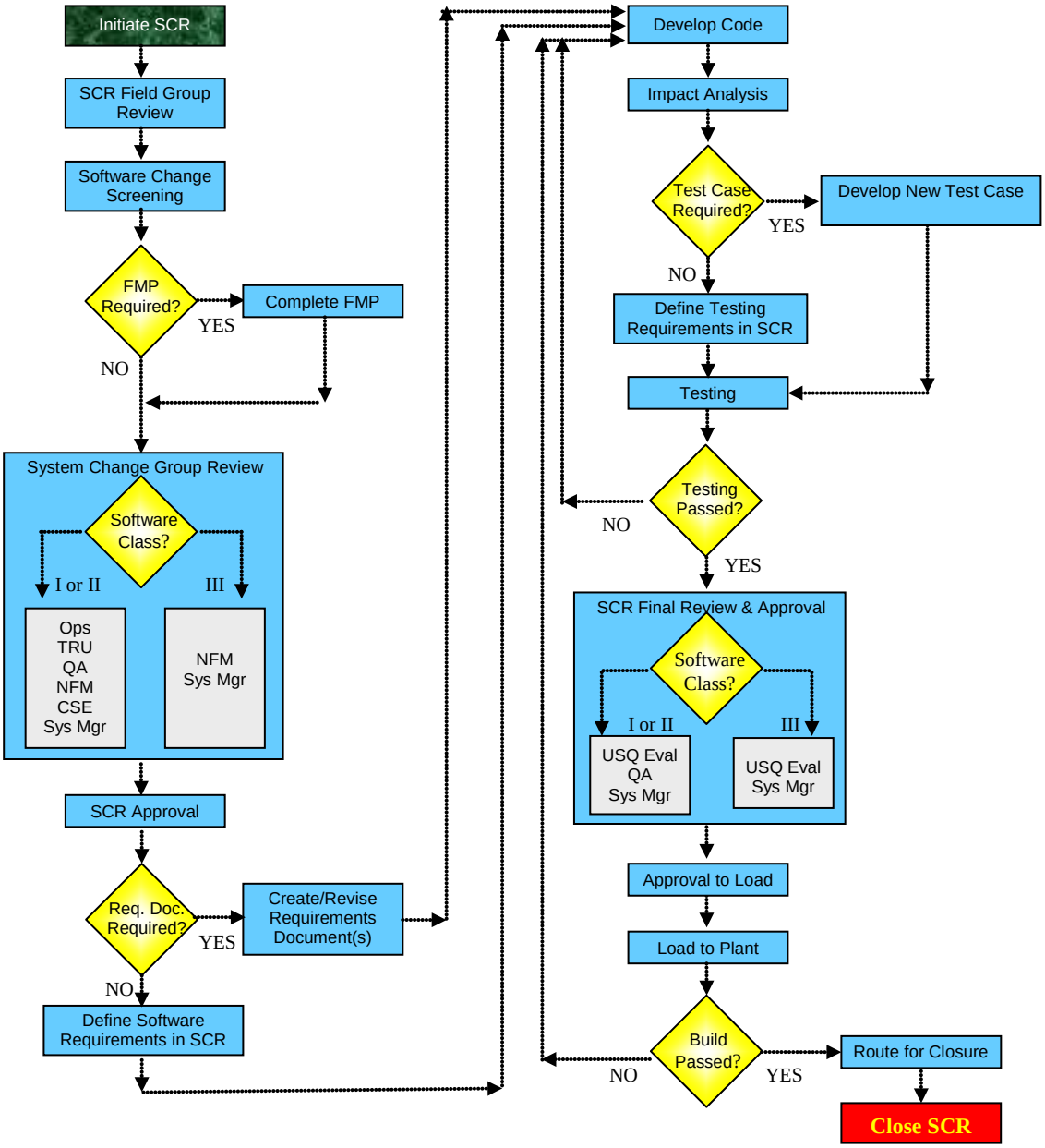

Measuring and Test Equipment Program

Advanced Mixed Waste Treatment Project

Approved:

(*Signature on file. See DCR-11646.*) 09/29/12

Rob Hamilton
Maintenance Manager

Date

REVISION LOG

Revision Number	Date Approved	Pages Affected	Description of Revision
0	06/25/2002	All	Initial issue: DCR-2001-1069
1	09/12/2002		Re-issue, See DCR-2002-1442
2	9/16/2002	5, 6	Re-issue, see DCR-2002-1472
3	11/04/2002	All	Re-issue, see DCR-2002-1551
3.1	12/16/02	All	Minor change to the list of references. See DCR-2002-1835
3.2	1/15/03	All	Minor change, see DCR-2003-1914
4	3/03/03	All	Address lost M&TE, see DCR-2003-2078
5	5/12/03	All	Minor change to clarify what M&TE information may be in MMS, see DCR-2003-2252.
6	11/16/05	All	Address surveillance (QAS-05-07) comments, see DCR-2005-4128.
7	2/14/06	All	Editorial changes to conform with changes to INST-CMNT-10.5.1, see DCR-4797.
8	03/19/08	All	DCR-6469. Entire document revised. Changed to incorporate all requirements of DOE-433.1-1 and align with instructions.
9	09/13/10	Various	DCR-9340. Made various changes for clarity and consistency.
10	09/29/12	All	DCR-11646. Applied ITG-BLUESHEET-203.

TABLE OF CONTENTS

1.0 PURPOSE/SCOPE 1

2.0 ROLES AND RESPONSIBILITIES 1

3.0 PROCEDURE 2

3.1 Identification of Measuring and Test Equipment 2

3.2 Records 4

3.3 Calibration 4

3.3.1 Equipment for Troubleshooting Use Only 4
3.3.2 Calibration Standards 4
3.3.3 Calibration Procedures/Calibrating Measuring and Test Equipment On-Site 6
3.3.4 Calibrating Measuring and Test Equipment Off-Site 7
3.3.5 Calibration Frequency 7
3.3.6 Measuring and Test Equipment Calibration Schedule 8
3.3.7 Measuring and Test Equipment Repairs/Out of Calibration 8
3.3.8 Functional Checks 9

3.4 Control 9

3.4.1 Accountability and Traceability 9
3.4.2 Packaging 9
3.4.3 Storage 10
3.4.4 Marking Restricted Use Measuring and Test Equipment 11
3.4.5 Accountability and Traceability Records 11
3.4.6 Minimizing Contamination of Measuring and Test Equipment 12

3.5 Evaluation 12

3.5.1 Evaluations of Use of Out-of-Tolerance or Defective Measuring and Test Equipment 12
3.5.2 Periodic Reviews of M&TE Program 13

4.0 DEFINITIONS 13

5.0 REFERENCES 14

6.0 RECORDS 15

7.0 EXHIBITS 15

8.0 APPENDICES 15

1.0 PURPOSE/SCOPE

Operators depend upon installed facility instrumentation for accurate indications, process control actions, and trip functions to operate the facility safely and reliably. The accuracy of the installed instrumentation is established and maintained through the *measuring and test equipment* (M&TE; see def.) control and *calibration* (see def.) program. This procedure for control and calibration of measuring and test equipment ensures the accurate performance of Advanced Mixed Waste Treatment Project (AMWTP) instrumentation and equipment for testing, calibration, and repairs. The control and calibration requirements for M&TE also apply to subcontractor groups that are engaged in maintenance activities.

2.0 ROLES AND RESPONSIBILITIES

Performer	Responsibilities
Maintenance Manager	• Directs all aspects of the Measuring and Test Equipment Program • Authorizes storage areas for M&TE.
Responsible Manager	• Directs the equipment/process on which M&TE has been used • Assesses the implications of measurements made with faulty/out-of-tolerance M&TE.
System Engineer/Subject Matter Expert (SME)	• Assists the responsible manager, as necessary, when assessing the implications of measurements made with faulty/out-of-service M&TE.
M&TE Custodian (MTEC)	• Reviews calibration data ensuring appropriate calibration stickers are attached • Removes M&TE from service prior to the expiration of calibration • Informs the maintenance manager when M&TE is found, or suspected, to be out of tolerance, defective, or otherwise unreliable • Maintains security of M&TE storage area • Initiates a TrackWise action item designating the responsible manager to assess the implications of measurements made with faulty/out-of-tolerance M&TE.

3.0 PROCEDURE

3.1 Identification of Measuring and Test Equipment

3.1.1 Each piece of M&TE shall be assigned a unique identification number that is permanently marked on or attached to it, which will assist in identifying, tracing, and positively controlling M&TE.

3.1.1.1 All equipment not designated for in-house calibration shall be registered with the *approved calibration facility* (ACF; see def.).

3.1.1.2 The ACF shall retain a register of M&TE and records of all calibrations and shall issue a calibration certificate or report to the AMWTP.

NOTE 1: *The* Computerized Maintenance Management System *(CMMS; see def.) contains a database of all M&TE.*

NOTE 2: *The M&TE list includes the following:*

- *Generic description, trade, or marketing name*
- *Manufacturer, model, and serial number*
- *Unique identification number*
- *Calibration frequency*
- *Calibration date*
- *Calibration due date.*

3.1.2 The CMMS database shall be regularly updated and is the master M&TE list.

3.1.2.1 A calibration sticker shall be attached to each M&TE device and indicate:

- Equipment ID number
- Name, initial, or badge number of the individual attaching the sticker
- Calibration date
- Calibration due date.

3.1.2.2 The calibration sticker shall be removed and replaced with a new sticker each time the equipment is calibrated.

3.1.3 A *restricted use sticker* (see def.) shall be placed on any equipment requiring special restrictions or precautions in its use.

3.1.3.1 This sticker shall include the following:

- Device identification number
- A statement of the restrictions that apply
- Name, initial, or badge number of the individual attaching the sticker
- Date the sticker is attached
- Expiration date, if applicable.

3.1.3.2 This sticker may be in addition to or part of a calibration sticker.

3.1.4 A rejected sticker shall be placed on any equipment that fails to meet acceptance criteria or is suspected of being defective.

3.1.4.1 This sticker shall include the following:

- Device identification number
- Reason for rejection
- Name, initial, or badge number of the individual attaching the sticker.

3.2 Records

3.2.1 A maintenance history file shall be kept in CMMS for all M&TE.

NOTE: *The maintenance history file includes*

- *Manufacturer's data (including model serial numbers)*
- *Equipment identification number*
- *Calibration frequency and tolerance*
- *History of calibration, repairs, and other appropriate data*
- *Calibration nonconformance evaluations documented on Form-1613, M&TE Evaluation*
- *Usage records (Form-1625, M&TE Usage Report, and Form-1848, M&TE Checkout Log).*

3.2.2 Records for lost, destroyed, unavailable, or removed-from-use M&TE shall be maintained in the history file.

3.3 Calibration

3.3.1 Equipment for Troubleshooting Use Only

3.3.1.1 All M&TE at the AMWTP is calibrated.

3.3.1.1.1 Equipment that is used only for troubleshooting does not need to be controlled as M&TE and does not need to be calibrated.

3.3.2 Calibration Standards

3.3.2.1 Only *calibration standards* (see def.) traceable to National Institute of Standards and Technology (NIST) or other nationally recognized standards organizations shall be used for calibration of M&TE.

3.3.2.2 The M&TE shall be calibrated using reference standards (secondary or working) whose calibration has a known valid relationship to nationally recognized standards or accepted values of natural physical constants.

3.3.2.2.1 If national standards do not exist, the basis for calibration shall be documented.

3.3.2.2.2 The reference standard used shall have accuracy at least four times greater than the device under test.

3.3.2.2.3 If the accuracy ratio cannot be met, analysis of the errors shall be estimated to provide a valid uncertainty of the calibration process.

3.3.2.3 If repair or calibration of a standard is necessary, the recalibration must be traceable to NIST or to the standard of record for the M&TE.

3.3.2.4 Calibration standards maintained at the facility shall be kept in designated storage locations.

3.3.2.5 If calibration standards are issued for field use, the maintenance manager or MTEC shall authorize and minimize the period of issuance.

3.3.2.5.1 Issuance of laboratory standards for field use is discouraged.

3.3.2.6 Standards shall be calibrated on a frequency consistent with vendor recommendations and facility experience.

3.3.2.7 Calibration records for standards shall be consistent with those of all other M&TE.

3.3.3 Calibration Procedures/Calibrating Measuring and Test Equipment On-Site

NOTE: *The M&TE may be calibrated on-site.*

3.3.3.1 Calibration of equipment will be performed by qualified technicians using approved procedures. These procedures will contain the following:

- Precautions or limitations
- Calibration standards to be used and their accuracy
- Data sheets for as-found and as-left data
- Acceptance criteria for each scale, expressed as a range and in the units that are being measured (e.g., represent 9.75 volts as 9.726 – 9.774 volts rather than as 9.75 volts ± 0.25 percent). (Acceptance criteria will be rounded up on the "–" side and down on the "+" side to be within the range of accuracy of the instrument being read.)
- Identity of the equipment to be calibrated
- Step-by-step instructions regarding sequence, methods, data sheet completion details, etc. (including as-found and as left conditions)
- Special instructions, such as environmental conditions, when appropriate.

3.3.3.2 The M&TE calibration data sheets shall include provisions for recording as-found data before any adjustments or repairs are made.

3.3.3.3 Completed data sheets shall be reviewed before release of the equipment to service to verify that acceptance criteria are satisfied.

3.3.3.4 When M&TE is found to be out of calibration, an M&TE evaluation shall be performed in accordance with Section 3.5.

3.3.3.5 Completed data sheets shall be filed with the maintenance history.

3.3.4 Calibrating Measuring and Test Equipment Off-Site

NOTE: *The M&TE may be calibrated by an ACF.*

3.3.4.1 When generating purchase orders or calibration requests to these organizations, the following shall be considered:

- Tolerance requirements
- Calibration test data requirements
- Any special environmental, handling, and shipping requirements
- Calibration data to be supplied with the calibrated equipment
- Point-of-contact information to off-site organization to allow notification of out of tolerance M&TE
- Requirement to provide immediate notification if the as-found data for an M&TE device does not meet specified acceptance criteria. (This notification is necessary to ensure that the evaluation required by Step 3.5 is initiated as soon as possible.)

3.3.4.2 Upon return of the M&TE, the MTEC will ensure that the calibration data submitted is reviewed and an appropriate calibration sticker is attached.

3.3.5 Calibration Frequency

3.3.5.1 Frequency of calibration shall be determined based on the manufacturers' recommendations, M&TE usage, and M&TE historical reliability.

3.3.5.2 Consideration shall be given to the amount and type of M&TE available for use compared to that needed to support periods of peak activity such as outages.

3.3.6 Measuring and Test Equipment Calibration Schedule

3.3.6.1 Calibration dates for similar M&TE should be staggered to ensure availability for day-to-day and peak needs.

3.3.7 Measuring and Test Equipment Repairs/Out of Calibration

3.3.7.1 Measuring and test equipment found to exceed required calibration tolerance or that has been subjected to possible damage shall be identified as rejected.

3.3.7.1.1 When repairs are required to M&TE, they shall be recalibrated to the original requirements before being returned to normal service.

3.3.7.1.2 When calibration/certification is performed, the as-found condition and/or minor adjustments to the M&TE shall be noted as part of the equipment history information.

3.3.7.2 When M&TE is suspected or actually found to be inoperable, unreliable, defective, or out of calibration, it shall immediately be taken out of service.

3.3.7.3 If the M&TE is found to be out of calibration, then all data recorded since the previous calibration by affected equipment shall be identified through usage records and a prompt evaluation shall be performed to determine the need for corrective action.

3.3.7.3.1 Lost M&TE and/or M&TE that has become contaminated and cannot be free-released and/or damaged M&TE will require an evaluation to determine if there was any indication to suspect that the integrity or calibration of the M&TE was compromised before the loss/contamination/damage.

3.3.7.4 The appropriate owner/operator of the affected equipment shall evaluate the validity of all applications and data derived since the previous calibration, determine their disposition, and establish the nature and timing of corrective actions, if necessary.

3.3.8 Functional Checks

NOTE: *The checks identified in Step 3.3.8.1 can be used, when applicable, to detect M&TE problems before and after an instrument is used in the field. They are not substitutes for* calibration checks *(see def.).*

3.3.8.1 If operational tests, functional checks, or battery checks of M&TE are performed, the desired response or acceptance criteria shall be clearly specified in instructions, user manuals, or indicated on the equipment.

3.4 Control

NOTE: *The control process used for M&TE is the CMMS. This program provides a recall program containing a total inventory listing. The CMMS automatically generates a work order prior to the calibration due date.*

3.4.1 Accountability and Traceability

3.4.1.1 The M&TE shall be traceable from the field application to working standards, secondary standards, primary standards, and NIST or other nationally recognized standards.

3.4.1.1.1 All calibration data shall have both forward and reverse traceability between the specific item and NIST.

3.4.2 Packaging

3.4.2.1 The M&TE integrity shall be maintained during handling and shipping.

3.4.2.1.1 The M&TE devices that are relatively easy to damage during transport and handling shall be provided more protection by being boxed or by being mounted in special rigs (e.g., test gauges mounted in portable frames).

3.4.2.2 Packaging for shipment to the standards laboratory shall not conceal or destroy existing conditions of equipment.

3.4.2.3 Packaging after calibration and certification shall be in a manner that does not jeopardize equipment.

3.4.3 Storage

3.4.3.1 The M&TE storage areas shall be authorized by the maintenance manager.

3.4.3.2 All equipment shall be stored in a manner that assures integrity is maintained and unintended contamination is minimized.

3.4.3.2.1 The M&TE storage areas shall provide sufficient separation of the ready-to-use equipment (calibrated and restricted use) from other equipment (rejected/expired) to preclude inadvertent use.

3.4.3.3 Storage areas shall be controlled to ensure that M&TE will not be adversely affected by environmental factors, such as, temperature, humidity, vibration, radio frequency interference, electromagnetic interference, and fumes.

3.4.3.4 Security of the M&TE storage area shall be maintained by the MTEC.

3.4.3.4.1 In the absence of the MTEC, the storage area shall be locked with access controlled by the responsible department manager and/or supervisor.

3.4.3.5 Instruments used on systems that contain oil, brackish water, etc., shall be cleaned thoroughly after each use.

3.4.3.6 Proper facilities are needed to help ensure equipment is protected from damage in storage, is properly maintained, and is readily retrievable.

3.4.4 Marking Restricted Use Measuring and Test Equipment

NOTE: *The following are examples of information that would be reflected on a restricted use sticker*:

- *Specific tasks the M&TE has been designated to be used for (e.g., torque Transuranic Package Transporter [TRUPACT], calibration checks)*
- *Limitations and restrictions to operate the M&TE based on the calibration information (e.g., specific range, direction of movement [clockwise only], temperature band)*
- *Internal radioactive contamination*
- *Limited use in specific areas/procedures*
- *Limited or restricted use such as oil, oxygen, saltwater, or demineralized water systems.*

3.4.4.1 The M&TE devices that have special uses, limitations, or restrictions shall be clearly labeled with a restricted use sticker.

3.4.5 Accountability and Traceability Records

3.4.5.1 Controlled M&TE storage areas shall be established to help ensure that only authorized persons are allowed access to M&TE.

NOTE 1: *Traceability of M&TE is accomplished by identifying the following:*

- *Measuring and test equipment user*
- *When the equipment was used*
- *What instrument or equipment it was used on and for what purpose (typically by referencing work order or procedure number)*
- *What ranges were used and/or what values were read.*

NOTE 2: *Traceability of M&TE supports a timely evaluation of instruments, systems, and other equipment associated with deficient M&TE.*

NOTE 3: *Maintenance history that can be readily sorted by specific M&TE used to perform maintenance (CMMS) also provides traceability.*

NOTE 4: *Computerized Maintenance Management System automatically generates a work order prior to the calibration due date.*

3.4.5.2 The MTEC shall contact the affected user to facilitate removal of M&TE from service.

3.4.6 Minimizing Contamination of Measuring and Test Equipment

3.4.6.1 Every effort shall be made to minimize contaminating calibrated M&TE.

3.4.6.1.1 Equipment subject to radioactive contamination shall be packaged/wrapped and used in a manner that minimizes the possibility of external and internal contamination.

3.4.6.1.2 Calibrated M&TE that becomes contaminated shall be removed from the calibration program or will be segregated from non-contaminated M&TE.

3.4.6.1.3 Segregated M&TE shall be stored in accordance with Section 3.4.3.

3.5 Evaluation

3.5.1 Evaluations of Use of Out-of-Tolerance or Defective Measuring and Test Equipment

3.5.1.1 When M&TE is found (or suspected) to be out of tolerance, defective, or otherwise unreliable, the MTEC shall inform the maintenance manager.

3.5.1.2 The MTEC shall generate a TrackWise action item designating the responsible manager.

3.5.1.3 The responsible manager shall evaluate the instruments and equipment that a particular device has measured or tested since the M&TE was last calibrated to determine whether recalibration or rework is needed.

3.5.1.4 The responsible manager may enlist the support of applicable SMEs and/or system engineers to aid in this determination.

3.5.1.5 A nonconformance report (NCR) may be generated as a result of the implementation of Form-1613 in accordance with MP-Q&SI-5.4, Identification of Nonconforming Conditions, and using INST-CMNT-10.5.1, Calibration and Control of Measuring and Test Equipment.

3.5.2 Periodic Reviews of M&TE Program

3.5.2.1 An annual review shall be performed to check for overall compliance with M&TE program requirements. The AMWTP Management Assessment Program will be the mechanism for the identification and tracking of the review activities.

3.5.2.1.1 During the review, reviewers shall check for the following:

- Proper implementation of the requirements of this document
- Proper use and storage of the M&TE.

4.0 DEFINITIONS

Approved calibration facility. A manufacturer, vendor, or AMWTP approved calibration lab that operates in accordance with the requirements of ANSI/NCSL-Z540-1, or other commensurate standard.

Calibration. The calibration check and adjustments when necessary to align an instrument in order to meet manufacturer's recommendations, statutory and/or regulatory requirements.

Calibration check. The testing in a documented measurement assurance process to verify the instrument is in calibration with a check standard that is periodically calibrated to NIST traceable standards. If the results are satisfactory, then no adjustments are required and the calibration check meets the requirements of a periodic calibration and an updated calibration sticker will be affixed to the instrument.

Calibration standard. A specific subset of M&TE that is used for performing calibrations of other M&TE.

Computerized Maintenance Management System. A commercial-off-the-shelf client-server application, which provides a platform for users to prioritize tasks, assign work based on the availability of necessary parts and labor, and analyze equipment failures to implement appropriate preventive/predictive maintenance measures.

Measuring and test equipment. All tools, gauges, instruments, devices or systems used to inspect, test, calibrate, measure, or troubleshoot to control or acquire data requirements. M&TE does not include permanently installed facility process or control instrumentation, radiation monitoring equipment, test equipment used for preliminary checks where data obtained will not be used to determine acceptability or verify conformance to established criteria, or rulers, tape measures, levels, and other such devices, if normal commercial equipment provides adequate accuracy.

Restricted use sticker. A sticker that identifies the specific tasks the M&TE has been designated to be used for (e.g., torque TRUPACT, calibration checks), limited use in specific areas/procedures, limitations, and restrictions to operate the M&TE based on the calibration information (e.g., specific range, direction of movement [clockwise only], temperature band), internal radioactive contamination, and/or restricted use (such as, oil, oxygen, saltwater, or demineralized water systems).

5.0 REFERENCES

(1) DOE O 4330.4B, Maintenance Management Program

(2) Form-1613, M&TE Evaluation

(3) Form-1625, M&TE Usage Report

(4) Form-1848, M&TE Checkout Log

(5) MP-DOCS-18.2, Records Management

(6) MP-Q&SI-5.4, Identification of Nonconforming Conditions

(7) INST-CMNT-10.5.1, Calibration and Control of Measuring and Test Equipment

6.0 RECORDS

Records generated by this procedure are classified in accordance with the table below, and dispositioned in accordance with MP-DOCS-18.2, Records Management.

Record Description	Classification
MP-CMNT-10.5, Case File	Nonpermanent WIPP/ENV1-J-1/Destroy 10 years after submittal.

7.0 EXHIBITS

None

8.0 APPENDICES

None

In-Plant and Process Instrumentation Testing Program

Advanced Mixed Waste Treatment Project

Approved:

(Signature on file. See DCR-11282.) 08/23/12

Rob Hamilton
Maintenance Manager

Date

REVISION LOG

Revision Number	Date Approved	Pages Affected	Description of Revision
0	09/12/2002	All	Initial issue: DCR-2001-1445
0.1	12/16/02	All	Minor change to the list of references, see DCR-2002-1835
1	6/9/03	All	Correct deficiencies identified during a self-assessment, see DCR-2003-2258
2	10/09/03	8	Add accuracy criteria. See DCR-2003-2431
3	5/13/04	All	Incorporate comments from a self-assessment, see DCR-2004-2957.
4	5/25/06	All	DCR-4299. Incorporated Blue Sheet and made minor editorial changes.
5	06/19/07	Various	DCR-5933. Advanced periodic review and minor editorial changes.
6	08/23/12	Various	DCR-11282. Incorporated ITG Bluesheet-203. Revised steps so that they are all written as actions, rather than a mixture of actions and requirements.

TABLE OF CONTENTS

1.0 PURPOSE/SCOPE 1

2.0 ROLES AND RESPONSIBILITIES 1

3.0 PROCEDURE 2

3.1 Training 2

3.2 Types of Tests 2

3.3 Determination of Testing Periodicity 3

3.4 Determination of Required Accuracy 4

3.5 Testing Evaluation 4

4.0 DEFINITIONS 4

5.0 REFERENCES 5

6.0 RECORDS 6

7.0 EXHIBITS 6

8.0 APPENDICES 6

AMWTP MANAGEMENT PROCEDURE		
MP-CMNT-10.14, Rev. 6	Issued: 08/28/12	Effective: 08/29/12

In-Plant and Process Instrumentation Testing Program

1.0 PURPOSE/SCOPE

The purpose of this procedure is to identify the testing program for *in-plant and process (IP&P) instrumentation* (see def.). The testing may be performed in-house by Advanced Mixed Waste Treatment Project (AMWTP) technicians or at an *approved calibration facility* (*ACF;* see def.). The *measurement and test equipment (M&TE;* see def.) used by AMWTP technicians will be calibrated in accordance with INST-CMNT-10.5.1, Calibration and Control of Measuring and Test Equipment, to known standards, which will provide the means of demonstrating to Department of Energy (DOE) and regulators that IP&P instrumentation will perform to the required accuracy.

2.0 ROLES AND RESPONSIBILITIES

Performer	Responsibilities
Maintenance Manager	• Oversees all aspects of the *calibration* (see def.) program • Assesses issues concerning IP&P instruments that are either past due for calibration or are determined to be out of calibration • Ensures instruments that fail a calibration, *calibration/functional check* (see def), will be evaluated for continued operation.
Quality Assurance (QA) Manager	• Concurs with instrument calibration issues.
Computerized Maintenance Management System (CMMS*;* see def.) Administrator	• Issues scheduled preventive maintenance from the CMMS to the responsible party • Updates the CMMS upon completion of the maintenance.
Maintenance Supervisor	• Implements this procedure • Informs the maintenance manager and plant shift manager (PSM) when an IP&P instrument fails testing or is out of calibration.
System Engineer	• Periodically evaluates the testing frequencies for the effectiveness in maintaining the accuracy of the IP&P instrumentation.

Performer	Responsibilities
Technicians	• Understands how to perform calibrations, calibration checks, and functional tests • Performs IP&P instrument testing in accordance with INST-CMNT-10.14.1, Testing In-Plant and Process Instrumentation • Informs the maintenance supervisor immediately if an instrument fails its calibration, calibration check, or functional check.

3.0 PROCEDURE

3.1 Training

3.1.1 Maintenance Manager: Ensure technicians are properly trained in the use of calibrated M&TE.

3.2 Types of Tests

3.2.1 Calibration Check

3.2.1.1 Technicians: Perform calibration check on IP&P instrumentation that perform critical functions and affect quality or is governed by statutory regulations.

NOTE: *Special calibrations of IP&P instruments can be performed by an ACF when determined necessary by the maintenance manager*.

3.2.1.2 Have IP&P instruments with unsatisfactory calibration check results calibrated.

3.2.2 Functional Checks

NOTE: *A calibration check may be performed when directed by the maintenance manager.*

3.2.2.1 Technicians: Perform functional checks on IP&P instruments that do not perform a critical function but are used as the primary indication of the process condition.

NOTE: *This functional check does not reset the clock for the normally schedule calibration check.*

3.2.2.2 If necessary, perform functional checks as a temporary calibration check for an IP&P instrument that is due for a calibration check, but because of problems with the M&TE that is normally used, the calibration check cannot be performed as scheduled.

3.2.2.2.1 Perform a complete calibration check as soon as the appropriate M&TE becomes available.

3.2.3 No Calibration Required

NOTE: *IP&P instruments that are used for information only and the indicated reading is not the primary indication for process conditions will not be required to be calibration checked or functionally checked.*

3.2.3.1 When these types of IP&P instruments (see note above) are repaired or replaced, perform a functional check initially to ensure proper operation.

3.3 Determination of Testing Periodicity

3.3.1 System Engineer: Base the periodicity at which IP&P instrumentation are tested on statutory requirements, Operations and Maintenance (O&M) manual recommendations, safety significance of the indication, the severity of the environment in which it is used, and/or engineering judgment.

3.3.2 Perform calibrations annually on IP&P instrumentation without adequate technical information that requires calibrations until evaluated by the system engineer.

3.4 Determination of Required Accuracy

3.4.1 System Engineer: Base the accuracy to which IP&P instrumentation is tested on statutory requirements, WIPP requirements, O&M manual recommendations, safety significance of the indication, the severity of the environment in which it is used, and/or engineering judgment.

3.4.1.1 If adequate technical information is not available for a calibrated IP&P instrument, ensure an accuracy of ± 2% of full scale at each calibration point.

3.5 Testing Evaluation

3.5.1 System Engineer: Periodically evaluate the testing frequencies for the effectiveness in maintaining the accuracy of the IP&P instrumentation.

3.5.2 Maintenance Manager: Review the system engineer's evaluation and adjust the testing frequencies accordingly.

3.5.3 When an instrument fails a calibration, calibration check, or functional check, evaluate the compensatory measure(s) needed to continue operations with the deficient instrument.

3.5.3.1 Record this evaluation on Form-1575, Evaluation of a Failed Calibration/Functional Check.

3.5.3.2 For Class I & II instruments, confer with QA manager and discuss the necessity of generating a nonconformance report, per MP-Q&SI-5.4, Identification of Nonconforming Conditions.

4.0 DEFINITIONS

Approved calibration facility. A calibration facility that operates in accordance with accepted industry consensus standards such as ANSI/NCSL-Z-540 or ISO 17025, and utilizes standards traceable to the National Institute of Standards and Technology (NIST).

Calibration. The testing and adjustments necessary to align an IP&P instrument in order for the indication to meet manufacturer's recommendations, statutory or regulatory requirement, operations limits or specifications, or meet requirements determined by engineering judgment.

Calibration check. A test to verify the IP&P instrument indication is in calibration with the M&TE, which has been calibrated to NIST traceable standards.

Functional check. A test using either another IP&P instrument or a portable measuring device (not required to be part of the AMWTP M&TE program), as the standard by which the instrument in question is checked. The IP&P instrument may remain connected to the parent system during the functional check.

In-plant and process instrumentation: Installed instrumentation and process equipment (gauges, differential pressure cells, meters, load cells etc.) used to provide a measurable indication, used with a specific degree of accuracy.

Computerized Maintenance Management System. A commercial-off-the-shelf client-server application, which provides a platform for users to prioritize tasks, assign work based on the availability of necessary parts and labor, and analyze equipment failures to implement appropriate preventive/predictive maintenance measures.

Measuring and test equipment. All devices or systems used to calibrate, certify, measure, gauge, troubleshoot, test, or inspect in order to control data or to acquire data to verify conformance to specified requirements. M&TE does not include IP&P instrumentation, radiation monitoring equipment, industrial hygiene monitoring equipment, test equipment used for preliminary checks where data obtained is not used to determine acceptability or verify conformance to established criteria, or rulers, tape measures, levels, and other such devices, if normal commercial equipment provides adequate accuracy.

5.0 REFERENCES

(1) HWMA/RCRA Storage Permit

(2) HWMA/RCRA TSA-IS Document

(3) INST-CMNT-10.5.1, Calibration and Control of Measurement Measuring and Test Equipment

(4) INST-CMNT-10.14.1, Testing In-Plant and Process Instrumentation

(5) LST-CMNT-01-IM, Conduct of Maintenance Requirements Implementation Matrix

(6) MP-DOCS-18.2, Records Management

(7) MP-Q&SI-5.4, Identification of Nonconforming Conditions.

6.0 RECORDS

Records generated by this procedure are classified in accordance with the table below and dispositioned in accordance with MP-DOCS-18.2, Records Management.

Record Description	Classification
MP-CMNT-10.14, Case File	Facility Operating Record/ENV2-a-1-a/Destroy 5 years after Life of Facility
Form-1575, Evaluation of a Failed Calibration/Functional Check	Facility Operating Record/ENV2-a-1-a/Destroy 5 years after Life of Facility

7.0 EXHIBITS

None

8.0 APPENDICES

None

Developing Written Work Instructions

Advanced Mixed Waste Treatment Project

Approval:

(*Signature on file. See DCR-12533.*) 06/25/13

Date

REVISION LOG

Revision Number	Date Approved	Pages Affected	Description of Revision
0	12/4/2001	All	DCR-2001-1066. Initial issue.
1	12/18/03	Pages 6, 7, 9, 10, & 13	DCR-1964, Changes to resolve comment resolution from WIPP review
2	6/23/2003	Pages 1 & 5	DCR-2292, Change to incorporate recommendations from CBFO resulting from the WIPP Program Evaluation to 1) indicate that this document rolls down implements requirements from the DOE CBFO QADP (CBRO-94-1012) as required by MP-DOCS-18.3 and 2) that work instructions are to be reviewed and approved in accordance with MP-DOCS-18.4
3	5/4/04	Pg 5/ Step 4.1.1	DCR-2933, To close AI-4483
4	10/18/2005	All	DCR-4610. Minor changes to apply Blue Sheet (DCR-4299) changes. Re-order sections for greater ease of use.
5	3/30/06	10	DCR 4920. Minor change to correct typographical error on numbering sequence for References and Records Sections.
6	09/14/2006	Page 1, 2, & 27	DCR-5326. Minor change to clarify what documents this procedure applies.
7	12/15/06	Section 1, Step 3.3.13, Throughout	DCR-5527. Clarified instructions for numbering pages to close AI 24077. Added instructions and definitions for General Use and Controlled Activity instructions. Make clarifications/format corrections throughout.
8	05/01/08	Entire	DCR-6992. Clarifications regarding use of P&Ls, Revision Log, Roles and Responsibilities, Notes, action words, and sign-offs as a result of FMEA recommendations per AI 36798 and needed changes identified during periodic review.

AMWTP MANAGEMENT PROCEDURE		
MP-DOCS-18.1, Rev. 14	Issued: 06/26/13	Effective: 06/27/13
Developing Written Work Instructions		

Revision Number	Date Approved	Pages Affected	Description of Revision
9	10/16/08	Various	DCR-7653. Move Revision Log to be Section 8.0 and revise affected steps to provide for this change.
10	10/23/08	Various	DCR-7655. Moved Revision Log of Instructions to be last Appendix of the Appendices, revised affected steps to provide for this change, moved Section 3.3.10 to 3.3.11, and updated references.
11	10/15/09	Cover Page/ Appendix A 3.3.5.1	DCR-8665. Revised to remove periodic review date from cover page and example cover page. Clarified that Roles & Responsibilities are to be specific to procedure.
12	01/13/11	Various	DCR-9782. Revise to require incorporation of hazard assessment results into INSTs, update cover page examples, refine definitions for controlled activity and general use, and add that P&Ls/ Pre-Reqs, and steps must within the control of the performer to implement.
13	11/05/12	Various	DCR-11599. Entire document revised to fulfill the needs of the user, to conform to management direction, to comply with current requirements, and to ensure integration of requirements of MP-DOCS-18.3, Developing Management Procedures. Made changes to resolve related part of CAR 69756. Incorporated DOCS-BLUESHEET-09 and ITG-BLUESHEET-120.
14	06/25/13	Step 3.8.2	DCR-12533. Revised step to ensure only one action per sign-off to resolve AI 77770.

TABLE OF CONTENTS

1.0 PURPOSE/SCOPE 1

2.0 ROLES AND RESPONSIBILITIES 2

3.0 PROCEDURE 2

3.1 Work Instruction Requirements and Guidelines 2

3.1.1 Requirements for New and Revised Instructions 2
3.1.2 Guidelines 3

3.2 Work Instruction Format 5

3.2.1 Cover Sheet 5
3.2.2 Table of Contents 6
3.2.3 Purpose/Scope 8
3.2.4 Roles and Responsibilities 9
3.2.5 Precautions and Limitations/Prerequisites 9
3.2.6 Instructions 12
3.2.7 Definitions 14
3.2.8 References 14
3.2.9 Records 15
3.2.10 Exhibits 15
3.2.11 Appendixes 16
3.2.12 Revision Log 16

3.3 Writing Action Steps 17

3.3.1 Basic Action Steps 17
3.3.2 Action Step Performer Designation 22
3.3.3 Conditional Action Steps 25
3.3.4 Branching and Referencing 26
3.3.5 Non-Sequential Action Steps 32
3.3.6 Action Steps Containing Verifications, Notifications, and Data Recording 33

3.4 Hold Points 35

3.5 Warnings and Cautions 35

3.6 Notes 39

3.7 Requirements Identification....41

3.8 Sign Offs....42

4.0 DEFINITIONS....43

5.0 REFERENCES....45

6.0 RECORDS....46

7.0 EXHIBITS....46

8.0 APPENDICES....46

Appendix A– FOI and OI Cover Sheet Format....A1

Appendix B – List of Action Verbs....B1

EXAMPLES

Example 3–1. Verification of effective revision table....6

Example 3–2. Table of Contents....7

Example 3–3. Example of purpose and scope statements....8

Example 3–4. Example of a roles and responsibilities table....9

Example 3–5. Standard placement of exhibits....15

Example 3–6. Structure used for action steps....18

Example 3–7. State the action or objective followed by the means to achieve the action or objective....18

Example 3–8. Examples of applicability statements....23

Example 3–9. Identification of a performer of action step....24

Example 3–10. Branching....27

Example 3–11. Referencing....29

Example 3–12. Conditional statements and referencing.....29

Example 3–13. Routing tables. 31

Example 3–14. Notes used prior to nonsequential action steps. 32

Example 3–15. Identification of a hold point. 35

Example 3–16. Examples of a warning or caution within the body of the instruction. 37

Example 3–17. Example of hazard mitigation action following a warning or caution. 38

Example 3–18. Example of notes. 40

Example 3–19. Rolldown requirement. 42

Example 3–20. Signoff by initials. 42

Example 3–21. Independent verification or second signoff of same action step showing sign off by initials. 43

AMWTP MANAGEMENT PROCEDURE		
MP-DOCS-18.1, Rev. 14	Issued: 06/26/13	Effective: 06/27/13
Developing Written Work Instructions		

1.0 PURPOSE/SCOPE

This procedure establishes the company standard for developing written *work instructions* (INSTs; see def.) and provides the necessary direction for Advanced Mixed Waste Treatment Project (AMWTP) employees when developing and writing written work instructions.

This procedure complies with DOE Order 422.1, Conduct of Operations, which dictates the development of implementing instructions or other appropriate documentation for use during operation of the AMWTP. It provides a standardized process for the development of accurate, complete, and usable work instructions. This document, as a whole, implements the specific requirements of QAPP-01, Quality Assurance Program Plan; MP-TRUW-8.2, Quality Assurance Project Plan; MP-COPS-9.14, Operations Procedures; and LST-COPS-01-IM, Conduct of Operations Implementation Matrix.

Work instructions provide specific direction for performing hands-on technical tasks. Work instructions describe the processes to be followed to ensure that various task functions are effectively integrated and all applicable requirements are appropriately implemented. Additionally, work instructions, when implemented correctly, minimize the potential safety risk to personnel, the public, and the facility as well as protect the environment.

The standards in this procedure apply to all new instructions developed for use by the AMWTP, and all pre-existing instructions as they are revised. Work instructions include but are not limited to:

- Operating instructions
- Emergency instructions
- Surveillance and test instructions
- Maintenance procedures designated as INSTs (but does not include INST-MIs maintained in Engineering Document Control)
- Analytical procedures.

A work instruction can be either *general use* (see def.) or *controlled activity* (see def.) documents. MP-COPS-9.14, provides direction for classifying documents. The classification will appear on the cover page and every page of an applicable work instruction.

Maintenance instructions (MIs) and method statements are developed and approved in accordance with PD-CMNT-01, Nuclear Maintenance Management Program Description.

Analytical chemistry methods (INST-ACMMs) are written and performed in accordance with MP-DOCS-18.8, Developing Analytical Chemistry Methods, and analytical chemistry laboratory procedures (INST-ACLPs) are written and performed in accordance with MP-DOCS-18.9, Developing Analytical Chemistry Laboratory Procedures.

2.0 ROLES AND RESPONSIBILITIES

Performer	Responsibilities
Technical Writers	Apply standards described in this procedure when developing or revising instructions to ensure task functions are effectively integrated and all applicable requirements are appropriately implemented.
Reviewers	
Subject Matter Experts (SMEs)	
Document Owners or Designee	

3.0 PROCEDURE

3.1 Work Instruction Requirements and Guidelines

3.1.1 Requirements for New and Revised Instructions

3.1.1.1 Ensure all new and revised work instructions are reviewed and approved in accordance with the requirements of MP-DOCS-18.4.

3.1.1.2 Document Owner or Designee: Ensure work instruction preparation and validation receive high-level attention of management personnel.

3.1.1.3 Ensure that an initial hazard assessment (HA) is performed on all operating instructions (OIs) and facility operating instructions (FOIs) in accordance with INST-COPS-9.18.4, Hazard Assessment.

3.1.1.3.1 Ensure that every hazard identified in the HA is mitigated at the closest possible location in the instruction to the work activity to be performed that will best aid or assist the instruction performer.

3.1.1.3.2 Ensure that the mitigating step(s):

A. Clearly identifies and alerts performer of the hazard

B. Sufficiently alleviates or assists in the prevention or elimination of any possible consequences of the hazard

C. Is located immediately preceding the step in which the hazard is presented.

3.1.1.3.3 If there are changes to conditions relating to an instruction activity, ensure that a new HA is performed and the new or changed hazards and mitigations are incorporated into the instruction.

3.1.2 Guidelines

3.1.2.1 Ensure the layout of individual pages of work instructions are as they appear in this document or in the established approved instruction templates maintained by Document Services personnel.

3.1.2.2 Ensure that all work instructions provide accurate administrative and technical direction.

3.1.2.3 Develop work instructions with consideration for the human-factor aspects of their intended use.

3.1.2.4 Ensure that references to components exactly match drawings and label-plate identifiers.

3.1.2.5 Ensure that units used are the same as those marked on applicable instrumentation and that charts and graphs are easily read and interpreted.

NOTE: *Normally using forms as exhibits or in an appendix is ill advised. Often when a form is changed, the person who is making the change to the form does not realize that it has been referenced in an instruction, and so the exhibit or appendix is not updated.*

3.1.2.6 Do not include forms in an instruction unless they are needed for illustrative purposes.

3.1.2.6.1 When it is totally essential that an example of a form be included, add it at the point of need or in an appendix.

NOTE: *The extent of detail in work instructions should depend on the complexity of the task, the experience and training of the user(s), the frequency of performance, and the significance of the consequences of error.*

3.1.2.7 Ensure that work instructions contain sufficient but not excessive detail.

3.1.2.8 Ensure that component or system shutdown and restoration requirements are specific and controlled by the instruction.

3.2 Work Instruction Format

NOTE: *An electronic template is available from Document Services. Using the electronic template ensures consistency with current format requirements.*

3.2.1 Cover Sheet

3.2.1.1 Include the cover sheet as the first page of the work instruction.

NOTE 1: *The cover sheet provides a means for the user to quickly determine if the instruction is appropriate for the task at hand and whether the instruction has been approved for use*.

NOTE 2: *Periodic review dates are tracked in the Electronic Document Management System (EDMS) per MP-DOCS-18.4 and are no longer required to be identified on the cover sheet. If the periodic review is present on an existing instruction cover sheet, it will be removed as the instruction is revised.*

(DOE O 422.1)

3.2.1.2 Ensure that the cover sheet is formatted as shown in Appendix A, Work Instruction Cover Sheet Format.

3.2.1.2.1 Include a title that is a simple description of the activity performed in the instruction and that it identifies the system, equipment, or process involved.

3.2.1.2.2 State the use type, whether the instruction is a GENERAL USE or a CONTROLLED ACTIVITY instruction as defined in MP-COPS-9.14, Operations Procedures. (See Appendix A.)

3.2.1.2.3 Include an Approval block with "(*Signature on file. See DCR-XXXXX.*)," and a date.

3.2.1.2.4 When creating FOIs and OIs, include the "Verification of Effective Revision" table. (See Example 3-1.)

Example 3–1. Verification of effective revision table.

Verification of Effective Revision: (After verifying current revision, replace cover page on working copy if more space is needed.)

Initials	Date	Initials	Date	Initials	Date	Initials	Date

3.2.2 Table of Contents

NOTE: *The table of contents assists performers in locating the portions of the instruction needed for a specific operation and is useful for locating a specific appendix.*

3.2.2.1 Place the table of contents on the first page following the cover.

3.2.2.2 Ensure that a table of contents is included with each instruction.

3.2.2.3 Include at least the first- and second-level headings and the title of every appendix, exactly as they appear in the instruction. (See Example 3-2, Table of Contents.)

3.2.2.4 Ensure the number in footer of the table of contents begins with, "-ii -."

Example 3–2. Table of Contents

Controlled Activity *User is responsible to use the correct revision.*

AMWTP INSTRUCTION		
INST-XX-XX, Rev. XA	Issued: TBD	Effective: TBD
Title		

TABLE OF CONTENTS

1.0 PURPOSE/SCOPE 1
2.0 ROLES AND RESPONSIBILITIES 1
3.0 PRECAUTIONS AND LIMITATIONS/PREREQUISITES 1
3.1 Precautions and Limitations 1
3.2 Prerequisites 1
4.0 INSTRUCTIONS 1
4.1 Heading 2 1
4.2 Post-Job Review (This should be the last section before the abnormal section) 2
5.0 DEFINITIONS 2
6.0 REFERENCES 2
7.0 RECORDS 2
8.0 EXHIBITS 2
9.0 APPENDICES 3
Appendix A Type Appendix Title Here A1
Appendix B Revision Log B1

- ii -

3.2.3 Purpose/Scope

3.2.3.1 Use Section 1.0, Purpose/Scope, of the instruction to give a short description of why the process itself is being performed and the range of activities in the process. (See Example 3-3.)

Example 3–3. Example of purpose and scope statements.

1.0 PURPOSE/SCOPE

This instruction provides the actions that are required to operate the AMWTF Process Cooling Water System (640), which is a closed loop system that provides cooling water to the three Brokk manipulators hydraulic power units.

This document applies to all personnel working on or with the system described herein.

1.0 PURPOSE/SCOPE

This procedure provides instruction to allow operators/spotters using crane and slings to raise cake boxes and rotate them so that they are resting on their lid. Due to the thickness of cake boxes, it is necessary to place them into the facility upside down to enable operations to remove the bottoms in order to process cake boxes efficiently. This procedure identifies the approved pre-engineered lifting method for inverting cake boxes.

This procedure applies to only the “old style cake boxes” and is not to be used with the cake boxes with the bolt on the lids.

3.2.3.2 Ensure that the purpose and scope of the instruction:

- Provides sufficient detail and makes it readily apparent exactly what activities the instruction encompasses
- Addresses the instruction limits and what the instruction does or does not cover.

3.2.4 Roles and Responsibilities

3.2.4.1 Use Section 2.0, Roles and Responsibilities, to summarize responsibilities (by job title) of ONLY those specifically identified as performers within the instruction.

3.2.4.2 List performers in table format. (See Example 3-4.)

Example 3–4. Example of a roles and responsibilities table.

Performer	Responsibilities
Operator Technician (OT)	• Performs steps in this procedure, unless otherwise specified.
Radiological Controls Technician (RCT)	• Performs radiological surveys and labeling.
Shift Supervisor (SS)/Designee	• Verifies information on Form-1727, Non-AMWTP Generator Shipment Request, or Form-1904, Offsite Waste Generator Container Certification • Ensures waste shipped has been accepted by receiving facility • Performs post-job review.

3.2.5 Precautions and Limitations/Prerequisites

3.2.5.1 Under Section 3.0, Precautions and Limitations/Prerequisites, include separate subsections for precautions and limitations and prerequisites.

3.2.5.2 If no hazards have been identified in the hazard assessment for the work instruction, consider including the following note at the beginning of Section 3.0:

NOTE: *No hazards have been identified for this work activity as documented in HA-N-XXX.*

3.2.5.3 If there are no precautions and limitations or prerequisites identified, then place the word "None" under Section 3.0, where text would normally begin.

3.2.5.4 Precautions and Limitations

3.2.5.4.1 Use Section 3.1, Precautions and Limitations, to inform users of hazards (including potential hazards) to personnel or equipment.

3.2.5.4.1.1 When identifying possible P&L steps, consider possible exposure to personnel or the environment from:

- Radiation and contamination
- High-temperature fluids
- Hazardous substances
- Electrical shocks
- Excessive noise
- Confined space issues
- Falls
- Fires
- Moving equipment or parts.

3.2.5.4.2 Ensure the P&L steps identify precautions that affect the entire instruction or that occur at more than one point in the instruction.

3.2.5.4.3 Ensure limitations define boundaries that are not to be exceeded.

3.2.5.4.4 Avoid generic P&Ls that are part of an employee's position description cited on an approved method of work (AMOW), or inherent in the task.

NOTE: *Actions that should be performed to mitigate the consequences of a hazard should be in the instruction section immediately preceding the step in which the hazards is presented.*

3.2.5.4.5 Do **NOT** present actions that must be performed in the P&L section.

3.2.5.5 Prerequisites

3.2.5.5.1 Use Section 3.2, Prerequisites, to identify actions that must be completed and requirements that must be met and/or signed off before the procedure user begins performing Section 4.0, Instructions.

3.2.5.5.2 Ensure prerequisites are written in past tense, stating that the activity has been performed or completed prior to performing the instruction section of the instruction.

3.2.5.5.3 When determining prerequisite actions, consider the following items:

- Planning and coordination
- Performance documents
- Special tools, parts, and supplies
- Equipment, tools, or testing equipment verified as operable, calibrated, or inspected and in good condition
- Field preparations
- *Approvals* (see def.) and *notifications* (see def.)
- Activities under the control of the operator.

NOTE: *MP-COPS-9.17, Performing Pre-Job Briefings and Post-Job Reviews, identifies when it is appropriate to perform a pre-job briefing.*

3.2.5.5.4 Include a pre-job briefing statement as a step, as appropriate, in the prerequisite section of all OIs and FOIs that reads as follows:

> A pre-job brief has been performed in accordance with MP-COPS-9.17, Performing Pre-Job Briefings and Post-Job Reviews, as directed by the SS prior to performing work in this procedure.

3.2.6 Instructions

3.2.6.1 Use Section 4.0, Instructions, to identify the performer and provide a step-by-step sequence of activities to be performed.

3.2.6.1.1 Ensure it is written in a clear, concise, and complete manner.

3.2.6.1.2 Ensure that it provides specific context and includes appropriate reporting requirements, as needed, for ensuring that important activities have been satisfactorily accomplished.

3.2.6.2 Ensure that each instruction (as appropriate):

- Is divided into main operations or the major events to be performed and that these are broken out into heading and subheading

- Identifies the performer(s) by title at the beginning of each step they perform

  A. If performer completes multiple tasks, then related substeps are placed under the main callout of the performer.

  OR

  B. If performer completes numerous sections and step, a note should be placed at the beginning of the sections and should state by title that that individual will perform the following sections or steps.

NOTE: *If any item under Section 3.2.6.3 is not required or is inappropriate to the instruction, they may be omitted.*

3.2.6.3 Ensure that subsections to the instruction include:

A. Performance activities that contain the action steps that prescribe the principal tasks and subtasks of the instruction and are organized in the order that they will be performed.

B. Performance sections that are divided into subsections that logically group related activities.

C. Headings that are used for each subsection that reflect the activity rather than a generic title (for example, “Removing the Actuator,” rather than “Actuator”).

D. Specific action steps within the performance sections that are written in accordance with the requirements of Section 3.3, Writing Action Steps.

E. Cautions and warnings that are written in accordance with Section 3.5.

F. Post-performance activities that stipulate actions required to close out the activity including testing, restoration, and compiling results.

NOTE: *MP-COPS-9.17 identifies when it is appropriate to perform a post-job review.*

3.2.6.4 Ensure all OIs and FOIs have a "Post-Job Review" section, and/or a step, as appropriate, that is worded as follows:

> SS: Perform a post-job review in accordance with MP-COPS-9.17.

3.2.7 Definitions

3.2.7.1 Use Section 5.0, Definitions, to define unusual or unfamiliar words and phrases having a special meaning or application within the instruction.

3.2.7.1.1 If a word may be taken more than one way or it is unfamiliar to the user, define it in the Definitions section.

3.2.7.2 Italicize the first use of the word being defined within the body of the instruction and then insert "(see def.)" after the word.

3.2.7.3 List word to be defined in the same format as in this instruction.

3.2.8 References

3.2.8.1 Use Section 6.0, References, to identify documents or instructions that are discussed within the instruction.

NOTE: *The revision level is never used in a reference unless the reference used is specific to one particular revision.*

3.2.8.2 List all references with the document number and a complete title.

3.2.8.3 List references in the same format as in this instruction.

3.2.9 Records

3.2.9.1 Use Section 7.0, Records, to identify specific records generated through implementation or execution of the work instructions.

3.2.9.2 List records identified in table format, along with a categorization and disposition statement per MP-DOCS-18.2, Records Management.

3.2.10 Exhibits

NOTE: *Exhibits may include representations of graphs, maps, information tags, etc., and may appear at any point in the instruction.*

3.2.10.1 Use Section 8.0, Exhibits, to include any necessary graphs, maps, etc., that is tied to or relates to the instruction or that will help the user to better understand an operation in the instruction.

3.2.10.2 List each exhibit used within the instruction under Section 8.0.

3.2.10.3 Place the actual exhibit on the following page. (See Example 3-5.)

Example 3–5. Standard placement of exhibits.

8.0 EXHIBITS

Exhibit 1 – Waste Material Parameter Descriptions

----------**Page Break**----------

Exhibit 1 – Waste Material Parameter Descriptions

Waste Material Parameter	Help Description
Iron-based metals/alloys	Iron and steel alloys in the waste; does not include the waste container materials
Aluminum-based metals/alloys	Aluminum or aluminum-based alloys in the waste material
Other metals	All other metals found in the waste materials

3.2.10.4 If there are no exhibits associated with the instruction, then place the word "None" under Section 8.0.

3.2.11 Appendixes

3.2.11.1 Use Section 9.0, Appendixes, to provide only supplemental material or information that is more conveniently located after the main body of an instruction.

3.2.11.2 Ensure that the "Revision Log" is always the final appendix.

3.2.11.3 Ensure that the appendix only includes forms, examples, tables, figures, or graphs and the "Revision Log."

3.2.11.4 Reference each appendix somewhere within the text of the operating instruction.

3.2.11.5 On the first page of the appendix, identify the appendix with a letter (for example, Appendix A, Appendix B, etc.) and its title.

3.2.11.6 Ensure each page is numbered with the individual page and the total number of pages within the appendix (for example, "A1 of A6").

3.2.11.7 Refrain from ever using vendor information as an appendix, but integrate approved vendor information into the text of the Section 4.0, Instructions, rather than referencing the information.

3.2.12 Revision Log

3.2.12.1 Use the Revision Log (always the last appendix) to identify all revisions to the instruction and the effective dates that each revision was approved.

3.2.12.2 Ensure the Revision Log provides a summary of changes made for each revision with enough detail for the user to have a general understanding of the changes made.

3.3 Writing Action Steps

NOTE: *The basic element of an action step is a command to perform a specific action. An action step answers the question "what is to be done." Additional elements, such as cautions and conditional statements, add precision and detail to instruction.*

3.3.1 Basic Action Steps

3.3.1.1 Ensure that following elements are addressed:

3.3.1.1.1 Include only ONE action for each step.

3.3.1.1.1.1 If steps are so closely related that they constitute one overall action, combine them in one step (for example, "Sign, date, and transmit the completed form to Records Management.").

3.3.1.1.2 Use the simplest words that convey the correct meaning.

3.3.1.1.3 Organize steps in the order of performance unless otherwise stated.

3.3.1.1.4 Ensure any necessary preparatory steps are placed directly before the step that requires the preparatory action.

3.3.1.1.5 When transferring between instructions is necessary, ensure the instructions clearly guide the performer. (See Section 3.3.4.1, Branching, and Section 3.3.4.2, Referencing.)

3.3.1.2 Start the basic action step with a singular present tense *action verb* (see def.) such as “start,” “stop,” “open,” “close,” etc. (refer to Appendix B).

3.3.1.2.1 Unless it is a conditional action step, ensure that the verb is followed by the direct object. (See Example 3-6.)

Example 3–6. Structure used for action steps.

Action Verb	Direct Object	Supportive Information
Store	bulged drums	on spill pallets planar array

3.3.1.2.2 Describe the direct object of the verb and the recipient of the object.

3.3.1.2.3 When possible, complete the basic action step with supportive information about the action verb and the direct object.

3.3.1.3 Place emphasis on the main action or objective of the step by stating the action or objective before stating exactly how to achieve the action or objective. (See Example 3-7.)

Example 3–7. State the action or objective followed by the means to achieve the action or objective.

4.1.9 Secure the drum and turntable to the lift table by positioning and locking down the lower drum stabilizing clamps.

3.3.1.4 Ensure the steps are within the control and ability of the designated performer to implement.

NOTE: *An ambiguous word lacks clarity and is hard to define. It may have several possible meanings or interpretations. Using an ambiguous word in an instruction may set the user up for error or harm.*

3.3.1.5 Avoid ambiguous words, such as *almost*, *near*, *approximately*, etc.

3.3.1.6 Limit the use of the words, "as necessary," "as needed," or "as required" in a step.

3.3.1.6.1 Consider the use of conditional action steps (see Step 3.3.3) to better define parameters and better describe when something is needed or necessary.

3.3.1.7 Specify limits and/or tolerances for operating parameters and ensure they are consistent with the readable accuracy of instrumentation.

3.3.1.7.1 Ensure the step does not require the users to perform mental arithmetic to determine if a specified parameter is acceptable.

3.3.1.7.2 Avoid requiring users to make conversions from one unit of measure to another whenever possible.

3.3.1.7.2.1 If conversions are essential, provide an aid for the user.

3.3.1.7.2.2 When possible, specify instrument indications as a range (for example, "from 0.03 to 0.04 mV").

3.3.1.7.2.3 Specify limit values, when necessary, clearly (for example, "0.035 mV or less…0.035 mV or greater").

3.3.1.8 Identify equipment accurately and precisely as it is in the facility or as it is labeled in the field.

3.3.1.8.1 If the equipment is not labeled within the facility, use equipment nomenclature precisely as it appears on the latest revision to the applicable engineering drawing or specifications.

3.3.1.8.2 When equipment or instruments are identified in the instruction, ensure it matches exactly with the label, drawing, or nomenclature list found in the field of use.

3.3.1.9 Ensure the *acceptance criteria* (see def.) for surveillance or test instructions are easily discerned, including tolerances and units.

3.3.1.9.1 If calculations are needed to compare data to acceptance criteria, explain the calculations clearly.

3.3.1.10 Ensure that only necessary information is provided.

3.3.1.10.1 Be specific when directing work.

3.3.1.10.1.1 Use terms that are generally known or used by the user.

3.3.1.10.1.2 Once a term, a location, or a type of equipment is identified, use the same nomenclature throughout the instruction and ensure it is consistently identified the same way throughout the instruction.

3.3.1.10.1.3 Use consistent and correct terminology, grammar, and punctuation.

3.3.1.11 Spell out an acronym at its first use, unless the acronym is listed in the table below.

NOTE: *The acronyms listed below are familiar to all users and commonly used throughout the AMWTP. These acronyms do not have to be spelled out in an instruction. This only applies to instructions.*

Acronym	Meaning
AMWTF	Advanced Mixed Waste Treatment Facility
AMWTP	Advanced Mixed Waste Treatment Project
BBWI	Bechtel BWXT Idaho, LLC
CBFO	Carlsbad Field Office
DOE	Department of Energy
DOE-ID	Department of Energy-Idaho Operations Office
INST	instruction
ITG	Idaho Treatment Group
OI	operating instruction
MP	management procedure
RPT	report
RWMC	Radioactive Waste Management Complex

3.3.1.11.1 If the acronym is not listed above, then refer to the AMWTP Homepage under *Documentation* and only use acronyms that are listed in that approved acronyms and abbreviations list.

3.3.1.11.2 Make additions or corrections to the approved acronyms and abbreviations list, as needed, by contacting Document Services personnel.

3.3.1.11.3 Avoid using acronyms and abbreviations for short, simple words and terms.

3.3.1.12 Never use the action word verify, unless the method used for verification is included.

3.3.1.13 Do not use the words *shall, must,* or *will* (or similar words) in steps.

3.3.1.14 Ensure steps are placed on the same page on which they are started.

3.3.1.15 Never break or separate individual lines in the step across two pages. Never separate an upper-level step from its substep(s) or from a list of items.

NOTE: *When substeps follow on the next page, the most user-friendly way is to leave only one substep with the main step, so that the performer will intuitively know that there are more steps to follow.*

3.3.1.15.1 If substeps or list items must be separated from the main step by a page break, ensure at least one substep or list item is kept on the page with the main step.

3.3.1.16 Avoid unnecessary information in action steps.

3.3.1.17 Use emphasis techniques (for example, **bold**, *italics*, or <u>underlining</u>) to highlight important information, with the following constraints:

3.3.1.17.1 Do not use all capital letters for blocks of text.

3.3.1.17.2 Do not capitalize the first letter of any words unless they are formal, proper nouns in accordance with standard American English usage or they are the first word of a sentence.

3.3.1.17.3 Avoid the overuse of multiple emphasis techniques.

3.3.2 Action Step Performer Designation

3.3.2.1 Ensure that performers are identified at the beginning of the step they perform.

3.3.2.1.1 If one category of performer performs all the steps of the instruction, or a section or sections

of the instruction, place a note that identifies the job title or function of the worker performing the instruction before the first affected action step or section(s). (See Example 3-8.)

3.3.2.1.2 If it is readily apparent by the applicability statement in the Section 1.0, Purpose and Scope, or in Section 2.0, Roles and Responsibilities (see Example 3-8 below), of the instruction that only one performer (such as an operations technician) will be performing the steps, then do not specify implied performer.

3.3.2.1.2.1 Apply any additional performers at the appropriate point of need in the instructions.

Example 3–8. Examples of applicability statements.

This procedure applies to all personnel generating or packaging waste at the AMWTP.

Performer	*Responsibilities*
Operations Technician (OT)	• Unless otherwise specified, performs the steps in this instruction.

NOTE: Section 4.0 is performed by operations technicians unless otherwise stated.

3.3.2.1.3 If several people with different job titles or functions perform actions, ensure each person is identified by either job title or function in the step they perform.

3.3.2.1.4 If each performer completes several steps in a series, write these steps as substeps below the parent step that directs who is to perform them.

3.3.2.1.5 If someone other than the primary instruction user is responsible for performing an action step, identify the performer at the beginning of the affected action step. (See Example 3-9 below.)

Example 3–9. Identification of a performer of action step.

4.1.4 IS/IH: Determine the need for and provide subsequent monitoring, as necessary, for airborne contaminates per current IS/IH Exposure Assessment and MP-ISIH-2.11, Industrial Hygiene Program.

4.1.5 SS: Assign a person to monitor carbon monoxide (CO) levels in air supply system to the PremAire respirator system.

4.1.5.1 Instruct the assigned person to notify the job supervisor whenever CO levels are in excess of 10 ppm.

4.1.6 RCT: Specifically identify SBA user airlines for each user at the manifold air outlet.

4.1.7 Job Supervisor: Ensure that a tool is staged at the entrance door for each SBA user for emergency cutting of the airline hose.

4.1.8 SBA User: Inspect Level B garments and PremAire airline respirator, and then complete Form-1541, Sections 1 and 2, prior to donning Level B garments.

3.3.2.1.6 If there are many performers or frequent changes between performers, designate the performer responsible for each step to improve clarity.

3.3.3 Conditional Action Steps

3.3.3.1 Use **ONLY** the following *logic terminology* (see def.) in *conditional action steps* (see def.):

A. **IF** or **WHEN** to present the condition to the user

B. **THEN** to present the action

C. **OR** or **AND** to define more complex conditions or actions

D. **NOT** to negate the condition.

3.3.3.1.1 Do not use words, such as *except, unless, but, only, after, before*, or *while* to present conditional information.

3.3.3.1.2 Use **WHEN** to present a condition or event that is expected to occur.

3.3.3.1.3 Use **IF** to present a condition that is possible but not expected.

3.3.3.1.4 Bold and capitalize conditional action steps for emphasis.

3.3.3.1.5 To write a conditional step, first describe the condition, and then add the action to be taken if the condition applies.

3.3.3.1.6 Avoid using both **AND** and **OR** in the same conditional statement, since the resulting logic can be ambiguous and hard to follow.

3.3.3.1.7 Do not combine multiple conditional statements together into one step; break them into steps and substeps instead to make them more understandable and to better meet conduct of operations requirements.

3.3.4 Branching and Referencing

NOTE 1: *Branching and referencing have much in common, but there is a major difference between the two activities: referencing returns the instruction user to or near the original position in the base instruction; branching does not return the user to the base instruction.*

NOTE 2: *If writing a branching or referencing step, the writer should be careful to direct the user to the correct point elsewhere in the same instruction or to the correct other instruction. Incorrect branching or referencing instructions may force the instruction user into an endless loop or send the user to an inappropriate destination that may not result in the expected outcome.*

NOTE 3: *Branching or referencing may be appropriate when:*

A. The information is crucial to activity performance.

B. It is not practical to incorporate the information into the base instruction because:

- *The material consists of a large group of steps or a long table, such as three or more steps with substeps, or a half page or more of text*
- *Incorporating the material into the base instruction would result in a needlessly long or confusing instruction*
- *The material is repeated frequently.*

3.3.4.1 Branching

NOTE: *A branching step should identify three specific elements: (1) departure point, (2) destination, and (3) action to be performed at the destination.*

3.3.4.1.1 At the departure point, place the emphasis on the user being directed to another portion of the same instruction or to another instruction, and emphasis that the user is not expected to return to the sequence of steps that initiated the branch.

3.3.4.1.2 In branching, ensure that the notice of departure, the destination, and the action to be performed once the destination is reached are all stated in ONE step.

3.3.4.1.3 To use branching (see Example 3-10), perform the following:

3.3.4.1.3.1 Type "**GO TO**" as the branching action verb phrase, followed by the specific location—a step number or a section number and title, if the branch is to another location in the same instruction, or the document identifier and title.

3.3.4.1.4 Ensure there is no punctuation after the action statement.

3.3.4.1.5 On the following line, type "**WITHOUT RETURNING TO** this step."
(See Example 3-10.)

Example 3–10. Branching.

4.1.6 **GO TO** Section 4.3.9 and create a new item
WITHOUT RETURNING TO this step.

4.5.1 **GO TO** INST-OI-24, Packaging Radioactive Waste, to handle and package waste material
WITHOUT RETURNING TO this step.

3.3.4.2 Referencing

NOTE: *A referencing step identifies four specific elements: (1) departure point, (2) destination, (3) action to be performed at the destination, and (4) return point.*

3.3.4.2.1 Ensure the referencing step:

- Directs the user to a destination or location in the same instruction or to another instruction
- Specifies the actions performed
- Instructs the user to return at or near the originating step.

3.3.4.2.2 When the reference is to a specific location with a subsequent return at or near the starting point, avoid unambiguous instructions.

3.3.4.2.3 To use referencing (see Example 3-11), perform the following:

3.3.4.2.3.1 Type "**GO TO**" at the referencing action verb phrase, followed by the step number or document identifier and title, and the activity to be performed, followed by a semicolon.

3.3.4.2.3.2 On the next line, type "**THEN RETURN TO**" followed by the step number designated as the reentry point. (See Example 3-11.)

Example 3–11. Referencing.

4.1.6 **GO TO** Section 4.3.9 and create a new item;
THEN RETURN TO Step 4.1.7.

4.5.1 **GO TO** INST-OI-24, Packaging Radioactive Waste, to handle and package waste material;
THEN RETURN TO Step 4.5.2.

3.3.4.3 Complex Situations Involving Conditional Statements, Branching, and Referencing

3.3.4.3.1 When directing instruction users to make choices based on whether a particular condition or situation exists, or will exist, provide steps that use some combination of conditional statement with logic operators (**IF**, **WHEN**, **THEN**, **OR**, **AND**, or **NOT**), branching, and referencing. (See Example 3-12.)

Example 3–12. Conditional statements and referencing.

4.4.3.1 **IF** assay result transmitted to FTS incorrectly,
GO TO INST-FOI-27, FTS Operations, and place FTS in SUSPENSION MODE;
THEN RETURN TO Step 4.4.3.2.

4.8.2 Handle waste.

4.8.2.1 **IF** performing bulk load out,
GO TO Section 4.6 and perform bulk loadout of waste;
THEN RETURN TO Step 4.8.3.

4.8.2.2 **IF** performing independent packet addition,
GO TO Section 4.7 and perform individual packet handling;
THEN RETURN TO Step 4.8.3.

3.3.4.3.2 When dealing with complex situations with a number of possible conditions, consider using a routing table (see Example 3-13).

A. The routing table helps instruction users easily determine what actions need to be performed in response to a condition or desired condition.

B. Routing tables also function as an organizational tool that serves as a convenient reference for the user to determine what section or steps need to be performed.

3.3.4.3.2.1 Introduce a routing table with a step that directs the performance of a section, step, or another stand-alone instruction based upon, for example, a system condition, desired condition, or expected outcome.

3.3.4.3.2.2 As with referencing and branching steps, provide the user with accurate and clear directions in both the introductory step and the table to avoid confusion.

Example 3–13. Routing tables.

4.1 **GO TO** the appropriate instruction section from the following table, according to the task to be performed;
THEN RETURN TO this step if further activities will be performed:

Task	Section
Container Integrity	4.2
Waste Drum Extraction in the Retrieval Contamination Enclosure	4.3
Waste Drum Extraction in the Inner Contamination Enclosure	4.4
Legacy Non-commingled Waste Repackaging	4.5
Legacy Commingled Waste Repackaging	4.6
Export Container from the ICE into the RCE or from the RCE into the RCE Export Airlock	4.7
Waste Container Overpacking	4.8
Post Job Review	4.9
Abnormal and Infrequent Operations	4.10

4.11.1 **GO TO** the appropriate section from the following table according to task being performed,
THEN RETURN TO this step, if further activities will be performed:

Task	Section
Tool Change-out or Servicing	4.11.2
Conducting Ancillary Activities	4.11.3
Mobile BROKK De-Energizing and Energy for Production Use	4.11.4

3.3.5 Non-Sequential Action Steps

3.3.5.1 Ensure performers perform action steps in the order presented unless specifically directed otherwise by either the instruction or management.

3.3.5.2 When it is not necessary to perform steps sequentially, then sequence the steps according to usability criteria, such as according to equipment or control board layout, to reduce opportunities for error.

3.3.5.3 If a series of action steps may be performed nonsequentially, ensure that it is stated in a note (see Example 3-14) prior to the first step.

Example 3–14. Notes used prior to nonsequential action steps.

NOTE: *Steps in Section 4.1 may be performed out of sequence with the approval of the SS.*

NOTE: *Steps 4.2.1 through 4.2.4 may be completed in any order.*

NOTE: *After receiving approval from the SS, steps in this instruction may be performed concurrently or out of sequence with other steps.*

3.3.5.4 Consider providing a check-off on an appropriate form for each action when inadvertently skipping the action could pose a severe safety or health consequence.

3.3.6 Action Steps Containing Verifications, Notifications, and Data Recording

NOTE: *Steps containing verifications, notifications, and* data recording *(see def.) have many similarities, but each serves a unique purpose. AMWTP uses forms that correspond with instructions for sign-off purposes. Signoffs are incorporated per Section 3.8.*

3.3.6.1 Clearly delineate steps requiring *independent verification* (see def.), *dual verification* (see def.), and/or approval.

3.3.6.2 In verification action steps, consider starting the step with words such as *verify*, *check*, or *ensure*.

NOTE: *If the condition to be verified or checked is not found, appropriate actions to be taken will be provided.*

- *Verify* is used to check for conformance with criteria and to see if a specific action has been carried out.
- *Check* calls for a comparison with stated requirements.
- *Ensure* could require additional action by the user to reach a specific value or to complete an action.

3.3.6.3 Use notification action steps when reporting is required after given criteria are met and include the method for making the notification.

3.3.6.4 Use data recording action steps when directing the user to record desired data and include the method for recording.

3.3.6.4.1 If special attention is needed, use the following criteria for the data entry and perform sign-offs per Section 3.8:

A. Data recording action steps specify required independent or dual verification and inspection action steps (the number of independent/dual verification and inspection action steps increase as the consequences of performance error increase).

B. They include directions for notifying other personnel as discrete action steps. Actions requiring notifications of others often include:

- System alignments to be performed
- Systems to be removed from or returned to service
- Alarms that may annunciate during the instruction
- Equipment actuations that are expected to occur during performance of the instruction
- Actions with electrical or mechanical interlocks involved (e.g., interlocks to be honored or overridden)
- The effects of precautions and limitations on the operating conditions, noting which equipment will be inoperative and which lights, alarms, or annunciators will react
- Changes or special conditions established by the instruction that could affect or appear to affect other equipment or systems. For example, performing the instruction could involve mechanical or electrical bypass (lifted leads, inhibits, jumpers, and fuse removals) or other functional restrictions.

3.4 Hold Points

NOTE 1: Hold points *(see def.) identify action steps requiring an inspection of the actions performed before initiating successive action steps.*

NOTE 2: *Hold points may involve Quality Assurance, Radiological Controls, Engineering, or other technical disciplines.*

3.4.1 Clearly delineate hold points and identify them by a descriptive phrase that indicates the type of hold that is involved.

3.4.2 Type the hold point in boldface print and upper case letters immediately before the step that must be completed before proceeding. (See Example 3-15.)

Example 3–15. Identification of a hold point.

RADIOLOGICAL HOLD

4.1.19 Perform radiological survey of valve internals.

3.5 Warnings and Cautions

NOTE 1: *Warnings and cautions attract attention to information that is essential to safe performance and usually consist of the conditions, design limitations, practices, and instructions to be complied with to avoid loss of life, personal injury, health hazards, or damage to equipment.*

NOTE 2: *A warning identifies conditions and hazards that could cause harm to people and a caution identifies conditions and hazards that could affect or damage equipment.*

3.5.1 Ensure a hazard assessment is performed in accordance with INST-COPS-9.18.4 to identify the hazards for each instruction/process.

3.5.1.1 Review instructions for potential hazards with technical specialists or SMEs to determine warnings or cautions that need to be included.

3.5.1.2 After hazards are identified, determine applicable steps of the instruction where the addition of information is necessary.

3.5.2 Review each action step and list the potential hazards in warning or caution format as shown in Example 3-16.

A. Warnings alert users to conditions, practices, or instructions that must be observed to avoid potential hazards to personnel, the public, or the environment.

B. Cautions alert users to conditions, practices, or instructions that must be observed to avoid potential hazards involving products, equipment, and conditions adversely affecting site operations.

3.5.3 Position warnings and cautions so that they are complete on one page and appear immediately before and on the same page as the action step(s) to which they apply.

3.5.4 Place warnings ahead of cautions whenever more than one type is used at the same point in an instruction.

3.5.5 Ensure that warnings and cautions never contain actions.

3.5.6 Do not embed an action step in a warning format (for example, do not rewrite the instruction “Shut the valve,” as “The valve should be shut”).

Example 3–16. Examples of a warning or caution within the body of the instruction.

WARNING

Anchor pins set above surface grade may create tripping or puncturing hazards to personnel.

CAUTION

Anchoring pins set above surface grade may create puncture hazards to equipment tires.

4.9.6 Ensure protective caps are placed on the anchor pins at all times except during installation and removal.

(EDF-0441)

WARNING

Combustible material left in the hot work area may present a fire hazard to personnel.

CAUTION

Combustible material left in the hot work area may present a fire hazard to equipment.

4.5.4 Ensure that all combustible material has been removed from the hot work area in accordance with the Fire Protection Program or otherwise secured against ignition during the hot work.

3.5.7 Ensure that cautions and warnings provide

- Description of the hazardous condition
- Consequences of failing to heed the warning or caution
- Critical time considerations when time considerations are appropriate for the caution or warning.

3.5.8 Present the text of warnings and cautions using appropriate techniques to ensure visual identification.

3.5.8.1 Do not use all capital letters to distinguish warnings and cautions because they are hard for users to read.

3.5.9 Include only one topic in each warning or caution.

3.5.10 If the danger is present during the entire process or activity, place the warning or caution in the P&L section.

3.5.10.1 Repeat information in P&L section as separate cautions or warnings within the body of the instruction as it applies to individual action steps using the format shown in Example 3-17.

Example 3–17. Example of hazard mitigation action following a warning or caution.

WARNING

The actuator head assembly is spring-loaded and may eject the pivot assembly during disassembly and cause harm to personnel.

4.5.8 Point the actuator and pit port(s) away from you and other workers during removal of the actuator head assembly.

4.5.9 Remove the actuator head assembly using special tool ST-4.

3.5.11 Avoid overusing warnings and cautions.

3.5.12 Number each warning or caution when more than one exists.

3.5.13 Include a step immediately after the warning or caution, yet before the step that presents the hazard, describing the actions to mitigate the consequences of the hazard. See Example 3-17.

3.6 Notes

NOTE: *Notes call attention to important supplemental information and are used to assist the user in making decisions or improving task performance. The information can be a reminder of preparatory information needed to perform the activities of an instruction or action step.*

3.6.1 Avoid excessive use of notes, as numerous notes present potential confusion to an instruction user and should be discouraged.

3.6.2 Whenever possible, convert notes to action steps.

3.6.3 Convert notes that are repeated throughout an instruction into a general instruction or a P&L as appropriate.

3.6.4 Position notes so that they are complete on one page and appear immediately before and on the same page as the action step(s) to which they apply.

3.6.5 Ensure warnings and cautions are placed ahead of notes whenever more than one type is used at the same point in an instruction.

3.6.6 **NEVER** include ACTIONS in notes.

3.6.6.1 Remove embedded actions from the note and replace it with action steps.

3.6.7 **NEVER** use the words *SHALL*, *MUST*, or *WILL* (or similar words) in notes, since these words represent requirements and implied actions.

3.6.8 Use the format shown in Example 3-18 for placing notes into instructions.

Example 3–18. Example of notes.

NOTE: *When one PAR control panel is being used, no other PAR control will function.*

4.5.1 Ensure that the key switch is in the ENABLE position on PaR CP #3.

4.6 Outside Storage Area Requirements

NOTE 1: *Containers within a TRUPACT are allowed to contain up to 1% free liquids by volume and still be placed in compliant storage in the outside storage area.*

NOTE 2: *A maximum of six trailers loaded with TRUPACT/HALFPACT containers may be stored in the outside storage area.*

4.6.1 Ensure that only TRUPACT/HALFPACT containers loaded on trailers are stored in the outside storage area.

NOTE: *A timed duration starts when fluid collection begins in Step 4.3.2 below.*

4.3.2 Collect fluid from the end of the hose (at the floor drain) into a graduated cylinder.

3.6.9 Write notes as short, concise statements rather than as commands to distinguish them from action steps (for example, “The following action step starts a timed duration.”).

3.6.10 Italicize *notes* as an emphasis technique to distinguish notes from cautions or warnings.

3.6.11 Address only one topic in each note.

3.7 Requirements Identification

3.7.1 Incorporate appropriate information from applicable s*ource documents* (see def.) in instructions.

3.7.2 Identify, as required, a step that implements a requirement and/or source document from an external source, which could include, but is not limited to:

- RCRA Permit
- Quality Assurance plan
- WIPP requirements
- Documented Safety Analysis
- DOE orders
- Contractual requirements.

3.7.2.1 Place a *requirement rolldown* (see def.) after the step it applies.

3.7.2.1.1 Place the reference to the *source requirement* (see def.) in parentheses and bold letters, directly below the step to which it applies and ensure it is right margin justified.
See Example 3-19.

3.7.2.2 If a requirement rolldown applies to a step with substeps collectively, ensure the rolldown reference follows or is placed at the end of all the substeps.

Example 3–19. Rolldown requirement.

3.1.1 Containers holding calibration sources shall be physically distinct from other containers to be handled in the Characterization Facility and shall hold less than 380 FGE ^{239}Pu.

(RPT-NFCS-08, CWR 7.3.4 #5).

4.1.3 Monitor HEPA filter banks and evaluate for any significant loss of differential pressure across HEPA filters for filter failure.

(HWMA/RCRA Permit)

4.1.3.1 **IF** a pre-filter D/P exceeds 3.0-in. w.g.,
THEN notify the SS.

(TSA-RE PTC)

4.3.12 Ensure that the cabinet and survey doors are closed.

(RPT-TSR-03, SAC 5.2.7)

3.8 Sign Offs

3.8.1 Specify *critical step*s (see def.) that include signatures, initial, and/or check-offs on the appropriate form(s) for the instructions being worked as shown in Example 3-20.

Example 3–20. Signoff by initials.

SIGN OFF

4.3.21 Verify ISV Pump A discharge valve (ISV-A-D2) CLOSED.

3.8.2 Ensure there is only ONE action per signoff.

3.8.3 If the action step is to be signed off by someone other than the principal performer or an independent witness or other second sign-off is needed, place the title or function of the responsible person next to the SIGN OFF designator and in parentheses as shown in Example 3-21.

Example 3–21. Independent verification or second signoff of same action step showing sign off by initials.

SIGN OFF (Operations Technician)

SIGN OFF (Independent Verification)

4.2.2 Verify safety system pneumatic valve (ISV-P-2) CLOSED.

3.8.4 Do not combine two closely related actions, each requiring a signoff, into a single action step.

3.8.4.1 Ensure each one is made a separate action step with its individual signoffs.

3.8.5 In some instances, performing an action sign off depends on a condition or combination of conditions. (Refer to Section 3.3.2.1.6.)

4.0 DEFINITIONS

Acceptance criteria. Criteria that provide a basis for determining whether an activity has succeeded or failed. Acceptance criteria may be qualitative or quantitative.

Action verb. The part of speech used to indicate an action or state of being.

Approvals. Approvals are permission (OKs) from the responsible person(s) that an action or activity may take place. Approvals are usually obtained in written form, by signature or initials.

Conditional action steps. These are used when a decision is based upon the occurrence of a condition or a combination of conditions. The use of conditional action steps is extremely important in technical instructions as they structure the decisions required by the user.

Content. Subjects, topics, and technical information contained in an instruction.

Continuous action steps. Action steps that apply for a period of time while the instruction is being executed.

Controlled activity. Instructions that have been determined to require additional rigor during performance due to the complexity of the activity, the skills and training of the performers, the potential for errors during the performance of the instruction, and/or the potential significance of performing the instruction incorrectly. These instructions contain critical steps that if not performed as defined could result in significant impact(s) to the safety of workers, public, project or environment. The PORC is responsible for identifying these instructions using a graded approach and considering the factors discussed here.

Critical step. A procedure step or action that, if performed incorrectly, will cause irreversible harm to facility equipment or people or that will significantly affect facility operation.

Data point. A discrete item of information. A data point is often quantitative but may be qualitative as well.

Data recording. Writing down *data points* (see def.) to obtain a written record of particular conditions at a given time. Data may be recorded for QA purposes or for use in further calculations or verifications.

Dual verification. Dual means that the person performing the verification will observe performance of the activity per MP-COPS-9.33, Conduct of Operations Performing Independent Verifications.

General use. Instructions that have been determined, using a graded approach, to require a more moderate degree of rigor than controlled activity instructions, based on the complexity of the task, the potential for errors, and the potential significance of performing the instruction incorrectly. Activities that can be completed using the skills and training of the performer, or for which the performer may only need the instruction as a reference are typical candidates for classification as general use instructions.

Hold point. An identified point in an instruction or instruction where users are required to wait until certain conditions exist or specific approvals or notifications have been made before continuing on in the instruction.

Independent verification. Independent means that the person performing the verification will not be influenced by observation of, or involvement in, the activity that establishes the component position or status. For most operating activities, independence can best be achieved by separating the operation and the verification by time and distance. These verifications are performed per MP-COPS-9.33.

Logic terminology. One of the six words used in conditional action steps to structure the condition and relate it to the action: IF, WHEN, THEN, AND, OR, and NOT.

Notification. Notifications inform the appropriate personnel that an action or activity is about to occur or has already occurred.

Requirement rolldown. A requirement that originates from a higher tier document such as DOE Orders, federal requirements, etc. that is implemented by a lower tier procedure or instruction.

Source requirements. Requirements implemented by the instruction.

Work instruction. Detailed written instructions that prescribe a process (a sequence of actions) to be performed to achieve a defined outcome. Work instructions may include Operational, Maintenance, Radiological, Quality, and Emergency as well as other functional area technical instructions and procedures.

5.0 REFERENCES

(1) DOE Order 422.1, Conduct of Operations

(2) HWMA/RCRA Permit

(3) INST-COPS-9.18.4, Hazard Assessment

(4) LST-COPS-01-IM, Conduct of Operations Implementation Matrix

(5) MP-COPS-9.14, Operations Procedures

(6) MP-COPS-9.17, Performing Pre-Job Briefing and Post-Job Reviews

(7) MP-COPS-9.33, Conduct of Operations Performing Independent Verifications

(8) MP-DOCS-18.2, Records Management

(9) MP-DOCS-18.4, Document Control

(10) MP-DOCS-18.8, Developing Analytical Chemistry Methods

(11) MP-DOCS-18.9, Developing Analytical Chemistry Laboratory Procedures

(12) MP-TRUW-8.2, Quality Assurance Project Plan

(13) PD-CMNT-01, Nuclear Maintenance Management Program Description

(14) QAPP-01, Quality Assurance Program Plan.

6.0 RECORDS

Records generated by this procedure are classified in accordance with the table below and dispositioned in accordance with MP-DOCS-18.2, Records Management.

Record Description	Classification
MP-DOCS-18.1, Case File	Nonpermanent WIPP/ENV1-J-1/ Destroy 10 years after submittal.

7.0 EXHIBITS

None

8.0 APPENDICES

Appendix A – FOI and OI Cover Sheet Format

Appendix B – List of Action Verbs

Appendix A–
FOI and OI Cover Sheet Format

XX-XXXX-XX.X, Rev. XX

Title of Procedure

(General Use)

Advanced Mixed Waste Treatment Project

Approval:

(Signature on file. See DCR-XXXXX.) TBD
Date

Verification of Effective Revision: (After verifying current revision, replace cover page on working copy if more space is needed.)

Initials	Date	Initials	Date	Initials	Date	Initials	Date

XX-XXXX-XX.X, Rev. XX

Title of Procedure

(Controlled Activity)

Advanced Mixed Waste Treatment Project

Approval:

(Signature on file. See DCR-XXXXX.)

TBD
Date

Verification of Effective Revision: (After verifying current revision, replace cover page on working copy if more space is needed.)

Initials	Date	Initials	Date	Initials	Date	Initials	Date

Appendix B – List of Action Verbs

The following list of verbs is not intended to be comprehensive. Verbs are selected from this list where possible so that words have a meaning common to all performers. Avoid using terms that do not provide specific instructions unless they are followed by specifying information. For example, "increase" used without qualification is almost meaningless, but "increase flow to maintain level above the inlet standpipe" provides the necessary information. Many of these verbs have similar meanings. Once a verb has been selected for a related series of action steps, it should be used consistently.

VERB	**DEFINITION (as used in Action Steps)**
Actuate	Place into a specific state of functional performance.
Add	Increase the size or quantity.
Adjust	Make an incremental change or series of changes to arrive at a desired condition.
Align	Arrange equipment into a specific configuration to permit a specific operation.
Allow	Permit the completion of a specific action.
Announce	To make known publicly.
Assemble	Put together what is required to provide an operational or functional capability.
Attach	To fasten one thing to another.
Balance	Adjust several parameters at the same time at certain points in a system to specified values.
Barricade	To shut in or keep out with an obstruction.
Begin	Start an action or activity.
Bleed	Remove fluid from a piece of equipment at a restricted flow rate.
Block	Inhibit a capability of a specific system or piece of equipment.
Bolt	To attach or fasten with bolts.

Bypass	To circumvent a safety circuit (unless a single device provides for bypassing, such as a bypass switch, identify specific actions to bypass).
Calculate	To determine by computation (computation method should also be identified).
Change	To make different in some particular.
Charge	To load or fill (specific actions to charge should be included).
Check	Perform a comparison with stated requirements. No manipulation of equipment by the checker is involved.
Circle	To draw a circle around.
Clean	To rid of dirt, impurities, or extraneous matter.
Clear	To move people and/or objects away from.
Close	Manipulate a device to allow the flow of electricity or to prevent the flow of fluids, other materials, or light.
Collect	Cause the assembly of something in a fixed location or container.
Compare	Determine the relationship of the characteristics or values of different items, parameters, or conditions.
Complete	Fulfill or accomplish an instruction totally.
Consult	To ask for advice, to take counsel; to refer to.
Connect	Join, fasten, or fit to permit a desired capability
Continue	Maintain or resume the performance of an activity or condition.
Cool	Lower the temperature of equipment or an environment
Coordinate	Arrange for activity involving other personnel.
Correct	Alter to reestablish a desired activity or condition.
Count	To add together.
Cover	Protect or shelter equipment.

Cycle	Cause repetition of an action or activity.
Declare	To make known formally.
Decrease	Produce a smaller value.
Deenergize	Remove the supply of electrical power to equipment.
Depress	Manipulate to effect a specific position of a device.
Depressurize	To release gas or fluid pressure from.
Determine	To find out; to ascertain.
Discharge	To give outlet or vent to a fluid or other contents.
Disconnect	Separate or detach.
Discontinue	To cease to operate, administer, use, produce, or take.
Dispose	Remove from a specific location.
Don	To put on an article of wear.
Drain	Remove liquid from an enclosure or part of an enclosure, usually to empty.
Draw	To bring, take or pull out, as from a receptacle.
Energize	Provide equipment with electrical power.
Ensure	Confirm that an activity or condition has occurred in conformance with specified requirements (by action if necessary).
Enter	To make report of, set foot in.
Equalize	To make equal or uniform.
Establish	Bring about. Take necessary actions to cause a specified set of conditions to exist.
Estimate	Approximate the size, extent, or nature of a variable.
Evacuate	Vacate.

Evaluate	To assess; to determine the importance, size, or nature of; to appraise; to give a value to based on collected data.
Exit	To leave or withdraw.
Expedite	To accelerate the process or progress of.
Fill	Add fluid to a system or equipment to a prescribed point.
Filter	Pass fluid through a sized medium to stop the passage of unwanted material in the effluent.
Flush	Remove or clean with a washing action of a liquid.
Follow	Comply with an instruction.
Go	To Depart from a position in a procedure and resume at a different location in the procedure or in a different procedure.
Ground	Provide an electrical path to a system at zero potential.
Guide	To manage or direct movement of.
Hold	Maintain a position for equipment, a place in a procedure, or an act of retention.
Identify	Determine or make known the parameter value or condition as related to a procedure.
Implement	To carry out; to accomplish.
Increase	Produce a larger value.
Indicate	Make known an activity, parameter value, or condition.
Inflate	To blow full with air or gas.
Inform	To communicate knowledge.
Initiate	To begin a process, usually involving several action steps or actions.
Inject	To introduce a new element; to drive a fluid.
Insert	Place or position into; move control rods into the reactor core.

Inspect	To examine; to perform a critical visual observation or check for specific conditions; to test the condition of.
Install	Fix or fit into equipment or a system.
Instruct	Direct or command.
Interchange	To substitute two items, one for another.
Investigate	To search or inquire into.
Isolate	To shut off or remove from service.
Jumper	To make a connection between two circuit points not normally connected.
Label	To mark or identify.
Latch	To close or fasten.
Lift	Elevate to a higher level or remove, as in removing electrical leads or restrictions.
Limit	Restrict or impose bounds.
Locate	Determine or establish place or position.
Lock	Securely fasten, to prevent capability to function.
Log	To enter into a record of operations or progress.
Lower	Cause to move down or decrease position or value.
Lubricate	To apply a lubricant to.
Maintain	To hold or keep in any particular state or condition, especially in a state of efficiency or validity.
Minimize	To reduce to the smallest amount or degree.
Mix	Intermingle ingredients uniformly.
Monitor	Observe an activity, parameter value, or condition (usually on a continuous basis) to meet an instruction requirement.

Notify	Contact, advise, or communicate to make someone aware of an impending or completed activity, parameter value, or condition.
Observe	To watch carefully.
Obtain	To get or attain.
Open	Manipulate a device to prevent the flow of electricity or to allow the flow of fluids, other materials, or light.
Operate	Cause equipment or system to perform designed functions.
Pass	To go by; move by.
Perform	Carry out specified actions or action steps.
Place	To put or set in a desired location or position.
Plot	To represent graphically.
Plug	To connect or become connected, as in electrical plug; to stop or insert something.
Press	To act upon through thrusting force exerted in contact; to push.
Pressurize	To apply pressure within by filling with gas or liquid.
Prevent	To keep from happening.
Proceed	To go on in an orderly, regulated way.
Pull	To exert force upon so as to cause or tend to cause motion toward the force.
Purge	To make free of unwanted substance such as an impurity or foreign material.
Push	To press against.
Pump	Move a fluid in a piping system by the use of suction, pressure, or both.
Rack in	Insert a circuit breaker into its operating position.
Rack out	Withdraw a circuit breaker into its nonoperating position.

Raise	Cause to move up, or increase position or value.
Read	Obtain information visually.
Recirculate	Cause repetitive motion of a fluid in a system.
Reduce	Decrease a variable to meet a procedure requirement.
Refer to	Use specified information that is in another location or procedure.
Release	To set free from restraint or confinement.
Remove	To take off, move away, or eliminate.
Repair	To restore to a sound state.
Repeat	Do again.
Replace	Install an equivalent part or component.
Request	Ask.
Reset	Reestablish a piece of equipment, part, or component to a previous condition, parameter value, instrument set point, or mechanical position.
Resume	To begin again after cessation or interruption.
Return to	To go back to a previous action step in the procedure in effect.
Review	Examine with deliberation for confirmation or compliance to an instruction.
Rotate	Cause to turn on an axis.
Sample	Take a representative portion for the purpose of examination.
Secure	Fasten or make safe.
Select	To take by preference of fitness from a number or group; to pick out; to choose.
Send	Dispatch.
Separate	Move apart or detach.

Set	Adjust equipment to a specified value.
Shake	To agitate.
Shut down	Remove from operational status.
Silence	To stop from making noise.
Sound	To order, signal, or indicate by a sound.
Stabilize	To become stable, firm, steady.
Start	Originate the motion or function of an electrical or mechanical device.
Station	To assign a person to stand and remain at a certain place.
Stop	To halt movement or progress; to hold back; to halt.
Store	To place in reserve, to hold for later use.
Stroke	Operate a valve over its full travel. The travel time may be measured.
Subtract	To perform a subtraction.
Tag	Identify with a prescribed label.
Throttle	Adjust a valve to an intermediate position to obtain a desired parameter value.
Torque	To cause to twist or turn, as about an axis.
Transfer	To cause to pass from one to another.
Transport	To transfer or convey from one place to another.
Trip	To manually activate a semiautomatic feature; to cause to fail or stop.
Turn	Adjust with a force on an actuator that positions form a circular movement.
Unlock	To unfasten the lock of.
Unplug	To remove from a socket or receptacle.
Update	To revise to include latest information or data.

Use	To avail oneself of; to employ; to utilize.
Vent	Release a gas or liquid confined under pressure.
Verify	Check if a parameter has assumed a specified value or to see if a specific action has been carried out. Verification checks for conformance with the criteria; it does not alter the status of equipment or the position of the component.
Walk	To move along on foot.
Weigh	To measure the heaviness of as by a scale.
Withdraw	To remove.
Work	To perform a task.

Records Management

Advanced Mixed Waste Treatment Project

Approval:

(Signature on file. See DCR-12214.)

05/23/13
Date

REVISION LOG

Revision Number	Date Approved	Pages Affected	Description of Revision
0	07/1/02	All	Initial issue. DCR-1089.
1	01/09/03	All	DCR-1676. Reflects process and editorial changes as a result of TrackWise™ Action Item #1549 & 1550.
2	02/21/03	8, 10, 17	DCR 2030. To incorporate text changes and references per CBFO document review. Update all CBFO QAPD references.
3	04/09/2003	All	DCR-2174. Process changes were required due to record keeping deficiencies identified during a WIPP Transportation Audit; the changes clarify record management requirements to ensure full compliance with CBFO 94 1012 *Quality Assurance Program Document*.
4	10/22/04	All	DCR-2861. Update definitions, storage requirements, and editorial corrections (i.e., formatting and style corrections).
5	2/13/06	All	DCR-4307. Reformat to MP format, total re-write of procedure for better flow of process and requirements identification.
6	06/28/06	Various	DCR-5095. Adequately and appropriately clarify WAP reference requirements within procedure. Editorial/formatting change for consistency to MP-DOCS-18.4, Form-1728, MP-DOCS-18.3.
7	08/23/2006	Pg. 9/Pg. 11	DCR-5257. Minor change to correct reference and fix grammar that had been changed in error during previous revision.
8	11/7/06	Various	DCR-5312. Revisions to incorporate 311 permit modification requirement changes, to update rolldown requirements, to incorporate changes to DOE/CBFO-94-1012, and to include some editorial/formatting changes.

Revision Number	Date Approved	Pages Affected	Description of Revision
9	6/28/07	Throughout	DCR-5867-2. Reorganized procedure to better portray process flow and improvements. Enhanced Vital Records and Special Processed/Electronic Records to implement DOE order requirements. Restructured and combined appendix tables to better capture designations and dispositions and removed references to SCI due to no longer using for long term storage.
10	7/9/07	Various	DCR-6205. Minor change to correct headers and erroneous Appendix C citation.
11	01/02/08	Various	DCR-6441. Revised and consolidated record types and implemented the WIPP HWFP modification. Clarified instructions for validating QA records. Also added examples of page numbering.
12	06/02/08	Various	DCR-7132. Revised roles and responsibilities for Records Custodian to strengthen the direction they are given and reorganized Section 3.3 to better capture process flow.
13	11/25/08	Appendix B	DCR-7650. Revised to differentiate Non-Permanent WIPP, Facility Operating Records, and those that fall into both categories. Various clarifications throughout.
14	09/13/11	Various	DCR-10355. Revised to incorporate Form-2034; to capture new record types; to create new record categorizations and disposition types for ACL Lab records; and various editorial changes as documented on the DCR.
15	09/12/12	Various	DCR-11544. Updated to incorporate ACL record retention and disposition. Incorporated DOCS-BLUESHEET-05 and ITG-BLUESHEET-120.
16	11/14/12	Pg. 14	DCR-11698. Deleted phrase in RMC definition: "The site RMC is located in WMF-678, the EDF/Training RMC is located in EDF Room 116."

Revision Number	Date Approved	Pages Affected	Description of Revision
17	05/23/13	Various	Deleted obsolete requirements. Moved DOE/CBFO reference to correct spot.

TABLE OF CONTENTS

1.0 PURPOSE/SCOPE 1

2.0 ROLES AND RESPONSIBILITIES 1

3.0 PROCEDURE 2

3.1 Records Management Program 2

3.2 Appointing Records Custodians 3

3.3 General Requirements 3

3.4 Records Storage 4

3.5 Record Validation and Verification 6

3.6 Indexing and Submittal 6

3.7 Record Corrections/Changes 8

3.8 Long Term QA Record Storage 9

3.9 Vital Records 10

3.10 Special Processed/Electronic Records 10

3.11 Records Retrieval 11

3.12 Records Destruction 12

3.13 Records Management Evaluation 13

4.0 DEFINITIONS 13

5.0 REFERENCES 15

6.0 RECORDS 16

7.0 EXHIBITS 16

8.0 APPENDICES 16

Appendix A - Examples of Typical QA Records A1

Appendix B - Record Categories, Classification, Disposition, and Retention Matrix B1

AMWTP MANAGEMENT PROCEDURE		
MP-DOCS-18.2, Rev. 17	Issued: 05/31/13	Effective: 06/01/13
Records Management		

1.0 PURPOSE/SCOPE

This procedure establishes the responsibilities, requirements, and processes for managing and storing records and Quality Assurance *(QA) records* (see def.) generated at the Advanced Mixed Waste Treatment Project (AMWTP). This procedure applies to all AMWTP personnel who engage in the record management process.

In addition to specific requirements cited, this entire document implements requirements from the Quality Assurance Program Plan (QAPP)-01, AMWTP Quality Assurance Program Plan; American Society of Mechanical Engineers (ASME) Nuclear Quality Assurance (NQA)-1 2008, Quality Assurance Requirements for Nuclear Facility Applications; U.S. Department of Energy (DOE) Order 243.1, Records Management Program; 36 Code of Federal Regulations (CFR) 1228, Disposition of Federal Records; and 10 CFR 71.1, Communications and Records.

2.0 ROLES AND RESPONSIBILITIES

Performer	Responsibilities
Records Officer (RO) and/or *Records Management Center* (RMC*;* see def.) Specialists	• Develops, coordinates, and directs the AMWTP records management program and procedures in accordance with applicable laws, regulations, and policies **(DOE/CBFO-94-1012)** • Provides expertise and consulting services to organizational *record custodian* (see def.) • Maintains and coordinates activities within AMWTP RMC.
Managers	• Ensures that records management requirements/processes are implemented by their respective organizations **(DOE/CBFO-94-1012)** • Appoints records custodians • Performs *validation* (see def.) of QA records or assigns employee (designee) to perform validations. **(DOE/CBFO-94-1012)**

Performer	Responsibilities
Record Custodian (RC)	• Receives, stores, indexes, and/or submits records. Serves as the resource person for the respective organization. • Consults with the RO when record requirements are unclear. • Establishes and maintains controls for temporary storage in *Satellite File Location* (SFLs; see def.). • Implements records management requirements and processes. • Submits completed records to the AMWTP RMC.
Quality Assurance (QA) Department	• Performs independent annual assessment to ensure adequacy of process and implementation.
Employees	• Provides reasonable protection for *in-process records* (see def.) • Submits completed records to their organizational RC • Validates records as assigned by management.

3.0 PROCEDURE

3.1 Records Management Program

3.1.1 RO: Establish a records management program that contains, at a minimum:

A. Procedures for the receipt and inspection of incoming records

B. Verification that QA records received are in agreement with the transmittal document

C. Instructions for legibility of records

D. Completed verifications via transmittal, receipt log entry, or equivalent process

E. Maintenance and processing of records at the RMCs

F. Method for submittal of completed records to the storage facility without unnecessary delay.

(DOE/CBFO-94-1012)

3.2 Appointing Records Custodians

3.2.1 Managers: Appoint RC(s) to coordinate and manage organizational records.

3.2.2 Send written notification (e-mail is sufficient) to the RO when an RC for a specific organization has been appointed.

(DOE/CBFO-94-1012)

3.2.3 RC: Complete required custodian training 0AWT1089, Records Custodian Training, as requested by the RO.

3.2.4 RCs: Obtain assistance from the RO with implementation of record management requirements.

(DOE/CBFO-94-1012)

3.2.5 RO: Update approved list of RCs.

3.2.5.1 Ensure list is available on the approved AMWTP home page (Electronic Document Management System [EDMS] records search page).

3.2.5.2 Coordinate with the training organization to ensure that all appointed RCs have been trained.

(QAPP-01)

3.3 General Requirements

3.3.1 RO/RCs: Organize and implement a system of controls for receipt and storage, which include, as a minimum:

A. Maintenance of in-process records at the SFL or with the record generators out in the field

B. Provisions to permit a current and accurate assessment of the status of QA records

C. Method(s) for identifying the records that have been received.

(DOE/CBFO-94-1012)

3.4 Records Storage

NOTE 1: *Records may be stored using an electronic format as long as the documents are readily available to obtain a printed hard copy.*

(AMWTP HWMA/RCRA Permit)

NOTE 2: *Documents that will become records are identified in the Records section of implementing procedures. Personnel may refer to Appendix A, Examples of Typical QA Records, and Appendix B, Record Categories, Classification, Disposition, and Retention Matrix (including whether a record is Waste Isolation Pilot Plant [WIPP]-related).*

3.4.1 All Employees: Provide reasonable protection for in-process records (such as for processing, review, or use) intended to become QA records from damage or loss until the records are submitted to the RC (including documents generated during field operations).

(DOE/CBFO-94-1012)

3.4.1.1 In-process records may be filed in metal cabinets under the following conditions:

- The record has not been validated as a QA record.
- The record can be *easily duplicated* (see def.) if damaged or lost.
- The record is stored in a metal cabinet located inside a building equipped with a fire sprinkler system.

3.4.2 Store QA records separately from non-QA records.

(DOE/CBFO-94-1012)

3.4.2.1 Submit all records to an RC when completed or no longer needed.

NOTE: *Due to sensitivity of the records, Security, Finance & Accounting, and Human Resources are exempt from the 18 months requirement.*

3.4.3 Managers: When a record is being stored in an electronic system (i.e., Maximo, Costpoint, Trackwise, eSOMS, Adept, Waste Tracking System [WTS], etc.) and is not scheduled to be submitted to Records Management, complete Form-2034, Electronic System Record Storage, Record Identification Form, and submit to Records Management.

3.4.4 RCs: If a record is needed for current business or regulatory purposes, temporarily store in SFLs until no longer needed, up to a maximum of 18 months.

(DOE/CBFO-94-1012)

3.4.4.1 Store inactive or completed QA records in a 1-hour fire rated container bearing a UL label (or equivalent) certifying 1-hour fire protection.

(DOE/CBFO-94-1012)

3.4.5 RMC Specialists/RCs: Establish and maintain controlled access to storage cabinets to prevent loss, damage, or unauthorized removal of records.

(DOE/CBFO-94-1012)

3.4.5.1 Post the list of authorized personnel who are permitted access to records.

3.4.5.2 Escort personnel whose names do not appear on the access authorization list while they are accessing and reviewing records.

NOTE: *Retrieving a record for a limited amount of time (e.g., to make a copy) does not require check-in/check-out if the record is immediately returned.*

3.4.5.3 Establish a check-in/check-out system for traceability of records removed from cabinets.

3.4.5.4 Establish an index of completed SFL stored records.

3.4.6 RCs: On a routine basis, submit *inactive records* (see def.) or completed records to an RMC per Sections 3.5 and 3.6.

3.5 Record Validation and Verification

NOTE 1: *Appendix A provides a listing of those types of records that are generally considered as QA records and should be used as a guide in making the determination.*

NOTE 2: *Transuranic Waste Characterization-required program QA Records are listed in Appendix B.*

NOTE 3: *Individual records are considered validated if stamped, initialed, or signed and dated by authorized personnel, or otherwise authenticated. If the nature of the record (such as magnetic tape, etc.) precludes stamping, initialing, or signing, other means of validation by knowledgeable personnel is allowed.*

(DOE/CBFO-94-1012)

NOTE 4: *Appendix A contains QA record and examples.*

3.5.1 All Employees: Before submitting any record to an RC, determine whether the record is a QA record.

3.5.1.1 If the record is a QA record, make sure it is validated before it is submitted to the RC.

3.5.1.2 Manager or Assigned Validator: Validate QA records in accordance with the instructions on Form-1044, Record Transmittal, and sign the form.

(DOE/CBFO-94-1012)

3.6 Indexing and Submittal

3.6.1 RCs: Remove all staples, paper clips, binder clips, file tabs, and sticky notes.

3.6.2 Separate records using colored paper or equivalent process when submitting more than one record and complete Page 2 of Form-1044.

NOTE: *If records are submitted in a scanned PDF format, the PDF software page numbering is sufficient.*

3.6.3 Number all pages of the record if submitted in hard copy form (e.g., 1 of 6 or 1/6).

3.6.4 Using Appendix B, categorize records as WIPP, Facility Operating Records (FOR), *vital records* (see def.), or Miscellaneous Other Records, and record on the Form-1044.

3.6.4.1 Classify WIPP QA Records as *lifetime* (see def.) or *nonpermanent* (see def.).

(DOE/CBFO-94-1012)

3.6.5 Enter information onto the paper or the electronic Form-1044.

3.6.6 Ensure the record is complete (i.e., all attachments, enclosures, and pages are included).

NOTE: *Rather than using e-mail, scanned electronic records may be placed in \\Amws0025\enterprise\Records Check-in followed up by a notification to the Records Management e-mail address.*

3.6.7 Transmit hardcopy or scanned electronic records (preferred), and completed Form-1044, to the RMC.

3.6.8 RMC Specialist: Verify receipt of the record and ensure the record identified matches the provided description.

(DOE/CBFO-94-1012)

3.6.9 Enter records received on Form-1044 into the *approved records management system* (see def.) or verify those already entered using the electronic Form-1044, as appropriate.

(DOE/CBFO-94-1012)

3.6.10 When processing the records, verify the correct categorization, classification, and disposition code are used on the Form-1044.

3.6.10.1 Ensure categorization, classification, and disposition is appropriately entered on the index and into the approved records management system.

(DOE/CBFO-94-1012)

3.6.11 Sign in the applicable area on Form-1044.

3.6.12 Store completed records in RMC or transfer to long term storage, per Section 3.8 as appropriate.

3.7 Record Corrections/Changes

NOTE 1: *This section applies to all in-process, inactive, and submitted records.*

NOTE 2: *Superseded records are considered corrections and are handled accordingly.*

3.7.1 All Employees: If correction or change to a record is required, ensure the correction(s) and/or change(s) are completed in the following manner:

3.7.1.1 Place a single line through the incorrect information, ensuring the prior entry remains legible, and initial and date.

(DOE/CBFO-94-1012)

3.7.1.2 If entire page is superseded, draw line from corner to corner, date and initial, and place new page in front.

NOTE: *The Training Department may use correspondence to indicate duplication of record.*

3.7.1.3 Stamp newly-generated record "Duplicate Original" if the original record is lost or destroyed.

(DOE/CBFO-94-1012)

3.7.1.4 Do not correct records with correction fluids or tapes.

(DOE/CBFO-94-1012)

3.7.2 If supplemental information needs to be appended to an existing record, retrieve record per Section 3.11 (if necessary) and add to original record.

3.7.2.1 Update any applicable indexes or record tracking systems.

3.8 Long Term QA Record Storage

NOTE: *This entire section is applicable ONLY to RMC specialists.*

3.8.1 Storage Facility

NOTE 1: *The AMWTP approved long-term storage facility is the Idaho National Laboratory (INL) Records Storage Facility (IRSF), which houses records for the entire INL.*

NOTE 2: *The IRSF has been reviewed and approved by competent personnel in the field of Fire Protection and QA to verify adequacy of protection of contents in order to meet* National Archives and Records Administration *(NARA; see def.) and ASME NQA-1 requirements.*

(DOE/CBFO-94-1012; DOE O 243.1)

3.8.1.1 When long-term storage is necessary, store and maintain AMWTP QA records at the IRSF records storage facility.

(DOE/CBFO-94-1012)

3.8.1.2 If the storage requirements above or in Section 3.4 cannot be met, then ensure duplicate records are created for *dual record storage* (see def.).

3.8.1.2.1 Dual store lifetime and nonpermanent WIPP records.

3.8.1.2.2 Store each record (the original and copy) at separate facilities that are sufficiently remote from each other to eliminate the chance of exposure to a simultaneous hazard.

3.8.1.2.3 When one of the separate storage methods is a scanned image, ensure the scanned image file is saved to a server that is backed up.

(DOE/CBFO-94-1012)

3.8.2 Box Accountability During Transit to Long-Term Storage

(DOE/CBFO-94-1012)

3.8.2.1 RMC Specialists: Generate a list of boxes ready for long-term storage and forward list to IRSF point-of-contact.

3.8.2.2 Delivery Personnel: Confirm possession of the boxes listed, by signature and date on the list, prior to leaving the RMC.

3.8.2.3 RMC Specialists: Instruct IRSF personnel to confirm receipt of boxes delivered and return confirmation of receipt by e-mail to the RMC.

3.8.2.4 When confirmation is received, then transmit electronic index(s) for the box shipment to IRSF for the storage facility's use in box inventory and tracking.

3.9 Vital Records

NOTE: *PLN-PAIT-003, Disaster Recovery Plan, describes and outlines the AMWTP disaster recovery plan for business continuity, which includes recovery of the electronic systems used for storing vital records.*

3.9.1 All Employees: Ensure that vital records (as identified in Appendix B) are compiled, maintained, updated, protected, and retrievable.

(DOE O 243.2)

3.10 Special Processed/Electronic Records

3.10.1 All Employees: Do not use electronic systems that are not regularly backed up and controlled (e.g., instant messaging) for conducting official business.

(DOE O 243.1)

3.10.2 Submit special processed records to the RMC to ensure adequate protection of special processed records to preclude damage from moisture, temperature, rodent infestation, excessive light, electromagnetic fields, or stacking, as appropriate for the type of record being stored. Special processed records include:

- Radiographs
- Photographs and negatives
- Microfilm
- Magnetic media.

(DOE/CBFO-94-1012)

3.10.3 RMC Specialists: Store and control records requiring special processing and control, such as software and related documentation or information on high-density media or optical disks, or hardware and software required to maintain and access records in fire rated cabinets in the RMC to ensure that the records are usable.

(DOE/CBFO-94-1012)

3.11 Records Retrieval

NOTE 1: *The approved records management system will provide for the accurate and efficient electronic retrieval of records without undue delay upon request.*

NOTE 2: *Retrieval of records generated prior to 2005, such as correspondence, transmittals, drawings, reports, calculations, etc., will require additional retrieval time.*

3.11.1 RCs: If an archived record needs to be retrieved, submit Form-1799, Records Request Form, or equivalent e-mail, to Records Management providing as much detail as possible to enable an adequate search.

3.11.2 RMC: Request the record from storage documenting box number, date, time, on Form-1799/equivalent.

3.11.3 RC: Sign for the record, providing paper trail of chain of custody.

3.11.4 RMC: Hold Form-1799/equivalent until records are returned to the RMC.

(DOE/CBFO-94-1012)

NOTE: *Employee emergency/weekend access for retrieval of records from IRSF may be obtained by making prior arrangements with the RO or designee.*

3.11.5 RMC Specialists: Coordinate with the long-term storage facility for retrieval of requested record.

3.11.5.1 If a copy is requested, provide a copy marked "information only" and return original to storage.

3.11.5.2 If the original is requested, check the record out to the requester.

3.11.5.3 RCs: When the record is no longer needed, return to the RMC to be placed back into storage.

3.12 Records Destruction

3.12.1 In cases of conflicting requirements concerning records retention or destruction, use the most stringent requirement to determine the final disposition.

(DOE/CBFO-94-1012)

3.12.2 RMC Specialists: Destroy QA records ONLY IF the following conditions are met:

- The appropriately assigned NARA-authorized disposition specifies destruction as depicted in Appendix B
- Regulatory requirements are satisfied
- Operational status permits the disposal of such records
- The related contractual requirements have been satisfied.

(DOE/CBFO-94-1012)

3.13 Records Management Evaluation

3.13.1 QA Department: Evaluate the records system at least annually to ensure that it is effective.

3.13.2 Document the evaluation ensuring the following as a minimum:

A. Indexed records are available and are in their proper location with the files

B. Control system is adequate

C. Storage areas are in good condition

D. Records and documents are not deteriorating due to improper storage practices or rough handling.

(DOE/CBFO-94-1012)

4.0 DEFINITIONS

Approved records management system. A networked, records database and indexing system that allows users to meet DOE's inventory requirements including record retention times, location of records, and the ability to retrieve records.

Disposition authority. A standardized alphanumeric code assigned by the DOE Idaho Operations Office utilizing NARA. The code indicates the final actions to be taken by the RMC regarding the filing, transferring, and storage of completed records.

Dual record storage. The act of storing duplicate copies of a record in separate facilities or containers that are located sufficiently remote from one another to eliminate the chance of exposure to a simultaneous hazard. Dual record storage is required when a single record storage facility is not available.

Easily duplicated. Ability to promptly recreate an incomplete, damaged, or lost record.

Inactive record. Record that is no longer necessary to conduct the current business of an office and can be archived.

In-process record. Record that is incomplete, in use, and necessary to conduct current business and not validated as a QA record. Validated QA records received at the RMC are considered in-process until they are fully processed for long-term storage.

Lifetime QA record. Quality records that would be of significant value in demonstrating capability for safe operation; maintaining, reworking, repairing, replacing, or modifying an item; determining the cause of an accident or malfunction of an item; and providing required baseline data for in-service inspection. Subject to being turned over to Carlsbad Field Office (CBFO) at the project's end.

(DOE/CBFO-94-1012)

National Archives and Records Administration. An independent agency that establishes policies and procedures for managing records of the federal government and exercises final authority for approving the disposition of government records.

Nonpermanent QA record. Records that do not meet the requirements for lifetime QA records, but provide objective evidence that the QA Program has been properly executed. Nonpermanent records have a value for a specific, limited time and, as authorized by the NARA disposition code, can be destroyed after that time. These records can be turned over to CBFO at project's end, or can be turned over to local DOE office.

QA record. A completed record or any authenticated portion of a record that provides objective evidence for the quality of items or activities. A QA record is a subset of records that require special controls. They may be original or reproducible copies, unless otherwise required, and shall be legible, accurate, and completed appropriate to the work accomplished. WIPP QA records are either classified as lifetime or nonpermanent (described separately within this section) and require validation.

(CBFO-94-1012)

Record custodian. Persons assigned to accept, accumulate, maintain, control, and temporarily store records for a given organization or functional area. Act as liaisons between the organization and the RMCs, and are responsible for submitting completed and inactive records to an RMC.

Records Management Center. A central location for the coordination of AMWTP records and records processing activities.

Satellite file location. Designated area in the field or organizational locations where in-process records are accumulated, maintained, controlled, and temporarily stored by designated RCs until transferred to an RMC.

Validate/Validation/Validated QA record. A certification as to the content of the record by those individuals with knowledge of the related facts, whether by direct personal knowledge or through the direct reports of others. Validation should not be confused with any subsequent reviews of the contents or an administrative check for completeness. Validated QA records are documents otherwise qualifying as records that have been stamped, initialed, or signed and dated by authorized personnel, or otherwise validated. Handwritten signatures are not required if the document is clearly identified as a statement by the reporting individual or organization.

Vital records. Emergency operating records and legal and financial rights records required during and after an emergency or as part of the recovery from a disaster.

5.0 REFERENCES

(1) 10 CFR 71.1, Communications and Records

(2) 36 CFR 1228, Disposition of Federal Records

(3) DOE/CBFO-94-1012, Quality Assurance Program Document

(4) DOE Order 243.1, Records Management Program

(5) DOE Order 243.2, Vital Records

(6) AMWTP HWMA/RCRA Permit

(7) ASME NQA-1 2008, Nuclear Standards Quality Assurance Requirements for Nuclear Facility Applications

(8) PLN-PAIT-003, Disaster Recovery Plan

(9) QAPP-01, AMWTP Quality Assurance Program Plan

(10) Waste Isolation Pilot Plant Hazardous Waste Facility Permit, Waste Analysis Plan, Attachment B, NM4890139088-TSDF, New Mexico Environment Department, Santa Fe, New Mexico.

6.0 RECORDS

Records generated by this procedure are classified in accordance with the table below and dispositioned in accordance with MP-DOCS-18.2, Records Management.

Record Description	Classification
MP-DOCS-18.2, Case File	Nonpermanent WIPP/ENV1-J-1/Destroy 10 years after submittal
Form-1044, Record Transmittal	Same as record(s) being transmitted
Form-1799, Records Request Form	Destroy when records are returned to the RMC
Form-2034, Electronic System Record Storage, Record Identification Form	Dependent on the system and records being stored within the system

7.0 EXHIBITS

None

8.0 APPENDICES

Appendix A – Examples of Typical QA Records

Appendix B – Record Categories, Classification, Disposition, and Retention Matrix

Appendix A - Examples of Typical QA Records

Designating every document as a quality assurance (*QA) record* (see def.) hinders storage and retrieval of useful information. To provide an effective QA Records Management Program, all departments shall review those documents generated and determine which documents furnish evidence of "quality" activities. Disposition of these records shall be in accordance with Appendix B. Examples of QA records could include, but are not limited to, the following:

Administrative Records

- Records that document organizational structures or charters in order to show sufficient evidence that level of responsibility and authority has been established and documented
- Acting manager notifications.

Quality Assurance

- QA plans, procedures, manuals, controlled documents
- Audit plans and reports
- Supplier evaluations
- Corrective Action Reports - nonconformance, cause analysis, corrective action plans, deficiency reports
- Surveillances, assessments, management assessments, evaluations.

Design/Commissioning Documents

- Design specification and amendments
- Approved design change requests
- Design deviations and nonconformances
- Design reports, drawings, criteria, calculations, and records of checks, procedures, system descriptions, processes, and instrumentation diagrams, equipment qualification/acceptance documentation
- Reports of engineering surveillance of field activities.

Preoperational and Startup Records

- Component checkout test reports
- Proof of pressure test reports
- System operation test reports
- Final system adjustment data
- Initial plant – loading data
- Start-up and test procedures and results
- In-service inspection reports
- Inspection, repair, and replacement of principal items of structure systems, and components
- Periodic checks, inspections, and calibrations performed to verify that surveillance requirements are being met.

Operation and Maintenance Records

- Measuring and test equipment records, calibration records, review records, out of tolerance evaluations, and deviation reports
- Maintenance and in-service inspection records
- Modification to controlled documents and work orders
- Training and qualification records, classroom, on-the-job, seminars, testing, and certifications
- Operating procedures
- Operating logs
- Calibration procedures and data
- Occurrence Reporting and Processing System Database.

Procurement Records

- Procurement specifications
- Purchase orders (unpriced) and amendments
- Procurement procedures
- Purchase's pre-award quality assurance surveys
- Supplier's quality assurance program manuals
- Source surveillance data plans
- Audit and surveillance reports
- Subcontracts
- Changes and modifications
- Receiving records
- Vendor data and supplier nonconformance reports.

Safety and Environmental Records

- Safety Analysis Reports
- Environmental monitoring documentation
- Log and summary of recordable, occupational injuries and illnesses
- Soil and ground water data
- Waste management and shipment burial data
- Data complied on unplanned spills or leaks
- Records of radioactive gaseous waste discharge to atmosphere and radioactive liquid waste discharge to surface or groundwater
- Radiation detection instrument calibration records
- Guides or procedures
- Safety management records
- Records pertaining to the operation of a hazardous waste treatment, storage, or disposal facility, including plans for inspection.

Appendix B -
Record Categories, Classification, Disposition, and Retention Matrix

QA records, as applicable, will be retained to the *disposition authority* (see def.) delineated in this appendix for the duration of the project, or until transferred to the Department of Energy (DOE).

(AMWTP QAPP)(DOE/CBFO-94-1012)

Records relevant to an enforcement action under the Waste Isolation Pilot Plant (WIPP) Hazardous Waste Permit, regardless of assigned disposition, will be maintained until the New Mexico Environment Department (NMED) determines that they are no longer needed for enforcement action.

(DOE/CBFO-94-1012)

NOTE 1: *When a record falls into more than one category and disposition, apply the most stringent classification and disposition.*

NOTE 2: *Lists may not be all inclusive but will provide guidance. Records that are not specifically listed will be analyzed by the Records Management Center (RMC) for appropriate category and classification.*

Record Category and Classification	Quality Assurance Designation / Information	Disposition / Retention Instructions
Lifetime WIPP Records • Field Sampling Data Forms • Field and Laboratory Chain of Custody Forms • Test Facility and Laboratory Batch Data Reports • Waste Stream Characterization Package • Sampling plans • Data Reduction, Validation, and Reporting documentation • Acceptable Knowledge documentation • Waste Stream Profile Form • Characterization Information Summaries (Certified Drum Files) • Data Management System (DMS)/Waste Tracking System (WTS) data • Correspondence related to any of the above.	**QA**	**ENV1-J-1** When complete, submit to RMC. Retain for **life of the project plus 6 years** or transfer to the WIPP Records Archive Facility at end of project/program. **(DOE/CBFO-94-1012)**

Record Category and Classification	Quality Assurance Designation / Information	Disposition / Retention Instructions
Nonpermanent WIPP Records • Gas canister tags • Methods Performance / Demonstration Program documentation • Sampling Equipment Certifications • Calculations and related Software Change Control (WIPP-related systems) • Analytical raw data • Procurement documentation, including vendor data (WIPP-related) and vendor acceptance test plans • Approved vendor list • WIPP-related procedures (all revs) • Audio/Video recordings (Real-time Radioscopy [RTR], Visual Examination [VE], etc.) • Correspondence related to any of the above.	**QA** Projects shall retain QA records for a minimum of 10 years from the date of record generation. If the site ceases to operate, records shall be transferred before site closure. **(DOE/CBFO-94-1012)** Records, usually in the form of completed forms, contain information specific to owner/operator of hazardous waste sites, which must be recorded, as it becomes available. These records document an activity, product, or service that has a positive or negative impact to the air, water, land, natural resources, vegetation, wildlife, or surrounding population. The generator shall maintain records for time periods equivalent to onsite records retention requirements, but not less than 3 years (or for time periods designated by other regulatory authorities). **(NTS WAC)**	**ENV1-J-1** Submit to RMC for long term storage. Destroy 10 years after submittal or transfer to the WIPP Records Archive Facility at end of project/program.
(Both) Facility Operating Records (FOR) / Nonpermanent WIPP Records • Nonconformance Documentation • QA Assessments and Surveillances • Corrective Action (CA)/Trackwise, Audit, Investigation, DOE Health, Safety, and Security, Office of Enforcement (HSS-OE, and Root Cause Analysis Documentation (includes Occurrence Reporting and Processing System [ORPS]) Fact Findings and Nonconformance Reports (NCRs) • Employee Training/Qualification Records, Classroom, On-the-Job, Testing, Certifications, and Rosters • Quality Assurance Project Plan (QAPjP) (all revisions) • Measuring and Test Equipment (M&TE) calibration, Out of Tolerance, and Deviation reports • Technical implementing procedures (all revs) • Correspondence related to any of the above.		**ENV2-a-1-a** Submit to RMC for long-term storage. Destroy 5 years after **LIFE of FACILITY** or transfer to WIPP Records Archive Facility or DOE Idaho Operations Office (ID) Records Storage Facility, as appropriate, at end of project/program.

Record Category and Classification	Quality Assurance Designation / Information	Disposition / Retention Instructions
Facility Operating Records (FOR) /RCRA • All (transuranic [TRU], mixed low-level waste [MLLW], low-level waste [LLW] Offsite) Waste Receipt & Shipping Records • Department of Transportation (DOT) related records • Standard Waste Box (SWB) Direct Load Packages • RadCon and environment sample and Chain of Custody records • Maintenance/In-Service Inspections and Work Orders • Operating Logs (retained in Electronic Shift Operations Management System [eSOMS]) and Round Sheets • Resource Conservation and Recovery Act (RCRA) inspection records and schedules • Environmental determinations/Hazardous waste determinations • Operational Readiness Review (ORR), Readiness Assessment (RA), Management Self Assessment (MSA), and Start-up Implementation documentation, notification, and objective evidence • Authorization Basis (Documented Safety Analysis [DSA] and permit) implementation documentation/Operational emergency (OE) • Unreviewed Safety Question (USQ) screens/determinations • Engineering documentation (As-Built Drawings, Engineering Design Files (EDFs), Facility Modification Proposal (FMPs), etc.) • Security Visitor Traffic Logs • Completed Emergency/Contingency/Spill Response documentation • All Permit documentation (includes modifications and applications) • Waste minimization documentation, including Shipment/Disposal Records (e.g., used oil) • High-efficiency particulate air (HEPA) filter documentation and reports • Toxic Substance Control Act (TSCA)/polychlorinated biphenyl (PCB) documentation • Material Safety Data Sheets (MSDSs) still in use (vital record) • Correspondence related to any of the above. **Analytical Chemistry Laboratory Facility Operating Records, including** • Facility (Less Than Hazard Category 3 [LTHC3]) radionuclide inventory forms • Facility radionuclide inventory tracking logbook • Facility radionuclide inventory verifications • WMF-TR-14 facility daily round sheets • ACL briefing checklists • Time-sensitive chemical inspections	**QA** Records in the form of completed forms (usually) that contain information specific to owner/operator of hazardous waste sites that must be recorded, as it becomes available. These records document an activity, product, or service that has a positive or negative impact to the air, water, land, natural resources, vegetation, wildlife or surrounding population. **(MP-EC&P-7.17)** The generator shall maintain records for time periods equivalent to onsite records retention requirements, but not less than 3 years (or for time periods designated by other regulatory authorities). **(NTS WAC)**	**ENV2-a-1-a** Submit to RMC for long term storage. Destroy 5 years after **LIFE of FACILITY.**

Record Category and Classification	Quality Assurance Designation / Information	Disposition / Retention Instructions
Vital Records • Emergency plans and procedures (EDMS Documents) • Orders of succession (EDMS Records) • Delegations of authority (EDMS Records) • Corporate payroll, finance, and budget information (Costpoint and Deltek) • Personnel (Human Resources) and Benefits information (Costpoint) • Contracts and agreements (Maximo, EDMS Documents) • Legal and financial rights information • Obligations that impose financial risk (Maximo) • Documentation for electronic systems that manage above records (EDMS Documents)	The record designation is dependent on the actual record. Refer to the other categories and/or Appendix A to determine if a QA record. Vital records are emergency operating records that may be required during and after an emergency or as part of the recovery from a disaster. These records must be available as needed at or in the vicinity of emergency operating centers. Most AMWTP Vital records are within electronic systems as noted. **(DOE Order 243.2)**	Disposition is dependent on the actual record. Refer to one of the other categories for the disposition code and retention instructions.

Record Category and Classification	Quality Assurance Designation / Information	Disposition / Retention Instructions
Misc. Other Records The QA record designation for this entire category is dependent on the actual record. Using Appendix A as a guide, these records may or may not be QA records. * Denotes contractor-owned records.		
Employee/Personnel Files (From initial date of employment to date of separation) (SENSITIVE Vital Records) • Medical (includes fit tests, audio tests, drug screens, etc.) * • Human Resources * • Security • Union Grievance and Arbitration * • Correspondence related to any of the above		**A1-1.1** Cut off at time of separation Destroy 75 years after separation (if Security) or turned over to outgoing contractor during contract transition/project end.
Records that relate to organization, staffing, procedures, and communications • General e-mail correspondence not retained as with other disposition codes • Meeting minutes documenting routine activities • Administrative reports relating to routine, daily business functions, recurring transactions, or activities • Required employee communications, including routing slips and sign-off sheets used by management to communicate important information • Organizational Delegations of Authority (Vital Record) • Office Systems Services Records related to service of telephone, pager, fax, and copy machine • Operations Operator Aids and Aid Log/Index • Timely Orders/Short Term Instructions/Temporary Physical Change Records • MSDS's (No Longer Used) • Checklists used to ensure/document completion of work activities • Correspondence related to any of the above		**A23-1-a** Submit to RMC Destroy 2 years after no longer needed.
Physical Security Records • PSO Monthly Report • Alarm Operability Checklist • Security daily key issue log and Alarm Station Logs • Camera Guides and Passes • Key Receipt, Lost Reports, and Accountability Logs		**A18-1.1-a** Submit to RMC when no longer needed. Destroy 4 years after submittal.

Record Category and Classification	Quality Assurance Designation / Information	Disposition / Retention Instructions
Administrative/non-Operational document case files • Objective evidence demonstrating implementation of management improvement programs with a focus on streamlining operations, providing cost effectiveness, improving customer satisfaction, and continuing improvement of work processes or products, e.g., Six-Sigma or Cost Savings Initiatives, ISMS, ISO14001, Voluntary Protection Program (VPP) • Lessons Learned case files • Training/Course Materials (superseded) • Ergonomic Assessments and Building Ergonomic Walkdowns • Business system change control (excludes software change packages for WIPP-related systems) • Systems/Network Access Requests • Container Movement Forms (internal to the AMWTP) • Pre-and Post-Job Reviews • Tailgate and Required Reading rosters • Drill guides/scenarios (superseded) • Budget records; supplies and office services and equipment requests and receipts; and the use of office space and utilities (Vital Records) • Information used to track organization budget expenditures • Payroll and Time/Attendance records (Vital Record) • Media clearing and sanitizing records • Property Management—managing, tracking, controlling, and excess or sale of government furnished property (capital and noncapital (includes application for licensing and license, equipment history files for utilization of property items, manufacturer's statement of origin, equipment repair estimates, repair orders and billings, inspection reports, and move orders) • Correspondence related to any of the above		**A16-1.2** Submit to RMC when complete, superseded, or obsolete. Destroy 5 years after submittal.

Record Category and Classification	Quality Assurance Designation / Information	Disposition / Retention Instructions
Analytical Chemistry Laboratory (ACL) Records • Laboratory quality trend reports • Staff signature lists • Analytical M&TE out-of-tolerance notifications • Analytical software QA change/verification documentation • Chemical standard and reagent preparation records • Vendor chemical standard certificates of analysis/certificates of calibration • Instrument calibration and calibration verification data • Instrument quality control data • Control charts for analytical QC parameters • Performance evaluation program reports and data • Raw analytical data • Laboratory copies of analytical test reports • Analytical logbooks • Instrument quality control data • Method performance demonstration data • Analyst performance demonstration data • Sample management/custody/disposition records • Instrument/equipment maintenance records		**ENV5-d** Submit to RMC when complete, superseded, or obsolete. Destroy 10 years after submittal.
• Prime Contracts Information and associated files consisting of negotiated, signed contract(s) with the DOE and their contractors. Related documentation includes, but is not strictly limited to, background records, records depicting work scope, benefits, correspondence, cost/pricing, incentive fee provisions, regulatory compliance policies, and other contractual agreements; modifications; provisions; clauses; articles; and other such correlated documentation, e.g., Records generated by or in behalf of organizations or contractors documenting requests to and responses from DOE resulting in exemptions, waivers, or deviations from the parameters set forth by DOE. • All agreements between the Department and other signatory authorities. Agreements executed by DOE, contractor and the requesting Federal, State, local, tribal, domestic, or private organizations. Agreements stipulate contract length, provisions, articles, clauses, and other related matters. Files include subcontract agreements signed between contractor and subcontractors to perform a specific work scope in support of the larger contract. • Labor Management/Union related records agreements. • Correspondence related to any of the above		**N1-434-95-5-a-1** Submit to RMC when no longer needed. Destroy 10 years after contract termination.
• Non-WIPP related procurement files including contract, statement of work, requisitions, purchase orders, lease, bond, surety records, and related correspondence and papers pertaining to award administration, receipt, receiving acceptance inspection for payment for equipment, services, and acquisition of property **> $100,000 and construction contracts exceeding $2,000,000**. • Finance & Accounting/Travel Authorization Records (Vital) regardless of dollar value		**A3-3-a-1-a** Submit to RMC after final payment, Destroy 6 years and 3 months after final payment.

Record Category and Classification	Quality Assurance Designation / Information	Disposition / Retention Instructions
• Non-WIPP related procurement and P-Card files including contract, statement of work, requisitions, purchase orders, lease, bond, surety records, and related correspondence and papers pertaining to award administration, receipt, receiving acceptance inspection for payment for equipment, services, and acquisition of property **< $100,000 and construction contracts below $2,000,000**		**A3-3-a-1-b** Submit to RMC after final payment. Destroy 3 years after final payment.
• Request for proposal (RFP)/Purchase Orders/Subcontract **FOR QUALITY SIGNIFICANT PROCUREMENTS** - Facility/equipment procurement packages exceeding $100,000 and construction exceeding $2,000, 000. Vendor trip reports/review meeting minutes, bid package/abstract evaluation, design review package/comments/resolutions for quality systems, structures, and components		**A18-35-b** Submit to RMC after final payment. Destroy upon permanent removal of item from service or upon permanent termination of items use, unless the document will be applicable to a replacement item.
• Corporate-specific records (not related to DOE Contract Scope of Work) * • Unallowable financial records * • Legal records and litigation files * • Employee Human Resource files • Corporate-specific correspondence *		**Flagged in EDMS** Retain in RMC until contract end; then turn over to the outgoing contractor during transition.

Developing Management Procedures

Advanced Mixed Waste Treatment Project

Approval:

(*Signature on file. See DCR-11805.*) 11/14/12

REVISION LOG

Revision Number	Date Approved	Pages Affected	Description of Revision
0	12/4/2001	All	Initial issue. DCR-2001-1067
1	6/23/2003	Page 1 & 3	DCR-2292, Change to incorporate recommendations from CBFO resulting from the WIPP Program Evaluation to 1) indicate that this document rolls down and implements requirements from the DOE CBFO QADP (CBFO-94-1012) as required by MP-DOCS-18.3 and 2) that work instructions are to be reviewed and approved in accordance with MP-DOCS-18.4
2	6/30/05	All	DCR-4396. Minor changes to apply Blue Sheet (DCR-4299) changes and to re-order sections for greater ease of use.
3	09/18/06	1.0	DCR-5355. Minor change to exempt Implementation Matrices from this format standard.
4	12/11/06	All	DCR-5528. Revised to clarify use of page numbering in appendices per AI 24076 and to rewrite requirements as steps. Added more information to Appendix A.
5	03/19/07	Global	DCR-5654. Remove “General Use” from cover sheet and header of Document, the requirement from MP-COPS-9.14 only applies to instructional documents. In Section 1 add exclusion for TRU documents.
6	03/20/08	Page 1, 8, 10, & A1	DCR-6803. Revised to support transportation transition to CCP and clarity.
7	10/15/09	Cover, 3.2.5.1, 3.2.10 Appendix A	DCR-8664. Revised to remove periodic review date from cover and clarify rolls/responsibilities, exhibits, and remove period review date from cover page example in Appendix A.

AMWTP MANAGEMENT PROCEDURE		
MP-DOCS-18.3, Rev. 8	Issued: 11/15/14	Effective: 11/16/12
Developing Management Procedures		

Revision Number	Date Approved	Pages Affected	Description of Revision
8	11/14/12	Cover page, Section 3.2, and 3.3	DCR-11805. Incorporated DOCS-BLUESHEET-09 and ITG-BLUESHEET-120; updated the cover page to remove document owner for process improvement. Changes in Section 3.2 and 3.3 for periodic review.

TABLE OF CONTENTS

1.0 PURPOSE/SCOPE 1

2.0 ROLES AND RESPONSIBILITIES 2

3.0 PROCEDURE 2

3.1 Management Procedures Guidelines 2

3.2 Management Procedure Format 2

3.2.1 Cover Sheet 2
3.2.2 Revision Log 3
3.2.3 Table of Contents 3
3.2.4 Purpose/Scope 3
3.2.5 Roles and Responsibilities 4
3.2.6 Procedure 4
3.2.7 Definitions 4
3.2.8 References 5
3.2.9 Records 5
3.2.10 Exhibits 6
3.2.11 Appendices 6

3.3 Writing Procedure or Requirement Steps 7

3.4 Writing Procedural Notes 8

3.5 Identifying Requirements 9

4.0 DEFINITIONS 9

5.0 REFERENCES 10

6.0 RECORDS 11

7.0 EXHIBITS 11

8.0 APPENDICES 11

Appendix A - Management Procedure Cover Sheet Format A1

AMWTP MANAGEMENT PROCEDURE		
MP-DOCS-18.3, Rev. 8	Issued: 11/15/14	Effective: 11/16/12
Developing Management Procedures		

1.0 PURPOSE/SCOPE

This procedure implements the requirements of QAPP-01, AMWTP Quality Assurance Program Plan, and the Department of Energy (DOE)/Carlsbad Field Office (CBFO) Quality Assurance Program Document (QAPD) which dictate the development of implementing procedures or other appropriate documentation for use during operation of the Advanced Mixed Waste Treatment Project (AMWTP). This procedure provides a standardized process for the development of accurate, complete, and usable management procedures (MPs) for the operation of the AMWTP. This document, in whole, implements the specific requirements of the CBFO QAPD.

This procedure is designed to assist writers, reviewers, administrators, subject matter experts, support personnel, and users involved in developing, writing, and using MPs by providing specific *format* (see def.) standards. It applies to all new MPs developed for use by the AMWTP and all pre-existing MPs as they are revised. This format standard does not apply to implementation matrices (IMs) previously designated as MPs and the following TRU Programs documents which must be formatted per CBFO guidelines:

- MP-TRUW-8.1, Certification Plan for INL Transuranic Waste
- MP-TRUW-8.2, Quality Assurance Project Plan.

Management procedures establish methods for implementing and integrating requirements, specifying roles and responsibilities for performance, as well as providing a standard for conducting business. An MP may be appropriate when describing programmatic execution of *roll down requirements* (see def.) from laws, regulations, DOE orders or standards, company objectives, and facility policies. Work instructions, on the other hand, provide specific direction for operating and maintaining systems and equipment to ensure the facility is maintained within its design basis and to support safe and reliable operation of the facility while ensuring environmental, safety, health, and quality compliance. (See MP-DOCS-18.1, Developing Written Work Instructions.)

Management procedures should assist users by presenting administrative and programmatic requirements clearly, concisely, and in proper sequence. This procedure provides a method for authors to ensure that procedures contribute to safe and efficient operations at the AMWTP.

Because MPs present administrative and programmatic requirements, rather than directing or authorizing work on systems or equipment, they should not need to contain precautions, cautions, or warnings.

2.0 ROLES AND RESPONSIBILITIES

Performer	Responsibilities
All Personnel	Develop, write, and use management procedures formatted to this standard.

3.0 PROCEDURE

3.1 Management Procedures Guidelines

3.1.1 Responsible Managers: Ensure that all new and revised MPs are reviewed and approved in accordance with the requirements of MP-DOCS-18.4, Document Control.

3.1.2 Ensure that the scope and applicability of individual MPs are readily apparent.

3.1.3 Define any unusual or unfamiliar terms that are used in an MP.

3.2 Management Procedure Format

NOTE: *The format for MPs to be prepared in accordance with this procedure is described below. Electronic templates available from Document Services may be used to ensure consistency with these format requirements.*

3.2.1 Cover Sheet

NOTE: *The* cover sheet *(see def.) is the first page of the procedure. It provides a means for the user to verify that the procedure is appropriate for the task at hand and that the procedure is approved.*

3.2.1.1 On the cover sheet, include a simple descriptive title that identifies the process or activity described in the procedure.

NOTE: *Periodic review dates are tracked in EDMS per MP-DOCS-18.4. As procedures are revised, the periodic review date will be removed from the coversheet.*

(DOE O 422.1)

3.2.1.2 Format the cover sheet in accordance with the guidelines shown in Appendix A, Management Procedure Cover Sheet Format.

3.2.2 Revision Log

NOTE: *The* revision log *(see def.) identifies the most current revision to the procedure, including the effective date of approval of the revision.*

3.2.2.1 Include a revision log in each MP.

3.2.2.2 Place the revision log on a separate page, or pages, located at the front of the procedure immediately following the cover sheet.

3.2.3 Table of Contents

3.2.3.1 Include a *table of contents* (see def.) with each procedure.

3.2.3.2 Within the table of contents, list the procedure section and sub-section *headings* (see def.) and the titles of appendices exactly as they appear in the procedure.

3.2.3.3 Identify at the right margin the number of the page on which the heading or title first appears.

3.2.3.4 Place the table of contents on a separate page (or pages) immediately following the revision log.

3.2.4 Purpose/Scope

3.2.4.1 Place the purpose and scope of the procedure, including the applicability of the procedure, in the first section of the procedure on the first page immediately following the table of contents.

3.2.4.2 Make the purpose and scope as specific as necessary and provide sufficient detail so that anyone using it may understand the purpose and applicability of the procedure.

3.2.4.3 Number the purpose and scope section as major Section 1.0.

3.2.5 Roles and Responsibilities

3.2.5.1 The roles and responsibilities shall be in table format and shall summarize the responsibilities of all individuals (by job title) who perform actions within the procedure.

3.2.5.2 Number the roles and responsibilities section as major Section 2.0.

3.2.6 Procedure

3.2.6.1 In the procedure section, identify the requirements or steps to be followed by using sub-sections, including where appropriate, the person or organization assigned responsibility for those requirements.

3.2.6.2 In the procedure sub-sections, include the actions and requirements that prescribe the principal tasks and subtasks of the procedure.

3.2.6.2.1 Organize sub-section activities in the order that they will be performed.

3.2.6.3 Make the procedure section specific in context. Include appropriate reporting requirements if required for ensuring that important activities have been satisfactorily accomplished.

3.2.6.4 Do not include cautions or warnings in an MP.

3.2.6.5 Number the procedure section as major Section 3.0.

3.2.7 Definitions

3.2.7.1 In the definitions section, define words and phrases having a special meaning or application within the procedure.

3.2.7.2 List definitions in the same format as in this procedure.

3.2.7.3 Number the Definitions section as major Section 4.0.

3.2.7.4 If there are no definitions applicable to the procedure, write "None."

3.2.8 References

NOTE: *References are to include the title when first called out; thereafter, only the reference number needs to be used.*

3.2.8.1 In the References section, identify only documents or procedures that interface with and are discussed within the procedure.

3.2.8.2 Include the document number and complete title of all references. If a specific revision level must be followed, include the required revision level with the reference.

3.2.8.3 List references in the same format as in this procedure.

3.2.8.4 Number the References section as major Section 5.0.

3.2.9 Records

NOTE 1: *Additional information on record categories, classification, disposition, and retention can be found in MP-DOCS-18.2, Records Management.*

NOTE 2: *All identified, completed records are to be submitted to Records Management via approved record custodians.*

3.2.9.1 In the Records section, identify the specific documents that are generated by implementation or execution of the MP. Include a statement as applicable to identify those documents that will be considered completed QA records and how they should be categorized and dispositioned.

3.2.9.2 Number the Records section as major Section 6.0.

3.2.10 Exhibits

NOTE: Exhibits *(see def.) may include maps, information tags, etc. Exhibits may appear at any point in a procedure; this section is a only a list, by title, of the aggregate exhibits used in the procedure.*

3.2.10.1 In the Exhibits section, list the exhibits that are included with the procedure.

3.2.10.2 Format the list of exhibits the same as in this procedure.

3.2.10.3 Number the Exhibits section as major Section 7.0.

3.2.10.4 If there are no exhibits associated with the procedure, write "None."

3.2.11 Appendices

3.2.11.1 List the *appendices* (see def.) applicable to the instruction.

3.2.11.2 Provide an appendix when the material and function of the procedure require it.

3.2.11.3 Identify appendices with capital letters (Appendix A, Appendix B, etc.).

3.2.11.4 Number the pages of an appendix with the letter identifying the appendix, the page number within the appendix, and the total number of pages within the appendix (for example, "A1 of A6") to ensure all pages are available if the appendix is detached from the main body of the procedure.

3.2.11.5 Reference appendices within the text of the procedure.

3.2.11.6 Format the list of appendices the same as in this procedure.

3.2.11.7 Number the Appendices section as major Section 8.0.

3.2.11.8 If there are no appendices associated with the procedure, write "None."

NOTE: *Electronic templates are available from Document Services for assisting in meeting page-formatting requirements.*

3.2.12 Lay out the individual pages of MPs consistent with the layout used in this document. Specifically, format headers and footers, page numbering, and page margins as they are formatted in this document.

3.2.13 Only reference the forms associated with an MP, since forms are controlled as individual controlled documents and are not included as a part of an MP.

3.3 Writing Procedure or Requirement Steps

NOTE 1: *Steps in MPs at AMWTP have historically been written in two ways: some are written as action steps or commands and others are written as requirements or "shall" statements. Although both ways are acceptable, action steps (the method used in this procedure) are more direct and are preferred. The method selected for a particular procedure should be used consistently throughout the document.*

NOTE 2: *Acronyms are called out the first time of use.*

3.3.1 Select the simplest most direct terminology to convey the correct meaning.

3.3.2 Use consistent and correct terminology, grammar, and punctuation.

3.3.3 Organize steps in order of performance unless otherwise stated, and place any necessary preparatory steps directly before the step that requires the preparatory action.

3.3.4 Use emphasis techniques (for example, bold, italics, or underlining) to highlight important information, with the following constraints: (a) do not use all capital letters for blocks of text, (b) do not capitalize the first letter of any words unless they are formal, proper nouns in accordance with standard American English usage or they are the first word of a sentence, and (c) avoid the overuse of multiple emphasis techniques.

NOTE: *Horizontal bars are shown above and below examples in this procedure to distinguish between the procedural text and examples of proper formatting. They are not used in MPs to highlight notes or other items.*

3.4 Writing Procedural Notes

NOTE: Notes *(see def.) call attention to important supplemental information. Notes should be used to assist the user in making decisions or improving task performance. The information can be a reminder of preparatory information needed to perform the activities of a procedure or an action step.*

3.4.1 Position notes so they are complete on one page and appear immediately before and on the same page as the procedural step(s) to which they apply.

3.4.2 Format notes as shown in Example 3-1 below.

Example 3-1: Identification of a Note

NOTE: *Safety Significant SSC, as used in this procedure, distinguishes a specific category.*

3.4.3 Write notes as short, concise statements rather than as commands to distinguish them from action steps.

3.4.4 Use italics for the body of the note and use bold capitals for the word **NOTE**.

3.4.5 Include only one topic in each note.

3.4.6 If more than one note appears before the same step, number the notes as **NOTE 1**, **NOTE 2**, etc.

3.5 Identifying Requirements

NOTE: *Some steps in procedures will be required as a roll-down from an external requirement such as:*

- *RCRA Permit*
- *Quality Assurance Plan*
- *WIPP Requirements*
- *Documented Safety Analysis*
- *DOE Orders*
- *Contractual Requirements.*

3.5.1 Identify steps rolled down from an external requirement.

NOTE: *If the same rolled down requirement applies to an entire procedure (ex. DOE O 422.1), it can be so stated in the scope and purpose section without being reiterated for each step.*

3.5.2 Place the reference to the requirement in parentheses and bold letters, directly below the step to which it applies and right margin justified.

3.5.3 Use the format illustrated in Example 3-2.

Example 3-2: Identification of a Roll-Down Requirement

3.7.2 If the DOE-ID Facility Representative or the DOE Program Manager reject the final report, prepare and submit a revised final report within 21 calendar days.

(DOE Order 232.1)

4.0 DEFINITIONS

Appendix. Supplementary material placed at the end of a procedure. Appendices include information more conveniently located after the main body of a procedure including forms, tables, figures, and graphs.

Cover Sheet. The first page of the procedure, which includes, as a minimum, the procedure title and page header.

Exhibit. Representations of forms, maps, information tags, etc, that are included throughout the procedure for clarification or example.

Format. A plan or layout for the organization of pages in a document, including the size, style, typeface, margins, etc.

Headings. Words or short phrases that introduce a section.

Note. Notes provide important supplemental information to users. This information is explanatory, and contains no action or command.

Referencing/references. Referencing instructions direct the users to temporarily abandon their place in the base procedure in order to perform action steps elsewhere in that procedure or in another procedure. When executing a reference, users always return to the base procedure action step after performing the referenced action step(s).

Revision Log. The revision log identifies the revision history of the procedure and its effective date.

Roll Down Requirement. A requirement that originates from a higher-tier document such as a DOE order, federal requirement, etc., that is implemented by a lower-tier procedure or instruction.

Table of contents. A listing of sections, sub-sections, and appendices that helps in locating those portions of the procedure.

5.0 REFERENCES

(1) DOE O 422.1, Conduct of Operations

(2) DOE/CBFO-94-1012, Quality Assurance Program Document (QAPD)

(3) MP-DOCS-18.1, Developing Written Work Instructions

(4) MP-DOCS-18.2, Records Management

(5) MP-DOCS-18.4, Document Control

(6) MP-TRUW-8.1, Certification Plan for INL Transuranic Waste

(7) MP-TRUW-8.2, Quality Assurance Project Plan

(8) QAPP-01, Quality Assurance Program Plan

6.0 RECORDS

Records generated by this procedure are classified in accordance with the table below and dispositioned in accordance with MP-DOCS-18.2, Records Management.

Record Description	Classification
MP-DOCS-18.3, Case File	Nonpermanent WIPP/ENV1-J-1/Destroy 10 years after submittal

7.0 EXHIBITS

None

8.0 APPENDICES

Appendix A – Management Procedure Cover Sheet Format

Appendix A -
Management Procedure Cover Sheet Format

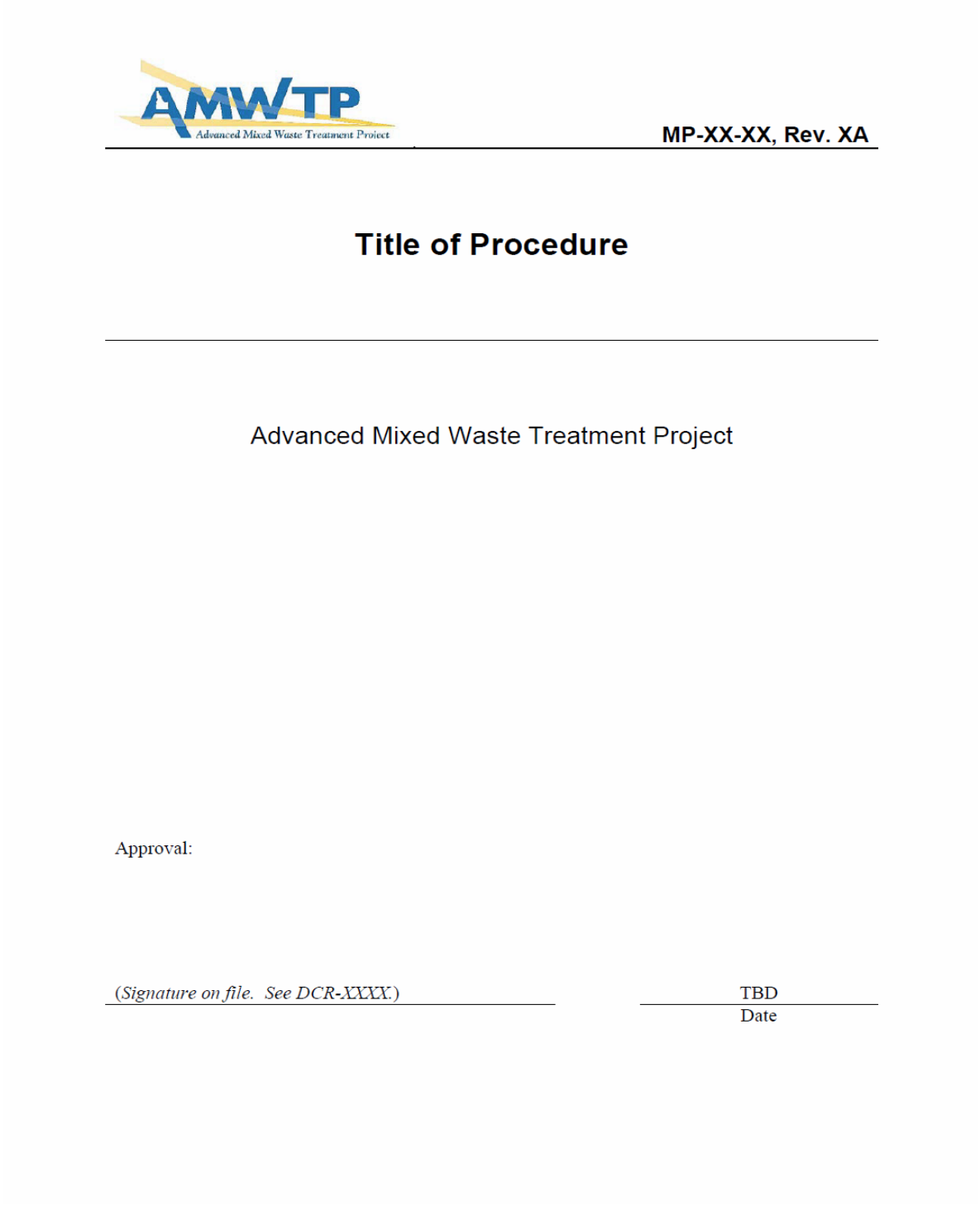

AMWTP
Advanced Mixed Waste Treatment Project

MP-XX-XX, Rev. XA

Title of Procedure

Advanced Mixed Waste Treatment Project

Approval:

(Signature on file. See DCR-XXXX.)

TBD
Date

Document Control

Advanced Mixed Waste Treatment Project

Approval:

(*Signature on file. See DCR-12769.*) 02/06/14

Date

AMWTP MANAGEMENT PROCEDURE		
MP-DOCS-18.4, Rev. 39	Issued: 02/06/14	Effective: 02/07/14
Document Control		

REVISION LOG

Revision Number	Date Approved	Pages Affected	Description of Revision
0	09/04/02	All	Initial issue. DCR-2002-1367
0	09/06/02	All	Minor change to Effective Date. DCR-2002-1486
1	12/31/02	All	To reflect deletion of the "Enterprise" electronic document storage area, the addition of Appendix B for SPM/SQAO documents, changes to the Field Change process, and to add new section detailing SPM & SQAO review requirements. DCR-1527
2	02/18/03	Page 8 Section 4.1.7	DCR-1976. Add Step 4.1.7 as comment resolution from WIPP review.
3	4/24/03	All	Incorporate changes identified during a self-assessment, see DCR-2003-2073.
4	6/24/03	All	Incorporate changes identified by TRU Programs.
5	12/17/03	Pages: 9, 14,15,34, A3	Incorporate training changes that were made to FORM-1001, Rev 5 and controlled distribution changes. See DCR-2452
6	1/29/04	Page 39 Section 4.13.3.1.1	DCR-2635. Re-wrote sentence to reflect certification changes. Also re-wrote sentence to Form-1001, Rev 6 to reflect certification.
7	2/11/04	Page A4	DCR-2700. Removed QA Mgr and ES&H Mgr as required reviewers.
8	3/24/04	Page 17, 4.4.4.1.5	DCR-2863. Provide clarification of requirements regarding the DOE notification of Minor Changes.
9	4/20/04	Page 12, 21, 36, A6	DCR-2932. Update procedure to reflect changes in the process of document control.
10	4/26/04	Page A4	DCR-2974. Minor Editorial Change
11	07/14/04	Appendix B	DCR-3176. Updated procedure list in Appendix B.
12	01/10/05	All	DCR-3175. Entire document revised to meet CBFO requirements and to incorporate process improvements. Address corrective actions from CBFO Audit A 04-22 (ref. AMWTP CAR 9442, CBFO CAR 04-041 and AMWTP CAR 9074). Change Form-1001 to make consistent with process improvement modifications in procedure. Make additional CBFO changes received on 01/06/05. Periodic review.

AMWTP MANAGEMENT PROCEDURE		
MP-DOCS-18.4, Rev. 39	Issued: 02/06/14	Effective: 02/07/14

Document Control

Revision Number	Date Approved	Pages Affected	Description of Revision
13	01/31/05	Appendix A	DCR-4119. Minor change to correct typos in QA review column and page numbers. Also corrected numbering in Block 22 of DCR form.
14	12/7/05	Entire Document	DCR-4162. Entire document revised to apply new MP format, apply DCR-4299 (blue sheet) changes, delete next day follow-up signatures, add CBFO on-line teleconferencing review process, revise Appendix A to current organizational/ownership structure, revise streamline review process, and make editorial clarifications throughout.
15	2/1/06	Appendix B	DCR-4766. Added note clarifying intent and updates of document designation list.
16	5/9/06	Throughout	DCR-4908. Incorporation use of Form-1728 to provide quality check on documents and case files (corrective action for CBFO CAR 06-017, AMWTP CAR 21421). Clarify field change process. Replace requirement for CBFO FYI copies of WIPP-related documents. Update document owner/required reviewer and document type lists (Appendix A). Make minor editorial and clarification changes throughout. Direct that SDCR numbers be provided if revised Forms are related WTS.
17	06/20/06	Appendix A Section 3.6	DCR-5038. Revise Required Reviewer list, allow Owner directed process improvements to be Field Changed, clarified the cancellation/supersede process and made and minor changes throughout.
18	08/04/06	Various	DCR-5181. Add CTR to miscellaneous other document codes in Appendix B and editorial changes. Add instruction to allow field changes to payload or transportation related instructions. The change must be forwarded to CBFO for review and approval.
19	9/11/06	Section 3.7.2 Appendices A and B	DCR-5232. Specify worker involvement and incorporate Field Use Validations, correct reviewers list, and update document type list.
20	01/05/07	Various	DCR-5490. Add several newly identified documents to Appendix C that must have DOE approval and update Appendix B. Remove SPQAO review/approval function to implement changes to DOE-CBFO-94-1012 QAPD Add NTS WCO review and approval function and strengthen periodic review process.

Revision Number	Date Approved	Pages Affected	Description of Revision
21	6/28/07	Sections 3.6, 3.8, and Appendices A & C.	DCR-6074. Provide instructions for inserting Field Changes into controlled documents. Removed Document Owners from Appendix A and updated both Appendix B and C. Re-aligned responsibilities to Operations re-organization. Delineated review requirements for suspension DCRs generated by the Document Services for overdue periodic reviews. Strengthened training needs analysis process by reinstating Form-1010 as part of the case file. Minor process changes with respect to EDMS and editorial changes throughout.
22	11/28/07	Various	DCR-6322. Updated Appendices A, B, C, simplified the Form-1010 process and made corrections and clarifications throughout.
23	02/11/08	Various	DCR-6633. Clarify interface between Document Control and NFM approval for field changes, remove reference to Form-1006 which has been cancelled, and clarify "gap" reviews when incorporating field change revisions.
24	03/21/08	Various	DCR-6802. Update transition to CCP. Clarify step 3.6.10 to add effective date and time in block 15 on DCR form. Editorial changes per MP-DOCS-18.3.
25	05/01/08	Various	DCR-6989. Implement Blue Sheet process for global changes, clarify processing field changes for clarification changes and added "guides" to Appendix A for review.
26	8/14/08	Throughout	DCR-7335. Added requirement to complete on-line field change and controlled copy training when requested. Assigned distinct responsibility to shift supervisors for ensuring operations controlled copies are updated. Applied DOCS-BLUESHEET-01 changes. Clarified USQ evaluations and transmittal of documents to DOE-ID, strengthened validation process and adjusted Appendix A as needed. Strengthened Form Revision DCR usage and software quality for CAR 40286.

Revision Number	Date Approved	Pages Affected	Description of Revision
27	05/26/09	Throughout	DCR-8274. Added "Approved Reviewer". Removed non-required steps related to controlled copy return receipts and added annual controlled copy assessment for CAR 44451. Made updates generated from periodic review, i.e., updated appendices, added new steps to formalize existing process for FC approvals and WTS updates, removed steps that are no longer necessary for holding case files of pending documents and Correspondence Control.
28	10/15/09	Various	DCR-8645. Revised to clarify roles & responsibilities and submittals to DOE, revised process for documenting periodic reviews, removed steps for DCR longevity tracking, and clarified minimum reviewers for PAIT and CCP documents.
29	02/09/10	Various	DCR-8940. Revised to use TrackWise AIs instead of training tracking numbers, define line management, clarify use of partial or complete validations, obtain concurrence from validators, and add the Operations Excellence group to Appendix A.
30	05/19/10	Pg 8 and 17	DCR-9197. Revised to add interface between document revisions and potential FMPs being processed in answer to AI 52557 for CAR 48277.
31	10/7/10	Various	DCR-9515. Revised to add descriptions/definitions to document types in Appendix B (AI 53393), remove controlled copy responsibilities from SS, add review requirements for policies and various clarifications in Appendix A, and rewrite Section 3.11 to capture process for submitting AK documents to CBFO.
32	12/21/10	New Section 3.8	DCR-9739. Corrective Action for CAR 54018 to formalize new Temporary Operating Instruction (TOI) process.
33	3/2/11	Throughout	DCR-9875. Revised to strengthen the FC process with respect to requirement steps for CAR 57986 and revise Appendix A per various requests.

AMWTP MANAGEMENT PROCEDURE		
MP-DOCS-18.4, Rev. 39	Issued: 02/06/14	Effective: 02/07/14

Document Control

Revision Number	Date Approved	Pages Affected	Description of Revision
34	09/15/11	Throughout	DCR-10185. Revised to incorporate DOCS-BLUESHEET-08**,** Analytical Chemistry Laboratory (ACL) procedure process and requirements, PORC review of operational instructions, change of validation types, expanding bluesheet definition to include transition specific changes, and updated Appendix A, Minimum Reviews.
35	7/23/12	Various	DCR-10665. Rewrote document to incorporate process improvements for the review process; updated language consistent with DOE O 422.1; added language to ensure the roles and responsibilities contained in the procedures are current with the actual organization structure. Added changes for USQ process applicability review and appropriate changes to transition responsibility of required reviews to the document owner. Added PLN-ADMN-02 to Appendix C.
36	08/28/12	Appendix C	DCR-11560. Added PD-ISM-01 to Appendix C.
37	09/17/12	Various	DCR-11581. Changed references to superseded documents STD-136 and STD-137 to MP-DOCS-18.8 and MP-DOCS-18.9, respectively; eliminated ACL from the FOI/OI/TOI as required reviewers.
38	09/24/13	Various	DCR-12165. Changes made to replace the SSWC with the Responsible Manager and to incorporate DOCS-BLUESHEET-11.
39	02/06/14	Various	DCR- DCR-12769. Complete rewrite to clarify roles and responsibilities, document types, and the document control process.

TABLE OF CONTENTS

1.0 PURPOSE/SCOPE 1
2.0 ROLES AND RESPONSIBILITIES 3
3.0 PROCEDURE 7
3.1 General Requirements 7
3.2 Creating or Revising a Controlled Document 9
3.3 Processing a Minor Change 14
3.4 Creating Bluesheets 14
3.5 Conducting Periodic Reviews 15
3.6 Reviewing a Document 16
3.7 USQ Process Applicability Review 23
3.8 Processing a Field Change to a Document 25
3.9 Validating a Document 30
3.10 Processing Temporary Operating Instructions 32
3.11 Suspending or Reinstating a Document 33
3.12 Canceling or Superseding a Document 34
3.13 Obtaining DOE-ID Review/Approval on Documents 36
3.14 Obtaining CBFO Review and Approval 37
3.15 Finalizing Approved Documents 40
3.16 Issuing, Distribution, and Notification of Issued Documents 41
4.0 DEFINITIONS 43
5.0 REFERENCES 50
6.0 RECORDS 52

7.0 EXHIBITS 52

8.0 APPENDICES 52

Appendix A – Reviews Required for New and Revised Controlled Documents A1

Appendix B – Document Series Identifiers and Types B1

Appendix C – Documents Requiring DOE-Idaho Review and Approval C1

AMWTP MANAGEMENT PROCEDURE		
MP-DOCS-18.4, Rev. 39	Issued: 02/06/14	Effective: 02/07/14
Document Control		

1.0 PURPOSE/SCOPE

The purpose of this *procedure* (see def.) is to ensure that proposed changes to *controlled documents* (see def.) and *reference documents* (see def.), are properly controlled, formatted, reviewed, and issued; and *external documents* (see def.) (e.g., Central Characterization Project [CCP] and Department of Energy [DOE]-issued documents) are properly controlled, reviewed, and issued. Additionally, this procedure ensures documents used to facilitate the operation and maintenance of the Advanced Mixed Waste Treatment Project (AMWTP) are:

A. Complete

B. Technically accurate

C. In compliance with regulatory/contractual requirements and standards

D. Usable and meet user needs

E. Appropriately implemented.

This procedure includes the activities necessary to enable document owners to create, change, review, validate, suspend, cancel/*supersede* (see def.), and perform *periodic reviews* (see def.) of their controlled documents. A change can be classified as a *field change* (FC; see def.), a *minor change* (see def.), or a *document revision* (see def.). This procedure also includes activities for Document Control distribution and notification of issued documents.

(LST-COPS-01-IM)

The document review process identified in this procedure applies to any employee who proposes changes to, owns, develops, reviews, validates, evaluates, or approves AMWTP controlled documents, including external documents. The processes with MP-DOCS-18.4 shall apply to all new documents or changes to existing documents that are not controlled by one of the following change control or work control documents:

Change Control:

1. INST-CD&M-11.1.2, Facility Modification Proposal Preparation
2. INST-CD&M-11.1.4, Temporary Physical Changes
3. INST-CD&M-11.2.3, System Data Change Request
4. INST-CD&M-11.2.5, Integrated Control System Software Modifications
5. INST-CD&M-11.2.6, Temporary Software Override
6. MP-CD&M-11.1, Change Control

7. MP-CD&M-11.2, Software Quality Assurance
8. MP-CD&M-11.8, Equipment and Process Tests/Investigations

Work Control

1. INST-CMNT-10.1.4, Maintenance Instructions
2. INST-CMNT-10.1.6, Method Statement
3. INST-COPS-9.18.1, Approved Method of Work
4. INST-COPS-9.18.2, Permit to Work
5. INST-COPS-9.18.4, Hazard Assessment
6. MP-COPS-9.18, Work Management, Planning, and Control.

This procedure implements the requirements of MP-COPS-9.14, Operations Procedures, and LST-COPS-01-IM, Conduct of Operations Implementation Matrix. Additionally this procedure implements:

- The requirements of the Documents and Records section of QAPP-01, Quality Assurance Program Plan
- Section 5 of MP-TRUW-8.1, Certification Plan for INL Transuranic Waste
- Section C5 of MP-TRUW-8.2, Quality Assurance Project Plan
- QAP-103, Analytical Chemistry Laboratory Quality Assurance Plan
- PD-LLW-02, Nevada National Security Site Waste Certification Program Plan.

This process does not apply to the AMWTP Hazardous Waste Management Act/Resource Conservation Recovery Act (HWMA/RCRA) permit, air permits, or Toxic Substance Control Act permits for the submittal, modification, and review process. Subcontractor documents subject to the Work Control Program and approved method of work documents are controlled documents, and may be entered into the *Electronic Document Management System* (EDMS; see def.) as such, but do not require a Form-1001, Document Change Request (DCR), to upload.

2.0 ROLES AND RESPONSIBILITIES

Performer	Responsibilities
Document Control	• Manages the control, release, and distribution of controlled documents • Provides document numbers for new documents and reference documents • Maintains *case files* (see def.) for controlled documents that fall within the scope of this procedure • Tracks periodic reviews, open FCs, *temporary operating instructions* (TOIs, see def.), and open DCRs • Initiates TrackWise action items (AIs) prior to periodic review due dates and assigns to document owner • Coordinates document transmittals for all external documents • Processes DCRs that have been submitted to Document Services, including coordinating document reviews • Prepares the documents for issue (e.g., editing, applying formatting standards).

Performer	Responsibilities
Document Owner/ Designee	• Ensures documents are complete, technically accurate, usable, and in compliance with all applicable requirements • Ensures that periodic reviews are completed on or before the periodic review date • Ensures that review processes are conducted in accordance with this procedure • Identifies *hazard assessment* (see def.) and *validation* (see def.) requirements for activity-based procedures • Ensures forms which contain embedded software formulas for which the results are used for operational or programmatic decisions have been validated • Ensures that any training requirements are completed for new or revised documents • Has final approval of document changes • Develops DCRs and document drafts • Identifies the appropriate reviewers for documents, using Appendix A, Reviews Required for New and Revised Controlled Documents, and assists in the resolution of review • Performs unreviewed safety question (USQ) process applicability reviews in accordance with LST-NSPC-02, Document Series and Types Exempted from the USQ Process • Ensures USQ evaluations (see def.) are performed on new documents or document revisions, as required by MP-NSPC-3.2, Unreviewed Safety Question Process.
Document Services	• Prepares and assembles case file contents for submittal as quality records to Document Control when the document is ready for issue.
Document Services Lead/Designee	• Obtains a document number from Document Control for new documents • Updates information in EDMS.
Knowledgeable Reviewer (see def.)	• Reviews documents and provides comments/concurrence to new and revised documents in timeframe specified.

Performer	Responsibilities
Responsible Manager	• Reviews new procedures and changes to existing procedures to ensure all hazards are mitigated in the current job hazard assessment (JHA) and responds to Block 14 • Completes the hazard assessment process if hazards are not addressed • Initiates Form-1001 for subcontractor and external documents that are not part of the Work Control Program and signs as document owner.
Appropriate Operations Manager, Plant Shift Manager (PSMs), *Subject Matter Expert* (SME; see def.), Shift Supervisor (SS)	• Ensures that changes to controlled documents are implemented on the *effective date* (see def.) of the changed document • Notifies personnel within their span of organizational responsibility when changes have been made to controlled documents • Interfaces with document owners, Document Control, and Document Services when process improvements/issues are identified which may warrant revisions to controlled documents • Coordinates/performs validations • Completes FC training when required.
Training	• Reviews document changes for impact to training requirements and to determine if training and/or training materials need to be modified, revised, or developed • Provides a TrackWise action number, when required, for Block 13 of the DCR.
Qualified Unreviewed Safety Question Evaluator	• Completes USQ evaluations in accordance with MP-NSPC-3.2.

Performer	Responsibilities
Site Project Manager (SPM)	• Reviews and approves new AMWTP controlled documents, and determines whether the document should be added to LST-Q&SI-01, WIPP Procedure List • Reviews proposed changes to Waste Isolation Pilot Plant (*WIPP)-related* (see def.) documents to determine if Carlsbad Field Office (CBFO) review/approval is required due to changes affecting data quality objectives (DQOs), or performance criteria • Provides itemized DQO changes for submittal to CBFO • Reviews proposed FCs to WIPP-related documents and ensures that if they are revising approved methods subject to performance demonstration or affecting data quality requirements, they are submitted to CBFO for review/approval.
Nevada National Security Site Waste Certification Official (NNSS WCO)	• Reviews and approves new documents and *NNSS-related documents* (see def.) and FCs to determine if NNSS acceptance criteria are affected • Reviews and approves the suspension of all NNSS-related documents listed in LST-LLW-03, NNSS Procedure Review List • Updates LST-LLW-03, as needed.
Plant Automation Information Technology (PAIT) Personnel	• Reviews and approves new documents and *PAIT-related documents* (see def.) revisions and FCs to determine if Waste Tracking System (WTS) or other software steps are affected • Reviews and approves the documents listed in LST-PAIT-01, WTS/PVCS Affected Procedures and Forms, that are being *suspended*, *canceled* (see defs.), or superseded.
Quality Assurance (QA)	• Reviews documents that translate contractual, regulatory, and customer requirements • Reviews documents that translate CBFO Quality Assurance Program Description (QAPD) or other CBFO requirements • Generates revisions for needed changes to LST-Q&SI-01.
President and Project Manager/ Contract & Logistics Manager	• Transmits requests for review and approval to the Department of Energy Idaho Operations Office (DOE-ID) Contracting Officer • E-mails revised documents, as applicable.

Performer	Responsibilities
User	• Ensures use of the latest approved revision of a document • Becomes familiar with document changes and ensures comprehension thereof.
Controlled Location Personnel (see def.)	• Ensures *controlled copy* (see def.) manuals are updated per the instructions on Form-1004, Document Transmittal • Acknowledges receipt of and returns controlled copy transmittals • Completes controlled copy training, when requested.
Line Management (see def.)	• Communicates changes to appropriate personnel.

3.0 PROCEDURE

3.1 General Requirements

3.1.1 All new documents or changes to existing documents that are controlled within MP-DOCS-18.4 (i.e., not controlled by change control or work control documents defined in Section 1.0) shall be documented on Form-1001.

3.1.1.1 Subcontractor documents (e.g., CCP), and other non-AMWTP documents shall be reviewed and approved per Appendix A and USQ evaluated in accordance with MP-NSPC-3.2.

3.1.1.1.1 The AMWTP responsible manager (Subcontract Technical Representative [STR] for CCP) or designee shall initiate Form-1001 (Block 7) for subcontractor documents.

3.1.1.1.2 The AMWTP responsible manager (STR for CCP) or designee shall sign Form-1001, Block 19, as document owner for subcontractor documents.

3.1.1.2 Department of Energy-issued procedures are issued a DCR for tracking purposes, are not subject to the review/approval process, but are subject to USQ evaluation.

NOTE: *The record copy of a document is the latest, approved hard copy version. An imaged version of the document is maintained in the EDMS.*

3.1.1.3 Users shall use the latest approved revision.

(LST-COPS-01-IM, Para 2.p. [8]; QAPP-01; QAP-103)

3.1.2 Controlled hard copy versions of the latest, approved documents shall only be obtained through Document Control.

(QAPP-01, QAP-103)

3.1.3 Document owners and knowledgeable reviewers shall consider technical adequacy, accuracy, completeness, and compliance with established requirements, as outlined in relevant implementation matrices, or other requirement document.

(DOE/CBFO-94-1012, 1.4.1.C)

3.1.4 With the exception of FCs, only one open DCR is allowed against a document at any given time. Should a change arise when a document already has an open DCR against it, the *requester* (see def.), if different from the document owner, shall work with the document owner to have all changes published under the same DCR.

3.1.5 New and significantly revised operational documents (operating instructions [OIs], facility operating instructions [FOIs], abnormal operating instructions [AOIs], and TOIs) shall include a Plant Review Committee (PRC) review and use-type designation.

(CTR-011, MP-COPS-9.14)

3.1.6 Document Change Requests shall have an expiration date established at 6 months from the date of issue to maintain consistency with the FC process.

3.1.7 When an operation will no longer be performed, the current procedure shall be suspended or canceled.

3.2 Creating or Revising a Controlled Document

NOTE 1: *If a change to an instruction (INST) document (except for TOIs) is needed immediately to allow work to continue, an FC can be processed in accordance with Section 3.8, providing the change does not affect a technical safety requirement (TSR) step.*

NOTE 2: *For consistency, it is preferred that Document Services process the DCRs through completion; however, the document owner or designee has the option to perform the review, with the exception of the quality control (QC) check and submittal to Document Control.*

NOTE 3: *Where document owner is listed as performer, the "designee" applies throughout this procedure*

3.2.1 If the document is an external document, perform the following:

3.2.1.1 Responsible Manager or Designee: If the document is a subcontractor (e.g., CCP) document and NOT part of the Work Control Program, initiate and submit a DCR to track the document through this process.

3.2.1.1.1 Sign Block 7 and after the reviews and USQ evaluation have been completed, sign Block 19 of the DCR as the document owner.

3.2.1.2 Responsible Manager or Designee: If the document is other than a subcontractor (e.g., CCP) document and NOT part of the Work Control Program, initiate and submit a DCR to track the document through this process.

3.2.1.3 Sign Block 7 and after the USQ evaluation has been completed, sign Block 19 of the DCR as the document owner.

3.2.2 Document Owner: Create a draft of the new document, or obtain a native file from EDMS and revise the native file of the existing document in accordance with appropriate procedures, as follows:

- MP-DOCS-18.1, Developing Written Work Instructions
- MP-DOCS-18.3, Developing Management Procedures
- MP-DOCS-18.6, Developing Abnormal Operating Instructions
- MP-DOCS-18.8, Developing Analytical Chemistry Methods
- MP-DOCS-18.9, Developing Analytical Chemistry Laboratory Procedures).

3.2.2.1 Incorporate appropriate and applicable Lessons Learned into the draft being developed and indicate Lessons Learned as the *justification* (see def.) for the change on the DCR, as applicable.

NOTE: *The preferred program for creating forms is Microsoft Word. However, there are occasions when formulas are required to be built into the form, in which case, the form may be created in Microsoft Excel.*

3.2.2.2 If the document is a form, create it in Microsoft Word or Microsoft Excel, as appropriate.

NOTE: *During the development period for new documents and significantly revised documents, preliminary reviews are conducted informally to finalize the technical content and accuracy of the document prior to submittal for formal review and approval.*

3.2.3 Ensure any hazards and mitigation measures resulting from a new or revised JHA are incorporated in the document.

(INST-COPS-9.18.4)

3.2.4 When a DCR is initiated due to changes resulting from a new or revised JHA, enter the results of the JHA as the justification for the proposed change on the DCR.

3.2.5 When the draft is ready for review, perform the following:

3.2.5.1 Document Services Lead/Designee: If the draft is for a NEW document, obtain a document number from Document Control.

3.2.5.1.1 Document Services Lead/Designee: Update appropriate information, including the requester's name, in EDMS.

3.2.5.2 Document Owner: Obtain a DCR number from Document Services lead or designee.

3.2.5.3 Complete the DCR per the DCR instructions.

3.2.5.3.1 If creating a NEW document, mark the Current Revision ID field as "NEW."

3.2.5.3.2 If the document is a form that contains embedded software formulas, perform the following:

3.2.5.3.2.1 Ensure any forms containing formulas used for the purpose of the collection, reduction, production, manipulation, and storage of data that supports the transuranic (TRU) waste program characterization, transportation, and certification processes are validated and placed under configuration management in accordance with MP-CD&M-11.2.

3.2.5.3.3 Complete ALL the Block 4 fields being used to identify the changes, including an appropriate justification for EACH change.

3.2.5.3.4 If the document is associated with operational process changes captured on a facility modification proposal (FMP), record the FMP number in Block 7.

3.2.5.4 Determine if the proposed change is a minor change per the following criteria:

- Revision is to correct grammar or spelling (the meaning has not changed)
- Revision is to renumber sections or attachments
- Revision is to update organizational titles NOT accompanied by a change in responsibilities
- Change is to add, correct, or modify references
- Changes are to non-quality affecting schedules
- Change is a revision or reformating of forms, provided the original intent of the form has not been altered and provided that the form does NOT contain embedded software formulas
- Change is to an appendix marked "Example" or "Sample" or to an exhibit that is clearly intended to be representative only.

3.2.5.4.1 If the criteria of a minor change is met, mark Block 6 of the DCR as a minor change and process per Section 3.3.

3.2.5.5 If any of the items listed below impact the proposed change, identify the appropriate information on the DCR.

- Associated documents and/or forms (Block 17)
- Software Change Requests/System Data Change Requests (Block 7)
- JHAs (Block 14).

3.2.5.6 Evaluate impacts listed in Step 3.2.5.5, and indicate approval via signature in Block 7 of the DCR.

NOTE: *Appendix A serves as a matrix to determine the minimum level of reviews required for the type of document being created or revised.*

3.2.6 Select required reviewers using Appendix A.

3.2.6.1 Ensure the appropriate reviewers have been identified for the document being created or revised per Appendix A.

(DOE/CBFO-94-1012 Section 1.4.1 A-H)

3.2.6.2 Ensure the identified reviewers have requisite knowledge to determine the technical adequacy of the document for its identified/intended purpose.

(DOE/CBFO-94-1012 Section 1.4.1 F; QAPP-01; QAP-103)

3.2.6.3 Include affected process owners that may not be specifically listed in Appendix A.

3.2.7 If the procedure/document is currently under review by CBFO, DO NOT make any additional changes until after receipt of the CBFO review.

3.2.7.1 Incorporate additional changes identified while the document is in CBFO review during resolution of CBFO comments per Section 3.14.

NOTE 1: *In-process records generated under the previous revision of the affected document under change may be completed unless the evaluation of the change determines there is an impact on the activity or data being recorded.*

NOTE 2: *The revision number for a draft consists of a number (indicating the revision being produced) and a letter (indicating the current draft). For example, the first draft of a change to Revision 1 of a document will be Revision 2A. When the document is approved and before it is issued, the letter is deleted and the document becomes Revision 2.*

3.2.8 Raise the revision one numerical level and append a letter designator (indicating draft) in the header.

3.2.9 If the proposed change is not a minor change, proceed to Section 3.6.

3.3 Processing a Minor Change

NOTE: *All documents listed in LST-Q&SI-01 are considered WIPP-related and are to be evaluated to determine if the changes affect QA Program Adequacy review, are data quality affecting, and require submittal to CBFO for review and approval prior to implementation. The type of documents may include AMWTP program documents (such as the Quality Assurance Project Plan [QAPjP] and Certification Plan) and implementing procedures and forms revised to incorporate any changes in characterization, certification, or transportation requirements.*

3.3.1 Document Owner: If the affected document is listed on LST-Q&SI-01, forward the DCR and draft revision to the SPM for concurrence with the minor change determination.

3.3.1.1 SPM: Respond with a written reply, or per telecom, indicating your concurrence.

(MP-TRUW-8.2)

3.3.2 Document Owner: If the SPM does not concur, return to Section 3.2 and process as a normal revision.

3.3.3 Document Owner: Perform a USQ process applicability review or request a USQ evaluation per Section 3.7.

3.3.4 Complete the DCR per the DCR instructions, and forward document and case file to Document Services per Section 3.15.

3.4 Creating Bluesheets

NOTE: *If global changes are needed to several documents, the changes may be implemented through the use of a* bluesheet *(see def.) document.*

3.4.1 Document Owner: Include specific direction regarding the changes within the affected procedures.

3.4.2 Incorporate changes identified on the bluesheet into the affected documents as the documents are being revised and through the normal DCR process outlined in this procedure.

3.4.2.1 Ensure the roles and responsibilities and titles of personnel contained in the documents being revised are consistent with the current organizational structure.

3.4.3 Request a USQ evaluation per Section 3.7.

3.4.4 Complete the DCR per the DCR instructions and forward document and case file to Document Services per Section 3.15.

3.5 Conducting Periodic Reviews

NOTE 1: *Reference documents are exempt from periodic reviews.*

NOTE 2: *Any revision being reviewed may be designated as a periodic review by the document owner.*

3.5.1 Document Owner: Review controlled documents, as a minimum, within the indicated periodic intervals per the table below, to ensure the information and instructions are technically accurate.

(QAPP-01; QAP-103; LST-COPS-01-IM, Para 2.p. [7] b)

Document Type	Review Interval
Operating, maintenance, testing, abnormal operating, alarm response, emergency plans, Analytical Chemistry Laboratory (ACL) and all functional implementing procedures (except as noted below).	Not to exceed 3 years
Charters, lists, and description documents	Not to exceed 3 years
Plans, reports, and guides	As determined by the document owner
Documents with regulatory or contractual periodic review requirements (such as the QAPP, QAP-103, RPT-DSA-02, Documented Safety Analysis, or RPT-TSR-03, Technical Safety Requirements, or PD-ISM-01, Integrated Safety Management System Description Document).	Annual review or as directed by the regulation or requirement

3.5.2 Document Control: Ensure that periodic review intervals and due dates are cited in EDMS.

3.5.3 Track periodic reviews and notify document owners at least 60 days prior to periodic review date.

3.5.3.1 Initiate an AI in TrackWise for the periodic review to be performed and assign to the document owner.

3.5.4 Document Owner: Upon being notified that a periodic review is coming due, perform a thorough review of the document.

3.5.5 If the review does NOT result in changes, update this information in the AI and process the AI to closure.

3.5.6 Document Control: Upon receipt of TrackWise notification, update EDMS with new periodic review date.

3.5.7 Retain the TrackWise notification in document control files.

3.5.8 Document Owner: If changes DO result from the periodic review, initiate a DCR in accordance with Section 3.2 and the DCR instructions.

3.6 Reviewing a Document

NOTE 1: *Reviews may be conducted manually (via hard copy), electronically, or through roundtable reviews.*

NOTE 2: *In an effort to facilitate timely reviews and document processing, reviews are limited to an initial review and a final review containing comments from the initial review, JHA-required changes, and validation changes (if an instruction or form giving instruction or being revised in conjunction with an INST), as applicable.*

3.6.1 Document Owner: Before the formal review process, ensure the Responsible Manager reviews the proposed document or change with regard to the JHA.

3.6.2 Responsible Manager: Review the document to assess the proposed procedure/changes to assure all hazards are mitigated in the current JHA or initiate the hazard assessment process if hazards are not addressed.

NOTE: *If a revision to an INST being reviewed per this section is to incorporate approved FCs ONLY, some steps within this section will have already been completed during the FC approval process. The previous FC DCR approvals, in conjunction with the remaining required knowledgeable reviewers for a procedure revision, will constitute a complete review. A new USQ process applicability review or USQ evaluation is required.*

3.6.3 If the document is an ACL procedure or method, consult with the laboratory management to determine use-type.

3.6.4 Determine a review due date.

3.6.5 Forward an electronic copy of the draft document with tracked changes, and the associated DCR, to the knowledgeable reviewers.

NOTE 1: *Forms associated with or implemented by new documents or those determined to be WIPP-, NNSS-, or PAIT-related are included in the SPM/NNSS/PAIT review, respectively.*

NOTE 2: *Forms implemented through documents appearing on LST-Q&SI-01 and LST-LLW-03 are considered as being on the applicable list.*

NOTE 3: *New forms implemented by non-WIPP-related or non-NNSS-related procedures do not require SPM or NNSS review. All new forms do require a PAIT review.*

3.6.6 Document Owner: If the document is new or WIPP-related, submit to the SPM for review and approval.

3.6.6.1 SPM: Review document to determine if CBFO review and approval is required due to changes affecting DQOs or performance criteria, and if it should be added to LST-Q&SI-01, and respond accordingly.

3.6.6.1.1 Notify the QA manager of new documents that are to be added to LST-Q&SI-01 to generate a revision to the list.

3.6.6.1.2 QA Manager: Initiate a DCR to LST-Q&SI-01 to add new documents that have been identified for WIPP-related review.

3.6.7 Document Owner: If the document is new, reinstated, or NNSS-related, submit it to the NNSS WCO for review and approval.

3.6.7.1 If the document is not listed on LST-LLW-03, but includes new requirements or processes related to the Waste Certification Program, or pertains to waste characterization, packaging, processing, certification, or transfer of LLW or MLLW, ensure the NNSS WCO is included in the review.

3.6.7.2 NNSS WCO: Review document to determine if changes impact NNSS acceptance criteria and if it should be added to LST-LLW-03 and respond accordingly.

(PD-LLW-02)

3.6.7.2.1 Initiate a DCR to LST-LLW-03 to add new documents that have been identified for NNSS-related review.

3.6.8 Document Owner: If the document is new or PAIT-related, submit it to PAIT personnel for review and approval.

3.6.8.1 PAIT Personnel: Review document to determine if the document should be added to LST-PAIT-01 and respond accordingly.

3.6.8.1.1 Initiate a DCR to LST-PAIT-01 to add new documents that have been identified for PAIT-related review.

3.6.8.2 If the document is listed in LST-PAIT-01, ensure WTS personnel review.

NOTE: *A Training review is not required for minor changes or for changes that affect informational and non-implementing documents (e.g., report [RPT], plan [PLN]).*

3.6.9 Document Owner: Submit the document to the Training organization for a training needs determination.

3.6.10 Training: Coordinate with the document owner to determine training needs.

3.6.10.1 Document training needs in Block 13 of the DCR.

3.6.10.1.1 If training is required, open and assign a TrackWise AI.

3.6.11 Knowledgeable Reviewer: Review the proposed changes identified on the DCR.

NOTE: *Comments unrelated to the proposed change may be returned without resolution.*

3.6.11.1 If the document is being reviewed as a periodic review, review the entire document.

3.6.11.2 If the content of the proposed change does not have an impact on the knowledgeable reviewer's discipline, respond indicating the reviewing department does not need to review the document.

3.6.11.3 Evaluate the change to determine whether the change:

- Is technically accurate
- Is workable as written
- Is within process and hardware limitations
- Meets applicable requirements
- Affects key procedure steps
- Requires initiation of an FMP in accordance with MP-CD&M-11.1
- Satisfactorily implements hazard mitigation measures
- Is driven by a change in law, regulation, DOE requirements, or a change to the contract.

(LST-COPS-01-IM, 2.p)

3.6.11.3.1 If change will result in a change to the contract, perform appropriate steps and evaluations in accordance with MP-ADMN-1.18, Requirements Management.

3.6.12 By the requested date, document all comments or concurrence to the changes using ONE of the following methods:

- Itemize list of comments using Form-1003, Review Comment and Resolutions Form, marking the *significant comments* (see def.)
- Sign the DCR in Block 9 to indicate concurrence with proposed changes
- Reply to the notification e-mail with concurrence.

3.6.13 Return documented comments/concurrences to the document owner, or Document Services, as requested.

NOTE*:* *Unsolicited comments do not require resolution but may be resolved at the discretion of the document owner.*

3.6.14 Document Owner: Resolve initial review comments related to the proposed change.

(LST-COPS-01-IM, Para 2. p [2] e. and 4)

3.6.14.1 If the document is an INST, ensure it is validated per Section 3.9 and a hazard assessment has been performed, as applicable.

3.6.14.2 Ensure any forms containing formulas used for the purpose of the collection, reduction, production, manipulation and storage of data that supports the TRU waste program characterization, transportation and certification processes are validated and placed under configuration management in accordance with MP-CD&M-11.2.

3.6.15 Document the resolutions (e.g., Form-1003) and retain for the case file.

3.6.16 Incorporate the comment resolutions, validation comments, and/or JHA information, as appropriate, into the revised draft and update the revision ID to the next letter designator (example: Draft 6A becomes Draft 6B).

3.6.17 Submit a final draft version of the revised document to the original knowledgeable reviewers and validation team, if applicable, for concurrence of changes, with all completed Forms-1003 attached, or organize a roundtable comment resolution meeting.

3.6.18 Knowledgeable Reviewers/SPM/NNSS WCO: When all significant comments received from the review period are resolved satisfactorily, indicate concurrence by ONE of the following methods:

- An e-mail notification response
- Signature on the DCR
- Per "telecom" if circumstance prohibits either of the above.

3.6.19 Document Owner: If a knowledgeable reviewer will not concur with an irresolvable comment that is indicated as other than significant, but cannot provide a specific standard-, requirement-, or safety management-based source requirement to support the comment, note the objection in the case file and incorporate or reject the change, as applicable.

3.6.20 Document Owner and Knowledgeable Reviewers: If there are significant comments with unresolvable issues resulting from the review, elevate the issue for resolution through affected management.

3.6.20.1 Include the SPM when elevating unresolvable issues to WIPP-related documents.

(MP-TRUW-8.2, C5-2)

3.6.20.2 Include the NNSS WCO when elevating unresolvable issues to NNSS-related documents.

(PD-LLW-02)

3.6.20.3 Include PAIT when elevating unresolvable issues to PAIT-related documents.

3.6.20.4 Document the management resolution in one of the methods listed in Step 3.6.18.

3.6.21 If a knowledgeable reviewer will not concur to an unresolvable comment, but cannot provide a specific-source, standard-, requirement-, or safety management-based requirement to support the comment, note the objection in the case file and issue the change as written.

3.6.22 Responsible Manager: Review the document to assess the accepted proposed changes to assure all hazards are mitigated in the current JHA or initiate the hazard assessment process if hazards and mitigation measures are not addressed following the review cycle.

3.6.23 Document Owner: If the document is a new or significantly revised operational INST, or meets the criteria for critical plant activities as listed in CTR-011, Plant Review Committee Charter, and when the Block 9 review cycle is completed, coordinate with the Plant Manager's office for PRC review and use-type designation.

3.6.24 Document Owner: When all resolvable comments have been incorporated, ensure that the following items are provided to Document Services, as applicable, in the case file/DCR package:

- Completed DCR through Block 14, with ALL blanks filled in
- Completed Form-1003(s) with accepted comment resolutions and documented concurrence
- Any e-mail that includes comments, justifications, satisfactory resolution, and/or no comment statements
- Redline markups that are signed and dated
- Completed Form-1002, Procedure Validation Request (see Step 3.9.2).

3.6.25 Forward documentation for the case file to Document Services for a QC check per Section 3.16.

NOTE: *The document owner initials are not required for Block 13 prior to USQ evaluation, but the Training response is required.*

3.6.26 Document Services: Forward PDF files of the final draft revision (clean and redline), the DCR completed through Block 14, and comment forms, as appropriate, to the USQ Review folder so that a qualified USQ evaluator can evaluate in accordance with Section 3.7, as required.

3.6.27 Document Owner: Upon notification that the USQ has been approved, complete and sign Blocks 13 and 19, as appropriate.

3.6.28 Document Services: Ensure the DCR is complete and approved.

3.6.28.1 Retain the USQ approval notification in the case file.

3.6.29 If the document does not require external review and approval (i.e., CBFO or DOE-ID), proceed to Section 3.15 to finalize the document.

3.6.30 If the document DOES require external review and approval (i.e., CBFO or DOE-ID), perform the following:

3.6.30.1 Enter "Pending XXX Approval," where XXX = the external organization in the approved document header.

3.6.30.2 Proceed to Section 3.14 or 3.15, as appropriate.

3.7 USQ Process Applicability Review

3.7.1 Document Owner: Perform a USQ process applicability review, per the following:

3.7.1.1 If the change is to a document that meets the criteria identified in LST-NSPC-02, perform the following:

3.7.1.1.1 Mark the check box in Block 15a of the associated DCR indicating that the change does not apply to the USQ process.

3.7.1.1.2 Sign and date the signature line in Block 15a.

3.7.1.2 If the change is to a document that does not meet the criteria identified in LST-NSPC-02, request a USQ evaluator perform a USQ evaluation in accordance with MP-NSPC-3.2.

3.7.2 Forward PDF files of the final draft revision (clean and redline), the DCR completed through Block 14, and comment forms, as appropriate, to the USQ Review folder OR hand-carry the hardcopy material to the USQ evaluator.

3.7.3 Document Owner: Upon notification that the USQ has been approved, complete and sign Blocks 13 and 19, as appropriate.

3.7.4 Document Services: Ensure the DCR is complete and approved.

3.7.5 Retain the USQ approval notification in the case file.

3.7.5.1 If a USQ exists, do not approve the DCR.

3.7.5.1.1 Check the appropriate box in Block 15b that a USQ exists.

3.7.5.1.2 Submit the DCR and supporting documentation to Document Control for retention.

3.7.5.1.3 If no USQ exists, record the Categorical Exclusion Review or USQ Determination number in Block 15b on the DCR and sign Block 15b and Block 19.

3.7.5.2 Retain the USQ approval notification in the case file.

3.7.6 If the document does not require external review and approval (i.e., CBFO or DOE-ID), finalize the document per Section 3.15.

3.7.7 If the document DOES require external review and approval (i.e., CBFO or DOE-ID):

3.7.7.1 Enter "Pending XXX Approval," where XXX = the external organization in the approved document header.

3.7.7.2 Proceed to Section 3.13 or 3.14, as appropriate.

3.8 Processing a Field Change to a Document

NOTE 1: *Criteria for a FC to an INST document are listed below:*

- *The FC addresses unanticipated conditions affecting routine operational activities that might stop work or cause work to be unreasonably delayed; and do not introduce new hazards requiring performance of a hazard assessment or the development of a TOI.*
- *Needed for immediate corrective actions.*

NOTE 2: *Field changes cannot be made when:*

- *The changes affect steps required by, and notated with, a safety basis document (i.e. Documented Safety Analysis [DSA]/TSR, Criticality Safety Evaluation) or HWMA/RCRA Permit rolldown*
- *The changes introduce new hazards that have not been previously addressed*
- *The changes remove hold points*
- *The changes are minor or made for clarification and do not impact work to be performed*
- *The change would necessitate a WTS software change.*

NOTE 3: *An online training course is available on TRAIN for processing FCs.*

3.8.1 Document Owner: Ensure training for FCs is current.

(MP-TRUW-8.1; MP-TRUW-8.2; PD-LLW-02)

NOTE: *Temporary FCs to Analytical Chemistry Methods Manual (ACMM) and Analytical Chemistry Laboratory procedures (ACLP) INSTs involving sample-specific changes may be kept in effect for the duration of the sample and data processing time.*

3.8.2 Discuss the proposed FC with the highest level of management available, but at least the PSM (if operations), to confirm that it meets the following criteria:

- Is technically accurate and feasible
- Complies with applicable requirements and provides equivalent safeguards
- Does not affect steps required by, and notated with, a safety basis document (i.e., DSA]/TSR, Criticality Safety Evaluation,) or HWMA/RCRA Permit rolldown
- Does not remove a hold point
- Does not adversely impact safety of personnel and/or facility
- Is needed immediately to prevent adverse impact to operating needs
- Is relevant to facility specific operations
- Does not introduce hazards that have not been previously addressed
- Does not necessitate a WTS software change
- Changes are not minor, are not clarifications, and do not impact work to be performed.

3.8.2.1 If the criteria in Step 3.8.2 are not met, process a revision to the document in accordance with Section 3.2.

3.8.3 Complete the DCR form for the FC per the DCR instructions.

NOTE: *Analytical Chemistry Laboratory, ACMM, and ALAB instructions do not require NFM approval or Plant Manager acknowledgement in Block 5 of the DCR and only ALAB instructions require Criticality Safety approval for FCs to ACL documents.*

3.8.4 Obtain Criticality Safety and NFM approval for the FC and record in Block 5 of the DCR.

(ANSI/ANS-8.19-2005)

3.8.5 Ensure the plant manager has acknowledged the necessity of the FC by initialing in Block 5 of the DCR.

3.8.6 Approve the proposed FC in Block 7.

3.8.7 Document Owner: Perform a USQ process applicability review in accordance with the DCR instructions and complete Block 15a of the DCR.

3.8.8 Create a *working copy* (see def.) of the document being changed.

3.8.9 Manually update the working copy by performing the following:

3.8.9.1 Using ink handwritten or typed colored redlines, annotate the changes needed within the procedure, ensuring the following:

- Page breaks and page numbering are not affected
- Changes made are clearly visible using colored redlines and strikeouts.

3.8.9.2 Place revision bars in the left margin with the unique FC number (e.g., FC-1) to the left of each applicable bar associated with the changes.

3.8.9.3 Annotate the document revision log with a description of the change, the DCR number, and the FC number (e.g., FC-1).

NOTE: *Field change approval by SPM, NNSS WCO, Criticality Safety, and Plant Manager acknowledgement may be obtained by telecom.*

3.8.10 If the document is WIPP-related, obtain SPM approval of FC for Block 10a of the DCR.

3.8.10.1 If the proposed FC, as determined by the SPM, affects DQOs or performance criteria, submit the proposed change to CBFO for review/approval prior to finalizing the FC.

3.8.10.2 SPM: If the FC does not affect DQOs, performance criteria, or Type B package quality affecting operations, submit the FC to CBFO for information only.

(MP-TRUW-8.1; MP-TRUW-8.2)

3.8.11 Document Owner: If the document is NNSS-related, obtain NNSS WCO approval of the FC for Block 10b of the DCR.

3.8.12 If the document is PAIT-related obtain PAIT approval of the FC for Block 10c of the DCR.

3.8.13 PSM/SS: Review the DCR and annotated working copies for completeness and accuracy.

3.8.14 Document the effective date and time in Block 16 of the DCR.

(QAPP-01; QAP-103)

3.8.14.1 PSM/SS/Designee: If the document is an operations INST (OI, FOI, or AOI), make a log entry noting the date and time for implementing the FC from Block 16 of the DCR.

3.8.14.2 If the procedure is WIPP-related, make necessary revision update in WTS.

3.8.15 Document Owner: Replace the affected pages in the controlled AND working copies used in the field and attach a copy of the completed DCR to the front of both.

3.8.16 Perform a briefing of the FC to all affected personnel and document the briefing on the SS log.

3.8.17 Deliver the original DCR and annotated pages to Document Control no later than the next working day.

3.8.18 Document Control: Upon receipt of an approved FC and DCR, perform a QC on the DCR and annotated pages for completeness.

3.8.18.1 If incomplete or incorrect, return FC package to appropriate document owner for correction.

3.8.18.2 Document Owner: After correcting/completing returned FC, repeat Steps 3.8.15 through 3.8.17

3.8.19 Document Control: Complete the Document Control portions of the DCR per the DCR instructions.

3.8.20 Post the FC onto EDMS.

3.8.21 Check for any open DCRs against the document.

3.8.21.1 If an open DCR exists for the document, direct the document owner to work with the holder of the open DCR to incorporate the FC into their revision.

3.8.22 Distribute controlled copies (yellow) of the approved FC to all controlled copyholders/manual locations in accordance with Section 3.16.

NOTE: *A document may only have up to five FCs posted to it at any time.*

3.8.23 Track open FCs and notify the document owner when either of the following conditions exist:

- There are, at the most, five FCs against one document.
- A FC is within 30 days of reaching a 6-month timeframe.

(LST-COPS-01-IM Para 2.p. [4] d)

3.8.24 Document Owner: Initiate a DCR to incorporate permanent FCs into a revision within 6 months of issuing the FC, or when several FCs have accumulated (e.g., no more than five).

(LST-COPS-01-IM, Para 2.p)

3.9 Validating a Document

NOTE: *All INST procedures, and forms that are either associated with the INST or independently direct work, require validation.*

3.9.1 Document Owner: Ensure new procedures and revisions to existing procedures (excluding minor changes) are validated to ensure accuracy and usability.

3.9.1.1 Ensure validations are not performed with actual radiological or hazardous waste or in radiological areas except as allowed during *limited field use validation* (see def.).

3.9.1.2 Prior to a limited field use validation, perform a USQ process applicability review and complete Box 3a of Form-1002, or request a USQ evaluation as per Section 3.7 and complete Box 3b of Form-1002.

3.9.1.3 Ensure all operations procedures (OIs, FOIs, and AOIs) are validated as Controlled Activity procedures as defined in MP-COPS-9.14, regardless of the actual use-type designation.

NOTE: *If validation of a step will disrupt plant conditions, then at the direction of the PSM/SS, or laboratory management, as appropriate, the step may be simulated.*

3.9.2 Document Owner: Initiate Form-1002.

NOTE: *Validation of software formulas contained within approved forms which produce calculated results is completed per MP-CD&M-11.2 or engineering design analysis processes, not Section 3.9 of this procedure.*

3.9.2.1 Ensure any forms containing formulas used for the purpose of the collection, reduction, production, manipulation, and storage of data that supports the TRU waste program characterization, transportation and certification processes are validated and placed under configuration management in accordance with MP-CD&M-11.2.

3.9.3 Determine the appropriate validation method to be used (limited field use, *mockup, walkdown* [for use by ACL only], or *tabletop validation* [see defs.]).

3.9.4 Determine whether the validation should be a *complete validation* (see def.) or a *partial validation* (see def.).

3.9.5 Assign SMEs, as well as operators that perform the procedure, to participate in the validation.

NOTE: *Validations are performed to ensure the procedure steps are correct and written to the correct level of knowledge, skills, and abilities of the personnel who will be using the procedure. It is also advisable to include Document Services personnel.*

3.9.6 SME: Ensure all affected performers that have responsibility for performing steps in the procedure are represented on the validation team, including the SS.

NOTE: *The preferred method of validation is either limited field use or mockup. A tabletop validation is recommended only when a limited field use, mockup, or walkdown (for use by ACL only) validation is not practical.*

3.9.7 Validate the draft procedure using Form-1002 and included guidance.

(LST-COPS-01-IM, Para 2 [p] 4 h)

3.9.7.1 If a form has embedded software formulas, ensure the reliability of the results as part of the validation.

3.9.7.2 Validate the changed sections of the procedures in their entirety to ensure usability of the procedure.

3.9.7.3 Document any comments or recommendations on Form-1003, or redline the draft working copy (initialed and dated).

3.9.7.4 Obtain signatures and dates from the personnel listed on the validation form and return the completed form and the draft markup or Form-1003, as appropriate, to the document owner.

3.9.8 Submit the Forms-1002 and -1003, if applicable, to Document Services for retention in the case file.

3.9.9 Document Services: If comments were generated from the validation, incorporate the comment resolutions and send the document out for final resolution.

3.9.10 When final resolutions are complete, request a USQ evaluation per Section 3.7.

3.10 Processing Temporary Operating Instructions

NOTE: *This section is performed when plant management determines that a TOI is the best course of action for non-routine, one-time only work, and work development activities (e.g., recovery of severely degraded boxes, system operational testing). This process does not apply to operational exempt work which must follow appropriate work control procedures identified in MP-COPS-9.18.*

3.10.1 Document Owner/Designee: Process TOIs in accordance with the following sections:

1. Section 3.2, Creating or Revising a Controlled Document
2. Section 3.6, Reviewing a Document
3. Section 3.9, Validating a Document.

3.10.2 Establish an expiration date that is 45 days after the effective date of the procedure.

3.10.3 Submit the document and supporting case file to Document Services.

3.10.4 Document Services: Finalize document per Section 3.15, Finalizing Approved Document.

3.10.5 Document Owner: If an additional 45-day extension is required to finish the operational activity, perform the following:

3.10.5.1 Download the DCR case file and procedure from EDMS and correct the expiration date, using redlines, dates, and initials.

3.10.5.2 Obtain approvals for the extension from:

- Plant Manager
- Nuclear Facility Manager
- Plant Shift Manager.

3.10.5.3 Ensure the extension is entered in the appropriate PSM and SS logs.

3.10.5.4 Resubmit corrected DCR, with evidence of approvals, to Document Control.

3.11 Suspending or Reinstating a Document

NOTE: *This section is performed when a document owner determines that a controlled document should be suspended from authorized use, and when* reinstatement *(see def.) is needed.*

3.11.1 Document Owner: Initiate a DCR per the form instructions.

NOTE: *Reinstating suspended procedures requires the complete DCR process to ensure that changed conditions or requirements are addressed in the document.*

3.11.1.1 If reinstating the document, process as a NEW document and proceed to Section 3.2.

3.11.2 Perform a USQ process applicability review in accordance with the DCR instructions and complete Block 7a.

3.11.3 If suspending, transmit an electronic copy of the DCR and document to be suspended to the knowledgeable reviewers identified on the DCR per Appendix A, including the SPM/NNSS WCO and Environmental.

3.11.4 SPM: Review and approve the suspension of all WIPP-related documents listed in LST-Q&SI-01.

(MP-TRUW-8.1; MP-TRUW-8.2)

3.11.5 NNSS WCO: Review and approve the suspension of all NNSS-related documents listed in LST-LLW-03.

(PD-LLW-02)

3.11.6 PAIT: Review and approve the suspension of all PAIT-related documents listed in LST-PAIT-01.

3.11.7 Document Owner: If the review results in objections, and the document is determined to be necessary, perform the following:

3.11.7.1 Discontinue the suspension.

3.11.7.2 Document the objections on the DCR.

3.11.7.3 Forward the case file to Document Control to cancel the DCR number.

3.11.8 If no objections are received, request a USQ evaluation per Section 3.7, if indicated on the DCR.

3.11.9 Submit the DCR, document, and case file to Document Services.

3.11.10 Document Services: Finalize the document per Section 3.15.

3.12 Canceling or Superseding a Document

NOTE: *This section is performed when a document owner determines that a controlled document needs to be canceled or superseded.*

3.12.1 Document Owner: Initiate a DCR per the DCR instructions.

3.12.2 Ensure the justification addresses that the requirements, instructions, responsibilities, and other material contained in the document to be canceled/superseded are adequately addressed in another identified document or are no longer needed.

3.12.3 Perform a USQ process applicability review in accordance with the DCR instructions and complete Block 15a.

3.12.4 Transmit an electronic copy of the DCR and document to be canceled/superseded to the knowledgeable reviewers identified on the DCR per Appendix A, including the SPM and PAIT.

3.12.5 For NNSS WCO reviews, submit all review requests/notifications with applicable electronic information to the "LLW MLLW Doc Reviews," not to the individuals.

3.12.6 SPM: Review and approve the cancellation or supersedance of any WIPP-related documents listed in LST-Q&SI-01.

(MP-TRUW-8.1; MP-TRUW-8.2)

3.12.7 NNSS WCO: Review and approve the cancellation or supersedance of any NNSS-related documents listed in LST-LLW-03.

(PD-LLW-02)

3.12.8 PAIT Personnel: Review and approve the cancellation or supersedance of any PAIT-related documents listed in LST-PAIT-01.

3.12.9 Document Owner: If no objection, request a USQ evaluation per Section 3.7, if indicated on the DCR.

3.12.10 If the review and/ environmental evaluations DO result in objections, discontinue the cancellation.

3.12.10.1 Document the reason for the cancelation for the DCR in Block 7 of the DCR.

3.12.10.2 Submit the case file to Document Control to cancel the DCR number and update EDMS.

3.12.11 Document Owner: Complete the remainder of the DCR.

3.12.12 Submit the DCR, document, and case file to Document Services.

3.12.13 Document Services: Prepare the case file, including Form-1728 and submit to Document Control.

3.12.14 Document Control: Close out the DCR and update EDMS.

3.13 Obtaining DOE-ID Review/Approval on Documents

NOTE: *Appendix C, Documents Requiring DOE-Idaho Review and Approval, lists those documents that require formal review and approval by DOE-ID.*

3.13.1 Document Services: Ensure the document has been internally reviewed, approved, and quality checked in accordance with the appropriate sections of this procedure.

3.13.2 Provide a PDF of the approved DCR and revised document to the document owner to submit with the transmittal letter to DOE.

NOTE: *If the redlines are such that reviewing the document would be difficult, it is recommended that a "clean" copy of the document be transmitted along with the redlined version.*

3.13.3 Document Owner: Transmit the document to the President and Project Manager or the Contract and Logistics Manager.

3.13.4 President and Project Manager/Contract and Logistics Manager: Using written correspondence, submit the document to the appropriate manager or contracting officer's representative (COR) at DOE-ID requesting their review and approval.

3.13.4.1 Copy Document Services on the correspondence at docserv@amwtp.inl.gov.

(AMWTP Correspondence Approval Matrix)

3.13.4.2 Document Services: Retain a copy of the submittal letter for the case file.

3.13.5 Document Owner: Resolve all external organization comments when received.

3.13.6 Incorporate any required changes to the draft document and retain any comment and resolution correspondence for the case file.

3.13.7 Document Services: Send an "FYI" email to DCR reviewers notifying them of any changes that were made to the document.

3.13.8 Submit document containing changes for USQ evaluation per Section 3.7.

NOTE: *Following satisfactory comment resolution with DOE-ID, additional review comments by AMWTP personnel should be unnecessary and avoided.*

3.13.9 Unless authorized to proceed with the revision by DOE-ID, submit a copy of the revised document containing the incorporated comments and a copy of the completed comment resolution documentation to the ITG Prime Contract Manager for resubmittal to DOE.

3.13.10 Upon receipt of document approval from DOE-ID, submit the document and case file, including a copy of the external organization approval, to Document Services.

3.13.11 Document Services: Prepare the case file, including Form-1728, and finalize per Section 3.15.

(AMWTP Correspondence Approval Matrix)

3.14 Obtaining CBFO Review and Approval

3.14.1 Document Services: Ensure the document has been internally reviewed, approved, and quality checked in accordance with the appropriate sections of this procedure.

3.14.2 Provide a PDF of the revised document and completed DCR, along with comment forms (Form-1003), to Document Control to submit to a DOE-ID representative for approval to formally send the document to CBFO.

NOTE: *If the redlines are such that reviewing the document would be difficult, it is recommended that a "clean" copy of the document be transmitted along with the redlined version.*

3.14.3 Document Control: Forward, via e-mail, the following to DOE-ID and request concurrence for submittal to CBFO:

- Redlined PDF copy of the draft document
- PDF copy of the approved DCR
- Comment sheets (Form-1003)
- Explanation of the change and why it is data quality affecting as received from the SPM.

3.14.4 When concurrence is received from DOE-ID, forward to CBFO to site.documents@wipp.ws for review and approval

NOTE: *Additional comments received on a document currently in review by CBFO may be incorporated during the resolution of CBFO comments but are to be clearly delineated on the CBFO Document Review Record (DRR). Subject to CBFO approval, the additional comments may require a full re-review by CBFO.*

3.14.5 Document Owner/Document Services/Designee: If external comments are received, forward comments to document owner for resolution and retain for the case file.

3.14.6 Submit revised draft and completed DRR back to CBFO as follows:

3.14.6.1 Document Control: If document is WIPP-related, but not an *Acceptable Knowledge* (AK) *report* (see def.), transmit completed DRR and revised final document to CBFO at site.documents@wipp.ws and request a Web-X, if applicable.

3.14.6.1.1 If a Web-X is not conducted, request a USQ evaluation per Section 3.7 prior to sending revised document back to CBFO.

3.14.6.2 Document Owner: If submittal is an AK report, request a USQ evaluation per Section 3.7.

NOTE: *Final drafts of AK reports are documented via a completed DCR and document owner signature (with date) on the cover page. The effective date on the bottom right corner of the cover page remains "Pending CBFO Approval."*

3.14.6.3 Transmit the revised final draft of AK report/package requesting approval using written correspondence from TRU Program Manager to appropriate CBFO Manager or COR.

3.14.6.4 Document Control: Send copy of completed DRR to site.documents@wipp.ws.

3.14.7 If a Web-X is deemed appropriate, provide all potential attendee names and e-mail addresses, to include:

- SPM
- Original knowledgeable reviewers
- Document author
- Document owner
- Document Services representative
- DOE-ID.

3.14.7.1 Knowledgeable Reviewers/Meeting Attendees: Follow directions provided via the online review meeting e-mail invitation.

NOTE: *Following satisfactory comment resolution with CBFO, and to avoid a new review, additional review comments by AMWTP personnel should be held until the next revision.*

3.14.7.2 Document Owner: During the on-line resolution review meeting with CBFO, make any additional changes to the document as agreed to by the document owner, DOE-ID, and CBFO participants.

3.14.7.3 Request a USQ evaluation per Section 3.7.

3.14.8 Document Control: Send finalized document and DRR back to site.documents@wipp.ws for approval coordination.

3.14.8.1 If an approval notification is not received within a reasonable amount of time, submit a reminder request.

3.14.9 Upon receipt of final document approval from CBFO, notify document owner or Document Services to finalize the document per Section 3.15.

3.14.9.1 Indicate the effective date as the next business day following receipt of approval if not affected by other pending items or actions.

3.15 Finalizing Approved Documents

NOTE: *To accommodate access for implementation actions, documents can be issued by Document Control as "PENDING" without interrupting availability of current and effective documents.*

3.15.1 Document Services: Ensure that the document owner has signed indicating final approval on the DCR (Block 19) per the DCR instructions.

3.15.2 Ensure Form-1001 is complete.

NOTE: *If the document received CBFO review and approval, the approval date on the cover page should be the date approved by CBFO, not when Block 19 of the DCR was signed by the document owner, unless otherwise directed by CBFO.*

3.15.3 Enter the appropriate approval date on the cover page of the document, as applicable.

3.15.4 Remove the alpha designator.

3.15.5 If the document is a form, and formatted in Microsoft Word, perform the following:

3.15.5.1 Accept all tracked changes before printing so the form will print consistently on all computers.

3.15.5.2 "Protect" the file for filling in forms to ensure check boxes, etc., work properly.

3.15.5.3 Save the electronic file as a template.

3.15.6 If the document is a form, and formatted in Microsoft Excel, perform the following:

3.15.6.1 If the form contains formulas, protect the appropriate cells to ensure embedded formulas cannot be changed.

3.15.6.2 "Password protect" the file, when requested by the document owner.

3.15.6.3 Save the electronic file as a template.

3.15.7 If the document is **NOT** a form, update the "Track Changes" options in Word:

3.15.7.1 Change deleted text to "hidden."

3.15.7.2 Change the color of new text to "none."

3.15.7.3 Retain the setting for revision bars in the outside margin on the printed document.

3.15.8 If the document revision involves a substantial rewrite wherein revision bars would be distracting, accept all changes, and indicate "Entire document revised" in the revision log of the document and in Block 4 of the DCR.

NOTE: *Forms do not require PDF copies, but will remain in the native template file format.*

3.15.9 Create a PDF copy of the native file.

3.15.10 Perform a QC check on the document, DCR, and case file using Form-1728.

3.15.10.1 Place the completed Form-1728 in the case file.

3.15.11 Submit the entire DCR package (associated electronic native files, PDF files of the document, if created, and the case file documentation) to Document Control for processing and issuance per Section 3.16.

3.16 Issuing, Distribution, and Notification of Issued Documents

3.16.1 Document Control: Verify the DCR is complete and that a completed Form-1728 is present.

3.16.1.1 If not complete, return document and case file to submitter.

3.16.2 Enter the TrackWise USQ (D or Categorical Exclusion) number in EDMS, as applicable.

NOTE 1: *Documents requiring CBFO or DOE-ID review and approval cannot be issued pending that approval unless written authorization to proceed has been received from the customer. Authorization to proceed or the approval letter must be in the case file prior to implementation.*

NOTE 2: *EDMS automatically provides notification of all DCRs processed within 24 normal working hours via the AMWTP home page.*

3.16.3 Update EDMS with the appropriate DCR, case files, and updated documents.

3.16.4 Complete Blocks 20 and 21 of the DCR per the DCR instructions.

3.16.5 Close the document case file, ensuring all applicable case file materials are in evidence.

(QAPP-01; QAP-103)

3.16.6 Line Management: Communicate to appropriate personnel at a pre-shift briefing, pre-job briefing, tailgate, or similar method, important information regarding changed or revised procedures AND the need to read and sign the required reading items.

(LST-COPS-01-IM, Para 2.p. [5] a; MP-COPS-9.12)

3.16.7 Document Control: If the document is WIPP-related, provide an information only notification and an electronic copy of the document to CBFO at the following e-mail address: site.documents@wipp.ws.

3.16.8 Initiate hard copy distribution using the transmittal form that is created through the data entry process in EDMS.

3.16.8.1 If EDMS is not available, use Form-1004 to distribute the document to controlled copy holders.

3.16.9 Use yellow paper and stamp “Controlled Copy” on the title page of each controlled document.

3.16.10 Distribute the controlled copies and updated controlled location index to appropriate controlled locations within 24 normal working hours.

(QAPP-01; QAP-103)

NOTE: *Online course 0AWT1091, Updating Controlled Copies, is the current training.*

3.16.11 Controlled Location Personnel: Ensure training for updating and maintaining controlled copies is current.

3.16.12 Ensure controlled copy manuals are updated per the instructions on the transmittal form.

(QAPP-01; QAP-103)

NOTE: *It is preferred that the transmittals are acknowledged by returning signed transmittal forms to Document Control.*

3.16.13 Document Control: If a transmittal acknowledgement is returned, log the transaction into EDMS.

3.16.14 Upon receipt of an approved document suspension, cancellation, or suspension update the DCR status in EDMS.

3.16.14.1 Instruct the controlled copy location personnel to discard the canceled, suspended, or superseded document, if necessary.

3.16.15 Document Owner/SME: Ensure that changes to controlled documents are implemented on the effective date of the changed document and notify personnel within their span of organizational responsibility when changes have been made to controlled documents.

3.16.16 Document Control or QA: Perform an annual assessment of all controlled copy locations to ensure updates are being maintained.

4.0 DEFINITIONS

Acceptable Knowledge reports. TRUW reports submitted to CBFO for review and approval which include AK summaries as part of new and revised Waste Stream Profile packages and AK sampling reports.

Bluesheet. Mechanism using a XXX-BLUESHEET-## designated document to implement changes determined to be global (i.e., applicable across organizational, functional, or operational boundaries) until such a time as the affected documents can be changed during a normal revision. The bluesheets must be reviewed and approved per MP-DOCS-18.4 process, upon which the EDMS system is used to link approved bluesheets to affected documents until they are revised.

Canceled. When a document is canceled, the document cannot be reinstated. It is permanently removed from active status on EDMS.

Case file. A packet containing all pertinent information documenting the change from one revision to the next, including any or all, as appropriate:

- Completed DCR
- Completed Form-1002
- Completed Form-1003/red-line comments
- External concurrence/approval correspondence or comments, as applicable
- Completed Form-1728.

This packet of information will increase as the document moves through the development process and is controlled by Document Control when a revision is finalized and issued.

Controlled copy. A paper copy version of a controlled document that is under configuration management, and as such, has a specific number, distribution, and copy location and owner. Controlled copies are stamped CONTROLLED and assigned to specific location, and individuals when appropriate, for tracking purposes.

Controlled documents. Any document, such as a procedure, form, instruction, plan, report, etc., that requires revision control and is maintained and released for use in a controlled manner.

Controlled location personnel. Personnel working in the same area of established controlled copy locations as documented in EDMS who are responsible to update controlled copy manuals with transmitted revisions.

Document revision. A change that results in a re-typed and re-issued edition of the document that is taken to the next revision level upon issuance.

Effective date. The date the document is valid for use.

Electronic Document Management System. Integrated document management software system used to track and store electronic documents and/or images of paper documents. Capable of keeping track of document revisions for history tracking and is the AMWTP standard for automating configuration management process.

External documents. Documents received for operational use at AMWTP from external sources. Except for those implemented through the Work Control Program, these documents receive a DCR upon receipt at Document Services. Operations documents (e.g., CCP documents) used to direct task-based activities are subject to internal review, USQ evaluation, and approval prior to being released for Operations use. Other external documents (e.g., DOE-XXXX) intended for Operations use are issued a DCR for tracking directly to the USQ evaluation. Documents approved by other DOE Area Offices are subject to the USQ evaluation only.

Field change. An immediate change to an operations or maintenance instruction for:

- An unanticipated operational and/or maintenance condition that might stop work or cause it to be unreasonably delayed
- Needed for immediate corrective actions
- Implementing a simple process improvement as directed by the document owner and does not introduce new hazards that have not been previously addressed.

Hazard assessment. Hazard assessments are used to identify hazards and mitigation measures that will be incorporated in the applicable training, work control document/operating procedure.

Justification. The driver supporting a proposed change to a document. A justification may include, but not be limited to, such items as:

- External audit finding, observation, or recommendation
- Internal Root Cause Analysis corrective action
- Corrective action report resolution
- Management assessment report AI
- Other AI
- Integrated Safety Management System (ISMS)-related change
- JHA information update
- Safety Basis change (DSA or TSR)
- External requirement-driven change (WIPP, NNSS, etc.), ISMS implementation
- Management Observation Program determination
- Lessons Learned (including post-job briefs)
- Accurate references

- Precaution or Limitation change
- Prerequisite action change
- Process or equipment change
- Method change or correction
- Work location change
- Qualification change.

Knowledgeable reviewer. An individual who has requisite knowledge to determine the technical adequacy of the document for its identified/intended purpose.

Line management. Supervisors or managers, typically in operations or plant management roles, who authorize or approve work in AMWTP areas (i.e., can be considered to be in an "ownership" position in an AMWTP area).

Minor change. Editorial changes that correct grammar, spelling, page or section numbers, organizational titles (but not responsibility changes), schedules (non-quality affecting changes), forms (but not changes to the intent of the form or any that contain embedded software formulas), references (add, correct, or modify) or attachments that are representative (i.e., for example only). Changes that affect step sequences, step tiering, or the technical content of the document are not minor changes.

NNSS-related documents. Documents that may affect NNSS waste acceptance criteria and are listed on LST-LLW-03. New documents or changes to NNSS-related documents require NNSS WCO review and approval on the document/changes. All forms related to procedures listed on LST-LLW-03 require NNSS WCO review and approval on the document changes. Forms are not listed in LST-LLW-03, only the driving procedures, as applicable.

PAIT-related documents. Documents that may affect WTS, the Polytron Version Control System, or other software/hardware and are listed on LST-PAIT-01. New documents or changes to PAIT-related documents require PAIT review and approval on the document/changes.

Periodic reviews. A review conducted by the document owner or designee, at defined intervals, which considers all aspects of a document's content to ensure continued accuracy. Periodic reviews may be accomplished through a documented validation or during the revision process, and must be indicated on the DCR.

Procedure. Any document used for the purpose of directing or prescribing process requirements, responsibilities, and activities. Procedures are approved for use and required for performance of any AMWTP quality affecting activity.

Reference documents. Documents that are used as reference material. This material is used to document a specific activity, condition, or analysis.

Characteristics of reference documents are:

- Not implementing documents or procedures
- Not activity- or task-directing instructional documents
- Not subject to periodic review
- May be archived as a record per MP-DOCS-18.2, Records Management, directly after issuing.

Examples of reference documents include, but are not limited to:

- Implementation plans for project initiatives
- Position or white papers
- Condition or status-reporting documents for management use or for submittal to customers.

Reinstatement. If a document has been suspended or superseded, the document may be reinstated with the revision number being elevated to the next revision number from the time the document was superseded or suspended.

Requester. Any employee who is identified in EDMS that has requested a change to a controlled document.

Significant comments. A knowledgeable reviewer's written response that is derived from the knowledgeable reviewer's area of expertise or discipline or that addresses content assigning tasks to the knowledgeable reviewer's organization. Significant comments address issues of: (a) noncompliance with laws, regulations, permits, standards, or implementing procedures; (b) proper conduct of mission-critical operations; (c) creating unsafe conditions that could result in personal injury, death, damage to the environment; or (d) creating conditions that could result in a contract change or deviation from a contractual obligation. Comments that are not standard-, requirement- or safety management-based are not considered significant.

Subject matter expert. A person assigned by the responsible manager to a system, program, project, discipline, equipment, or other topic, who has knowledge and relevant expertise.

Supersede. Replace existing document function or scope with another document. The replacement is annotated in EDMS for the purpose of providing a trail in the case of other document references.

Suspended . A document that is temporarily withdrawn from authorized use.

Temporary operating instruction. Procedures developed for conducting non-routine work, one-time only work, and work development activities (e.g., recovery of severely degraded boxes, system operational testing) as identified in the scope of the document. Temporary operating instructions (new or revised) are subject to the complete document change control process. When activities have been adequately developed, documented, and approved, revisions to existing procedures will be initiated, or new procedures will be created and issued.

USQ evaluations. Evaluations required by 10 CFR 830, Nuclear Safety Management, and performed using MP-NSPC-3.2 to determine whether a proposed change or a discrepant as-found condition is bounded by the AMWTP Safety Basis.

USQ only. Other external documents (e.g., DOE-XXXX) that are intended for operational use and are issued a DCR for tracking directly to the USQ evaluation. Documents approved by other DOE Area Offices are subject to the USQ evaluation only.

Validation. A physical process that confirms usability of an instruction or draft instruction. Validation confirms, either through limited field use, a walkdown, mockup, or tabletop analysis, that the intended user can perform the procedure instructions exactly as written. Validation methods are:

- *Limited field use validation*: A qualified user performs all procedure steps using the specified equipment, systems, and material at the actual work location, or using models or mockups of equipment and workspaces. This process requires USQ applicability review or a USQ evaluation, RCRA, and training evaluations to maintain the facility safety basis.
- *Mockup validation:* Use of models or mockups of equipment and/or work spaces performed outside of process areas/buildings. Mockup validations shall not be performed on in-process equipment or on radioactively contaminated waste.
- *Walkdown validation*: For use by ACL personnel only, qualified lab personnel walk through all procedure steps using the specified equipment, systems, and material at the actual work location, or using models or mockups of equipment and workspaces.

- *Tabletop validation*: A qualified user evaluates the technical content, structure, organization, and language of each procedure step. During a tabletop validation, users "talk through" the procedure to indicate when, where, and how they would perform each step.

The extent of validation can also vary. The two basic validation extents are:

- *Complete validation:* Any of the validation methods are used to validate the entire procedure. All sections of the procedure are considered, including roles and responsibilities, precautions and limitations, prerequisites, procedure steps, etc. New procedures and revisions considered to be a rewrite must have a complete validation.

- *Partial validation:* Any of the validation methods are used, but the validation is limited to specific portions of the procedure that are impacted by a limited scope modification. Only procedures with modifications identified by strikeouts and sidebars can be partially validated. New procedures and revisions considered to be a rewrite cannot be partially validated.

WIPP-related documents. Documents that specify requirements, prescribe processes, or establish requirements important to the compliance application, waste characterization, repository performance assessment, waste isolation, waste transportation, nuclear safety, environmental protection, and management and operation of the WIPP facility. Waste Isolation Pilot Plant-related documents are listed in LST-Q&SI-01 and may require CBFO review and approval on any changes made to them.

(DOE/CBFO-94-1012 Section 1.4)

Working copy. A white copy of a procedure that has been photocopied from a controlled copy manual (yellow) or downloaded from EDMS and verified that it is the latest approved revision, with applicable FCs, on a daily basis but prior to performing the work.

5.0 REFERENCES

(1) ANSI/ANS-8.19-2005, Administrative Practices for Nuclear Criticality Safety

(2) 10 CFR 830, Nuclear Safety Management

(3) AMWTP HWMA/RCRA Permit

(4) CTR-011, Plant Review Committee Charter

(5) DOE/CBFO-94-1012, Quality Assurance Program Document, U.S. Department of Energy, Carlsbad Area Office, Carlsbad, New Mexico

(6) DOE O 150.1, Continuity Programs

(7) Form-1948, Onsite Hazardous Services Statement of Work (SOW)

(8) INST-CD&M-11.1.2, Facility Modification Proposal Preparation

(9) INST-CD&M-11.1.4, Temporary Physical Changes

(10) INST-CD&M-11.2.3, System Data Change Request

(11) INST-CD&M-11.2.5, Integrated Control System Software Modifications

(12) INST-CD&M-11.2.6, Temporary Software Override

(13) INST-CMNT-10.1.4, Maintenance Instructions

(14) INST-CMNT-10.1.6, Method Statement

(15) INST-COPS-9.18.1, Approved Method of Work

(16) INST-COPS-9.18.2, Permit to Work

(17) INST-COPS-9.18.4, Hazard Assessment

(18) MP-COPS-9.18, Work Management, Planning, and Control

(19) INST-COPS-9.18.4, Hazard Assessment

(20) LST-COPS-01-IM, Conduct of Operations Implementation Matrix

(21) LST-LLW-03, NNSS Procedure Review List

(22) LST-NSPC-02, Document Series and Types Exempted from the USQ Process

(23) LST-PAIT-01, WTS/PVCS Affected Procedures and Forms

(24) LST-Q&SI-01, WIPP Procedure List

(25) MP-ADMN-1.18, Requirements Management

(26) MP-CD&M-11.1, Change Control

(27) MP-CD&M-11.2, Software Quality Assurance

(28) MP-CD&M-11.8, Equipment and Process Tests/Investigations

(29) MP-COPS-9.12, Required Reading

(30) MP-COPS-9.14, Operations Procedures

(31) MP-COPS-9.18, Work Management, Planning, and Control

(32) MP-DOCS-18.1, Developing Written Work Instructions

(33) MP-DOCS-18.2, Records Management

(34) MP-DOCS-18.3, Developing Management Procedures

(35) MP-DOCS-18.6, Developing Abnormal Operating Instructions

(36) MP-DOCS-18.8, Developing Analytical Chemistry Methods

(37) MP-DOCS-18.9, Developing Analytical Chemistry Laboratory Procedures

(38) MP-PCMT-15.1, Acquisition of Material and Services

(39) MP-NSPC-3.2, Unreviewed Safety Question Process

(40) MP-TRUW-8.1, Certification Plan for INL Transuranic Waste

(41) MP-TRUW-8.2, Quality Assurance Project Plan

(42) PD-ISM-01, Integrated Safety Management System Program Description

(43) PD-LLW-02, Nevada National Security Site Waste Certification Program Plan

(44) QAPP-01, Quality Assurance Program Plan

(45) QAP-103, Analytical Chemistry Laboratory Quality Assurance Plan

(46) RPT-DSA-02, Documented Safety Analysis

(47) RPT-TSR-03, Technical Safety Requirements

(48) Toxic Substance Control Act

6.0 RECORDS

Records generated by this procedure are classified in accordance with the table below and dispositioned in accordance with MP-DOCS-18.2, Records Management.

Record Description	Classification
MP-DOCS-18.4, Case File	Nonpermanent WIPP/ENV1-J-1/ Destroy 10 years after submittal
Records generated per this procedure but are contained in case files for each specific controlled document (as applicable): • Form-1001, Document Change Request • Form-1002, Procedure Validation Request • Form-1003, Review Comment and Resolutions Form • Any redlines and e-mail comments, concurrences, and e-signatures • Form-1004, Document Transmittal • USQ Evaluator communications • Form-1728, Document and Case File QC Checklist	Determined by the specific document case file.

7.0 EXHIBITS

None

8.0 APPENDICES

Appendix A –Reviews Required for New and Revised Controlled Documents
Appendix B – Document Series Identifiers and Types
Appendix C – Documents Requiring DOE-Idaho Review and Approval

Appendix A –
Reviews Required for New and Revised Controlled Documents

Changes to documents, other than those defined as editorial changes, shall be reviewed and approved by the same organizations that performed the original review and approval, unless other organizations are specifically designated in accordance with approved procedures.

The following matrix identifies the minimum functional reviews for the required knowledgeable reviewers (reference Block 9 of the DCR). Reviews may be delegated to technically competent personnel within that functional organization. Document owners are identified in EDMS. Signature authority delegation for document owners is managed via formal correspondence signed by the document owner for long-term delegations. Short term delegation of signature authority is provided via electronic notifications.

Documents that are new or NNSS-/WIPP-/PAIT-related and listed on LST-LLW-03, LST-Q&SI-01, or LST-PAIT-01 will receive the required NNSS WCO, SPM or PAIT reviews through the DCR process independent of the required knowledgeable reviewers listed below.

DOCUMENT TYPES Forms require same review as the implementing document	**ES&H**	**Ops (NUC OPs [NFM])**	**QA**	**Criticality (CS)/ Nuclear (NS) Safety**	**Eng.**	**Maint.**	**Waste Prog. * (TRU, ACL, LLW/MLLW, TRNS, All)**
Implementation Matrices (Requirements) except those required for the safety basis	Document Owner						
Charters	Review by committee members for which the Charter was created						
Project Execution Plan (PEP), Project Management Plan (PMP), ISMS Description Document	Senior Management**						
Program Descriptions (PD)	Senior Management or Designee **						
Company Level Policies (POL)	Project Manager, Legal, and appropriate Sr. Functional Manager, as determined by Project Manager						

* Waste Programs KEY: TRU=TRU Programs; ACL=Analytical Chemistry Laboratory TRNS = Transportation

** Senior Management is defined as organization manager directly reporting to the President & Project Manager.

***ACL Required Reviewers are the Laboratory Lead and Laboratory QA Officer. The Laboratory SME is also required for laboratory-specific documents.

AMWTP MANAGEMENT PROCEDURE		
MP-DOCS-18.4, Rev. 39	Issued: 02/06/14	Effective: 02/07/14
Document Control		

DOCUMENT TYPES Forms require same review as the implementing document	ES&H	Ops (NUC OPs [NFM])	QA	Criticality (CS)/ Nuclear (NS) Safety	Eng.	Maint.	Waste Prog. * (TRU, ACL, LLW/MLLW, TRNS, All)
GENERAL ADMINISTRATIVE & HUMAN RESOURCES (ADMN unless otherwise noted)							
Human Resource related	Project Manager and Legal						
Project/Production Planning (PROJ/PRPL)			●	Both			TRU
Performance, Measurement, Analysis and Reporting, Project Controls, Cost & Schedule, EVMS related	Senior Management or Designee*						
Communications, Tours/Visits, Identity and Logo Use related	●			CS			
Information Management and Data Security (PAIT)		●	●	Both			ALL
Plant Automation/Software (CD&M [11.2 Series Only]/PAIT)		●	●	Both	●	●	TRU
Accounting, Payroll, and Travel related (**except** Forms)	Senior Management or Designee**						
Accounting, Payroll, and Travel related Forms	Determined by the document owner						
Procurement, Property, Vehicle related (PCMT)	●		●	CS	●	●	
Requirements Management	Document owner with input from requirement owners						
Training (RTQP)		● (for Operations/ Plant)	●	*Additional knowledgeable reviewers as determined by Training based on affected program.*			
Documents and Records (DOCS) * *Additional knowledgeable reviewers as determined by Document Services based on affected program.*		●	●	Both			ALL
Plans, Reports, Guides, and Lists applicable to the above functional area/organization only	Determined by the document owner (include affected process owners and SMEs)						

* Waste Programs KEY: TRU=TRU Programs; ACL=Analytical Chemistry Laboratory TRNS = Transportation

** Senior Management is defined as organization manager directly reporting to the President & Project Manager.

***ACL Required Reviewers are the Laboratory Lead and Laboratory QA Officer. The Laboratory SME is also required for laboratory-specific documents.

DOCUMENT TYPES Forms require same review as the implementing document	ES&H	Ops (NUC OPs [NFM])	QA	Criticality (CS)/ Nuclear (NS) Safety	Eng.	Maint.	Waste Prog. * (TRU, ACL, LLW/MLLW, TRNS, All)
OPERATIONS							
Safety Basis Documents (DSA/TSR/NFCS), RCRA Permit, etc., and corresponding implementation matrices	●	●	●	Both	●	●	Waste Program Rep.
Operating instructions (OIs, FOIs, AOIs, &TOIs)	●	●	● except AOIs	Both	●	●	TRU, LLW/MLLW
Conduct of Operations (COPS) **except** Transportation Documents		●	●	Both	●	●	ALL
Operations (OPS) Plans (PLN), Reports (RPTs), Guides (GDE) and Lists (LST) not designated as reference documents.	Determined by the document owner (include the affected process owners and SMEs)						
Plans, Reports, Guides, and Lists applicable to Operations only (For LST-COPS-01-IM, Technical Publications Lead is a required reviewer)	Determined by the document owner (include affected process owners/SMEs)						
ENV AND ES&H							
Emergency (EP&C) Procedures and Instructions	●	●	●	Both			
Security (SCTY) Procedures	●	●	●	Both			
Security (SCTY) Instructions	Security Only						
Emergency Planning for Off-site Facilities	●		●				
Radiological Control (RS&C)	●	●	●	Both		●	
Environmental Compliance/Permitting (EC&P)	●	●	●	Both		●	ALL
Industrial, Convention Safety, Health & Hygiene, and Fire Protection (ISIH) and ALL Fire Hazard Analyses (FHAs)	●	●	●	Both		●	
Plans, Reports, Guides, and Lists applicable to ES&H only	Determined by the document owner (include affected process owners/SMEs)						
Continuity of Operations (COOP) documents	Determined by the document owner (include affected process owners/SMEs)						

* Waste Programs KEY: TRU=TRU Programs; ACL=Analytical Chemistry Laboratory TRNS = Transportation

** Senior Management is defined as organization manager directly reporting to the President & Project Manager.

***ACL Required Reviewers are the Laboratory Lead and Laboratory QA Officer. The Laboratory SME is also required for laboratory-specific documents.

DOCUMENT TYPES Forms require same review as the implementing document	ES&H	Ops (NUC OPs [NFM])	QA	Criticality (CS)/ Nuclear (NS) Safety	Eng.	Maint.	Waste Prog. * (TRU, ACL, LLW/MLLW, TRNS, All)
MAINTENANCE							
Work Control Documents (COPS) (***For MP-COPS-9.18, Procurement is a required reviewer.***)	●	●	●	Both	●	●	ALL
Conduct of Maintenance Procedures (CMNT) and Instructions	●	●	●	Both	●	●	
Plans, Reports, Guides, and Lists applicable to Maintenance only	Determined by the document owner (include affected process owners/SMEs)						
ENGINEERING							
Engineering, design control, change control, and configuration management documents (CD&M) **except** software, system automation, or information technology related.	●	●	●	Both	●	●	
Plans, Reports, Guides, and Lists applicable to Engineering only	Determined by the document owner						
NUCLEAR AND CRITICALITY SAFETY							
Nuclear Safety Process & Control (NSPC) and Criticality Safety (NFCS)		●	●	Both			
Plans, Reports, Guides, and Lists applicable to Nuclear Safety/Criticality Safety only (except as stated in the Operations section)	Determined by the document owner						

* Waste Programs KEY: TRU=TRU Programs; ACL=Analytical Chemistry Laboratory TRNS = Transportation

** Senior Management is defined as organization manager directly reporting to the President & Project Manager.

***ACL Required Reviewers are the Laboratory Lead and Laboratory QA Officer. The Laboratory SME is also required for laboratory-specific documents.

DOCUMENT TYPES Forms require same review as the implementing document	ES&H	Ops (NUC OPs [NFM])	QA	Criticality (CS)/ Nuclear (NS) Safety	Eng.	Maint.	Waste Prog. * (TRU, ACL, LLW/MLLW, TRNS, All)
QUALITY ASSURANCE							
WIPP Procedure List (LST-Q&SI-01)			●				TRU
Management and Independent Assessment (M&IA)	●		●	CS	●	●	ACL
Quality Assurance procedures and Instructions (Q&SI)	●		●	CS	●	●	ACL
Quality Assurance Program Plan (QAPP)		Plant Manager	●	Both			ALL
Quality Assurance Project Plan (QAPjP) (MP-TRUW-8.2)			●				TRU
Plans, Reports, Guides, and Lists applicable to Quality Assurance only	Determined by the document owner (include affected process owners/SMEs)						
WASTE PROGRAMs							
Analytical Chemistry Lab procedures and instructions (ACLP, ALAB, ACMM)	WS		●	Both (MP-ACLP-24.1, and ALAB Only)		Responsible Manager (ALAB Only)	ACL***
Low Level Waste Management procedures and instructions (LLW)	●		●	Both			ALL
Transportation Program Procedures (TRNS/COPS)	●		●	Both			TRU/TRNS
TRU Program procedures and instructions (TRUW)			●	Both			TRU, LLW/MLLW, TRNS
TRU Program plans, lists, and reports (TRUW)	WS		●	Both			TRU
Waste Management & Minimization on (WM&M)	●		●	Both			ALL
Plans, Reports, Guides, and Lists applicable to any of the Waste Programs only	Determined by the document owner (include affected process owners/SMEs)						

* Waste Programs KEY: TRU=TRU Programs; ACL=Analytical Chemistry Laboratory TRNS = Transportation

** Senior Management is defined as organization manager directly reporting to the President & Project Manager.

***ACL Required Reviewers are the Laboratory Lead and Laboratory QA Officer. The Laboratory SME is also required for laboratory-specific documents.

DOCUMENT TYPES Forms require same review as the implementing document	ES&H	Ops (NUC OPs [NFM])	QA	Criticality (CS)/ Nuclear (NS) Safety	Eng.	Maint.	Waste Prog. * (TRU, ACL, LLW/MLLW, TRNS, All)
EXTERNAL DOCUMENTS (NOTE: *Minor changes require STR and USQ approval only.)*							
CCP Documents	●	●	●	Both			TRU ***
CCP AK Reports & Waste Stream Profile				Both			TRU
DOE-approved documents	*USQ ONLY* (see def.)						
Other External Documents	Determined by application and scope						

* Waste Programs KEY: TRU=TRU Programs; ACL=Analytical Chemistry Laboratory TRNS = Transportation

** Senior Management is defined as organization manager directly reporting to the President & Project Manager.

***ACL Required Reviewers are the Laboratory Lead and Laboratory QA Officer. The Laboratory SME is also required for laboratory-specific documents.

Appendix B –
Document Series Identifiers and Types

The following list is a tool to be used for determining document identifiers but may not be all inclusive. Updates to this list will occur during normal revisions. Contact Document Control for assistance.

Document Series

ACLP-24.0	Analytical Chemistry Laboratory Procedures
ADMN-1.0	General Administration & Human Resources
ALAB-25.0	Analytical Laboratory (facility)
CD&M-11.0	Control of Design and Modification
CMNT-10.0	Conduct of Maintenance
COOP-0X	Continuity of Operations
COPS-9.0	Conduct of Operations
DOCS-18.0	Documents and Records
EC&P-7.0	Environmental Compliance and Permitting
EP&C-12.0	Emergency Planning and Control
ISIH-2.0	Industrial, conventional Safety, Health and Hygiene
LLW-19.0	Low Level Waste Management
M&IA-17.0	Management & Independent Assessment
OI/FOI/AOI/TOI/ ACMM/ACLP	Operating Instruction/Facility Operating Instruction/Abnormal Operating Instruction / Temporary Operating Instruction/ Analytical Chemistry Methods/Analytical Chemistry Laboratory Procedures
NFCS-4.0	Nuclear Facility Criticality Safety
NSPC-3.0	Nuclear Safety Process and Control
PAIT-21.0	Plant Automation/Information Technology
PASS-26.0	Performance Assurance
PCMT-15.0	Procurement
PROJ-23.0	Project Management
PRPL-22.0	Project & Production Planning
Q&SI-5.0	Quality & Safety Improvement
RS&C-6.0	Radiological Control & Safety
RTQP-14.0	Training and Qualification of Personnel
SCTY-16.0	Security
TRNS-20.0	Transportation
TRUW-8.0	TRU Waste Management
WM&M-13.0	Waste Management & Minimization

Document Types (normally used in conjunction with the above)

NOTE 1: *Templates referred to in this section are available from Document Services*.

NOTE 2: *Not all documents currently conform to the following document designator format or templates but will be corrected as they are revised***.**

DOC TYPE	DESCRIPTION/DEFINITION	STANDARDS/TEMPLATES DOC DESIGNATOR FORMATS
BLUESHEET	Document used for applying global (project-wide) changes determined to be minor per the definition in Section 4.0. Examples are: title changes, company name changes, or global reference changes. Also includes documents used for applying specific change necessary for contractor transition which are supplied by the incoming contractor.	The MP template is applied for headers and footers but sections can be adjusted as necessary. MP-DOCS-18.3 does not apply. Designator: XXX-BLUESHEET-## (using acronym appropriate for functional area)
CTR	Charter - Explains the functions, operating principles, membership and responsibilities of a committee or working group. Although these are controlled documents governed by the DCR process, the document designator for charters does not contain a series identifier since the groups usually consist of personnel from multiple functional areas and/or organizations.	The RPT template is applied, sections are modified as appropriate. Designator: CTR-###
FAC-SD	Treatment Facility System Description – Reference documents only – Legacy facility system descriptions, once controlled documents, but canceled and retained for their historical information.	Designator: FAC-SD-##
FORM	Form – Provides blank fields for standardized data collection and/or indicates completion of work. Used for INST sign-offs when required and are submitted as completed records per MP-DOCS-18.2 when required.	FORM template, either portrait or landscape as appropriate. Designator: FORM-####
GDE	Guide - Suggests work methods or provides additional information that users apply at their discretion. Information in a guide can be controlled via the DCR process if subject to revision but it is not enforceable or auditable. Document type designators are combined with series identifiers for controlled documents or left by themselves for reference/one-time-use documents.	The RPT template should be applied; sections can be modified as appropriate. Designators: Controlled: GDE-(*Series*)-## Reference: GDE-###
IAG	Interface Agreement – Reference document only - Agreements which describe functional relationships and assigns responsibilities between AMWTP and external companies/projects.	As written. Designator: IAG-###

DOC TYPE	DESCRIPTION/DEFINITION	STANDARDS/TEMPLATES DOC DESIGNATOR FORMATS
INST	Instruction - Provides specific direction and detail for performing hands-on step-by-step technical tasks. Instructions incorporate appropriate information from documentation such as facility design documents, facility safety analysis, hazard analyses, field sampling documents and technical safety requirements. Instructions include but are not limited to: • Operating instructional procedures (OI, FOI, AOI, TOI) • Analytical Chemistry Laboratory instructional procedures (ACMM, ACLP, ALAB) • Functional area instructional procedures (ex: ISIH, RS&C, SCTY, etc.) • Maintenance and test instructional procedures (ex: CMNT) • Software and System instructional procedures (ex: CD&M).	MP-DOCS-18.1; MP-DOCS-18.8, MP-DOCS-18.9 INST Template Required **NOTE:** *The first digit (of 3) in the INST-ACLP/ACMM document IDs are derived from an analysis type or laboratory function and are assigned by the ACL QA Officer. The next two digits are consecutive only and are assigned by Document Control.* Designators: Operations: INST-XXX-## ACL: INST-ACMM/ACLP-### INST-ALAB-## All Others: INST-(*Series*)-#.#.# **NOTE:** *INST-MI-#### documents are exempt from the DCR process but are controlled per INST-CMNT-10.1.4.*
LST	List - Provides a catalog or roster of items that share common characteristics. Examples include requirement implementation matrices, waste lists, etc. Lists do not provide work instruction and only implement requirements in so much as the requirement is to list or provide a list.	The RPT template is applied; sections can be modified as appropriate. Designator: LST-(*Series*)-## (if implementation matrix, add "-IM" to end of designator)
MP	Management Procedure - Establishes methods for administratively implementing and integrating requirements, specifying roles and responsibilities for performance, as well as providing a standard for conducting business. An MP may be appropriate when describing programmatic execution or implementation of requirements, company objectives, and/or policies.	MP-DOCS-18.3 MP Template Required Designator: MP-(*Series*)-#.#
PD	Program/Process Description - Describes the management basis and broad boundaries for how a program or process operates and interfaces.	The RPT template should be applied; sections can be modified as appropriate. Designator: PD-(*Series*)-##

DOC TYPE	DESCRIPTION/DEFINITION	STANDARDS/TEMPLATES DOC DESIGNATOR FORMATS
PLN	Plan - Provides a method or approach documenting strategies for achieving defined objectives, goals, work criteria, boundaries, etc. Plans do not provide activity based work direction and combined with objective evidence proving completion of those strategies, are usually submitted as completed records per MP-DOCS-18.2. In these cases, the plans are reference documents. Plans generated to comply with DOE directives (i.e. Security or Emergency Plans, etc). are subject to revision, therefore controlled, and the DCR process applies.	The RPT template should be applied; sections can be modified as appropriate. Designators: Controlled: PLN-(*Series*)-## Reference: PLN-###
POL	Policy – With the exception of ACL-specific policies, POLs contain executive management-level directives and/or core management values that reflect internal company requirements expected to be followed by company personnel and subcontractors.	The RPT template should be applied; sections can be modified as appropriate. Designator: POL-###
RPT	Report - Collects and records the results of engineering, technical or administrative activities, evaluations, or analyses. Also includes AK Summaries and TRU Sampling Reports. Depending on the content and intent of the report, the document can be a reference or one-time-use document. If the document is subject to revision, it must be a controlled document and the DCR process will apply.	The RPT template is applied; sections are modified as appropriate, except for TRUW reports. TRUW reports must use the established template: REPORT Template_TRU.dot Designators: Controlled: RPT-(*Series*)-## Reference: RPT-###
SOW	Statement of Work – EDMS reference document only - Required by MP-PCMT-15.1, Acquisition of Material and Services; and developed for use with purchase requisitions and subcontracts. SOWs contain work overview and background, scope of work, technical requirements/tasks, expected deliverables, and applicable site rules and regulations.	DCR process not applicable, but use of Form-1948, Onsite Hazardous Services Statement of Work (SOW) required. Designator: SOW-###
SRM	Subcontractor Requirements Manual - Established to ensure a consistent and controlled method of providing requirements for subcontractors and direct-hire craft as they perform work at AMWTP. Program applies to subcontractors that provide services to AMWTP. The subcontract or other procurement documents govern the work performed.	The SRM contains various document types; the format/standard and templates from above are applied as appropriate. Designators: PD-SRM-01 LST-SRM-01 SRM-(*Series*)-#.#

Appendix C –
Documents Requiring DOE-Idaho Review and Approval

Submittal of the following list of documents must have President and Project Manager concurrence and be submitted under the signature of the Project Manager or Contract and Logistics Manager to the DOE Contracts Office.

NOTE: *Due to changing requirements, there may be additions or deletions to this list that will be included in the next revision.*

Procedure	Title	Source Requirement
PLN-ADMN-02	Risk Management Plan	DOE/AMWTP Contract
LST-COPS-01-IM	Conduct of Operations Implementation Matrix	DOE O 422.1
MP-COPS-9.16	Startup and Restart of Nuclear Facilities	DOE O 425.1D
PLN-EP&C-03	AMWTP Emergency Plan/RCRA Contingency Plan	DOE O 151.1C
MP-ISIH-2.7	Chronic Beryllium Disease Prevention Program (significant changes only as determined by document owner)	10 CFR 850
MP-NSPC-3.2	Unreviewed Safety Question Process	10 CFR 830
MP-PCMT-15.8	Property Management Program Procedure (significant changes only as determined by document owner)	DEAR 970.5204-21
MP-RTQP-14.20	Training Implementation Matrix	DOE O 426.2
MP-RTQP-14.3	Exceptions and Exemptions to Training, Qualification, and Certification	DOE O 426.2
PD-CMNT-01	Nuclear Maintenance Management Program Description	DOE O 433.1B
PD-ISIH-06	Worker Safety and Health Program	10 CFR 851
PD-ISM-01	Integrated Safety Management System Description Document	DOE M 450.4-1
PD-NFCS-01	Nuclear Criticality Safety Program	DOE O 420.1B
PD-Q&SI-01	Contractor Assurance Program	DOE O 226.1
PD-RS&C-01	Radiation Protection Program	10 CFR 835

Procedure	Title	Source Requirement
PLN-PAIT-004	AMWTP Certification and Accreditation System Security Plan	DOE O 205.1A
PLN-SCTY-16.9	Material Control and Accountability Plan	DOE M 470.4-6
QAPP-01	Quality Assurance Program Plan	10 CFR 830 DOE O 414.1C
RPT-DSA-02	Documented Safety Analysis	10 CFR 830
RPT-EP&C-01	Emergency Planning Hazards Survey	DOE O 151.1C
RPT-EP&C-02	Emergency Planning Hazards Assessment	DOE O 151.1C
RPT-PEP-01 RPT-PMP-01	Project Execution Plan/Project Management Plan (if required by contract modification)	DOE/AMWTP Contract
RPT-TSR-03	Technical Safety Requirements	10 CFR 830
PLN-COOP-01	Continuity of Operations Plan	DOE O 150.1

Management Assessment

Advanced Mixed Waste Treatment Project

(Signature on file. See DCR-10556.)
Angie Morse
Quality Assurance Engineer

09/12/12
Date

REVISION LOG

Revision Number	Date Approved	Pages Affected	Description of Revision
0	8/15/02	All	DCR-1346. Initial issue, this management procedure supersedes PQP 9.1 Revision 2.
1	12/2/02	All	DCR-1542; Implement Corrective Action Report # 1350, Findings RWC-2002-18.1 and RWC-2002-18.2. Implement Action Item # 1463. Incorporate TrackWise® instructions.
2	02/18/03	Pg. 12, section 4.0, step-4.3.12, 4.3.13 Pg. 13, section 5.0	DCR-2028. Revised Procedure to incorporate comments resulting from CBFO Adequacy Review (Reference: Letter CBFO:NTP:KWW:VW:03-0247:UFC:5822 received 1/23/03)
3	07/07/03	Pgs.10, 11 &12	DCR-2314. Revised Procedure to incorporate Action Items 2645 & 2646 that resulted from the Corporate ORR. CORR-Finding MG-2.2, Corrective Action Report CAR-2534. Update records section.
4	03/28/05	Pgs. 9, 12, 13, 14, & 15. Various	DCR-4011. Implement Process Improvements for review and closure of Management Assessments. Revised to align with TrackWise® process flow. Editorial/format changes to comply with MP-DOCS-18.3, Management Procedures. Incorporated CBFO comments on Rev 4A received 1/20/05.
5	11/03/05	All	DCR-4455. This revision is a complete rewrite. Procedure was simplified by consolidating content. Global changes were made due to contractor change. Sections were reordered according to MP-DOCS-18.3, Rev. 2.
6	5/8/06	Page 2, 3.1.3; and page 4, 3.2.4 and 3.2.5; and page 8, Section 6.0	DCR-4852. Revision 6 addresses CAR 20489 and Action Item 20731. Rev. 6A updates statement concerning Records generated by this procedure. Rev. 6B incorporates CBFO QAPD requirement 3.1 E. for conducting and reporting management assessments of the AMWTP QA program. Adds Condition Adverse to Quality to Definitions.

Revision Number	Date Approved	Pages Affected	Description of Revision
7	10/24/06	Add Note before 3.5.1 and Appendix A Section 9 Note 4	DCR-5424. Notes to update and improve procedure as a result of NTS audit.
8	04/17/2007	All	DCR-5788. General rewrite for CAR 21730 follow-up improvements and address PAAA Program Evaluation issues. Updated to clarify reporting requirements for conditions adverse to quality and evaluation of reported results. Clarified criteria and method for documenting the development of Department Management Assessment Plans. Removed extraneous definitions not used in the procedure. Added two new appendices providing guidance for use in assessment planning. General editorial changes, maintenance, improvements, and clarifications.
9	05/01/08	All	DCR-6958. Addresses requirements of Action Item 28838, to update the procedure with the criteria used for evaluation of risk associated with areas of assessment.
10	11/05/09	Various	DCR-8609. Revised to identify specific MAR training requirement as required in CAR 45413, Surveillance Report # 44151 and AI 46072. Clarified manager role in documenting MAR review and assigning action items. General editorial changes and improvements.
11	09/12/12	Various	DCR-10556. Revised to update information contained in Appendix C. Incorporate DOCS-BLUESHEET-08 and ITG-BLUESHEET-119.

TABLE OF CONTENTS

1.0 PURPOSE/SCOPE 1

2.0 ROLES AND RESPONSIBILITIES 2

3.0 PROCEDURE 3

3.1 Management Assessment Scheduling 3

3.2 Development of Management Assessment Plans and Review Criteria 6

3.3 Performing, Reporting, and Evaluating Management Assessments 7

4.0 DEFINITIONS 10

5.0 REFERENCES 10

6.0 RECORDS 11

7.0 EXHIBITS 11

8.0 APPENDICES 11

Appendix A - Development of Management Assessment Plans A1

Appendix B - Guidelines for Selection of Assessment Methodology B1

Appendix C - AMWTP Department Organizations C1

Appendix D - AMWTP MAR-2 Flowchart D1

AMWTP MANAGEMENT PROCEDURE		
MP-M&IA-17.1, Rev. 11	Issued: 09/12/12	Effective: 09/13/12
Management Assessment		

1.0 PURPOSE/SCOPE

Management assessments (see def.) provide management with information to evaluate and improve any aspect of the organization. A rigorous and proactive Management Assessment Program is the foundation for effective, efficient management of programs, systems, and work processes, and a key implementing feedback and improvement process of safety management.

The objective of the Advanced Mixed Waste Treatment Project (AMWTP) Management Assessment Program is early identification and correction of deficiencies that could otherwise result in significant issues or events, and to promote continuous improvement.

This procedure describes AMWTP's process and requirements for planning, conducting, reporting, evaluating, and acting on management assessments, and implements requirements for a Management Assessment Program as specified in 10 CFR Part 830, Subpart A, Quality Assurance Requirements; DOE O 414.1C, Quality Assurance; DOE O 226.1A, Implementation of Department of Energy Oversight Policy; DOE-CBFO-94-1012, Quality Assurance Program Document; QAPP-01, Quality Assurance Program Plan; and QAP-103, Analytical Chemistry Laboratory Quality Assurance Plan for Environmental Testing.

2.0 ROLES AND RESPONSIBILITIES

Performer	Responsibilities
Department Managers	• Development of Department Management Assessment Schedules. • Periodically evaluate their organization's functional areas for performance and effectiveness.
Managers at All Levels	• Plan, conduct, and report management assessments. • Participate in the management assessment processes to ensure that results contribute to improved performance of programs, systems, and work processes. • Evaluate results of management assessments. • Identify and implement improvements needed in programs, systems, and processes. • Identify problems and take timely action to correct identified problems. • Ensure all *conditions adverse to quality* (CAQ; see def.) identified through management assessment are evaluated and reported in TrackWise. • Assign *action items* (AI; see def.) to evaluate or implement improvements identified as observations or recommendations as determined by the responsible manager to require follow up. • Ensure assigned actions are completed to resolve CAQ and improve programs, systems, or processes.
Quality Assurance (QA) Manager	• Owns and maintains this procedure. • Periodically assesses implementation and effectiveness of the management assessment program. • Reviews nonconformance and corrective action reports generated during the performance of management assessments.
All Personnel	• Responsible for completing management assessment training if performing management assessments

3.0 PROCEDURE

3.1 Management Assessment Scheduling

3.1.1 Department managers shall periodically evaluate their organization's functional areas for performance and effectiveness in order to identify and correct problems that hinder their organization from achieving its objectives and to identify areas for performance improvement.

(10 CFR 830.122[i])

NOTE 1: *The hierarchy of AMWTP Departments and associated functional areas addressed by this procedure are established in* TrackWise (see def.) *and depicted in Appendix C, AMWTP Department Organizations.*

NOTE 2: *Department Annual Management Assessment schedules are incorporated into an AMWTP Contractor Assurance System Integrated Assessment Schedule*

NOTE 3: *Department Manager shall establish an annual Management Assessment schedule at the end of each calendar year for programs, facilities, systems, processes, services and subcontractor activities for which they are responsible.*

3.1.2 Annual Management Assessment schedules must be developed and prioritized based on hazards, degree of risk, and importance to safety and mission success with consideration for:

- Nature of the facility or activity being assessed, and the hazards and risks to be controlled
- Organizational goals and objectives
- Assessment required by applicable DOE directives or regulatory requirements
- Program Assessments for evaluations of the effectiveness of safety management programs important to worker safety and defense in depth

- System Assessments for evaluation of support systems to enable performance of work
- Process Assessment for evaluation of implementation and adequacy of work processes
- Periodic analysis of the collective results of process assessment.

3.1.2.1 Annual Department Management Assessment Schedules must be documented in TrackWise and identify:

- Assessment Risk Level
- Department and Functional Area to be assessed
- Assessment Level, see Appendix A, Development of Management Assessment Plans
- Responsible Manager
- Assigned Actionee
- Assessment Scope
- Completion Date.

3.1.2.2 The assessment risk level is based on the potential for conditions or events to have consequential affect on Nuclear Safety, Industrial Safety, Environmental Safety, or Program Management. The risk levels are categorized as:

- High: Condition exists or is likely within the contract period that can have direct consequence on worker, public or environmental safety, regulatory compliance, or contract delivery of regulatory milestones.
- Moderate: Condition is possible within the contract period that could have indirect consequence on worker, public or environmental safety, regulatory compliance, or contract performance.

- Low: Condition is possible within the contract period, but has no impact on worker, public or environmental safety, regulatory compliance, or contract performance.

3.1.2.3 Department managers shall ensure the Department Management Assessment Schedule includes a minimum of one management assessment per calendar quarter.

3.1.2.4 Department managers may cancel or reschedule a scheduled assessment based on reevaluation of the hazard, risk, or importance associated with the assessment subject area. Justification for the cancellation or rescheduling of a scheduled assessment must be documented within associated MAR.

3.1.2.5 Department managers may initiate management assessments in TrackWise pending a schedule date to allow for planning flexibility and review for relevance, provided the minimum scheduled assessments noted in Step 3.1.2.3 are met.

NOTE: *Computer based training, AWT4138C, AMWTP TrackWise System, provides a user overview of TrackWise.*

3.1.3 Department management assessment schedules are published in the TrackWise Summary Report link on the AMWTP Homepage.

3.1.3.1 The TrackWise Summary Report provides a readily available access to established Department Management Assessment Plans and does not require login to TrackWise.

3.2 Development of Management Assessment Plans and Review Criteria

NOTE 1: *Appendix A provides information to be utilized based on the level of management assessment to be performed.*

NOTE 2: *Appendix B, Guidelines for Selection of Assessment Methodology, provides information for selecting the most appropriate assessment method.*

Effective management assessments require development of an assessment plan and/or review criteria based on the scope and objective of the assessment, the activity to be evaluated, and the applicable performance requirements.

3.2.1 Managers must ensure that evaluation criteria or expectations are established to help focus the assessment on the goals and objectives of the program, system, or process being evaluated.

3.2.1.1 Using information from Appendix A, develop and document the management assessment plan based on the level of management assessment to be performed and to achieve the scope and objective of the assessment.

3.2.1.2 Management Assessment plans shall be fully described and documented in the TrackWise management assessment report.

3.2.2 In defining performance requirements, managers should use relevant requirements source documents such as:

A. Regulatory Requirements

B. Contract Requirements

C. DOE Orders, Manuals, and Standards

D. Appropriate Codes and Standards

E. Facility Safety Documents

F. Program Documents and Plans

G. Implementation Procedures

H. Subcontractor Statements of Work.

3.2.3 In addition to requirements source documents, managers should also consider previous performance information in the development of review criteria. Performance information documents include:

A. Previous Assessment Reports (internal management and independent)

B. External Regulatory Reviews

C. Process or System Inspections

D. Corrective Action Plans and Status Reports

E. Occurrence Reports

F. Lessons Learned

G. Event Critiques and Fact Findings

H. Trend Reports

I. Causal Analysis Reports

J. Performance Reviews

K. Project Goals and Performance Indicators

L. Safety Concerns

M. Human Performance Analyses

N. Office of Health, Safety and Security/Office of Enforcement noncompliance tracking system (NTS) Reports.

3.2.3.1 Information contained in these documents should be selected based upon impact on the organization and the relationship to the scope of the assessment.

3.3 Performing, Reporting, and Evaluating Management Assessments

NOTE: *The Nevada National Security Site (NNSS) Waste Certification Official (WCO) at AMWTP is notified of Management Assessments pertaining to NNSS activities.*

3.3.1 Managers retain overall responsibility for timely performance of management assessments and evaluation of conclusions.

3.3.1.1 Managers may delegate specific activities in support of management assessments.

3.3.1.2 Responsible managers shall directly participate in the evaluation of management assessments and conclusions.

3.3.2 Responsible managers shall ensure that personnel performing management assessments have completed course 0AWT1133, Management Assessment Training, and are knowledgeable of the program, system, or process being assessed.

3.3.3 All management assessment results shall be documented in TrackWise and contain sufficient detail that demonstrates achievement of the assessment scope and objective. Management assessment results shall include:

A. *Summary*: Describe results of the topic or area assessed, and provide sufficient details to support conclusion that were reached. Attach any supporting documents.

B. *Conditions Adverse to Quality*: Report any CAQs identified and their corresponding corrective action reports (CARs) or nonconformance reports (NCRs).

C. *Strengths*: Identify practices which should be shared with others.

D. *Observations*: Provide details on opportunities for process improvement.

E. *Recommended Actions*: Identify any noted opportunities for performance improvement or for potential Lessons Learned communication for review by the responsible management.

3.3.4 Responsible managers shall ensure the scope and results sections contain sufficient detail to reach objective conclusions and enable an independent reviewer to evaluate the validity of the assessment.

3.3.5 All CAQs identified from management assessment shall be reported in accordance with MP-Q&SI-5.3, Corrective Action, or MP-Q&SI-5.4, Identification of Nonconforming Conditions.

3.3.6 All issues, problems, performance data, and recommendations from management assessments shall be evaluated by the responsible manager to determine the appropriate level of response or action. Evaluations shall be documented on the Management Assessment Report in TrackWise.

3.3.6.1 Assign Action Items for observations or recommendations that are determined by the responsible manager to require follow up and identify the Action Items by number in the Recommended Actions section.

3.3.6.2 If minor issues were identified and corrected during the course of the management assessment, a summary of the issue and correction should be documented in the Recommendations/Observations section of the assessment.

3.3.6.3 Manager review comments will address any observations or recommendations that do not require further action or implementation.

3.3.7 Managers shall report all completed management assessments using TrackWise. Attachments may be used as supporting documentation.

3.3.8 Responsible managers shall review completed Management Assessment Reports (MARs) no later than 10 calendar days from receipt notification, irrespective of required corrective action, nonconformance disposition, or needed improvement.

3.3.9 The management evaluation of completed management assessments shall be documented in the manager review comment area in TrackWise. Manager review comments must be sufficiently detailed to validate the report performance, results, conclusions and any actions taken.

3.3.10 The manager responsible for evaluation of the MAR shall ensure that any CAQ have been correctly and accurately identified and reported in accordance with MP-Q&SI-5.3 or MP-Q&SI-5.4.

3.3.11 Managers shall respond to identified performance issues and act promptly to evaluate actions and correct the identified performance deficiencies.

3.3.12 The QA Manager shall screen all CARs and NCRs issued as a result of management assessments.

3.3.13 The QA Manager is responsible for periodic evaluation of implementation of the Management Assessment Program.

3.3.14 The QA Manager is responsible for evaluation of QA Program Management Assessments to effect corrective actions as necessary.

(DOE/CBFO-94-1012, Section 3.1.E)

4.0 DEFINITIONS

Action Items. Tasks assigned by management to specified individuals using TrackWise. Tasks may be assigned in conjunction with resolving or closing management assessments. Assigning "AIs" shall not substitute for documenting and evaluation of CAQ, but may be used to implement improvement actions.

Condition Adverse to Quality. An all-inclusive term used in reference to any of the following: failures, malfunctions, deficiencies, defective items, and nonconformances. A significant condition adverse to quality is one that, if uncorrected, could have a serious effect on safety or operability.

Management Assessment. An evaluation performed by management that focuses on managements' systems and processes important to mission success, or that represent the greatest risk to the organization, or that have high potential benefit from improvement.

Observation. A condition identified as an opportunity for process improvement, but is not a deficiency or deviation from requirements.

TrackWise. Commercial off-the-shelf software used to schedule, document, report, and track management assessments, and issues or actions resulting from management assessments, such as AIs, NCRs and CARs.

5.0 REFERENCES

(1) 10 CFR Part 830, Nuclear Safety Management, Subpart A–Quality Assurance Requirements

(2) 10 CFR 830.122, Quality Assurance Criteria

(3) DOE-CBFO-94-1012, Quality Assurance Program Document

(4) DOE O 414.1C, Quality Assurance

(5) DOE O 226.1A, Implementation of Department of Energy Oversight Policy

(6) QAP-103, Analytical Chemistry Laboratory Quality Assurance Plan for Environmental Testing

(7) QAPP-01, Quality Assurance Program Plan

(8) MP-DOCS-18.2, Records Management

(9) MP-Q&SI-5.3, Corrective Action

(10) MP-Q&SI-5.4, Identification of Nonconforming Conditions

6.0 RECORDS

Records generated by this procedure are classified in accordance with the table below, and dispositioned in accordance with MP-DOCS-18.2, Records Management.

Record Description	Classification
MP-M&IA-17.1, Case File	Nonpermanent WIPP Records/ENV1-J-1/Destroy 75 years after submittal.
TrackWise Management Assessment Reports	Nonpermanent WIPP Records/ENV1-J-1/Destroy 75 years after submittal.

7.0 EXHIBITS

None

8.0 APPENDICES

Appendix A – Guidelines for the In Development of Department Management Assessment Plans

Appendix B – Guidelines for Selection of Assessment Methodology

Appendix C – AMWTP Department Organizations

Appendix D – AMWTP MAR-2 Flowchart

Appendix A -
Development of
Management Assessment Plans

Management assessment planning must identify the level of management assessment to be performed. The levels of management assessment are described as Program Assessments, Systems Assessments, or Work Process/activity assessment. Each level of assessment provides management with information that can be used to understand performance at each level and identify areas of improvement interest.

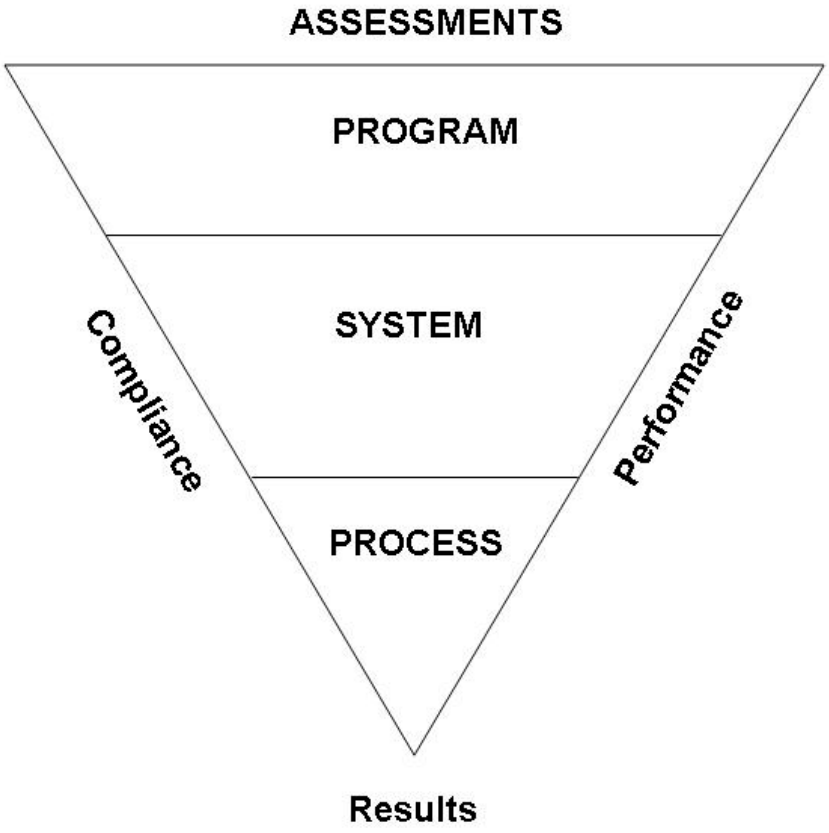

Process Assessment

A. A process is a collection of steps or actions that result in an intermediate outcome.

1. Process Assessments involve examination of work controls (such as, approved procedures and work instructions) and verification that they are being implemented effectively.

2. This level of assessment is important to ensure that workers, the public, and environment are protected from harm.

3. Process Assessments also evaluate the effectiveness of processes from a quality and customer satisfaction perspective.

System Assessment

B. A System Assessment can be used to evaluate whether appropriate leadership and support systems are provided and are effective in enabling the implementation of work processes.

1. This level of assessment evaluates if human and material resources are being properly and effectively used to achieve mission objectives.

2. At the system level, assessment would be performed to determine whether all the necessary elements and interfaces are addressed to ensure the system is capable of consistently meeting requirements and customer expectations. A management assessment of the work control system might determine the cost and resource allocation issues that impact the system.

Program Assessment

C. A Program Assessment is the most complex level of assessment. Review can involve evaluation of interdependent systems (e.g., Training & Qualification, Procedures, and Work Control) interfaces to provide the desired outcome.

1. A Program Assessment is used to determine whether overall organizational programs are properly established integrated and implemented.

2. This level of assessment is appropriate for evaluating complex organizations from several perspectives. Consequently this usually involves evaluating the integration of the many systems designed to achieve organizational goals and customer expectations with emphasis on Environmental, Safety, Health, and Quality Assurance factors.

3. A Program Assessment can be achieved through collective evaluation of system and process assessment. For example; At the program level, a maintenance management program, which relies on the work control system, would use results from the process and system level assessment to determine the effectiveness of the entire maintenance program.

Appendix B -
Guidelines for Selection of Assessment Methodology

Selection of the appropriate assessment methodology helps to establish the depth and objective of the assessment activity. Three methods are commonly used for accomplishing assessments.

A. Performance Based Assessments focus first on the adequacy of the process that produced a product or service, and then on the product or service itself. Performance Based Assessments typically provide the most useful information to management, but require a higher degree of understanding and competence on the part of the assessor.

   1. Problems found in product or service must be followed by evaluation of the methods and procedures used to implement applicable requirements to determine the failure that led to the problems.

   2. Greater emphasis must be placed on determining the extent of the condition to understand if it is isolated to one process or if it can have an affect or exist in other processes.

B. Effectiveness Assessments start with verification of requirements implementation in procedures and compliance with procedures in the workplace. Top level requirements and objectives must be considered when assessing to determine program effectiveness.

   1. This is followed with a determination of whether verbatim compliance has achieved effective implementation of the intent of top level requirements or objectives.

   2. This includes a determination whether a single noncompliance or series of noncompliances with procedures could result in failure to satisfy top level requirements or objectives.

C. Compliance Assessments focus on verifying compliance with requirements through procedure implementation.

   1. Assessment for compliance alone may not adequately identify higher level systemic or programmatic problems, or determine effectiveness.

Appendix C -
AMWTP Department Organizations

	Responsible Departments	TrackWise Functional Areas
President and Project Manager	Business Services	Training
		Contracts
		Procurement
		Plant Automation
		IT
	Plant Manager	Retrieval
		Treatment
		Characterization
		Waste Handling
		Packaging/Shipping
		Container Storage
		Engineering
		Maintenance
		Treatment Tents
		Nuclear Facility Management
		Nuclear Safety
	Quality Assurance	Quality Assurance
		Document Control and Records Management
	Environmental, Security, Safety & Health	OM/IH
		IS/IH
		Environmental Compliance
		Rad Controls
		Security
		Emergency Management
		Facility Rad Con
		Waste Services
		Rad Engineering

and Proj	Responsible Departments	TrackWise Functional Areas
	Waste Programs	Production Planning
		TRU Waste Certification
		TRU Programs
		MLLW/LLW
		Transportation
		Container Movement
		Reconciliation
		Off-Site Waste
		TRU AK
		MLLW/LLW AK
		MLLW/LLW Waste Certification
		Analytical Chemistry Laboratory

Appendix D -
AMWTP MAR-2 Flowchart

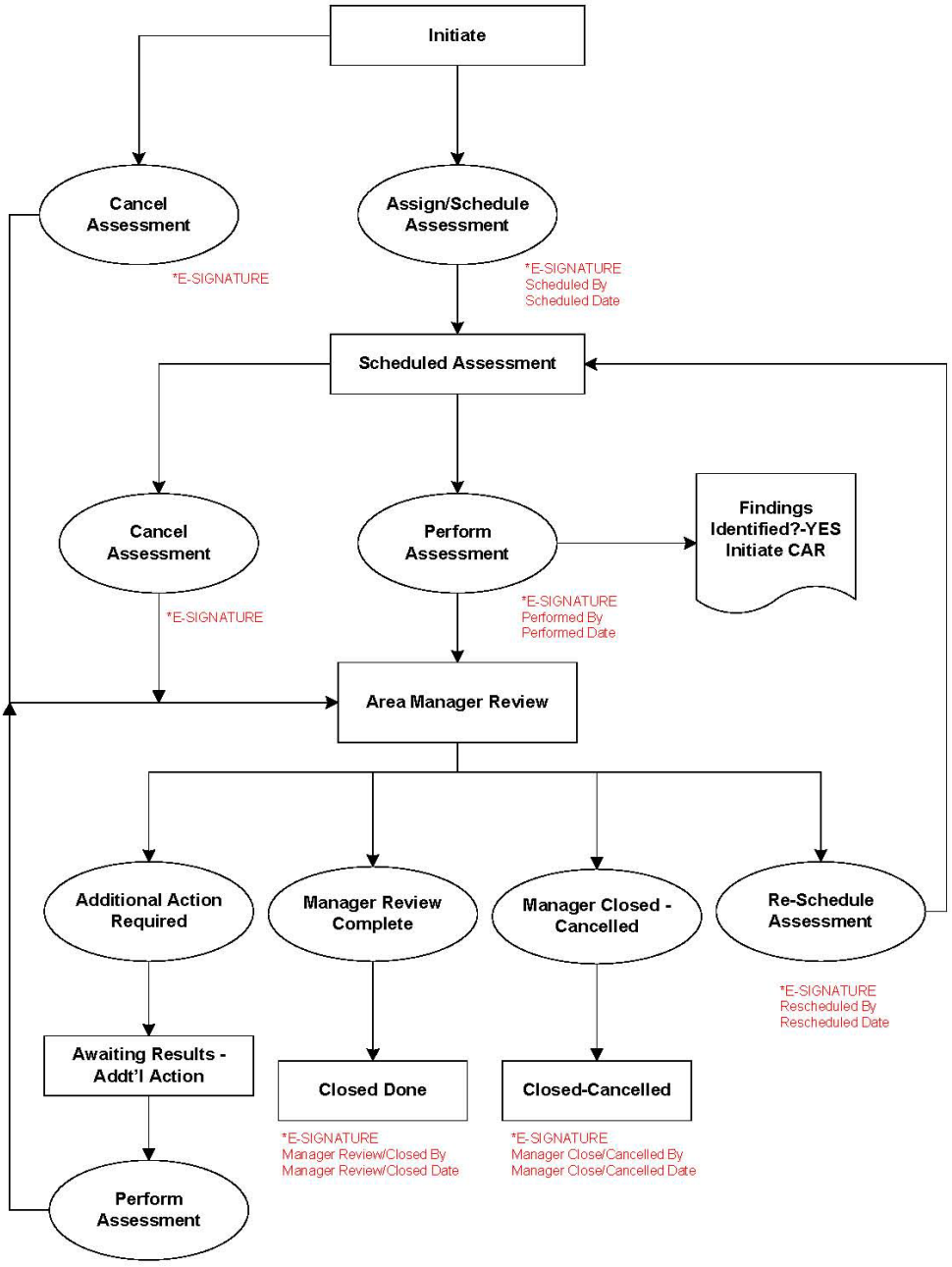

Required Fields to Initiate and Schedule Assessment:

Title
Originator *
Date Opened *
Responsible Manager
Responsible Department
Functional Area
Assessment Level
Risk Level
Assigned Actionee
Date Due
Assessment Scope
Auto Populated Fields

Required Fields to Perform Assessment

Assessment Plan
Assessment Summary
Observations
Strengths
Recommended Actions
CAQ's Identified
CAR or NCR No.
Findings

Required Fields to Perform Area Manager Review

Manager Assessment Review Questions 1 through 3

Manager Review Comments

Independent Assessment

Advanced Mixed Waste Treatment Project

Approval:

(Signature on file. See DCR-13000.)

01/30/14
Date

AMWTP MANAGEMENT PROCEDURE		
MP-M&IA-17.2, Rev. 12	Issued: 02/03/14	Effective: 02/04/14
Independent Assessment		

REVISION LOG

Revision Number	Date Approved	Pages Affected	Description of Revision
0	8/15/02	All	DCR-1363. Initial issue, this management procedure supersedes PQP 10.1 Revision 2.
1	12/11/02	Page 9 Section 4.6.2	DCR-1704, Revise Procedure to Revision 1, to incorporate the changes identified in the LMSA LOI QA Requirements- MAR 1566 & AI 1571.
1.1	4/26/03	Page 5, Section 2, Reference 2.5	DCR-1864, Minor change to correct typographical error in reference 2.5 and minor format corrections. Document review signature from the ES &H Department Manager
2	01/11/05	Page 5, Section 3.10 Page 7, Section 4.2 Page 14, Section 4.10	DCR 3395 – Revised to ensure consistency with and use of TrackWise and to allow evaluation of QA Surveillances as part of overall QA Independent Assessment process. Removed unnecessary requirements. Editorial/format changes to comply with MP-DOCS-18.3. Deleted Form-1267, findings are documented and tracked in TrackWise. Incorporated CBFO comments.
3	12/22/05	All	DCR-4456. This revision is a complete rewrite. Global changes were made due to contractor transition. A due date was established for reporting independent assessments. Roles and Responsibilities were added as Section 2.0, and other Sections were reordered according to MP-DOCS-18.3, Rev. 2.
4	03/30/2006	Page 8, Section 3.8.3	DCR-4922. Changed “The signed and approved assessment report shall be transmitted to assessed organization’s management no later than three weeks after the exit meeting date,” to “The signed and approved assessment report shall be transmitted to assessed organization's management in a timely manner after the exit meeting.”

AMWTP MANAGEMENT PROCEDURE		
MP-M&IA-17.2, Rev. 12	Issued: 02/03/14	Effective: 02/04/14
Independent Assessment		

Revision Number	Date Approved	Pages Affected	Description of Revision
5	09/12/2006	All	DCR-5202, updated for clarification for notifications of external supplier assessments, use of assessment checklists, daily briefings, include direction for documenting findings reported from external assessments activities, and resolve inconsistency with MP-Q&SI-5.3 regarding extensions for corrective action completion dates.
6	10/24/06	New Step 3.8.4	DCR-5426. New step added to update and improve procedure as a result of NTS audit.
7	07/03/07	ALL	DCR-6050. Minor change to advance date for periodic Review. Periodic review completed with no changes to document required.
8	11/30/09	Various	DCR-8468. Entire document revised. AI-46815 updated references and clarified instructions for the number of independent assessments that the AMWTP QA Manager will schedule annually (calendar year). Deleted Exhibit 7.3. Incorporated ANSI/ASME NQA-1-2008. Made editorial changes per MP-DOCS-18.3.
9	11/01/10	Various	DCR-9600. Changes made to implement corrective action for CAR 55228, Action Item 55525, to define the independent assessment requirements of DOE O 450.1A for assessment of the Environmental Management System to meet the internal audit requirement of ISO 14001:2004 (E).
10	09/12/12	All	DCR-10704. Incorporated DOCS-BLUESHEET-08 and ITG BLUESHEET-244.
11	05/22/13	Various	DCR-12287. Updated document in preparation for ISMS.
12	01/30/14	Various	DCR-13000. Added new sections pertaining to corporate/external assessments and documentation of assessor qualifications. Resolved CAR-79008.

TABLE OF CONTENTS

1.0 PURPOSE/SCOPE 1

2.0 ROLES AND RESPONSIBILITIES 1

3.0 PROCEDURE 2

3.1 Scheduling Independent Assessments and Communicating the Schedule 2

3.2 Planning Independent Assessments 4

3.3 Notifying Assessed Organization's Management 6

3.4 Performing Independent Assessments 7

3.5 Identifying Conditions Adverse to Quality and Areas for Improvement 7

3.6 Analyzing Independent Assessment Data and Communicating Assessment Results 8

3.7 Reporting Independent Assessments 9

3.8 Reviewing, Approving, Issuing, and Closing Independent Assessment Reports 9

3.9 Taking Action to Resolve Issues, Problems, and Conditions Adverse to Quality 10

3.10 Reviewing Responses to Findings and Conducting Followup 11

4.0 DEFINITIONS 11

5.0 REFERENCES 13

6.0 RECORDS 14

7.0 EXHIBITS 15

8.0 APPENDICES 18

AMWTP MANAGEMENT PROCEDURE		
MP-M&IA-17.2, Rev. 12	Issued: 02/03/14	Effective: 02/04/14
Independent Assessment		

1.0 PURPOSE/SCOPE

This procedure describes the Advanced Mixed Waste Treatment Project's (AMWTP's) process and requirements for scheduling, planning, conducting, reporting, and acting on *independent assessments* (see def.). This procedure applies to independent assessment of organizations internal or external to the AMWTP. This procedure addresses requirements for independent assessment specified in Title 10 CFR Part 830, Subpart A, Quality Assurance Requirements; DOE O 414.1D, Quality Assurance; DOE O 226.1B, Implementation of Department of Energy Oversight Policy; DOE-CBFO-94-1012, Quality Assurance Program Document; ANSI/ASME NQA-1-2008, Quality Assurance Requirements for Nuclear Facility Applications; and QAPP-01, Quality Assurance Program Plan.

The AMWTP Independent Assessment process is an element of the AMWTP Contractor Assurance System. All program and performance deficiencies, regardless of their source shall be documented in *TrackWise* (see def.) to ensure that adverse *conditions* (see def.) are reported, assigned to, and evaluated by the responsible management and to document the development, implementation, and track completion of *corrective actions* (see def.).

2.0 ROLES AND RESPONSIBILITIES

Performer	Responsibilities
AMWTP Managers and Personnel	• Periodically access the AMWTP Quality Assurance web page and view the independent assessment schedule • Participate in AMWTP internal assessments.
Auditor (Assessor; see def.)	• Qualified to participate on assessment teams • Conducts interviews, observes operations, reviews data and documents, evaluates objective evidence to determine conformance to established requirements and adequacy of work performance.
Lead Auditor *(Lead Assessor*; see def.)	• Qualified to lead assessment teams • Organizes, plans, conducts, and reports assessments; directs auditors • Requests assessed organization's management to correct conditions adverse to quality.

Performer	Responsibilities
Management of Assessed Organization	• Corrects conditions adverse to quality identified during assessment • Provides assessment team with access to facilities, documents, and personnel needed for planning and performing assessments.
Quality Assurance (QA) - Manager/Designee	• Owns, maintains, and ensures implementation of this procedure • Schedules independent assessments • Schedules an independent assessment of the Environmental Management System as determined with the Environmental Compliance manager • Schedules and conducts an annual assessment of the Nevada National Security Site (NNSS) Waste Certification Program • Selects, trains, qualifies, and assigns AMWTP auditors and lead auditors; reviews and approves assessment reports • Establishes required authority for the assessment team.
*Technical Specialist*s (see def.)	• Qualified by indoctrination and technical expertise to participate on assessment teams.

3.0 PROCEDURE

NOTE: *The term "assessment" used in this procedure is synonymous with "audit."*

3.1 Scheduling Independent Assessments and Communicating the Schedule

3.1.1 The QA manager/designee shall schedule independent assessments to measure item and service quality, to measure adequacy of work performance, to determine process and system effectiveness, to verify implementation and effectiveness of AMWTP's QA Program, to evaluate compliance with established policies, procedures, instructions, and contractual requirements, and to promote improvement.

3.1.2 The QA manager/designee shall schedule assessments of items, processes, systems, and services at a frequency commensurate with their hazards, status, and importance. Those that contribute the greatest risk to quality, safety, and mission success are assessed with the greatest frequency, depth, and rigor. A review of past assessments is conducted for consideration in assessment planning. Assessments that confirm acceptable performance may result in reduced frequency and depth of subjects' future assessments. Areas of poor performance should receive increased attention.

3.1.3 Early in each calendar year, the QA manager/designee shall prepare an annual (or longer) independent assessment schedule. The schedule shall identify target assessment areas or organizations and the month of proposed assessment.

3.1.3.1 The QA manager/designee will include an independent assessment of the Environmental Management System as determined by the Environmental Compliance manager.

3.1.3.2 The QA manager/designee will include the annual NNSS Waste Certification Program independent assessment on the annual assessment schedule. Surveillances may be accumulated and used in lieu of a formal annual assessment, provided they were conducted within 12 months of the last annual assessment and encompass the entire waste certification program and supporting elements.

3.1.4 The QA manager/designee shall issue and communicate the independent assessment schedule using the AMWTP Quality Assurance Web Page.

3.1.5 The QA manager/designee shall periodically review and update the independent assessment schedule as necessary to ensure its continual relevance.

3.1.6 AWMTP managers and other affected personnel are responsible for periodically accessing the independent assessment schedule and noting changes.

3.1.7 The QA manager/designee shall schedule assessments of *suppliers* (see def.) when source evaluations are required by MP-PCMT-15.1, Acquisition of Material and Services, Appendix E, Supplier Qualification, with a scheduled performance date promptly following contract award.

3.1.8 Unscheduled independent assessments may be conducted at any time.

3.1.9 Contracted corporate/external independent assessments are conducted in accordance with the procurement statement of work, which includes qualification requirements for the specific assessment being performed.

3.2 Planning Independent Assessments

3.2.1 The QA manager/designee shall assign a lead auditor for each scheduled assessment. Such assignment establishes the authority of the lead auditor and assessment team to conduct scheduled assessments. The lead auditor shall plan, prepare, direct, and report independent assessments.

3.2.2 Lead auditors shall be qualified according to MP-Q&SI-5.8, Qualifying Supply Chain Inspectors, Auditors, Lead Auditors, and Technical Specialists.

3.2.2.1 The manager sponsoring a *corporate/external assessment* (see def.) ensures the team members have adequate training, experience, and qualifications. These qualifications will be documented and included in the completed independent assessment report.

3.2.3 As needed, the lead auditor selects auditors to form an assessment team. Auditors shall be qualified according to MP-Q&SI-5.8. Auditors selected shall have the experience, training, and technical knowledge commensurate with the scope, complexity, and nature of activities to be assessed. Auditors and lead auditors selected shall have sufficient authority and freedom from line management, and they shall be independent of the program, project, work, and organization being assessed.

3.2.4 The lead auditor may select technical specialists from technical disciplines to assist *audit* (see def.) performance. The lead auditor shall indoctrinate technical specialists in their assessment responsibilities according to MP-Q&SI-5.8. Indoctrination of technical specialists shall be documented in the assessment plan.

3.2.5 The lead auditor shall determine the scope of a scheduled assessment. Audit scope may incorporate an organization's entire quality management system, or parts of the quality system, or specific processes, procedures, items, programs, projects, or products.

3.2.6 Recent audit reports of the assessed organization shall be included in scope, especially actions planned by management to correct conditions adverse to quality. Corrective actions taken shall be evaluated to determine their effectiveness.

3.2.7 When assessing supplier laboratories, sample receipt, analysis, data reduction and reporting shall be included in scope. Measurement disciplines (inorganic, organic, etc.) provided shall be identified in scope. Sampling activities, if conducted, are part of laboratory assessments.

3.2.7.1 When assessing the Analytical Chemistry Laboratory, determine the scope of the assessment based on the quality management system defined in QAP-103, Analytical Chemistry Laboratory Quality Assurance Plan.

3.2.8 For each scheduled assessment, the lead auditor shall prepare an assessment plan. (An example assessment plan is illustrated in Exhibit 7.1.) The assessment plan shall identify the following:

- The organization to be assessed
- Scope and purpose of the assessment
- Instructions received, if any, that define an assessment’s particular emphasis
- Assessment team members including any technical specialists
- Tentative or scheduled entrance and exit meeting dates, and assessment location
- Standards, requirements, contracts, governing, or applicable documents.

3.2.9 The assessment plan shall be approved by the lead auditor and distributed to the organization to be assessed. Notifications and distribution of assessment plans to suppliers will be formally communicated through the Contracts and Logistics manager.

3.2.10 By direction of the lead auditor, the assessment team may prepare checklists to guide the assessment and to record collected data. Checklists shall be reviewed by the lead auditor. In lieu of checklists, governing documents and data sheets may be used.

3.2.11 Checklists, if used, are prepared from governing documents to remind Auditors of the specific areas, items, systems, processes, procedures, or products to be assessed.

3.2.12 Checklists do not limit assessment activities when concerns are raised that are not addressed by checklist items. Any governing documents evaluated for implementation in the assessment shall be referenced with revision designations in the assessment report. Auditors may use governing documents or data collection sheets to record audit *observations* (see def.) during conduct of assessment activities.

3.2.13 The assessment team shall review the plan, governing documents, checklists if prepared, and familiarize themselves with their assignments prior to each assessment.

3.3 Notifying Assessed Organization's Management

3.3.1 Management of organizations external to AMWTP should be notified of a scheduled assessment at least 15 working days in advance. AMWTP management should be notified by e-mail or memo at least 10 working days prior to an independent assessment.

3.3.2 Written notification by letter to AMWTP suppliers shall be prepared by the lead auditor, but shall be issued under the signature of the Contracts and Logistics manager.

3.3.3 Management notification shall include:

- The identity of the assessed organization
- The assessment plan
- A list of governing documents (such as quality manuals, quality plans, implementing procedures, work instructions, etc.)
- The agreed upon date(s) of the assessment.

3.3.4 The NNSS Waste Certification Official shall be notified of independent assessments related to the NNSS Certification Program.

3.4 Performing Independent Assessments

3.4.1 For organizations internal to the AMWTP, the lead auditor shall determine if the scope and nature of the assessment justifies an entrance meeting.

3.4.2 The lead auditor will identify if a formal entrance meeting will be required. The lead auditor will coordinate the entrance meeting with the responsible management to discuss the assessment scope, schedule, and establish points of contact. An attendance roster will be used to document representatives in attendance at the Entrance meeting.

3.4.3 Immediately following the entrance meeting, the assessment team shall begin the assessment according to the established plan. By conducting interviews, observing operations, and reviewing data and documents, the assessment team shall seek, obtain, and evaluate objective evidence for compliance with established requirements, and determine the effectiveness of implementing processes and systems.

3.4.4 If at any time an auditor has a concern regarding safety or technical correctness of an activity at AMWTP, the auditor is empowered and obligated to stop work.

3.4.5 If areas of the planned scope cannot be evaluated, the assessment report shall so indicate, describing a rationale for the omission. The assessment scope may be expanded beyond the established plan if conditions warrant, and if approved by the lead auditor.

3.4.6 Assessment progress briefs will be held as deemed necessary by the lead auditor. The lead auditor will brief the assessed organization's management upon determination that a *condition adverse to quality* (see def.), has been identified.

3.5 Identifying Conditions Adverse to Quality and Areas for Improvement

3.5.1 Auditors may identify problems: deviations, departures, deficiencies, or noncompliance with policies or procedures, or other conditions adverse to quality. When confirmed, the lead auditor shall identify such conditions as *findings* (see def.).

3.5.2 The lead auditor shall promptly discuss with assessed organization's management those conditions believed to be findings. Discussions shall confirm agreement that a finding exists, or does not exist.

3.5.3 Findings, deficiencies, and conditions adverse to quality satisfactorily corrected during an assessment shall be discussed during an exit meeting. Corrected deficiencies shall be identified in assessment reports as *corrected during assessment (CDA;* see def.). Self-identified adverse conditions for which corrective action is planned, should not be identified as a finding, but should be described in the final assessment report.

3.5.4 The lead auditor shall identify and document findings using either a Corrective Action Report (CAR), or a nonconformance report (NCR), according to MP-Q&SI-5.3, Corrective Action, or MP-Q&SI-5.4, Identification of Nonconforming Conditions, respectively.

3.5.5 Identified findings shall be reported in a manner so that effective corrective action can be planned and implemented by the affected AMWTP organization.

3.5.6 Processes, systems, and activities that need improvement but are compliant, and weaknesses or other concerns that are not findings, shall be described in independent assessment reports as "observations." Observations do not require tracking in TrackWise.

3.6 Analyzing Independent Assessment Data and Communicating Assessment Results

3.6.1 When the assessment is complete, the assessment team shall discuss and analyze its data and reach conclusions. Based on those discussions, the lead auditor shall prepare a brief for presentation to the assessed organization's management. The brief will include a summary of observed findings and observations.

3.6.2 For AMWTP organizations, the lead auditor shall determine if the scope and nature of the assessment justifies an exit meeting.

3.6.3 The lead auditor will identify when a Formal Exit meeting will be required. As a minimum, the lead auditor will provide a summary of the assessment results with the responsible management. An attendance roster will be used to document representatives in attendance in the event a Formal Exit meeting is convened.

3.7 Reporting Independent Assessments

3.7.1 The lead auditor shall prepare a final assessment report using assessment team input.

3.7.2 The final assessment report shall address each topic described in Exhibit 7.2.

3.7.3 The final assessment report should not include any additional findings or observations that were not presented and discussed during an exit meeting.

3.7.4 Supplier assessment reports will be transmitted under an Acquisitions Services cover letter addressed to the organization's senior management and shall address:

- Reference to the independent assessment by name or number, location, and date
- The approved final assessment report
- A response due date of 30 calendar days from the date of the transmittal letter when findings are identified that require a corrective action response.

3.8 Reviewing, Approving, Issuing, and Closing Independent Assessment Reports

3.8.1 The lead auditor shall forward the assessment report to the QA manager/designee for review and approval.

3.8.2 The QA manager/designee shall review and approve or request revision of the draft assessment report. The QA manager/designee shall approve the final report by signature. The lead auditor shall sign the approved report.

3.8.3 The signed and approved assessment report shall be transmitted to assessed organization's management in a timely manner after the exit meeting.

3.8.4 The NNSS waste certification official at AMWTP must be notified of independent assessments pertaining to NNSS activities.

3.8.5 Once the independent report is written and issued, the assessment is considered closed. The AMWTP independent assessment schedule shall be updated accordingly.

3.8.6 Findings resulting from independent assessments are tracked as open items. Findings and corrective actions are reported and tracked in TrackWise for all independent assessments.

NOTE 1: *The Independent Assessment Record includes the following as a minimum:*

- *Approved Independent Assessment Plan*
- *Record of assessment notification (e-mail or formal letter)*
- *Final approved Independent Assessment Report with any attachments relevant to the results*
- *Record of distribution of Final Independent Assessment Report (e-mail or letter).*

NOTE 2: *Checklists used in performance of the independent assessment are not required as a quality record, but may be included at the discretion of the lead auditor.*

3.8.7 The lead auditor shall prepare the final approved Independent Assessment Record for transmittal to records storage.

3.8.8 The manager sponsoring a corporate/external assessment will approve the assessment report, document any assessment findings in TrackWise, and ensure the final report is maintained as an Independent Assessment record.

3.9 Taking Action to Resolve Issues, Problems, and Conditions Adverse to Quality

3.9.1 Management of the assessed organization shall respond to findings, regardless of how they are identified, and act promptly to correct problems and prevent recurrence.

3.9.2 AMWTP managers shall resolve findings through the CAR or NCR process described by MP-Q&SI-5.3 or MP-Q&SI-5.4, respectively.

3.9.3 The lead auditor will update the TrackWise CAR or NCR for findings associated with supplier assessments, and coordinate all responses to supplier corrective actions through the Contracts and Logistics manager.

3.10 Reviewing Responses to Findings and Conducting Followup

3.10.1 The lead auditor or designee shall determine adequacy of responses and accept or reject responses from the assessed organization's management. Acceptance or rejection of supplier organizations' responses, including the basis for rejection shall be communicated by written correspondence through the Contracts and Logistics manager, and documented in TrackWise. Acceptance or rejection to responses from AMWTP internal independent assessments shall be documented on CARs or NCRs using TrackWise.

3.10.2 When a proposed internal corrective action response is rejected, the lead auditor or designee shall review with the responsible manager. The basis for rejection shall be documented in TrackWise. All findings associated with internal assessments must be resolved as required by MP-Q&SI-5.3.

3.10.3 The lead auditor or designee shall determine the adequacy and verification necessary to confirm that corrective action has been implemented as planned. Follow-up shall be accomplished by review of documentation, or reassessment, or by other appropriate means. Reassessment may be conducted during a future assessment.

3.10.4 When corrective action has been accepted, the lead auditor or designee shall close the TrackWise CAR or NCR and transmit appropriate documentation to the assessed organization's management.

4.0 DEFINITIONS

Audit (assessment). A planned and documented activity performed to determine by investigation, examination, or evaluation of objective evidence the adequacy of and compliance with, established procedures, instructions, drawings, and other applicable documents, and the effectiveness of implementation. An independent assessment should not be confused with surveillance or inspection activities performed for the sole purpose of process control or product acceptance.

Auditor (assessor). Qualified to participate on internal and external assessment teams. Conducts interviews, observes operations, reviews data and documents, gathers and evaluates objective evidence to determine conformance to established requirements and adequacy of work performance.

Condition. Any as-found state, whether or not resulting from an event that may have adverse safety, health, quality assurance, operational or environmental implications. A condition is usually programmatic in nature; for example, errors in analysis or calculation; anomalies associated with design or performance; or items indicating a weakness in the management process are all conditions.

Condition adverse to quality. An all-inclusive term used in reference to any of the following: failures, malfunctions, deficiencies, defective items, and nonconformances. A significant condition adverse to quality is one that, if uncorrected, could have a serious effect on safety or operability.

Corporate/external assessment. An independent assessment contracted by AMWTP management and performed by an outside entity. These entities may be accredited by other recognized assessment standards (i.e., ASQ, ISO, DOE VPP) to perform independent assessments.

Corrected during assessment. Those deficient conditions identified during the performance of an independent assessment that are not programmatic in nature, are easily corrected, and were corrected prior to completion of the assessment to the satisfaction of the assigned lead assessor (auditor). CDAs are included as part of the final assessment report.

Corrective action. Measures taken to rectify conditions adverse to quality and, where necessary, to preclude repetition.

Finding. Deviations, departures, deficiencies, or noncompliance with AWMTP policies or procedures, or other conditions adverse to quality that require corrective action or nonconformance reporting.

Independent assessment. Independent assessment is synonymous with audit. Independent assessments are conducted to measure item and service quality, to measure the adequacy of work performance, and to promote improvement. Independent assessments evaluate the performance of work processes with regard to requirements, compliance, and expectations for safely performing the work and achieving the goals of the organization. The focus of independent assessments should be the items and services produced and their associated processes. The purpose is to improve product/service performance and process effectiveness.

Observations. A condition identified as an opportunity for process improvement, but is not a deficiency or deviation from requirements. Such conditions may eventually become conditions adverse to quality if not addressed.

Lead auditor (assessor). Qualified to lead internal and external assessment teams. Organizes, conducts, and reports assessments, and directs audit personnel. Requests assessed organization's management to correct conditions adverse to quality.

Recommendation. Observations or suggestions by the assessor, which may identify inconsistencies that are noteworthy or opportunities for improvement addressed for the benefit of the assessed organization.

Supplier/vendor. Any individual or organization who furnishes items or services in accordance with a procurement document. An all inclusive term used in place of any of the following: vendor, seller, contractor, subcontractor, fabricator, consultant, and their sub-tier levels.

Technical specialist. Individual designated to provide technical expertise support in performance of Quality Assurance assessments and audits.

TrackWise. Commercial off-the-shelf software used to schedule, document, report, and track management assessments, and issues or actions resulting from assessments, such as action items, nonconformance and corrective action reports.

5.0 REFERENCES

(1) 10 CFR 830, Nuclear Safety Management, Subpart A–Quality Assurance Requirements, Office of the Federal Register, Washington, D.C.

(2) ANSI/ASME NQA-1-2008, Quality Assurance Requirements for Nuclear Facility Applications

(3) DOE-CBFO-94-1012, Quality Assurance Program Document

(4) DOE G 414.1-1B, Management and Independent Assessments Guide for Use with 10 CFR 830, Subpart A; and DOE O 414.1D; DOE M 450.4-1; and DOE O 226.1B

(5) DOE O 226.1B, Implementation of Department of Energy Oversight Policy

(6) DOE O 414.1D, Quality Assurance

(7) DOE O 450.1A, Environmental Protection Program

(8) MP-DOCS-18.2, Records Management

(9) MP-PCMT-15.1, Acquisition of Material and Services

(10) MP-Q&SI-5.3, Corrective Action

(11) MP-Q&SI-5.4, Identification of Nonconforming Conditions

(12) MP-Q&SI-5.8, Qualifying Supply Chain Inspectors, Auditors, Lead Auditors, and Technical Specialists

(13) QAP-103, Analytical Chemistry Laboratory Quality Assurance Plan

(14) QAPP-01, Quality Assurance Program Plan

6.0 RECORDS

Records generated by this procedure are classified in accordance with the table below and dispositioned in accordance with MP-DOCS-18.2, Records Management.

Record Description	Classification
MP-M&IA-17.2, Case File	Misc. Other Record/A16-1.2/Destroy 5 years after superseded.
Independent Assessment Record including: • Approved Independent Assessment Plan • Record of assessment notification (e-mail or formal letter) • Final approved Independent Assessment Report with any attachments relevant to the results • Record of distribution of Final Independent Assessment Report (e-mail or letter).	Both Facility Operating Record/Nonpermanent WIPP Records/ENV2-a-1-a/ Destroy 5 years after life of facility

7.0 EXHIBITS

Exhibit 7.1 – Independent Assessment Plan (Example Only)

Exhibit 7.2 – Independent Assessment Report (Example Only)

EXHIBIT 7.1

Independent Assessment Plan (EXAMPLE ONLY)

ACME Company, XXX Project
Independent Assessment #QA-02-XXX

1.0 SCOPE AND PURPOSE

Describe the scope of assessment including the methodology to be used and the documents governing the activity. Example: The scope of this assessment will be focus on ACME's quality management system, its implementation, and effectiveness.

2.0 SPECIAL INSTRUCTIONS

Define any emphasis of the assessment scope requested by management personnel or other information pertinent to the assessment. Example: Compliance with and implementation of ACME's quality management system with the ACME Quality Manual will be emphasized.

3.0 INDEPENDENT ASSESSMENT TEAM

Identify the Assessment Team members. Identify the Lead Auditor who is responsible for the planning, direction, conduct, and reporting of the assessment.

4.0 SCHEDULE DATES AND LOCATION

Specify the location, date(s) and time on which the assessment will take place. Identify the expected entrance and exit meeting dates. Example: This assessment will be conducted at ACME's main plant, 1575 North South Street, Idaho Falls, Idaho. The entrance meeting will begin at 8:30 a.m., on Tuesday, November 15, 2005. The exit meeting is tentatively scheduled at 4:30 p.m., Thursday, November 17, 2005.

5.0 STANDARDS, REQUIREMENTS, GOVERNING DOCUMENTS

Identify applicable requirements, standards, documents, activities, processes, systems, or items to be assessed. List selected requirements from the governing procedures, or identify procedures, sections of procedures, manuals, and documents. A checklist may be used to satisfy this requirement.

_____

Approved, Lead Auditor, Date

EXHIBIT 7.2

Independent Assessment Report IA-02-XXX (EXAMPLE ONLY)

ACME Company, XXX Project

I ASSESSMENT REPORT EXECUTIVE SUMMARY

The Executive Summary should address:

- AMWTP assessment number and date
- A description of the assessment scope
- Names of lead auditor, assessment team members including technical specialists and their indoctrination
- Names of persons contacted during assessment
- A brief summary of assessment results and conclusions
- A statement of the effectiveness of the Quality Program elements assessed
- A brief statement of conditions adverse to quality identified
- A statement of *recommendations* (see def.) for improvements, if any
- A list of attachments, if any.

II ASSESSMENT REPORT DETAILS

Identify Findings: identify deviations, departures, deficiencies, or nonconformities and associated NCRs or CARs for AMWTP or external organizations

Identify Observation: identify processes, systems, and activities that need improvement but are compliant, and weaknesses or other opportunities for improvement

Identify Corrected Items: Those conditions identified as adverse to quality, but were corrected during the performance of the assessment

Identify Noteworthy Practices: describe practices which should be shared with others

Recommendations: suggest for consideration, possible process or system improvements.

III ASSESSMENT REPORT CONCLUSIONS

Conclusions describe the effectiveness of the assessed activities, systems, processes, etc., and should reference any recommendations or findings. For organizations external to AMWTP, if Findings are identified, the conclusion includes a requirement of management to respond to assessment findings within 30 calendar days from the date of the transmittal letter when findings are identified that require a corrective action response. Management's response should address the cause of the condition, the action taken to preclude recurrence, and an estimated completion date. Assessments internal to AMWTP shall address Findings using MP-Q&SI-5.3, Corrective Action, or MP-Q&SI-5.4, Identification of Nonconforming Conditions. Assessment reports to external organizations are distributed with a cover letter signed by the AMWTP QA Manager.

_____

Lead Auditor Signature QA Manager Approval

8.0 APPENDICES

None

Quality Assurance Surveillance

Advanced Mixed Waste Treatment Project

Approved:

(Signature on file. See DCR-10705.) 09/12/12

Angie Morse
Quality Engineer

Date

AMWTP MANAGEMENT PROCEDURE		
MP-M&IA-17.3, Rev. 8	Issued: 09/12/12	Effective: 09/13/12
Quality Assurance Surveillance		

REVISION LOG

Revision Number	Date Approved	Pages Affected	Description of Revision
0	8/15/02	All	DCR-1347. Initial issue, this management procedure supersedes PQP 10.2 Revision 1.
1	2/18/03	Pg.7, step, 4.4.9 & Pg. 8, step, 4.5.3 and 4.5.4 Pg. 4, section 2.0 Pg.7, step, 4.5.1 Pg. 9, section, 5	1) DCR-2004, Revised Procedure to incorporate comments provided by CBFO Adequacy Review (Reference: Letter CBFO:NTP:KWW:VW:03-0248:UFC:5822 received 1/23/03) 2) Add Reference 2.5 3) Add words to Surveillance Reporting incorporating use of TrackWise™. 4) Modify Records Section
2	10/27/03	Pgs. 4, 5, 7, 8 and 9	DCR-2399, Procedure maintenance update: References, revise sections 4.3.1 & 4.5.1 with the use of AMWTP Form-1246, which replaces AMWTP Form-1245, and records section in accordance with MP-DOCS-18.2 "*AMWTP Records Management*."
3	01/18/05	Page 4, Section 3.2, Page 7, Section 4.5.1	DCR 4083 - Revise to ensure consistency with TrackWise™. Editorial/format changes to comply with MP-DOCS-18.3. Incorporated CBFO comments.

AMWTP MANAGEMENT PROCEDURE		
MP-M&IA-17.3, Rev. 8	Issued: 09/12/12	Effective: 09/13/12

Quality Assurance Surveillance

Revision Number	Date Approved	Pages Affected	Description of Revision
4	2/9/06	All	DCR 4457. Revision 4 is a complete rewrite. This revision adds Roles and Responsibility and reorders other sections according to MP-DOCS-18.3. Revision 4 requires communicating AMWTP's surveillance schedule using the QA Web Page on ORION. Revision 4 requires a surveillance report within five calendar days of completion, and aligns the surveillance process with Bechtel Corporate BSII QA Department requirements. This revision retains original DOE, DOE-CBFO, and AMWTP QAPP requirements.
5	10/24/06	Step 3.5.9	DCR-5427. Add step to update and improve procedure from NTS audit observation.
6	01/17/08	All	DCR-6329. Revision 6 is a complete rewrite to change surveillance reporting from a hard-copy system to an electronic system using TrackWise®. (Associated DCR-6330. Cancellation of Form-1246, Surveillance Log.) Incorporate CBFO comment resolutions.
7	04/14/10	Sections: 3.3, 3.4, 3.5, 4.0, 6.0, Exhibits 1 and 2	DCR 8816. Incorporated use of electronic surveillance checklist using TrackWise. Additional guidance added for surveillance planning, performance, and reporting. Made minor changes to the formatting of some steps to clarify actions. (Associated DCR-8818, Cancellation of Form-1247, Surveillance Report.)
8	09/12/12	All	DCR-10705. Incorporated DOCS-BLUESHEET-08. Incorporated source requirements for the Analytical Chemistry Laboratory (QAP-103). Incorporated DOCS-BLUESHEET-09; Updated DOE O 5480.19 to DOE O 422.1 Incorporated ITG-BLUESHEET-243; Updated to reflect contract transition.

TABLE OF CONTENTS

1.0 PURPOSE/SCOPE 1

2.0 ROLES AND RESPONSIBILITIES 1

3.0 PROCEDURE 3

3.1 General Requirements 3

3.2 Scheduling Surveillances 3

3.3 Surveillance Planning 4

3.4 Surveillance Performance 5

3.5 Reporting Surveillance Results 7

3.6 Taking Action to Resolve Conditions Adverse to Quality 8

4.0 DEFINITIONS 9

5.0 REFERENCES 10

6.0 RECORDS 11

7.0 EXHIBITS 11

8.0 APPENDICES 11

AMWTP MANAGEMENT PROCEDURE		
MP-M&IA-17.3, Rev. 8	Issued: 09/12/12	Effective: 09/13/12
Quality Assurance Surveillance		

1.0 PURPOSE/SCOPE

This procedure describes the AMWTP process for scheduling, planning, performing, and reporting Quality Assurance (QA) *surveillances* (see def.). This procedure addresses requirements for surveillance specified in 10 CFR Part 830, Subpart A, Quality Assurance Requirements; ANSI/ASME NQA-1-2008 Edition, Quality Assurance Requirements for Nuclear Facility Applications; DOE-CBFO-94-1012, Quality Assurance Program Document; QAPP-01, Quality Assurance Program Plan: and QAP-103, Analytical Chemistry Laboratory Quality Assurance Plan for Environmental Testing.

QA surveillances include both planned surveillances (identified in the annual surveillance plan) and unplanned surveillances (added throughout the year as needed). Surveillances are used for observation or monitoring of work in progress to verify whether *items* (see def.), activities, systems, or processes conform to specified requirements. QA surveillances are scheduled, planned, and results reported in the AMWTP electronic issues management system *TrackWise* (see def.).

2.0 ROLES AND RESPONSIBILITIES

Performer	Responsibilities
Responsible Manager	• Provides QA surveillance engineers with access to facilities, documents, and personnel necessary for surveillance performance • Evaluates results of QA surveillances in their areas of responsibility • Takes action to correct identified *Conditions Adverse to Quality* (CAQ; see def.) • May recommend QA surveillance topics (activities, equipment, processes, or systems) to the QA Manager.

Performer	Responsibilities
Quality Assurance (QA) Manager	• Owns, maintains, and ensures implementation of this procedure • Identifies planned surveillance activities • Develops the annual surveillance plan • Schedules additional surveillance activities as needed throughout the year • Reviews surveillance reports for adequate content and accurate identification and reporting of CAQs • Evaluates any recommendations for surveillance and updates surveillance schedule accordingly.
QA Engineers	• Organizes, plans, performs, and reports surveillances according to this procedure • Coordinates surveillance performance with the responsible manager • Conducts interviews, observes operations, reviews data and documents, evaluates *objective evidence* (see def.) to determine conformance to established requirements and adequacy of work performance • Determines the effectiveness of the processes and/or activities surveilled to produce the desired outcome or product • Reports surveillance results to the responsible manager or designee • Identifies CAQs and initiates C*orrective Action Reports* (CARs; see def.) or *Nonconformance Reports* (NCRs; see def.) as appropriate.

3.0 PROCEDURE

3.1 General Requirements

NOTE: *The TrackWise reporting process is described in Exhibit 1, AMWTP Surveillance Flow Chart, and Exhibit 2, Surveillance Report Format.*

3.1.1 QA surveillance activities will be scheduled, performed, and reported using TrackWise.

3.1.2 QA Manager: Identify surveillance topics and frequency of performance based on consideration of perceived risk, hazards, importance to mission and project performance, and past compliance issues.

NOTE: *TrackWise provides an automatic electronic notification to the responsible manager of QA surveillances scheduled for their areas.*

3.1.3 QA Engineer: Report all CAQs identified during QA surveillance performance in accordance with MP-Q&SI-5.3, Corrective Action, or MP-Q&SI-5.4, Identification of Nonconforming Conditions.

3.1.4 QA Manager: Select surveillance personnel based on their experience, technical knowledge, and training.

3.2 Scheduling Surveillances

3.2.1 QA Manager or Designee: Annually establish a QA Surveillance Plan to evaluate the following:

- Adequacy and effectiveness of work activities
- Completed work performance and product quality
- Compliance with established policies, procedures, instructions, and contractual requirements
- Effectiveness of implemented corrective actions based on potential risk associated with the initiating noncompliant condition.
- Past compliance issues
- Opportunities to promote improvement.

3.2.1.1 Obtain input from the Analytical Chemistry Laboratory (ACL) QA Officer to ensure that all aspects of the ACL analytical quality system defined in QAP-103, including analytical testing activities, are covered by QA surveillances on an annual basis.

3.2.2 QA Manager: Ensure surveillances are entered and scheduled in TrackWise and that QA engineers are assigned the responsibility of performing scheduled surveillances.

3.2.2.1 The QA Manager may add unplanned QA surveillances in TrackWise at any time.

3.3 Surveillance Planning

3.3.1 The scope of the surveillance will be defined and documented in the TrackWise surveillance report.

3.3.2 QA engineers performing surveillance shall be independent from and will not have direct responsibility for activities under surveillance.

NOTE: *Surveillance planning includes a review of relevant historical information to identify specific attributes for evaluation of the effectiveness of past corrective actions taken to resolve previously reported problems.*

3.3.3 QA Engineer: Review historical information during surveillance planning, including but not limited to:

- Previously completed surveillances
- Corrective action documentation (CARs and NCRs)
- Management Assessment Report (MAR)
- Independent assessments
- External audits/surveillances
- Trending reports.

3.3.4 QA Engineer: Prepare a Surveillance Checklist in TrackWise to identify line(s) of inquiry, plan, and aid in the surveillance performance. Governing documents of the activity under surveillance will be referenced in the surveillance report. The surveillance planning in TrackWise shall identify the following items as applicable:

- The item, activity, system, or process to be surveilled
- Source documents for surveillance criteria

- Requirements document criteria to which compliance will be evaluated with any regulatory references (e.g., DOE Order 422.1)
- Method(s) to be used to perform the surveillance such as:
  - Observing in-process work activities to ensure conformance to established policies, procedures, instructions, and contractual requirements.
  - Interviewing personnel to determine if they are knowledgeable and qualified to perform their assignment
  - Reviewing records and documents
  - Evaluating finished products or other items.

3.3.5 Program requirements and procedures shall be reviewed for identification of program attributes and included in the surveillance plan as applicable. Review shall include, but is not limited to, the following:

- Conduct of Operations
- Nuclear Safety
- Radiological Safety
- Regulatory Compliance
- Quality program
- Employee Safety/Industrial Hygiene.

3.4 Surveillance Performance

3.4.1 QA Engineer: Coordinate surveillance activities with the affected organization responsible management and within operational authorizations.

3.4.2 QA Engineer: Remain cognizant of and comply with access requirements, hazards, and established controls for the areas and processes under surveillance.

3.4.3 QA Engineer: Minimize interference with ongoing work processes.

3.4.4 QA Engineer: Record sufficient data in the checklist to allow objective conclusions to be reached. The data reported and referenced shall determine whether work-processes, activities, items, or products conform to established requirements.

NOTE: *The intent is to provide a data-supported basis for evaluation of effectiveness of the surveilled item, activity, system, or process in meeting established requirements or providing consistently acceptable results.*

3.4.4.1 Entries in the checklist should include data relevant to the specific line of inquiry, as appropriate:

- Personnel contacted
- Documentation reviewed
- Process observed
- Components or systems inspected
- Sample size and source
- Results of inquiry evaluation; satisfactory, unsatisfactory, or NA with details as applicable
- Statement for line(s) of inquiry that were not observed.

3.4.5 QA Engineer: Promptly notify the responsible manager of any identified CAQs to ensure the condition is understood.

3.4.5.1 Discuss the surveillance results with personnel performing the activity and the responsible manager or designee at the conclusion of surveillance activities.

3.4.5.2 Report all CAQs in accordance with MP-Q&SI-5.3 or MP-Q&SI-5.4 as applicable.

3.5 Reporting Surveillance Results

3.5.1 QA Engineer: Report surveillance results factually and accurately and include the following information, as applicable, to support the evaluation of effectiveness of the process, item, activity, or system surveilled:

- Summary of the completed surveillance, including but not limited to:
  - Purpose/Scope statement
  - Identification and description of items or activities surveilled
  - Issues, concerns, *strengths* (see def.), or *noteworthy practices* (see def.) identified (in general terms if further detail is provided elsewhere in the report such as the checklist comments)
  - Provide a conclusion of the effectiveness of the surveilled process, item, activity, system, or implemented corrective action plan, stating the basis for the conclusion and any recommendations
- Sample size with the number or percent of acceptable/unacceptable items
- Scanned or digital photographs
- Personnel interviewed or contacted, as appropriate
- Conditions identified as Adverse to Quality and their associated CAR and/or NCR numbers. Detailed descriptions of each CAQ are entered in the "Findings" block in TrackWise with reference to the associated CAR or NCR number.
- Items that were corrected during surveillance, with actions taken to correct the item noted
- *Observations* (see def.) on items, processes, systems, and activities that meet specified requirements, but are at risk of becoming adverse to quality. Include specific details regarding items identified as being at risk. Detailed descriptions of observations are entered in the "Observations" block in TrackWise.

- Strengths, including noteworthy practices
- Recommendations noted for performance improvement opportunities or for potential Lessons Learned communication for review by the responsible management
- Supporting documentation (e.g., Excel spreadsheets, copies of pertinent documentation, etc.).

3.5.2 QA Engineer: Report surveillance results in TrackWise and generate CARs or NCRs for any CAQ identified.

3.5.2.1 If the area of the surveillance deals with ACL quality systems, obtain and document ACL QA Officer concurrence with the surveillance report.

3.5.3 The TrackWise Surveillance Report is electronically signed and dated by the performer when completed and forwarded to the QA Manager for review, approval, and final closure.

3.5.4 If the QA Manager does not concur with the surveillance report, the report is returned to the originator for additional action.

3.5.5 QA Manager approval indicates review and concurrence with the surveillance scope, depth, detail, identified CAQs, and effectiveness statement.

3.5.6 Surveillance results are communicated to responsible managers through TrackWise notification of surveillance closure and initiation of any CARs or NCRs issued to report and document CAQs.

3.5.6.1 If the area of the surveillance deals with the ACL, include the ACL QA Officer in the TrackWise notification.

3.5.7 If a surveillance pertains to Nevada National Security Site (NNSS) activities, the NNSS Waste Certification Official at AMWTP shall be notified of completed surveillance activities.

3.6 Taking Action to Resolve Conditions Adverse to Quality

3.6.1 Management of the surveilled organization: Take timely action to correct CAQs in accordance with MP-Q&SI-5.3 or MP-Q&SI-5.4, as applicable.

4.0 DEFINITIONS

Conditions Adverse to Quality. An all-inclusive term used in reference to any of the following: failures, malfunctions, deficiencies, defective items, and nonconforming conditions. Routine maintenance of equipment conducted to established procedures does not constitute a CAQ.

Corrective Action Report. A document or system used to record and control correction of conditions adverse to quality through the process of evaluation and corrective action implementation.

Item. An all-inclusive term used in place of any of the following: appurtenance, assembly, component, equipment, material, module, part, structure, sub-assembly, subsystem, system, unit, or waste characterization data.

Nonconformance. A deficiency in characteristic, documentation, or procedure that renders the quality of an item or activity unacceptable or indeterminate.

Nonconformance Report. A document used to record, control, and resolve *nonconformances* (see def.).

Noteworthy Practices. Practices that exceed requirements and enhance compliance.

Objective evidence. Qualitative or quantitative information, records, data, and statements or fact pertaining to the characteristics of an item or service or to the existence and implementation of a process element. It is based on observation, measurement, or test, and can be verified.

Observation. Items, processes, systems, and activities that meet specified requirements, but are at risk of becoming adverse to quality. For example: procedural inconsistencies that do not result in a CAQ; marginal compliance - a pattern of challenging completion time limits, operational parameters or marginally meeting management expectations; unprofessional performance or attitude, etc.

Strengths. Observed strengths in compliance or knowledge. For example, consistently correct and formal radio communications, consistently professional work performance/attitude of workers, thorough knowledge of the work at hand or requirements and how the work affects the overall process and AMWTP mission, compliance well within the required parameters or management expectations, etc.

Surveillance. The act of monitoring or observing to verify whether an item, activity, system, or process conforms to specified requirements.

TrackWise. Issues Management Database that provides the capability to create different documents requiring unique information fields, different notifications for approval or action, and creates unique tracking/trending reports. Typical document types are as follows:

- QA Program Nonconformance Reports (NCRs)
- Corrective Action Reports (CARs)
- Management Assessment Reports (MARs)
- Action Items (AIs)
- Characterization NCRs
- Surveillances.

5.0 REFERENCES

(1) 10 CFR 830, Subpart A, Nuclear Safety Management, Quality Assurance Requirements

(2) ANSI/ASME NQA-1-2008 Edition, Quality Assurance Requirements for Nuclear Facility Applications

(3) DOE-CBFO-94-1012, Quality Assurance Program Document

(4) DOE Order 422.1, Conduct of Operations

(5) MP-DOCS-18.2, Records Management

(6) MP-Q&SI-5.3, Corrective Action

(7) MP-Q&SI-5.4, Identification of Nonconforming Conditions

(8) QAP-103, Analytical Chemistry Laboratory Quality Assurance Plan for Environmental Testing

(9) QAPP-01, Quality Assurance Program Plan

6.0 RECORDS

Records generated by this procedure are classified in accordance with the table below, and dispositioned in accordance with MP-DOCS-18.2, Records Management. TrackWise is the repository for official records of surveillance scheduling, performance, and reporting.

Record Description	Classification
MP-M&IA-17.3, Case File	Nonpermanent WIPP/ENV1-J-1/Destroy 10 years after submittal
TrackWise Surveillance Report	Both FOR and NP WIPP/ENV2-a-1-a/ Destroy 5 years after Life of Facility (Maintained in Trackwise)

7.0 EXHIBITS

Exhibit 1 – AMWTP Surveillance Flow Chart

Exhibit 2 – Surveillance Report Format

Exhibit 3 – Surveillance Checklist Format

8.0 APPENDICES

None

Exhibit 1 – AMWTP Surveillance Flow Chart

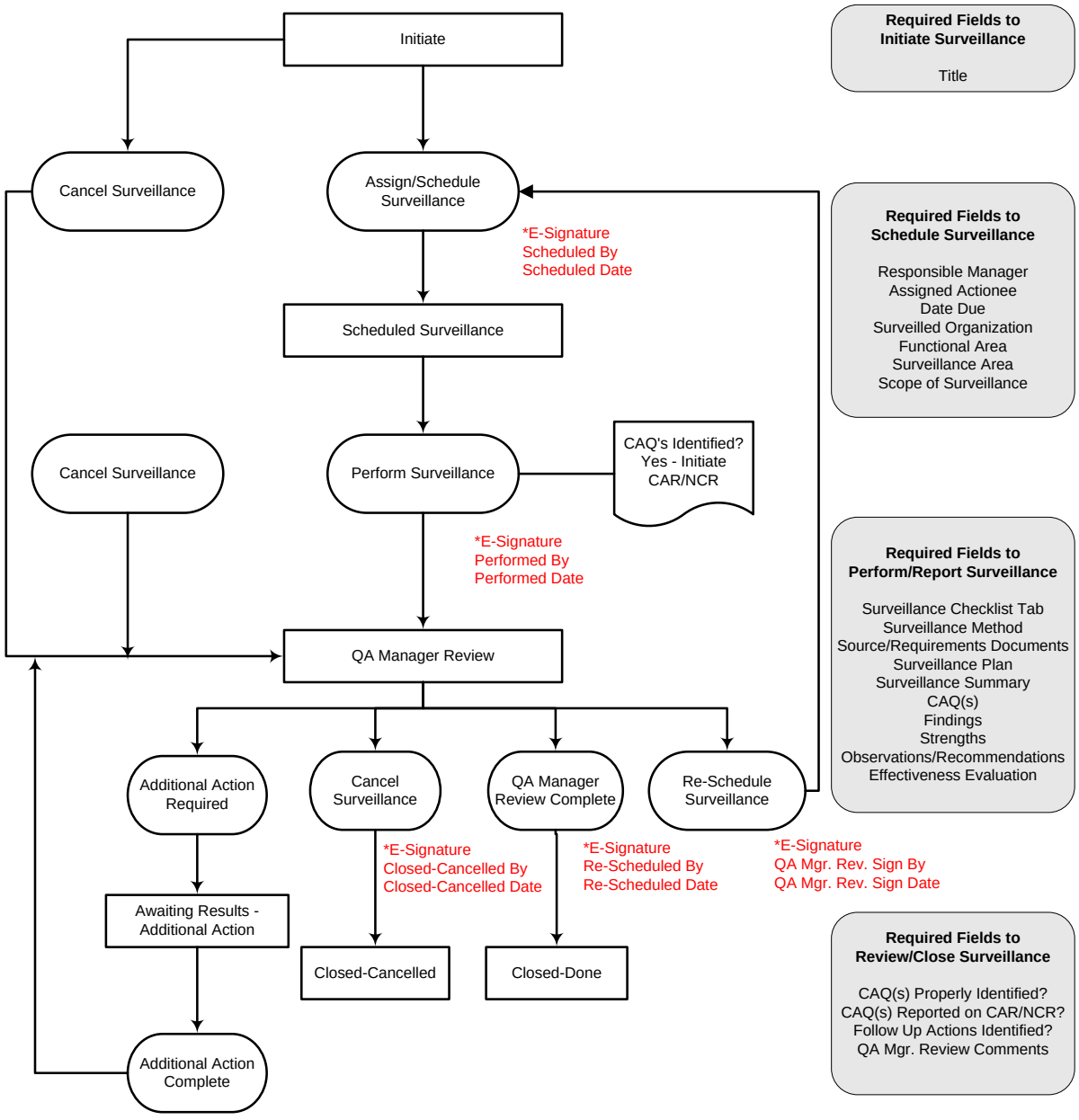

Surveillance Process Flow 03-18-10 Rev. 2

Exhibit 2 – Surveillance Report Format

AMWTP SURVEILLANCE REPORT		Surveillance No.:
Title:		
Originator:	Assigned Actionee:	
Date Opened:	Date Due:	
Risk Level:	Responsible Manager:	
Functional Area:	Surveilled Organization:	
Surveillance Area:		
Scope of Surveillance:		
Scheduled By:	Scheduled Date:	
Rescheduled By:	Rescheduled Date:	
SURVEILLANCE PLAN		
	Surveillance Method:	
Source/Requirements Documents:		
Surveillance Plan:		
SURVEILLANCE RESULTS		
Surveillance Summary:		
CAQ(s) Identified?:	CAR or NCR No.	
Conditions Adverse to Quality:		
Strengths:		
Observations/Recommendations:		
Effectiveness Evaluation:		
Performed By:	Performed Date:	
Additional Action Complete By:	Additional Action Complete Date:	
QA MANAGER - SURVEILLANCE REVIEW		
1. Are all Conditions Adverse to Quality properly identified?		
2. Are all Conditions Adverse to Quality reported on a CAR or NCR?		
3. Are follow up actions identified for any Recommendations?		

AMWTP Advanced Mixed Waste Treatment Project	**AMWTP SURVEILLANCE REPORT**	**Surveillance No.:**

QA Manager Review Comments:

Additional Action Required By:	**Additional Action Required Date:**
QA Manager Review/Closed By:	**QA Manager Review/Closed Date:**
QA Manager Cancelled By:	**QA Manager Cancelled Date:**

Exhibit 3 – Surveillance Checklist Format

AMWTP Advanced Mixed Waste Treatment Project	**AMWTP SURVEILLANCE CHECKLIST**	**Surveillance Checklist No.:**

Title:	
Assigned Actionee:	**Responsible Manager:**
Surveilled Organization:	**Functional Area:**
Surveillance Area:	
Scope of Surveillance:	

SPECIFIC ATTRIBUTES	
Item No. 1. Line of Inquiry:	**Results:**
Item No. 2. Line of Inquiry:	**Results:**
Item No. 3. Line of Inquiry:	**Results:**
Item No. 4. Line of Inquiry:	**Results:**
Item No. 5. Line of Inquiry:	**Results:**
Item No. 6. Line of Inquiry:	**Results:**
Item No. 7. Line of Inquiry:	**Results:**
Item No. 8. Line of Inquiry:	**Results:**
Item No. 9. Line of Inquiry:	**Results:**
Item No. 10. Line of Inquiry:	**Results:**
Item No. 11. Line of Inquiry:	**Results:**
Item No. 12. Line of Inquiry:	**Results:**
Item No. 13. Line of Inquiry:	**Results:**
Item No. 14. Line of Inquiry:	**Results:**

	AMWTP SURVEILLANCE CHECKLIST	**Surveillance Checklist No.:**
Item No. 15. Line of Inquiry:		**Results:**
Performed By:		**Performed Date:**

Acquisition of Material and Services

Advanced Mixed Waste Treatment Project

Approval:

(*Signature on file. See DCR-13266.*) 04/15/14

Date

REVISION LOG

Revision Number	Date Approved	Pages Affected	Description of Revision
0	08/26/02	All	Initial issue. DCR 2002-1312, this management procedure supersedes PQP 7.1, Revision 4 and PQP 7.3, Revision 0.
1	2/20/03	Pgs. 1-5, 8-11,14 Section 4.1.1 Section 5.0 Exhibit 1, Form 1260 Appendix C	Reference DCR-1517 Updated to incorporate QA Line management assessment observations and Form 1373; added steps to improve implementation effectiveness. Added Identification of QA records per adequacy review comment. Update to identify all records generated from this procedure and correct record classifications. Added end use category and corrected Controller signature block. Corrected Scope designators, updated for additional clauses
2	06/26/03	3.12, 4.3.7, 4.3.14, 4.3.17, 4.4, Appendix C	Reference DCR 2128.
3	02/01/06	All	DCR-4769. Periodic Review - Apply “Blue Sheet” changes and apply new template.
4	7/07/06	All	DCR-5034. Rewrite. Procedure updated to resolve CARs and Audit Item 161. Provides requisition processing and recertification. Changed document owner. Made editorial and clarification changes throughout.
5	9/08/06	8, 15, A2	DCR-5285. Made clerical adjustments for clarification. Added reference.
6	07/02/07	All	DCR-5838. Incorporate 10 CFR 851 requirements and incorporate information to supersede MP-PCMT-15.2, MP-PCMT-15.3, and MP-PCMT-15.5.
7	02/04/08	Various	DCR-6676. Updated steps for clarity and to resolve Action Item 361976.Editorial changes per MP-DOCS-18.3, Developing Management Procedures.

Revision Number	Date Approved	Pages Affected	Description of Revision
8	12/11/08	Various	DCR-7427. Added requirements from MP-PCMT-15.7 to comply with required changes from CAR 39456 and 40368. Added corrective actions from CAR 41105. Periodic review. Added new step 3.5.5.1 to close corrective action from CAR 41122.
9	07/14/09	Various	DCR-8312. Added requirements for Subcontract Oversight Team. Clarified onsite work process and requirements. Incorporated issues identified in CAR #44562 and #43139.
10	02/11/10	Various	DCR-8836. Updated document, incorporated NQA-1-2008, Safety Significant Commercial Grade Item/Services Dedication Process, and edited per MP-DOCS-18.3, Developing Management Procedures (including ensuring that all steps were written the same and revising capitalization).
11	11/11/10	Various	DCR-9579. Revised to close CARs 53728, 54546, and 54556 (AI 54941). Created new Form-2011 and renamed Form-1948. Created new Appendix I for commercial grade designation. Separated emergency procurement steps into Section 3.10. Revised for readability and document flow.
12	08/27/12	Various	DCR-10937. Revised based on contract changes.
13	02/28/13	Various	DCR-12061. Inclusion of ODS requirements and specifications. Added procurement requirements for Analytical Laboratory purchases and revised requirements for purchases of Sealed Radioactive Sources.
14	08/29/13	Various	DCR-12405. Updated with correct work control process procedure reference. Updated “Hazardous Work” definition to be in line with definition in MP-COPS-9.18 and DOCS-BLUESHEET-11.
15	02/27/14	Various	DCR-13126. Changed SPD to PD. Replaced all references to Form-2108 to Form-1018.

AMWTP MANAGEMENT PROCEDURE		
MP-PCMT-15.1, Rev. 16	Issued: 04/16/14	Effective: 04/17/14

Acquisition of Material and Services

Revision Number	Date Approved	Pages Affected	Description of Revision
16	04/15/14	Various	DCR-13266. Updated with correct terminology and titles. Added VPP to procedure and made editorial corrections.

TABLE OF CONTENTS

1.0 PURPOSE/SCOPE 1

2.0 ROLES AND RESPONSIBILITIES 2

3.0 PROCEDURE 7

3.1 Initiating the Acquisition 7

3.2 Revision of Purchase Requisitions 13

3.3 Solicitation of Proposals 14

3.4 Evaluation of Proposals 14

3.5 Subcontract/Purchase Order Award 15

3.6 Purchase Order/Subcontract Administration 17

3.7 Revision of Purchase Orders/Subcontracts 19

3.8 Purchase Order/Subcontract Closeout 20

3.9 Special Case Procurements 21

4.0 DEFINITIONS 22

5.0 REFERENCES 25

6.0 RECORDS 28

7.0 EXHIBITS 29

8.0 APPENDICES 29

Appendix A - Onsite Service Acquisition A1

Appendix B - Subcontract Technical Representative Program B1

Appendix C - Vendor Data Processing Requirements C1

Appendix D - Standard QA Procurement Clauses D1

Appendix E - Supplier Qualification E1

Appendix F - Supplier Performance Evaluation Program F1

Appendix G - Subcontract Oversight Team.....G1

Appendix H - Emergency Procurements H1

Appendix I - Commercial Grade Dedication I1

Appendix J - Description of Forms.....J1

Appendix K - Sustainability Requirements in Purchase Orders and Subcontracts K1

AMWTP MANAGEMENT PROCEDURE		
MP-PCMT-15.1, Rev. 16	Issued: 04/16/14	Effective: 04/17/14
Acquisition of Material and Services		

1.0 PURPOSE/SCOPE

This procedure specifies the requirements necessary for acquiring material and services in support of the Advanced Mixed Waste Treatment Project (AMWTP). It specifies requirements, responsibilities, and processes for identification and flow down of quality and technical requirements to suppliers; qualification of suppliers of quality affecting material and services; and performance evaluation of suppliers.

It applies to all AMWTP project personnel who initiate, approve, and undertake procurement actions in support of the AMWTP.

Purchase card acquisitions are restricted to nonsafety-related, nonquality-affecting commercial items or services, and purchase card acquisitions must be in accordance with MP-PCMT-15.22, Purchase Card Program.

The procurement process objectives are listed below:

A. Acquisition of quality products and services at fair and reasonable prices, using best commercial practices

B. Use of recycled content and bio-based content materials and other environmentally preferable products and services to the maximum practicable extent. *Purchase requisitions* (PRs; see def.) are screened by the assigned *procurement specialist* (see def.) for purchase of environmentally preferable materials

(DOE O 450.1A)

C. Use of qualified *vendors* (see def.) who have demonstrated successful past performance and can supply quality products and services consistent with AMWTP's needs

D. Affording small businesses the maximum practicable opportunity to participate in procurements in support of the AMWTP.

All appendices to this procedure contain additional requirements that must be complied with, as applicable.

2.0 ROLES AND RESPONSIBILITIES

Performer	Responsibilities
Engineering Manager or Designee	• Ensures the commercial grade dedication process is implemented for PRs, which include safety-significant *commercial grade items* (CGIs; see def.) or *commercial grade services* (see def.) • Approves PRs that contain technical requirements or include safety-significant CGIs or services.
Requester (see def.)	• Completes 0AWT2230, AMWTP Requester Training • Initiates the acquisition process for material and services as defined herein and ensures all applicable requirements are identified and approvals are obtained • Initiates and/or ensures that all forms identified herein are approved and included with the PR as applicable • Obtains Human Resources approval if acquisition is for the services of an Idaho National Laboratory (INL) contractor retiree (AMWTP, INL, or Idaho Cleanup Project [ICP]) • Determines if material being purchased is an *engineered item* (see def.) or CGI • Identifies all quality requirements using Appendix D, Standard QA Procurement Clauses, to ensure procured items and services meet established requirements and are performed as specified • Ensures that materials/parts (as part of the service) are inspected and received by a supply chain inspector prior to installation • Identifies established quality classification for acquisition of material and services • Ensures Form-1778, Authorization Request for Procurement or Receipt of Sealed Radioactive Source Nuclear Material, is approved and attached to the PR, if any Sealed Radioactive Source (SRS) is being procured

Performer	Responsibilities
Requester (continued)	• Ensures Form-2011, Statement of Work (SOW), is prepared and approved for the acquisition of nonhazardous services, as appropriate • Ensures Form-1948, Onsite Hazardous Services Statement of Work (SOW), is prepared and approved for the acquisition of services for onsite *hazardous work* (see def.) • Ensures appropriate safety and health requirements are included if hazardous work is being performed onsite (Appendix A, Onsite Service Acquisition) • Approves selected supplier, as required • Coordinates the disposition and resolution of nonconformance reports • Obtains *subcontract oversight team* (SOT; see def.) concurrence if work is onsite and hazardous or if work will be performed in a *hazardous area* (see def.).
Responsible Manager (see def.)/Technical Representative	• Ensures subcontractor performs work in accordance with contract requirements • Ensures personnel performing escorting/oversight of subcontractors are trained to perform those duties as defined • Ensures work control documentation for service work is closed out in accordance with applicable procedures.
Subcontract Technical Representative (STR; see def.)	• Performs oversight of onsite construction subcontractor work activities to ensure compliance with safety, health, environmental, security, work control, and performance requirements.

Performer	Responsibilities
Quality Assurance (QA) Manager or Designee	• Reviews and approves PRs, purchase orders, and subcontracts for acquisition of *Class I* (see def.) and *Class II materials and services* (see def.) to ensure the identification and flow down of requirements is sufficient to the extent necessary to comply with QA program requirements • Reviews and approves PRs, purchase orders, and subcontracts for all *Class III materials and/or services* (see def.) in support of the Analytical Chemistry Laboratory (ACL) • Determines the qualification method and conducts QA evaluations of supplier quality programs as specified in Appendix E, Supplier Qualification • Ensures the process for identification and flow down of QA program requirements to suppliers of quality affecting materials and services is established and maintained • Ensures QA oversight of the acquisition process implementation is periodically conducted through assessment and surveillance • Reviews and approves quality affecting work to be performed under *task baseline agreements* (TBAs; see def.) with INL and ICP contractors.

Performer	Responsibilities
Environmental, Safety, and Health (ES&H) Director or Designee	• Provides information and identifies conditions, prerequisites, and stipulations to satisfy safety- and environmental-related regulatory requirements • Signifies the adequacy and/or completeness of the ES&H provisions, including the applicability of Integrated Safety Management System (ISMS) requirements • Reviews and approves PRs for safety-related materials, chemicals, and services • Reviews and approves subcontractors for hazardous *onsite work* (see def.) • Approves subcontractor-provided substance abuse programs for conformance to 10 CFR 707, Workplace Substance Abuse Programs at Department of Energy (DOE) Sites • Assists STRs with subcontractor oversight to assure conformance to applicable safety and health requirements to include 10 CFR 851, Worker Safety and Health Program • Ensures no *ozone depleting substances* (ODSs; see def.) are present within materials, other than exempt quantities for laboratory use • Establishes requirements for subcontractor health and safety plans and training requirements on Form-1948.
Procurement Specialist	• Acts as on-call procurement specialist for an emergency • Verifies adequacy of PR requirements for purchase • Coordinates and controls solicitation, evaluation, award, and closeout processes and all associated actions and deliverables in accordance with the procurement process description.
Plant Manager or Designee	• Sends e-mail notification identifying the materials or services that are needed for an emergency.
SOT	• Performs oversight and approval of onsite hazardous work being performed by subcontractors at the AMWTP.

Performer	Responsibilities
Supply Chain Inspector	• Performs receipt and inspection of materials as required by the subcontract/purchase order and Form-1255, Receiving Inspection Report, in accordance with MP-PCMT-15.21, Material Management.
Training Manager or Designee	• Approves all PRs for training services.
Maintenance and Landlord Manager	• Approves PRs for onsite hazardous work or for work performed in a hazardous area • Identifies (and concurs with) any new potential hazards if there is a change in scope for onsite hazardous work • Participates on the SOT.

3.0 PROCEDURE

3.1 Initiating the Acquisition

NOTE 1: *Requesters should plan a 10 to 15 working-day cycle time for materials and services with an estimated value less than $100,000; and a 20 to 40 working-day cycle time for materials and services with an estimated value greater than $100,000. Cycle time is counted from the date a PR is received by Procurement through purchase order/subcontract award.*

NOTE 2: *Instructions for processing emergency procurements is found in Appendix H, Emergency Procurements.*

NOTE 3: *The following actions DO NOT require a PR:*

A. Agreements for legal services entered into and under the purview of AMWTP General Counsel

B. Acquisition requests processed in accordance with MP-PCMT-15.22

C. Reimbursements made using Form-1968, Check Request

D. Incidental, nonquality acquisitions authorized by a cost account manager with delegated authority not to exceed $1,000.

3.1.1 Requester: To initiate the acquisition, access the Maximo system via the AMWTP home page under "Applications."

NOTE 1: *The requester is responsible for including all required information and documentation and for obtaining required reviews and approvals.*

NOTE 2: *Information needed in Step 3.1.1.1 includes the safety, technical, quality, and performance requirements of the material or services needed.*

3.1.1.1 Enter all information as required.

3.1.1.2 Identify if material is an engineered or commercial item.

3.1.1.3 If the PR is for acquisition of sealed radioactive sources, ensure that a completed Form-1778 is attached prior to routing the PR, in accordance with MP-SCTY-16.10, Nuclear Material Source Control.

3.1.1.4 If item is engineered, ensure a relevant, approved design output document (e.g., engineering drawing, engineering specification) has been prepared in accordance with MP-CD&M-11.3, Design Control, and included with the PR.

NOTE: *Quality classifications for items are documented in Maximo.*

3.1.1.5 If the item has not previously been classified, contact Engineering and QA to ensure the appropriate evaluations are completed in accordance with MP-Q&SI-5.6, Graded Approach.

3.1.1.6 If the request is a new item for inventory, initiate a Form-1448, Notice to Code Spares, in accordance with MP-CMNT-10.19, Computerized Maintenance Management System.

NOTE: *Form-2011 is not required for the following:*

- Staff augmentation *(see def.)(level-of-effort, no deliverables) requires Form-1018, Position Description*
- *Fabrication in accordance with a performance specification or approved drawings*
- *Onsite hazardous work (requires Form-1948).*

3.1.1.7 If requesting staff augmentation services or other nonhazardous services to be performed onsite, complete steps outlined in Appendix A, as appropriate.

3.1.1.8 If services are required to be performed, prepare Form-2011 and attach it to the PR.

3.1.1.9 If hazardous work will be performed onsite, prepare Form-1948, and complete the steps outlined in Appendix A.

NOTE: *Requests for commercially available items or services from small businesses having a value less than $150,000 are exempt from Step 3.1.2.*

3.1.2 Requester: If the requirement is a noncompetitive action estimated to cost $25,000 or more, check the appropriate PR block and attach Form-1262, Noncompetitive Procurement Justification (NCJ) (for NCJ Procurement Exceeding $25,000), unless otherwise not required.

3.1.3 Requester: Perform the following steps for material that is Class I, II, or III:

NOTE 1: *Form-1255 requirements are correct, accurate, and consistent with PR requirements.*

NOTE 2: *Form-1255 is prepared and approved by cognizant personnel to define inspection and documentation requirements for receipt inspection. This form is also used to identify any special care, storage, and handling necessary upon receipt of material.*

3.1.3.1 Identify the minimum quality requirements (including additional QA procurement clauses based on the specific technical requirements for the purchase) on the PR in accordance with Appendix D.

3.1.3.2 Prepare Form-1255 and ensure that quality clauses identified on the requisition are also accurately identified on Form-1255, as applicable, and attach it to the PR.

NOTE: *Only commercial items or services used in safety-significant Class I applications at AMWTP are candidates for commercial grade dedication.*

3.1.3.3 If a material or service is a candidate for *commercial grade dedication* (see def.), see additional requirements in Appendix I, Commercial Grade Dedication.

NOTE 1: *The PRs for Class I and II (and III if for ACL use) material and services are automatically routed to QA for approval to verify that adequate requirements are identified, to ensure technical and quality needs are met, and to ensure the PR includes all relevant documentation and complies with AMWTP QA Program requirements.*

NOTE 2: *The PRs (other than for ACL use) for Class III material and services are monitored by the QA Manager or designee via periodic assessments.*

3.1.3.4 For Class I and II procurements (and Class III if for ACL use), obtain QA review and approval of the associated Form-1255 and identify any attributes requiring QA or Engineering review.

NOTE: Vendor data *(see def.) to be provided with shipment and/or for information only will be identified on Form-1255 and the PR.*

3.1.4 Requester: If vendor *submittals* (see def.) are required for review and/or approval prior to material shipment, complete Form-1802, Vendor Data Submittal Register, and attach it to the PR.

3.1.4.1 When completing Form-1802, include a complete description of the items to be submitted and the due dates.

3.1.4.2 Ensure that specified due dates are compatible with applicable quality clauses and the *statement of work* (SOW; see def.) or specification.

3.1.5 Requester: If the PR is for containers listed in INST-OI-24, Packaging Radioactive Waste, or low-level waste (LLW) export boxes, route the PR to the Nevada National Security Site Waste Certification Official (WCO) for concurrence.

- Waste packaging/characterization services for LLW/mixed low-level waste (MLLW) and related procurements/contracts require review by the LLW/MLLW WCO.

3.1.6 Requester: If the PR is for training services, route the PR to the Training Manager for approval.

3.1.7 Requester: If the PR is for onsite hazardous work or the work will be performed in a hazardous area, route the PR to the ES&H Director and Maintenance and Landlord Manager for approval.

3.1.8 Requester: If the PR is for ergonomic items, or safety-related material (chemicals, hoisting and rigging, and personal protective equipment requires material safety data sheet, etc.), route the PR, and if applicable, Form-1366, New Chemical Request Form, for new chemicals, to ES&H for approval.

3.1.9 ES&H: When a PR is received for approval, identify conditions, prerequisites, and stipulations to satisfy applicable safety- and environmental-related regulatory requirements.

3.1.9.1 Ensure no ODSs are purchased for equipment or facilities, in accordance with Appendix K, Sustainability Requirements in Purchase Orders and Subcontracts, other than exempt quantities for laboratory use.

3.1.10 ES&H: If the PR is for the acquisition of a new chemical, review the applicable material safety data sheet and associated Form-1366, completed by the requester, and provide approval prior to purchase.

(ISMS; 10 CFR 851; MP-ISIH-2.5)

NOTE: *The Plant Automation/Information Technology (PAIT) Manager will ensure that requirements for computer products conform to Electronic Products Environmental Assessment Tool (EPEAT).*

3.1.11 Requester: If the PR involves acquisition of computer or data processing equipment, software, or systems, including licensing of software or systems, route the PR for PAIT Manager or designee approval.

NOTE 1: *Software acquisitions that are quality-affecting or safety significant are subject to the requirements of MP-CD&M-11.2, Software Quality Assurance, for the determination of acceptability and compliance to quality and technical requirements.*

NOTE 2: *If needed, revision to the Baseline Inventory and Software Classification list will be done in accordance with MP-DOCS-18.4, Document Control.*

3.1.11.1 If the software to be purchased is among the U.S. Department of Energy (DOE) Toolbox Codes or DOE Safety Design Codes, ensure that a software change request (SCR) is initiated in accordance with MP-CD&M-11.2 to have this software assigned a class and added to INST-CD&M-11.2.2, Software Inventory Classification.

3.1.11.2 Ensure that Form-1172, Software Quality Plan, has been approved for quality-affecting or safety-significant software acquisitions to identify software QA requirements and is included for incorporation into the purchase order/subcontract.

3.1.11.3 Ensure that the baseline software QA documents required by the approved Form-1172 are identified and included on Form-1802 as vendor data submittals.

3.1.12 Requester: If the PR includes engineering or technical requirements having safety and/or quality significance or safety-significant commercial grade items/services, route the PR for Engineering Manager or designee approval.

NOTE 1: *The PRs for inventory reorder that have previously established and approved technical and quality requirements identified in Maximo do not require the PRs to be reapproved other than by the cost account manager >$5,000.00. Any changes to the technical or quality requirements require re-approvals documented on Form-1448.*

NOTE 2: *Each PR requires at least two approvals. The requester cannot be the same person as the manager approving the PR.*

3.1.13 Requester: If the PR is for repair or maintenance of government property (e.g., replacement of parts), ensure that the item is not shipped without attaching a completed Form-1654, Request for Shipments/Transfer of Property, to the PR.

3.1.13.1 Include quality and technical requirements and criteria for acceptance of repairs/maintenance as applicable.

3.1.13.2 Procurement Specialist: Coordinate receipt of return authorization and shipment of items to the supplier.

3.1.14 Procurement Specialist: Review each PR for purchase of environmentally preferable materials (Appendix K).

3.1.14.1 Ensure no ODSs are purchased for equipment or facilities, in accordance with Appendix K, other than exempt quantities for laboratory use.

3.2 Revision of Purchase Requisitions

NOTE: *The PR changes that have an impact on the following items require the PR to be resubmitted and rerouted:*

- *The technical description (any material or part substitution must be evaluated in accordance with INST-CD&M-11.1.3, Approved Equivalent Parts)*
- *SOW/engineering specification*
- *Class I or Class II material or QA requirements, including safety, technical, quality, or performance requirements*
- *Commercial requirements.*

3.2.1 Requester: If a PR needs to be changed and the changes DO have an impact on any items listed above, return to Section 3.1 to document the changes, additions, or deletions, so the approvers have a clear understanding of the changes.

3.2.1.1 Reroute the revised PR in Maximo for approval.

3.2.2 Requester: If the revised PR needs to be changed and the changes (1) are administrative in nature, (2) occur prior to final routing, and (3) DO NOT change or have an impact on the items listed above, revise the PR with the changes and continue the Maximo routing process.

3.2.2.1 If the PR, Form-1255, or Form-1964, Commercial Grade Item/Service Dedication Plan, is changed after initial routing, ensure that all forms are consistent with the revised requirements and obtain the original level of approvals.

3.3 Solicitation of Proposals

3.3.1 Requester: Obtain SOT approval to release the solicitation package for proposals, if work being performed is onsite hazardous work in accordance with Appendix A.

3.3.2 Procurement Specialist: Prepare the solicitation package and obtain functional reviews to ensure the technical, safety and health, and quality requirements are identified as appropriate.

3.3.2.1 Identify prospective sources of supply.

3.3.2.2 Include well-known and reputable sources that have a reasonable opportunity for award on the bidders' list.

3.3.2.3 Issue and administer the solicitation, ensuring the same information is provided to all prospective offerors to maintain equitable proposal preparation.

3.3.2.4 Provide a point of receipt for all proposals.

3.3.2.5 Identify potential small business concerns that may be capable of meeting procurement needs identified.

3.4 Evaluation of Proposals

NOTE 1: *Proposal evaluations are performed by the Procurement Specialist, requester, and any required functional reviewers (e.g., QA, ES&H, and General Counsel).*

NOTE 2: *Proposal evaluation is required when:*

- *Separate technical proposals are solicited*
- *Technical specifications are issued*
- *An equivalent (equal) to a solicited brand name is offered*
- *Technical exceptions are submitted*
- *Responsiveness cannot be determined without technical review.*

3.4.1 Evaluators: Maintain confidentiality regarding the content and evaluation.

3.4.1.1 Sign a Confidentiality and/or Conflict of Interest Certification when required.

3.4.2 Procurement Specialist: Determine the extent of proposal evaluation with the requester.

3.4.3 Procurement Specialist: Ensure the necessary safety, environmental, technical, quality, work plan, schedule, commercial, performance, and cost evaluations are conducted.

3.4.3.1 Procurement Specialist: If the acquisition is for a facility (lease or purchase), ensure that a fire assessment is performed and any required corrective actions are incorporated into the facility acceptance criteria prior to occupancy.

3.4.3.2 QA Manager or Designee: If the work to be performed is for Class I or II (and Class III if for ACL use) noncommercial grade material or services, and the selected offeror is not currently on the *approved vendor list* (AVL; see def.), evaluate the selected offeror's proposal, including its QA program, to determine acceptability to perform and placement on the AVL prior to award (see Appendix E).

3.4.3.3 QA Manager or Designee: If the PR includes Class I CGIs or services, ensure that the planning portion of the commercial grade dedication process has been completed as required by INST-CD&M-11.1.5, Commercial Grade Item/Service Dedication (see Appendix I).

3.4.4 Procurement Specialist: Identify the successful offeror and obtain written concurrence from the requester for the selection.

3.5 Subcontract/Purchase Order Award

3.5.1 Preparation of Purchase Orders/Subcontracts

3.5.1.1 Procurement Specialist: If the award value will exceed the PR amount by more than $1,000, ensure that the PR is revised or a new PR provided increasing the authorized funding prior to issuing the purchase order/subcontract.

3.5.1.2 Procurement Specialist: Prepare written purchase orders/subcontracts when the value of the transaction exceeds $100,000.

3.5.1.3 Procurement Specialist: If the purchase order award is for nonquality-affecting goods or services and is verbal, perform the following steps:

3.5.1.3.1 Verify mutual understanding of requirements.

3.5.1.3.2 Provide a verbal notice to proceed.

3.5.1.3.3 Enter pertinent information into Maximo and Costpoint (unless payment will be made using a purchase card).

3.5.1.4 Procurement Specialist: If a written purchase order/subcontract is used, complete the following:

3.5.1.4.1 Prepare the purchase order/subcontract consistent with the PR, solicitation documents, and approved changes to requirements.

3.5.1.4.2 Ensure all quality clauses applicable to the purchase are identified, as appropriate, using Form-1373, Standard Procurement Quality Clauses, or listed in the purchase order.

3.5.1.4.3 Obtain all required reviews and approvals of the purchase order/subcontract package.

3.5.1.5 QA Manager or Designee: Review and approve Class I and Class II (and Class III if for ACL use) designated goods or services purchase orders /subcontracts to ensure that they contain or address the following:

- Applicable codes or standards, technical specifications, and quality requirements identified in the PR
- Supplier/subcontractor is qualified for the scope, items, or services required, and any limitations are identified that may require compensatory measures to be taken by AMWTP
- Purchase orders/subcontracts are complete and accurate and contain the appropriate technical and quality requirements necessary to determine and verify the acceptability of items or services required.

NOTE: *If purchase orders/subcontracts are for Class I or Class II engineered items or CGIs for use in Class I safety-significant applications, vendor nonconformance reporting identification/notification requirements is identified in the purchase order/subcontract*.

3.5.1.6 Procurement Specialist: After verifying that required approvals have been obtained, have the individual with delegated financial authority sign the purchase order/subcontract.

3.5.1.7 Upon award, input order data into Maximo and Costpoint.

3.5.1.8 If onsite services are being acquired that require unescorted access to AMWTP facilities, initiate the subcontractor badging process specified in MP-SCTY-16.11, Personnel Security. If the subcontractor is not a U.S. citizen, follow the requirements outlined in MP-SCTY-16.4, Foreign National Access.

3.6 Purchase Order/Subcontract Administration

3.6.1 Procurement Specialist: If work being performed is onsite and hazardous, obtain SOT approval to issue a notice to proceed in accordance with Appendix A.

3.6.1.1 Establish and maintain the official procurement file.

3.6.1.2 Receive and distribute vendor data.

3.6.1.2.1 Process submittals in accordance with Appendix C, Vendor Data Processing Requirements.

3.6.1.3 Receive and coordinate responses to requests for information.

3.6.1.4 Process and authorize changes (refer to Section 3.7.).

3.6.1.5 Oversee expediting support for critical materials and services.

3.6.1.6 Transmit/receive all correspondence between AMWTP and the subcontractor, except as may be provided in the purchase order/subcontract.

3.6.1.7 Notify the supplier to ship material upon receipt of authorization from the requester if QC-33 is invoked (refer to Step 3.6.2.1).

3.6.2 Requester: Review all submittals for completeness and acceptability and request corrections/additional information as needed.

3.6.2.1 Verify receipt and approval of vendor data before authorizing the Procurement Specialist to release shipment of material (reference QC-33).

3.6.3 STR: Ensure technical coordination, control, and oversight of each assigned subcontract, in accordance with Appendix B, Subcontract Technical Representative Program, and all applicable requirements.

3.6.4 Supply Chain Inspector: Perform receiving inspections in accordance with MP-PCMT-15.21 and approved Form-1255.

3.6.4.1 If a nonconformance has the potential to adversely affect or has affected completed or in-progress safety, quality, or technical requirements, identify and report nonconformance and other conditions adverse to quality in accordance with MP-Q&SI-5.4, Identification of Nonconforming Conditions.

3.6.4.2 QA Manager: Evaluate the condition in accordance with MP-Q&SI-5.3, Corrective Action.

3.6.4.2.1 Notify responsible management of any decision to issue a “Stop Work.”

3.6.5 Requester or Subcontract Technical Representative: Do not authorize final payment until services rendered have been accepted.

3.6.6 Procurement Specialist: If work was performed onsite and required issuance of a security badge, ensure that all subcontractor personnel badges have been returned as required by MP-SCTY-16.11.

3.7 Revision of Purchase Orders/Subcontracts

3.7.1 Requester: Prepare a PR identifying the specific changes/revisions required (e.g., additional funding or revisions to the SOW) to be incorporated into the purchase order/subcontract.

NOTE: *If the purchase order/subcontract includes an SOW, the requester indicates specific changes in scope required, including deliverables, if appropriate.*

3.7.1.1 Ensure that changes made to AMWTP drawings and specifications are controlled in accordance with MP-CD&M-11.3; MP-CD&M-11.5, Drawing Control; and/or MP-CD&M-11.7, Documenting Engineering Specifications.

3.7.1.2 Ensure that requirements in MP-CD&M-11.3 are followed if Form-1347, Request for Information, is used to document a change in requirements.

3.7.1.2.1 If a change in scope is being requested for onsite hazardous work, route Form-1347 to the Maintenance and Landlord Manager and ES&H Director or designee for identification of any new potential hazards and concurrence.

3.7.1.2.2 If the requested deviation affects a QA requirement, obtain QA concurrence prior to acceptance.

3.7.1.3 Forward the completed Form-1347 (if used) to the cognizant procurement specialist for incorporation into the purchase order/subcontract.

3.7.1.4 Identify the change impact and determine if any work needs to be suspended or re-performed and consider the quality nonconformance reporting requirements for the completed work scope.

3.7.1.5 Route the Maximo PR and obtain the same level of approval as the original PR, if applicable.

NOTE: *Modifications that increase or decrease the price are subject to review and approval in accordance with the Procurement Specialist's delegation of authority.*

3.7.2 Procurement Specialist: Ensure that modifications to the purchase order/subcontract are prepared, approved, and issued as follows:

3.7.2.1 Ensure that all changed requirements are clearly delineated in the modification (e.g., Form-1347, delivery date, price).

3.7.2.2 Sign the modifications that do not affect the price.

3.8 Purchase Order/Subcontract Closeout

NOTE: *A purchase order/subcontract is completed when the supplier has completed the required deliveries of supplies or performed all services in a satisfactory and acceptable manner.*

3.8.1 Procurement Specialist: Verify all items/services were received and accepted.

NOTE: *Records for non-quality commercial item orders <$10,000 do not require records management in accordance with MP-DOCS-18.2, Records Management.*

3.8.1.1 Retain all records for nonquality commercial item orders <$10,000 in the Maximo/Costpoint systems.

3.8.1.2 Close out the purchase order/subcontract in Maximo/Costpoint.

3.8.1.3 Close all other files as follows:

3.8.1.3.1 Complete a supplier performance evaluation as applicable in accordance with Appendix F, Supplier Performance Evaluation Program.

3.8.1.3.2 Prepare the file using Form-1851, Procurement Closeout Checklist.

3.8.1.3.3 Process the closed file in accordance with MP-DOCS-18.2.

3.9 Special Case Procurements

3.9.1 Procurements from INL or ICP Contractors

NOTE 1: *Work performed and/or materials provided by INL and ICP contractors will be accomplished under agreements in accordance with this procedure. Provisions are incorporated within these agreements orders for the performance of low-dollar-value special requests via a TBA or releases prepared by the procurement specialist and based on requirements provided by the requester.*

NOTE 2: *The process for establishing a TBA/release is as follows*:

3.9.1.1 Requester: Determine the need for work/material when work/material is not readily or economically available from the commercial sector.

3.9.1.2 Obtain ES&H and QA reviews of proposed work/material, as applicable.

3.9.1.3 Determine which contractor should perform work/provide material with assistance from the procurement specialist.

3.9.1.4 Transmit work/material requirements (including any special safety and/or quality provisions) and fund source to the procurement specialist.

3.9.1.5 Procurement Specialist: Obtain cost and performance information from the performing contractor.

3.9.1.5.1 Establish a TBA/release and obtain concurrence from the performing contractor.

3.9.1.5.2 Provide copies of the TBA/release to the performing contractor.

3.9.1.5.3 Monitor performance and completion of requirement.

3.9.1.5.4 Upon verification of final payment, close out action as appropriate.

4.0 DEFINITIONS

Approved vendor list. List of vendors that have been evaluated by the QA organization and approved for supply of quality-affecting items and services. The approved vendor list is maintained by the QA Manager and is available on the AMWTP home page.

Class I materials and services. Equipment identified by RPT-DSA-02, Documented Safety Analysis, as Safety Class or Safety Significant. Class I structures, systems, and components (SSCs) are those items whose failure presents the highest potential safety consequence and project risk. Class I SSCs are identified as Q-Listed SSCs.

Class II materials and services. Equipment controlled or designated by RPT-DSA-02, as "Other Items Important to Safety" by statutory requirements, by Waste Isolation Pilot Plant (WIPP) requirements, or certain safety equipment required by permit, or where a failure could directly cause injury to personnel, through a conventional or radiological means.

Class III materials and services. All process equipment not considered Class I or Class II and critical (data quality-affecting) materials and services identified by the ACL.

Commercial grade dedication. An acceptance process undertaken to provide reasonable assurance that a CGI to be used as a basic component of an SSC will perform its intended safety function. A CGS applied to an SSC will provide acceptable results. The process includes the identification of critical characteristics and their verification by one or more of the acceptance methods. The selection of a method is based on factors such as (1) an item's critical characteristics, (2) available supplier information, (3) item quality history, and (4) the degree of standardization of the item.

Commercial grade item. **EITHER** (1) a commercial grade item as defined in ASME NQA-1-2008, Quality Assurance Requirements for Nuclear Facility Applications, **OR** (2) an SSC, or part thereof that affects its safety function that was NOT designed and manufactured in accordance with ASME NQA-1.

Commercial grade service. A service that will affect equipment that performs a safety function and that is not provided in accordance with the requirements of ASME NQA-01.

Engineered item. Systems, structures, components, or other noncataloged products in which their design, manufacture, or fabrication is directly affected or directed by an AMWTP-produced specification or drawing or a specification or drawing produced for the AMWTP by a subcontractor.

Hazardous area. An area where hazardous substances (i.e., hazardous chemicals, biohazardous agents, and radioisotopes) and/or physical hazards (e.g., radiation, lasers, moving machinery parts, noise, extreme temperatures, and electrical apparatus) are present.

Hazardous work. A combination of dynamic and complex tasks associated with the erection, installation, assembly, demolition, maintenance, or fabrication activities involved in the creation of new, alteration, fabrication, repair, or rehabilitation of structures. Includes, but is not limited to tasks involving hoisting and rigging, work at heights, flame or spark producing activities, excavation, electrical work, lockout/tagout (LO/TO), heavy equipment operation, confined space entry, use or delivery of highly hazardous materials or chemical controlled by the Resource Conservation and Recovery Act (RCRA) permit, use of ladders or aerial personnel lifts, entry into radiological controlled areas, or entry into waste storage, treatment, or retrieval areas.

Onsite work. Work performed within the physical boundaries of an AMWTP controlled area or facility (excludes leased facilities when work is performed by lessor). Does not include pre-performance, coordination, or progress meetings, or other onsite administrative activities determined incidental to work performed predominantly offsite.

Ozone depleting substance. Any substance designated as a Class I or Class I substance by the Environmental Protection Agency (EPA) in 40 CFR 82, Protection of Stratospheric Ozone.

- Class I includes the fully halogenated chlorofluorocarbons, halons, and the ODSs that are the most threatening to the ozone layer.
- Class II compounds are those substances that are known or reasonably anticipated to have harmful effects on the stratospheric ozone layer. Class II substances are hydrochlorofluorocarbons.
- Controlled substances. Class I or Class II ODSs.

Procurement documents. Includes purchase requisitions, purchase orders, subcontracts, solicitations, design documents and technical specifications, and scope of work used to define requirements for purchasing.

Procurement specialist. Individual within Procurement who receives the approved PR, processes the PR, prepares and issues solicitations, and awards the purchase orders/subcontracts.

Purchase requisition. The initiating document requesting and specifying a procurement action.

Ratification. The formal act of approving, after the fact, a commitment that has been made by an individual who did not have the authority to do so.

Requester. Person(s) requesting a procurement action and responsible for initiating, preparing, and coordinating approval of a PR.

Responsible manager. Any person responsible for the budget or project. This does not necessarily require a management title.

Required reviewer. The individual identified by the requester responsible for coordinating and resolving all submittal comments from AMWTP reviewers and determining the final disposition of submitted items.

Staff augmentation. Subcontractor personnel acquired to provide services at a specified hourly rate under AMWTP direction in accordance with AMWTP procedures and policies. These individuals typically work at AMWTP facilities using government equipment to accommodate workload demands that cannot be performed by employees because of a lack of resources.

Statement of work. A detailed written description of work required to be performed under contract. It may be supplemented by engineering design specifications or design proposal drawings.

Subcontract oversight team. Team of functional representatives responsible for oversight and approval of subcontractor work being performed at the AMWTP.

Subcontract technical representative. Qualified individual responsible for field coordination, direction, and oversight of construction subcontractors performing work at the AMWTP. Individual must have completed Qualification Checklist QCSTR.

Submittal. Any item contractually required to be provided by the vendor (submitter) to be submitted for review. Submittal items include, but are not limited to, the following: shop or working drawings; schematics; calculations; manufacturer's standard data; brochures; installation, erection, application, and placing instruction; product data; samples and mockups; inspection and test reports; certificates of compliance; operating and maintenance manuals; bills of material; mill test reports; progress schedules; warrantees and guarantees; work plan; schedule; and administrative items.

Task Baseline Agreement. A document used to reflect agreement with scope, schedule, and cost for services provided by ICP or INL contractors.

Vendor. Non-AMWTP individual/company responsible for delivery of materials or equipment services as skill of the craft, and the delivery activity is not considered hazardous.

Vendor (supplier) data. Supplier-furnished data (except pre-award submittals) required by the purchase order or subcontract for AMWTP review and/or approval.

5.0 REFERENCES

(1) 10 CFR 707, Workplace Substance Abuse Programs at DOE Sites

(2) 10 CFR 830, Nuclear Safety Management

(3) 10 CFR 851, Worker Safety and Health Program

(4) 40 CFR 82, Protection of Stratospheric Ozone

(5) ASME NQA-1-2008, Quality Assurance Requirements for Nuclear Facility Applications

(6) IEEE 1680 Standard for the Environmental Assessment of Personal Computer Products

(7) Davis Bacon Act of 1931

(8) DOE O 450.1A, Environmental Protection Program

(9) Executive Order 13514, Federal Leadership in Environmental, Energy, and Economic Performance

(10) Form-1018, Position Description

(11) Form-1023, Medical Job Function Analysis

(12) Form-1172, Software Quality Plan

(13) Form-1262, Noncompetitive Procurement Justification (NCJ) (For NCJ Procurement Exceeding $25,000)

(14) Form-1263, Organizational Conflicts of Interest Disclosure Statement (OCI)

(15) Form-1266, Submittal Cover & Transmittal Form

(16) Form-1347, Request for Information

(17) Form-1366, New Chemical Request Form

(18) Form-1448, Notice to Code Spares

(19) Form-1639, Subcontractor Safety Performance Evaluation Form

(20) Form-1654, Request for Shipments/Transfer of Property

(21) Form-1778, Authorization Request for Procurement or Receipt of Sealed Radioactive Source Nuclear Material

(22) Form-1802, Vendor Data Submittal Register

(23) Form-1808, Medical History

(24) Form-1898, Supplier Performance Evaluation Rating Form Services

(25) Form-1968, Check Request

(26) Form-1970, Subcontract Oversight Team Checklist

(27) INST-CD&M-11.1.3, Approved Equivalent Parts

(28) INST-CD&M-11.1.5, Commercial Grade Item/Service Dedication

(29) INST-CD&M-11.2.2, Software Inventory Classification

(30) INST-COPS-9.18.4, Hazard Assessment

(31) INST-OI-24, Packaging Radioactive Waste

(32) MP-CD&M 11.2, Software Quality Assurance

(33) MP-CD&M-11.3, Design Control

(34) MP-CD&M-11.5, Drawing Control

(35) MP-CD&M-11.7, Documenting Engineering Specifications

(36) MP-CMNT-10.19, Computerized Maintenance Management System

(37) MP-COPS-9.18, Work Management, Planning, and Control

(38) MP-DOCS-18.2, Records Management

(39) MP-DOCS-18.4, Document Control

(40) MP-ISIH-2.5, Hazard Communication Program

(41) MP-M&IA-17.2, Independent Assessment

(42) MP-M&IA-17.3, Quality Assurance Surveillance

(43) MP-PCMT-15.21, Material Management

(44) MP-PCMT-15.22, Purchase Card Program

(45) MP-Q&SI-5.3, Corrective Action

(46) MP-Q&SI-5.4, Identification of Nonconforming Conditions

(47) MP-Q&SI-5.6, Graded Approach

(48) MP-SCTY-16.4, Foreign National Access

(49) MP-SCTY-16.10, Nuclear Material Source Control

(50) MP-SCTY-16.11, Personnel Security

(51) NQA-1-1989, Quality Assurance Program Requirements for Nuclear Facilities

(52) NQA-2a-1990 addenda, Requirements of Computer Software for Nuclear Facility Applications

(53) RPT-DSA-02, Documented Safety Analysis

6.0 RECORDS

Records generated by this procedure are classified in accordance with the table below and dispositioned in accordance with MP-DOCS-18.2, Records Management.

Record Description	Classification	
MP-PCMT-15.1, Acquisition of Materials and Services, Case File	Nonpermanent WIPP /ENV1-J-1/ Destroy 75 years after submittal	
Class I, II, and III Purchase Order or Contract Transactional File* • Form-1087, Quality Program Evaluation Report (as applicable) • Form-1255, Receiving Inspection Report (as applicable) • Form-1373, Standard Procurement Quality Clauses (as applicable) • Form-1851, Procurement Closeout Checklist (as applicable) • Form-1948, Onsite Hazardous Services Statement of Work (SOW) • Form-1964, Commercial Grade Item/Service Dedication Form • Form-2011, Statement of Work (SOW)	Determined by the specific procurement transaction file	
	• Non-WIPP-related procurement files, including contracts, SOW, requisition, purchase orders, lease, bond, etc. >$100,000 and construction contracts exceeding $2,000.	Misc. Other Records/ A3-3-a-1-a Submit to RMC after final payment, Destroy 6 years and 3 months after final payment.
	• Non-WIPP-related procurement and P-card files, including contracts, requisitions, purchase orders, and related correspondence <$100,000 and construction contracts exceeding $2,000.	Misc. Other Records/ A3-3-a-1-b, Submit to RMC after final payment. Destroy 3 years after final payment.
	• Request for proposals/Purchase Orders/Subcontracts FOR QUALITY SIGNIFICANT PROCUREMENT Facility/equipment procurement packages exceeding $100,000 and construction contracts exceeding $2,000.	Misc. Other Records/ A18-35-b Submit to RMC after final payment. Destroy upon permanent removal of item from service or upon permanent termination of items use, unless the document will be applicable to a replacement item.

Record Description	Classification
Purchase Order or Contract File for Transaction <$100K*	Misc. Other Records / A3-3-a-1-b / Submit to RMC after final payment. Destroy 3 years after final payment.
Purchase Order or Contract File for Transaction >$100K*	Misc. Other Records / A3-3-a-1-a / Submit to RMC after final payment. Destroy 6 years and 3 months after final payment.
*The following forms may be part of a Contract Transaction File, as applicable: Form-1255, Receiving Inspection Report; Form-1639, Subcontractor Safety Performance Evaluation Form; Form-1262, Noncompetitive Procurement Justification (NCJ) (For NCJ Procurements Exceeding $25,000); Form-1263, Organizational Conflicts of Interest Disclosure Statement (OCI); Form-1266, Submittal Cover & Transmittal Form; Form-1373, Standard Procurement Quality Clauses; Form-1448, Notice to Code Spares; Form-1851, Procurement Closeout Checklist; Form-1898, Supplier Performance Evaluation Rating Form Services; Form-1087, Quality Program Evaluation Report; Form-1802, Vendor Data Submittal Register; Form-1948, Onsite Hazardous Services Statement of Work (SOW); and Form-2011, Statement of Work (SOW).	

7.0 EXHIBITS

None

8.0 APPENDICES

Appendix A – Onsite Service Acquisition

Appendix B – Subcontract Technical Representative Program

Appendix C – Vendor Data Processing Requirements

Appendix D – Standard QA Procurement Clauses

Appendix E – Supplier Qualification

Appendix F – Supplier Performance Evaluation Program

Appendix G – Subcontractor Oversight Team

Appendix H – Emergency Procurements

Appendix I – Commercial Grade Dedication

Appendix J – Description of Forms

Appendix K – Sustainability Requirements in Purchase Orders and Subcontracts

Appendix A -
Onsite Service Acquisition

The AMWTP uses a graded approach to the application of the ISM and 10 CFR 851 program requirements to work being performed at the AMWTP.

In order to ensure that all subcontractors perform their work safely and their work practices conform to the principles of ISMS and the requirements of 10 CFR 851, as applicable, the following process must be followed.

NOTE: *Subcontracts for staff augmentation and professional services do not require incorporation of ISMS requirements or Voluntary Protection Program (VPP) principles, as these personnel participate via the AMWTP ISMS/VPP programs. The requester or designee will provide a safety and health briefing to these personnel to familiarize them with facility hazards, evacuation information, stop work authority, and other applicable elements of AMWTP's Worker Safety and Health program.*

Subcontractors performing work at the AMWTP generally fall within four categories:

1. Peripheral services, which include delivery of supplies, pick up of laundry, routine maintenance (office equipment type maintenance), and so forth.

NOTE: *Peripheral services are not considered to be work in furtherance of the DOE mission at AMWTP facilities.*

2. Staff augmentation or level-of-effort with no deliverables

3. Onsite hazardous work

4. Onsite nonhazardous work (level-of-effort with deliverables).

The processes and requirements herein are mandatory for staff augmentation, hazardous work, or work being performed in a hazardous area.

1. Subcontractors performing work that is in furtherance of the DOE mission at AMWTP facilities are subject to the requirements of 10 CFR 851 as follows:

   Staff Augmentation Process Requirements

   (Assumption: Subcontractor personnel will be covered by the AMWTP Worker Safety and Health Program and, for purposes of safety and health, treated the same as AMWTP employees.)

A. Requester must complete Form-1023, Medical Job Function Analysis, for each position and include as an attachment to the PR.

   a. If the duration of subcontractor work is 6 or more months, then the Requester must complete Form-1018, Position Description, for each position and include as attachment to the PR.

   b. If the duration of subcontractor work begins under 6 months and then is extended, then the Requester must complete Form-1018 for each position and include as an attachment to the extension PR.

B. Procurement may include Form-1023 with a Request for Proposal (RFP) for use by the subcontractor in screening applicants.

C. Procurement forwards the candidate's resume to the requester who selects personnel and then notifies Procurement.

D. If the selected individual is a retiree from INL/ICP/AMWTP contractor, the Human Resources (HR) manager or designee must approve the transaction prior to award.

E. Procurement transmits Form-1808, Medical History, to the subcontractor for completion by selected candidate(s), and submits the completed forms to the Site Occupational Medical Director (SOMD) at omp@amwtp.inl.gov or fax to 208-557-7362 to determine the medical screening needed. The SOMD provides approval to proceed to Procurement.

F. Procurement notifies the subcontractor of the report date for selected personnel and inserts the appropriate clause in the subcontract.

G. HR facilitates physical, drug screen, and required training, as appropriate.

H. The SOMD determines if review of the subcontractor Employee Assistance Program is required. Procurement will obtain and distribute.

I. Requester is responsible for keeping Form-1023 current with the job assignment.

J. Requester must ensure that subcontractor personnel comply with all safety, health, environmental, security, work control, and performance requirements.

K. Procurement transmits Form-1018 to the Training Department (training@amwtp.inl.gov) and the Training Department is responsible for keeping and maintaining Form-1018.

L. The SOMD is responsible for maintaining personnel medical history records.

M. Upon release, the SOMD is to offer a general health evaluation.

Onsite Hazardous Work or Work Being Performed in a Hazardous Area

A. Requester develops Form-1948 (Sections 6, 7, and 8 are to be completed by ES&H).

B. Requester generates the work order in accordance with MP-CMNT-10.19, Computerized Maintenance Management System.

C. Requester obtains a Davis-Bacon Act determination.

D. Procurement develops the RFP, incorporating the SOW and other applicable documents. The SOT reviews and approves the RFP package prior to release (Form-1970, Subcontract Oversight Team Checklist).

E. Proposal(s) evaluated for responsiveness to requirements (requester, ES&H, and QA).

F. The SOT approves the selected subcontractors for award (Form-1970).

G. The Procurement Specialist inserts the appropriate clause in the subcontract and awards the subcontract.

H. Responsible manager or the STR is responsible for verifying that all pre-work requirements are met.

I. Responsible manager or the STR works with the Procurement Specialist to obtain all required information, documents, records, work plans, schedules, and so forth from the subcontractor.

J. Responsible manager or the STR helps resolve subcontract and schedule issues during all phases of the subcontract.

K. Responsible manager or the STR assists with subcontract closeout.

L. The SOT confirms that the subcontractor is ready to perform work and authorizes a Notice to Proceed (Form-1970) by verifying the following:

- Health and Safety Plan is approved

- Training/qualification documentation has been received and accepted
- Work plan and schedule are approved
- Work plan has been incorporated into work orders
- Subcontractor is authorized to commence onsite work.

M. Upon subcontractor mobilization, the requester, responsible manager, or STR is required to:

- Provide a safety and health briefing to subcontractor personnel to familiarize them with facility hazards, evacuation information, the AMWTP work control process, stop work authority, and other applicable elements of AMWTP's health and safety program
- Validate training requirement documentation
- Ensure that work will conform to MP-COPS-9.18, Work Management, Planning, and Control Procedure
- Identify any jobsite hazards, and establish controls to prevent/mitigate potential or actual hazards
- Ensure subcontractor participation in Formal Hazardous Analysis in accordance with INST-COPS-9.18.4, Hazard Assessment
- Should a change in the work scope be identified subsequent to award, requester must conform to the steps in Section 3.7
- Participate in postcompletion performance evaluations, as required.

Onsite Nonhazardous Work

A. Requester develops Form-2011 and includes it with the PR.

B. The Procurement Specialist inserts the appropriate clause in the subcontract and awards the subcontract.

Appendix B -
Subcontract Technical Representative Program

This appendix defines the STR Program for hazardous work being performed by subcontractors at the AMWTP. The STR provides field coordination, direction, and oversight to subcontracted work. The STR provides the bridge between administrative and technical roles and responsibilities, serving as the field representative for both the Procurement Specialist and the requester. The STR Program is intended to ensure that personnel are identified, approved, qualified, and appointed to support and administer subcontracted onsite work.

1. GENERAL

A. The Contracts and Logistics Manager establishes, maintains, and manages the STR Program as defined by this appendix.

B. The responsible manager identifies STR candidates and identifies in advance STR needs and resource requirements, ensuring availability and assignment of trained and qualified STR personnel, as required. The STR assignments are optional for:

- Onsite hazardous work other than construction
- Servicing of commercially manufactured equipment by authorized service and/or repair personnel.

2. CANDIDATE SELECTION

A. STR Selection Guidance

Candidates for STR assignments possess a broad background in a variety of business and/or technical fields. Candidates possess sufficient communication and leadership skills to effectively represent the company in a business relationship with subcontractor management and staff. The STR candidates are self-starters, require minimal supervision, communicate effectively, and work exceptionally well in a team environment. As applicable to the nature, complexity, and location of the work, additional consideration is given to the following:

- General working knowledge of SSCs affected by subcontracted work
- General knowledge and understanding of ISMS concepts and requirements
- General knowledge of company business systems for documents, vendor data, and procurement.

3. TRAINING AND QUALIFICATION

A. Qualification

- The Contracts and Logistics Manager establishes and maintains STR qualification requirements by performing/coordinating the following:

  – Establishes, maintains, and delivers core training associated with QCSTR requirements. Additional STR training requirements may be established. Training records are maintained in TRAIN.

  – Ensures and verifies that all personnel assigned to the STR role are approved through execution of an interim, short form, or core QCSTR prior to performing the STR function.

4. APPOINTMENT/DELEGATION

A. The Contracts and Logistics Manager issues a Letter of Appointment to each STR who successfully completes QCSTR, which may include commitment authority.

- Upon completion of assignment or expiration/suspension of the STR qualification, the Contracts and Logistics Manager revokes the Letter of Appointment.

B. The STR acknowledges and accepts responsibilities in the Letter of Appointment.

C. The responsible manager, upon termination of employment, reassignment of job responsibilities, or any other action that results in an STR no longer requiring the QCSTR, notifies the Contracts and Logistics Manager of such event and requests that the STR Letter of Appointment be revoked.

5. CONTRACT AWARD

A. The STR participates in a pre-performance meeting(s) with the appropriate subcontractor representatives and ensures that all have a common understanding and awareness of all contract requirements, milestones, and deliverables.

6. TECHNICAL ADMINISTRATION

A. The STR provides technical coordination, control, and oversight to each assigned contract to ensure subcontractor compliance with environment, security, safety, health, and work control requirements.

B. The STR coordinates activities with other company functional representatives and ensures effective involvement and participation.

C. The STRs are responsible to know onsite physical work being performed by subcontractors on their assigned project(s), including knowledge of lower-tier subcontractors and deliveries/returns by suppliers.

- The STR provides approval, in advance, of any physical work performed after regular work hours.
- The STR informs the plant manager or designee of the physical work being performed after regular work hours in advance of performance.
- The STR may review invoices to ensure that charges are in agreement with contract terms prior to authorizing payment.

7. CHANGE CONTROL

A. The STR authorizes and the Procurement Specialist processes all changes during the established performance period of an existing contract subject to concurrence from other functional representatives (e.g., ES&H and QA).

8. CLOSEOUT

A. The STR completes the following remaining actions/tasks:

- Compiles and submits the final subcontractor evaluation to the Procurement Specialist
- Ensures Form-1964 is completed with all items accepted and delivered to Procurement for retention as a record
- Develops and distributes applicable Lessons Learned.

Appendix C -
Vendor Data Processing Requirements

Purpose

This appendix describes the process by which vendor data are identified to suppliers and processed through the AMWTP review and approval cycle.

Submittal items include, but are not limited to, design, shop or working drawings, schematics, calculations, manufacturer's standard data, brochures, installation, erection, application and placing instruction, product data, samples and mockups, inspection and test reports, certificates of compliance, operations and maintenance manuals, bills of material, mill test reports, progress schedules, wiring diagrams, motor data, test reports and procedures, personnel qualifications and certifications, material certifications, fabrication techniques, and software development and baseline documents.

Vendor data, for purposes of this appendix, are data identified as specific data deliverables within a specification, SOW, or by incorporation of a Quality Clause (e.g., QC-27, Manufacturing, Inspection and Test Plan). This process does not apply to data that are identified as "with shipment" and/or "for information only" or to data received for administrative purposes, such as ES&H reports, certificates of compliance, invoices, progress reports, and so forth.

1. The Procurement Specialist will receive, log, maintain status and control, and coordinate reviews for all vendor data submittals as identified in the purchase order/subcontract.

2. The following outlines the process for initial receipt, logging, distribution, and documentation of vendor submittals identified on Form-1802, received by the Procurement Specialist.

    A. The submittal item and date of receipt shall be recorded on Form-1802.

        - The log shall be maintained regularly and used to track submittal due dates (within 10 working days of issue to reviewers) and turnaround dates for the review process.

    B. The Procurement Specialist is responsible for verifying that submitted items match the numbering and description of items listed on Form-1802 and that the number of copies and originals match the requirements of the subcontract/purchase order.

NOTE: *Electronic submittals should be encouraged.*

C. All submittals shall be sent with Form-1266, Submittal Cover & Transmittal Form.

NOTE: *Form-1266 contains routing blanks, date slots, and signature blanks in Section II that may be used for routing or a transmittal letter may be used.*

- The requester shall enter a required review completion date in Section II of Form-1266.

- The requester should return reviewed submittals with all required signatures with comments to the Procurement Specialist on or before the required review completion date.

D. Immediately after initial processing, the Procurement Specialist shall route the submittal(s) to the requester and any other reviewer required in the *procurement documents* (see def.) or that the requester has designated.

3. Review Process

A. A *required reviewer* (RR; see def.) shall be assigned to each purchase order/subcontract or design/procurement package prior to the receipt of submittals.

B. The RR is responsible for managing and expediting the routing and review process and ensuring that review is complete and back to the Procurement Specialist within the time allotted by the required review completion date on Form-1266.

C. The RR is responsible for comment resolution with secondary reviewers and final comment and disposition on the submittal items.

D. The RR shall determine the final disposition of the submittal and enter the required data and disposition status on Form-1266.

E. Upon completion of review and dispositioning, the RR shall sign, date, and return Form-1266 with a copy of the marked-up submittal item, other reviewer comments, and any additional comments to the Procurement Specialist.

- Review documentation shall be maintained in the procurement/contractual records file.

4. Resubmittal Process

   A. The Procurement Specialist shall update Form-1802 to reflect the completed review and disposition of each submittal item.

      - If resubmittal of a data item is required, a new due date shall be entered and tracked as necessary.

   B. The Procurement Specialist will file one copy of the reviewed submittal and completed Form-1266 in the procurement file.

   C. After secondary processing, Form-1266 and the reviewed submittal will be returned to the supplier with comments and revisions attached.

5. Subcontractor Submittal Records

   A. The RR shall coordinate the AMWTP reviews to ensure the supplier complies with the submittals requirements and ensure submittals are submitted on the appropriate forms.

   B. The Procurement Specialist must file a copy of the reviewed submittal and Form-1266 in the appropriate purchase order or subcontract file.

Appendix D -
Standard QA Procurement Clauses

NOTE: *Full clause text is provided on Form-1373.*

General Requirements

Standard procurement quality clauses have been established and are required for Class I, II, and III material and service acquisitions to facilitate the identification and flowdown of specific requirements to suppliers. Clauses have been categorized and organized to establish a systematic identification system based on the AMWTP graded approach and to facilitate clause selection and consistency to ensure only acceptable items and services are authorized by the AMWTP procurement system.

- AMWTP structures, systems, and components (SSCs) are categorized by significance, risk, and consequence of failure. The AMWTP SSCs include hardware and software. Procurement quality requirements are based on the classification of the procured material or service.

Standard QA clauses are imposed based on a combination of SSC classification and technical requirements from the SOW, drawings, and/or specifications. This provides the mechanism to apply the appropriate level of requirements for a commercial grade item or service as opposed to those that would be required for an engineered item or technical service.

This appendix identifies the minimum mandatory QA clauses to be utilized by all requesters of purchases for items and services intended for use at the AMWTP facilities. These minimum requirements must be considered in procurement planning. Consideration must be given to additional QA clause requirements based on the specific technical requirements for purchases. For example, special QA clauses have been developed for specialty equipment such as high-efficiency particulate air filters; other considerations include requirements for potential suspect counterfeit items and shelf life information requirements, if appropriate, for the type of item or material being procured.

Purchase Requisition Preparation

- Requesters must identify the minimum QA clauses in accordance with this appendix when preparing PRs for Class I, II, and III material and service acquisitions.

- Requesters are responsible to ensure any additional requirements are identified based on the technical scope of work.

- All requests for acquisition of material, including engineered items, requiring a supplier release prior to shipment, shall include clause QC-33.

- All requests for acquisition of Class I materials and services shall include clause QC-40.

- This appendix shall be used for identification of applicable quality clauses (Form-1373 or PR).

STANDARD MANDATORY QA CLAUSES

QA Procurement Clause Cross-Walk

Scope	Commercial Grade Items	Services	Engineered Items
Class I Equipment identified by the Documented Safety Analysis as Safety Class or Safety Significant SSC. Class I SSCs are those items whose failure presents the highest potential safety consequence and project risk. Class I SSCs are identified as Q-Listed SSCs.	QC-1 QC-2 QC-13 QC-16 QC-21 QC-35 QC-40	QC-1 QC-2 QC-40	QC-1 QC-2 QC-3 or QC-41 QC-7(1) QC-8(2) QC-9 QC-10 QC-11 QC-12 QC-13 QC-16 QC-21 QC-25 QC-26 QC-27 QC-28 QC-35 QC-40

(1) NQA-1-1989, Quality Assurance Program Requirements for Nuclear Facilities, is required for Waste Isolation Pilot Plant (WIPP)-related SSCs.

(2) NQA-2a-1990 addenda, Part 2.7, Requirements of Computer Software for Nuclear Facility Applications, is required for WIPP-related software systems.

STANDARD MANDATORY QA CLAUSES

QA Procurement Clause Cross-Walk

Scope	Commercial Grade Items	Services	Engineered Items
Class II Equipment controlled or designated by the Documented Safety Analysis as "Other Items Important to Safety," by statutory requirements, by WIPP requirements, or certain safety equipment required by Permit, or where a failure could directly cause injury to personnel through a conventional or radiological means.	QC-1 QC-2 QC-13 QC-16 QC-21 QC-35	QC-1 QC-2	QC-1 QC-2 QC-3 or QC 41 QC-7(1) QC-8(2) QC-9 QC-10 QC-11 QC-12 QC-16 QC-21 QC-25 QC-26 QC-28 QC-35

STANDARD MANDATORY QA CLAUSES

QA Procurement Clause Cross-Walk

Scope	Commercial Grade Items	Services	Engineered Items
Class III All process equipment not considered Class I or Class II	QC-1 QC-2 QC-13 QC-21 QC-35	QC-1 QC-2	QC-1 QC-2 QC-10 QC-13 QC-21 QC-35
Non-Quality Category (NQ) Any item or service that is not affected by the Authorization basis, WIPP, or non-nuclear regulations and is not a part of the plant or production process SSCs.	To be determined as required by the requester	To be determined as required by the requester	To be determined as required by the requester
Suspect marginal decisions will always default to the more rigorous approach.			

Appendix E -
Supplier Qualification

The acquisition of items and services is controlled to ensure conformance with specified requirements. Accordingly, supplier evaluations are performed and documented to evaluate the supplier's capability to provide items and services in accordance with purchase order/subcontract requirements.

Quality Assurance approves Class I and Class II suppliers of noncommercial grade items and services affecting quality or safety. The review and approval of supplier's QA program is completed prior to purchase order award. Suppliers of commercial grade and Class III items and services are evaluated using a graded approach or as directed by the QA Manager or designee, based on the complexity and importance to safety and mission objectives.

Review and approval of a supplier's QA program is not required in cases where other DOE facilities (e.g., Carlsbad Field Office) maintain oversight responsibility for supply of noncommercial grade items and services affecting quality. Additionally, QA program evaluations are not required for DOE contractors who provide items and services affecting quality and safety.

The AMWTP uses desktop and/or source evaluations as a basis for accepting or rejecting a suppliers' quality program. The determination of evaluation type is made by the QA Manager or designee.

When approved by the QA Manager or designee, Class I and Class II suppliers of noncommercial grade items or services affecting quality and safety are identified on the AVL. Purchases of Class I and Class II noncommercial grade items and services are made only from suppliers listed on the AVL. Proposals may be solicited from suppliers not listed on the AVL; however, prior to purchase order award, the supplier's QA program shall be evaluated as described above.

Class I and Class II CGIs and services may be solicited from suppliers listed on the AVL.

This appendix specifies the process for evaluating suppliers to determine capability to meet the quality requirements of materials and services. It applies to the evaluation of suppliers of Class I and Class II materials and services who are not on the AVL. It may also be used for evaluating other suppliers, as appropriate, such as vendors supplying items or services for the ACL in accordance with ISO/IEC 17025:2005 or other applicable standards.

The QA evaluations of supplier implementation and conformance to procurement requirements are conducted through QA assessments or surveillances in accordance with MP-M&IA-17.2, Independent Assessment, or MP-M&IA-17.3, Quality Assurance Surveillance.

Desktop reviews are conducted using Form-1087, Quality Program Evaluation Report, which includes the necessary criteria addressing the regulatory and contractual requirements of the QA Program.

Source evaluations are conducted in accordance with MP-M&IA-17.2.

New Vendors

1. The QA Manager or designee shall:

   A. Determine the vendor evaluation criteria based on the complexity, application, quality, and safety significance of the item/service

      1) Criteria may be used from applicable standards such as 10 CFR 830, Nuclear Safety Management, NQA-1 2008, NQA-1 1989, as well as other industry standards.

   B. Evaluate the technical and quality requirements to determine the evaluation methodology and assign a QA evaluator. Evaluation methodologies include:

      1) Desktop reviews using Form-1087 include:

         i. Review of the prospective vendor's current QA program document, with evidence of approval or endorsement by senior management.

         ii. Review of a listing or matrix of quality implementing procedures (if required to support the evaluation).

         iii. DOECAP supplier evaluations can be used for vendor acceptance. Review and acceptance of identified DOECAP findings/deficiencies will be documented on Form 1087.

         iv. For suppliers of ACL Class III certified reference materials or other analytical consumables, documentation of current accreditation status and appropriate scope, without further documentation.

      2) Source evaluations are conducted in accordance with MP-M&IA-17.2 when deemed necessary to assure conformance with contractual requirements.

      3) Surveillances, in accordance with MP-M&AI-17.3, Quality Assurance Surveillance, may be conducted when deemed necessary to assure conformance with contractual requirements.

2. The QA evaluator shall:

   A. Evaluate the vendor's program documents against the specified evaluation criteria and the technical and quality scope

   B. Follow up with prospective suppliers on identified issues, if required

   C. Document the results and recommendations from the evaluation on Form-1087 and submit the completed report to the QA Manager for review.

3. The QA Manager or designee shall evaluate the results of the desktop review and perform the following:

   A. Add vendor status to the AVL

   B. Identify any restrictions on qualification

   C. If any identified issues cannot be fully resolved, the QA Manager or designee, Procurement, and the cognizant technical representative will evaluate the issues for impact and determine the appropriate actions

   D. Maintain the QA evaluation with the QA vendor files

   E. Initiate an Action Item for identified issues and associated compensatory measures where needed.

4. If it is determined that the vendor must be used, a determination of compensatory measures that must be taken to address the deficiency in the vendor's QA program must be documented as an Action Item and approved by the QA Manager or designee.

5. The compensatory measures will be provided to Procurement, the cognizant technical representative, and the supplier (by Procurement).

6. Document any such compensatory measures on the AVL and, if applicable, incorporate into the purchase order.

Existing Vendors

1. The QA Manager or designee shall assign a QA evaluator to conduct a re-evaluation of an approved vendor when notified of a revision to the vendor's accepted QA Program.

2. The QA evaluator will use the original review checklist as a guide to verify the program still complies with the evaluation criteria.

   A. If the change negatively impacts the vendor commitments, document the impacts on Form-1087 and provide the results to the QA Manager.

   B. Data from Procurement's Supplier Evaluation Program will be evaluated for any negative trends.

   C. The QA Manager will determine the need for further actions, which may include disqualification of the vendor.

Source Evaluations

1. QA Manager: Determine the need for performance of Source Evaluations, and ensure that evaluations are scheduled and conducted as early as practical after contract award.

2. Assign a certified lead auditor to conduct the source evaluation. Source Evaluations are conducted and documented in accordance with MP-M&IA-17.2.

Appendix F -
Supplier Performance Evaluation Program

Purpose: Provide requirements for the purpose of comprehensive and systematic review and evaluation of supplier performance through routine and periodic collection of performance data. Supplier performance evaluation data are utilized to identify and retain suppliers that provide satisfactory or better materials and services and eliminate unsatisfactory performers from consideration for future procurement activity.

Performance data used include:

- Technical adequacy of items or services including data submittals
- Results from the AMWTP oversight
  (i.e., STR oversight, management assessment, and QA audits and surveillances)
- Nonconforming items or services
- Receipt inspection rejections
- Over, short, damaged, and discrepant shipments
- On-time delivery.

Supplier evaluations are based upon a review of documentation received, i.e., nonconformance reports, injury/accident statistics (onsite services), inspection reports, cost and technical reports and safety (onsite services) and technical surveillance of operation and information available via the Maximo purchasing system.

Subcontracts and purchase orders for the following do not require an evaluation:

- Services provided by affiliates
- Services provided by a federal agency, department, or commission
- Services provided by DOE contractors
- Staff augmentation
- Software providers (licensing)
- Rentals and/or leases
- Utility service provider.

Suppliers of Material

Qualifying transactions and frequency of evaluation are:

1. Blanket purchase order suppliers (annual)
2. Multiple use suppliers are defined as individual purchases totaling 12 or more in a 12-month period (annual)
3. Suppliers of Class I and II engineered materials (annual)
4. Any supplier deemed mission critical regardless of number of purchase (annual).

Process:

Suppliers will be evaluated based on the following criteria:

1. Conformance to delivery requirements is based on purchase order delivery schedules as compared to actual receipt date. Consideration will be given to events or factors outside the suppliers' control.
2. Over, short, damaged, and discrepant shipments are based on receipts over the 6-month evaluation period.
3. Receiving inspection and Quality Control (QC) rejections are based on receipts over the 6-month evaluation period. The sum of the rejected or nonconforming quantities will be compared to the total receipt quantity during the period.
4. Other —used to rate responsiveness, cooperation, and overall customer service.

Collection of relevant data will be from Maximo. The Procurement Manager or designee will analyze delivery, receiving, and other data for suppliers to determine an overall performance assessment in accordance with the scoring table below, with 1,000 total points possible. Negative trends (below 800 points) will be used to initiate corrective action or eliminate poor performers, and positive trends (over 900 points) will be used to acknowledge desired performance.

Category	Point Range	Calculation	Score
Delivery	0–300	% on time × 300	
OSD&D	0–300	% items compliant × 300	
Receiving inspection/QC rejections	0–300	% items compliant × 300	
Other	0–100	Subjective	

Example of Scoring

Delivery: 45 items on time out of 50 total = 90% on time × 300 = 270
OSD&D: 23 items acceptable out of 25 total = 92% compliant × 300 = 276
Rejections: 0 out of 20 = 100% compliant × 300 = 300
Other: no issues = 100 points
Total points received = 946 points.

Suppliers of Services

Suppliers providing services >$100,000 are evaluated on an annual basis using Form-1898, Supplier Performance Evaluation Rating Form Services, in accordance with the following criteria:

1. Safety (construction, maintenance, and infrastructure services)
2. Technical performance
3. QA/inspection
4. Delivery/schedules
5. Vendor data
6. Administration.

Procurement Specialists, based on input from the STR or requester, will complete Form-1898 and establish an overall composite score. Scores will be collected annually by the Procurement Manager. Suppliers with average scores of 900 or higher will be sent a letter recognizing excellent performance. Suppliers with average scores below 800 will be required to implement corrective action for those areas deemed deficient prior to receiving additional contracts. If the deficiency is in safety, the supplier will be immediately suspended and the ES&H Director must concur with reinstatement.

Appendix G -
Subcontract Oversight Team

This appendix defines the roles and responsibilities of the Subcontract Oversight Team (SOT) and conditions and requirements for use.

Membership

The SOT is comprised of the following personnel or delegates:

1. Plant Manager
2. Engineering Manager
3. ES&H
4. Maintenance and Landlord Manager
5. QA representative (Quality Level [QL] 1, 2, or 3)
6. Contracts and Logistics Manager.

Other functional representation may be included, consistent with the work and/or other company requirements.

Roles and Responsibilities

The role of the SOT is to ensure that work being performed at the AMWTP by subcontractors is performed safely, compliantly, and cost effectively.

The SOT is responsible for oversight and approval of subcontractor work performed at the AMWTP that is construction, equipment maintenance, facility repair, and/or waste handling. Any other work that is determined to be potentially hazardous or may be performed in a hazardous environment will also be under SOT oversight and approval.

SOT approval is required prior to issuing an RFP and notice of award and prior to the Notice to Proceed unless approved by the President and Project Manager, Vice President, Plant Manager, or Business Services Manager.

The SOT performs the following functions:

1. Reviews work control documentation to ensure it clearly defines the scope of work to be performed

2. Verifies that the hazard assessment has been completed and identified hazards are appropriately addressed or mitigated

3. Approves release of the RFP

4. Verifies that work has been scheduled and appropriate AMWTP resources are committed to support the work

5. Verifies that all subcontractor pre-work submittals, including training requirements, have been reviewed and approved, as appropriate

6. Determines the level of field oversight required for each project

7. Approves the Notice to Proceed

8. Verifies that AMWTP personnel have completed any specific training requirements needed to support the work.

Appendix H -
Emergency Procurements

This appendix describes the process by which nonquality and quality emergency procurements are managed.

1. In emergency situations, take the following steps to purchase nonquality materials and services:

   A. Plant Manager or Designee: Send an e-mail to the Procurement Manager and the on-call Procurement Specialist, identifying the material or services required.

   B. On-Call Procurement Specialist: Place a verbal order for the material or service.

   C. Plant Manager or Designee: Submit an approved PR within 3 working days of the emergency.

2. In emergency situations, take the following steps to purchase Class I, II, or III materials and services:

   A. Plant Manager or Designee: Send an e-mail to the Procurement Manager, on-call Procurement Specialist, and QA Manager or designee, identifying the material or services that are needed.

   B. QA Manager or designee: Send an "approval to proceed" e-mail to the on-call Procurement Specialist.

   C. On-Call Procurement Specialist: Place a verbal order for the material or service.

   NOTE: *Failure to submit an approved PR within 3 working days may result in a determination by the Contracts and Logistics Manager that the transaction will be treated as a ratification (see def.).*

   D. Plant Manager or Designee: Submit an approved PR within 3 working days of the emergency.

Appendix I -
Commercial Grade Dedication

NOTE: *Only commercial items or services used in safety-significant Class I application at the AMWTP are candidates for commercial grade dedication.*

QA: If the PR includes Class I CGIs or services, ensure that the planning portion of the commercial grade dedication process has been completed as required by INST-CD&M-11.1.5.

Requester: Coordinate with Engineering and QA, as needed, to identify Form-1255 acceptance criteria (including commercial grade dedication actions as required by INST-CD&M-11.1.5) necessary to confirm compliance with technical and quality requirements.

Engineering: Identify the critical characteristics to be verified by commercial grade dedication of CGIs or services for Class I applications.

QA: Review and concur with critical characteristics to be verified for commercial grade dedications.

Engineering/QA: Ensure commercial grade dedication requirements are identified or attached on Form-1255.

Engineering: For safety-significant CGIs or commercial grade services, complete the planning portion of Form-1964 and provide a copy of the form to the requester.

Requester: Attach Form-1964 to the PR.

Appendix J -
Description of Forms

Form Number	Title	Purpose
Form-1087	Quality Program Evaluation Report	Document evaluation of supplier quality programs.
Form-1255	Receiving Inspection Report	Document used for material receipt inspection.
Form-1262	Noncompetitive Procurement Justification (NCJ) (For NCJ Procurement Exceeding $25,000)	Justifies noncompetitive acquisitions.
Form-1263	Organizational Conflicts of Interest Disclosure Statement (OCI)	Organizational conflict of interest disclosure documentation.
Form-1266	Submittal Cover & Transmittal Form	Required data for review and approval.
Form-1373	Standard Procurement Quality Clauses	Defines requirements for quality clauses invoked in purchase orders and subcontracts.
Form-1448	Notice to Code Spares	Establish new materials or spares as inventory or to change existing materials or spares already in inventory.
Form-1639	Subcontractor Safety Performance Evaluation Form	Subcontractor safety evaluation for past 3 years, demonstrating Occupational Safety and Health Administration (OSHA) total recordable rates and workers compensation modification rates.
Form-1802	Vendor Data Submittal Register	Submittal registers to be completed by the requester with a description of items for the supplier to furnish to AMWTP.

Form Number	Title	Purpose
Form-1851	Procurement Closeout Checklist	Checklist used to verify that the procurement file is complete.
Form-1898	Supplier Performance Evaluation Rating Form Services	Used to document supplier performance evaluations.
Form-1948	Onsite Hazardous Services Statement of Work (SOW)	Description of services/identification of requirements for onsite hazardous work being performed by subcontractors.
Form-1964	Commercial Grade Item/Service Dedication Plan	Used to document critical characteristics, their acceptance criteria, and completion of verification activities for safety-significant, Class I and II CGIs and services.
Form-1970	Subcontract Oversight Team Checklist	Used to document Subcontract Oversight Team approval at each required step in the process to acquire hazardous onsite services.
Form-2011	Statement of Work (SOW)	Description of services requirements and identification of deliverables for work being performed by subcontractors.
Form-1018	Position Description	Description of the position that will be held by subcontractor.

Appendix K -
Sustainability Requirements in Purchase Orders and Subcontracts

A. Ensure requisition makes maximum use of biobased products that are United States Department of Agriculture (USDA)-designated items unless the product cannot be acquired:

- Competitively within a time frame provided for compliance with the subcontract performance schedule
- Meeting subcontract performance requirements
- At a reasonable price.

(Information about this requirement and these products is available at http://www.biopreferred.gov.)

B. Ensure that energy-consuming products are energy efficient products (i.e., ENERGY STAR® products or Federal Energy Management Program [FEMP])-designated products) at the time of subcontract award unless:

- The energy-consuming product is not listed in the ENERGY STAR® Program or FEMP
- Otherwise approved in writing by the Contracting Officer.

Information about these products is available for:

- ENERGY STAR® at http://energystar.gov/products
- FEMP at http://www1.eere.energy.gov/femp/technologies/procuring_eeproducts.html.

(FAR 52.223-15)

C. Ensure requisition furnishes (for contractor use at a Government-owned facility) only personal computer products that at the time of submission of proposals were EPEAT.

Silver registered or higher. Silver is the second level discussed in Clause 1.4 of the IEEE 1680 Standard for the Environmental Assessment of Personal Computer Products.

For information about the standard, see www.epeat.net.

(FAR 52.223-16)

D. Ensure requisition makes maximum use of products containing recovered materials that are EPA-designated items unless the product cannot be acquired:

- Competitively within a timeframe providing for compliance with the subcontract performance schedule
- Meeting subcontract performance requirements
- At a reasonable price.

Information about this requirement is available at EPA's Comprehensive Procurement Guidelines web site, http://www.epa.gov/cpg/. The list of EPA-designated items is available at http://www.epa.gov/waste/conserve/tools/cpg/products/index.htm.

(FAR 52.223.17)

E. Ensure requisition is compliant with initiatives that are current as of the subcontract award date.

The initiatives important to these Orders are explained on the following Government or Industrial Internet Sites:

- Recycled Content Products are described at http://epa.gov/cpg
- Biobased Products are described at http://www.biopreferred.gov/
- Energy Efficient products are at http://www1.eere.energy.gov/femp/technologies/eep_purchasingspecs.html for Energy Star products
- Energy Efficient products are at http://www.femp.energy.gov/procurement for FEMP designated products
- Environmentally preferable and energy efficient electronics including desktop computers, laptops, and monitors ate at http://www.epeat.net the Electronic Products Environmental Assessment Tool (EPEAT) the Green Electronic Council site
- Green house gas emission inventories are required, including Scope 3 emissions which include contractor emission. These are discussed at Section 13 of Executive Order 13514, Federal Leadership in Environmental, Energy, and Economic Performance, which can be found at htpp://www.archives.gov/federal-register/executive-orders/disposition.html
- Non-Ozone Depleting Alternative Products are at http;/www.epa.gov/ozone.strthome.html
- Water efficient plumping products are at http:/www.epa.gov/watersense

F. Ensure the use of products that have bio-based content, are energy efficient, or have recycled content. Provide the energy efficient and environmentally sustainable type of product, unless that type of product:

- Is not available
- Is not lifecycle cost effective or does not exceed 110% of the price of alternative items if lifecycle cost data is unavailable (EPEAT is an example of lifecycle costs that have been analyzed by DOE and found to be acceptable at the silver and gold level)
- Does not meet performance needs
- Cannot be delivered in time to meet a critical need.

(DEAR 952.223-78)

G. Maximize the use of safe alternatives to Ozone Depleting Substances, whereby:

- The use of ODS in new equipment and facilities is eliminated.
- The use of ODS in existing equipment is phased out as the existing equipment reaches its expected service life, and the maintenance of equipment is conducted to prevent or fix leaks.
- The replacement of leaking equipment is carried out when leak repair is no longer cost-effective or where it is lifecycle cost-effective to replace the equipment.
- Coordination is conducted within DOE and with the Department of Defense's (DOD) Defense Supply Center Richmond, a component of the Defense Logistics Agency, as appropriate, before disposal of ODS removed or reclaimed from equipment (including disposal as part of a subcontract, trade, or donation). For situations in which the recovered ODS is a critical requirement for DOD missions, the DOE facility transfers the ODS to DOD.

(DOE O. 450.1A)

Material Management

Advanced Mixed Waste Treatment Project

Approval:

(*Signature on file. See DCR-12120.*) 03/05/13

Date

REVISION LOG

Revision Number	Date Approved	Pages Affected	Description of Revision
0	7/12/06	All	DCR 5083. Changes to update procedure to reflect existing current practices. This document supersedes MP-CMNT-10.3, Rev. 5, Supply Change Management.
1	11/22/06	ALL	DCR-5333. Changes to update procedure to address Trackwise and Integrated Safety Management System identified actions/issues (CAR-16474, CAR-22286, CAR-22408). Formatting changes for consistency to MP-DOCS-18.3, MP-DOCS-18.4. Create Form-1767 to meet requirements of procedure. Revise various forms from procedure for consistency to revised procedure.
2	05/12/08	Various	DCR-5925. Complete rewrite to improve process of materials received at Lindsay Warehouse and closeout CAR# 37188 and CAR# 37402.
3	08/11/08	Various	DCR-7407. Provide instruction on acceptability of tagged bulk items and removal of acceptability items. Close CAR # 39461.
4	03/18/09	Various	DCR-7866. Add clarification and update additional responsibilities to close Action Item 42614 and MAR 36300.
5	07/08/09	Various	DCR-8437. Added clarification regarding Maximo usage. Deleted references to Form-1816. Updated Roles and Responsibilities and made various formatting/editorial changes in accordance with MP-DOCS-18.3.
6	04/27/10	Various	DCR-9149. Various changes for clarity and to hand off to MP-Q&SI-5.11. Add responsibilities for material management specialist to Section 2.0. Delete Exhibits 1 and 2.
7	05/01/12	Various	DCR-11078. Incorporated ITG-Bluesheet-027. Made updates based on contract changes and procedure clarifications. Minor editorial changes were made.

AMWTP MANAGEMENT PROCEDURE		
MP-PCMT-15.21, Rev. 8	Issued: 03/05/13	Effective: 03/06/13
Material Management		

Revision Number	Date Approved	Pages Affected	Description of Revision
8	03/05/13	Various	DCR-12120. To resolve Trackwise Action Item #71154.

TABLE OF CONTENTS

1.0 PURPOSE/SCOPE 1

2.0 ROLES AND RESPONSIBILITIES 1

3.0 PROCEDURE 4

3.1 Inventory Levels 4

3.2 Receipt and Inspection of Material and Equipment 5

3.3 Unsatisfactory, Over, Short, and Damaged 11

3.4 Suspect/Counterfeit Items or Material 13

3.5 Storage, Issuance, and Control of Material and Equipment 13

3.6 Bench Stock and Personal Property 16

3.7 Unsatisfactory Quality Level Material as Determined by End-User 19

3.8 Inventory, Tracking, and Shipping of AMWTP Respiratory Equipment 20

3.9 Spares/Consumables Withdrawal 21

3.10 Inventory Inspections 21

3.11 Equipment Held for Future Projects 22

3.12 Management and Control of Precious Metals 23

3.13 Return to Vendor and/or Shipment/Transfer of Government Property 23

4.0 DEFINITIONS 24

5.0 REFERENCES 25

6.0 RECORDS 26

7.0 EXHIBITS 26

8.0 APPENDIXES 27

AMWTP MANAGEMENT PROCEDURE		
MP-PCMT-15.21, Rev. 8	Issued: 03/05/13	Effective: 03/06/13
Material Management		

1.0 PURPOSE/SCOPE

This procedure provides the process for inventory management; receipt and acceptance and storage of purchased *material* (see def.); that are used at the Advanced Mixed Waste Treatment Project (AMWTP), documented on a nonconformance report (NCR) in accordance with MP-Q&SI-5.4, Identification of Nonconforming Conditions, and tagged.

This procedure applies to all AMWTP personnel involved in receipt, acceptance, and storage of items. It also applies to any and all respirators currently on-site or the purchase of any new respirators that will be used at the AMWTP.

2.0 ROLES AND RESPONSIBILITIES

Performer	Responsibilities
Procurement Manager or designee	• Provides general management and direction to ensure the safe and efficient operation of the Materials Management department.
Warehouse Supervisor	• Oversees *Supply Chain Inspector* (SCI; see def.), *Hotline/Computerized Maintenance Management System* (HL/CMMS; see def.) agent, and warehouse clerk (WC) receipt and inspection of material, distribution of material, and other warehouse operations • Ensures the initiation, tracking, and processing of required unsatisfactory, over, short, and damaged (UOS&D) forms are complete.
System Engineer (see def.)	• Reviews and approves the need for additional items and/or spares.

Performer	Responsibilities
Supply Chain Inspector	• Performs cycle/reorder inventory counts • Performs and documents receipt inspection of incoming shipments of quality items, components, equipment, and materials, and ensures parts are received, protected, stored, handled, and packaged so that identification, traceability, and condition is maintained • Stocks and applies status tagging of all received materials and spare parts • Identifies and controls materials, equipment, and items to ensure their proper use • Maintains items to prevent their damage, loss, or deterioration • Identifies and reports suspect/counterfeit items (S/CIs) • Segregates and tags items • Initiates nonconformance reports (NCRs) • Initiates, tracks, and processes required UOS&D forms.
Warehouse Clerk	• Performs and documents receipt inspection of incoming non-quality shipments to ensure that components, equipment, materials, and parts are received, protected, stored, handled, and packaged so that identification, traceability, and condition is maintained for *non-quality items* (see def.) • Identifies and controls non-quality materials, equipment, and items to ensure their proper use • Maintains items to prevent their damage, loss, or deterioration • Identifies and reports suspect/counterfeit items • Initiates, tracks, and processes required UOS&D forms • Segregates and tags non-quality items. • Performs cycle/reorder inventory counts

Performer	Responsibilities
HL/CMMS agent	• Performs and documents receipt inspection of incoming non-quality shipments to ensure that components, equipment, materials, and parts are received, protected, stored, handled, and packaged so that identification, traceability, and condition is maintained for non-quality items • Identifies and controls non-quality materials, equipment, and items to ensure their proper use • Maintains items to prevent their damage, loss, or deterioration • Identifies and reports suspect/counterfeit items • Initiates, tracks, and processes required UOS&D forms • Segregates and tags non-quality items • Kits and stages material • Performs cycle/reorder inventory counts.
Respiratory Protection Program Administrator	• Selects and procures the type of respiratory protection equipment used at AMWTP, as required by MP-ISIH-2.18, Respiratory Protection Program.
Respirator users	• Attaches a respirator inventory tag to bags of used respirators, as required by MP-ISIH-2.18.
Radiological Controls Shift Supervisor (RCSS)	• Ensures received packages containing radioactive material are monitored in accordance with MP-TRNS-20.2, Shipment and Receipt of Hazardous Materials. • Submits the results of the radiological surveys to the Warehouse Supervisor or designee. That feedback must identify any deficient or non-conforming conditions.
End user	• Implements the requirements established in this procedure for the control, storage, and tracking of material withdrawn from warehouse inventory • Maintains material acceptance status tags with quality materials and equipment withdrawn from the warehouse, until installation • Identifies the delivery/storage locations for requested material.

Performer	Responsibilities
Quality Assurance (QA) Manager/ designee	• Reports confirmed or potential S/CIs to the Nuclear Facility Manager in accordance with MP-COPS-9.6, Occurrence Reporting.
Material Management Specialist	• Processes inventory reorders • Processes work order material orders • Processes Notice to Code Spares (NTCS) • Tracks inventory usage and excess.

3.0 PROCEDURE

3.1 Inventory Levels

3.1.1 Spare parts inventory levels will be maintained using a minimum and maximum stock level that has been determined from the manufacturer's recommended spares list, number of applications, lead time, projected usage, and input from Material Management Specialist, maintenance personnel, and warehouse personnel.

3.1.1.1 Minimum and maximum inventory levels will be entered into Maximo.

3.1.1.2 A stores catalog for customer use that lists items available from stock will be made available upon request.

3.1.2 Inventory levels may be adjusted over time from lessons learned, changes in lead times, supplier reliability, and usage.

3.1.2.1 Primary and secondary supplier sources will be established for spares, where applicable.

3.1.3 When a spare part inventory level reaches the established minimum level, a purchase request will be generated by Maximo to increase inventory to the appropriate quantity based on historical usage.

3.1.3.1 The Material Management Specialist or designee will generate Form-1255, Receiving Inspection Report, for performance of receipt inspections for Maximo inventoried items.

3.1.3.2 The *Receiving Inspection Report* (RIR; see def.) generated will include the originally approved quality and technical requirements for acceptance.

3.1.4 The inventory turnover ratio should be 2.0 using activity where practical. Extreme operating circumstances may preclude the achievement of ratio.

3.1.5 Items not available in the warehouse will be requested by completing Form-1448, Notice to Code Spares.

3.1.6 Any item that will need to be maintained and tracked in Maximo or will require spare parts to be stored for the new item shall have review and approval by the Maintenance Manager or designee, or the proper department manager as well as the QA Manager or designee for Quality Level 1, 2, or 3 materials.

3.1.7 Consumable items will be ordered on an as-needed basis by following MP-PCMT-15.1, Acquisition of Materials and Services.

3.1.7.1 When necessary, consumables will be held in inventory and reordered upon pre determined reorder points.

3.2 Receipt and Inspection of Material and Equipment

NOTE: *All Non-Quality and Quality related cartons, crates, packages, etc., will be inspected for signs of visible exterior damage.*

3.2.1 If visible damage is noted, a description of the damage will be recorded on both the packing slip and receiving copy of the purchase order (PO).

3.2.1.1 If shipping damage is readily apparent during the unloading sequence (prior to receipt and inspection) and renders the material unacceptable for use, the material will be immediately segregated. The material will be dispositioned within 30 days of delivery in accordance with vendor instructions. The unaccepted material will not be tagged with an NCR.

3.2.2 The carrier's agent needs to acknowledge the damage on the receiving document by signing and dating the notated document. If the agent refuses, the agents name and carrier needs to be recorded, and the agent's refusal needs to be documented.

3.2.3 Packages with visual damage will be opened and the material inspected prior to acceptance to ascertain the extent of damage.

3.2.3.1 If UOS&D is identified, UOS&D forms need to be completed in accordance with Section 3.3.

3.2.4 Quality Level 1, 2, or 3 materials found to be non-conforming during the receipt and inspection process or prior to use will be documented on an NCR and tagged. Documentation describing any damage or rejected goods, complete with the NCR number, must be forwarded to Procurement as soon as possible for appropriate action. The NCR number shall be noted on the receiving screen in Maximo, as applicable.

3.2.5 The contents of the package will be verified by ascertaining the number of pieces received of each item as well as pertinent data concerning model, serial number, etc. This information will be reconciled against the PO and RIR technical and quality requirements and the packing slip will be signed and dated. Maximo will be updated as applicable.

3.2.6 Items designated as spares in Maximo will be tagged and stocked.

3.2.7 Non-stocked items will be authenticated by determining qualitative compliance with the specification for the material delivered, and receipt inspections performed as specified on the RIR for safety and quality significant items. Items will be delivered to the requester in a timely manner.

3.2.8 Quality Level 1, 2, or 3 materials received must be inspected and accepted or rejected according to the requirements of an RIR. Maximo will be updated as applicable.

3.2.9 All items will be tagged after receipt. Form-1170, Receipt and Inspection Tag, will be used for Quality Level 3 and non-quality affecting items. The tags will identify date, item number, PO number, received/inspected by, quality level, and acceptance or non-acceptance. A green QA Acceptance Tag will be used to status Quality Level 1 and 2 items.

3.2.9.1 Bulk quantity items, lot size items, batched items, and so forth may be tagged with a single acceptance tag to show acceptance of the entire content or lot/batch.

3.2.9.2 The SCI will ensure any Engineering or QA hold points are completed, documented, and accepted on the RIR prior to release of any items or materials for use (unless post-installation test is required).

3.2.10 The SCI shall notify the requester of the rejected items as to the status and initiate an NCR as appropriate.

3.2.10.1 The SCI must notify the Procurement Manager of each NCR upon initiation.

3.2.10.2 The SCI shall segregate rejected items to prevent inadvertent mixing with accepted items and preclude use.

3.2.10.3 The SCI shall update status tags with the NCR number to maintain traceability between the item and the documentation.

3.2.11 Non-quality consumable items are received based upon PO requirements. Quantities, descriptions, part number, and documentation will be verified by warehouse personnel. Non-quality consumables will be either stocked in the warehouse location(s) or delivered to the requester.

3.2.12 When post-installation testing is used as a method of acceptance, then post installation test requirements and acceptance documentation shall be established in the technical and quality procurement documents. All post-installation test requirements shall be specified and approved by Systems Engineering and documented on the RIR.

3.2.13 When a Certificate of Conformance is used to accept an item or material, the following, at a minimum, shall be met:

3.2.13.1 The Certificate of Conformance shall certify that item(s) or service(s) delivered under the AMWTP PO conform(s) in all respects to the PO requirements.

3.2.13.2 Certificates shall be complete, accurate, legible, and reproducible.

3.2.13.3 Incomplete or inaccurate certifications shall be refused by the SCI.

3.2.13.4 Each certification shall be issued by the designated supplier's certifying authority in accordance with established supplier certification procedures.

3.2.13.5 Unless otherwise authorized, the supplier's Certificate of Conformance shall be submitted With Shipment (WS), to the shipping destination.

3.2.14 Calibrated tools will be received based upon the quality requirements established on the requisition/PO and Form-1255 for the specific tool.

3.2.14.1 The original calibration records will be filed with Records Management via the Measuring and Test Equipment (M&TE) administrator, a copy forwarded with the tool to the requester, and a copy retained by the SCI. The M&TE administrator is responsible to update Maximo with the expiration date.

3.2.14.2 As tools require re-certification of calibration, these tools will be sent using Form-1361, Property Removal Authorization, to the calibration lab and tracked by equipment property number.

3.2.14.3 Records Management is responsible to maintain all calibration records per INST-CMNT-10.5.1, Calibration and Control of Measuring and Test Equipment.

NOTE: *It is expected that radioactive materials below the Type A quantities (as defined in 10 CFR 71.4, Definitions) will be received at the AMWTP site: however, it has been determined that these quantities will not pose a significant health hazard to the receiving individual.*

3.2.15 Upon discovery of radioactive materials below the Type A quantities, contact the RCSS in a timely manner for further guidance.

3.2.16 Receipt of items shipped as radioactive materials in excess of Type A quantity will be performed at the AMWTP site in accordance with MP-TRNS-20.2 (the delivery address will be specified on the procurement document).

3.2.16.1 The SCI shall be responsible for notifying and coordinating support from the appropriate operations and radiological departments, as required, for sealed radiological sources, radiological devices, and radioactive materials.

3.2.16.1.1 Radioactive material packages with visible damage must be evaluated by Radiological Control prior to opening or handling and must be maintained in an area that is cordoned off.

3.2.16.2 The radiological controls representative will be notified as soon as radioactive materials are delivered to the AMWTP site.

3.2.16.3 SCI/HL/CMMS/WC shall inform RCSS following the receipt of any package containing radioactive material.

3.2.16.3.1 Notification to the RCSS shall be made promptly to allow for any required radiological monitoring to be completed.

3.2.16.3.2 Radiological monitoring shall be completed as soon as practicable following receipt of the package, but no later than 8 hours after the beginning of the working day following receipt of the package.

3.2.16.4 RCSS shall ensure received packages containing radioactive material are monitored in accordance with MP-TRNS-20.2.

3.2.16.5 RCSS shall submit the results of the radiological surveys to the Warehouse Supervisor. That feedback must identify any deficient or non-conforming conditions.

3.2.16.6 Documentation will be completed and filed and Maximo will be updated with receipt information.

3.2.17 If the goods and documentation are determined to be in full compliance, the SCI will complete the RIR and sign the receipt copy. Signature of this document is a certification of acceptability.

3.2.17.1 The SCI will also ensure any QA and Engineering evaluations required by the RIR are completed and accepted prior to item or material release.

3.2.17.2 Spares that have special handling requirements and special storage requirements will be addressed during the receipt inspection.

3.2.18 SCI/HL/CMMS/WC will control original records maintained by the SCI until transferred to Records Management.

3.2.19 Property identified for tagging by Property personnel (PO, purchase card [P-card], etc.) will be tagged by Property personnel prior to being issued.

3.2.20 Returnable containers furnished by vendors must be controlled administratively and physically to ensure their prompt return to the vendors for credit after they have served their intended use.

3.2.21 Receiving Documentation

3.2.21.1 POs shall be accompanied by Form-1863, Warehouse Supporting Document File Check Sheet, to ensure that all documents are processed correctly, signed, scanned, and attached in Maximo.

3.2.21.1.1 The receiving SCI/HL/CMMS/WC will complete Form-1863, then sign and date the form.

3.2.21.2 The checklist will be scanned with all supporting documentation, and attached to the respective PO in Maximo by the receiving SCI/HL/CMMS/WC.

3.2.21.3 The *onsite* (see def.) SCI/HL/CMMS/WC receives the shipment by Lot # into Maximo.

3.2.21.4 The onsite SCI/HL/CMMS/WC scans the RIR and data package into Enterprise, attaches it to Maximo, and files the hard copies.

3.3 Unsatisfactory, Over, Short, and Damaged

3.3.1 In the event that material is received in an unsatisfactory condition, over or short of the quantity designated on the PO, or is damaged, Form-1852, Unsatisfactory, Over, Short, and Damaged (UOS&D) Material Report, shall be completed at the time of receipt. The UOS&D number should be entered on the receiving screen in Maximo as applicable.

3.3.2 UOS&D reports are to be numbered sequentially and recorded in the UOS&D log the same day received.

3.3.3 The Warehouse Supervisor or designee will be responsible for weekly reviews of the UOS&D log.

3.3.4 All UOS&D reports not completed will have weekly follow-up e-mails to ensure a timely process.

3.3.5 The SCI/HL/CMMS/WC will record description of the damage on both the packing slip and receiving copy of the PO.

3.3.6 SCI/HL/CMMS/WC shall notify Procurement of the discrepancy. In the case of damage, a copy of the UOS&D and pictures of the damage will be included.

3.3.7 Overages should be assessed by Material Management, Procurement, and the applicable organization for value and use.

3.3.8 The SCI/HL/CMMS/WC will assist Procurement in formulating a basis for subsequent refund or issuance of claims against the vendor or the carrier or for rejecting and returning the damaged goods.

NOTE: *Examples of UOS&D include but are not limited to:*

- *Damage, shortages, or overages*
- *Material received does not meet the PO specifications*
- *Serial number or model number on the documentation does not match the numbers on the item.*

3.3.9 The UOS&D form may be supported by the following documents, as applicable:

- The freight bill (with notations)
- Packing list
- Carrier's inspection report
- NCR
- Photographs
- Letter to carrier
- Letter to supplier.

3.3.10 The UOS&D form shall be completed and notification made to the following recipients:

- Procurement
- Accounting
- End user.

3.3.11 The UOS&D form is held open until resolved.

3.3.11.1 Once resolved, the SCI/HL/CMMS/WC shall initiate and complete Form-1852, to supply all additional information applicable, and notify the following recipients:

- Procurement
- Accounting
- End user.

3.4 Suspect/Counterfeit Items or Material

3.4.1 A suspect item is one in which there is an indication by visual inspection or testing, or through other information, that it may not conform to established government or industry accepted specifications or national consensus standards.

3.4.2 A counterfeit item is a suspect item or substitute without legal right or authority to do so, or one whose material, performance, or characteristics are knowingly misrepresented by the vendor, supplier, or distributor.

3.4.3 S/CIs include, but are not limited to: high-strength mechanical fasteners (e.g., bolts, washers, and nuts), lifting equipment (e.g., slings, shackles, and clevises), valves, pipe fittings, flanges, electrical circuit breakers, relays, connectors and other electronic components, lubricants, and adhesives. (See MP-Q&SI-5.11, Suspect/Counterfeit Item Identification and Control, for a more complete listing of S/CIs.)

3.4.4 Certified SCIs, the HL/CMMS, and WCs must be trained to recognize and identify indications of S/CIs.

3.4.5 For verification and inspection of materials for suspect/counterfeit indications, go to MP-Q&SI-5.11.

3.5 Storage, Issuance, and Control of Material and Equipment

3.5.1 Stored items, material, and equipment shall be maintained to prevent damage, loss, or deterioration. While in storage, status tags and other attachments used for traceability, grade, or quality acceptance purposes shall be maintained in a manner that prevents the loss or deterioration of the tag.

3.5.1.1 Warehouse personnel shall ensure that quality acceptance status tags are attached to quality materials and equipment withdrawn for use or installation.

3.5.1.1.1 Warehouse personnel will generate additional quality acceptance status tags for partial withdrawals from large lots of quality accepted materials.

NOTE: *When transferring quality level materials in operations controlled Radiation Buffer Area for contamination or for in-cell installation, the quantity of material necessary to perform task to the extent possible needs to be minimized.*

3.5.1.2 Quality acceptance status tags shall be maintained by the end user up to the installation of the material or equipment (e.g., tags may be removed at time of staging materials for in-cell installation or when transferred to operations controlled Radiation Buffer Area for contamination).

3.5.2 Items and materials received that have a Material Safety Data Sheet (MSDS) will be handled in accordance with MSDS requirements. MSDS documentation will be stored and shipped according to MSDS requirements. The MSDS will be identified on the item or materials.

3.5.3 In the absence of an MSDS, the SCI will notify the requester to initiate a new Form-1366, New Chemical Request Form, per MP-ISIH-2.5, Hazard Communication Program.

3.5.3.1 Once the MSDS has been accepted, the items will be tagged and released for use.

3.5.4 Calibrated/certified spares will be handled in accordance with manufacturer's specifications to ensure item integrity is not jeopardized.

3.5.5 Items with limited shelf or operating life cycle shall be identified and controlled.

3.5.5.1 Spares with limiting shelf/operating life cycles will be dated, tracked by Maximo, and first-in first-out approach applied to each item.

3.5.5.1.1 Items identified as having a shelf life will be classified as either nonextendable (Type 1) or extendable (Type 2).

3.5.5.1.2 Items identified as extendable and which have expired will be reviewed and tested to determine if the shelf-life period can be extended.

3.5.5.1.3 Items whose shelf/operating life cycle has expired shall be documented on an NCR to preclude use, and evaluated by the responsible system engineer and/or the process subject matter expert.

3.5.6 Inspections/calibrations of lifting/handling equipment shall be maintained current and tracked by Maximo.

3.5.7 Any items held in material storage that require periodic maintenance or testing to comply with manufacturer warranty or engineering specifications will be maintained as scheduled and tracked by Maximo.

3.5.7.1 The system engineer is responsible for development of the preventive maintenance tasks needed to support Step 3.5.7.

3.5.8 Items that require specific needs or storage such as flammable and hazardous or other material as determined at receiving inspection, will be identified, segregated, and properly stored in appropriate cabinets.

3.5.9 Control of potable alcohol will be maintained from receipt to the point of use.

3.5.9.1 Items must be maintained in a secured environment and quantities received and issued shall be identified in Maximo to allow for reporting of receipts and usage for all potable alcohol of one quart and above.

3.5.10 Controlled substances, hypodermic needles, syringes, and/or similar types of items will be managed and physically controlled, from receipt to the point of use, to prevent improper or illegal use.

3.5.10.1 Controls will include supervisory approval for issue, storage in locked repositories, and rendering items useless before disposal.

3.5.11 Access to the warehouse areas will be posted as “U.S. Government Property,” and access to these areas will be restricted to authorized personnel only.

3.5.12 Metals and metal products will be identified and marked in accordance with applicable federal standards.

3.5.12.1 Additional markings not covered by federal standards should be used to show special properties, corrosion data, or test data as required. While it is preferred that the marking be done during the manufacturing process, it may be applied by suppliers, when circumstances warrant, or waived when:

- It is necessary to procure small quantities from suppliers not equipped to do the marking
- Marking would delay the delivery of emergency orders
- Procurement is from Department of Energy (DOE) or other federal agency excess.

3.6 Bench Stock and Personal Property

3.6.1 Bench Stock

3.6.1.1 All *bench stock* (see def.) is received by the warehouse and then delivered to the authorized custodian of the bench stock for stocking in the established bench stock storage area.

3.6.1.2 Bench stock shall NOT include material that is Quality Level 1, 2, or 3, nor shall bench stock be used for quality applications. Bench stock bins will be clearly marked as non-quality material.

3.6.1.3 Bench stock shall be stored in labeled containers or shall be individually marked in the case of larger items. Bench stock shall be stored in a controlled location with access limited to those authorized to withdraw and utilize bench stock. Bench stock found to be past its use date (if applicable) or damaged shall be dispositioned in accordance with MP-PCMT-15.8, Property Management Program Procedure, or shall be considered *demonstration only items* (see def.).

3.6.1.4 An annual assessment of bench stock shall be made by the area manager or designee. The assessment will evaluate material tracking, reorders, or request for material from the warehouse, and inventory turnover. During this assessment, any materials that have not been turned over within a 90 day timeframe shall be identified and returned to warehouse stock, or re-justified as bench stock. This assessment can take the form of a Management Assessment Review (MAR).

3.6.1.5 Bench stock withdrawn and not used, or withdrawn for demonstration purposes, shall be controlled by the end user and returned to the warehouse when no longer needed.

3.6.1.6 Bench stock that has been withdrawn and for some reason cannot be returned to the approved storage location shall be dispositioned in accordance with MP-PCMT-15.8.

3.6.1.7 Bench stock that is no longer required (whether demonstration only or not) shall be disposed of in accordance with MP-PCMT-15.8.

3.6.2 Material and Equipment Control

3.6.2.1 Material includes everything (55-gal drums, ten-drum overpacks [TDOPs], standard waste boxes [SWBs], etc.) staged for operational activities, and equipment issued from inventory.

NOTE: *When transferring quality level materials in an Operations controlled Radiation Buffer Area for contamination or for in-cell installation, the quantity or material necessary to perform task will be minimized to the extent possible.*

3.6.2.2 Quality affecting items withdrawn from spares for use in the assigned plant system must retain the warehouse quality acceptance status tag up to the time the installation process begins (e.g., tags may be removed at time of staging materials for in-cell installation or when transferring to Operations controlled Radiation Buffer Areas for contamination).

3.6.2.3 Items withdrawn from spares for engineering evaluation that may be used in the assigned system as a Quality Level 1, 2, or 3 part must retain the warehouse tracking tag. Following engineering evaluation, if the part is not to be used immediately, it shall be returned to spares. Unused parts shall be returned to spares (after required reinspection). Should the warehouse tracking tag be lost and the responsible person cannot assure the chain of custody of the part, the part shall be considered, "for demonstration purposes only."

3.6.2.3.1 A part without a tag/label is automatically defined as demonstration only, and shall not be used in plant installation, unless documented quality acceptance status can be demonstrated.

3.6.2.4 Non-stock items ordered through a PO, inspected and received by the warehouse, are controlled by the warehouse to ensure the identity and quality level of the items is maintained.

3.6.2.5 Items shall be maintained in the original packaging, or appropriately tagged (example PO and line item), until coded to spares.

3.6.2.6 Items without proper identification shall be considered "for demonstration only." The end user shall make any arrangements for storage of items that require special storage conditions (temperature, humidity, etc.) prior to delivery.

3.6.2.7 Engineering evaluation instruments and tools (non-M&TE) are considered non-quality and are not required to be tracked per this procedure. (This only covers non-M&TE; M&TE is covered under the M&TE program.)

3.6.2.8 An annual assessment of material and equipment control shall be made by the area manager or designee to comply with this procedure. This assessment can take the form of an MAR.

3.7 Unsatisfactory Quality Level Material as Determined by End-User

3.7.1 If the end-user has determined that quality level material is unsatisfactory for use, the following shall be performed:

3.7.1.1 If unsatisfactory quality level material is determined to be of no further use, the material needs to be marked and/or segregated.

3.7.1.1.1 Radiological Control needs to be notified to determine if the unsatisfactory quality level material can be released, if required.

3.7.1.1.2 Waste Services needs to be notified to determine if the unsatisfactory quality level material is to be processed as waste, if required.

3.7.1.1.3 If unsatisfactory quality level material can be released by Radiological Control and is determined not to be a waste, the material is to be dispositioned in accordance with MP-PCMT-15.8, or considered demonstration only item.

3.7.1.1.4 If the unsatisfactory quality level material requires evaluation for repair, or if the end-user has identified a condition or conditions that require vendor/manufacturer, service, repair, or replacement, then action will be taken by coordinating with the SCI or Procurement.

3.7.1.1.5 The following is required if a nonconforming condition is identified:

3.7.1.1.5.1 The SCI or end user will need to initiate the appropriate documentation to report the discrepancy, and initiates an NCR in accordance with MP-Q&SI-5.4, Identification of Nonconforming Conditions, and the SCI will need to tag the item with an NCR tag.

3.8 Inventory, Tracking, and Shipping of AMWTP Respiratory Equipment

NOTE: *This section provides the requirements to inventory, track, and ship any respirators currently onsite, or for the purchase of any new respirators that will be used at AMWTP. The Respiratory Protection Program Administrator selects and procures the type of respiratory protection equipment used at AMWTP, as required by MP-ISIH-2.18.*

3.8.1 Respirator Tags

3.8.1.1 Warehouse personnel shall tag all respirators with a warehouse fabricated plastic/metal tag, which will indicate a unique identification number for that specific respirator and an AMWTP marking. A uniquely numbered tag will be attached to each respirator that is used or purchased for use at AMWTP.

3.8.1.2 The tags shall be completed by performing the following:

3.8.1.2.1 The unique identifying number (UIN) for the respirator must be documented on the tag.

3.8.2 Inventory Tags for Used Respirators

3.8.2.1 All respirators issued and used at AMWTP are done so in compliance with MP-ISIH-2.18.

NOTE: *The tag identifies the respirators inside the bag by their unique ID number being placed on the tag.*

3.8.2.1.1 Once the respirators are used, they are placed into a bag and a tag is attached to the bag by the respirator users.

3.8.3 Preparing Respirators for Shipment

3.8.3.1 Warehouse personnel shall collect used respirator bags from use areas and transport them to the shipping staging area.

3.8.3.2 The original copies of the respirator inventory tags will be removed from the pouch located on the respirator cart by the warehouse personnel and placed in a file folder for future review and reference.

3.8.4 Receiving Respirator Shipments

3.8.4.1 Warehouse personnel shall file paperwork for all respirator shipments.

3.8.4.2 Respirators shall be stored in accordance with MP-ISIH-2.18.

3.9 Spares/Consumables Withdrawal

3.9.1 Spares or consumables that are stored in the warehouse are withdrawn (issued) by initiating Form-1152, Stores Requisition.

3.9.2 The stores requisition will be entered into Maximo to keep the integrity of quantities and to generate the reorder of spares, ensuring inventory information is correct at all times.

3.9.3 Spares removed from inventory and not used will be returned to inventory in a timely fashion by initiating a stores requisition, completed and filled out in red, and Maximo will be updated accordingly.

3.9.4 HL/CMMS is responsible for staging and kitting of materials, issuance of materials, delivery of materials and kits to specified work locations in support of maintenance operations.

3.9.5 Disposal of property will be completed in accordance with procedure MP-PCMT-15.8.

3.10 Inventory Inspections

3.10.1 On a quarterly basis (or *cycle count* [see def.] basis), stored items will be inventoried to help ensure Maximo inventory accuracy. In addition, while conducting the inventory, Form-1669, Supply Chain Inventory Checklist, will be completed for each item identified as improperly stored, such as:

- Corrosive chemicals not segregated and near equipment and metal stock
- Flammables not properly stored
- Stainless steel components not protected from direct contact with other metals, particularly carbon steel
- Relief valves, motors, and other equipment not stored on bases

- Containers, boxes, and barrels stacked to unreasonable heights and not in accordance with vendor instructions
- Parts, materials, and equipment not repackaged or protective caps not reinstalled to seal items on which previous packaging or protective caps have deteriorated, been damaged, or lost while in storage
- Elastomers and polypropylene parts stored in areas exposed to light
- Machined surfaces not protected
- Equipment internals not protected from intrusion of foreign materials
- Proper rodent control not established to protect material and equipment.

3.10.1.1 Appropriate corrective action will be initiated and documented on Form-1669.

3.10.2 Discrepancies between physical inventories and stock records shall be reconciled and the supporting adjustments reviewed and approved by the Procurement Manager or designee.

3.10.2.1 A report of the physical inventory results, must be maintained, signed, and dated by the Procurement Manager or designee.

3.11 Equipment Held for Future Projects

3.11.1 A record of all *Equipment Held for Future Projects* (EHFFP; see def.) will be maintained, which shall include a listing of items with original date of classification as EHFFP; initial justifications for retaining EHFFP; rejustifications for retention; and documentation of reviews made by higher levels of management and Property Management.

3.11.1.1 The original decision to classify and retain equipment and EHFFP shall be justified in writing, providing sufficient detail to support the need for retention of the equipment.

3.11.1.1.1 The justification must cite the project for which retained, the potential use to be made of the equipment, or other reason for retention. (See Form-1677, Equipment Held for Current/Future Projects.)

3.11.1.2 The validity of the initial classification EHFFP shall be reviewed by management at a level above that of the individual making the initial determination.

3.11.1.3 Retention of equipment as EHFFP must be rejustified annually to ensure that original justifications remain valid. The rejustifications will contain sufficient detail to support retention. (See Form-1697, Rejustification for Equipment Held for Current/Future Projects.)

3.11.1.4 When equipment is retained as EHFFP for longer than 1 year, the annual rejustification shall be reviewed at a level of management at least two levels above that of the individual making the determination to retain the EHFFP.

3.11.1.5 Equipment retained as EHFFP for longer than 3 years should be approved by DOE.

3.12 Management and Control of Precious Metals

3.12.1 Inventory and control of precious metals shall be in accordance with DOE Order 580.1, Department of Energy Personal Property Management Program.

3.13 Return to Vendor and/or Shipment/Transfer of Government Property

3.13.1 The RCSS will be contacted prior to shipment of radioactive materials. Radioactive materials exceeding Type A quantities shall be shipped in accordance with MP-TRNS.20.2.

3.13.2 Shipment/transfer will be in accordance with established MP-PCMT-15.8, and requires completion of Form-1654, Request for Shipments/Transfer of Property, and Form-1675, Property Review Checklist-Tripwire.

3.13.3 Shipping documents (bill of lading, etc.) will be annotated to accurately identify government property being shipped, transferred, returned to vendor, etc.

3.13.4 Documentation supporting property returned to vendor for repair/rework will be maintained in a suspense file until property has been returned to AMWTP.

3.13.4.1 A review of the suspense file will be conducted by the Warehouse Supervisor on a quarterly basis.

4.0 DEFINITIONS

Bench stock. A stock of low-cost, fast-moving materials accumulated at point of use and consisting of consumption type supplies. Bench stocks are generally restricted to maintenance, repair, or fabrication type activities.

Cycle count. Periodic inventory system audit-practice in which different portions of an inventory are counted or physically checked on a continuous schedule. Each portion is counted at a definite, preset frequency to ensure counting of each item at least once in a year. Fast-moving or more expensive items are counted more often than slower moving or less expensive ones, and certain items are counted every day.

Demonstration only items. Items for demonstration purposes only are considered non-quality. When the demonstration only part is no longer needed it shall be disposed of in accordance with the Property Management procedure MP-PCMT-15.8. Untagged material is considered non-quality, demonstration only.

Equipment Held for Future Projects. Items or equipment being retained, based on approved justifications, for a known future use, or for a potential use in planned projects.

HotLine/Computerized Maintenance Management System. The material management staging/kitting and delivery agent responsible for staging and kitting of materials, delivery of materials and kits to specified work locations in support of maintenance operations.

Material. Property that may be incorporated into or attached to an equipment item or that may be consumed or expended in normal use. AMWTP has defined the following categories of material: (a) precious metals, (b) supplies, and (c) spare equipment.

Non-quality items. Items that are not classified as Quality Level 1, 2, or 3.

Onsite. Warehouse facilities within the gates of AMWTP, including Lindsay Warehouse.

Receiving Inspection Report. Document used to record the examination and evaluation of delivered items, and basis for acceptance, rejection, or finding of deficiency.

Supply Chain Inspector. The Materials Management Receiving agent responsible for conducting and documenting the appropriate examination or evaluation of delivered items and services for compliance to procurement documents, or basis for rejection.

System Engineer. The title for all engineers qualified under PLN-CD&M-001, System Engineer Program.

5.0 REFERENCES

(1) 10 CFR 71, Packaging and Transportation of Radioactive Material

(2) 10 CFR 835.405, Receipt of Packages Containing Radioactive Material

(3) DOE Order 580.1, Department of Energy Personal Property Management Program.

(4) INST-CMNT-10.5.1, Calibration and Control of Measuring and Test Equipment

(5) MP-COPS-9.6, Occurrence Reporting

(6) MP-DOCS-18.2, Records Management

(7) MP-ISIH-2.5, Hazard Communication Program

(8) MP-ISIH-2.18, Respiratory Protection Program

(9) MP-PCMT-15.1, Acquisition of Material and Services

(10) MP-PCMT-15.8, Property Management Program Procedure

(11) MP-Q&SI-5.4, Identification of Nonconforming Conditions

(12) MP-Q&SI-5.11, Suspect/Counterfeit Item Identification and Control

(13) MP-TRNS-20.2, Shipment and Receipt of Hazardous Materials

(14) PLN-CD&M-001, System Engineer Program

6.0 RECORDS

Records generated by this procedure are classified in accordance with the table below, and dispositioned in accordance with MP-DOCS-18.2, Records Management.

Record Description	Classification
MP-PCMT-15.21, Material Management, case file	Nonpermanent WIPP Records / ENV1-J-1 / Destroy 75 years after submittal or transfer to CBFO.
Form-1152, Stores Requisition	Dependent on type of materials received, one of the following applies: Misc. Other Records / A3-3-a-1-b / Submit to RMC after final payment. Destroy 3 years after final payment. OR Misc. Other Records / A18-35-b / Submit to RMC after final payment. Destroy upon permanent removal of item.
Form-1255, Receiving Inspection Report	
Form-1361, Property Removal Authorization	
Form-1366, New Chemical Request Form	
Form-1654, Request for Shipments/Transfer of Property	
Form-1669, Supply Chain Inventory Checklist	
Form-1675, Property Review Checklist-Tripwire	
Form-1677, Equipment Held for Current/Future Projects	
Form-1697, Rejustification for Equipment Held for Current/Future Projects	
Form-1852, Unsatisfactory, Over, Short, and Damaged (UOS&D) Material Report, Completed	
Form-1863, Warehouse Supporting Document File Check Sheet	
Form-1170, Receipt and Inspection Tag	Misc. Other Records /A23-1-a/ Destroy 2 years after no longer needed.
Form-1448, Notice to Code Spares	Facility Operating Records (FOR) / ENV2-a-1-a / Destroy 5 years after life of facility.

7.0 EXHIBITS

None

8.0 APPENDIXES

None

Production Planning

Advanced Mixed Waste Treatment Project

Approval:

(*Signature on file. See DCR-13369.*) 05/07/14

Date

REVISION LOG

Revision Number	Date Approved	Pages Affected	Description of Revision
0	08/13/07	All	DCR-6296. Initial issue. Incorporated CAR-28920 corrective action.
1	08/22/07	Various	DCR-6326. Update and clarify list of moves of non-WIPP payload drums.
2	01/10/08	Various	DCR-6661. Added Plant Manager and Operations Manager, MLLW Project Manager, and TCO/WCO to Section 2.0, new Section 3.6 to document process for selecting Facility boxes and MLLW project boxes.
3	03/11/08	7/8	DCR-6817. Made changes for new method of delivering certified containers for payload assembly.
4	05/22/08	Various	DCR-6996. Revised document to clarify process for the handling of WWIS certified containers (resolves CAR 39170).
5	06/12/08	Various	DCR-7195. Rewrote document to clarify process and resolve CAR 36224. Applied formatting and writing requirements per MP-DOCS-18.3 and MP-DOCS-18.4. Clarified roles and responsibilities; addressed daily electronic inventory analysis; clarified storage module and row management. Incorporated Ops Restructuring initiative (PSM/SS changes).
6	07/22/08	Section 3.2 (Note) Section 3.4.2	DCR-7341. Add bullet to Section 3.4.2; rewrite note to add “to put a container in a row” to support closure 39170 written for an uncertified container moved to a certified row.
7	09/10/08	Steps 2.0, 3.1.1.2.2, 3.4.3.6.1 3.4.4	DCR-7450. Added responsibility for resolving in transit container issues to the PSM in 2.0 and 3.1.1.2.2, added new Step 3.4.3.6.1 for historical data and new Step 3.4.4 to prepare and execute move sheets.
8	11/20/08	Step 3.4.1.1	DCR-7582. Added new Step 3.4.1.1 for the new Pad 2 Dense Pack Storage permit requirements.

Revision Number	Date Approved	Pages Affected	Description of Revision
9	12/04/08	Step 3.2.1.3	DCR-7804. Added Substep 3.2.1.3.1 ("Verify that postings are in place on a weekly basis") to close out CAR 40656.
10	02/17/09	Various	DCR-7892. Made changes to MLLW section to reflect corrective action per CAR 42153 when unauthorized box was moved into the MLLW area. Made recommended changes from MAR 42605 to evaluate the effectiveness of the document for move sheet development. Made minor editorial changes.
11	03/25/09	Various	DCR-8140. Modified note below Section 3.3 to provide clarification for NCR row positing. Added a new bullet to Step 3.4.2 for Pyrophoric containers.
12	4/17/09	Pg 6/3.2.4	DCR-8269. Minor change to add Note 3 above 3.2.4 to clarify that dual verification in this method is acceptable.
13	06/29/09	Various	DCR-8331. Incorporated corrective actions for CAR 43874, 44281 and provided additional clarification throughout.
14	12/21/09	Various	DCR-8697. Changes to clarify differences between designated certified container rows and certified container rows per AI 46096 and change to allow movement of SDOP boxes to and from WMF-634 without a move sheet.
15	02/01/10	Various	DCR-8993. Revised procedure to clarify process for production/deputy production managers to resolve in-staging containers (resolves CAR 48050).
16	06/14/10	Various	DCR-9272. Steps changed to address AK inspection when building move sheets.
17	10/11/10	Section 3.4	DCR-9427 – Added new step to incorporate checks needed to ensure a container meets the criteria for INST-FOI-26, applied DOCS-BLUESHEET-06.

Revision Number	Date Approved	Pages Affected	Description of Revision
18	01/20/11	Various	DCR-9679. Changes to implement CAR 48277 and AI-55274, to provide direction for accepting SDOP boxes to the facility, and to meet the intent of the procedure.
19	02/14/11	P 18/ Step 3.4.7.6.7	DCR-9889. Corrected cross reference step 3.4.6.6.10 to 3.4.7.6.10.
20	03/01/11	Section 3.8	DCR-9914. CAR-55086. Added new Section 3.8 to resolve issue with failure to maintain separation and segregation requirements while storing IDC RF-751 drums.
21	08/02/11	Various	DCR-10253. Revised to address pyrophoric rows and sludge SDOPs.
22	09/20/11	Various	DCR-10386. Added steps to prevent potentially pyrophoric drums from being vented in 615 DVF per AI 64822 and CAR 63176.
23	12/21/11	Various	DCR-10545. Revised to address changed LLW/MLLW process and to incorporate ITG-Bluesheet-212.
24	03/06/12	Various	DCR-10808. Changes incorporated to support SCR-4318. Added reference to new Form-2091, removed Form-2062. Made corrections to Records requirements.
25	04/09/12	Step 3.4.8.3.11	DCR-11073. Removed “assembled with characterized drums” from step. This check will be performed in TRUW-8.45.
26	11/28/12	Note 2 below Step 3.4	DCR-11603. Removed Note 2. Added new steps 3.4.8, 3.4.6.7, 3.4.6.8 and substep for preparing move sheets for delivery to CH2M-WG Idaho, LLC (CWI) or other site contractor. Also added Shipper to the Roles and Responsibilities section. Added section 3.8.
27	12/11/12	Various	DCR-11998. Changed titles of Forms-2091, 1862 from “Six Drum Overpack” to “Virtual Overpack” and SDOP to VOP and changes required to implement FMP-1263.

Revision Number	Date Approved	Pages Affected	Description of Revision
28	04/17/13	Various	DCR-12127. Added new facility box coordinator and Container Moves specialist. Incorporated dual verification information. Added required checks for boxes to support CWRs 7.2.1.12 and 7.2.3. Updated steps to coordinate with WTS field identification. Added new Form-2138.
29	05/17/13	Various	DCR-12395. Changes made to resolve Action Item 77249, to include Form-2138, and because Form-1829 is no longer valid for use in delivery to WMF-635 for direct load SWBs.
30	06/13/13	Step 3.5.2.1.1	DCR-12494. Replaced "the operators" with "personnel."
31	06/18/13	Various	DCR-12507. Changes incorporated as corrective action to CAR 78417.
32	07/18/13	Various	DCR-12607. Incorporated changes to clarify verbiage in making direct feed move sheets.
33	09/03/13	Various	DCR-12713. Changes made to be consistent with updated title for RPT-TRUW-83 and approved changes to the associated waste stream profile.
34	12/03/13	Various	DCR-12944. Removed Section 3.4.2 (SDCR 2394); moved NOTE about Non-RF751 to top of page with other notes; incorporated changes to resolve CAR 78280 to include note specifying IDCs; modified section 3.4.9 for Direct Feed for delivery to WMF-676 to support TFUP process.
35	12/17/13	Various	DCR-13016. Incorporated DSA requirements. Revised note and rolldown.
36	05/07/14	Various	DCR-13369. Deleted steps requiring box classification. Removed the requirement to segregate lined and unlined TRU direct feed.

TABLE OF CONTENTS

1.0 PURPOSE/SCOPE 1

2.0 ROLES AND RESPONSIBILITIES 1

3.0 PROCEDURE 4

3.1 Daily Electronic Inventory Analysis 4

3.2 Storage Row Management 6

3.3 NCR-Designated Row Posting 8

3.4 Move Sheet Development 9

3.5 Process for Move Sheet Development for Transfer of Containers to CWI or Other Site Contractor 21

3.6 Production Planning Prioritization 22

3.7 Move Sheet Execution 23

3.8 Process for Selecting Boxes and Drums as LLW/MLLW/Programs Feed 23

3.9 Process for Handling AK IDC Change Reports 24

4.0 DEFINITIONS 27

5.0 REFERENCES 27

6.0 RECORDS 29

7.0 EXHIBITS 29

8.0 APPENDICES 29

Appendix A – AMWTP AK IDC Change Process Flow A1

AMWTP MANAGEMENT PROCEDURE		
MP-PRPL-22.1, Rev. 36	Issued: 05/07/14	Effective: 05/08/14
Production Planning		

1.0 PURPOSE/SCOPE

This procedure provides direction of the overall process by which the Advanced Mixed Waste Treatment Project (AMWTP) will develop move sheets that direct the movement and storage of waste containers outside WMF-676, the Advanced Mixed Waste Treatment Facility (AMWTF), including waste movements to and from the AMWTF. This process ensures that move sheets are consistently developed to a prescribed standard for movement and staging for containers to payload assembly for Waste Isolation Pilot Plant (WIPP) TRUPACT loading, WMF-635 Drum Repackaging Facility, and the Low-Level Waste (LLW)/Mixed Low-Level Waste (MLLW) Programs. The operational instructions for physical movement, handling, and storage of these waste containers are specified in INST-OI-11, Waste Container Handling.

This procedure also provides direction for performing daily and weekly inventory analysis to ensure containers are adequately tracked through AMWTP processes.

2.0 ROLES AND RESPONSIBILITIES

Performer	Responsibilities
LLW/MLLW Programs Manager	• Evaluates "C" box list and drum population for possible MLLW candidate • Notifies Container Moves lead of containers identified for delivery to the LLW/MLLW new inventory staging area • Notifies Container Moves lead of containers identified as rejected from the LLW/MLLW new inventory staging area • Interfaces with the Integrated Production Planning manager and the TRU Programs manager, as necessary, to accomplish project objectives.
Operations Technician (OT)	• Moves waste in accordance with INST-OI-11 for containers outside the AMWTF and the move sheet(s) provided by container moves personnel • Accurately records waste movement in the Waste Tracking System (WTS).
Plant Shift Manager (PSM)	• Oversees the processing of the daily priority moves • Resolves in-transit container issues.
Task List Controller	• Updates WTS task list.

Performer	Responsibilities
Container Moves Shift Lead	• Develops waste container move sheets per standards established within this procedure • Ensures "daily priority moves" are issued, which align with daily movement priorities • Ensures daily electronic inventory analysis is completed • Obtains secondary independent verification • Coordinates the movement of containers at AMWTP • Processes acceptable knowledge (AK) item description code (IDC) change records, as applicable (see Appendix A, AMWTP AK IDC Change Process Flow).
Facility Box Coordinator	• Reviews boxes for acceptance into the AMWTF • Coordinates the facility shift supervisor (SS) review of boxes for process ability in the Treatment Facility boxlines • Interfaces with facility management to determine requested feed ratio in relation to current plant condition if possible.
Container Moves Lead	• Reviews and releases delivery requests for the LLW/MLLW Programs and AMWTF direct feed.
Container Moves Specialist	• Develops waste container move sheets per standards established within this procedure • Coordinates the movement of containers at AMWTP • Obtains secondary independent verification • Assumes Container Moves lead duties, if required.
Appropriate Operations Manager	• Provides input to the Container Moves lead for daily movement priorities • Resolves in-staging container issues • Attends resource meeting.

Performer	Responsibilities
Shift Supervisor	• Notifies the transportation certification official (TCO) or waste certification official (WCO) if, during preparations for assembly of a payload, one or more containers are not available or are rejected • Verifies container moves have been completed as specified by the move sheets.
TRU Programs Manager	• Evaluates "C" box list and drum population for possible MLLW candidate • Interfaces with the Container Moves lead and the LLW/MLLW Programs manager, as necessary, to accomplish project objectives.
Site Project Manager Designee (SPMD)	• Assigns containers to be assembled into direct load standard waste box (SWB) or *virtual overpack* (VOP; see def.) • Notifies the Container Moves shift lead or designee of containers assigned • Supplies a list of containers approved for compaction to the Container Moves lead or designee • Performs second review for direct feed containers and documents on Form-2017, Production Planning Checks for Direct Feed Drums to WMF-676.
Transportation Certification Official/Waste Certification Official	• Identifies waste containers for WIPP payload assemblies • Provides applicable documentation to Production Planning for containers to be built into payloads.
Shipper	• Coordinates with Container Moves lead to select containers for CH2M-WG Idaho, LLC (CWI) shipment based on location • Provides Idaho National Laboratory Integrated Waste Tracking System (IWTS) approved load list via e-mail to the Container Moves shift lead.
Production Planning	• Includes appropriate information for move sheets • Ensures WTS Task List has been updated appropriately.

3.0 PROCEDURE

NOTE 1: *Container Moves shift lead or designee is responsible for all steps in this procedure unless otherwise noted.*

NOTE 2: *These steps may be performed in any order.*

3.1 Daily Electronic Inventory Analysis

NOTE: *Daily electronic inventory analysis may be performed more often, as necessary, to ensure that all containers delivered to WMF-635 for payload assembly have been evaluated by the daily electronic inventory analysis.*

3.1.1 Ensure that an electronic inventory analysis is performed daily.

3.1.1.1 Certified Rows

3.1.1.1.1 Verify that only certified containers with no open nonconformance reports (NCRs) are in the designated certified container rows.

3.1.1.1.2 Verify that only certified containers with no open NCRs are in the payload certified container rows in WMF-635.

NOTE: *The Morning Certification Report may be an e-mail documenting the validation of certified containers in certified container rows.*

3.1.1.1.3 Forward the Morning Certification Report to the PSM and any other personnel requesting this information.

3.1.1.1.4 If non-certified containers or containers with an open NCR have been found in a certified container row, perform the following:

3.1.1.1.4.1 Issue move sheet to have the non-certified or NCR'd containers removed.

3.1.1.1.4.2 Notify the PSM and SS to determine any corrective actions to be taken.

3.1.1.2 In-Transit or In-Staging Containers

NOTE 1: *Any container that remains in-transit or in-staging on the electronic inventory analysis list for more than 1 day is considered deficient.*

NOTE 2: *In general, WTS staging areas will be used for temporary movement and not for long term container storage.*

3.1.1.2.1 Review the in-transit and in-staging containers to determine how long each container has been in transit or in staging.

NOTE: *It is allowable for containers to be held in-transit longer than 1 day if the delay is justifiable (e.g., due to equipment malfunction that impacts the loading of vehicles).*

3.1.1.2.2 If in-transit container(s) has remained on the list longer than 1 day, with no justifiable delay, forward the container list to the on-duty PSM for resolution.

3.1.1.2.3 PSM: Ensure in-transit containers with no justifiable delay are resolved.

3.1.1.2.4 If in-staging container(s) has remained on the list longer than 1 day, with no justifiable delay, forward the container list to the appropriate operations manager for resolution.

3.1.1.2.5 Appropriate Operations Manager: Ensure in-staging containers are resolved.

3.1.1.3 Pyrophoric Containers

3.1.1.3.1 Include a list of rows that contain pyrophoric containers as part of the daily electronic inventory analysis.

3.1.1.4 High-Hydrogen Drums

3.1.1.4.1 Include a list of high-hydrogen drums with container locations as part of the daily electronic inventory analysis.

3.1.2 Develop move sheets per Section 3.4 to control the movement of waste throughout AMWTP using Form-1829, Production Planning Non-Facility Move Sheet; Form-1830, Production Planning Checks for Boxes to WMF-676; Form-2017; or Form-2138, Production Planning Non-Facility Move Sheet for Verification Moves.

3.2 Storage Row Management

NOTE: *Waste Tracking System is designed to electronically perform special row entry checks prior to allowing an OT to put a container in a row.*

3.2.1 Take the following, at a minimum, into consideration for all move sheets in all storage modules and WMF-636, and implement as necessary:

3.2.1.1 Ensure that all changes made to move sheets Form-1829, Form-1830, Form-2017, or Form-2138 comply with change requirements in MP-DOCS-18.2, Records Management.

3.2.1.2 Store MLLW and transuranic (TRU) mixed waste in an approved Resource Conservation and Recovery Act (RCRA) storage area.

(HWMA/RCRA TSA IS Document; HWMA/RCRA Permit)

3.2.1.3 Store LLW in an approved RCRA storage area or in a non-RCRA area that is clearly marked and posted.

3.2.1.4 Identify and post the purpose of waste container storage areas, as appropriate (for example, high-hydrogen drums, special-case waste [SCW], liquid absorption candidates, containers waiting drum age criteria [DAC], and containers that have an NCR).

3.2.1.4.1 Verify on a weekly basis that postings are in place.

3.2.1.5 Store waste characterized by Centralized Characterization Project (CCP) processes separate (minimum 3-ft separation) from offsite waste, newly generated waste, and waste characterized by AMWTP processes.

(HWMA/RCRA Permit)

3.2.1.6 Store waste received from offsite generators (non-AMWTP waste) separate (minimum 3-ft separation) from legacy and newly generated waste characterized by AMWTP processes.

3.2.1.6.1 Store offsite waste from different generators separately, as well.

(HWMA/RCRA Permit)

3.2.1.7 Apply WTS entry rules to control container access, where appropriate (examples include stacked overmass box storage area [SOBSA], planar overmass storage area [POSA], Transuranic Storage Area-Retrieval Enclosure [TSA-RE], and certified container rows).

(EDF-0034, 7.3.7, 7.3.9, 7.3.10, 7.3.12)

NOTE 1: *A designated certified container row can be used for certified containers only when it is identified in WTS and the WTS-certified container electronic entry rules are applied.*

NOTE 2: *Designated certified container rows can be removed from the WTS controls and become normal waste storage rows, as needed.*

NOTE 3: *Certified container rows in WMF-635 do not require the WTS entry rules to be applied.*

3.2.2 Identify designated certified container rows in WTS.

3.2.3 Verify entire area of all designated certified rows are posted on a weekly basis.

NOTE 1: *For permitted storage on Pad 2 of WMF-636, process knowledge, visual examination (VE), or second real-time radiography (RTR) verification is used to determine the presence/absence of liquids. Process knowledge can only be used for supercompacted waste, newly generated AMWTP waste, and non-AMWTP newly generated waste.*

NOTE 2: *Real-time radiography may be used to remotely examine any of the waste managed at the AMWTP to determine the absence/presence of liquids. If RTR is used, a second verification is to be performed as described in INST-TRUW-8.13.1, TRU Programs Site Project Office Process.*

NOTE 3: *Second verification for LLW/MLLW can be performed using Form-1932, HWMA/RCRA Permit Review Second Verification.*

3.2.4 Confirm (for those containers being moved to WMF-636 dense-pack-permitted storage with RTR) that the second verification has been performed and results have been recorded in WTS or on Form-1932, in accordance with INST-TRUW-8.13.1.

(HWMA/RCRA Permit)

3.3 NCR-Designated Row Posting

3.3.1 Post all storage rows, or specific pallet(s) within a row, containing nonconforming containers as indicated by open *TrackWise* (see def.) NCRs, CCP tags, or CCP vendor project manager hold tags using solid stanchions located in front of the row designating the row as an NCR row.

NOTE 1: *Waste containers with nonconforming characterization or certification data impacting acceptability for shipment or disposal require physical segregation in addition to administrative controls.*

NOTE 2: *Nonconformance tags are placed on individual nonconforming waste containers at the time of NCR generation or during the initial waste container movement following the generation of an NCR.*

3.3.2 OT: Tag individual nonconforming waste containers that do not have a red QA NCR HOLD tag as they are moved, in accordance with INST-OI-11 and MP-Q&SI-5.4, Identification of Nonconforming Conditions.

(DOE/CBFO-94-1012)

3.4 Move Sheet Development

NOTE 1: *A graded approach is used by applying more stringent controls on the generation of move sheets based on the complexity of the move and the consequences of moving a container to the wrong location.*

NOTE 2: *Information may be found on the site project manager log, WTS entry into the RTR, VE, or AMWTP container screen, or on Form-1664, Mixed Low-Level Waste Container Inventory Sheet.*

3.4.1 Generate move sheets for containers outside AMWTF using Form-1829 or Form-2138 to ensure storage and movement complies with INST-OI-11.

3.4.1.1 Generate Form-2138 for moves to the following areas:

- WMF-628 Drum Treatment Facility (DTF)
- WMF-635 Drum Reoverpack Facility (DRF)
- WMF-634 Drum Coring Sample Recovery System (DCSRS) Glovebox
- Sludge Repackaging Project.

3.4.1.2 Sign the move sheet in the appropriate location.

3.4.2 Production Planning: In order to prevent potentially pyrophoric drums from being vented in WMF-615-Drum Vent Facility (DVF) OR WMF-634 Drum Vent System (DVS), verify drum(s) are not identified as Potential Roaster Oxide in WTS before disposition to venting facilities on move sheet.

3.4.2.1 Include drum IDC on move sheets delivering containers to WMF-615 DVF or WMF-634 DVS.

3.4.2.2 If drum(s) identified as Potential Roaster Oxide in WTS are being sent to WMF-634 for characterization, ensure that the WTS Task List has been updated to "Vent Not Required."

3.4.2.2.1 Include note on move sheet specifying potential roaster containers.

NOTE: *Non RF-751 drums with an RTR QC complete status are allowed to be vented and can be included on a move sheet for 615-DVF feed or 634-DVS feed after the task list has been updated to "Drum Vent Required."*

3.4.3 Generate move sheets for containers to AMWTF using Form-1830 for boxes and Form-2017 for drums to ensure storage and movement complies with LST-EC&P-11, AMWTP HWMA/RCRA Permit WMF-676 Waste Management Criteria, and INST-FOI-26, AMWTF Receipt, Storage, and Container Management.

(RPT-NFCS-07, CWR 17, 18, 19, 20; HWMA/RCRA Permit)

NOTE: *Move sheets may be as simple as identifying the building and row to move containers from and the building where the containers are to be delivered or as complex as identifying each individual container, its current location in X-Y-Z coordinates, and the building and row where it is to be delivered.*

3.4.4 Segregate high-hydrogen drums when identified by CCP Flam Gas Sampling or AMWTP Headspace Gas Sampling (HGAS).

3.4.5 When generating a move sheet, consider the following data:

- Task list updated
- AK inspection status
- Vent date
- RTR status
- Assay status
- Expert Technical Review status
- Classification of boxes
- Container type
- IDC, historical IDC, or other IDC
- Liquid amount and location
- Disposition of waste (Facility Accept, MLLW, SCW, etc.)

- HGAS status
- Fissile gram equivalent (FGE) value
- Open NCRs and their dispositions
- Other containers that will be moved to retrieve the target container
- MLLW or LLW, see NOTE 1 of Step 3.4.6
- DAC
- Special-case items
- Certification status
- Containers being moved are compliant with WTS entry rules for destination rows
- Incompatible wastes are properly segregated
- Stacking criteria
- Impact and accessibility of waste for container movement crews
- Pyrophoric containers are properly stored and segregated.

3.4.5.1 Ensure appropriate details are included on Form-1829, Form-1830, Form-2017, or Form-2138 for movements with special handling requirements (e.g., leaking container, repaired container, AK inspection).

NOTE 1: *LLW IDCs BN619, BN624, BN625, BN531, BN631, BN636, BN637 are to be segregated from TRU and MLLW IDCs in storage.*

NOTE 2: *Two types of posted certified rows are used for the move sheet process:*

- *Certified rows which will only contain Waste Data System (WDS/WWIS)-certified containers and have WTS entry rules applied.*
- *Certified payload rows which will only contain WDS/WWIS-certified containers in WDS/WWIS-approved payloads located in WMF-635.*

3.4.6 Prepare move sheets (Form-1829) for pulling waste containers to build payloads.

3.4.6.1 For containers received from offsite that do not have WDS/WWIS status displayed in WTS, obtain appropriate WDS/WWIS data from the TCO/WCO, and proceed to Step 3.4.6.6.

3.4.6.2 Identify certified containers, or containers already assigned to payload (per Step 3.4.6.5), and prepare a move sheet (Form-1829) to fill designated certified rows with certified containers.

3.4.6.3 Notify TCOs or WCOs of certified containers in designated certified container rows to be assigned to payloads.

3.4.6.3.1 For containers already assigned to payloads, proceed to Step 3.4.6.6.

3.4.6.4 TCO or WCO: Assign containers to be assembled into payloads from the certified row.

3.4.6.5 Query WDS/WWIS for a listing of payloads by payload number and container numbers designated for the payload and e-mail the payload notification listing to Production Planning.

3.4.6.6 Electronically copy and paste the electronic payload notification information to generate a move sheet to move payload containers to certified payload container row(s).

3.4.6.6.1 For containers certified according to the Historical ID, include a column for Historical ID so that verification can be made to confirm the containers on the move sheet match the payload notification.

3.4.6.6.2 For WIPP shipments, include a column for WTS WDS/WWIS status to clearly indicate the drums are certified.

3.4.6.7 OT: Move payload containers per INST-OI-11 from the locations designated on the move sheet (Form-1829) to the payload certified container row(s) to be assembled into payloads.

3.4.6.8 If, during preparations for the assembly of a payload, one or more containers are not available or are rejected by the payload assembly crew, notify the TCO or WCO and return the incomplete payload documentation to TCO or WCO.

3.4.6.8.1 TCO or WCO: Start over at Step 3.4.6.1 to complete the process.

3.4.7 Prepare move sheets (Form-1829) for pulling and staging waste containers to build VOP or direct-load SWB.

3.4.7.1 SPMD: Assign containers to be assembled into direct-load SWB or VOP.

3.4.7.2 SPMD: Notify the Container Moves shift lead or designee of containers assigned to direct-load SWB or VOP electronically in a Microsoft Excel format and provide a PDF of **ONE** of the following forms, as appropriate:

A. Form-1775, Virtual SWB Form

B. Form-1862, Characterized Debris Virtual Overpack Assembly Form

C. Form-2091, Uncharacterized Debris Virtual Overpack Assembly Form.

3.4.7.3 Electronically copy and paste the electronic payload notification information to generate a move sheet to move VOP or direct-load SWB containers to appropriate row(s) for staging builds.

3.4.7.4 Obtain an independent verification comparing Form-1775 to Form-2138 for direct-load SWBs, and Forms-1862 or -2091 to Form-1829 for VOP to ensure the correct containers have been identified for staging of direct-load SWB or VOP.

(1291-2006-025, CWR 6)

3.4.7.5 OT: Move containers per INST-OI-11 from the locations designated on the move sheet (Form-1829) to the build staging row(s) to be assembled into direct-load SWB or VOP.

3.4.7.6 If during preparations for assembly of direct-load SWB or VOP, one or more containers are not available or are rejected by the assembly crew, notify the SPMD.

3.4.7.6.1 SPMD: Start over at Step 3.4.7.1 to complete the process.

3.4.8 Prepare boxes for delivery to WMF-676 Treatment Facility.

3.4.8.1 Prepare move sheet (Form-1829) to move boxes to and from WMF-634 characterization processes.

3.4.8.2 Review all applicable containers for facility acceptability, per INST-FOI-26, LST-EC&P-11, and Form-1830.

3.4.8.2.1 Ensure an RTR recording review has been completed and accepted by a facility SS or designee.

(1291-2011-020, CWR 1; 1291-2012-027, CWR 1)

3.4.8.2.2 Ensure there are no open NCRs associated with the container being evaluated.

3.4.8.2.3 Verify FGE limit is <325 for debris.

(RPT-NFCS-07, CWR 18; 1291-2012-027, CWR 1)

3.4.8.2.4 Ensure the assay is complete and the "Expert Review Outcome" is "Accept," "Acceptable," or "Modify."

3.4.8.2.5 Ensure disposition field is "Facility Accept" in the WTS task list.

3.4.8.2.6 Ensure process code is "BP" or "SC" in the WTS task list.

3.4.8.2.7 Ensure RTR status is "Complete" and task disposition is "Facility Accept" in the WTS task list.

(1291-2011-020, CWR 1; 1291-2012-027, CWR 1)

3.4.8.2.8 Ensure that the AK_EVAL task is listed and identified as "Complete" in the WTS task list (not required for VOPs).

3.4.8.2.9 Ensure assay status is "Complete" and task disposition is "Facility Accept" in the WTS task list.

(RPT-NFCS-07, CWR 17)

3.4.8.2.10 Verify the IDC is listed in RPT-TRUW-83, Acceptable Knowledge Summary for Supercompacted Debris Waste (not required for VOPs).

3.4.8.2.11 Verify the "Explosives" question is answered as NO on the "Contents-Container" tab in the WTS RTR screen (not required for VOPs assembled with characterized drums).

3.4.8.2.12 If the "PCB Present" tab in the "Contents-Container" tab is checked, review the polychlorinated biphenyl (PCB) contents.

3.4.8.2.12.1 If PCB items are present other than light ballasts, verify the AMWTF appropriate operations manager has approved the box (not required for VOPs assembled with characterized drums).

3.4.8.2.13 Verify the "Non-Radionuclide Pyrophoric Materials Present" question is answered as NO on the "Contents-Container" tab in the WTS RTR screen (not required for VOPs assembled with characterized drums).

3.4.8.2.14 Verify the "Waste Exhibiting the Characteristics of Ignitability, Corrosivity, or Reactivity Present" question is answered as NO on the "Contents-Container" tab in the WTS RTR screen (not required for VOPs assembled with characterized drums).

3.4.8.2.15 Verify the "Surface Dose Total" is populated in the Inspection Station of the "Radiological Safety Readings" screen.

3.4.8.2.15.1 If the "Surface Dose Total" is >200 mR/hr, verify that the "RH_Eval" task in the WTS task list is "Complete" and that a Facility Modification Proposal has been approved.

3.4.8.2.16 Complete "Incompatible IDC" section on Form-1830.

3.4.8.3 Check FTS status.

3.4.8.3.1 Verify the FTS calibration status is "GO" for the box.

3.4.8.3.2 Verify the FTS FGE limit status is "GO" for the box.

3.4.8.3.3 Verify that the FGE values in WTS and FTS are no greater than 0.01 difference for the container being checked.

3.4.8.4 If any criteria in Steps 3.4.8.2 and 3.4.8.3 are not met, do not issue Form-1830.

3.4.8.5 Submit Form-1830 and its attachments to the facility SS for approval.

3.4.9 Prepare direct feed drums for delivery to WMF-676 Treatment Facility.

3.4.9.1 SPMD: Supply a list of containers approved for compaction to the Container Moves lead or designee on a Microsoft Excel worksheet.

3.4.9.2 Check Fissile Tracking System (FTS) status.

3.4.9.2.1 Verify the FTS Calibration Status is "GO" for each drum.

3.4.9.2.2 Verify the FTS FGE Limit Status is "GO" for each drum.

3.4.9.2.3 Verify that the FGE values in WTS and FTS are no greater than 0.01 difference for the container being checked.

NOTE 1: *If the FTS Expert Review Status is NO-GO, the facility SS may change the status to GO in accordance with INST-FOI-27, FTS Operations.*

NOTE 2: *Direct feed may be TRU or MLLW.*

3.4.9.3 Prepare Form-1829 for accessing approved direct feed and staging them for facility feed.

3.4.9.4 Prepare Form-2017 for delivery of staged direct feed containers to WMF-676 Treatment Facility using the most accessible population of drums.

NOTE: *Personnel should never record information for 55-gal drums and overpack (83-/85-gal) drums on the same Form-2017.*

3.4.9.4.1 Identify container type as overpack (83-/85-gal) drums or 55-gal drums on Form-2017.

3.4.9.4.2 Identify the load as TRU or MLLW direct feed on Form-2017.

3.4.9.4.3 Sort containers for direct feed by weight.

3.4.9.4.4 Select the heaviest and lightest available drums and assign first two trailer locations on Form-2017.

3.4.9.4.5 Select the second heaviest and second lightest available drums and assign the second two trailer locations on Form-2017.

3.4.9.4.6 Continue selecting drums alternating heaviest and lightest, until all drums have been selected and assigned locations recorded on Form-2017.

3.4.9.4.7 Verify the FGE of each drum is ≤200 FGE and complete FGE section on Form-2017.

(RPT-NFCS-07, CWR 18)

3.4.9.4.8 Verify the IDC of each drum is listed in RPT-TRUW-83 OR are MLLW direct feed drums with IDCs BL-010 and BL-020.

3.4.9.4.9 Complete “Incompatible IDC” section on Form-2017.

NOTE 1: *The following section may be performed by Container Moves lead or designee OR SPM lead or designee.*

NOTE 2: *If an SPMD performs this section, it cannot be the same person who performed the original review and approval.*

NOTE 3: *Additional information may also be found in closed NCRs*.

3.4.9.4.10 Verify that none of the following supercompactor (S/C)-prohibited items are identified for all direct feed candidate containers using WTS for TRU, and WTS and Form-2084 (electronic or manual) for MLLW containers:

- Solid structural components below the bottom chine that inhibit supercompaction, and the drum contains internal containers with observable liquid in excess of 60 mL or 3% by volume, whichever is greater
- Free liquids ≥5% (>22 pt.) of the container volume

(1291-2013-011, CWR 1)

- Liquid mercury
- Lead acid or wet cell batteries
- Explosives
- Non-aerosol potentially-pressurized containers
- Light ballasts, transformers, or other PCB-related items
- Impenetrable shielded container or impenetrable objects within the container.

3.4.9.4.10.1 For MLLW, verify that none of the following items are identified using Form-2084 (or electronic equivalent).

- Pyrophoric material
- Etiologic agents
- Sealed radioactive sources
- >1% chelating agents.

NOTE: *The conversion to be used between milliliters and pints is 49 mL equates to 0.10 pints.*

3.4.9.4.11 For drums containing aerosol cans, reject the drum from direct feed if any of the following conditions exist:

A. The combined liquid volume of unvented aerosol cans within a drum exceed 49 mL

B. Solid structural components are below the bottom chine.

3.4.9.4.12 Document results of S/C prohibited items on Form-2017.

3.4.9.4.12.1 If any container contains an S/C prohibited item, delete container from Form-2017 and notify SPM or designee.

3.4.9.4.13 Submit Form-2017 and its attachments to the facility SS for approval.

3.5 Process for Move Sheet Development for Transfer of Containers to CWI or Other Site Contractor

3.5.1 Prepare and ensure the execution of move sheets (Form-1829) for staging containers for delivery to CWI or other site contractor.

NOTE: *Containers may be transferred to CWI or other site contractor for the following reasons:*

- *Sludge Repackaging Project (SRP)*
- *Accelerated Retrieval Project return*
- *Remote handled or source container treatment by CWI*
- *Other container transfer to CWI or other site contractor identified in an approved interface agreement.*

3.5.1.1 Coordinate container locations with shipper to ensure containers for shipment are reasonably accessible.

3.5.1.2 Shipper: Send IWTS approved load list via e-mail to the container moves shift lead.

3.5.1.3 For containers being sent to SRP, verify that all containers on the IWTS approved load list have an FGE limit ≤200 FGE.

(EDF-0822, CWR 3)

3.5.1.4 If during preparations for the shipment, one or more containers are not available or are rejected, notify the shipper and return the move sheet to the Container Moves shift lead or designee.

3.5.1.4.1 Shipper: Start over at Step 3.5.1 to complete the process.

3.5.2 Prepare move sheets (Form-1829 or Form-2138) for transferring containers to CWI or other site contractor.

3.5.2.1 For containers being sent to SRP, create move sheet Form-2138 to load shipment using the IWTS approved load list.

3.5.2.1.1 Include one column on the Form-2138 supplemental Excel spreadsheet for personnel to initial who are performing the AMWTP barcode verification.

3.5.2.2 For containers being sent to non-SRP offsite locations, create move sheet Form-1829 to load shipment using the IWTS approved load list.

3.6 Production Planning Prioritization

NOTE: *Container moves for safety or for compliance receive top priority.*

3.6.1 Prepare daily movement priorities and issue for use in daily resources meeting.

3.6.2 Generate a "Daily Priority Moves" listing, in order of priority for the move sheets to be worked for the day, which aligns with the daily movement priorities.

3.6.2.1 When setting priorities, consider, but do not limit to, the following:

3.6.2.1.1 Ensure the AMWTF characterization processes, treatment processes, and payload assembly and shipping have containers to keep critical path processes actively employed.

3.6.2.1.2 Ensure waste containers are dispositioned out of areas that are not long-term storage areas.

3.6.2.2 Balance priority waste container moves to meet AMWTP's mission and production goals.

3.6.2.3 If priorities change during the day, generate and reissue a revised "Daily Priority Moves."

3.7 Move Sheet Execution

3.7.1 SS: Assign OTs to perform waste container moves in accordance with the "Daily Priority Moves," INST-OI-11 for containers outside AMWTF, and the provided move sheet(s).

3.7.2 Performing SS: Ensure that the specified moves have been completed in accordance with INST-OI-11.

3.7.2.1 Ensure that Forms-1829 and -1830 or Form-2017 have been signed where required.

3.7.2.2 Return the forms to Production Planning.

3.7.3 Update the move sheet check-out log with current move sheet status.

3.8 Process for Selecting Boxes and Drums as LLW/MLLW/Programs Feed

NOTE 1: *This section does not provide direction for delivery of containers to the facility.*

NOTE 2: *Any boxes that have been* classified as "C" *(see def. C-classification) are not processed in the AMWTF unless agreed to by the LLW/MLLW Programs manager.*

3.8.1 Offsite LLW/MLLW Programs Manager, TRU Programs Manager, Container Moves Lead, or Designees: Review identified LLW/MLLW containers in WTS and select LLW/MLLW candidate containers for processing.

3.8.2 Container Moves Lead or Designee: Prepare move sheets, as necessary, to route containers through characterization (RTR, assay, and/or other characterization, as necessary).

NOTE: *After characterization activities are complete on the candidate containers, the containers are processed through the LLW/MLLW verification process per MP-LLW-19.7, Low-Level Waste/Mixed Low-Level Waste Verification, and LLW/MLLW TSDF disposition process per MP-LLW-19.4, Low Level Waste/Mixed Low Level Waste TSDF Disposition, to develop the IWTS container disposition process queues.*

3.8.3 Container Moves Lead or Designee: Initiate the process to retrieve containers identified on the IWTS container disposition process queues from AMWTP storage.

3.8.4 Container Moves Shift Lead or Designee: Create a move sheet to deliver containers identified on the IWTS container disposition queues to LLW/MLLW new inventory staging area.

3.8.4.1 Ensure that move sheet generated indicates correct liquid status for containers to be staged in the LLW/MLLW new inventory staging area.

3.8.5 Deliver containers to the LLW/MLLW new inventory staging area per INST-OI-11.

3.8.6 SS: Notify Container Moves lead of containers delivered in error to the LLW/MLLW new inventory staging area or rejected containers.

3.8.7 Container Moves Lead: For containers identified by the SS as returns or rejects, initiate a move sheet to have those rejected containers removed from the LLW/MLLW new inventory staging area per INST-OI-11.

3.9 Process for Handling AK IDC Change Reports

NOTE: *Acceptable Knowledge Expert (AKE) personnel will initiate AK IDC Change (AIC) records in TrackWise in accordance with INST-TRUW-8.13.3, TRU Program Acceptable Knowledge Process. Once e-signature is complete, TrackWise will automatically send an e-mail notification to Production Planning personnel.*

3.9.1 Container Moves Shift Lead or Designee: Review and complete TrackWise AIC records for all notifications received.

3.9.1.1 Verify that the AIC record is not at "Initiate."

3.9.1.1.1 If the record is at initiate, notify AKE to e-sign the record.

3.9.2 Confirm that the container is in compliant storage using the WTS incompatible report.

3.9.2.1 If the container is in compliant storage, select "Yes" in the Compatible Container Storage field.

3.9.2.1.1 Verify that the Container Review Results is populated with "No Action Required."

3.9.2.1.2 Enter an appropriate comment in the Container Review Comments field.

3.9.2.1.3 In the Activity Type dropdown, select "Compatible Storage."

3.9.2.1.4 Enter an appropriate comment in the Activity Summary field.

NOTE: *Once e-signature is complete for "Compatible Storage," TrackWise will automatically send an e-mail notification to Production Planning personnel and the AKE originator.*

3.9.2.1.5 Save and e-sign record.

3.9.2.1.6 Ensure that the record state is "Closed-Done."

3.9.2.2 If the container is not in compliant storage, select "No" in the Compatible Storage field.

3.9.2.2.1 Verify that the Container Review Results field is populated with "Initiate Move sheet."

3.9.2.2.2 Enter move sheet number in the Container Storage Confirmation field.

3.9.2.2.3 In the "Activity Type" dropdown, select "Non-Compatible Storage."

3.9.2.2.4 Enter appropriate comment in the Activity Summary field.

NOTE: *Once e-signature is complete for "Non-Compatible Storage," TrackWise will automatically send an e-mail notification to Production Planning personnel, PSMs, plant manager, Environmental personnel, and the AKE originator.*

3.9.2.2.5 Save and e-sign.

3.9.2.2.6 When the container has been moved to compliant storage, open the AMWTP AIC record in TrackWise.

3.9.2.2.6.1 In the Activity Type field, select "Container Move Complete."

3.9.2.2.6.2 Enter appropriate comment in the Activity Summary field.

3.9.2.2.6.3 Enter appropriate comment in the Container Review Comment field.

3.9.2.2.6.4 Save and e-sign record.

3.9.3 Container Moves Shift Lead: Confirm the container is in compliant storage using the WTS incompatible report.

3.9.3.1 If the container is in compliant storage, from the "Activity Type" dropdown, select "Compatible Storage."

3.9.3.2 Enter appropriate comment in the Container Storage Confirmation and Activity Summary fields.

NOTE: *Once e-signature is complete for "Compatible Storage," TrackWise will automatically send an e-mail notification to Production Planning personnel, PSMs, plant manager, Environmental personnel, and the AKE originator.*

3.9.3.3 Save and e-sign record.

3.9.3.4 Ensure the record state is "Closed-Done."

3.9.3.5 If the container is not in compliant storage, from the "Activity Type" dropdown, select "Non-Compatible Storage."

3.9.3.6 Enter appropriate comment, including new move sheet number, in the Activity Summary and Container Storage Confirmation fields.

NOTE: *Once e-signature is complete for "Non-Compatible Storage," TrackWise will automatically send an e-mail notification to Container Moves group, PSMs, plant manager, Environmental personnel, and the AKE originator.*

3.9.3.7 Save and e-sign record.

4.0 DEFINITIONS

TrackWise. Issues management database, provides the capability to create different documents requiring unique information fields and different notifications for approval or action and creates unique tracking/trending records. Typical document types are as follows:

A. Quality Assurance Program Nonconformance Reports

B. Corrective Action Reports

C. Management Assessment Reports

D. Action Items

E. Characterization NCRs

F. AK IDC Change records.

Virtual overpack. A virtual (on paper) waste package assembly consisting of six (55- or 83-/85-gal) drums in a wood box (SDOP), six 83-/85-gal drums banded to a metal pallet (SMOP), or eight 55-gal drums banded to a metal pallet (EMOP). Once the package is physically assembled, it is referred to by its designator of SDOP, SMOP, or EMOP, as applicable.

5.0 REFERENCES

(1) 1291-2006-025, Request for Criticality Safety Evaluation Extension for Loading SWBs

(2) 1291-2011-020, Enhanced SDOP Processing

(3) 1291-2012-027, Criticality Safety Evaluation for SMOP/EMOP

(4) 1291-2013-011, Criticality Safety Evaluation for Increased Liquid Volume Through Supercompactor

(5) AMWTP HWMA/RCRA Permit

(6) AMWTP HWMA/RCRA TSA Interim Status Document

(7) DOE/CBFO-94-1012, U.S. Department of Energy Carlsbad Field Office Quality Assurance Program Document

(8) EDF-0034, Criticality Safety Analysis for TRU Waste Storage

(9) EDF-0822, Criticality Safety Requirements Document Involving the RWMC Sludge Repackaging Project

(10) Form-1664, Mixed Low-Level Waste Container Inventory Sheet

(11) Form-1775, Virtual SWB Form

(12) Form-1862, Characterized Debris Virtual Overpack Assembly Form

(13) Form-1932, HWMA/RCRA Permit Review Second Verification

(14) Form-2091, Uncharacterized Debris Virtual Overpack Assembly Form

(15) INST-FOI-26, AMWTF Receipt, Storage, and Container Management

(16) INST-FOI-27, FTS Operations

(17) INST-OI-11, Waste Container Handling

(18) INST-TRUW-8.13.1, TRU Program Site Project Office Process

(19) INST-TRUW-8.13.3, TRU Program Acceptable Knowledge Process

(20) LST-EC&P-11, AMWTP HWMA/RCRA Permit WMF-676 Waste Management Criteria

(21) MP-DOCS-18.2, Records Management

(22) MP-LLW-19.4, Low Level Waste/Mixed Low Level Waste TSDF Disposition

(23) MP-LLW-19.7, Low-Level Waste/Mixed Low-Level Waste Verification

(24) MP-Q&SI-5.4, Identification of Nonconforming Conditions

(25) RPT-NFCS-07, Criticality Safety Evaluation for the AMWTF

(26) RPT-TRUW-83, Acceptable Knowledge Summary for Supercompacted Debris Waste

6.0 RECORDS

Records generated by this procedure are classified in accordance with the table below and dispositioned in accordance with MP-DOCS-18.2.

Record Description	Classification
MP-PRPL-22.1, Case File	Misc. Other Record/A16-1.2/Destroy 5 years after submittal or being superseded
Form-1829, Production Planning Non-Facility Move Sheet	Misc. Other Record/A16-1.2/Destroy 5 years after submittal or being superseded
Form-1830, Production Planning Checks for Boxes to WMF-676	Misc. Other Record/A16-1.2/Destroy 5 years after submittal or being superseded
Form-2017, Production Planning Checks for Direct Feed Drums to WMF-676	Misc. Other Record/A16-1.2/Destroy 5 years after submittal or being superseded
Form-2138, Production Planning Non-Facility Move Sheet for Verification Moves	Misc. Other Record/A16-1.2/Destroy 5 years after submittal or being superseded
Daily Electronic Inventory Analysis	Misc. Other Record/A23-1-a/For informational purposes only. Destroy at end of shift.
WWIS/WDS Waste Container Data Report	Record stored electronically in WDS (see WWIS-WDS-0001)

7.0 EXHIBITS

None

8.0 APPENDICES

Appendix A – AMWTP AK IDC Change Process Flow

Appendix A –
AMWTP AK IDC Change Process Flow

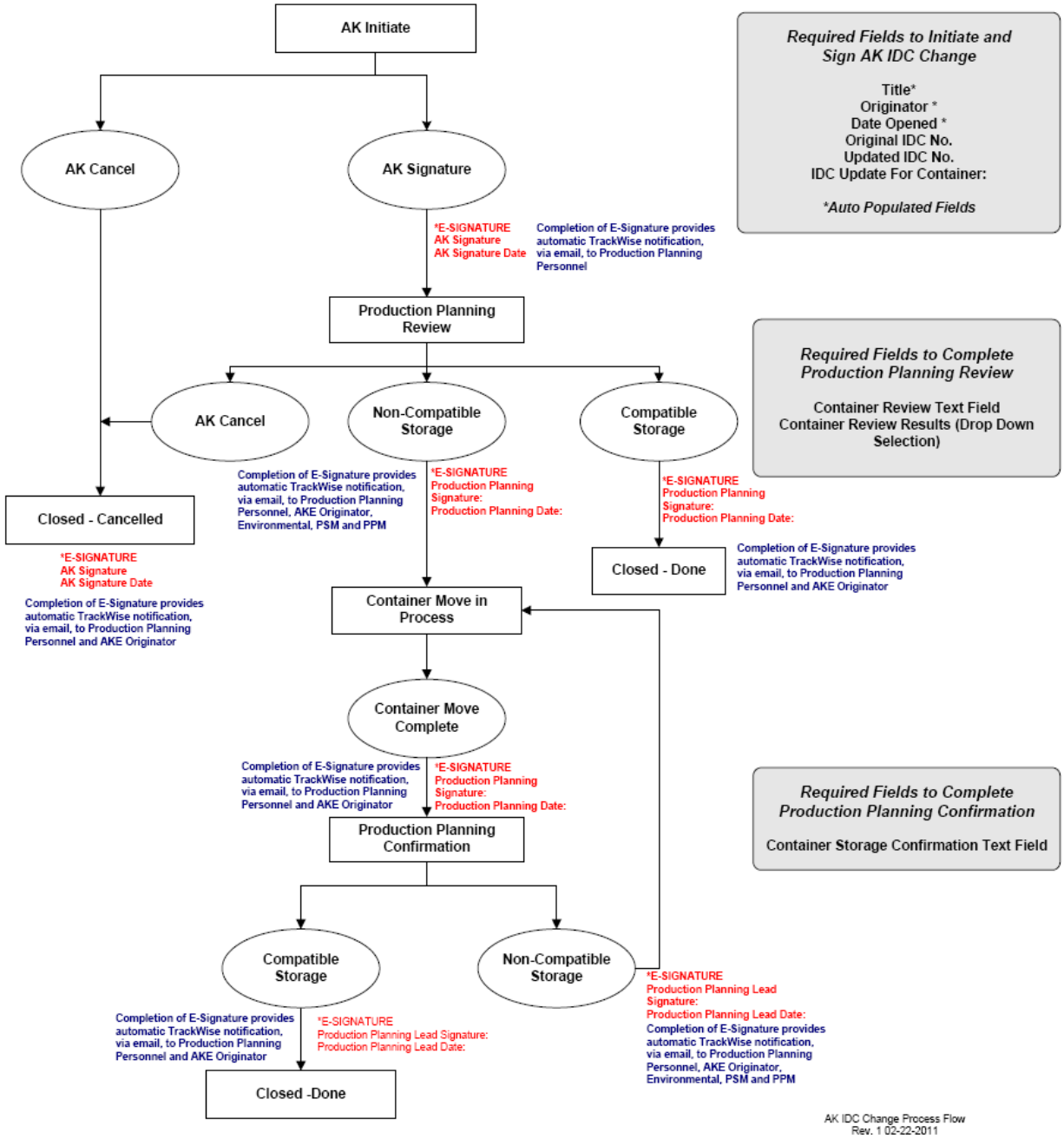

Investigation and Root Cause Analysis

Advanced Mixed Waste Treatment Project

Approved:

(Signature on file. See DCR-10706.)	09/13/12
Angie Morse Quality Assurance Engineer	Date

REVISION LOG

Revision Number	Date Approved	Pages Affected	Description of Revision
0	9/10/02	All	Initial issue, DCR-1009. This management procedure supersedes PQP 3.4 at Revision 0.
1	7/07/03	All	DCR-2045. Updated for clarification of scope processes and responsibilities; remove unnecessary requirements. Update records section.
2	2/18/04	All	DCR-2636. Updated to be consistent with changes from DOE Order 231.1A, *Environmental, Safety and Health Reporting (8-19-03)*, MP-COPS-9.6, *Occurrence Reporting*, and Corporate ESH Audit ESH-D-03-022; CAR 3806. This revision also constitutes a periodic review.
3	2/01/06	All	DCR-4774. Implement contract transition changes as identified on DCR-4299.
4	07/11/06	All	DCR-5006. Revision 4 is a complete rewrite. Revision 4 deletes Form-1302. Revision 4 modifies Roles and Responsibilities and reorders other sections according to MP-DOCS-18.3. Revision 4 addresses Action Item 18228 resulting from MAR 21717. Revision 4 addresses Action Item 20869 resulting from MAR 17336.
5	04/18/07	All	DCR-5852. Revised to implement actions addressing concerns from the Office of Enforcement PAAA Program evaluation. Reference CAR 25738. This revision includes changes in requirements for performance of formal root cause analysis.
6	10/02/08	Pg 4, Section 3.1.3.1	DCR-7596. Correct typographical error allowing a Team Lead or a Trained Investigator to be assigned.

Revision Number	Date Approved	Pages Affected	Description of Revision
7	06/04/09	All	DCR-8134. Revised to incorporate corrective actions from CAR 41741 and recommendations for improvements from MARs 25405 and 25409. Implemented corrective action from CAR 45152, AI 45474, to clarify the severity and risk based graded approach applied to root cause analysis and clarify the criteria in the definition of significant condition adverse to quality. In step 3.1.3.5, implemented corrective actions from CAR 44541. Deleted Appendix A, which will be replaced with GDE-Q&SI-01, Causal Analysis Tree. Updated references for trained investigator and contractual references.
8	08/25/09	Step 3.6.4	DCR-8595. Clarified the step regarding resolution of comments with the Team Lead.
9	09/13/12	Various	DCR-10706. Incorporated DOCS-BLUESHEET-05, DOCS-BLUESHEET-09 and ITG-BLUESHEET-244, Applied DOCS-BLUESHEET-08.

TABLE OF CONTENTS

1.0 PURPOSE/SCOPE 1

2.0 ROLES AND RESPONSIBILITIES 2

3.0 PROCEDURE 4

3.1 General Requirements 4

3.2 Investigation Scope for Formal Root Cause Analysis 7

3.3 Depth and Breadth of Formal Investigation and Root Cause Analysis 9

3.4 Collection of Data and Factual Evidence 10

3.5 Preparation of Formal Investigation and Root Cause Analysis Report 10

3.6 Review and Approval of the Formal Investigation and Root Casual Analysis Report 11

3.7 Corrective Action 11

3.8 CARB Review of Formal Investigation and Root Cause Analysis Report 12

4.0 DEFINITIONS 12

5.0 REFERENCES 15

6.0 RECORDS 16

7.0 EXHIBITS 16

8.0 APPENDICES 16

AMWTP MANAGEMENT PROCEDURE		
MP-Q&SI-5.1, Rev. 9	Issued: 09/13/12	Effective: 09/14/12
Investigation and Root Cause Analysis		

1.0 PURPOSE/SCOPE

This procedure describes the Advanced Mixed Waste Treatment Project (AMWTP) process and requirements for performance of investigations and root cause analyses, and applies to all AMWTP personnel responsible for performing root cause analyses. The conduct of an effective causal analysis is an essential step in developing the appropriate *corrective actions* (see def.) to prevent recurrence of an identified problem.

The level of investigation into root causes of problems is determined using a graded approach based on significance, severity, or risk associated with the condition. Root cause is determined through two methods: (1) formal investigation and root cause analysis performed by a trained investigator (for high risk conditions), and (2) apparent cause analysis (for lower risk conditions). Determination of problem significance is performed as specified in MP-Q&SI-5.3, Corrective Action.

This process implements requirements for causal analysis specified in the following documents:

- 10 CFR 830, Subpart A, Quality Assurance Requirements
- DOE O 226.1A, Implementation of Department of Energy Oversight Policy
- DOE O 231.1A, Environment, Safety, and Health Reporting
- DOE M 231.1-2, Occurrence Reporting and Processing of Operations Information
- DOE O 414.1C, Quality Assurance
- DOE O 422.1, Conduct of Operations
- DOE/CBFO-94-1012, Quality Assurance Program Document (QAPD)
- QAPP-01, Quality Assurance Program Plan.

The AMWTP process and requirements for conducting and reporting investigations and causal analysis are aligned with those specified in MP-COPS-9.6, Occurrence Reporting; MP-Q&SI-5.2, DOE HSS OE Reporting; and MP-Q&SI-5.3, Corrective Action.

2.0 ROLES AND RESPONSIBILITIES

Performer	Responsibilities
Corrective Action Review Board (CARB; see def.)	• Reviews conclusions from formal investigations and root cause analyses • Evaluates recommended actions and identified causes for adequacy of corrective actions to resolve and prevent recurrence of issues.
Quality Assurance (QA) -Manager	• Owns and maintains this procedure • Coordinates with the responsible manager to assign a formal root cause analysis investigation team lead and *trained investigator* (see def.) to an investigation team • Coordinates with the responsible manager to ensure the scope of the investigation and analysis is clearly established, and a completion date identified for timely corrective action development • Reviews/approves formal investigation and root cause analysis reports • Chairs and coordinates the CARB evaluation of approved formal investigation and root cause analysis reports.
Responsible Managers	• Coordinates with the QA Manager to identify the members assigned to the investigation team • Coordinates with the QA - Manager to establish the investigation and causal analysis scope • Reviews and approves formal inspection and root cause analysis reports for their areas of responsibility • Implements recommended corrective actions into the overall *corrective action plan* (CAP; see def.) for resolving and preventing problems • Determines root causes using apparent cause analysis for *conditions adverse to quality* (CAQ; see def.) that are not significant.

Performer	Responsibilities
Investigation Team Lead	• Ensures the scope and schedule of the investigation and analysis is communicated and understood by the investigation team • Coordinates the investigation team's collection of data and *objective evidence* (see def.) to ensure factual accuracy, comprehensive understanding of the condition under evaluation and identification of all associated issues and underlying causes • Coordinates the preparation of Form-1302, Root Cause Analysis Report, and ensures the requirements of this procedure are addressed during investigation and analysis of the problem(s) • Reviews recommendations for consistency with the evidence, identified causes, and overall conclusions of the formal investigation and root cause analysis report • Reviews and signs Form-1302 for submittal to the QA - Manager and responsible manager.

Performer	Responsibilities
Trained Investigator	• Has successfully completed the training requirements identified in QC-TI-RCA, Training Checklist for Trained Investigator • Knowledgeable of the event or condition being investigated • Conducts unbiased investigation of a reported problem to accurately determine all facts and issues for comprehensive understanding • Evaluates the problem and associated conditions to determine the full *extent of condition* (see def.) and *generic implications* (see def.) • Conducts structured causal analysis, addressing the requirements of this procedure, and determines the *root cause* (see def.) and any significant underlying/*contributing cause(s)* (see def.) • Develops conclusions and recommends corrective actions to correct the problem and prevent its recurrence • Ensures that recommended actions are clearly linked to the causal analysis.

3.0 PROCEDURE

3.1 General Requirements

3.1.1 QA Manager and Responsible Managers: Ensure root cause analysis (RCA) is conducted to determine the full extent of an event or condition (hereafter referred to as the condition) and any generic implications to identify effective corrective actions to resolve and prevent recurrence of the condition.

3.1.2 In determining the level of investigation to establish root cause, a graded approach is used based on the significance, severity, or risk associated with the condition, as shown in the following table:

Condition	Level of RCA
Type A or B investigation, as defined in DOE O 225.1A, Accident Investigations	AMWTP will not normally perform RCA beyond that performed during the Type A or B investigation.
Operational Emergencies directly caused by AMWTP operations	Formal RCA
Significant conditions adverse to quality (SCAQs; see def.) associated with the following: • Significance Category 1 and R *occurrence reports* (see def.) • Repetitive or programmatic Health, Safety and Security Office of Enforcement (HSS-OE) noncompliances • Nuclear safety or worker safety and health noncompliance associated with DOE M 231.1-2 occurrences	Formal RCA
Significant noncompliance affecting TRU waste certification	Formal RCA
Significance Category 2 occurrence reports	Root cause determined through a*pparent causal analysis* (see def.) performed by a trained investigator using best available information from documents such as critiques, log entries, etc.
10 CFR 820.11, Information Requirements, intentional violations or misrepresentations	Determined on a case-by-case basis by the QA Manager or the CARB.
Nonsignificant conditions adverse to quality	Root cause determined through apparent cause analysis, using best available information, such as critiques, log entries, etc.
Other conditions or events	As requested by the QA - Manager or responsible manager.

3.1.3 Responsible Manager: Determine root cause using apparent cause analysis and best available information for nonsignificant CAQs.

3.1.3.1 Apparent causal analysis includes conclusions from extent-of-condition review.

3.1.3.2 Apparent causal analysis for Significance Category 2 occurrence reports must be performed by a trained investigator.

NOTE: *Many structured causal analysis techniques are acceptable for investigating adverse events or conditions and identifying cause(s). This procedure does not require that any specific causal analysis methodology be used.*

3.1.4 QA Manager and Responsible Managers: Ensure that formal RCA includes a thorough investigation of the condition and associated issues, using an appropriate recognized, structured, causal analysis technique.

3.1.4.1 For human performance issues, ensure that a human performance improvement (HPI) analysis is conducted in conjunction with the RCA to ensure that the cause(s) of performance issues are analyzed and understood sufficiently to identify error precursors and appropriate corrective actions.

NOTE: *DOE G 231.1-2, Attachment 6, provides guidance that can be used in the HPI evaluation.*

3.1.4.2 Evaluate HPI causal determinations to identify any system failures that allowed the incorrect human performance.

3.1.4.3 Ensure that investigation and RCA are documented on Form-1302, Root Cause Analysis Report.

3.1.4.4 Establish and agree on the scope of the investigation and analysis, based on the significance, complexity, severity, or risk associated with the condition.

3.1.4.5 Identify a completion date based on Occurrence Reporting and Processing System (ORPS) and Noncompliance Tracking System (NTS) reporting requirements.

NOTE: *The investigation team will consist of at least one trained investigator who can also serve as the team lead. Other personnel may be assigned to provide technical discipline support or assist in data collection as necessary.*

3.1.5 Determine if an investigation team is appropriate and assign personnel to perform investigation and formal RCA.

3.1.5.1 A team with a trained investigator is required for formal RCAs associated with operational emergencies and Significance Category 1 ORPS events.

3.1.5.2 Assign an HPI investigator if needed.

3.1.5.3 Assign investigators to the team who are trained and qualified in formal cause analysis methodologies and the occurrence reporting process.

3.1.6 Responsible Manager: If a contract with an external organizations is needed to perform root cause analyses or provide causal analysis training, then develop a contract scope of work that specifies investigator credentials, data gathering, causal analysis, report content, report reviews/approvals, etc., consistent with the requirements of this procedure and appropriate for the contracted activity.

3.1.7 Trained Investigator: Determine the causal analysis technique to be used for formal investigation and root cause analysis. DOE-NE-STD-1004-92, Root Cause Analysis Guidance Document, provides discussion on analytical techniques and may be used for reference.

3.2 Investigation Scope for Formal Root Cause Analysis

3.2.1 The scope of the investigation must be such that full evaluation and characterization of the condition is determined so that the condition is effectively corrected. The following elements shall be addressed during a formal RCA and conclusions reported:

A. Extent of condition (EOC)

B. Precursor/Historical Review

C. Evaluation of Assessment Performance.

3.2.2 Team Lead/Trained Investigator: Ensure an EOC review is performed to determine the full extent and any generic implications of the condition.

3.2.2.1 The EOC review must determine whether the same condition exists elsewhere (i.e., transportability of condition) and whether the same root/underlying causes of the condition may be affecting performances in other processes, systems, or programs (i.e., transportability of cause).

3.2.2.2 The EOC review should not be limited to ORPS or *TrackWise* (see def.) database searches or trend data review, and should include focused field observations in conjunction with document reviews to:

A. Evaluate for the same condition in other processes, systems, facilities, or programs

B. Search for other manifestations of the identified root/underlying causes of the condition

C. Look for similar or related conditions, or conditions that can potentially be anticipated based on the condition under evaluation

D. Review prior applications of the deficient process/procedure, system, or program to determine if earlier deficiencies had existed unnoticed.

3.2.3 Team Lead/Trained Investigator: Ensure that a precursor/historical review is performed to determine if the same or similar condition has occurred previously. The review shall evaluate both the reported condition and root/underlying cause(s) to determine if the condition is recurrent.

3.2.3.1 A precursor/historical review is a retrospective analysis and can be effectively conducted through review of ORPS and TrackWise data, previous assessment results, and trending analysis data.

3.2.3.2 Team Lead/Trained Investigator: If it is determined that a condition is recurrent, then include analysis evaluation to determine why prior corrective actions were ineffective in preventing recurrence, and factor this evaluation into the recommended corrective actions.

3.2.4 Team Lead/Trained Investigator: Ensure that an evaluation of internal Assessment Performance is conducted and reported to determine if the condition should have reasonably been identified through implementation of the assessment program.

3.2.4.1 The purpose of this evaluation is to identify if any deficiencies exist in assessment scheduling, quality, or corrective action development and implementation.

3.3 Depth and Breadth of Formal Investigation and Root Cause Analysis

3.3.1 Team Lead/Trained Investigator: Ensure the depth and breadth of the analysis are conducted to the extent that the root/underlying conditions and any influences causing the condition, are effectively identified. As an example, identification of root/underlying causes such as "failure to follow procedures" must be further analyzed to determine why procedures were not followed.

3.3.1.1 The breadth of the analysis must be sufficiently conducted to identify all significant issues associated with a condition.

3.3.1.2 If a condition has existed for an extended period of time, it must be determined why the condition persisted without prior identification, as well as the specific causes of the condition.

NOTE: *GDE-Q&SI-01, Causal Analysis Tree, based on the DOE causal analysis tree, is available on the Electronic Document Management System (EDMS) for use in determining cause codes.*

3.3.2 Trained Investigator: Identify the root and any contributing cause(s) using the *ORPS cause codes* (see def.) specified in GDE-Q&SI-01, Causal Analysis Tree.

3.3.3 Trained Investigator: Identify applicable Integrated Safety Management System (ISMS) core function(s) to report any observed weaknesses in the AMWTP ISMS Program. Deficient ISMS core functions are considered *causal factors* (see def.).

3.4 Collection of Data and Factual Evidence

3.4.1 Trained Investigator: Collect sufficient objective evidence, considering the adverse event or condition being investigated. The type, quantity, and quality of data collected are determined by the event or condition and the causal analysis methodology used.

3.4.1.1 Data collection must begin promptly after an adverse condition so that relevant information is identified, collected, and preserved.

3.4.2 Team Lead/Trained Investigator: Ensure that data collection does not impair personnel safety or interfere with operations. Interviews shall be conducted so that personnel are not distracted from safely performing work.

3.4.3 Team Lead/Trained Investigator: Reference any relevant documents or records collected and used in conduct of the analysis in the root cause analysis report.

3.4.3.1 Prepare Form-1302 using the case file.

3.5 Preparation of Formal Investigation and Root Cause Analysis Report

3.5.1 Team Lead/Trained Investigator: Obtain a root cause analysis report number from the QA Manager.

3.5.2 Team Lead/Trained Investigator: Ensure resolution of any unsubstantiated or inconclusive concerns before issuance of the final report.

3.5.3 Team Lead/Trained Investigator: Ensure the final report conclusions provide concise statements of causal factors.

3.5.4 Do NOT include information subject to the *Privacy Act* (see def.), *unclassified controlled nuclear information* (UCNI; see def.), or *classified information* (see def.).

3.5.4.1 Document the results of the analysis on Form-1302.

3.5.4.1.1 Complete all sections of Form-1302.

3.5.4.1.2 Include relevant data from the analysis methodology.

3.5.4.1.3 Attach supporting documentation to Form-1302 as appropriate to support the conclusions.

3.5.4.1.4 Identify any *lessons learned* (see def.) as a result of the investigation and analysis.

3.6 Review and Approval of the Formal Investigation and Root Casual Analysis Report

3.6.1 Trained Investigator: Evaluate the draft Form-1302 for completeness, soundness of conclusions and causal analysis, and recommended corrective actions.

3.6.2 Trained Investigator: Sign the Form-1302 and submit it to the QA Manager and responsible manager for approval.

3.6.3 QA Manager and Responsible Manager: Review the submitted Form-1302 to determine that the scope of the investigation and analysis has been met, and that recommended corrective actions are clearly linked to the identified root cause(s).

3.6.4 QA Manager and Responsible Manager: Coordinate and resolve any comments on the submitted Form-1302 with the trained investigator and team lead (if one is designated), and document final approval signatures on Form-1302.

3.6.5 Coordinate the CARB evaluation of the approved formal investigation and root cause analysis report and place the approved report into TrackWise as a "Supplemental Document" of its corresponding *corrective action report* (see def.).

3.6.6 QA Manager: Transmit the original approved formal investigation and root cause analysis report to Records Management.

3.7 Corrective Action

3.7.1 Responsible Manager: Document corrective actions in TrackWise as specified by MP-Q&SI-5.3.

3.7.2 Evaluate the recommended corrective actions and develop a corrective action plan or update any existing corrective actions to implement the recommended corrective actions identified in the report.

3.7.3 If corrective actions cannot be implemented as recommended, then justify and identify corrective action(s) that clearly address the identified root cause(s) in the corresponding TrackWise corrective action report.

3.7.4 Identify the root cause from the root cause analysis report in the corresponding TrackWise corrective action report.

3.7.4.1 Obtain trained investigator determination of root cause through apparent cause analysis for Significance Category 2 occurrence reports.

3.8 CARB Review of Formal Investigation and Root Cause Analysis Report

3.8.1 CARB: Evaluate conclusions from approved formal investigation and root cause analysis reports and recommended corrective actions for SCAQs in accordance with MP-Q&SI-5.10, Corrective Action Review Board Charter, for effectiveness in resolving conditions and preventing their recurrence.

4.0 DEFINITIONS

Apparent cause. The most probable cause(s) that explains why the event (or CAQ) happened, that can reasonably be identified, that local or facility management has the control to fix, and for which effective recommendations for corrective action(s) to remedy the problem can be generated, if necessary.

Apparent causal analysis. A level of analysis based on best available information such as critiques, log entries, etc., that identifies the most probable root cause(s) of events or conditions.

Causal factor. A an event or condition that either caused the occurrence [adverse event or condition] under investigation or contributed to the unwanted result. If it were not for this event or condition, the unwanted result would not have occurred or would have been less severe.

Classified information. Classified information is any data or material that belongs to the federal government and relates to sensitive topics, such as military plans or the vulnerabilities of security systems.

Conditions adverse to quality. An all-inclusive term used in reference to any of the following: failures, malfunctions, deficiencies, defective items, and nonconforming conditions. All conditions adverse to quality are evaluated for significance.

Contributing cause. The cause(s) that contributed to, but that by itself would not have caused, the event or condition.

Corrective action. Measures taken to correct conditions adverse to quality and, where necessary, to preclude recurrence.

Corrective action plan. A documented plan used to identify the corrective actions necessary to correct conditions adverse to quality and prevent their recurrence.

Corrective action report. A document or system used to record and control correction of conditions adverse to quality through the process of evaluation and corrective action implementation.

Corrective Action Review Board. A committee comprised of a Chairman and AMWTP management. The CARB is chartered to evaluate SCAQs and any proposed CAPs. The evaluation is to ensure the adequacy and effectiveness of proposed corrective actions.

Extent of Condition. The transportability of an identified condition. As part of cause analysis and corrective action planning, consideration is given to where else the condition and/or causes might exist in other systems, processes, items, facilities, etc.

Generic implications. The transportability of a cause. Once an event of condition is understood, the impact of its cause(s) (apparent and/or root) on other areas or activities is determined.

Graded approach. The process of ensuring that the level of analysis, documentation, and actions used to comply with a requirement…are commensurate with: (1) the relative importance to safety, safeguards, and security; (2) the magnitude of any hazard involved; (3) the life cycle stage of a facility; (4) the programmatic mission of a facility; (5) the particular characteristics of a facility; (6) the relative importance of radiological and non-radiological hazards; and (7) any other relevant factor.

Lessons learned. A “good work practice” or innovative approach that is captured and shared to promote its repeated application. A lesson learned may also be an adverse work practice or experience that is captured and shared to avoid recurrence.

Objective evidence. Qualitative or quantitative information, records, data, and statements or fact pertaining to the characteristics of an item or service or to the existence and implementation of a process element. It is based on observation, measurement, or test, and can be verified.

Occurrence report. A written evaluation of an event or condition that is prepared in sufficient detail to enable the reader to assess its significance, consequences, or implications and evaluate actions taken to correct the condition or to avoid recurrence.

ORPS cause codes. Alpha-numeric codes selected from the GDE-Q&SI-01, Causal Analysis Tree, to identify the apparent causes of events and occurrences. Cause codes are used to categorize or bin apparent causes.

Privacy Act. The Privacy Act of 1974, 5 U.S.C. § 552a (2000), an omnibus "code of fair information practices" that attempts to regulate the collection, maintenance, use, and dissemination of personal information by federal executive branch agencies.

Reportable occurrence. An event or condition, to be reported according to the criteria defined in DOE Order 231.1A, *Environment, Safety, and Health Reporting*, and DOE M 231.1-2, *Occurrence Reporting and Processing of Operational Information*.

Root cause. The most basic cause(s) that explains why the event (or condition) happened, that can reasonably be identified, that senior management has the control to fix, and for which effective recommendations for corrective action(s) to remedy the problem, prevent specific recurrence of the problem, and preclude occurrence of similar problems can be generated, if necessary. This is typically one level further in analysis beyond the apparent causes(s) (i.e., one level beyond the Level C node of the causal analysis tree).

Root cause analysis. Any methodology that identifies causal factors that, if corrected, would prevent recurrence of an adverse event or condition.

Significant condition adverse to quality. A significant condition adverse to quality exists if:

A. The condition, if uncorrected, could have a serious impact on worker, public, environmental, radiological, or nuclear safety

B. The condition, if uncorrected, could have a serious impact on operational reliability, TRU Waste Certification Program compliance, or mission performance

C. Adverse conditions having programmatic or generic implications

D. Significant failure in worker safety and health requirements

E. Significant failure in QA program implementation

F. Pattern of a recurring condition adverse to quality such that the combined impact is indicative of a management or programmatic process breakdown.

TrackWise. This database provides the capability to create different documents requiring unique information fields and different notifications for approval or action and creates unique tracking/trending records.

Trained investigator. An individual who has been qualified to perform causal analysis in response to a *reportable occurrence* (see def.).

Unclassified controlled nuclear information. Under jurisdiction of the Department of Energy, UCNI includes unclassified facility design information, operational information concerning the production, processing or utilization of nuclear material for atomic energy defense programs, safeguards and security information, nuclear material, and declassified controlled nuclear weapon information once classified as Restricted Data (RD).

5.0 REFERENCES

(1) 10 CFR 820.11, Information Requirements

(2) 10 CFR 830, Subpart A, Quality Assurance Requirements

(3) Department of Energy Enforcement Program Plan,

(4) Department of Energy Office of Enforcement Guidance Supplement 05-01, Contractor Investigation, Causal Analysis, and Corrective Actions,

(5) DOE/CBFO-94-1012, Quality Assurance Program Document

(6) DOE O 414.1C, Quality Assurance

(7) DOE G 231.1-2, Occurrence Reporting Causal Analysis Guide

(8) DOE M 231.1-2, Occurrence Reporting and Processing of Operations Information

(9) DOE O 225.1A, Accident Investigations

(10) DOE Order 226.1A, Implementation of Department of Energy Oversight Policy

(11) DOE Order 231.1A, Chg 1, Environment, Safety, and Health Reporting

(12) DOE Order 422.1, Conduct of Operations

(13) MP-COPS-9.6, Conduct of Operations: Occurrence Reporting (ORPS)

(14) MP-DOCS-18.2, Records Management

(15) MP-Q&SI-5.2, DOE HSS OE Reporting

(16) MP-Q&SI-5.3, Corrective Action

(17) MP-Q&SI-5.10, Corrective Action Review Board Charter

(18) QAPP-01, Quality Assurance Program Plan

(19) GDE-Q&SI-01, Causal Analysis Tree

(20) DOE-NE-STD-1004-92, Root Cause Analysis Guidance Document

6.0 RECORDS

Records generated by this procedure shall be classified in accordance with the table below, and dispositioned in accordance with MP-DOCS-18.2, Records Management.

Record Description	Classification
MP-Q&SI-5.1, Case File	Nonpermanent/QA WIPP / ENV1-J-1 / Submit to RMC for long term storage. Destroy 10 years after submittal or transfer to the WIPP Records Archive Facility at end of project/program.
Form-1302, Root Cause Analysis Report	FOR/Nonpermanent/QA WIPP / ENV2-a-1-a / Submit to RMC for long term storage. Destroy 5 years after life of facility or transfer to WIPP Records Archive Facility or DOE-ID Records Storage Facility, as appropriate, at end of project/program.

7.0 EXHIBITS

None

8.0 APPENDICES

None

Corrective Action

Advanced Mixed Waste Treatment Project

Approval:

(Signature on file. See DCR-10557.)

07/03/13
Date

REVISION LOG

Revision Number	Date Approved	Pages Affected	Description of Revision
0	9/3/02	All	Initial issue DCR-1007. This MP supersedes PQP 3.1 Revision 1.
1	2/18/03	Pg.8, Section 4.0, Step 4.1.2 Pg. 15, Section 6.0	DCR-2029, Revised Procedure to incorporate comments provided by CBFO Adequacy Review.
2	4/28/03	Pg. 11, Section 5.3, Step 5.3.4	DCR-2223. Revised to incorporate CBFO comments. Update references.
3	6/17/03	P. 14, Section 5.6.1, P. 14, Section 5.7 P. 6, Section 3.0 P. 15, Section 6.0	DCR-2280. 1.) Incorporate comments resulting from WIPP PE - removed unnecessary requirements on review cycle period. 2.) Correct errors and update for accuracy & consistency with other Q&SI procedures. 3.) Update records section.
4	2/19/04	All	DCR-2637. Updated to be consistent with changes from DOE Order 231.1A, Environmental, Safety & Health Reporting (8-19-03) and MP-COPS-9.6, Occurrence Reporting. Updated definitions & clarifications of closure activities.

Revision Number	Date Approved	Pages Affected	Description of Revision
5	04/08/05	Various	DCR 4037. Revised to incorporate TrackWise® process improvements. Editorial/format changes to comply with MP-DOCS-18.3. Incorporated CBFO review comments on Rev 5A. Revised to implement corrective actions from CAR-7015, ORR Post-Start. Added new Section 5.1, Roles and Responsibilities. Revised Section 5.5.1 to specify disposition response time and clarify disposition information.
6	2/14/06	All	DCR 4686. Revision 6 is a complete rewrite. This revision addresses issues raised in parent CAR 12259 and child CAR 12274. This revision adds Roles and Responsibility and reorders other sections according to MP-DOCS-18.3. Revision 6 requires completion of corrective action planning within 45 days from ORPS Categorization, or CAR validation. Revision 6 requires approval by the AWMTP President and General Manager for corrective actions that require greater than 90 days to complete. Revision 6 aligns the corrective action process with Bechtel Corporate BSII QA Department requirements. This revision retains original DOE, DOE-CBFO, and AMWTP QAPP requirements.
7	9/08/06	1, 2, 3, 5, 7, 9, 15, 16	DCR-5187. Update to address DOE O 226.1, Contractor Requirements for Contractor Assurance Systems and include prioritization in the corrective action process for consistency with ISMS.
8	10/24/06	Page 8 Section 3.6.2.1	DCR-5428.Step 3.6.2.1 added to update and improve procedure as a result of NTS audit.

Revision Number	Date Approved	Pages Affected	Description of Revision
9	04/19/07	Various	DCR-5657. Implement clarifications and process improvements, editorial changes, and updated definitions. Replaces previous 4 levels for determining significance of conditions adverse to quality with significant CAQs or non-significant CAQs. Clarifies instructions for corrective action plan development. Format changes for consistency with MP-DOCS-18.3.
10	06/04/09	All	DCR-8225: Revision to implement corrective actions from CAR 41741 and CAR 44561, and improvement actions from Management Assessments 25405 and 25409, assigned through Action Item 28871. Implement corrective action from CAR 45152, Action Item 45475, to clarify the severity and risk based graded approach applied to root cause analysis, and clarify the criteria for determining significance. Updates per Bluesheet-01. Periodic review.
11	10/13/10	Various	DCR-9280. Incorporated allowance in Section 3.2 for the use of the NCR reporting process for ORPS events that are equipment failure related, aligning with MP-COPS-9.6 and QA program intent. Incorporated DOCS-BLUESHEET-05 and updates for periodic review. Changed NTS to NNSS.
12	09/13/12	Various	DCR-10557. Incorporated DOCS-BLUESHEET-08 and ITG-BLUESHEET-244
13	07/03/13	Various	DCR-12464. Updated DOE references resulting from changes in Contract Mod 18. Incorporated changes in corrective action plan development, new TrackWise form for child corrective actions and updated Appendix A.

TABLE OF CONTENTS

1.0 PURPOSE/SCOPE 1

2.0 ROLES AND RESPONSIBILITIES 2

3.0 PROCEDURE 4

3.1 Stop Work 4

3.2 Identifying and Reporting Conditions Adverse to Quality 5

3.3 Corrective Action Report Management Validation 7

3.4 Corrective Action Report QA Evaluation 8

3.5 Notification and Transmittal to DOE-Carlsbad Field Office (CBFO) 10

3.6 Development of Corrective Action Plans 11

3.7 Completion of Corrective Actions 15

3.8 Corrective Action Effectiveness Reviews 16

4.0 DEFINITIONS 18

5.0 REFERENCES 20

6.0 RECORDS 22

7.0 EXHIBITS 22

8.0 APPENDICES 22

Appendix A – Using TrackWise to Initiate Report, Document, and Communicate Conditions Adverse to Quality through Corrective Action Reports A1

AMWTP MANAGEMENT PROCEDURE		
MP-Q&SI-5.3, Rev. 13	Issued: 07/08/13	Effective: 07/08/13 @ 0700
Corrective Action		

1.0 PURPOSE/SCOPE

This procedure describes the Advanced Mixed Waste Treatment Project (AMWTP) *corrective action* (see def.) process and requirements for identifying, reporting, evaluating, and correcting *Conditions Adverse to Quality* (CAQs; see def.), verifying completion of corrective actions taken, and performance of corrective action *effectiveness reviews* (see def.).

This procedure establishes requirements for implementation of an integrated corrective action process as specified in 10 CFR Part 830, Subpart A, Quality Assurance Requirements; U.S. Department of Energy (DOE) Order (O) 414.1D, Quality Assurance*;* DOE O 226.1B, Implementation of Department of Energy Oversight Policy, Attachment 1, Contractor Requirements Document; DOE O 227.1, Independent Oversight Program; DOE-CBFO-94-1012, Quality Assurance Program Document; and QAPP-01, Quality Assurance Program Plan.

All program and performance deficiencies, regardless of their source shall be documented and tracked in TrackWise to ensure that adverse conditions are reported, assigned to, and evaluated by the responsible management; and to document and track the development, implementation, completion, and verification of corrective actions.

AMWTP management is responsible to prepare, implement, and track to completion *corrective action plans* (CAPs; see def.) to correct and prevent adverse conditions. The corrective action process is aligned with requirements for corrective action specified in MP-COPS-9.6, Occurrence Reporting, and MP-Q&SI-5.2, DOE HSS OE Reporting.

This procedure applies to all AMWTP personnel, contractors, and subcontractors performing work at AMWTP.

2.0 ROLES AND RESPONSIBILITIES

Performer	Responsibilities
All AMWTP Personnel, Contractors, and Subcontractors	• Report and correct CAQs using this procedure, or if appropriate, MP-Q&SI-5.4, Identification of Nonconforming Conditions.
AMWTP Quality Assurance (QA) Manager	• Owns and maintains this procedure • Administers *TrackWise* (see def.) Issues Management reporting system • Evaluates all reported CAQs • Identifies areas for corrective action effectiveness reviews through QA assessment and surveillance planning • Evaluates reports from external reviews for conditions requiring corrective action reporting in accordance with this procedure. • Ensures that Health, Safety and Security Office of Enforcement (HSS-OE) screening and reporting requirements are met • Ensures notification to the Inspector General's office upon identification of *suspect/counterfeit items* (see def.) • Conducts analysis of *Corrective Action Report* (CAR; see def.) data to identify adverse trends with repetitive or programmatic implications. • As needed, issues *Stop Work Orders* (see def.) to mitigate a *significant condition adverse to quality* (SCAQ; see def.) having programmatic or generic implications • Approves proposed corrective action completion dates that extend beyond 90 calendar days from the date of CAR QA validation. • Approves requests to extend completion dates of proposed and/or approved corrective actions that exceed, or will exceed, scheduled date to close.

Performer	Responsibilities
Departmental Manager	• Assigns department TrackWise coordinators to support management of CARs and other quality issues, as necessary.
QA Department	• Verifies actions taken to correct CAQs and validates CAR closure • Advises responsible managers if additional corrective action is required • Evaluates the effectiveness of completed corrective actions through surveillance and assessment.
Responsible Managers at all levels	• Prepare, implement, and track to completion CAPs to correct and prevent recurrence of adverse conditions • Coordinate with other line management for assignment of CAPs • Submit requests for extensions of approved CAPs to the QA Manager with justification for the extension. • Evaluate and take action to correct a reported CAQ for which they are responsible. • Evaluate reports from external reviews for conditions requiring corrective action reporting in accordance with this procedure. • Determine the level of response and analysis required to correct a CAQ and address underlying cause(s) to prevent recurrence. • Manage the CAP to ensure closure • Implement corrective action effectiveness reviews as assigned from the *Corrective Action Review Board* (CARB; see def.) • Ensure formal root cause analyses are performed for events as described in Step 3.6.3.
TrackWise Coordinator	• Provides TrackWise status reports for department open actions, as requested. • Manages actions due and coming due. • Notifies department members for current actions.

Performer	Responsibilities
Corrective Action Review Board	• Reviews corrective actions for adequacy in resolving significant conditions adverse to quality, operational emergencies directly caused by AMWTP operations, and Significance Category 1, 2, and R *occurrence reports* (see def.) • Assigns responsibilities for effectiveness reviews of implemented corrective actions for significant conditions adverse to quality.
Assigned Personnel	• Perform effectiveness reviews for corrective actions.

3.0 PROCEDURE

NOTE 1: *A CAQ is "an all-inclusive term used in reference to any of the following: failures, malfunctions, deficiencies, defective items, and nonconformances." All CAQs are evaluated for significance in accordance with Step 3.4.3.*

NOTE 2: *Appendix A provides guidance on the use of TrackWise for corrective action reporting and processing.*

3.1 Stop Work

3.1.1 All AMWTP personnel are empowered with Step Back and Stop Work Authority. (This may include when new hazards or unsafe workplace conditions are encountered, approved procedures or work control documents cannot be worked as written, or conditions adverse to compliant operations are identified.)

NOTE: *A CAQ may pose an immediate threat to worker safety, public health, or to the environment.*

3.1.1.1 Personnel who identify unsafe conditions, or believe that such conditions exist, shall stop work and immediately report the condition to their shift supervisor, Plant Shift Manager, supervisor, or manager (referred to as supervisor or manager hereinafter).

3.1.2 Responsible management must evaluate all employee stop work actions to identify any associated CAQs for reporting, as required by this procedure.

3.1.3 The QA manager must determine if a SCAQ having programmatic or generic implication justifies issuing a formal stop work order.

3.1.3.1 If issued, the CAR becomes the record of a stop work order issuance.

3.2 Identifying and Reporting Conditions Adverse to Quality

3.2.1 All AMWTP personnel, including contractors and subcontractors, shall identify and report any CAQs using this procedure or MP-Q&SI-5.4, as applicable.

3.2.1.1 Personnel shall promptly notify and discuss such conditions with their supervisor or manager, and affected personnel to determine the need for any immediate action.

3.2.2 AMWTP personnel must document and report all conditions adverse to quality, regardless of their source, in TrackWise to ensure that adverse conditions are documented, evaluated, resolved, and tracked to completion.

3.2.3 AMWTP personnel shall use TrackWise to notify, report, document, track, and communicate identified CAQs.

3.2.3.1 Personnel who do not have access to TrackWise, or are unfamiliar with its use, should obtain assistance from their supervisor or manager, the AMWTP TrackWise Coordinator, or other AMWTP personnel as necessary.

NOTE 1: *Computer-based training AWT4138C, AMWTP TrackWise System, provides a user overview of TrackWise. Personnel should consult the AMWTP TrackWise Coordinator if help is needed.*

NOTE 2: *Appendix A provides guidance on the use of TrackWise for generating corrective action reports.*

3.2.4 Using TrackWise, the CAR originator must reference the requirement that is violated and describe the condition that violates the requirement.

3.2.4.1 The CAR originator is responsible to report the condition accurately, completely, and factually.

NOTE: *Operations events reported in the Occurrence Reporting and Processing System (ORPS) are also entered in TrackWise CAR or nonconformance report (NCR) reporting processes. The NCR process is typically used for ORPS events that are attributed to equipment failures which are NOT the result of a noncompliance with a requirement and for reported suspect/counterfeit material items.*

3.2.5 The responsible manager must initiate a CAR or NCR for any *reportable occurrence* (see def.) as determined in accordance with MP-COPS-9.6.

3.2.5.1 NCRs are reported in accordance with MP-Q&SI-5.4.

NOTE 1: *DOE M 231.1−2, Occurrence Reporting and Processing of Operations Information, requires prompt reporting of all suspect/counterfeit items (S/CIs) to the DOE, regardless of their location or application, by means of ORPS, and to the local DOE Office of the Inspector General (OIG).*

NOTE 2: *In general,* nonconforming conditions *(see def.) concerning "items or products" may be dispositioned in accordance with MP-Q&SI-5.4. However, reported nonconforming conditions caused by systemic deficiencies, or programmatic failures are reported on a CAR to ensure corrective actions are taken to prevent recurrence.*

3.2.6 AMWTP personnel must initiate an NCR in accordance with MP-Q&SI-5.4 for all S/CIs identified.

3.2.7 The responsible manager must document CAQs identified through independent or management assessment, worker observation, external audit, or surveillance of AMWTP activities on a CAR or NCR and disposition according to this procedure or MP-Q&SI-5.4, respectively.

3.2.8 The responsible manager reviews and validates information from external reports for factual accuracy to identify any CAQs.

3.2.8.1 Inaccurate information shall be communicated back to the identifying organization to ensure clear and factual understanding of the concern.

3.2.8.2 Observations, recommendations, or opportunities for improvements from internal or external reports are entered in TrackWise as action items (AIs) at the discretion of the responsible manager(s).

NOTE: *A customer concern may cause initiation of a CAR in accordance with this procedure when considering risk and severity.*

3.2.9 Personnel initiating a CAR must confer with the supervisor or manager prior to initiating a CAR to address a customer concern.

3.3 Corrective Action Report Management Validation

NOTE: *TrackWise assigns a CAR number and notifies the originator's supervisor or manager that a CAR is ready for review.*

3.3.1 The supervisor or manager must evaluate and validate the reported condition as a CAQ or recommend cancellation of a CAR.

3.3.1.1 The supervisor or manager must provide a justification statement in TrackWise for recommending cancellation of a CAR as invalid.

3.3.2 The supervisor or manager must evaluate the CAQ, and determine if *compensatory actions* (see def.) are necessary to mitigate the CAQ.

3.3.3 If the CAR is determined to be valid, the supervisor or manager should identify the responsible manager, who will assume responsibility for correcting the CAQ.

3.3.3.1 The supervisor or manager must ensure that the assigned responsible manager agrees with the reported condition within the assigned manager's area of responsibility.

3.3.3.1.1 If mutual agreement cannot be reached, then the issue shall be elevated to the respective department managers.

NOTE 1: *A CAR status will remain at "Initiate" until validated or rejected by the supervisor or manager, or until 7 calendar days have elapsed, at which time the CAR is advanced automatically to "QA Evaluation."*

NOTE 2: *All CARs are advanced to QA evaluation.*

3.4 Corrective Action Report QA Evaluation

3.4.1 The QA manager/designee must review the basis for all CARs recommended for cancellation, and if the basis is determined to be valid, complete the cancellation in TrackWise.

3.4.1.1 QA must concur with the recommendation for cancellation.

3.4.1.2 If the review concludes that the CAR is reporting a valid condition adverse to quality, coordinate with the responsible manager, and reinstate the CAR for evaluation in TrackWise.

3.4.1.3 The basis for reinstated CARs must be documented in the TrackWise CAR description.

3.4.2 The QA manager/designee must evaluate all CARs and confirm the selection of the responsible manager.

3.4.2.1 If the CAR was automatically advanced to QA Evaluation, then a responsible manager must be identified.

3.4.2.2 If a CAR involves Nevada National Security Site (NNSS) data, then the NNSS waste certification official at AMWTP must be notified via TrackWise for CAR evaluation and determination of impacts to NNSS certified program.

3.4.2.3 If a CAR involves WIPP requirements, then the QA manager/designee must screen for reporting to the Carlsbad Field Office (CBFO), and notify the Site Project Manager (SPM) of screening results prior to submittal to CBFO.

3.4.3 The QA manager/designee must perform the following for all identified CAQs:

3.4.3.1 The significance of the CAQ must be determined.

3.4.3.1.1 An SCAQ exists if:

A. The condition, if uncorrected, could have a serious impact on worker, public, environmental, radiological or nuclear safety

B. The condition, if uncorrected, could have a serious impact on operational reliability, TRU Waste Certification Program compliance, or mission performance.

C. Adverse conditions having programmatic or generic implications

D. Significant failure in worker safety and health requirements

E. Significant failure in QA program implementation

F. Pattern of a recurring CAQ such that the combined impact is indicative of a management or programmatic process breakdown.

3.4.3.2 Upon determination that a SCAQ exists, the QA Manager and the responsible department manager must be verbally notified.

3.4.3.3 All CARs must be screened for HSS-OE noncompliance applicability and reportability in accordance with MP-Q&SI-5.2.

3.4.3.4 A due date for development of corrective actions must be established based on the following, up to a maximum of 45 days:

- The date of initial ORPS categorization, for CARs generated from an ORPS-reportable event
- The date of the HSS-OE noncompliance determination of reportability in the Noncompliance Tracking System.

NOTE: *CARs validated by QA are advanced in TrackWise to the responsible manager for CAP development, as specified in Section 3.6.*

- For all other CARs, from the date that QA manager reviewed and validated the CAR.

3.5 Notification and Transmittal to DOE-Carlsbad Field Office (CBFO)

3.5.1 The QA Manager/designee must screen valid CARs for WIPP Waste Analysis Plan (WAP), Resource Conservation and Recovery Act (RCRA)-related compliance issues.

3.5.1.1 If it is determined that a CAR is a WIPP RCRA-related noncompliance, then this determination is communicated to the TRU Programs SPM.

3.5.1.2 All WIPP-WAP, RCRA-related CARs must be submitted to the CBFO for tracking and closure.

3.5.2 Electronic notifications of any WIPP-WAP RCRA-related CARs must be submitted to CBFO by email as follows:

3.5.2.1 The e-mail subject line must be annotated with "[CAR]" preceding the subject, to ensure automatic transfer into the proper folder of the receiving system.

3.5.2.2 Notifications are submitted to the following email address: wipp.notify@wipp.ws

NOTE: *Hard-copy transmittals may be used if electronic submittal is unavailable.*

3.5.3 CBFO should be notified using hard-copy transmittal if electronic transmission is unavailable. Correspondence is sent via FEDEX to the following address:

- U.S. Department of Energy Carlsbad Field Office
  4021 National Parks Hwy
  Carlsbad, NM 88220
  Attn: Quality Assurance Manager

- Washington TRU Solutions
  P.O. Box 2078
  Carlsbad, NM 88221-2078.

3.6 Development of Corrective Action Plans

NOTE 1: *If the CAR/CAP identifies a potential deficiency in Emergency Actions/Response, safety-significant systems, or project inadequacies, it may be Sensitive Unclassified Information (SUI) and subject to the requirements outlined in MP-SCTY-16.3, Information Security. If information falls within the SUI guideline, a separate process may be necessary to prevent placing SUI in TrackWise. For questions regarding SUI, personnel should contact Security or refer to MP-SCTY-16.3.*

NOTE 2: *TrackWise records should never associate individual names with accidents or injuries.*

3.6.1 Corrective action plans are prepared to resolve all CAQs and, where necessary, to prevent recurrence.

3.6.2 The responsible manager must evaluate the reported condition, affected requirement, and any relevant information such as fact findings or critiques to determine the level of response and analysis required to correct the CAQ; develop corrective action(s) and take timely action to correct the CAQ; and manage the CAP to ensure closure.

3.6.2.1 If evidence exists that indicates the reported CAQ is not valid, the basis and supporting evidence is documented in the Corrective Action Plan section, justifying the basis for not taking corrective action, and submitted to QA for review.

NOTE: *The level of investigation into root causes of problems is determined using a graded approach based on significance, severity, or risk associated with the condition. Root cause is determined in accordance with MP-Q&SI-5.1, Investigation and Root Cause Analysis, through two methods: (1) formal investigation and root cause analysis performed by a trained investigator (for high risk conditions), and (2) apparent cause analysis (for lower risk conditions).*

3.6.3 Formal investigation and root cause analysis performed by a trained investigator are required for SCAQs associated with the following:

- Operational emergencies directly caused by AMWTP operations
- Significance Category 1 and R occurrence reports
- Repetitive or programmatic HSS-OE noncompliances
- Nuclear Safety or Worker Safety and Health noncompliances associated with DOE M 231.1-2 Occurrence Reporting and Processing of Operational Information
- Significant noncompliances affecting transuranic (TRU) waste certification.

NOTE: *Apparent cause analysis will determine the most probable root cause of an event or condition that management has the control to remedy and correct through action to prevent recurrence.*

3.6.3.1 For Significance Category 2 occurrence reports, a trained investigator determines root cause through apparent cause analysis, using best available information from relevant documents (such as critiques, log entries, etc.).

3.6.3.2 The responsible manager must select the root cause established from *formal root cause analysis* (see def.) for SCAQs or from *apparent cause* (see def.) analysis in TrackWise using the three ORPS-level codes.

3.6.3.3 The responsible manager should refer to GDE-Q&SI-01, Causal Analysis Tree, for cause code reference.

3.6.4 The responsible manager must include the following in CAPs for SCAQs:

- *Immediate actions* (see def.) taken, if applicable
- Compensatory actions, if needed, to offset the impact of a SCAQ pending *remedial action* (see def.)
- Remedial actions necessary to resolve the specific condition
- *Extent of condition* (see def.), impact, and risk
- Root cause
- *Preventive actions* (see def.) to address underlying causes and preclude recurrence.

NOTE: *Human performance issues for SCAQs are evaluated as part of the formal investigation and root cause analysis in accordance with MP-Q&SI-5.1.*

3.6.5 The responsible manager should include the following in corrective action plans for non-significant CAQs:

- Remedial actions
- Remedial actions may be sufficient to correct a minor problem; however, the responsible manager should evaluate the condition to determine if an extent-of-condition evaluation is needed to determine any necessary actions to preclude recurrence.
- Apparent cause summary based on readily available information at the time of investigation
- Root cause established through apparent cause analysis in accordance with MP-Q&SI-5.1 and GDE-Q&SI-01

NOTE: *The responsible manager coordinates with the Human Performance Improvement (HPI) coordinator to ensure that human performance issues are properly evaluated.*

- Human performance issues evaluated in sufficient detail to identify the appropriate corrective actions and determine if valid system or process problems existed to influence the human performance.

3.6.6 Individual Child Corrective Actions are required for corrective action plans involving multiple corrective actions and actionees, and to establish interim completion dates.

3.6.6.1 Child Corrective Actions must be scheduled and assigned in TrackWise prior to QA approval of the CAP.

3.6.7 Managers responsible for a CAQ must ensure the CAP is documented in TrackWise and is completed within 90 calendar days of CAR validation by the QA Manager.

3.6.7.1 Proposed corrective actions requiring greater than 90 days for completion must be approved by the QA Manager.

3.6.8 The responsible manager must evaluate the CAQs to the extent necessary to:

- Determine the risk and impact
- Identify root cause and remedial actions necessary to correct the specific condition
- Identify corrective actions to correct the condition and preclude recurrence as applicable.

3.6.9 CAPs must be submitted to QA for concurrence within the established date for corrective action development.

3.6.9.1 If corrective actions will exceed the 90 day completion, then a request and justification for an extension of the due date must be submitted to the QA manager for approval prior to final CAP approval.

NOTE: *The QA manager/designee evaluation will confirm the CAP completion date is due within 90 calendar days of QA manager evaluation or justification is documented approving the extension.*

3.6.10 The QA manager/designee must evaluate proposed CAPs to ensure that the analysis and corrective actions are commensurate with the significance and complexity of the problem and will effectively resolve the condition.

3.6.10.1 If additional analysis or corrective action is deemed necessary, the responsible manager should be consulted and the CAR returned for additional corrective action.

3.7 Completion of Corrective Actions

NOTE: *All corrective actions to address resolution of identified CAQs must be completed within 90 days of validation of the condition. The significance and risk of the adverse condition and its affect on safety must be considered for prioritization in corrective action completion.*

3.7.1 The responsible manager must take necessary action to complete the CAP for closure of a CAR within the 90 calendar day period.

3.7.2 The TrackWise coordinator must monitor department open actions and provide status reports to the responsible management, as needed.

3.7.3 The responsible manager must request approval from the QA manager when approved corrective actions exceed, or will likely exceed, the scheduled date to close.

3.7.4 The QA manager attaches documentation of all extension request approvals.

3.7.5 The responsible manager shall generate and attach or reference in TrackWise, sufficient *objective evidence* (see def.) of CAP completion that can be used to verify corrective action completion for CAR closure.

3.7.6 The QA department must verify completed corrective actions for all CAQs and document that verification using TrackWise.

3.7.7 QA must document any closure verification failures in the TrackWise notification to the responsible management.

3.7.7.1 If a revision to the CAP is necessary, then the CAR is returned to the responsible manager for additional disposition.

3.7.7.1.1 The QA Manager and responsible manager must document concurrence through resubmittal and approval of the revised CAP.

3.7.8 When completion of the corrective action and any associated CAs, and applicable objective evidence has been verified, then the QA Department will document the verification in TrackWise and close the CAR.

3.8 Corrective Action Effectiveness Reviews

NOTE 1: *The objective of a corrective action effectiveness review is to determine whether completed corrective actions have been effectively implemented and sustained to prevent recurrence of significant issues, problems, or events.*

NOTE 2: *Corrective action effectiveness reviews are conducted using a graded approach based on risk.*

NOTE 3: *Effectiveness reviews will be conducted after implementation of corrective actions, allowing sufficient time for the corrective actions to take effect, but within approximately 6 months of corrective action completion.*

NOTE 4: *Effectiveness reviews may be performed through management assessments or QA surveillances, or may be included in the scope of a formal QA independent assessment.*

3.8.1 The QA manager must perform effectiveness reviews to validate corrective actions are effective for SCAQs associated with the following:

- Operational emergencies directly caused by AMWTP operations
- ORPS Significance Category 1 and R events
- Repetitive or programmatic HSS-OE noncompliances
- Nuclear Safety or Worker Safety and Health noncompliances associated with DOE M 231.1-2 occurrences.

3.8.2 The QA manager or responsible manager must perform effectiveness reviews for significance Category 2 ORPS reports, as directed by the CARB.

3.8.2.1 For other SCAQs and for non-significant CAQs, a risk-based determination should be made of whether it is necessary to perform an effectiveness review of corrective actions.

3.8.3 The QA manager or responsible manager must assign personnel who are sufficiently independent of the corrective actions taken to perform the effectiveness review.

3.8.4 The assigned personnel, using a risk-based graded approach, should determine the effectiveness of corrective actions through the following:

A. Validation that implemented corrective actions have been sustained

B. Evaluation that the corrective actions have adequately addressed the original causal factors to prevent recurrence of the problems or events

C. Evaluation that the implemented corrective actions did not introduce new problems or events.

3.8.4.1 Identify where a revision to corrective actions is necessary to effectively resolve the problem or event.

4.0 DEFINITIONS

Apparent cause. The most probable cause(s) that explains why the (CAQ) event happened, that can reasonably be identified, that local or facility management has the control to fix, and for which effective recommendations for corrective action(s) to remedy the problem can be generated, if necessary.

Compensatory action. An interim action taken to offset an error, defect, or undesired effect pending remedial action.

Condition adverse to quality. An all-inclusive term used in reference to any of the following: failures, malfunctions, deficiencies, defective items, and nonconforming conditions.

Contributing cause. The cause(s) that contributed to the (CAQ) occurrence but, that by itself would not have caused the (CAQ) occurrence.

Corrective action. Measures taken to correct conditions adverse to quality and, where necessary, to preclude recurrence.

Corrective Action Plan. A documented plan used to identify the corrective actions necessary to correct conditions adverse to quality and prevent their recurrence.

Corrective Action Report. A document or system used to record and control correction of conditions adverse to quality through the process of evaluation and corrective action implementation.

Corrective Action Review Board. A committee comprised of a chairman and AMWTP management. The CARB is chartered to evaluate Significant Conditions Adverse to Quality and any proposed Corrective Action Plans. The evaluation is to ensure the adequacy and effectiveness of proposed corrective actions.

Effectiveness review. A review to determine whether completed corrective actions have been effectively implemented and sustained to prevent recurrence of significant issues, problems, or events.

Extent of condition. The transportability of an identified condition. As part of CAQ analysis and corrective action planning, consideration is given to where else the condition might exist in other systems, processes, items, facilities, etc.

Formal root cause analysis. An investigation using trained cause analysts and subject matter experts, as needed, to determine the underlying root cause and any contributing causal factors of a Significant CAQ. From the analysis, recommended corrective actions will be planned that if implemented will correct the SCAQ and prevent its recurrence.

Immediate Actions. Actions taken by project personnel to place the facility in a safe configuration following an unanticipated event.

Nonconforming condition. A deficiency in characteristic, documentation, or procedure that renders the quality of an item, material, or product unacceptable or indeterminate.

Objective evidence. Qualitative or quantitative information, records, data, and statements or fact pertaining to the characteristics of an item or service or to the existence and implementation of a process element. It is based on observation, measurement, or test, and can be verified.

Occurrence report. A written evaluation of an event or condition that is prepared in sufficient detail to enable the reader to assess its significance, consequences, or implications and evaluate actions taken to correct the condition or to avoid recurrence.

Preventive action. Corrective Action(s) implemented that address correction of a root cause(s) attributed to a CAQ, which upon implementation, will prevent recurrence of the condition.

Remedial action. Corrective actions taken to resolve a specific condition.

Reportable occurrence. An event or condition, to be reported according to the criteria defined in DOE Order 231.1−1A, Change 2, Environmental, Safety, and Health Reporting Manual, and DOE M 232.2, Occurrence Reporting and Processing of Operational Information.

Significant Condition Adverse to Quality. A significant condition adverse to quality exists if:

A. The condition, if uncorrected, could have a serious impact on worker, public, environmental, radiological, or nuclear safety.

B. The condition, if uncorrected, could have a serious impact on operational reliability, TRU Waste Certification Program compliance, or mission performance.

C. Adverse conditions having programmatic or generic implications

D. Significant failure in worker safety and health requirements

E. Significant failure in QA program implementation

F. Pattern of a recurring CAQ such that the combined impact is indicative of a management or programmatic process breakdown.

Suspect/counterfeit item. An item is suspect when inspections or testing indicates that it may not conform to established Government or industry-accepted specification or national consensus standards or whose documentation, appearance, performance, material, or other characteristics may have been misrepresented by the supplier or manufacturer. A counterfeit item is one that has been copied or substituted without legal right or authority or whose material, performance, or characteristics have been misrepresented by the supplier or manufacturer. Items that do not conform to established requirements are not normally considered S/CIs if nonconformity results from one or more of the following conditions (which must be controlled by site procedures as nonconforming items):

A. Defects resulting from inadequate design or production quality control
B. Damage during shipping, handling, or storage
C. Improper installation
D. Deterioration during service
E. Degradation during removal
F. Failure resulting from aging or misapplication
G. Other controllable factors.

Stop Work Order. An action that causes work on a designated task or project to cease immediately upon notification (internal and external).

TrackWise. Issues management database, provides the capability to create different documents requiring unique information fields and different notifications for approval or action and creates unique tracking/trending records. Typical document types are as follows:

A. QA Program Nonconformance Reports (NCRs)
B. Corrective Action Reports (CARs)
C. Corrective Actions (CAs)
D. Management Assessment Reports (MARs)
E. Action Items (AIs)
F. Characterization NCRs.

5.0 REFERENCES

(1) 10 CFR 830, Subpart A, Quality Assurance Requirements

(2) DOE-CBFO-94-1012, Quality Assurance Program Document

(3) DOE M 231.1-1A, Chg. 2, Environment, Safety and Health Reporting Manual

(4) DOE M 232.2, Occurrence Reporting and Processing of Operations Information

(5) DOE O 227.1, Independent Oversight Program

(6) DOE O 226.1B, Implementation of Department of Energy Oversight, Contractor Requirements Document

(7) DOE O 414.1D, Quality Assurance, Contractor Requirements Document

(8) GDE-Q&SI-01, Causal Analysis Tree

(9) INST-RS&C-6.1.1, Radiological Surveillance

(10) MP-COPS-9.6, Occurrence Reporting

(11) MP-DOCS-18.2, Records Management

(12) MP-Q&SI-5.1, Investigation and Root Cause Analysis

(13) MP-Q&SI-5.2, DOE HSS OE Reporting

(14) MP-Q&SI-5.4, Identification of Nonconforming Conditions

(15) MP-Q&SI-5.10, Corrective Action Review Board Charter

(16) PD-Q&SI-01, Contractor Assurance Program Description

(17) QAPP-01, Quality Assurance Program Plan

(18) MP-SCTY-16.3, Information Security

6.0 RECORDS

Records generated by this procedure are classified in accordance with the table below, and dispositioned in accordance with MP-DOCS-18.2, Records Management.

Record Description	Classification
MP-Q&SI-5.3, Case file	Nonpermanent/QA WIPP / ENV1-J-1 / Submit to Records Management Center (RMC) for long-term storage. Destroy 10 years after submittal or transfer to the WIPP Records Archive Facility at end of project/program.
TrackWise data including verified CAQs, CAPs, objective evidence of corrective action closures, and verifications of corrective actions taken	Nonpermanent/QA WIPP / ENV2-a-1-a / Submit to RMC for long-term storage. Destroy 5 years after life of facility or transfer to WIPP Records Archive Facility or DOE-ID Records Storage Facility, as appropriate, at end of project/program.

7.0 EXHIBITS

None

8.0 APPENDICES

Appendix A – Using TrackWise to Initiate, Report, Document, and Communicate Conditions Adverse to Quality through Corrective Action Reports

Appendix A – Using TrackWise to Initiate Report, Document, and Communicate Conditions Adverse to Quality through Corrective Action Reports

NOTE: *In these instructions and in TrackWise, personnel who initiate a corrective action report (CAR) are referred to as originators. In these instructions, the individual who initially reviews and validates the CAR is the originator's supervisor or manager. In TrackWise, these individuals are referred to as the originator's supervisor. TrackWise will automatically notify an originator's supervisor or manager that a CAR has been initiated, requiring their review.*

1.0 Log on to TrackWise and Initiate a New Corrective Action Report

1.1 Users must have permission granted in TrackWise for access. User ID and password for TrackWise is the same as Windows User ID and password.

1.1.1 Contact QA TrackWise Administrator to obtain access to TrackWise.

1.2 Proceed to AMWTP web page and from the top menu bar select "Applications," then choose TrackWise. Enter user ID and password, and then click "Login." The TrackWise desktop page appears.

1.2.1 Ensure Windows domain selected is "AMWTP" for first-time login.

1.3 From the top menu bar listing File, New, View, Search, Queries, Scope and Help, select "Scope," and then choose "View/Change Scope" from the pull-down menu.

1.4 From pop-up screen, check the "AMWTP CAR-1," "Include in Scope," box located on right side of screen. Ensure that other boxes are unchecked.

1.5 Desktop page reappears.

1.6 From the menu bar listing New Doc, Query and Reports, select "New." (A "Create New Doc" screen page is displayed, ready for corrective action report data entry.)

2.0 Corrective Action Report – Initial Data Entry

2.1 Enter data in the following fields to "Initiate" a CAR.

2.2 **Title** – Provide a title descriptive of the condition adverse to quality (CAQ) identified, (e.g., "ORPS EM-ID--ITG-AMWTF-2012-0020 Unexpected Discovery of an Uncontrolled Hazardous Energy Source," "CBFO Audit A-05-012-WIPP Related NCRs for Electronic Notifications," or "MAR #13688-Respirator Issued w/o Proper Documentation"). For the purposes of cross-reference, enter applicable numbers from management or independent assessment, surveillance, ORPS-reportable occurrence, etc.

2.3 **Category** – From the drop-down menu, select the appropriate category to which the CAQ can be assigned.

2.4 **Originator** – The name of the individual logged onto TrackWise will appear automatically as the default CAR originator.

2.5 **Date Opened** – The date that the CAR was initiated is assigned by default.

2.6 **Source Type** – Use the pull-down menu to choose a "source type" that best fits the source that identified CAQ (e.g., CBFO-WIPP, DOE, DEQ, etc). This indicates the organization that identified the CAQ.

2.7 **Source Type Document** – If applicable, enter document number that identifies the "source" of the CAQ (e.g., surveillance number, management assessment number, etc.).

2.8 **Entity** – No data entry by the user is required. The identity of the organization associated with CAR originator will appear automatically as the default "entity."

2.9 **Requirement Violated –** Cite or quote the requirement that was violated to create the CAQ. Example: "MP-RS&C-6.1, Radiological Assessment Program, Rev. 2, Section 4.3.2 and INST-RS&C-6.1.1, Radiological Surveillances."

2.10 **Supporting Documentation –** Use this field to attach any data, reports, records, documents, letters, memos, standards, procedures, etc., that support a better understanding of the CAQ.

2.10.1 Use the "File," "Browse...," and then "Add" buttons, to attach one or more supporting documents. Click the "OK" button when finished.

2.10.2 Individual file size for attachment is limited to 10 MB.

2.11 **Finding Number** – If the CAQ was identified during an audit or assessment as a "Finding," specify the Finding numbers used, if any, to identify one or more "Findings."

2.12 **Description of CAR** – Describe the CAQ that violates the requirement. The CAR originator must describe the deficiency accurately, completely, and factually. If the "**Requirement Violated**" at 2.11 was only a citation of the requirement, e.g., "MP-RS&C-6.1, Rev. 2, Section 4.3.2," then describe the CAQ fully to provide reviewers a better understanding.

3.0 Save Data and Obtain A Corrective Action Report Number

3.1 After entering the CAQ data, from the top menu bar listing Save, Save +, Check Spelling, select and click on "Save."

NOTE: *The Save + function is disabled and not available to the user.*

3.2 TrackWise saves the CAQ data, assigns a CAR number, and returns the user to the TrackWise desktop page, where the CAR data is now displayed in a table as "Initiate" under the "Document Status" column.

4.0 Originator's Supervisor or Manager Evaluates, Validates, or Recommends for Cancel, Corrective Action Report and Selects a Responsible Manager

4.1 When a CAR is saved, TrackWise automatically notifies the originator's supervisor or manager by email that a CAR is ready for review.

4.2 Accessing the TrackWise CAR as above, the originator's supervisor or manger promptly reviews the CAR to determine if any immediate actions must be taken.

4.2.1 Immediate actions taken shall be documented in the CAR, as applicable.

4.3 If necessary, the originator's supervisor manager contacts the originator to obtain additional information prior to validating the CAR.

4.4 From the TrackWise data, the originator's supervisor or manager evaluates and validates, or recommends cancellation of the CAR.

4.5 If the originator's supervisor or manager does not concur with the CAR, he or she provides a written justification for cancellation in the "Description of CAR" field. At "Activity Type," select "Recommend Cancel," and then update the "Activity Summary" with the justification for cancellation. Select "Save." In TrackWise, the CAR "Document State" advances automatically to "QA Cancel Confirmation."

4.6 If the CAR is valid, the originator's supervisor or manager identifies the responsible manager who is responsible for the affected program, process, or system, and assumes responsibility for: (1) taking timely action to correct the CAQ; (2) determining the level of response and analysis required to correct the CAQ; and (3) managing the CAP to ensure closure.

4.7 If the originator's supervisor or manager concurs with the validity of the CAQ, in TrackWise at "Activity Type," select "Originator Supervisor's Approval," and finally "Save." In TrackWise, the "Document State" will advance to "QA Evaluation."

4.8 A CAR status remains at "Initiate" in TrackWise until validated or rejected by the originator's supervisor or manager, or until 7 calendar days have elapsed after initiation, at which time the CAR is advanced automatically to "QA Evaluation."

5.0 QA Manager Evaluation

5.1 Accessing the TrackWise CAR as above, the QA manager evaluates and validates or cancels each CAR reported in TrackWise. CARs recommended for cancellation by the originator's supervisor or manager will be reinstated by the QA manager, if determined to be a valid CAQ.

5.2 If a CAR was recommended for cancellation by the originator's supervisor or manager and the QA manager concurs with this determination, QA enters a brief justification statement for cancellation in the CAR and cancels the CAR.

5.3 If the QA manager determines that the CAR recommended for cancellation is valid; the QA manager enters a brief statement of justification and reinitiates the CAR. The TrackWise process continues at Step 4.0, Originator's Manager Evaluates, Validates, or Recommends for Cancellation, Corrective Action Report.

5.4 The QA manager continues the CAR evaluation process by entering data into the following fields.

5.5 **Is (the CAR) Valid** – Select either "Yes" or "No."

5.6 **Responsible Manager** – The QA manager confirms the selection of the responsible manager, or identifies another manager as the responsible manager, or identifies a responsible manager if the CAR was automatically advanced to QA Evaluation.

5.6.1 The name of the responsible manager identified by the originator's supervisor or manager will appear as the responsible manager. To identify another individual; high light and delete current individual then type last name of appropriate individual and select from the list provided.

5.7 **Significance** – From the pull-down menu, select YES if the identified condition is a Significance CAQ as per the DEFINITIONS in this procedure, or NO for other CAQs.

5.8 **Stop Work** – Does the CAQ warrant a Formal Stop Work Order? Select "Yes" or "No." If "No," proceed to the next item. If "Yes," the QA Manager notifies the Corrective Action Review Board according to MP-Q&SI-5.10, Corrective Action Review Board Charter. The CAR becomes the record of the Stop Work Order issuance.

5.9 **HSS-OE Applicable** – Is the CAQ HSS-OE "Applicable"? The QA Manager screens each CAR for HSS-OE applicability and reportability in accordance with MP-Q&SI-5.2, DOE HSS OE Reporting and selects "Yes" or "No" from the pull-down menu.

5.10 **HSS-OE Reportable** – Is the CAQ HSS-OE "Reportable"? Select either "Yes" or "No" from the pull-down menu.

5.11 **HSS-OE Applicable Standard and Criteria** – Select the HSS-OE standard(s) and applicable criteria associated with the condition.

5.12 **NTS Report Date** – For an HSS-OE "Reportable" occurrence, enter the date on which the occurrence was reported to DOE through the Noncompliance Tracking System.

5.13 **NTS Report No**. – As above, for a HSS-OE "Reportable" occurrence, enter the Noncompliance Tracking System report number.

5.14 **ORPS No.** – If the CAR was generated as a result of an ORPS-reportable occurrence, enter its number (e.g., ORPS EM-ID--ITG-AMWTF-2012-0020).

5.15 **ORPS Category –** Select the category assigned to the ORPS report from the pull-down menu.

5.16 **WIPP Submittal Required** – Is the CAQ WIPP–WAP, RCRA reportable? Select either "Yes" or "No" from the pull-down menu. Any WIPP-WAP, RCRA reportable CARs must be submitted to the CBFO by the SPM for tracking and closure.

5.17 **PO Number** – If the CAQ concerned a purchased item or service, identify the Purchase Order number used to procure the item or service.

5.18 **Responsible Department** – Use the pull-down menu to identify the AMWTP Department responsible for resolving the CAQ.

5.19 **Functional Area** – Use the pull-down menu to identify the AMWTP Functional Area responsible for resolving the CAQ.

5.20 **HSS-OE Screening** –Attach the HSS-OE Noncompliance Screening Form using the File Attachment Field.

5.22 **Disposition (Corrective Action Plan) Due Date** – The QA manager enters the date that the Corrective Action Plan is due, using the calendar function.

5.23 To complete the CAR evaluation, select "Activity Type," then "Valid," and then "Save." TrackWise will prompt for an e-signature and the Document State will advance to "Manager Disposition." If necessary, the QA manager shall escalate the level of management attention given to an identified adverse condition to assure that it is effectively resolved.

5.24 If the QA manager determines the CAR is not valid, select "Activity Type," then "Cancel," and then update the "Activity Summary," with justification and select "Save." TrackWise will prompt for e-signature and the Document State is advanced to "Closed-Cancelled."

6.0 Corrective Action Plan Input

6.1 When a CAR is validated by the QA manager, TrackWise automatically notifies the assigned responsible manager by email that a CAR is ready for corrective action planning.

6.2 Accessing the TrackWise CAR as above, the responsible manager evaluates the CAR, conducts an appropriate cause analysis, and submits a proposed CAP by the due date required.

6.3 Open the CAR. In the "Disposition Description or CAP," describe the action to be taken to disposition the CAQ.

6.4 The responsible manager completes the following TrackWise fields:

6.4.1 **(Corrective Action Plan Completion) Date Due –** The responsible manager enters the date due, which is 90 calendar days from the date of QA manager evaluation, or as approved by the QA manager. The date is selected using the Calendar function.

6.4.2 **Root Cause Analysis** – If a formal Root Cause Analysis is required or has been conducted. Answer "Yes," or "No."

6.4.3 **Level A, B, C Cause Codes** – From the pull-down menu, select the code that best represents the root cause of the CAQ.

6.4.4 **Contributing Cause Codes A, B, C** – If there were *contributing causes* (see def.) to the CAQ, select them from the choices available.

6.4.5 **Actionee**(s) – Identify one or more individuals responsible for conducting specific tasks to implement the CAP. If more than one actionee is identified, initiate and assign individual corrective actions (CAs). TrackWise will automatically notify each actionee identified.

6.4.5.1 Individual Child Corrective Actions are required for CAPs involving multiple corrective actions and actionees, and to establish interim completion dates.

6.4.5.2 While in the CAR record, select "Child" from the menu bar. A CA form will be initiated, and linked, to the CAR. Enter individual CA.

6.4.5.3 Child Corrective Actions must be scheduled and assigned in TrackWise prior to QA approval of the CAP.

6.5 The responsible manager selects "Activity Type," then "Submit Disposition," and then "Save," TrackWise will prompt for an e-signature.

7.0 QA Corrective Action Plan Review

7.1 QA reviews proposed CAP for concurrence.

7.2 From "Activity Type," QA user can accept the CAP by selecting "QA Approve disposition," or can return to the responsible manager for additional action by selecting "Add Disposition Required."

8.0 Input Completion Data

8.1 When actions identified in the Disposition Description or CAP are complete, including associated CAs, the responsible manager or actionee provides confirmation in the "Disp./CAP Action Complete" field.

8.3 Objective evidence documenting Corrective Plan completion shall be inserted in the TrackWise "Supporting Document Field," or referenced in the "Disp./CAP Action Complete" if readily accessible from EDMS, TRAIN etc.

8.4 Select "Activity Type," then "Action Complete," and "Save", TrackWise will prompt for e-signature and the Document State advances to "QA Verification."

8.5 To perform "Add'l Action Req'd," the responsible manager or actionee provides an update in the "Disp./CAP Action Complete" field, Select "Activity Type," then "Add'l Action Complete," then update the "Activity Summary" and then select "Save." TrackWise will prompt for e-signature and the Doc State will advance to "QA Verification."

9.0 Verify CAP Implementation and Close CAR

9.1 QA Department personnel verify completion of corrective actions for all CAQs.

9.2 QA Department personnel shall attach "Objective Evidence" file(s) or evidence of CAP completion in the "Supporting Documentation" field or by direct reference in the disposition.

9.3 If QA Department personnel determine that implementation of corrective action is incomplete, select "Activity Type," then "Additional Action Required," and then update "Activity Summary." Then select "Save." TrackWise will prompt for e-signature and the Document State will advance to "Awaiting Results-Add'l Action Req'd" and cycles through CAR verification process, starting at Step 8.5.

9.4 When QA Department personnel have verified completion of the corrective action and associated CAs, and completed review of applicable objective evidence, document closure comment in the "Disp./CAP Action Complete" field, select "Activity Type," "QA Verification Complete," update Activity Summary," and select "Save." TrackWise will prompt for e-signature and the Doc State will move to "Closed-Done."

Identification of Nonconforming Conditions

Advanced Mixed Waste Treatment Project

Approved:

(*Signature on file. See DCR-10708.*) 09/17/12

Angie Morse
Quality Assurance Engineer

Date

REVISION LOG

Revision Number	Date Approved	Pages Affected	Description of Revision
0	8/23/02	All	DCR-1008-Initial issue, this management procedure supersedes PQP 3.2 revision 0.
1	07/07/03	All	DCR-2281-Correct errors & update for accuracy and consistency with other Q&SI procedures.
2	09/15/03	Page 10, Section 5.3.1,3rd bullet	DCR-2664-Incorporate additional guidance per CBFO Audit A-03-05; CAR 03-075
3	10/27/03	All	DCR-2502-Insert page numbering to document and non-editorial format correction to section 5.1.
4	02/19/04	All	DCR-2367-Added clarification to the definition Level I Significance. Other clarification for closure activities.
5	04/20/04	New Sections 4.8, 4.9, 5.1, and various.	DCR-2875-Added one requirement from Appendix D of the HWMA/RCRA Implementing Matrix. Updated in response to CAR-4465 Corrective Actions. Added Appendix A instructions for TrackWise® queries.
6	07/14/04	All	DCR-3045-Revise to incorporate TrackWise® 6.0 upgraded. Incorporated changes to reflect the new Characterization NCR process.
7	08/10/04	Various	DCR-3229-Revised to incorporate CBFO review comments and made minor editorial/format changes.
8	04/08/05	Various	DCR-4038-Revised to incorporate TrackWise® process improvements. Editorial/format changes to comply with MP-DOCS-18.3. Incorporated CBFO comments on Rev 8A. Revised to implement corrective actions from CAR-7015, ORR Post-Start and process improvement from Management Assessment Report-12627. Added new Step 4.10. Added new Section 5.1, Roles and Responsibilities. Revised Section 5.5.1 to specify disposition response time and clarify disposition information.

Revision Number	Date Approved	Pages Affected	Description of Revision
9	08/24/05	Pg. 14, section 5.4.2	DCR-4512-Add Substep 5.4.2.1 for process improvement.
10	09/27/05	4.4.2	DCR-4575-Correct step numbering error. Minor change.
11	5/08/06	4	DCR-4841-Add two steps to close out CAR 20489, Action Item 20720.
12	06/20/2006	Cover Page	DCR-5048. Minor change to correct document title.
13	09/08/06	Pg. 1, Section 1.0 Pgs. 11, Section 3.5.1 Pg. 14, Section 3.8.1.2 Pgs 6 & 9, Sections 3.2.1.4 and 3.4.1 Various	DCR 5188, update Purpose & Scope for List B directives and address implementation issues identified during ISMS implementation verification. Implement corrective action for CAR 21973. Miscellaneous editorial corrections.
14	04/19/07	Various	DCR-5658. Updated roles and responsibilities to implement changes resulting from WIPP 311 Permit Modification. Revised document includes minor clarifications, and definition updates and editorial/formatting changes consistent with MP-DOCS-18.3, 18.4.
15	01/22/08	Various	DCR-6690. Clarifications added as required by CAR 34753; additional clarifications added for NCR tagging.

Revision Number	Date Approved	Pages Affected	Description of Revision
16	04/10/08	Various	DCR-6820. Added new step for notifying CBFO about results that are inconsistent with AK documentation. Corrected external requirements and deleted references of MP-TRUW-8.3 in support to transportation transition to CCP.
17	12/16/08	Various	DCR-7336. Revised steps as part of the implementation of new USQ process. Editorial changes per MP-DOCS-18.3, Developing Management Procedures.
18	05/27/10	Various	DCR-9191. Added new Section 3.12 to address process for Waste Programs evaluation and verification of container disposition as required in CAR 48277. Divided Section 3.10 into two sections (3.10 and 3.11) and added material to those sections. Updated characterization NCR process flow and incorporated flow chart as Exhibit 1 of procedure.
19	06/18/10	Page 13	DCR-9329. Revised Step 3.4.2 to address WIPP permit modification.
20	03/24/11	Various	DCR-9873. Periodic review and update. Reference Action Items 56147 and 58550.
21	09/17/12	All	DCR-10708. Incorporated ITG-BLUESHEET-244, and applied DOCS-BLUESHEET-08.

TABLE OF CONTENTS

1.0 PURPOSE/SCOPE 1

2.0 ROLES AND RESPONSIBILITIES 1

3.0 PROCEDURE 3

3.1 General Requirements 3

3.2 Initiation of QA Program Nonconformance Reports Using TrackWise 7

3.3 Approvals – QA Program NCRs 10

3.4 Quality Assurance Manager Evaluation 12

3.5 Disposition by Responsible Manager 14

3.6 QA Disposition Concurrence 17

3.7 Disposition/Corrective Action Plan (CAP) Action Complete 18

3.8 Quality Assurance Verification Complete 20

3.9 Initiation of Characterization NCRs Using TrackWise 21

3.10 Characterization NCR Remediation 23

3.11 Characterization NCR Remediation Complete 23

3.12 Waste Programs SPM Evaluation and Verification of Completed Approved Remediation 24

3.13 Characterization NCR QA Closure 25

3.14 NCR Tagging 26

4.0 DEFINITIONS 27

5.0 REFERENCES 30

6.0 RECORDS 31

7.0 EXHIBITS 31

Exhibit 1 – AMWTP Characterization NCR (RTR, HGAS, Assay, AK, CCP) Process Flow 32

8.0 APPENDICES 33

Appendix A – TrackWise Queries.....A1

Appendix B – Attaching Supporting Documentation.....B1

AMWTP MANAGEMENT PROCEDURE		
MP-Q&SI-5.4, Rev. 21	Issued: 09/17/12	Effective: 09/18/12

Identification of Nonconforming Conditions

1.0 PURPOSE/SCOPE

This procedure specifies implementing requirements for the identification, reporting, control, and disposition of materials, parts, components, *items* (see def.), services, processes and data which do not meet established requirements as specified in 10 CFR 830, Subpart A, Nuclear Safety Management, Quality Assurance Requirements; ANSI/ASME NQA-1-2008 Edition, Quality Assurance Requirements for Nuclear Facility Applications; DOE O 414.1C, Quality Assurance; DOE O 226.1A, Implementation of Department of Energy Oversight Policy, Attachment 2, Contractor Requirements Document; DOE/CBFO-94-1012, Quality Assurance Program Document; and QAPP-01, Quality Assurance Program Plan.

This procedure also implements requirements for controlling characterized waste containers that require additional *remediation* (see def.) to meet Waste Isolation Pilot Plant (WIPP) criteria for disposal; have been found to contain WIPP prohibited items; or for which the WIPP Waste Analysis Plan (WAP) Data Quality Objectives (DQOs) or Quality Assurance Objectives could not be achieved.

This procedure is applicable to all AMWTP personnel, subcontractors, and *suppliers* (see def.).

(10 CFR 830, Subpart A; DOE/CBFO-94-1012; MP-TRUW-8.1, MP-TRUW-8.2)

2.0 ROLES AND RESPONSIBILITIES

Performer	Responsibilities
Quality Assurance (QA) Manager or Designee	• Manages and administers *TrackWise* (see def.). • Performs independent verification of objective evidence for completed *corrective actions* (see def.). • Ensures external reporting requirements are completed. • Analyzes nonconformance report (NCR) data for adverse trend indicators. • Oversees the overall NCR process.
Responsible Managers or Designees	• Provide timely evaluation and disposition of nonconforming conditions. • Complete assigned corrective actions and generate the associated objective evidence.

Performer	Responsibilities
Site Project Manager (SPM)	• Oversees the Characterization, WIPP WAP, and WIPP-WAC related NCR process. • Identifies and tracks waste program related NCRs related to TRU Program Characterization activities and notifies the permittee, when applicable. • Notifies project personnel of the NCR. • Verifies completion of the corrective action for characterization NCRs. • Reviews and approves WIPP-related NCRs before submittal to the Carlsbad Field Office (CBFO).
QA Personnel	• Ensure that NCR Hold Tags (red) are attached to an item where installation or operation of that item could impact the safe operation of the facility and to prevent inadvertent use of the nonconforming item.
Supply Chain Inspectors	• Attach NCR Hold Tags (red) to any item rejected during the Supply Chain receiving inspection.

3.0 PROCEDURE

3.1 General Requirements

3.1.1 Material, components, equipment, data, and waste containers that do not conform to requirements shall be controlled to prevent their inadvertent use. Control is achieved through the identification, segregation, discrepancy reporting, and disposition of the *nonconforming condition* (see def.) by authorized individuals and confirmed through verification activities. When necessary, items may be conditionally released for use at risk, with appropriate justification, limitations, and appropriate approvals, for further processing or installation. In such cases, *conditional use* (see def.) shall include measures that clearly identify the items as nonconforming. Required corrective actions shall be completed prior to final acceptance of the item or subsequent unconditional operation.

3.1.2 NCRs shall be used to identify and describe discrepant items and provide documented, approved disposition and re-inspection requirements. Any individual(s) identifying a nonconforming condition shall initiate an NCR in TrackWise or notify their manager to ensure appropriate reporting is completed. The identification of authorized cognizant personnel is shown on the NCR electronically to register their actions or approvals of the disposition.

3.1.2.1 *QA Program NCRs* (see def.) (listed as AMWTP-1 NCR in TrackWise) are used to report nonconforming conditions that require technical and quality evaluation for disposition. QA Program NCRs will be assigned to the appropriate manager for disposition.

3.1.2.2 *Characterization NCRs* (see def.) (listed as AMWTP-3 NCR in TrackWise) have pre-approved dispositions for remediation of waste conditions. Characterization NCRs do not require additional management approvals.

3.1.3 "*Use-As-Is*" (see def.), "*Repair*" (see def.), or "Conditional Use" dispositions associated with facility configuration must be approved by the responsible manager and the QA manager and must include a technical justification. Any affected design documents must be identified for revision.

3.1.3.1 All "Use-As-Is," "Repair," or "Conditional Use" dispositions which propose a change to existing facility, system, equipment configuration, or operations processes must be evaluated through the *Unreviewed Safety Question* (USQ; see def.) process.

3.1.4 Requirements for Supplier Nonconformance reporting are identified in procurement documents, in accordance with MP-PCMT-15.1, Acquisition of Material and Services.

3.1.5 NCRs that identify defects or deficiencies affecting an item or service supplied, fit, or function to fulfill its intended safety function, or which could create a substantial safety hazard are evaluated for reportability and impact on safe operation of the AMWTP facilities.

3.1.6 QA personnel shall ensure for "repair" or "*rework*" (see def.) dispositions, that supplemental *inspections* (see def.) or verifications are performed to assure compliance with the NCR disposition.

3.1.7 TrackWise is the AMWTP Issues Management System that provides the ability to document the reporting, evaluation, approval, and verification of resolution of nonconforming conditions, and c*onditions adverse to quality* (CAQs; see def.).

3.1.8 The reliability and quality of data used for waste characterization is assured by compliance with the MP-TRUW-8.2, Quality Assurance Project Plan (QAPjP). Any items affecting the quality of data, as discussed in Section C3-13 of the QAPjP, if not readily resolved, are addressed as nonconforming conditions and documented on an NCR, or if a programmatic or recurring nature, on a Corrective Action Report (CAR) in accordance with MP-Q&SI-5.3, Corrective Action.

(AMWTP HWMA/RCRA Permit)

3.1.9 NCRs shall be initiated for any identified *Suspect/Counterfeit Item* (S/CI; see def.) to ensure proper evaluation and disposition.

3.1.9.1 MP-Q&SI-5.3 provides direction for additional reporting requirements for any identified S/CIs.

3.1.10 Nonconforming conditions identified during characterization, validation, reconciliation, and certification under the AMWTP TRU Program that do not meet the requirements of the WIPP WAP or WIPP Waste Acceptance Criteria (WAC) shall be documented in TrackWise in accordance with this procedure and/or MP-Q&SI-5.3.

3.1.10.1 NCRs will remain open pending final disposition of nonconforming data or removal/remediation of prohibited items.

3.1.10.2 NCRs shall be generated on a container basis. If the nonconforming condition affects the entire Batch Data Report, the condition shall be reported as a QA Program NCR using the AMWTP-1 NCR.

3.1.10.3 Waste conditions that do not meet WIPP criteria for disposal and have pre-approved dispositions for remediation are reported on Characterization NCRs as described in Section 3.9 of this procedure.

3.1.10.4 The initiator of the NCR is responsible to accurately identify the affected container number, Batch Data Report number, and problem description in the NCR.

3.1.10.5 All WIPP-data-related NCRs will be distributed to the Site Project Office for inclusion into the container files.

3.1.10.6 All NCRs shall be referenced or included in the affected Batch Data Reports.

(MP-TRUW-8.2)

3.1.11 Documentation for a WIPP TRU Program nonconformance is reported and tracked in TrackWise and made available to the SPM.

3.1.11.1 The SPM is responsible for identifying and tracking all WIPP related NCRs and notifying CBFO when required.

3.1.11.2 The SPM is also responsible for notifying project personnel, as appropriate, of nonconforming conditions and verifying completion of corrective actions for NCRs.

(MP-TRUW-8.2)

3.1.12 Open NCRs issued for mixed waste, including TRU, must be resolved and closed prior to AMWTP either shipping the waste to a disposal facility or transferring the waste to another organization.

3.1.13 NCRs for other than TRU waste to be transferred by AMWTP to another organization must be reviewed with the receiving organization to assure the waste characterization is within the scope of their waste management plan or QAPjP prior to closure of the NCR. In any case the NCR must be closed prior to waste transfer.

NOTE 1: *Supporting documentation in the form of an electronic file up to 10 megabytes in size may be attached to an NCR. Supporting documentation may be attached at any stage of processing the NCR. Appendix B, Attaching Supporting Documentation, of this procedure provides guidelines on how to attach supporting documentation.*

NOTE 2: *Upon initiation of an NCR in TrackWise, all changes/activity summaries/entries for the subject NCR are recorded in TrackWise and can be viewed by using the "History" function on the DeskTop.*

NOTE 3: *Appendix A, TrackWise Queries, provides guidance on the use of TrackWise for NCR reporting and processing.*

3.2 Initiation of QA Program Nonconformance Reports Using TrackWise

NOTE 1: *All nonconforming conditions for which AMWTP is responsible to control, disposition and resolve are to be documented using the appropriate NCR process in TrackWise.*

NOTE 2: *Any individual may initiate NCRs, including AMWTP employees, subcontractors, or supplier/vendor, upon identification of nonconforming items, material, or component. All NCRs initiated by AMWTP employees and subcontractors are initiated using the TrackWise database.*

NOTE 3: *Suppliers' requirements for generation of NCRs are addressed in MP-PCMT-15.1, and invoked through specific contract documents and submittal clauses.*

(AMWTP HWMA/RCRA Permit; 10 CFR 830, Subpart A)

3.2.1 To initiate a QA Program NCR in TrackWise, log into TrackWise and ensure scope is set for "AMWTP-1 NCR."

NOTE: *Completing Step 3.2.1.1 will place the user in the NCR report form.*

3.2.1.1 From the TrackWise Desktop Screen, select "new" to create a new document, and select "AMWTP-1 NCR" and "Continue."

3.2.1.2 Enter the appropriate information in the "Initial NCR Fields" section of the form.

3.2.1.2.1 For NCRs affecting WIPP data, enter all relevant information to ensure data quality issues are identified and tracked.

NOTE: *The required fields are string fields (initiator enters specific information) and selection fields (initiator selects the appropriate information). These fields are listed from left to right as they appear on the screen.*

3.2.1.3 Complete the following required fields:

- Affected Item
- Affected Item Type
- Category (hardware, software, WIPP Data, other)
- Title
- Source Type
- Requirement Violated
- Description of Condition (the initiator must provide a complete description of the condition being reported).

3.2.1.4 If a container is affected, then enter the container identification number into the Container ID field to ensure proper tracking and management of the affected container.

3.2.1.5 Ensure the following additional fields are completed for NCRs associated with WIPP Batch Data, Containers, Shipments, Payloads or specific equipment identifiers:

- Characterization Batch #
- Container ID (For Batch Data Quality conditions, **all** affected container numbers shall be entered by the originator using only numerical characters. This field will accommodate up to twenty container identifiers. Multiple container numbers shall be entered in the following format with a comma and space separating each entry: 12345678, 12345678.)
- Equipment ID

- Shipment ID
- Payload ID.

NOTE 1: *The "Save+" functionality has been disabled for AMWTP and is not in use.*

NOTE 2: *After Step 3.2.1.6 is completed, TrackWise will automatically assign the NCR number and return the user to the Desktop Screen, and notify the user's manager for review and concurrence.*

3.2.1.6 Upon completion of data entry, select "Save."

NOTE: *Measures to segregate, control, and prevent inadvertent installations or use of nonconforming items pending evaluation and approval of the disposition are specified in Section 3.14 of this procedure*.

3.2.1.7 After completing the "Save" in Step 3.2.1.6, open the NCR respond to the "tags applied?" question, enter the number of NCR tags applied, Save and Exit.

3.2.1.7.1 Document the NCR number and information on the NCR tag(s).

3.2.1.7.2 If the nonconforming condition affects characterization or certification data impacting the acceptability of waste containers for shipment or disposal, tagging or physical segregation is required in addition to administrative controls.

3.2.1.7.2.1 Ensure the waste container identification is accurately reported and documented on the NCR and the NCR tag.

3.2.1.7.3 Place the NCR tag on the affected waste container.

3.2.1.7.4 If the container is not readily accessible for placement of the NCR tag, notify the SS for coordination with Production Planning.

3.3 Approvals – QA Program NCRs

NOTE: *QA Program NCR status will remain "Initiate" until reviewed by the originator's manager, or until 7 calendar days have elapsed, at which time the NCR is advanced automatically to QA evaluation.*

3.3.1 Responsible Manager: Perform a review to evaluate the nonconforming condition, and determine any immediate actions.

3.3.1.1 Notify the originator (i.e., e-mail, telephone, or TrackWise notification) if additional information (i.e., additional description, correct format of container ID, additional actions, etc.) is required prior to performing "Original Supervisor's Approval."

3.3.1.2 If the condition is valid, then perform the following:

3.3.1.2.1 Select "Activity Type."

NOTE: *After Step 3.3.1.2.2 is completed, TrackWise will prompt the manager for e-signature, and* Doc State *(see def.) will advance to "QA Evaluation."*

3.3.1.2.2 Select "Original Supervisors Approval."

3.3.1.3 If the condition reported on the NCR is not a valid nonconforming condition, then perform the following:

3.3.1.3.1 Provide a written justification for cancellation in the "Condition Description" field,

3.3.1.3.2 Select: "Activity Type," "Recommend Cancel."

3.3.1.3.3 Update the "Activity Summary."

NOTE: *After Step 3.3.1.3.4 is completed, TrackWise Doc State will advance to "QA Cancel Confirmation."*

3.3.1.3.4 Select "Save."

3.3.1.4 QA Manager: Review the NCR for concurrence to cancel.

3.3.1.4.1 If the NCR is to be cancelled, then select "Activity Type," then "Cancel."

NOTE: *After Step 3.3.1.4.2 is completed, TrackWise will prompt for e signature, and the Doc State will advance to "Closed-Cancelled."*

3.3.1.4.2 Update the "Activity Summary" and select "Save."

3.3.1.4.3 QA Manager: If the NCR is valid, then perform the following:

3.3.1.4.3.1 Communicate the basis for reinstatement of the NCR with the responsible manager.

3.3.1.4.3.2 Enter a brief statement of justification.

3.3.1.4.3.3 Select "Activity Type," "Reinitiate."

NOTE: *After Step 3.3.1.4.3.4 is completed, TrackWise will prompt for e-signature, and the Doc State will change back to "Initiate" and continue the process starting with Step 3.3.1.*

3.3.1.4.3.4 Update the "Activity Summary" and select "Save."

3.4 Quality Assurance Manager Evaluation

3.4.1 QA Manager: Evaluate the NCR record and provide response to the following required fields:

- Is it valid
- Responsible Manager
- *Stop Work Order* (see def.)
- Health, Safety, and Security Office of Enforcement (HSS-OE) applicable
- HSS-OE applicable standard
- HSS-OE reportable (see MP-Q&SI-5.2, DOE HSS-OE Reporting)
- Determine if a CAR is warranted. (Nonconformance caused by systemic deficiencies or programmatic failures shall also be reported in accordance with MP-Q&SI-5.3.)
- Corrective actions for minor procedure violations that are not programmatic in nature can be addressed in the corrective action of the nonconformance
- Perform an HSS-OE Applicability screen
- Review the Source Type and; if applicable, the Source Type Document Number
- Quality (Type Material)
- Responsible Department
- WIPP Submittal Req'd
- Disposition Due Date.

3.4.1.1 QA Manager: Complete the evaluation of the record.

NOTE: *After Step 3.4.1.2 is completed, TrackWise will prompt for e-signature, and the Doc State will advance to "Manager Disposition."*

3.4.1.2 Select "Activity Type," "Valid," and "Save."

3.4.1.3 QA Manager: If the record is not valid, then perform the following:

3.4.1.3.1 Select: "Activity Type," "Cancel."

3.4.1.3.2 Update the "Activity Summary."

NOTE: *After Step 3.4.1.3.3 is completed, TrackWise will prompt for e-signature, and the Doc State will advance to "Closed-Cancelled."*

3.4.1.3.3 Select "Save."

3.4.1.3.4 If an NCR involves Nevada National Security Site (NNSS) data, then notify the NNSS Waste Certification Official (WCO) at AMWTP via TrackWise for NCR evaluation and determination of impacts to NNSS Certification Program.

3.4.2 SPM: For WIPP related NCRs, notify the Carlsbad Field Office (CBFO) in writing within 7 calendar days of identification of any non-administrative nonconformance (i.e., failure to meet a DQO) that has been first identified at the SPM level.

NOTE: *Notification to CBFO is required, if the sampling and analysis results are inconsistent with AK documentation.*

3.4.2.1 Submit the nonconformance report to CBFO within 30 calendar days of identification of the condition.

3.4.2.2 Implement a corrective action process and resolve the NCR prior to any affected data being used to certify waste for shipment.

(MP-TRUW-8.1; MP-TRUW-8.2)

3.4.2.3 Monitor TrackWise for initiated NCRs for CBFO notification. This monitoring can be completed using the TrackWise query function.

3.4.3 Submit electronic notifications to CBFO as follows:

3.4.3.1 Transmit e-mail with the subject line annotated **[NCR]** to ensure automatic transfer into the proper folder of the receiving system.

3.4.3.2 Submit notifications to the following e-mail address, wipp.notify@wipp.ws.

3.4.4 If electronic submittal is unavailable, then utilize hard copy transmittals by sending correspondence via FedEx to the following addresses:

U.S. Department of Energy Carlsbad Field Office
4021 National Parks Hwy
Carlsbad, New Mexico 88220
Attn: Quality Assurance Manager

Washington TRU Solutions
P.O. Box 2078
Carlsbad, New Mexico 88221-2078
Attn: Parrish Roush M/S 486-06

3.5 Disposition by Responsible Manager

NOTE 1: *Dispositions associated with "Use-As-Is," "Repair," and "Conditional Use" which propose a change to existing facility, system, equipment configurations, or operating processes will have a USQ review performed in accordance with MP-NSPC-3.2, Unreviewed Safety Question Process, as delineated in Step 3.5.1.3.*

NOTE 2: *Action Items (AIs) may be used to manage NCR dispositions with multiple actions and actionees.*

NOTE 3: *Action Items are not used to document the evaluation of nonconforming conditions.*

NOTE 4: *When Actionee has been assigned, TrackWise will automatically send notification to the Actionee.*

3.5.1 Responsible Manager: Review the NCR record, research appropriately and submit a proposed disposition in a timely manner.

3.5.1.1 Select Recommended Disposition categories from the TrackWise pull down menu.

3.5.1.2 Document the disposition and technical justification in the "Disposition Description/CAP" field of the NCR as described in Step 3.5.1.3.

- Repair – Restores safe functionality but does not conform to original design
- Rework – Restores item to original design
- Use-As-Is
- Reject/scrap
- Return to supplier
- Conditional use – Yes or No (Select from drop-down menu)
- If "Yes" is selected for Conditional Use, provide expiration date in "Conditional Use Expiration Date" field
- USQ review required – Yes or No (Required for "Use-As-Is," "Repair," or "Conditional Use" dispositions)
- If "Yes" is selected for USQ review required, provide USQ review number(s) in "USQ review Number(s)" field.

3.5.1.3 Responsible Manager: Provide technical justification for the proposed dispositions of:

- Use-As-Is
- Repair
- Conditional Use – the conditions and limitations shall be identified in addition to the justification for approval of conditional use.

3.5.1.3.1 Evaluate "Use-As-Is," "Repair," or "Conditional Use" dispositions which propose a change to established design criteria for existing facility, system, equipment configuration, or operation processes in accordance with MP-NSPC-3.2.

3.5.1.3.2 Forward requests to a qualified USQ evaluator for evaluation of impact on the safety basis.

3.5.1.4 Responsible Manager: Provide the information in the following required fields:

- Cause Code
- Actionee(s)
- If more than one Actionee is responsible, individual AIs may be initiated
- All AIs must be completed and closed before the NCR can be submitted for closure
- Due Date.

3.5.1.5 Identify any affected design documents requiring as-built drawings; and create/develop AIs in TrackWise, as appropriate.

3.5.1.6 Complete the "Disposition Description/CAP" field of the NCR for all actions necessary to resolve the nonconformance.

NOTE: *After Step 3.5.1.7 is completed, TrackWise will prompt for e-signature, and the Doc State will advance to "QA Disposition Concurrence."*

3.5.1.7 Select "Activity Type," "Submit Disposition," and "Save."

3.6 QA Disposition Concurrence

3.6.1 QA Manager: Review and approve the NCR dispositions and justification.

3.6.1.1 If additional disposition or justification is required, select the following:

3.6.1.1.1 Select "Activity Type."

3.6.1.1.2 Select "Addt'l Disposition Required."

NOTE: *After Step 3.6.1.1.3 is completed, TrackWise will prompt for e-signature and the Doc State will advance to "Manager Add'l Disposition.*"

3.6.1.1.3 Update the "Activity Summary" and select "Save."

3.6.1.1.4 Responsible Manager: Perform the following:

3.6.1.1.4.1 Provide the additional requested disposition information in the "Disposition Description/CAP" field.

3.6.1.1.4.2 Select: "Activity Type," "Submit Add'l Disposition."

NOTE: *After Step 3.6.1.1.4.3 is completed, TrackWise will prompt for e-signature, and the Doc State will advance to "QA Disposition Concurrence."*

3.6.1.1.4.3 Update the "Activity Summary," and select "Save."

3.6.1.2 QA Manager: If the Disposition/CAP is acceptable, then:

3.6.1.2.1 Select "Activity Type."

NOTE: *After Step 3.6.1.2.2 is completed, TrackWise will prompt for e-signature, and the Doc State will advance to "Awaiting Results." TrackWise will also automatically notify the Actionee and Responsible Manager for action completion of disposition details.*

3.6.1.2.2 Select "QA Approve Disposition," and "Save."

3.6.1.3 Responsible Manager and QA Manager: Approve all items/processes proposed for Conditional Use.

3.6.1.4 QA Manager: Ensure that conditional use items/processes are tagged to indicate the expiration and limitations of the conditional use.

3.6.1.5 Resubmit, review, and approve any changes to the approved disposition actions as described in Step 3.6.1.1.

3.7 Disposition/Corrective Action Plan (CAP) Action Complete

3.7.1 Responsible Manager/Actionee: When all actions identified in the Disposition Description/CAP are complete, including any associated AIs, then provide confirmation in the "Disp./CAP Action Complete" field.

NOTE: *After Step 3.7.1.1 is completed, TrackWise will prompt for e-signature, and the Doc State will advance to "QA Verification."*

3.7.1.1 Select: "Activity Type," "Action Complete," and "Save."

3.7.1.2 Perform "Add'l Action Req'd," by performing the following:

3.7.1.2.1 Provide an update in the "Disp./CAP Action Complete" field.

3.7.1.2.2 Select: "Activity Type," "Add'l Action Complete."

NOTE: *After Step 3.7.1.2.3 is completed, TrackWise will prompt for e-signature, and the Doc State will advance to "QA Verification."*

3.7.1.2.3 Update "Activity Summary," and select "Save."

3.7.1.3 Any changes to the approved disposition actions must be resubmitted, reviewed, and approved as described in Step 3.6.1.1.

3.7.2 Site Project Manager:

NOTE: *After Step 3.7.2.1 is completed, TrackWise will prompt for e-signature, and the Doc State will advance to "QA Verification.*"

3.7.2.1 When all actions are complete for TRU Characterization Activity NCRs, then verify completion of actions identified in the Disposition Description/CAP field, and provide confirmation.

3.7.2.2 Perform the following for "Add'l Action Req'd":

3.7.2.2.1 Provide an update in the "Disp./CAP Action Complete" field.

3.7.2.2.2 Select: "Activity Type," "Add'l Action Complete."

NOTE: *After Step 3.7.2.2.3 is completed, TrackWise will prompt for e-signature, and the Doc State will advance to "QA Verification."*

3.7.2.2.3 Update "Activity Summary," and select "Save."

3.8 Quality Assurance Verification Complete

3.8.1 Responsible Manager: Notify the QA Manager that the NCR record and all associated AIs are complete.

3.8.2 QA Manager: Verify completion of required disposition to ensure acceptable completion of the disposition and documentation of actions taken.

3.8.2.1 If QA determines that additional corrective action is required, then perform the following:

3.8.2.1.1 Select: "Activity Type," "Add Action Required."

NOTE: *After Step 3.8.2.1.2 is completed, TrackWise will prompt for e-signature, and the Doc State will advance to "Awaiting Results-Add'l Action Req'd" and continue through the process as identified in Section 3.7.*

3.8.2.1.2 Update "Activity Summary," and select "Save."

3.8.3 When QA verifies the disposition and AIs, as applicable, and all associated documents are complete, then enter a closure comment in the "Disp./CAP Action Complete" text field.

3.8.3.1 Objective evidence file(s) may be attached electronically in the "supporting documentation" field (see Appendix B) or by direct reference in the disposition closure statement.

NOTE: *After Step 3.8.3.2 is completed, TrackWise will prompt for e-signature, and the Doc State will advance to "Closed-Done."*

3.8.3.2 Select "Activity Type," "QA Verification Complete," update "Activity Summary," and select "Save."

3.9 Initiation of Characterization NCRs Using TrackWise

3.9.1 User: Initiate a Characterization NCR in TrackWise.

3.9.1.1 Log into TrackWise and from the Desktop menu, select "Scope."

NOTE: *Selecting "View/Change Scope," will allow the user to select the appropriate database for NCR generation.*

3.9.1.2 Select "View/Change Scope."

3.9.2 Ensure that the scope is set for AMWTP-3 NCR and select the appropriate affected characterization process.

NOTE 1: *The "Save+" functionality has been disabled for AMWTP and is not in use.*

NOTE 2: *After "Save and Exit" are selected, TrackWise will return the user to the TrackWise desktop.*

3.9.3 Ensure that no other selections are checked, then "Save and Exit."

NOTE: *Selecting "New" on Desktop will place the user into the Characterization NCR report form.*

3.9.4 Select "New" from the Desktop to initiate the NCR.

3.9.5 Enter the appropriate information in the "Initial NCR Fields" section of the form.

3.9.5.1 For NCRs affecting WIPP data, enter all relevant information to ensure the waste container and characterization issues are accurately identified and tracked.

3.9.5.1.1 Ensure the following required fields are completed:

- Batch ID
- Container ID – only numeric characters can be entered

- Characterization Problem – select from pre-established conditions list from pull down menu).

NOTE: *Waste containers with nonconforming conditions affecting characterization or certification data impacting acceptability for shipment or disposal require physical segregation or tagging in addition to administrative controls.*

3.9.6 Select "Save" from the NCR report menu, which will take the user back to the Desktop and assign a unique number to the NCR.

3.9.7 Document the NCR number and information on the NCR tag.

3.9.7.1 Ensure the waste container identification is accurately reported and documented on the NCR and the NCR tag.

3.9.7.2 Place the NCR tag on the affected waste container.

3.9.7.3 If the container is not readily accessible for placement of the NCR tag, notify the SS for coordination with Production Planning.

NOTE: *Entering the NCR report is necessary to electronically sign the NCR.*

3.9.8 From the Desktop, enter the NCR report by clicking on the NCR number.

3.9.8.1 Ensure the required field "Tag Applied" is completed.

NOTE: *After Step 3.9.8.2 is completed, TrackWise will prompt for e-signature, and the Doc State will advance to "Awaiting Results."*

3.9.8.2 Select "Activity Type," select "Originator's Signature," and select "Save."

3.10 Characterization NCR Remediation

NOTE: *Applicable information may be added to a Type-3 Characterization NCR by any AMWTP personnel (characterization, validation, 200% review, SME, AK, reconciliation, etc.) involved in the processing or review of data associated with the container identified in the nonconformance.*

3.10.1 Select the appropriate Characterization NCR from TrackWise.

3.10.2 From the desktop, enter the NCR report by clicking on the NCR number.

3.10.3 Ensure correct selection from "Approved Remediation" drop down menu is identified.

3.10.4 Enter activity comments for Production Status in the "Comments" field of the NCR.

3.10.4.1 Select "Save."

3.11 Characterization NCR Remediation Complete

NOTE: *Applicable information may be added to a Type-3 Characterization NCR by any AMWTP personnel (characterization, validation, 200% review, SME, AK, reconciliation, etc.) involved in the processing or review of data associated with the container identified in the nonconformance.*

3.11.1 Select the appropriate Characterization NCR from TrackWise.

3.11.1.1 From the desktop, enter the NCR report by clicking on the NCR number.

3.11.1.2 Verify identified Approved Remediation is correct.

3.11.1.3 Select "Activity Type" and "Work Complete."

NOTE: *After Step 3.11.1.4 is completed, TrackWise will prompt for e-signature, and the Doc State will advance to "SPM Verification."*

3.11.1.4 Select "Save."

3.12 Waste Programs SPM Evaluation and Verification of Completed Approved Remediation

3.12.1 SPM: Access the NCR information in TrackWise and verify the appropriate container information in the NCR.

3.12.2 SPM: Ensure the selected remediation is appropriate.

3.12.2.1 If the identified remediation is incorrect, select correct remediation from the "Approved Remediation" drop down selection in TrackWise.

NOTE: *When Step 3.12.2.2 is complete, final evaluation and verification will be performed in conjunction withMP-LLW-19.7, Low Level Waste/Mixed Low Level Waste Verification, with closure performed in accordance with this procedure.*

3.12.2.2 If NCR is associated with a MLLW/LLW container, select "Approved MLLW/LLW TSDF" as the approved remediation and notify appropriate MLLW/LLW personnel.

NOTE: *After Step 3.12.2.2.1 is completed, TrackWise will prompt for e-signature, and the Doc State will advance to "MLLW/LLW Verification."*

3.12.2.2.1 Select "Activity Type," "Transfer to MLLW/LLW," and "Save."

3.12.3 SPM: Upon confirmation that remediation is accurate and information in NCR is adequate and appropriate supporting documentation, when applicable, has been included; enter final SPM verification statement for completion of identified remediation.

NOTE: *After Step 3.12.3.1 is completed, TrackWise will prompt for e-signature, and the Doc State will advance to "QA Closure."*

3.12.3.1 Select "Activity Type," "Waste Programs Evaluation," and "Save."

3.12.4 MLLW/LLW: Upon confirmation that remediation is accurate and information in NCR is adequate and appropriate supporting documentation, when applicable, has been included; enter final MLLW/LLW verification statement for completion of identified remediation.

NOTE: *After Step 3.12.4.1 is completed, TrackWise will prompt for e-signature, and the Doc State will advance to "QA Closure."*

3.12.4.1 Select "Activity Type," "MLLW/LLW Verification," and "Save."

3.13 Characterization NCR QA Closure

3.13.1 Quality Assurance Personnel: After appropriate remediation is complete and verified by SPM or MLLW/LLW personnel, verify Characterization NCRs for closure by checking the following items:

- Remediation selected is accurate.
- Remediation action is complete.
- Appropriate SPM or MLLW/LLW final verification statement has been entered.
- Appropriate supporting documentation is attached and complete.

NOTE: *If the NCR is rejected, the Doc State will return to SPM Verification.*

3.13.1.1 If the above items are not met, reject the NCR.

3.13.1.2 If the above items are met, from the desktop, enter the NCR report by clicking on the NCR number.

3.13.1.3 Enter verification comments for QA closure in the "Recommended Actions" field of the NCR.

3.13.1.4 Select "Activity Type" and "QA Verify Complete."

NOTE: *After Step 3.13.1.5 is completed, TrackWise will prompt for e-signature, and the Doc State will advance to "Closed-Done."*

3.13.1.5 Update "Activity Summary" and select "Save."

3.14 NCR Tagging

3.14.1 When an item is identified as being nonconforming, or will result in a nonconforming condition, a process to provide control of the nonconforming item through physical identification or an alternate administrative control is required.

3.14.2 Where physical tagging of nonconforming items is not practical, (i.e., in a radiation area, painted surfaces, conditions involving numerous items, installed items that are not accessible, installed software, etc.), use the following alternate means of identification:

A. NCRs associated with facility operations systems may be tracked via the operations status board and reviewed during shift turnover.

B. NCRs associated with numerous items will be identified by equipment/part numbers included on a list attached to the NCR as supporting documentation in TrackWise.

C. Nonconforming conditions affecting characterization or certification data impacting the acceptability of waste containers for shipment or disposal require tagging or physical segregation in addition to administrative control through TrackWise.

3.14.3 QA Personnel: Ensure that NCR Hold Tags (red) are attached to an item where installation or operation of that item could impact the safe operation of the facility and to prevent inadvertent use of the nonconforming item, except where noted in Item B and Step 3.14.4.

A. QA is responsible for removal and destruction of NCR Hold Tags (red) upon closure verification of NCR dispositions, except where noted in Step 3.14.4.2.

B. Operations personnel are authorized to remove and destroy NCR hold tags from waste containers after verification in TrackWise that the NCR has been closed by QA.

3.14.4 Supply Chain Inspector: Attach NCR Hold Tags (red) to any item rejected during the Supply Chain receiving inspection in accordance with MP-PCMT-15.21, Materials Management.

3.14.4.1 Use segregation areas for nonconforming items when a large lot or quantities of items are affected.

3.14.4.2 Remove and destroy NCR Hold Tags (red) from received items following QA Verification and closure of the associated NCR.

3.14.5 Attach NCR Conditional Release tags to an item where installation or operation has been reviewed and a technical justification developed that supports Conditional Use for installation and/or safe operation pending final NCR disposition and resolution, as provided in Section 3.5.

3.14.5.1 Remove NCR Hold Tags upon placement of an NCR Conditional Release Tag based on an approved disposition on the NCR.

4.0 DEFINITIONS

Case file. A packet that contains information about each revision to a document with the information increasing as the document advances through the development process.

Characterization NCRs. NCRs used to report and control characterized waste container conditions which require additional remediation to meet WIPP WAP and WAC criteria for disposal. Remediation can include removal of WIPP prohibited items or re-characterization in order to achieve the WIPP Data Quality Objectives. Characterization NCRs do not require Quality or Technical evaluations and are not used to report QA Program issues.

Corrective action. Measures taken to correct conditions adverse to quality and, where necessary, to preclude recurrence.

Condition adverse to quality. An all-inclusive term used in reference to any of the following: failures, malfunctions, deficiencies, defective items, and nonconforming conditions.

Conditional use. A controlled, documented, and approved release of a nonconforming item or process for limited use (pending nonconformance disposition) to permit continuation of construction, installation, maintenance, or modification where scheduled delay has been determined to be critical impact to the facility or project. Conditional use must include:

- Technical justification
- Limits of use
- Expiration date
- Approvals.

Doc State. TrackWise terminology for status of record. The Doc State describes where the record is currently in the overall workflow process.

Inspection. A phase of quality control, which by means of examination, observation, or measurement determines the conformance of materials, supplies, parts, components, appurtenances, systems, processes, or structures to predetermined quality requirements.

Item. An all-inclusive term used in place of any of the following: appurtenance, assembly, component, equipment, material, module, part, structure, sub-assembly, subsystem, system or unit.

Nonconforming condition. A deficiency in characteristic, documentation, or procedure that renders the quality of an item, material, or product unacceptable or indeterminate.

QA Program NCRs. Document utilized for adverse conditions that require technical and QA evaluation to identify appropriate corrective actions. Equipment problems or QC failures, which can potentially impact safe operations or characterization data quality are examples of conditions reported using QA Program NCRs.

Remediation. Preapproved process used to characterize or treat waste containers in order to meet WIPP Data Quality Objectives or to remove a WIPP prohibited item.

Repair. The process of restoring a nonconforming characteristic to a condition such that the capability of an item to function reliably and safety is unimpaired, even though that item still does not conform to original design.

Rework. The process by which, an item is made to conform to original design requirements by completion or correction.

Significant Condition Adverse to Quality. A significant condition adverse to quality exists if:

A. The condition, if uncorrected, could have a serious impact on worker, public, environmental, radiological or nuclear safety.

B. The condition, if uncorrected, could have a serious impact on operational reliability, TRU Waste Certification, or mission performance.

C. Condition where regulatory compliance demonstration is affected, requiring notification to the regulatory entities.

D. Adverse conditions having programmatic or generic implications.

E. Significant failure in worker safety and health requirements.

F. Significant failure in QA program implementation.

G. Pattern of a recurring CAQ such that the combined impact is indicative of a management or programmatic process breakdown.

Stop Work Order. An action that causes work on a designated task or project to cease immediately upon notification (internal and external).

Supplier. Any individual or organization, that furnishes items or services in accordance with a procurement document. An all-inclusive term used in place of any of the following: vendor, seller, contractor, subcontractor, fabricator, consultant, and their sub-tier levels.

Suspect/counterfeit items. An item is suspect when inspections or testing indicates that it may not conform to established Government or industry-accepted specification or national consensus standards or whose documentation, appearance, performance, material, or other characteristics may have been misrepresented by the supplier or manufacturer. A counterfeit item is one that has been copied or substituted without legal right or authority or whose material, performance, or characteristics have been misrepresented by the supplier or manufacturer. Items that do not conform to established requirements are not normally considered S/CIs if nonconformity results from one or more of the following conditions (which must be controlled by site procedures as nonconforming items):

- Defects resulting from inadequate design or production quality control
- Damage during shipping, handling, or storage
- Improper installation

- Deterioration during service
- Degradation during removal
- Failure resulting from aging or misapplication
- Other controllable factors.

TrackWise. Issues management database that provides the capability to create different documents requiring unique information fields and different notifications for approval or action and creates unique tracking/trending records. Typical document types are as follows:

- QA Program NCRs
- CARs
- Management assessment reports
- AIs
- Characterization NCRs
- QA surveillance reports.

Use-As-Is. A disposition permitted for a nonconforming item when it can be established that the item is satisfactory for its intended use. Justification for the disposition must be documented.

Unreviewed safety question. A situation where (1) The probability of occurrence or the consequences of an accident or the malfunction of equipment important to safety previously evaluated in the documented safety analysis could be increased; (2) The possibility of an accident or malfunction of a different type than any evaluated previously in the documented safety analysis could be created; (3) A margin of safety could be reduced; or (4) The documented safety analysis may not be bounding or may be otherwise inadequate.

5.0 REFERENCES

(1) 10 CFR 830, Subpart A, Nuclear Safety Management, Quality Assurance Requirements

(2) AMWTP HWMA/RCRA Permit

(3) ANSI/ASME NQA-1-2008 Edition, Quality Assurance Requirements for Nuclear Facility Applications

(4) DOE/CBFO-94-1012, Quality Assurance Program Document

(5) DOE O 226.1A, Implementation of Department of Energy Oversight Policy

(6) DOE O 414.1C, Quality Assurance

(7) MP-DOCS-18.2, Records Management

(8) MP-LLW-19.7, Low Level Waste/Mixed Low Level Waste Verification

(9) MP-NSPC-3.2, Unreviewed Safety Question Process

(10) MP-PCMT-15.1, Acquisition of Material and Services

(11) MP-PCMT-15.21, Materials Management

(12) MP-Q&SI-5.2, DOE HSS OE Reporting

(13) MP-Q&SI-5.3, Corrective Action

(14) MP-TRUW-8.1, Certification Plan for INL Transuranic Waste

(15) MP-TRUW-8.2, Quality Assurance Project Plan

(16) PD-Q&SI-01, Contractor Assurance Program Description

(17) QAPP-01, Quality Assurance Program Plan

6.0 RECORDS

Records generated by this procedure are classified in accordance with the table below, and dispositioned in accordance with MP-DOCS-18.2, Records Management.

Record Description	Classification
MP-Q&SI-5.4, *Case File* (see def.)	Nonpermanent WIPP/ENV1-J-1/ Destroy 10 years after submittal
TrackWise database NCRs including objective evidence and verification (Records maintained in TrackWise database system)	Both FOR/NP WIPP/ENV2-a-1-a/ Destroy 5 years after life of facility

7.0 EXHIBITS

Exhibit 1 – AMWTP Characterization NCR (RTR, HGAS, Assay, AK, CCP) Process Flow

Exhibit 1 – AMWTP Characterization NCR (RTR, HGAS, Assay, AK, CCP) Process Flow

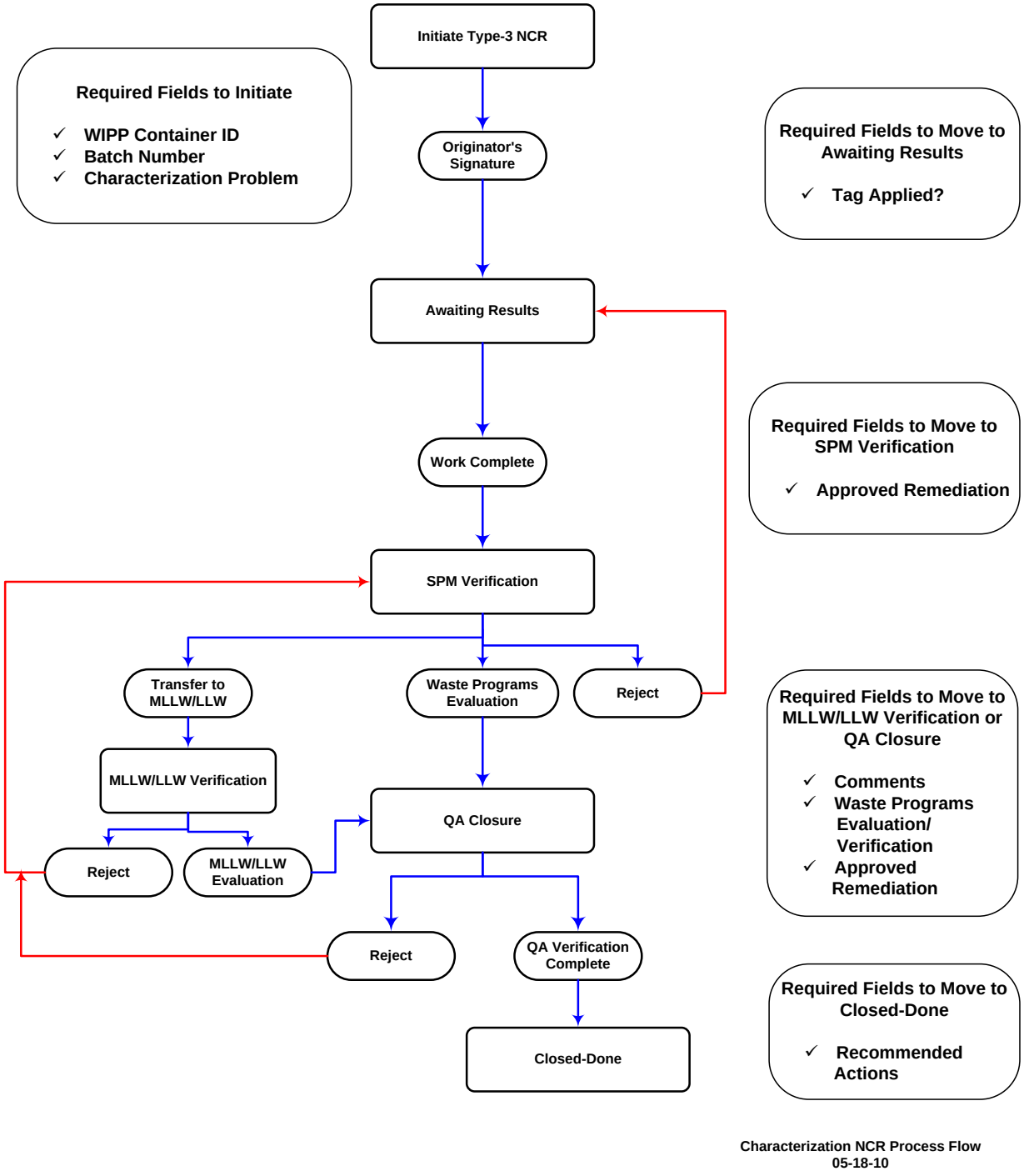

Characterization NCR Process Flow
05-18-10

8.0 APPENDICES

Appendix A – TrackWise Queries

Appendix B – Attaching Supporting Documentation

Appendix A – TrackWise Queries

Queries are most commonly performed when looking for some specific records to review or edit. TrackWise queries can also be saved and reused for reviewing records, generating a report, or performing trends.

Scope/Function Selection:

The Scope allows the user to select which data of interest is desired when searching or reviewing records. Scope is a user-defined range of the projects that are to be used when performing searches, queries, etc. To modify your scope, do the following:

1. On the TrackWise Desktop, click on the Scope pull-down menu and select View/Change Scope.

2. Turn On or Off the Projects you wish to include in the Scope by checking the appropriate check boxes ON or OFF.

3. Click on the Ok button, and the selected Scope will take effect.

There are six functions/record types to choose from:

- QA Program Nonconformance Reports (NCR)
- Corrective Action Reports (CARs)
- Management Assessment Reports (MAR)
- Action Item (AI)
- Characterization NCRs
- QA Surveillance Reports.

Creating and Saving a Query:

1. On the Menu Bar on the TrackWise DeskTop, press the Query button on the Tool Bar on the DeskTop.

2. Fill in the fields or selections from the various list boxes to create your query. Note that in the classification section, you have to select the name of a record field in the Primary List Box to the left, and then select or type in the value of the selected record field for the query in the Secondary List Box or area to the right.

3. To execute the query you have designated, press the Run button at the top of the screen.

4. If saving your query, press the Save button. Query name "New Query" is selected and ready for you to modify. This is a temporary name given to the query you have just created. Give your Query a meaningful name:

5. If the box is checked next to the query, this will cause the query to be made **public**, so all TrackWise users will be able to use it. It will appear in the Saved Queries drop-down list on the DeskTop, and will have (pub) following its name.

Public Queries:
On the TrackWise DeskTop public queries have been designed/built/saved for specific reviews and processes. The specific queries have been designed/built/saved to query for **NCR Batch Review** and **SPM NCR** Reviews processes. These queries are compiled of two selection values:

- Category – WIPP Data
- Quality (Type Material)-WIPP Batch – RTR, or Assay, or Core Sample, or HSGS, or VE New Gen or VE-Miscert.

NOTE: *Query Selections returns an exact match only.*

The below queries have been designed to query for NCR Batch and SPM Reviews for open records only:

- WIPP Batch ALD Lab (pub)
- WIPP Batch Assay (pub)
- WIPP Batch Core Sample (pub)
- WIPP Batch HSGS (pub)
- WIPP Batch RTR (pub)
- WIPP Batch VE New Gen (pub)
- WIPP Batch VE-Miscert (pub)
- WIPP Shipment (pub).

NOTE: *Saved public queries are open records only.*

Query for Closed Records:

Queries for closed records must be built for each inquiry. A closed query cannot be saved as a public query because a date range is required.

1. On the Menu Bar on the TrackWise DeskTop, press the Query button on the Tool Bar on the DeskTop.

2. Select Date Closed from the Primary List Box to the left under the Non-Selection Field, and then select the value (date) by clicking on the calendar for the date range. The date range will start with a date > = the start, and end range will end with a date < = the end.

3. To execute the query you have designated, press the Run button at the top of the screen.

4. The Date Closed query will result in closed records only.

General Search:

Using the Ad-Hoc Query Builder, the user can create queries and search for records in the database using multiple search criteria. The searches can be as general or as specific as the user wishes. Search results are viewed on the DeskTop, or saved for later use. The Ad-Hoc Query Builder screen is accessible via the Build New Query option in the Queries menu or *Query* button on the DeskTop. Filling in the available fields and/or selecting the desired options from the variety of selection boxes accomplish building a query. See below for selection box examples:

- Title: and Affected Item: Enter the title or partial title of the record you are searching for, preceded and/or followed by the "*" (Wildcard), and push the Run button.
- DOC From #, DOC To #: Type record numbers in both field, and push the Run button.
- Exclude Closed DOCS is pre-selected by the system; to Include Closed DOCS, select the radio button to the left.
- Classification (Selection Fields): The top left most box is the Primary List Box. This list box contains all the record fields of type "selection." The top right box is the Secondary List Box. This list box shows the selections available for each field name selected in the Primary List Box. For each field selected in the Primary List Box, the Secondary List Box will display a list of the contents or selections available for the primary selection.

  Example: Select Category from the primary list and select WIPP Data from the secondary list and push the *Run* button.

- All Non-Selection Fields: The bottom left most box is the Primary List Box for Additional Fields. This box contains names of all other non-selection type record fields. To the right of this box will be additional selection fields, based on the selection made in the Primary List Box for additional fields. The selection criteria available will be based on the format of the field selected.

  Example: Select Batch # from the primary list, Type *RTR03-00024*, Select Add, and push the Run button.

  Example: Select Container # from the primary list, Type *10000232* Select Add, and push the Run button.

Crystal Reports:
The user may select from two crystal reports. The first report is titled, "NCR Status Report" and the second titled, "Title Parent Child Report." The Operations Record Report was specifically designed for **NCR Batch Review** and **SPM NCR Review** processes, the report output will reflect the following fields:

- DOC ID #
- Function
- Record Status
- Affected Item Type
- Affected Item
- Short Description
- Batch #
- Container #
- Payload #
- Shipment #.

The Title Parent Child Report was designed for a general use including the children documents; the report output will reflect the following fields:

- DOC ID #
- Short Description
- Record Status
- Date Due
- Date Initiated
- Assigned To:
- Responsible Department
- Assigned Actionee
- Source
- Function.

1. Once you have run a query on your desktop, press the *REPORTS* button on the tool bar.
2. Next to the REPORTS: window, scroll down and select either report.
3. Push the *RUN* button, the report will run.
4. In the left hand corner, press the *PRINT* icon or *EXPORT* icon.
5. Exit the print screen and return to the desktop.

Appendix B –
Attaching Supporting Documentation

1. Place the scanned document on your hard drive in a known folder.
2. Open the TrackWise document.
3. Click on the file beside the “supporting documentation” section.
4. A window will open up. In that window, click on “browse.” This will open an explorer type window.
5. Go through the folders to the location of the file you placed on the drive earlier and highlight that file.
6. Click on “open.” This will take you back to the window with the browse button.
7. Click on the “add” button. This will pull the document into TrackWise.
8. Click on “view” to assure that the file was not corrupted.
9. Click on OK. This will close that window.
10. Hit the save button on the document.

Graded Approach

Advanced Mixed Waste Treatment Project

Approved:

(*Signature on file. See DCR-10709.*) 09/13/12

Angie Morse
Quality Assurance Engineer

Date

AMWTP MANAGEMENT PROCEDURE		
MP-Q&SI-5.6, Rev. 4	Issued: 09/13/12	Effective: 09/14/12
Graded Approach		

REVISION LOG

Revision Number	Date Approved	Pages Affected	Description of Revision
0	8/22/02	All	DCR-1408. Initial issue, this management procedure supersedes PQP 6.2, Revision 2.
1	2/18/03	All	Re-issue, see DCR-2002-1810. Revised to standardize definitions, and to incorporate comment resulting from CBFO review of procedure.
2	2/1/06	ALL	DCR-4776. Implement contract transition changes as identified on DCR-4299. Implement current MP-DOCS-18.3 requirements.
3	01/25/07	Cover Page	DCR-5677. Periodic Review. Minor change (advance periodic review date). As written, continues to meet AMWTP QA program requirements. No changes in content or responsibility.
4	09/13/12	Various	DCR 10709. Incorporate DOCS-BLUESHEET-08 and ITG-BLUESHEET-244

TABLE OF CONTENTS

1.0 PURPOSE/SCOPE 1

2.0 ROLES AND RESPONSIBILITIES 1

PROCEDURE 2

2.1 Classification Analysis 2

3.0 DEFINITIONS 2

4.0 REFERENCES 4

5.0 RECORDS 5

6.0 EXHIBITS 5

7.0 APPENDICES 5

AMWTP MANAGEMENT PROCEDURE		
MP-Q&SI-5.6, Rev. 4	Issued: 09/13/12	Effective: 09/14/12
Graded Approach		

1.0 PURPOSE/SCOPE

The purpose of this procedure is to describe the Quality Assurance Graded Approach to AMWTP Systems, Structures, and Components (SSCs) and services. This process is required to provide adequate and sufficient application of safety and quality requirements for public, worker, and nuclear safety, environmental protection, and radiological operations. This procedure describes the methodology, criteria, and documentation for implementing a graded approach to classification of items/services consistent with their function and importance to safe nuclear operations. The classification methodology allows a graded approach by applying the applicable 10 CFR 830 quality assurance criteria to an extent that is commensurate with the item's importance to public and worker safety, nuclear safety, environmental protection and commercial risk.

This procedure shall be used to apply the graded approach at the AMWTP. This procedure applies to all engineering, design, construction, procurement, installation, operations and maintenance work performed at the AMWTP. The Graded Approach does not allow quality requirements to be ignored or waived, rather it allows the degree of control, verification, and documentation to be varied based on risk and importance to safety. The implementation of this graded approach applies to AMWTP and subcontractor work activities.

(10 CFR 830)

This procedure also establishes and implements the graded approach for items and activities under the cognizance of the Carlsbad Field Office (CBFO), and therefore is submitted to CBFO for approval.

(CBFO-94-1012)

2.0 ROLES AND RESPONSIBILITIES

Performer	Responsibilities
Engineering and Maintenance Manager/designee	Responsible for maintaining SSC classifications in the MMS and identifying new SSCs for analysis and classification.
Environmental, Safety & Health (ES&H) Director	Responsible for the hazard and safety analysis and the identification of Safety-Class, Safety-Significant, and Important to Safety SSCs in the Documented Safety Analysis.
QA Manager	Responsible for review and concurrence of the classification of SSCs in the MMS, and for identification of the applicable QAPP requirements for AMWTP SSCs.

PROCEDURE

2.1 Classification Analysis

2.1.1 Classification is the process of identifying the activities and items within the AMWTP to which the QA program applies. The basis of the graded approach and classification of SSCs begins with the accident analysis principles applied for the determination of specific attributes of a SSC, as documented in the Documented Safety Analysis. At the AMWTP, SSCs are classified as Class I, Safety Class, Safety Significant; Class II, Items Important to Safety; and Class III, Non Nuclear Balance of Plant SSCs.

2.1.2 A Documented Safety Analysis is performed to document the facility hazard classification, and on the basis of a hazard and accident analysis, identify the Safety Class and Safety Significant SSCs to which full application of the QAPP management processes apply.

2.1.3 AMWTP SSCs that are not classified as Safety-Class or Safety-Significant, are then evaluated further for contribution to the protection of either the public, co-located workers, or facility workers, and to defense in depth. These Items Important to Safety identified in the DSA, and those SSCs whose reliability are of impact to regulatory, statutory, or contractual requirements are identified as Class II SSCs, to which the full application of the QAPP management processes apply.

2.1.4 AMWTP SSCs that do not meet the criteria of Class I or Class II are considered as Class III, Non Nuclear Balance of Plant items. Consequence of Failure of these SSCs results in minimal or no safety risk to the public, co-located workers, facility workers or defense in depth. The application of the QAPP management processes is determined based on the commercial risks to the project.

2.1.5 Classifications of SSCs are documented and maintained in the AMWTP Maintenance Management System (MMS).

3.0 DEFINITIONS

Class I Equipment – Equipment identified by the Documented Safety Analysis (DSA) as Safety Class or Safety Significant. Class I SSCs are those items whose failure presents the highest potential safety consequence and project risk. Class I SSCs are identified as Q-Listed SSCs. (See Appendix A, Equipment Classification Flow Chart)

Class II Equipment. Equipment controlled or designated by the DSA as "Other Items Important to Safety" by statutory requirements, by WIPP requirements, or certain Safety Equipment required by permit, or where a failure could directly cause injury to personnel, through a conventional or radiological means. (See Appendix A.)

Class III Equipment. All process equipment not considered Class I or Class II. (See Appendix A.)

Commercial Grade Item. An item that is (1) generally of a type customarily used by the general public or by non-government purposes, (2) not subject to design or specification criteria unique to the program or nuclear facilities, (3) used in applications other than the nuclear industry, (4) ordered from the manufacturer or supplier on the basis of specifications set forth in the manufacturer's published product description, and (5) a service ancillary to a commercial item, such as installation, maintenance, repair, and training, is considered a commercial service.

Graded Approach. A process by which the level of analysis, documentation, and actions necessary to comply with a requirement are commensurate with:

- The relative importance to safety, safeguards, and security.
- The magnitude of any hazard involved
- The life cycle stage of a facility
- The programmatic mission of a facility
- The particular characteristics of a facility
- The relative importance of radiological and non-radiological hazards
- Any other relevant factor

The graded approach process also includes evaluations for the level of application of managerial controls applied to a SSC or activity, based on the intended application and use, complexity, and degree of confidence needed.

Off-the-Shelf: An Item that is specified by a manufacturer's designation (such as Name, Model and /or Part Number) without modification, approved design output document, or supplemental requirement, which is used in various non-quality applications/activities and ordered from a supplier or the manufacturer.

Quality Listed. A designator applied to Class I SSCs specified in the Documented Safety Analysis as safety class or safety significant, whose function is necessary to assure that safety class and safety significant SSCs will continue to perform their intended function during a design basis accident.

Items Important to Safety. Class II SSCs that are not designated as Safety-significant or safety-class SSCs, but that provide a function that is a significant contributor to the protection of either the public, co-located workers, or facility workers, or is a significant contributor to defense in depth.

Safety Category. A designator used to identify the level of rigor applied to activities associated with SSCs based upon varying levels of potential consequence of their safety function, if any.

Safety - Class Systems, Structures, and Components. SSCs that have preventive or mitigative function(s) necessary to limit the dose or exposure from radioactive or other hazardous materials to a member of the offsite public to an acceptable value, as determined from the Documented Safety Analysis.

Safety Significant Systems, Structures, and Components. SSCs not designated as safety-class SSCs but whose preventive or mitigative function is a major contributor to defense in depth and/or worker safety and health, as determined from the Documented Safety Analysis.

Systems, Structures, and Components (SSCs). Consist of hardware or software used in the design, construction, and operation of the AMWTP.

4.0 REFERENCES

(1) QAPP-01, AMWTP Quality Assurance Program Plan

(2) RPT-DSA-02, AMWTP Documented Safety Analysis -

(3) MP-Q&SI-01-IM, Quality Assurance Program Requirements Matrix

(4) 10 CFR 830, Nuclear Safety Management

(5) DOE-CBFO-94-1012, Quality Assurance Program Document

5.0 RECORDS

Records may be either quality affecting or non-quality affecting records. If they are quality- affecting records, they may either be classified as Lifetime, Permanent, or Non-Permanent. Determination of record type is the responsibility of the Document owner, who may consult with Document Control or the Quality Assurance Department to help determine the record classification. Records are submitted to the National Archives and Records Administration (NARA) at the end of the retention period. The following records are generated as a result of this procedure.

Record Description	Classification
MP-Q&SI-5.6, Case File	Nonpermanent WIPP/ENV1-J-1/Destroy 10 years after submittal

6.0 EXHIBITS

None

7.0 APPENDICES

Appendix A, Equipment Classification Flow Chart

Appendix A - Equipment Classification Flow Chart

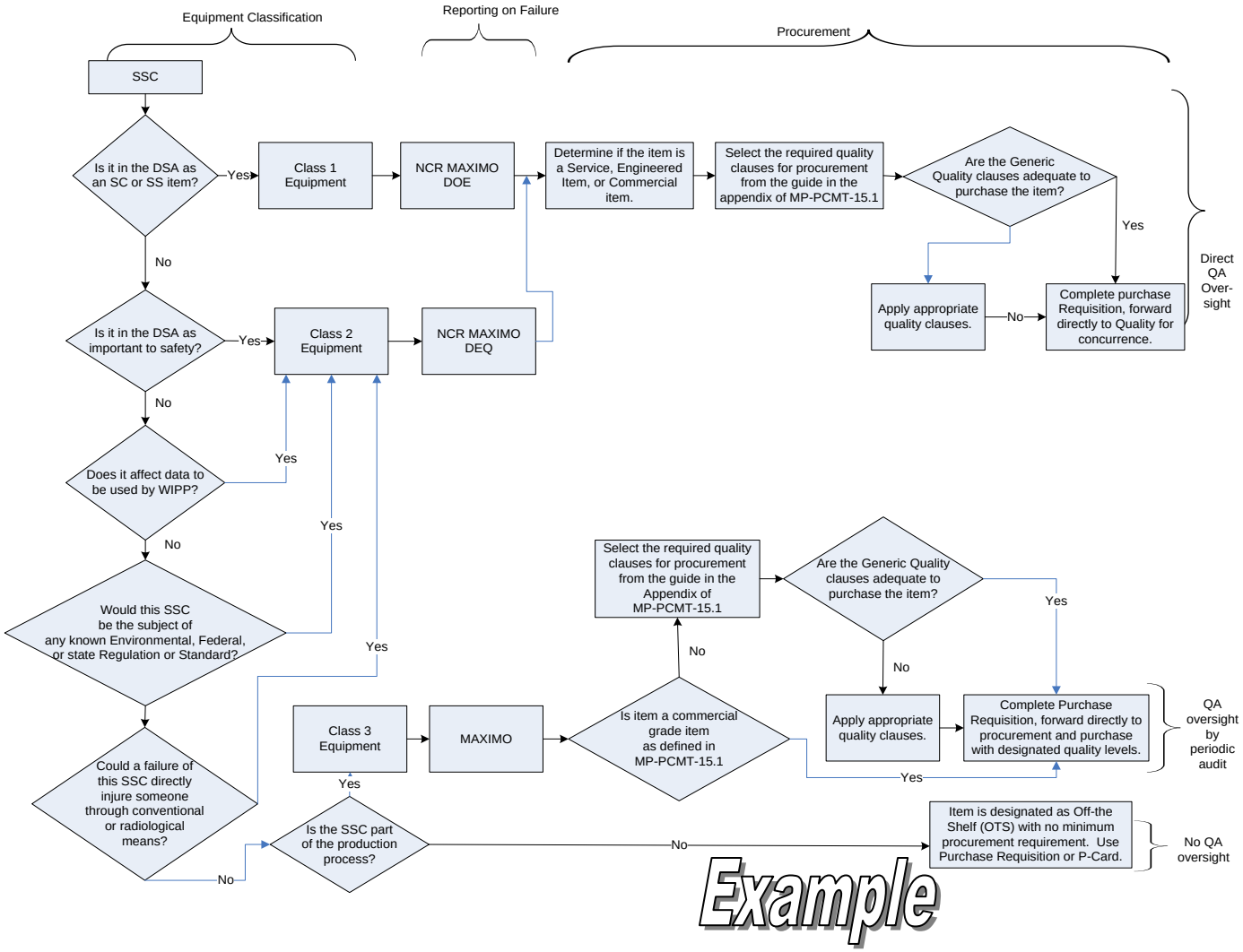

Qualifying Supply Chain Inspectors, Auditors, Lead Auditors, and Technical Specialists

Advanced Mixed Waste Treatment Project

Approved:

(Signature on file. See DCR-10710.)
Angie Morse
Quality Assurance Engineer

09/13/12
Date

AMWTP MANAGEMENT PROCEDURE		
MP-Q&SI-5.8, Rev. 8	Issued: 09/13/12	Effective: 09/14/12
Qualifying Supply Chain Inspectors, Auditors, Lead Auditors, and Technical Specialists		

REVISION LOG

Revision Number	Date Approved	Pages Affected	Description of Revision
0	8/19/02	All	Initial issue. This management procedure supersedes PQP 11.2 Revision 0. Approvals documented on DCR-1333.
1	1/9/03	See DCR-1543	DCR-1543, Revise Procedure to incorporate QA observations during Line Management Assessment. Ref. Management Assessment Report 1457 and Action Item 1468.
2	2/18/03	Pg. 4, section 2.0 Pg. 8, section 4.3.1.3	DCR-2005, Revised Procedure to incorporate comments provided by CBFO Adequacy Review (Reference: Letter CBFO: NTP: KWW: VW:03-0291:UFC: 5822 received 1/24/03)
3	02/23/03	Pages 4, 19, and 20	DCR-2055, Added section 5.4 to include qualification of Leak Detection Testers, referencing to AMWTP Forms-1439 and -1440, and written practice policy TRN-WPP-03-01
4	11/28/05	All	DCR-4352. This revision is a complete rewrite. Procedure was simplified by consolidating content. Global changes were made due to contractor change. Sections were reordered according to MP-DOCS-18.3, Rev. 2.
5	06/20/2006	Headers	DCR-5049. Minor changes to revise title to: "Qualifying Test Engineers, Supply Chain Inspectors, Audirots, Lead Audirotors and Technical Specialists."
6	6/20/2006	Revision Log	DCR-5112. Editorial. Correct revised title to: "Qualifying Test Engineers, Supply Chain Inspectors, Auditors, Lead Auditors and Technical Specialists."
7	04/08/08	Various	DCR-5770. Complete re-write to delete all requirements for and reference to test engineers.
8	09/13/12	Various	DCR-10710. Incorporated DOC-BLUESHEET-08 and ITG-BLUESHEET-244.

AMWTP MANAGEMENT PROCEDURE		
MP-Q&SI-5.8, Rev. 8	Issued: 09/13/12	Effective: 09/14/12

Qualifying Supply Chain Inspectors, Auditors, Lead Auditors, and Technical Specialists

TABLE OF CONTENTS

1.0 PURPOSE/SCOPE 1

2.0 ROLES AND RESPONSIBLITIES 1

3.0 PROCEDURE 2

3.1 Selecting and Qualifying Supply Chain Inspectors 2

3.2 Supply Chain Inspectors Visual Examination 2

3.3 Supply Chain Inspectors Written Examination 2

3.4 Completing, Approving, and Maintaining Records of Supply Chain Inspector Qualification 3

3.5 Annual Reviews of Supply Chain Inspectors 4

3.6 Requalifying Supply Chain Inspectors 4

3.7 Qualification Review of Supply Chain Inspectors Experiencing Interrupted Service 4

3.8 Employment Termination and Revoking Supply Chain Inspector's Qualification 5

3.9 Qualifying Candidate Auditors and Auditors Qualified by Other Organizations 5

3.10 Completing, Approving, and Maintaining Records of Auditor Qualifications 6

3.11 Qualifying Candidate Lead Auditors and Lead Auditors Qualified by Other Organizations 6

3.12 Completing, Approving, and Maintaining Records of Lead Auditor Qualification 8

3.13 Maintenance of Auditor and Lead Auditor Qualification 8

3.14 Requalification Requirements for Auditors and Lead Auditors Experiencing Interrupted Service 9

3.15 Reinstating Auditor or Lead Auditor Qualification 9

3.16 Qualifying Technical Specialists 9

4.0 DEFINITIONS 10

5.0 REFERENCES 11

6.0 RECORDS 12

7.0 EXHIBITS 12

8.0 APPENDICES 12

Appendix A – Instructions for Determining Auditor/Lead Auditor Qualification Points A1

AMWTP MANAGEMENT PROCEDURE		
MP-Q&SI-5.8, Rev. 8	Issued: 09/13/12	Effective: 09/14/12

Qualifying Supply Chain Inspectors, Auditors, Lead Auditors, and Technical Specialists

1.0 PURPOSE/SCOPE

This procedure describes the *qualification* (see def.) of *Supply Chain Inspectors* (SCIs; see def.), *Auditors* (see def.), *Lead Auditors* (see def.), and *Technical Specialists* (see def.) to perform assigned inspection and audit activities. This procedure addresses *applicable qualification* (see def.) requirements of 10 CFR Part 830, Subpart A, Quality Assurance Requirements; DOE-CBFO-94-1012, Quality Assurance Program Document; and QAPP-01, Quality Assurance Program Plan.

2.0 ROLES AND RESPONSIBLITIES

Performer	Responsibilities
Responsible Manager	• Select and assign personnel to qualify as a SCI.
Quality Assurance (QA) Manager	• Owns and maintains this procedure • Annually evaluates and documents SCIs qualification on Form-1235, Inspection and Test Personnel Qualification Record - QSCINSPE • Selects, trains, qualifies, re-qualifies, and assigns Auditors and Lead Auditors
Instructor (see def.)	• Instructs SCIs, administers and grades SCI examinations • Approves SCI candidates on the basis of having completed training and successfully passed examination
Training Organization	• Maintains SCI instructional materials and completed examination records • Maintains completed SCI, Auditor and Lead Auditor qualification and re-qualification records.
Supply Chain Inspectors	• Are qualified according to this procedure, are trained and/or oriented to develop competence in performing receipt *inspections* (see def.), including identifying *suspect/counterfeit items* (S/CIs; see def.).
Auditors	• Are qualified according to this procedure to plan and perform quality *audits* (see def.), and to evaluate the effectiveness of actions taken to correct conditions adverse to quality.
Lead Auditors	• Are qualified according to this procedure to organize, direct, and report audits, and lead audit personnel • Indoctrinate and qualify Technical Specialists to participate in specific audits.

3.0 PROCEDURE

3.1 Selecting and Qualifying Supply Chain Inspectors

3.1.1 The SCI selection shall be based on candidates' education, experience, and/or training commensurate with the scope, complexity, or special nature of receipt inspections to be performed.

3.1.2 The SCI candidates shall receive training and indoctrination on the methods, requirements, tools, applicable codes and standards, and AMWTP policies and procedures used to conduct receipt inspections.

3.1.3 SCI candidates shall demonstrate knowledge of the fundamentals and technical objectives of receipt inspection, including recognizing and identifying suspect/counterfeit items.

3.2 Supply Chain Inspectors Visual Examination

3.2.1 A Near-Vision Acuity exam is required annually. This exam verifies natural or corrected near-distance acuity in at least one eye. The applicant must be capable of reading a minimum of Jaeger Number 2, or equivalent type and size letter, at a distance of not less than 12 inches on a standard Jaeger test chart. The ability to perceive an Ortho-Rater minimum of 8 or similar test pattern is also acceptable.

3.2.2 A Color Contrast Differentiation exam is conducted upon initial qualification and at three-year intervals thereafter. This exam verifies the ability to distinguish and differentiate contrast among colors or shades of gray used in the method.

3.2.3 Contact the AMWTP Occupational Medical Program to schedule eye examinations.

3.3 Supply Chain Inspectors Written Examination

3.3.1 The SCI candidates must pass a general written examination administered and graded by an instructor.

3.3.2 SCI candidates shall achieve an exam grade of at least 80 percent to pass.

3.3.3 After examinations are graded, SCI candidates will review all incorrect answers (regardless of having passed or failed the exam) to aid comprehension of test material. Candidates shall document post exam reviews by signing and dating examination answer sheets.

3.3.4 The SCI candidates failing to achieve the required score should wait at least thirty days prior to reexamination, or receive suitable additional training prior to reexamination, as determined by the Instructor.

3.3.5 The instructor transmits completed examination records to the Training Department using Form-1044, Record Transmittal.

3.3.6 The Training Department controls SCI instructional material and examinations according to MP-RTQP-14.9, Instructional Materials Development, Revision, and Control.

3.4 Completing, Approving, and Maintaining Records of Supply Chain Inspector Qualification

3.4.1 The responsible manager shall initiate Form-1235 to document qualifications of candidate SCIs.

3.4.2 Each Form-1235 shall be approved prior to any SCI candidate's commencement of actual receipt inspections.

3.4.3 On each Form-1235, the QA Manager and the Instructor delivering the SCI training documents via signature that each candidate has been tested, evaluated, and qualified as capable of performing as a SCI.

3.4.4 The QA Manager shall identify a SCI qualification date, and a qualification expiration date, not to exceed three years on each Form-1235. The completed SCI qualification, Form-1235, is forwarded to the Training Department using Form-1044.

3.4.5 The Training Department shall maintain the completed SCI Form-1235.

3.5 Annual Reviews of Supply Chain Inspectors

3.5.1 The QA Manager shall review the SCI qualification annually and determine if additional training or requalification is necessary. This review verifies adequate job performance and annual completion of visual acuity testing.

3.5.2 The QA Manager shall document SCI annual review using Form-1235. The QA Manager transmits completed Form-1235 to the Training Department using Form-1044.

3.6 Requalifying Supply Chain Inspectors

3.6.1 The Responsible Manager shall ensure that a SCI qualification has not expired, and shall initiate requalification of SCIs.

3.6.2 The SCIs shall be re-qualified on the basis of: (1) evidence of continuing satisfactory performance and capability; or (2) reexamination of capabilities as determined necessary by the QA Manager.

3.6.3 The QA Manager shall initiate and complete a new Form-1235 to document and approve requalification of SCI's.

3.6.4 The QA Manager may examine the qualifications of SCI's at any time, and extend or revoke qualifications. The QA Manager transmits original SCI qualifications to the Training Department using Form-1044.

3.6.5 The Training Department shall maintain SCI requalification documentation.

3.7 Qualification Review of Supply Chain Inspectors Experiencing Interrupted Service

3.7.1 The qualification of SCIs shall be reviewed whenever inspection job duties have been interrupted for a period of six months or more.

3.7.1.1 The QA Manager may suspend a qualification upon review of current qualification requirements.

3.7.1.1.1 The QA Manager may suspend an SCI's qualification by so stating on that SCI's Form-1235, and transmits original of the qualification to the Training Department.

3.8 Employment Termination and Revoking Supply Chain Inspector's Qualification

3.8.1 An SCI's qualification shall be revoked when his or her employment is terminated, but may be reinstated if that SCI returns to employment within 6 months.

3.9 Qualifying Candidate Auditors and Auditors Qualified by Other Organizations

3.9.1 The QA Manager selects, qualifies, and assigns Auditor candidates based on their experience, education, and training commensurate with the scope, complexity, and nature of audit activities.

3.9.2 Required indoctrination and training shall be identified and documented according to MP-RTQP-14.1, Preparation and Administration of Training Plans.

3.9.3 Auditor candidates shall be trained in, or have a working knowledge of, 10 CFR Part 830, Subpart A, Quality Assurance Requirements; DOE-CBFO-94-1012, Quality Assurance Program Document; ANSI/ASME NQA-1 with its supplements; applicable codes, standards, DOE orders, and AMWTP procedures, manuals, and requirements necessary to conduct audits and report audit results.

3.9.4 Auditor candidates shall be knowledgeable of audit principles, objectives, and methods, and be trained to plan, perform, and report audits, and conduct audit planning in nuclear QA functional areas (software, nonconformance, etc.), and to evaluate the effectiveness of actions taken to correct conditions adverse to quality.

3.9.5 Auditor training shall include methods of examining, questioning, evaluating, and documenting specific audit items.

3.9.6 In lieu of formal training, Auditor candidates may receive OJT under the direction of a qualified Lead Auditor. This OJT shall include audit planning, performing, reporting, and conducting follow-up evaluations.

3.9.7 Auditor candidates shall have participated in at least three audits within the past two years as an auditor-in-training under the direction of a qualified Lead Auditor. One audit shall have been performed in the past year. Auditor participation shall be documented on QCAUDITR, Determining Auditor Qualification Checklist.

3.9.7.1 Auditor candidates must accumulate at least five "credits," as determined from Instructions for Auditor/Lead Auditor Qualification Points shown in Appendix A.

3.9.8 Auditors previously qualified by other organizations may receive qualification per MP-RTQP-14.3, "Training Exceptions, Exemptions and Extensions." Such Auditors must present their qualifications, credentials, formal certifications, and audit history to the QA Manager for review. This information is documented on Form-1031 "Request for an Exception to Training" and is approved by the QA Manager and Training Manager.

3.10 Completing, Approving, and Maintaining Records of Auditor Qualifications

3.10.1 QA Manager shall certify by signature that each Auditor candidate is qualified on QCAUDITR.

3.10.2 The completed QCAUDITR shall be transmitted to the Training Department using Form-1044.

3.11 Qualifying Candidate Lead Auditors and Lead Auditors Qualified by Other Organizations

3.11.1 Lead Auditor candidates shall meet the above Auditor qualification requirements and shall also be capable of organizing and directing audits, leading audit personnel, and evaluating planned actions to correct conditions adverse to quality.

3.11.2 Required indoctrination and training shall be identified and documented according to MP-RTQP-14.1, Preparation and Administration of Training Plans.

3.11.3 Lead Auditor candidates shall have conducted five or more audits within the past three years, one of which shall be a nuclear QA audit within the year prior to qualification. Lead Auditor candidates must accumulate at least ten "credits," as determined from Instructions for Auditor/ Lead Auditor Qualification Points, Appendix A.

3.11.4 The QA Manager shall certify that Lead Auditor candidates meet qualification requirements for education and experience, effective oral and written communication skills, training, audit participation, and successful completion of the Lead Auditor examination.

3.11.5 Lead Auditor candidates shall pass a Lead Auditor examination achieving an exam grade of at least 80 percent. The exam shall be provided, administered, and graded by the QA Manager.

3.11.6 Lead Auditor examinations may be oral, written, practical, or any combination, but administered without access to reference material. Examination results shall be recorded.

3.11.6.1 The Training Department controls Lead Auditor exams according to MP-RTQP-14.9.

3.11.7 After examinations have been graded, Lead Auditor candidates will review all incorrect answers (regardless of having passed or failed the exam) as an aid to comprehending test material.

3.11.7.1 Each candidate shall document post-exam reviews by signing and dating an answer sheet, or other form of documentation.

3.11.7.2 Exam records shall be transmitted to the Training Department using Form-1044.

3.11.8 Lead Auditor candidates failing to achieve a passing score should wait at least thirty days prior to reexamination, or receive suitable additional training prior to re-examination, as determined by the QA Manager.

3.11.9 Lead Auditors previously qualified by other organizations may receive qualification per MP-RTQP-14.3, Training Exceptions, Exemptions and Extensions. Such Lead Auditors must present their qualifications, credentials, formal certifications, and audit history to the QA Manager for review. This information is documented on Form-1031, Request for an Exception to Training, and is approved by the QA Manager and Training Manager.

3.12 Completing, Approving, and Maintaining Records of Lead Auditor Qualification

3.12.1 QA Manager shall document and certify by signature that each Auditor candidate is qualified on QCLEADAD, Lead Auditor Qualification Checklist.

3.12.2 The completed QCLEADAD shall be transmitted to the Training Department using Form-1044.

3.13 Maintenance of Auditor and Lead Auditor Qualification

3.13.1 Auditors and Lead Auditors remain qualified through one or a combination of the following activities:

3.13.1.1 Participation as an audit team member in at least one audit per year, such as management, independent, project, supplier, comprehensive surveillance, or process audit.

3.13.1.2 Review and study of codes, standards, QA procedures, instructions, or other documents related to QA programs, program auditing, or participation in quality auditor training programs.

3.13.2 Auditor and Lead Auditor participation in audits are recorded periodically on Form-1662, Audit Participation Record.

3.13.3 The QA Manager shall evaluate Auditors and Lead Auditors annually, and may extend their qualification, require additional training, require requalification, or suspend an Auditor or Lead Auditor qualification. This evaluation shall be documented in the qualification checklist (QCLEADAD or QCAUDITR) and transmitted to the Training Department using Form-1044.

3.14 Requalification Requirements for Auditors and Lead Auditors Experiencing Interrupted Service

3.14.1 Auditors and Lead Auditors who have failed to maintain their audit experience for two or more years shall re-qualify by one or more of the following methods as determined by the QA Manager.

3.14.1.1 Training in the principles and practices of quality auditing

3.14.1.2 Participation as an Auditor in at least one quality audit

3.14.1.3 Requalifying as a Lead Auditor to current procedural requirements.

3.14.2 The QA Manager shall document actions taken to re-qualify Auditors or Lead Auditors using the QCAUDITR or QCLEADAD checklist, respectively.

3.15 Reinstating Auditor or Lead Auditor Qualification

3.15.1 Having left AMWTP employment, an Auditor or Lead Auditor qualification may be reinstated without additional experience or re-examination after review by the QA Manager. The Auditor or Lead Auditor must return to employment within 6 months.

3.16 Qualifying Technical Specialists

3.16.1 The QA Manager or Lead Auditor may qualify Technical Specialists to participate in specific audits. Such personnel are qualified by indoctrination in the scope and conduct of the audits as described by AMWTP procedures. This indoctrination shall be commensurate with the scope, complexity, or special nature of the audit.

3.16.2 The QA Manager or Lead Auditor documents the indoctrination of Technical Specialists in the audit or assessment report.

4.0 DEFINITIONS

Audit. A planned and documented activity performed to determine by investigation, examination, or evaluation of objective evidence the adequacy of and compliance with, established procedures, instructions, drawings, and other applicable documents, and the effectiveness of implementation. An independent assessment should not be confused with surveillance or inspection activities performed for the sole purpose of process control or product acceptance.

Auditor (Assessor). Qualified (according to this procedure) to participate on internal and external assessment teams. Conducts interviews, observes operations, reviews data and documents, gathers and evaluates objective evidence to determine conformance to established requirements and adequacy of work performance.

Inspection. Measuring, examining, testing, and gauging one or more characteristics of a product or service and comparing the results with specified requirements to determine whether conformity is achieved for each characteristic.

Instructor. Individual who leads instruction of trainees by delivering prepared instructional materials. Delivers instructional material, administers and grades examinations of trainees.

Lead Auditor (Assessor). Qualified (according to this procedure) to lead internal and external assessment teams. Organizes, conducts, and reports assessments, and directs audit personnel. Requests assessed organization's management to correct conditions adverse to quality.

Qualification. Demonstrated skill and knowledge, documented training, and documented experience required for personnel to properly perform the duties of a specific job.

Supply Chain Inspector (SCI). The Supply Chain Management receiving agent responsible for conducting and documenting the evaluation of delivered items for compliance to procurement documents, or basis for rejection.

Suspect/Counterfeit Items (S/CIs). An item is suspect when inspections or testing indicates that it may not conform to established government or industry-accepted specification or national consensus standards or whose documentation, appearance, performance, material, or other characteristics may have been misrepresented by the supplier or manufacturer. A counterfeit item is one that has been copied or substituted without legal right or authority or whose material, performance, or characteristics have been misrepresented by the supplier or manufacturer. Items that do not conform to established requirements are not normally considered S/CIs if nonconformity results from one or more of the following conditions (which must be controlled by site procedures as nonconforming items): (1) defects resulting from inadequate design or production quality control; (2) damage during shipping, handling, or storage; (3) improper installation; (4) deterioration during service; (5) degradation during removal; (6) failure resulting from aging or misapplication; or (7) other controllable factors.

Technical Specialist. Individual designated to provide technical expertise support in performance of Quality Assurance assessments and audits.

5.0 REFERENCES

(1) 10 CFR Part 830, Nuclear Safety Management, Subpart A–Quality Assurance Requirements, Office of the Federal Register, Washington, D.C.

(2) DOE/CBFO-94-1012, Quality Assurance Program Document, U.S. Department of Energy, Carlsbad Area Office

(3) ANSI/ASME NQA-1-2008, Quality Assurance Requirements for Nuclear Facility Application

(4) QAPP-01, Quality Assurance Program Plan

(5) MP-DOCS-18.2, Records Management.

(6) MP-RTQP-14.1, Preparation and Administration of Training Plans

(7) MP-RTQP-14.9, Instructional Materials Development, Revision, and Control

6.0 RECORDS

Records generated by this procedure are classified in accordance with the table below, and dispositioned in accordance with MP-DOCS-18.2, Records Management.

Record Description	Classification
MP-Q&SI-5.8, Case File	Nonpermanent WIPP/ENV1-J-1 Destroy 75 years after submittal to RMC
Form-1235, Inspection and Test Personnel Qualification Record - QSCINSPE	Nonpermanent WIPP/ENV1-J-1 Destroy 75 years after submittal to RMC
Form-1662, Audit Participation Record	Nonpermanent WIPP/ENV1-J-1 Destroy 75 years after submittal to RMC
Form-1031, Request for an Exception to Training	Nonpermanent WIPP/ENV1-J-1 Destroy 75 years after submittal to RMC

7.0 EXHIBITS

None

8.0 APPENDICES

Appendix A – Instructions for Determining Auditor/Lead Auditor Qualification Points

Appendix A – Instructions for Determining Auditor/Lead Auditor Qualification Points

5 Credits are needed to qualify as an Auditor
10 Credits Are Needed to Qualify as Lead Auditor

I	EDUCATION (count highest degree only) only from an accredited institution	MAXIMUM 4 CREDITS
	Associate's Degree	Award 1 Credit
	Associate's Degree in Engineering, Physical Sciences, Mathematics, or Quality Assurance	Award 2 Credits
	Bachelor's Degree	Award 2 Credits
	Bachelor's Degree in Engineering, Physical Sciences, Mathematics, or Quality Assurance	Award 3 Credits
	Master's Degree in Engineering, Physical Sciences, Business Management, or Quality Assurance	Award 4 Credits

II	EXPERIENCE.	MAXIMUM 9 CREDITS
	Technical - One credit for each year, up to five credits maximum	Award 1 Credit/Year
	Nuclear Industry - One additional credit for two or more years	Award 1 Credit Max
	Quality Assurance – Two additional credits for two or more years	Award 2 or 0 Credits
	Auditing – Three additional credits for two or more years	Award 3 or 0 Credits
	Nuclear related QA – Three additional credits for two or more years	Award 3 or 0 Credits
	Nuclear related QA auditing – Four additional credits for two years or more years	Award 4 or 0 Credits

III	PROFESSIONAL CERTIFICATION	MAXIMUM 2 CREDITS
	Engineering, Science, or Quality Assurance	Award 2 Credits
	Professional Engineer (Registered by State Agency)	Award 2 Credits
	National Professional or Technical Society	Award 2 Credits

IV	RIGHTS OF MANAGEMENT**	MAXIMUM 2 CREDITS

** Based on performance factors such as leadership, sound judgment, maturity, analytical ability, tenacity, past performance, and QA training courses beyond those specifically required by this procedure.

Personnel Qualification and Certification

Advanced Mixed Waste Treatment Project

Approval:

(*Signature on file. See DCR-12846.*) 11/27/13

Date

AMWTP MANAGEMENT PROCEDURE		
MP-RTQP-14.4, Rev. 22	Issued: 12/03/13	Effective: 12/04/13
Personnel Qualification and Certification		

REVISION LOG

Revision Number	Date Approved	Pages Affected	Description of Revision
0	8/26/02	All	Initial issue, MP-RTQP-14.4; Personnel Qualification and Certification. This MP supercedes PQP 2.1, Revision 2.
1	01/06/03	All	Re-structured procedure for smoother flow. Added requirements of HWMA/RCRA document. Added definition of "Provisional and Final qualifications". Added section on SWPP Requirements. Added section on Fissile Material Handlers qualification. Added description of qualification packages. Added Note at end of Section 4.4.1.9. Added Technical Staff listing and training section. Added section on Entry Level Requirements. Re-defined Access Requirements and General Employee Training Sections.
2	01/28/03	Page 29 Section 4.5.2.6.2	Changed 4 hours to 6 hours. This was mistakenly entered as a typo. The correct number should have been 6 hours, not 4 as in previous revision.
3	02/25/03	Sections 4.2.4 & 4.2.5	Corrected typo in Sections 4.2.4 & 4.2.5 that should have said "as specified in Step 4.2.1.1" not Step 4.1.1.1.
4	03/19/03	Sections 4.2.1.1.1.1. Section 4.2.2.1	Added Waste Management Activities performed in the AMWTP. Reworded paragraph to meet RCRA requirements.
5	07/08/03	Section 4.7.15 & 16 Page 43	Renumbered Section 4.7.15 Management and Supervisory Personnel to Section 4.7.16 and added Independent Technical Reviewer to Section 4.7.15 to satisfy comments from Carlsbad Field Office on ITR Requirements.
6	8/29/03	Page 16 Section 4.4.1.10	Renumbered Section 4.4.1.10 through 4.4.1.18 due to correct typo that listed Step 4.4.1.10 twice.

AMWTP MANAGEMENT PROCEDURE		
MP-RTQP-14.4, Rev. 22	Issued: 12/03/13	Effective: 12/04/13
Personnel Qualification and Certification		

Revision Number	Date Approved	Pages Affected	Description of Revision
7	01/20/04	Sections 4.2.1.1.1.1, 4.2.2.1, 4.2.3, 4.2.3.1, 4.2.7, 4.2.8, 4.4.1.2.1, 4.4.1.4, 4.4.1.7, 4.4.1.8, 4.4.2.3, 4.4.2.3.1, Section 4.2.10 Section 4.4.1.9 Section 4.4.1.10 Sections 4.4.1.11-4.4.1.19	Added (HWMA/RCRA Treatment Permit) as a procedural driver Removed "in the form of a video. No exam is required for this course" and added "…as part of Facility Access Training" Added "Retrieval" before Operations Technicians to differentiate between Facility and Retrieval Technicians; added QP-OT-2-C "Headspace Gas Automated Manifold" under Sampling Core Skill Set and QP-OT-7-A "Packaging/Shipping/Storage" under Packaging/Shipping/Storage Core Skill Set Added section to read: "Facility Operations technicians must complete qualification in the core skills assigned to support operations. Level 1 Technicians must complete one core skill listed below, while Level 2 Technicians must complete three core skills." Facility Skill sets and Qualification Packages are delineated in this section. Renumbered sections to account for addition of Facility Qualification Packages.
8	05/19/04	All	DCR-2962. Clarified the intent of Sections 4.6 and 4.7.13. Reformatted the document, bringing it to the standard. Correct reference CAO-94-1012 to DOE/CBF0-94-1012. Add WAP required items for a test drum to Section 4.7.1.1. Add appropriate reference to Welder qualification process/requirements in Section 4.7.9 to reflect the direction of Phase 3 activity. No rev bars, complete rewrite.
9	06/17/04	Page 15 All	DCR-3088. Remove "to all candidates" throughout as it is not applicable to procedure. Update formatting to standard.

AMWTP MANAGEMENT PROCEDURE		
MP-RTQP-14.4, Rev. 22	Issued: 12/03/13	Effective: 12/04/13
Personnel Qualification and Certification		

Revision Number	Date Approved	Pages Affected	Description of Revision
10	2/17/05	Sections 4.2.B, 4.2.1.1.1, 4.2.6, 4.4.1.9, 4.4.1.10, 4.4.2.2, 4.7.9.3, 4.7.14.1	DCR-4156. Remove reference to Storm Water Pollution Prevention; Update Facility Qualification Packages; add completing written Qualification Package Examination with a score of 80% or better; add positions of Maintenance Engineer, Design Engineer, Process Engineer, IT/Network Engineer, Criticality Safety Engineer.
11	2/14/06	All	DCR-4216. Major revision. AI 7234 - Describe the qualification process for operations technicians. AI 7235 - Identify continuing training requires as defined in DOE O 5480.20A, and include elements designed to improve Level of Knowledge. AI-8681, address qualification status when recurring training, (Hazwoper, RCRA, Respiratory, Radworker, etc), expires to minimize the potential for assigning expired operators to work tasks. CAR 13077, Remove Technical Staff list to eliminate duplication of the list. The Tech Staff list is in MP-RTQP-14.20. CAR 13079, Define the process for capturing the QAPP requirement for management to continually review the qualification. Form-1010 is required to revise a qual pack, to document evidence to 'continually reviewing' the qualification requirement. Car 13083, Describe re-qualification process when an employee is disqualified due to performance issues who was previously excepted from Training. CAR 13819 – 1. Establish DOE OJT requirements into Section 3.0 and 4.0 of the qualification package. 2. Define the qualification package revision control process and forms required to conform with QAPP Step 2.2.6. Incorporate requirements from contract transition, including BLUE SHEET requirements as listed on DCR-4299. Incorporate current MP-DOCS-18.3 formatting requirements.

Revision Number	Date Approved	Pages Affected	Description of Revision
12	06/19/06	Various	DCR 4983. Add new Section "Proficiency Program for Fissile Material Handler Qualified Personnel" for implementation of DSA annual update.
13	12/29/06	Various	DCR-5553. Added education requirements for identified managerial positions per DOE O 5480.20A.
14	11/19/08	Various	DCR-7249. Changes made to address CAR 38437. Clarified directions for including courses in qualification packages and checklists and clarified wording for disqualification. Deleted requirement to use Form-1657. Deleted unnecessary appendices. Refer to qualification packages, checklists, and individual training plans for requirements. Made editorial corrections per MP-DOCS-18.3.
15	01/13/09	Various	DCR-7859. Minor change to remove roll-down requirement, is no longer needed, as the requirement for FH Qualification if driven by the Order, not the DSA or the TSR. Apply DOCS-BLUESHEET-01, and DOCS-BLUESHEET-03 changes.
16	03/18/10	Various	DCR-9073. Add additional direction and clarification for continuing training and technical staff position analysis to address issues from CAR 47696 and CAR 47697.
17	02/10/11	Pg 9	DCR-9886. Minor change to add note to Step 3.5.2 that clarifies the requirements of DOE O 5480.20A.
18	08/28/12	Various	DCR-11543. Incorporated changes for process improvement for DOE Order 426.2 implementation.
19	10/17/12	Step 3.9.1 & Section 5.0	DCR-11777. Added LST-RTQP-03-IM as a9 rolldown to add requirement and included it in reference section.
20	05/29/13	Various	DCR-11955. CAR 77060, 77074, 77115. Revisions to incorporate requirements identified for implementation of ISMS Phase II.
21	08/06/13	Various	DCR-12603. Changed Step 3.7.3 to reflect DOE O 426.2; edited for consistency. Updated reference list.
22	11/27/13	Various	DCR-12846. Added a new note regarding use of the QWL, and a new definition for Qualified Watch List (QWL) to meet AI ISMS 79345 (QA.1-O-1 QA 2 Issue 10). Edited for consistency.

TABLE OF CONTENTS

1.0 PURPOSE/SCOPE 1

2.0 ROLES AND RESPONSIBILITIES 1

3.0 PROCEDURE 3

3.1 Introduction 3

3.2 Initial Training 4

3.3 Continuing Training 7

3.4 DOE O 426.2 Operators, Technicians, and Maintenance Personnel Training Requirements 9

3.5 Technical Staff Training 10

3.6 Qualification of Training Staff 12

3.7 Qualification of Managers and Operations Management Personnel 13

3.8 Qualification of Supervisors 14

3.9 Development of a Qualification Package 15

3.10 Qualification/Certification Process 19

3.11 Requalification and Recertification Requirements 21

3.12 Changing Qualification Package Training Requirements 23

3.13 Disqualification 24

3.14 Qualification Checklists 26

3.15 Proficiency Program for Fissile Material Handler Qualified Personnel 26

4.0 DEFINITIONS 27

5.0 REFERENCES 27

6.0 RECORDS 29

7.0 EXHIBITS 29

8.0 APPENDICES 29

AMWTP MANAGEMENT PROCEDURE		
MP-RTQP-14.4, Rev. 22	Issued: 12/03/13	Effective: 12/04/13
Personnel Qualification and Certification		

1.0 PURPOSE/SCOPE

This procedure describes the *qualification* (see def.) process for personnel involved in the operation, maintenance, support, and other job duties as listed in Appendix A of MP-RTQP-14.20, Training Implementation Matrix. This includes the initial and continuing training, qualification, and certification requirements, and describes the proficiency, requalification, and disqualification processes.

This procedure implements the requirements of Department of Energy Order (DOE O) 426.2 Personnel Selection, Training, Qualification, and Certification Requirements for DOE Nuclear Facilities; MP-TRUW-8.1, Certification Plan for INL Transuranic Waste; and MP-TRUW-8.2, Quality Assurance Project Plan.

The qualification processes ensure that AMWTP employees, subcontractors, and temporary employees are trained to be competent and proficient in performing plant operations.

2.0 ROLES AND RESPONSIBILITIES

Performer	Responsibilities
Manager	• Ensures that clear lines of authority, responsibility, and communication are established, defined, and maintained, and that these relationships are documented in the form of organization charts and job descriptions for all personnel • Directs the activities of their staff to ensure AMWTP establishes and maintains a fully trained and qualified workforce per applicable requirements.

Performer	Responsibilities
Operations Management	• Defines training and qualification requirements in each functional level • Reviews and updates qualification and *training programs* (see def.) to reflect changes to the facility, procedures, and regulations • Ensures all personnel are properly trained and qualified before performing assigned job duties • Receives and acts on training and qualification direction/ guidance offered by managers • Provides direction to supervisors and other support personnel • Works with the Training Organization to ensure that personnel training and qualification needs are met.
Supervisors	• Ensures that all operators, technicians, and maintenance personnel are qualified to perform tasks or are working under direct supervision of qualified personnel • Directs, oversees, and supervises day-to-day operations • Works with the Training Organization to ensure that personnel training and qualification needs are met.
Training Department	• Implements the *systematic approach to training* (SAT; see def.) process for developing qualification packages and checklists.
Training Manager	• Implements the training and qualification program • Reviews and approves training and qualification packages.
Subject Matter Expert (SME)	• Performs technical reviews on qualification packages.

3.0 PROCEDURE

3.1 Introduction

The requirements in DOE O 426.2 apply to personnel involved in the operation, maintenance, and technical support of non-reactor nuclear facilities. Entry-level requirements, training, and qualification for personnel working in nuclear facilities are intended to provide reasonable assurance that these personnel have, or can acquire, the knowledge and skills to operate and maintain the facility in a safe and reliable manner under all conditions.

The Human Resources Department performs selection and hiring functions in accordance with MP-ADMN-1.6, AMWTP Recruitment, Selection, and Hiring of Personnel. This process considers factors such as background, experience, and education and is based on the ability of the applicant to meet job performance requirements. If an individual does not meet the experience requirements, consideration may be given to the collective experience of the facility. Individuals who do not meet the experience requirements for a position may be assigned to that position provided the overall organization is considered balanced and strong and that approval is obtained from DOE in accordance with MP-RTQP-14.1, Preparation and Administration of Training Plans, on a case-by-case basis.

3.1.1 Education and experience shall be verified by the manager on the Employee Position Description (EPD) in accordance with MP-RTQP-14.1.

NOTE: *Managers, supervisors, and other AMWTP employees may use the* Qualified Watch List *(QWL, see def.) to verify training completion. Use of the QWL, an application available through the Training Records and Information Network (TRAIN) Reports under the Watch List function is recommended but not required. A computer-based training module is available to help personnel utilize the QWL application.*

3.1.2 AMWTP management and supervision are responsible for ensuring that personnel are properly trained, qualified, and proficient prior to performing unsupervised job functions.

3.1.2.1 Personnel may be temporarily assigned to perform a management or supervision role without meeting the full qualification, provided a determination is made to ensure that collective resources are available to support the individual if needed.

3.1.3 Subcontractor personnel must meet the qualification requirements for the job function to be performed. Subcontractor and temporary personnel who perform specialized activities (such as, radiation protection, maintenance, in-service inspection, radiography, and welding) shall be supervised by a person who meets the qualification criteria or shall be qualified to perform their assigned tasks by properly documenting **ONE** of the following:

- The satisfactory result of an audit of subcontractor records that relate to qualification of the subcontractor personnel being considered for assignment by the operating organization
- Previous verification (within 2 years) of the ability of the subcontractor employee to perform assigned tasks safely and efficiently
- Successful completion by the subcontractor employee of those segments of the operating organizations qualification program that are considered pertinent to the accomplishment of the task to be performed.

3.1.4 Subcontractors that do not meet the qualification requirements and perform activities on engineered safety features as identified in the facility Documented Safety Analysis must be supervised by a person who meets the qualification criteria established by the operating organization for conduct of the activities.

(HWMA/RCRA Permit; HWMA/RCRA TSA IS Document; DOE/CBFO-94-1012)

3.2 Initial Training

NOTE: *At AMWTP, the SAT process uses job analysis for operator, shift supervisor, and maintenance and technician positions. Less formal position analysis approaches may be used for technical staff, supervisor, and manager positions.*

3.2.1 All training and qualification programs shall be identified and developed per the SAT process using the *graded approach* (see def.).

NOTE: *The training and qualification program must be developed using a graded approach based on the hazards involved and risk associated with the operation of the facility or activity. Accordingly, the level of detail and content of the training program, and associated documents or procedures must reflect the personnel selection, training, and qualification that are required at AMWTP.*

3.2.2 All personnel who need unescorted access to AMWTP shall receive Facility Access Training, including training in the following areas:

- General description of the facilities
- Job-related policies, procedures, and instructions
- Radiological health and safety program
- Facility emergency plans
- Industrial Safety/Industrial Hygiene program
- Security program
- Quality Assurance (QA) program
- Criticality safety
- Fire protection.

3.2.3 An understanding of Facility Access Training shall be evaluated by administering written examinations.

3.2.3.1 Persons who do not pass this examination must not be permitted access without a continuous escort.

3.2.3.2 All hazard identification and safety signage on the written examination must be identical in appearance and language as it exists at the facility.

3.2.3.3 The examination must cover areas selected for training and must be of sufficient difficulty to ensure the person has adequate knowledge to work independently at the facility.

3.2.4 Visitors, contracted personnel, and temporary personnel shall be under continuous escort while at the facility unless they have completed Facility Access Training.

3.2.5 For persons requiring long-term (e.g., more than 10 working days) access, understanding of the information provided by the General Employee Training program must be evaluated by administering a written examination (includes computer or web-based training examinations).

NOTE: *Initial training is designed to familiarize new Operating Organization personnel with the information and protocols necessary to maintain a safe work environment at the AMWTP.*

3.2.6 Initial training is required for Operations personnel at AMWTP to enhance their knowledge and skills to perform job assignments.

3.2.7 Initial training shall include a core of subjects such as industrial safety, instrumentation and control, basic physics, chemistry, industry operating experience, and major facility systems as applicable to the position and the facility.

3.2.7.1 All initial and recurring training courses, qualification checklists, and qualification packages shall be listed in the employee's *individual training plan* (ITP; see def.) per MP-RTQP-14.1.

3.2.8 Personnel who are in the process of completing training on tasks and activities for which they are not fully qualified must work under the direct supervision of someone who is qualified, and must not independently make decisions or take action when that work could affect facility safety.

3.2.8.1 AMWTP management must not place personnel who are in training in such positions. However, they may independently perform specific tasks or job assignments for which they are qualified.

3.2.8.2 Personnel may be temporarily assigned to perform a management or supervision role without meeting the full qualification provided a determination is made to ensure that collective resources are available to support the individual if needed.

3.2.9 Personnel involved with the management of mixed waste shall receive annual Hazardous Waste Management Act/Resource Conservation Recovery Act (HWMA/RCRA) training.

(HWMA/RCRA Permit; HWMA/RCRA TSA IS Document)

3.2.10 Documentation that personnel working at the mixed waste facilities have received initial emergency response training, annual training, and specialized training shall be maintained in their training records.

(HWMA/RCRA Permit; HWMA/RCRA TSA IS Document)

3.2.11 Personnel with the potential to be exposed to mixed waste shall receive Hazardous Waste Operations and Emergency Response (HAZWOPER) training for treatment, storage, and disposal facilities (24-hr initial). Form-2159, 24-Hour HAZWOPER Checklist (0AWT2510), is used to document completion of 24-hour HAZWOPER training.

(HWMA/RCRA Permit; HWMA/RCRA TSA IS Document)

3.2.12 Initial training requirements shall be completed within 6 months of the individual's date of employment or assignment to a mixed waste facility, when their position involves the management of mixed waste.

(HWMA/RCRA TSA IS Document; HWMA/RCRA Permit)

3.3 Continuing Training

3.3.1 Continuing training programs shall be identified and developed per the SAT process during the initial development of training programs.

3.3.2 Continuing training programs shall be designed to maintain and enhance the knowledge and skills of AMWTP personnel.

3.3.2.1 Continuing training programs shall be required for Operations personnel who perform functions associated with *safety significant systems structures, and components* (see def.).

3.3.3 The guidance in DOE-HDBK-1118-99, Guide to Good Practices for Continuing Training, shall be used to develop continuing training programs.

3.3.4 Continuing training elements for operators, technicians, maintenance personnel, and their supervisors are listed in the requalification package for each position.

3.3.4.1 The requalification package for operator, shift supervisor, maintenance, and technician positions is required to be completed every 2 years.

3.3.4.2 The requalification package shall include selected fundamentals with the emphasis on seldom used knowledge and skills necessary to assure safety.

3.3.5 The employee's supervisor or manager shall assign additional courses, tailgate briefings, required reading, proficiency evaluations, or qualification package addendums to cover significant facility and component changes, procedure changes, industry operating experience, and other training needed to correct identified performance problems.

3.3.6 An understanding of continuing training for operators and their immediate supervisors shall be evaluated by administering periodic tests during the continuing training cycle or comprehensive written examinations.

3.3.7 Continuing training programs for the certified positions of fissile material handler (FMH) and fissile material supervisor shall also consist of the requirements from MP-RTQP-14.21, Criticality Safety Training, listed in the recertification package and the annual continuing training course (0AWT2650), which includes a written exam covering abnormal conditions and emergencies.

3.3.8 Personnel involved with the management of mixed waste shall receive annual HWMA/RCRA refresher training as part of HAZWOPER refresher.

3.3.8.1 This training reviews the Contingency Plan, required HWMA/RCRA inspections, and mixed waste management procedures.

(HWMA/RCRA Permit; HWMA/RCRA TSA IS Document)

3.3.9 Personnel with the potential to be exposed to mixed waste shall receive HAZWOPER refresher training for treatment, storage, and disposal facilities (8-hr). Form-2160, 8-Hour HAZWOPER Refresher Checklist (0AWT2520), is used to document completion of 8-hour HAZWOPER refresher training.

(HWMA/RCRA Permit; HWMA/RCRA TSA IS Document)

NOTE: *Continuing training at AMWTP includes recurring training courses for required health and safety topics, criticality safety, and safety basis as listed on the employee's ITP.*

3.3.10 All personnel shall complete all other recurring training required for their assigned duties.

3.4 DOE O 426.2 Operators, Technicians, and Maintenance Personnel Training Requirements

NOTE: *Technicians and maintenance personnel are principally involved in calibration, inspection, troubleshooting, testing, maintenance, and radiation protection activities.*

3.4.1 Operators, technicians, and maintenance personnel shall meet the entry-level education and experience requirements as follows:

Position	Education/Job-Related Experience[1]
Operators, Technicians, and Maintenance Personnel	High School Diploma
Operators and Technicians	1 year job-related experience
Maintenance Personnel	1 year maintenance-related experience

1. Alternatives to education and experience are described in MP-RTQP-14.1.

3.4.2 All technicians and maintenance personnel shall be qualified to perform tasks or work under direct supervision of qualified personnel.

(HWMA/RCRA Permit; HWMA/RCRA TSA IS Document)

3.4.2.1 Written examinations shall be administered to technicians and maintenance personnel.

3.4.2.2 A comprehensive final examination need not be administered to ascertain formal qualification of technicians and maintenance personnel (with the exception of radiological control technicians (RCTs), who must comply with the requirements of 10 CFR 835, Occupational Radiation Protection).

3.4.2.3 Satisfactory completion of the continuing training program, performance of their assigned duties, and assessment of individual performance such as that which is typically included in personal performance appraisals may be used to document continued satisfactory performance.

3.4.3 Personnel who work on safety significant systems, as identified in RPT-DSA-02, Documented Safety Analysis, or systems that have a direct impact on the safe operation of the plant, shall be trained to work on those systems/components.

3.4.3.1 System training shall include:

- Purpose of the system
- General description of the system including major components, relationship to other systems, and all safety implications associated with working on the system
- Related industry and facility-specific experience.

3.4.4 Training program content for radiological control technicians must be in accordance with the requirements contained in 10 CFR 835 and DOE-STD-1098-2008, Radiological Control.

3.4.4.1 DOE HDBK-1122-99, Radiological Control Technician Training, which includes additional guidance, shall be used in developing initial and continuing training for radiation technicians.

3.4.5 RCT training program elements (i.e., selection, training process, continuing training, qualification) must be in accordance with the requirements of DOE Order 426.2.

3.5 Technical Staff Training

NOTE: *Technical staff personnel are typically involved in surveillance, testing, analyzing facility data, planning modifications, program review, and technical problem resolution in their area of expertise.*

3.5.1 Technical staff personnel who provide support to AMWTP nuclear operations are identified in MP-RTQP-14.20, Training Implementation Matrix, Appendix A, DOE Order 426.2 Positions.

3.5.1.1 This list also identifies the staff that has a direct impact on employee, facility, or public safety, as required by MP-RTQP-14.20.

NOTE: *The experience requirement for technical staff does not apply to an entry-level individual, provided the person does not perform work independently (signature authority, decision making, etc.) for activities that require qualification until the experience requirement is met.*

3.5.2 Technical staff shall meet the education and experience requirements as follows:

- Education: Baccalaureate in engineering or related science
- Nuclear experience: 1 year
- Job-related experience: 2 years
- Alternatives to education and experience are described in MP-RTQP-14.1.

NOTE: *Training for technical staff is based on less formal position analyses using Form-1978, Position Analysis, as described in MP-RTQP-14.1. Position analysis information may also be in existing program documentation or on Form-1244, Job Analysis and Task-to-Train Matrix.*

3.5.3 Technical staff training and qualification requirements shall be based on the position analysis and identified on their ITP.

3.5.3.1 Technical staff personnel are considered qualified by virtue of meeting the entry-level requirements associated with the position and by completing applicable facility-specific training.

3.5.3.2 Qualification checklists may be required for special positions or duties.

3.5.4 Training on the following topics shall be provided for entry-level technical staff personnel as determined by the position analysis:

- Facility organization
- Facility fundamentals
  - Heat transfer, fluid flow, and thermodynamics
  - Electrical science
  - Nuclear physics

- Chemistry/chemistry controls
- Process controls

- Facility systems, components, and operations
- Environment, Safety, and Health Orders
- Codes and standards overview
- Facility document system
- Facility authorization basis documents
- Nuclear criticality control
- Material, maintenance, and modification control
- ALARA and rad waste reduction program
- Quality Assurance/Quality Control practices.

NOTE: *Continuing training for technical staff may also include participation in continuing education courses, attending related professional organization conferences or seminars, or presentations/discussions at staff meetings*.

3.5.5 Continuing training shall be designed to reinforce, maintain, and improve skills and knowledge of technical staff personnel by providing information regarding applicable facility and industry events, major procedure changes, significant facility modifications, and continuing training on selected initial training topics, as appropriate.

3.5.6 Technical staff line management shall be responsible for providing topical input for the continuing training program.

3.5.7 Technical staff qualification will be maintained by participation in continuing training and satisfactory annual personal performance appraisal.

3.6 Qualification of Training Staff

3.6.1 Training staff are qualified in accordance with MP-RTQP-14.2, Training Staff Qualifications.

3.7 Qualification of Managers and Operations Management Personnel

NOTE 1: *Managers are considered qualified by virtue of meeting the entry-level requirements associated with the position and by completing applicable position-specific or facility-specific training and/or qualification.*

NOTE 2: *Training required for management is based on less formal position analyses using Form-1978, as described in MP-RTQP-14.1.*

NOTE 3: *Personnel may temporarily fill management/supervisor positions using a delegation of authority (maximum of 180 days). Management resources are available to support the individual as necessary.*

3.7.1 Manager training and qualification requirements shall be identified on their ITP.

NOTE: *Alternatives to education and experience are described in MP-RTQP-14.1.*

3.7.2 The AMWTP manager and operations management positions identified in MP-RTQP-14.20, Appendix A, are required to have a minimum of a baccalaureate degree in engineering or related science. Managers must have 4 years nuclear experience and operations managers must have 3 years job-related and 2 years nuclear experience.

3.7.3 The training manager shall have a baccalaureate including courses in education or training that focus on instructional analysis, design, development, delivery, and testing as well as evaluation of training programs if not included in the baccalaureate course material (baccalaureate need not be in engineering or related science).

3.7.4 The management training program shall include the following or equivalent in an ongoing professional development program:

- Supervisory skills training
- Quality assurance and quality control
- Facility security and emergency plans
- Purchasing
- Material storage
- Facility modifications (configuration control)
- Nuclear, industrial, and radiation safety
- Environmental issues
- Budgeting.

3.7.5 Operations management personnel shall be qualified.

3.7.5.1 Training shall be satisfactorily completed on applicable facility/process safety basis documents.

3.7.5.2 Training shall be provided on process knowledge to demonstrate operational knowledge of applicable facilities/processes.

3.8 Qualification of Supervisors

3.8.1 Supervisor training and qualification requirements shall be identified on their ITP.

NOTE: *Alternatives to education and experience are described in MP-RTQP-14.1.*

3.8.2 Supervisors shall meet the entry-level education and experience requirements as follows:

- Education: High school diploma
- Nuclear Experience: 3 years.

3.8.3 Shift supervisors must complete a qualification package to attain qualification for their positions.

3.8.4 The supervisory skills training program shall include the following or equivalent in an ongoing professional development program:

- Leadership
- Interpersonal communication
- Responsibilities and authority
- Motivation of personnel
- Problem analysis and decision making
- Fitness for duty procedures
- Administrative policies and procedures
- Conduct of operations
- Conduct of maintenance
- Conduct of selection, training, qualification and certification of personnel

- Work control process
- Management of personnel performance issues and performance appraisals.

3.9 Development of a Qualification Package

NOTE: *Qualification packages are used for operator, FMH, shift supervisor, maintenance, and technician positions at AMWTP to meet the formal qualification requirements of DOE O 426.2.*

3.9.1 The applicable manager shall request the Training Department and/or an SME to analyze the job and, from these analyses, develop a task list in accordance with MP-RTQP-14.6, Job Analysis, to determine training content.

3.9.1.1 General criteria shall be considered, including applicable QA plans, codes, regulations, and standards.

3.9.1.2 Specific criteria shall be used, including applicable QA project plans and implementing procedures.

3.9.1.3 In addition to this procedure, FMHs and fissile material handler supervisors (FMHSs) shall obtain certification per the FMH certification requirements listed in MP-RTQP-14.21.

3.9.1.4 The responsible work group (Maintenance, Operations, etc.) shall analyze each job position to determine the task responsibility of the position subject to the Quality Assurance Project Document.

(DOE/CBFO-94-1012)

NOTE: *Qualification packages or checklists developed prior to the effective date of Revision 19 of this procedure are not required to comply with the requirements of Step 3.9.2 until the qualification package or checklist is revised.*

3.9.2 Training Department: A qualification package and requalification package shall be developed for each operator, operator supervisor, technician, and maintenance position identified in MP-RTQP-14.20, Appendix A.

3.9.2.1 A cover sheet (not a part of the qualification package issued to the student) shall be used to identify:

- The qualification package title and number
- The current revision number
- A description of the qualification and who needs to complete the qualification
- Requalification frequency
- Any information needed to enter the qualification package in the training database
- All review and approval signatures.

3.9.2.2 The first page of the qualification package that will be issued to the student shall include the following:

- The qualification title and number
- A block for the employee's name and security number
- A block for the manager to sign granting qualification on completion of training in the qualification package
- A block for the plant manager or designee to endorse the employee is certified (this is only needed for positions requiring certification)
- Approval signatures of the Training manager and the manager responsible for the qualification
- A list of all attachments that must be submitted with the qualification package (e.g., written examinations, oral or walk-through examination sheets, remedial training forms, and exceptions).

NOTE: *The Knowledge Requirements section includes general discussions of safety basis and technical safety requirements (TSRs) that affect the position and general theory or operating principles that will improve understanding of the tasks performed in the position. Specialized training courses needed for the position are included. General training courses are not listed in the qualification package, but rather, on the ITP. Documents and procedures that need to be read and discussed with the supervisor or on-the-job training (OJT) instructor will be listed.*

3.9.2.3 The body of the qualification package shall contain the following sections:

- Revision/Modification Record
- Signature Roster
- Prerequisites
- Knowledge Requirements
- Training Objectives
- Examinations.

NOTE: *Medical information is maintained solely in the Occupational Health Manager software program, maintained by the AMWTP Industrial Safety and Industrial Hygiene Department.*

3.9.2.4 Unique prerequisites required for the qualification package shall be listed, including any required medical examination.

3.9.2.5 The Training Objectives section shall include the following:

3.9.2.5.1 Technician and maintenance personnel qualifications shall include performance demonstrations and assessments to ascertain their ability to adequately perform assigned tasks and be sufficiently comprehensive to cover areas fundamental to the job duties.

3.9.2.5.2 OJT training shall contain the following topics as applicable:

- Normal and emergency operating procedures pertinent to the job and general plant emergencies
- Administrative procedures
- Radiological control practices, including good personnel protection practices to maintain personnel exposure as low as reasonably achievable (ALARA) to radiation
- Exposure levels and the appropriate action to minimize exposures to chemicals, electromagnetic fields, toxic materials, or other personnel hazards
- Appropriate techniques for verifying the position of facility components
- Utilization of appropriate monitoring instruments when required
- Conduct of operations
- Locations and functions of pertinent safety systems and equipment
- Procedures for making changes or alterations in operations or operating procedures
- TSRs, as required.

3.9.2.6 The examination section of the qualification package shall list the examinations that are required to be completed and provide space to document successful completion.

3.9.2.6.1 Qualification of operators and their immediate supervisors shall include examinations (written, oral, operational evaluations), as applicable to the position.

3.9.2.6.2 Initial qualification shall include a comprehensive written examination.

3.9.2.6.3 Comprehensive written examinations and operational evaluations (consisting of a walkthrough and oral examination) are required for the certified positions of FMH andFMHS.

3.10 Qualification/Certification Process

3.10.1 Assignment of Job Duties

3.10.1.1 The applicable manager shall review and update the employee's EPD (per MP-RTQP-14.1), to include the new duties being assigned and verify the employee has the required education and experience for the position.

3.10.1.2 The applicable manager shall update the employee's ITP (per MP-RTQP-14.1) to ensure the training courses and qualification packages/checklists align with the new qualification.

(LST-RTQP-03-IM)

3.10.2 Qualification of the Candidate

3.10.2.1 The candidate shall successfully complete all of the necessary training requirements listed in the qualification package.

3.10.2.2 The candidate shall demonstrate operational proficiencies listed in the performance demonstration sections of the qualification package per MP-RTQP-14.13, Performance Assessments.

3.10.2.3 The candidate shall complete a qualification examination associated with each qualification package, when required, with a minimum score of 80%.

3.10.2.4 The candidate shall complete an interview with a shift supervisor, plant shift manager, or appropriate manager.

NOTE: *The date signed is the effective date of the qualification.*

3.10.2.5 The appropriate manager shall sign and date the cover of the qualification package granting qualification.

3.10.2.5.1 If the qualification package or checklist has not been updated to include the manager's signature to grant qualification on the cover, Form-1657, Qualification/Certification Endorsement, may be used.

3.10.2.6 For certified positions, the plant manager or designee shall sign the cover endorsing the candidate for the position in accordance with MP-RTQP-14.21.

3.10.2.7 Written examinations must be administered to certified operator candidates (fissile material handlers). These examinations must contain a representative selection of questions on the knowledge and skills identified from learning objectives developed from the analysis of the job and from information in Documented Safety Analysis, Technical Safety Requirements, system description manuals and operating procedures, lessons learned from Occurrence Reports, and other applicable sources.

3.10.2.8 Written examinations must be administered to certified supervisor candidates. These examinations must be based on the sources discussed in Section 3.2.7. The examination must include a representative sampling from the following items, in addition to those required for certified operators, as appropriate to the position and to the facility.

1. Design, control, and operating limitations for the nuclear facility, including instrumentation characteristics and adjustment, nuclear facility operation, and nuclear facility console control mechanisms

2. Radiation hazards that may arise during the performance of experiments

3. Nuclear and radiation theory, including details of the fission process, neutron multiplication, source effects, and neutron poison effects

4. Procedures and limitations involved in initial equipment loading, alterations in fissile material configuration, and determination of various internal and external effects on criticality safety

5. Procedures, equipment, and facilities available for handling and disposing of radioactive materials and effluent

6. Functions, assignments, and responsibilities of the maintenance and technical support organizations as related to nuclear facility safety

7. Applicable portions of the facility Documented Safety Analysis.

NOTE: *AMWTP evacuation drills are not considered operational drills.*

3.10.2.9 Operational drills conducted in the facility must be provided at least biennially for certified operators and supervisors.

3.10.2.10 FMHs and FMHSs shall receive instruction in the use of facility systems to control or mitigate accidents. Such training must include both classroom-type training and training conducted in the facility.

3.10.2.11 Personnel who are responsible for developing and delivering training may be excused from continuing training for the area of primary administrative responsibility.

3.11 Requalification and Recertification Requirements

3.11.1 Personnel (including operations, maintenance, and technical support personnel) may be requalified by management upon completion of the continuing training program, including requisite examinations (written, oral, and operational/performance).

3.11.2 Requalification/certification is required in a 2-year continuing training cycle for operators, operator supervisors, technicians, and maintenance personnel as listed in MP-RTQP-14.20, Appendix A.

3.11.3 Personnel and their immediate supervisors must not be allowed to continue to function in qualified or certified positions if they have not completed all of the requalification or recertification program elements within the 2-year continuing training cycle.

3.11.4 Extensions may be granted in accordance with MP-RTQP-14.3, Training Exceptions, Exemptions, and Extensions.

3.11.5 Requalification must include requisite examinations. This may be achieved by either administering a comprehensive biennial requalification examination, including any operational evaluations or performance demonstrations that may be specified, or by administering periodic examinations (e.g., quarterly) during the requalification cycle.

3.11.6 Operational evaluations must require FMHs and FMHSs to demonstrate an understanding of and the ability to perform a representative sampling of the control manipulations applicable to the position and the facility.

3.11.7 When a qualified or certified individual has been absent from duties for greater than 3 months, but less than 12 months, selected retraining (including written and oral examinations and operational/performance evaluations, as deemed necessary) must be given prior to reassignment to duties.

3.11.7.1 The qualification or certification base date remains the same as it was before the absence.

3.11.8 When a qualified or certified individual has been absent for greater than 12 months, comprehensive written and oral examinations and operational/performance evaluations (as required of initial candidates) must be given to determine weak areas. Retraining and reexamination must be required in area of weakness, and upon successful completion, a new qualification or certification date may be established.

3.11.9 Requalification requirements shall be defined in a requalification package developed consistent with the requirements in Section 3.9.

(HWMA/RCRA TSA IS Document; HWMA/RCRA Permit)

3.11.10 The employee's manager shall approve requalification upon successful completion of the requalification package.

3.11.11 The plant manager or designee shall endorse recertification for FMHs and FMHSs in accordance with MP-RTQP-14.21.

3.12 Changing Qualification Package Training Requirements

NOTE: *Qualification package modifications and revisions are initiated by site personnel for a host of reasons, including:*

- *Adding or removing OJT*
- *Adding or removing initial training*
- *Making editorial changes*
- *Providing clarification of or change of operation procedure in an OJT section, reflecting changes to the facility, Documented Safety Analysis, TSRs, procedures, regulations, and applicable industry operating experience, etc.*

3.12.1 A qualification package revision is required when training objectives have changed.

3.12.2 A modification is used for correction of typographical errors, clarifications, and other changes that do not affect the training objectives.

3.12.2.1 Revisions and modifications to qualification packages or checklists shall be completed in accordance with the directions in MP-RTQP-14.9, Instructional Materials Development, Revision, and Control.

3.12.2.2 Qualification package revisions shall be implemented by an Instructional Analyst/Developer (IA/D), reviewed by the SME, and approved by the Training manager and appropriate manager.

3.12.2.3 The IA/D will prepare an addendum to the qualification package for qualified employees to complete new training requirements or new OJT.

3.12.2.3.1 The addendum is prepared in conjunction with the qualification package revision for concurrent review and approval.

3.12.2.3.2 A standardized format will be used and a unique admin form number will be assigned for tracking completion in the training database.

3.12.2.3.3 The responsible manager will assign the addendum to qualified employees and will designate the time period for completion of the addendum.

3.12.2.3.4 When completed, the addendum will be attached to the qualification package in the employee's file.

3.13 Disqualification

3.13.1 Any employee qualified or certified using a qualification package or checklist may be disqualified for the following reasons:

- Medical reasons
- Fails a requalification or recertification examination
- Shows job performance deficiency
- Performs work in an unsafe manner
- Fails to complete addendum(s) within assigned time period
- Expiration of a qualification package.

3.13.1.1 If the employee is disqualified due to medical reasons, the individual is not allowed to perform related duties until medically cleared and other requalification/recertification requirements are verified current.

3.13.1.2 If the employee fails a requalification or recertification examination, remedial training shall be assigned that is designed to correct the deficiency.

3.13.1.2.1 The remedial training shall be documented on Form-1039, Remedial Training Program Form.

3.13.1.2.2 Requalification or recertification is not granted until the examination, required qualification packages, and operational evaluations/walkthroughs are retaken and passed.

3.13.1.3 If the employee shows job performance deficiency, a remedial training plan shall be developed using Form-1039.

NOTE 1: *If the manager identifies a widespread performance deficiency, a training needs analysis should be performed in accordance with MP-RTQP-14.24, Training Needs Analysis.*

NOTE 2: *Items that were "excepted" in their training become part of the needed remedial training program.*

3.13.1.3.1 Requalification shall require remedial training designed to correct the deficiency.

3.13.1.4 If the employee performs work in an unsafe manner, the reason the unsafe actions were performed, shall be determined.

3.13.1.4.1 If the reason is determined to be a performance deficiency, a remedial training plan shall be developed using Form-1039.

3.13.1.4.2 If the reason is determined not to be a performance deficiency, the matter shall be dispositioned in accordance with company policies.

3.13.1.4.3 Requalification requires remedial training designed to correct the deficiency.

3.13.1.5 If the employee's qualification has expired, the employee shall be supervised and expired recurring qualification shall be completed prior to independent assignment.

3.13.2 Any time an employee is disqualified, limitations are placed on a qualification, or a qualification is reinstated, the manager must submit Form-1902, Change in Qualification Status, to the training manager.

- Responsible manager—evaluates if disqualification is required or if the employee may perform the duties with reasonable limitations.
- Training manager—reviews the change in qualification status to determine what changes to the employee's training file are needed and/or if remedial actions have been planned.
- Training manager—signs concurrence on Form-1902.
- Training coordinator—updates the employee's training file and the training database.

3.14 Qualification Checklists

3.14.1 Qualification checklists may be developed for equipment operation or for positions or duties that do not require formal qualification per DOE O 426.2.

3.14.2 The format and content should be developed using the graded approach to the process defined in Section 3.9.

3.14.3 The periodicity of the qualification checklist is determined and documented during the job analysis.

3.14.3.1 Requalification requirements are also documented in the analysis.

3.14.4 Written examinations are not required for checklists, but may be included if needed.

3.15 Proficiency Program for Fissile Material Handler Qualified Personnel

3.15.1 Proficiency for FMH-certified personnel is defined in MP-RTQP-14.21.

4.0 DEFINITIONS

Graded approach. A process by which the level of analysis, documentation, and actions necessary to comply with a requirement are commensurate with: (1) the relative importance to safety, safeguards, and security; (2) the magnitude of any hazard involved; (3) the life cycle stage of the facility; (4) the programmatic mission of the facility; (5) the particular characteristics of the facility; and (6) any other relevant factor.

Individual training plan. A description of the required training pertaining to an employee's job function.

Qualification. Qualification is defined in terms of education, experience, training, examination, or any special requirements for performance of assigned responsibilities.

Qualified Watch List. An application available through TRAIN Reports under the Watch List function that enables AMWTP employees to verify training completion and qualification status.

Safety Significant systems, structures, and components. Systems, structures, or components, designated as having a safety function that reduces the risk of exposure to on-site workers from postulated accidents evaluated in the Documented Safety Analysis.

Systematic approach to training. Systematic process of analyzing, designing, developing, implementing, and evaluating training process to achieve performance-based training programs.

Training program. A planned, organized sequence of activities designed to prepare individuals to perform their jobs, to meet a specific position or classification need, and to maintain or improve their performance on the job.

5.0 REFERENCES

(1) 10 CFR 835, Occupational Radiation Protection

(2) AMWTP HWMA/RCRA Permit

(3) AMWTP HWMA/RCRA TSA Interim Status Document

(4) DOE/CBFO-94-1012, U.S. DOE Carlsbad Field Office Quality Assurance Program Document

(5) DOE HDBK-1118-99, Guide to Good Practices for Continuing Training

(6) DOE HDBK-1122-99, Radiological Control Technician Training

(7) DOE O 426.2, Personnel Selection, Training, Qualification, and Certification Requirements for DOE Nuclear Facilities

(8) DOE-STD-1098-2008, Radiological Control

(9) Form-1039, Remedial Training Program Form

(10) Form-1244, Job Analysis and Task-to-Train Matrix

(11) Form-1657, Qualification/Certification Endorsement

(12) Form-1902, Change in Qualification Status

(13) Form-1978, Position Analysis for Technical Staff

(14) Form-2159, 24-Hour HAZWOPER Checklist (0AWT2510)

(15) Form-2160, 8-Hour HAZWOPER Refresher Checklist (0AWT2525)

(16) LST-RTQP-03-IM, WIPP Training Requirements Implementation Matrix

(17) MP-ADMN-1.6, AMWTP Recruitment, Selection, and Hiring of Personnel

(18) MP/DOCS-18.2, Records Management

(19) MP-RTQP-14.1, Preparation and Administration of Training Plans

(20) MP-RTQP-14.2, Training Staff Qualifications

(21) MP-RTQP-14.3, Training Exceptions, Exemptions, and Extensions

(22) MP-RTQP-14.6, Job Analysis

(23) MP-RTQP-14.9, Instructional Materials Development, Revision, and Control

(24) MP-RTQP-14.13, Performance Assessments

(25) MP-RTQP-14.20, Training Implementation Matrix

(26) MP-RTQP-14.21, Criticality Safety Training

(27) MP-RTQP-14.24, Training Needs Analysis

(28) MP-TRUW-8.1, Certification Plan for INL Transuranic Waste

(29) MP-TRUW-8.2, Quality Assurance Project Plan

(30) RPT-DSA-02, Documented Safety Analysis

6.0 RECORDS

Records generated by this procedure are classified in accordance with the table below and dispositioned in accordance with MP-DOCS-18.2, Records Management.

Record Description	Classification
MP-RTQP-14.4 Case File	Nonpermanent/WIPP ENV1-J-1/ Destroy 10 years after submittal
Employee and subcontractor personnel qualification documentation	Facility Operating Record (FOR) and NP WIPP/ENV2-a-1-a/ Destroy 5 years after Life of Facility
Form-1039, Remedial Training Program Form	FOR and NP WIPP/ENV2-a-1-a/ Destroy 5 years after Life of Facility
Form-1657, Qualification/Certification Endorsement Form	FOR and NP WIPP/ENV2-a-1-a/ Destroy 5 years after Life of Facility
Form-1902, Change in Qualification Status	FOR and NP WIPP/ENV2-a-1-a/ Destroy 5 years after Life of Facility
Form-2159, 24-Hr HAZWOPER Checklist	FOR and NP WIPP/ENV2-a-1-a/ Destroy 5 years after Life of Facility
Form-2160, 8-Hr HAZWOPER Refresher Checklist	FOR and NP WIPP/ENV2-a-1-a/ Destroy 5 years after Life of Facility

7.0 EXHIBITS

None

8.0 APPENDICES

None

Job Analysis

Advanced Mixed Waste Treatment Project

Approval:

(*Signature on file. See DCR-12955.*) 12/04/13

Date

AMWTP MANAGEMENT PROCEDURE		
MP-RTQP-14.6, Rev. 10	Issued: 12/04/13	Effective: 12/05/13
Job Analysis		

REVISION LOG

Revision Number	Date Approved	Pages Affected	Description of Revision
0	8/8/02	All	Initial issue. MP-RTQP-14.6; Job and Training Needs Analysis.
1	01/06/03	5 10 Exhibit A	Section 3.0; Made definitions generic in all training procedures Section 4.1.4; Added list of Tech Staff Positions Added Revised Sample Form-1244
2	2/25/2004	4, 13, 14, 15, A-1, A-2, A-3	Section 2.0, References: Changed "DOE ORDER 5480.20A Section I.7.b. (1)" to "DOE Order 5480.20A, Personnel Selection, Qualification and Training Requirements for DOE Nuclear Facilities" Added DOE Order 5480.19, Conduct of Operations Requirements for DOE Facilities Section 4.3.1: Changed "Training Action Form" to "Training Request Form" Section 5.0: In the "Classification" Column, replaced all "Permanent/ Quality Record" with "Non-permanent/Quality Record." Removed Columns "Uniform File Code," "Disposition Authority," and "Retention Period." In the Record Description Column, replace "Training Action Form" with "Training Request Form." Replaced "AMWTP-1244, Job Analysis Form" with "Advanced Mixed Waste Treatment Project Task Analysis, AMWTP Form-1244." Section 6.0: Deleted "A. Sample Job Analysis Summary form AMWTP-1244." Reassigned "Performance Analysis Flowchart" and "Training Needs Analysis Flowchart" "A" and "B," respectively. Removed Exhibit A, Sample Form-1244.

AMWTP MANAGEMENT PROCEDURE		
MP-RTQP-14.6, Rev. 10	Issued: 12/04/13	Effective: 12/05/13
Job Analysis		

Revision Number	Date Approved	Pages Affected	Description of Revision
3	06/17/04	Various	DCR-3104. Update formatting to standard. Minor editorial changes.
4	02/22/05	Page 7	DCR-4165 Resolution to CAR-7142 Added the following positions to step 4.1.4.1 Radiological Engineer, Maintenance Engineer, Design Engineer, Process Engineer, IT/Network Engineer, and Criticality Safety Engineer.
5	9/12/05	ALL	DCR-4263. Change title of this document from 'Training and Job Needs Analysis' to 'Job Analysis.' This is a major revision to implement BBWI training program at AMWTP. Incorporate Transition requirements (including logo, etc. changes as listed on DCR-4299. Revise Form-1244, Job Analysis Task Listing. Create new Form-1636.
6	06/08/09	All	DCR-8409. Periodic review date due. Change review date and roll rev.
7	08/23/12	Various	DCR-11539. Revised as part of ISMS update and for DOE O 426.2 implementation. Incorporated ITG-BLUESHEET-137 and DOCS-BLUESHEET-09.
8	10/17/12	Step 3.2.4 & Section 5.0	DCR-11778. Added LST-RTQP-03-IM as a rolldown to add requirement and included it in reference section.
9	05/31/13	Various	DCR-12375. Revisions to incorporate requirements identified for implementation of ISMS Phase II. Resolution to CAR-77056.
10	12/04/13	Various	DCR-12955. Incorporated changes from the 1070 assessment (Action Item 77120). Made editorial changes for consistency in procedure.

TABLE OF CONTENTS

1.0 PURPOSE/SCOPE 1

2.0 ROLES AND RESPONSIBILITIES 1

3.0 PROCEDURE.....1

3.1 Instructions.....1

4.0 DEFINITIONS.....3

5.0 REFERENCES 4

6.0 RECORDS 4

7.0 EXHIBITS 4

8.0 APPENDICES 4

AMWTP MANAGEMENT PROCEDURE		
MP-RTQP-14.6, Rev. 10	Issued: 12/04/13	Effective: 12/05/13
Job Analysis		

1.0 PURPOSE/SCOPE

This procedure provides guidance for the process of performing a new *job analysis* (see def.) or modifying an existing one, per the systematic approach to training model. This procedure applies to the operator, operator supervisor, and technician positions identified in MP-RTQP-14.20, Training Implementation Matrix. This process may be applied to other job functions as determined by line and training management.

2.0 ROLES AND RESPONSIBILITIES

Performer	Responsibilities
Instructional Analysis/Developer (IA/D)	• Develops the job analysis • Identifies key elements of tasks.
Line Manager (see def.)	• Approves the job analysis.

3.0 PROCEDURE

3.1 Instructions

3.1.1 IA/D: Review the information provided by the requestor (e.g., on Form-1672, Training Needs Analysis Report, or on Form-1010, Training Request Form).

3.1.2 Gather any related information such as regulations, contract, procedures, discussion with *subject matter experts* (SMEs; see def.), etc.

3.1.3 Select the appropriate SMEs and/or supervisors of the *job incumbents* (see def.).

3.1.3.1 Brief these selected individuals on the process used to complete/modify a job analysis.

3.1.3.2 Record the names and position titles of these selected individuals on Form-1244, Job Analysis and Task-to-Train Matrix.

3.1.4 Facilitate these individuals in identifying the new or modified (includes deleted) tasks the incumbents would be assigned to complete as a normal part of their job assignment and in identifying physical demands for routine and emergency job functions.

(DOE O 426.2; LST-RTQP-03-IM)

NOTE: *DOE HDBK-1076, Table Top Job Analysis, or DOE HDBK-1078, Training Program Handbook: A Systematic Approach to Training, provides a reference for performing job analyses, as needed.*

3.1.4.1 Perform a job analysis and record the tasks in terms of *observable behaviors*, (see def.), on Form-1244.

3.1.4.1.1 If job functions require team solutions and activities, then include team training of personnel in the analysis, stressing team communications and interactions.

3.1.4.2 Use Form-1244, as needed, to document training requirements for tasks identified in previous step.

3.1.4.2.1 Determine which tasks are selected for initial training (*train*; see def.), continuing training (*over train*; see def.), no training (*no train*; see def.), and pre-training (*pre-train*; see def.) considering the difficulty, importance and frequency of the tasks.

NOTE 1: *The following section only applies to new job analyses conducted after September 2013 and to modified job analyses to the degree appropriate.*

NOTE 2: *DOE HDBK-1078 provides a reference, as needed, to analyze tasks.*

NOTE 3: *Good references to determine* task key elements *(see def.) are RPT-DSA-02, Documented Safety Analysis; RPT-TSR-03, Technical Safety Requirements; system description manuals; and operating procedures, as applicable.*

3.1.5 Line Manager: Approve the Job Analysis by signing Form-1244, as applicable.

3.1.6 IA/D: Analyze the tasks (*task analysis*; see def.) selected as training or over train to identify the key elements.

3.1.7 Use the identified key elements as part of the design process described in MP-RTQP-14.7, Designing Courses.

4.0 DEFINITIONS

Job analysis. Lists the tasks necessary for successful performance of jobs and identifies those tasks selected for initial and continuing training.

Job incumbents. Personnel normally assigned to the job being analyzed.

Line manager. The individual responsible for ensuring that applicable training is assigned and completed before employees perform work. Provides input to and approves the job analysis.

No train. Do not interpret to mean that no training at all is required. It means no formal training (refer to train) is necessary; the task can be learned on the job.

Observable behavior. Physical actions the trainee performs on the job that can be seen and evaluated.

Over train. Provide a combination of formal training plus periodic practice of the task (retraining).

Pre-train. Provide formal training immediately before the need to perform the task because performance is infrequent but task is difficult.

Subject matter experts. Those qualified (or previously qualified) and experienced in performing a particular task. A subject matter expert may also be one who, by education, training and/or experience, is a recognized job incumbent familiar with a particular subject, topic, or system.

Task analysis. The process to identify key elements of a task selected as train or over training.

Task key element. An element of a task that allows identification of knowledge and/or skills to successfully perform the task element.

Train. Provide a combination of formal training (for example, classroom, on-the-job, drills, and/or simulators).

5.0 REFERENCES

(1) DOE Order 426.2, Personnel Selection, Training, Qualification, and Certification Requirements for DOE Nuclear Facilities

(2) DOE-HDBK-1076-94, Table Top Job Analysis

(3) DOE-HDBK-1078, Training Program Handbook: A Systematic Approach to Training

(4) Form-1010, Training Request Form

(5) Form-1672, Training Needs Analysis Report

(6) LST-RTQP-03-IM, WIPP Training Requirements Implementation Matrix

(7) MP-RTQP-14.7, Designing Courses

(8) MP-RTQP-14.20, Training Implementation Matrix

(9) RPT-DSA-02, Documented Safety Analysis

(10) RPT-TSR-03, Technical Safety Requirements

6.0 RECORDS

Records generated by this procedure are classified in accordance with the table below and dispositioned in accordance with MP-DOCS-18.2, Records Management.

Record Description	Classification
MP-RTQP-14.6, Job Analysis, Case File	Misc. Other Records/A16-1.2/Destroy 5 years after submittal
Form-1244, Job Analysis Task Listing and Task-to-Train Matrix	Both FOR and NP-WIPP-ENV2-a-1-a/Destroy 5 years after submittal

7.0 EXHIBITS

None

8.0 APPENDICES

None

Training Program Evaluation

Advanced Mixed Waste Treatment Project

Approval:

(*Signature on file. See DCR-11957.*) 05/29/13

Date

AMWTP MANAGEMENT PROCEDURE		
MP-RTQP-14.16, Rev. 8	Issued: 05/30/13	Effective: 05/31/13
Training Program Evaluation		

REVISION LOG

Revision Number	Date Approved	Pages Affected	Description of Revision
0	8/8/02	All	Initial issue. MP-RTQP-14.16; "Training Program Evaluation"
1	2/24/04	4, 7-11	Section 2.0, References: Added BNFL-5232-RPT-ESH-02, "Documented Safety Analysis for Retrieval Operations;" BNFL-5232-RPT-ESH-03, "Technical Safety Requirements for Retrieval Operations;" 10 CFR 830, "Nuclear Safety Management", Subpart A, "General Provisions". Section 4.1.2.1.1: Delete "Form" from "Instructor Evaluation Form." Section 5.0: In the "Classification" Column, replaced all "Permanent Quality" with "Non-permanent/Quality Record." Removed Columns "Uniform File Code," "Disposition Authority," and "Retention Period." In the Record Description Column, changed "Oral Examination Record" to "Oral/Walkthrough Examination Record." In the Record Description Column, deleted "Form" from "Instructor Evaluation Form." Section 6.0: Removed Sections 6.1 and 6.2. Removed Instructor Evaluation (AMWTP Form-1223) and Training Facility and Material Evaluation Form (AMWTP Form-1224).
2	06/17/04	Various	DC-3111. Update formatting to standard.

AMWTP MANAGEMENT PROCEDURE		
MP-RTQP-14.16, Rev. 8	Issued: 05/30/13	Effective: 05/31/13
Training Program Evaluation		

Revision Number	Date Approved	Pages Affected	Description of Revision
3	09/21/05	All	DCR-4203. Incorporate current MP-DOCS-18.3 formatting requirements. AI 8678 Define the process to review trainee classroom evaluations and initiate improvements to training programs. CAR 13079 - Describe the process for evaluating training programs Update Form-1224, and change title to: Training Evaluation and Comments
4	02/12/08	2/3.1.1.1 Section 6.0	Change requirement to periodic QA evaluations of the Training Program. Corrected Records Section.
5	06/08/09	All	DCR-8410. Periodic review date due. Change review date and roll rev. Incorporate Bluesheet-03.
6	08/29/12	Various	DCR-11508. Incorporated DOE O 426.2 changes.
7	10/17/12	Pg 1 and Section 5.0	DCR-11779. Added LST-RTQP-03-IM as a rolldown to add requirement and included it in reference section.
8	05/29/13	Various	DCR-11957**.** Changed to incorporate requirements identified for implementation of ISMS Phase II. Resolves CAR 77049.

AMWTP MANAGEMENT PROCEDURE		
MP-RTQP-14.16, Rev. 8	Issued: 05/30/13	Effective: 05/31/13
Training Program Evaluation		

TABLE OF CONTENTS

1.0 PURPOSE/SCOPE 1

2.0 ROLES AND RESPONSIBILITIES....1

3.0 PROCEDURE....2

3.1 Program Evaluation 2

3.2 Training Facility and Material Evaluation 4

3.3 Informal Training Program Evaluations 5

4.0 DEFINITIONS....5

5.0 REFERENCES 5

6.0 RECORDS....6

7.0 EXHIBITS....6

8.0 APPENDICES 6

AMWTP MANAGEMENT PROCEDURE		
MP-RTQP-14.16, Rev. 8	Issued: 05/30/13	Effective: 05/31/13
Training Program Evaluation		

1.0 PURPOSE/SCOPE

This procedure describes the methods of performing evaluations of training programs governed by DOE O 426.2, Personnel Selections, Training, Qualification, and Certification Requirements for DOE Nuclear Facilities. Evaluation of training programs not required to meet DOE O 426.2 should be conducted using this procedure as a good management practice. Training evaluation should employ a *graded approach*, (see def.), as appropriate.

(DOE O 426.2)

Training program evaluations are conducted to provide reasonable assurance that training programs are producing competent employees capable of performing their work safely and efficiently. Training evaluations document the continuous assessment of training programs (i.e., lesson plans, qualification processes, qualification packages, qualification checklists, etc.), to increase their effectiveness and ensure that the training programs are kept up-to-date in dynamic work processes.

Qualification and certification programs are reviewed by facility management and maintained to reflect changes to the facility, RPT-DSA-02, Documented Safety Analysis; RPT-TSR-03, Technical Safety Requirements; procedures; regulations; and applicable industry operating experiences.

(DOE O 426.2; LST-RTQP-03-IM)

2.0 ROLES AND RESPONSIBILITIES

Performer	Responsibilities
Responsible Manager or Designee	• Reviews training and qualification programs to ensure training programs convey all the required skills and knowledge.
Training Manager	• Schedules training program evaluations per MP-M&IA-17.1, Management Assessment • Ensures training staff assigned to perform training evaluations are qualified • Reviews trainee classroom evaluations and follow-up with corrective actions as applicable.

3.0 PROCEDURE

3.1 Program Evaluation

3.1.1 Planning and Conducting the Training Program Evaluation

NOTE 1: *QAPP-01, Quality Assurance Program Plan, requires periodic quality assurance (QA) assessments of the Training Program.*

NOTE 2: *QAPP-01 also requires training management to perform management assessments per MP-M&IA-17.1.*

NOTE 3: *DOE O 426.2 requires periodic reviews and facility or process change reviews of MP-RTQP-14.20, Training Implementation Matrix, to ensure that the document is applicable to current facility conditions.*

3.1.1.1 Training Manager: Ensure periodic systematic evaluations of training and qualification programs are conducted (not to exceed 3 years) in accordance with HDBK-1070-94, Guidelines for Evaluation of Nuclear Facility Training Programs.

3.1.1.1.1 Include the training implementation matrix in these reviews to ensure the document reflects current facility conditions and meets the requirements of DOE O 426.2.

NOTE: *The evaluation may consist of one overall review or be conducted incrementally over a period of time.*

3.1.1.2 Training Manager: Schedule and conduct comprehensive training program evaluations as management assessments in TrackWise system per MP-M&IA-17.1.

3.1.1.3 Ensure that evaluations of training programs are conducted by qualified individuals or a team.

3.1.1.4 Training Manager: Develop the scope of the evaluation as follows:

3.1.1.4.1 Develop objectives for the evaluation, using objectives from DOE-STD-1070-94, ensuring they identify expected program processes defined by procedure or DOE O 426.2.

3.1.1.4.2 Evaluate instructional skills and technical competency of instructors on a regular basis.

3.1.1.4.3 Use feedback from trainee performance during training to evaluate and refine the training programs.

3.1.1.4.4 Conduct interviews with personnel working in the field to evaluate and refine the training program.

3.1.1.4.5 Training Instructors: Perform in the field observations (recommended minimum of 4 hours per month) of actual work being performed to evaluate and refine the training program.

3.1.1.4.6 Document field observations Form-2126, Training Field Observation.

3.1.1.4.7 Training Manager: Review Form-2126.

3.1.1.4.8 Monitor change actions (procedure changes, equipment changes, facility-specific and lessons learned) and evaluate for their applicability to both initial and continuing training programs and incorporate in a timely manner.

3.1.1.4.8.1 Evaluate changes in job scope to determine the need for revisions to initial and continuing training programs (refer to MP-RTQP-14.17, Training Requests).

3.1.1.4.9 Initiate, evaluate and track improvements/changes to initial and continuing training to correct training deficiencies and performance problems (refer to MP-RTQP-14.17).

3.1.1.4.10 Maintain current training materials based upon the results of training program evaluations (refer to MP-RTQP-14.17).

3.1.1.4.11 Evaluate training facilities and materials to determine if they are conducive to the learning process.

3.1.1.4.12 Training Management, Line Organization Supervision, or Peers: Perform an evaluation of an instructor's performance, at a minimum of once a year, in a setting in which he or she trains or assesses.

3.1.1.4.12.1 Evaluate the instructor against an established set of criteria and use the results to improve instructor performance (refer to MP-RTQP-14.2, Training Staff Qualification).

3.2 Training Facility and Material Evaluation

NOTE: *Trainees are encouraged to fill out Form-1224, Training Evaluation and Comments, provided by the instructor at the end of a course, per MP-RTQP-14.11, Delivery of Training.*

3.2.1 Training Manager or designee: Review the Training Evaluation and Comments forms (Form-1224).

3.2.1.1 Evaluate constructive (positive or negative) comments to determine if an opportunity for improvement exists.

3.2.1.2 Ensure materials are changed from feedback when warranted.

3.3 Informal Training Program Evaluations

3.3.1 Responsible Manager or Designee: Review task lists, task-to-training matrix, qualification packages, qualification checklists, or classroom training to ensure they reflect current procedures, controls, or operating requirements.

3.3.2 Periodically observe training activities associated the qualification and/or certification programs to ensure training being provided support desired performance.

3.3.2.1 Notify the Training Department when weaknesses are identified using Form-1010 or other communication (e.g., verbal, e-mail, etc.).

4.0 DEFINITIONS

Documentation. Refers to any handwritten, printed, or electronic document or file or any electronic database or depository where information is stored for retrieval (for example, TRAIN training records database).

Graded approach. A process by which the level of analysis, *documentation,* (see def.), and actions necessary to comply with a requirement are made commensurate with: (1) the relative importance to safety, safeguards, and security; (2) the magnitude of any hazard involved; (3) the life cycle stage of a facility; (4) the programmatic mission of a facility; (5) the particular characteristics of a facility; and (6) any other relevant factor.

5.0 REFERENCES

(1) DOE O 426.2, Personnel Selection, Training, Qualification, and Certification Requirements for DOE Nuclear Facilities

(2) DOE-STD-1070-94, Guidelines for Evaluation of Nuclear Facility Training Programs

(3) LST-RTQP-03-IM, WIPP Training Requirements Implementation Matrix

(4) MP-M&IA-17.1, Management Assessment

(5) MP-RTQP-14.2, Training Staff Qualification

(6) MP-RTQP-14.11, Delivery of Training

(7) MP-RTQP-14.17, Training Requests

(8) MP-RTQP-14.20, Training Implementation Matrix

(9) QAPP-01, Quality Assurance Program Plan

(10) RPT-DSA-02, Documented Safety Analysis

(11) RPT-TSR-03, Technical Safety Requirements

6.0 RECORDS

Records generated by this procedure shall be classified per the table below and dispositioned per MP-DOCS-18.2, Records Management.

Record Description	Classification
MP-RTQP-14.16, Training Program Evaluation, Case File	Nonpermanent WIPP/ENV1-J-1/Destroy 10 years after submittal
Form-1224, Training Evaluation and Comments	Nonpermanent WIPP/ENV1-J-1/Destroy 10 years after submittal
Form-1010, Training Request Form	Nonpermanent WIPP/ENV1-J-1/Destroy 10 years after submittal
Form-2126, Training Field Observation	Nonpermanent WIPP/ENV1-J-1/Destroy 10 years after submittal

7.0 EXHIBITS

None

8.0 APPENDICES

None

Training Records Administration

Advanced Mixed Waste Treatment Project

Approval:

(*Signature on file. See DCR-12774.*) 10/16/13

Date

REVISION LOG

Revision Number	Date Approved	Pages Affected	Description of Revision
0	08/08/02	All	Initial issue. MP-RTQP-14.19; Training Records Administration
1	01/09/03	4 5 6 & 7	Added reference to 10CFR830 Subpart A and CAO-94-1012 Added CAO-94-1012 and MP-DOCS-18.2 to Section 4.1.1 Added HWMA/RCRA Requirements to Sections 4.1.2; 4.1.3; 4.1.4; 4.2.4; and 4.2.5
2	06/22/04	Various	DCR-3113. Update formatting to standard, minor editorial changes. Step 4.1.2, Remove first bullet. Step 4.3.6, Delete Step. Step 4.3.7: Change to read: "If a training record is lost or damaged beyond recovery, place a signed and dated letter, or copy, in the individual file that describes the record and the circumstances leading to the loss or damage." Add HWMA/RCRA Treatment Permit Driver.
3	9/12/05	All	DCR-4333. Rewrite document to incorporate requirements due to new contractor, including blue sheet requirements identified in DCR-4299. Incorporate formatting changes to update to MP-DOCS-18.3. AI 12234 Implement WIPP QAPD CBFO-94-1012, DOE CBFO Quality Assurance Program Plan, Step 1.5.6.1.K. Measures shall be taken to provide for replacement, restoration, or substitution of lost or damaged records.
4	6/14/06	1	DCR-5096. Correcting the section title 1.0 to "Purpose/Scope" per MP-DOCS-18.3 formatting requirements.
5	06/15/09	Various	DCR-8159. Rewrite to clarify training records management processes to address issues from CAR 41818.
6	08/29/12	Various	DCR-11503. Incorporated DOC O 426.2 and organization and ITP and location changes.

7	11/07/12	Various	DCR-11769. Added the ITG and WIPP training requirements matrixes to document.
8	05/30/13	Various	DCR-12382. CARs 77060 and 77066. Incorporated requirements identified for implementation of ISMS Phase II.
9	10/16/13	Various	DCR-12774. Removed requirement for EPD and ITP to be stored in employee files. Edited for consistency and company standards.

TABLE OF CONTENTS

1.0 PURPOSE/SCOPE 1

2.0 ROLES AND RESPONSIBILITIES 1

3.0 PROCEDURE 2

3.1 Specific Requirements 2

3.2 Training Records Management 4

3.3 Storage and Maintenance of Training Records 7

3.4 Records and Record Retention 8

4.0 DEFINITIONS 9

5.0 REFERENCES 10

6.0 RECORDS 11

7.0 EXHIBITS 11

8.0 APPENDICES 11

AMWTP MANAGEMENT PROCEDURE		
MP-RTQP-14.19, Rev. 9	Issued: 10/17/13	Effective: 10/18/13
Training Records Administration		

1.0 PURPOSE/SCOPE

This procedure describes the process to maintain training, qualification, and certification records for all personnel at the Advanced Mixed Waste Treatment Project (AMWTP). This procedure defines how AMWTP maintains *training records* (see def.) in an easily auditable format to meet the requirements in DOE O 426.2, Personnel Selection, Training, Qualification, and Certification Requirements for DOE Nuclear Facilities, the AMWTP HWMA/RCRA Permit, and the AMWTP HWMA/RCRA TSA IS Document.

Guidance in Nuclear Information and Records Management Association (NIRMA) TG-17, Guidelines for Management of Nuclear Related Training Records; TG-15, Management of Electronic Records; and TG-21, Electronic Records Protection and Restoration are used, as appropriate, to help standardize identification, handling, and storage of training records.

This procedure is used in conjunction with MP-DOCS-18.2, Records Management, which implements requirements of QAPP-01, AMWTP Quality Assurance Program Plan; DOE/CBFO-94-1012, Quality Assurance Program Document (QAPD); 10 CFR 830 Subpart A, Quality Assurance Requirements; and DOE Order 243.1, Records Management Program.

2.0 ROLES AND RESPONSIBILITIES

Performer	Responsibilities
Employee or Employee's Supervisor	• Forwards completed training documents to the training department for inclusion in the *employee's individual training file* (see def.) • Completes validation of records of employee's qualification and training in accordance with MP-DOCS-18.2.
Instructors	• Completes validation of course rosters and graded examination or answer sheets • Submits completed course rosters and graded examination/answer sheets to the *training coordinator* (TC; see def.).

Performer	Responsibilities
Training Coordinator	• Establishes and maintains course and qualification records to meet the requirements of this procedure • Maintains an index for satellite file location in WMF-1620 in accordance with MP-DOCS-18.2 • Establishes and maintains employees individual training file to meet the requirements of this procedure • Ensures data on employee completion of courses or qualification are properly entered into the *training database* (see def.).
Training Manager	• Controls access to training records in all formats • Ensures only authorized personnel enter or change entries in the training database.
Training Staff and/or Subject Matter Expert (SME)	• Forwards *instructional materials* (see def.) and course documents to the applicable training coordinator/training records administrator • Completes validation of new or revised instructional material in accordance with MP-DOCS-18.2.

3.0 PROCEDURE

3.1 Specific Requirements

3.1.1 TC: Maintain documentation of the training that personnel have completed in accordance with MP-TRUW-8.2, Quality Assurance Project Plan; MP-DOCS-18.2; MP-TRUW-8.1, Certification Plan for INL Transuranic Waste; LST-RTQP-01-IM, Training Requirements Matrix; and LST-RTQP-03-IM, WIPP Training Requirements Implementation Matrix.

3.1.2 Ensure that records generated during qualification, general indoctrination and training, or specific skill training activities are collected and maintained as *quality records* (see def.).

NOTE: *Although some legacy personally identifiable information (PII) may be found in protected historical records, current documentation that contains PII, such as Social Security Number, employment history, and medical information will be maintained in Human Resource and Environmental, Safety, and Health files, not by the Training Department.*

3.1.3 Maintain records of qualification and certification of personnel in each employee's individual training file including:

NOTE: *Records of oral examinations will include the list of questions asked and the examiner's overall evaluation of the responses.*

A. Latest completed qualification/certification packages and checklists, with supporting documents (such as, graded written examinations, walkthrough or operational evaluations, or oral board examinations) as needed

B. Records of qualification for-one-time only special tests or operations

C. Current approved requests for exceptions, exemptions, or extensions

D. Current approved forms for suspension of qualifications, disqualification, or reinstatement of qualifications

E. Copies of documentation for training provided by organizations external to the AMWTP.

3.1.4 TC: Establish and maintain temporary storage of completed examinations required for qualification/certification packages or checklists.

3.1.4.1 Attach the examinations to the employee's package or checklist when submitted.

3.1.5 Maintain a historical record of initial qualification or certification, subsequent requalification or certification, and all completed training in the training database for each active employee.

3.1.6 Establish and maintain training documents for current courses or qualification packages or checklists in accordance with MP-RTQP-14.9, Instructional Materials Development, Revision, and Control.

3.1.7 Establish and maintain course files of graded examinations or score sheets.

3.2 Training Records Management

3.2.1 Employee or Employee's Supervisor: Submit any of the following completed documents to the training department for inclusion in the employee's individual training file:

- Qualification/certification packages or checklists
- Approved exception, exemption, or extension
    - Form-1031, Training/Qualification Exception Form
    - Form-1032, Request for Re-Qualification/Re-Certification Extension Form
    - Form-1640, Request for An Exemption From Written Examination(s)
- Form-1902, Change in Qualification Status
- Copies of documentation for training provided by an organization external to AMWTP (correspondence, copies of certificates, cards, or rosters).

3.2.2 TC: Maintain required training records that are created by the various training activities.

3.2.3 Training Staff/SMEs/Instructors: Forward instructional materials (such as needs or job analyses, design plans, lesson plans, examination question banks and keys) per MP-RTQP-14.9 to the TC.

NOTE 1: *Rosters and completed examinations will be maintained in separate files.*

NOTE 2: *EPD and ITP are submitted electronically through the Training Records and Information Network (TRAIN) system and are stored and archived in an easily retrievable format in a folder on Enterprise.*

3.2.4 Instructors: Submit completed course rosters and examinations to the TC.

3.2.5 TC or Training Staff: Review training records on receipt for:

A. Person's name

B. Employee security number

C. Job/title position

D. Any associated training documentation

E. Legibility, accuracy, completeness and appropriateness to the work accomplished

F. Required signatures (such as instructor, line manager, and/or training manager)

G. Authorization by instructor of any corrections made on the record, ensuring appropriate signature and date requirements

H. Appropriate medium (black or blue ink) used that cannot be easily removed, washed away, or erased.

3.2.5.1 If medium is NOT black or blue ink, convert to permanent ink or other indelible agent.

3.2.6 Do not accept any incomplete document; return it to the originator for corrections.

3.2.7 If errors are found after a record has been accepted, either make corrections as directed by the training manager or return it to the originator for corrections.

3.2.7.1 Before returning any previously accepted records, scan or make a copy of the record.

3.2.7.2 Keep a log of the routing.

3.2.7.3 When the corrected record is returned, destroy the copy.

3.2.8 TC: Enter the following data from qualification/certification packages or checklists and admin forms into the Training database:

- Employee's security number
- Completion date and expiration date
- Comments (if needed).

3.2.8.1 Ensure the correct expiration date is assigned.

3.2.9 Enter the following data from rosters, exception, or exemption forms into the training database:

- Course or qualification title, identifier, or unique class ID
- Employee's security number
- Completion date
- Completion status.

3.2.10 If the record is an extension, qualification/certification suspension, reinstatement, or disqualification, revise the qualification dates.

3.2.10.1 Record the reasons in the comments section in the training database.

3.2.11 Enter the following data into the training database for new, revised, or discontinued courses or tailgate sessions:

- Course title, identifier, and description
- Revision number
- Effective or discontinue date
- Retrain period.

3.2.12 Enter the following data into the training database for new, revised, or discontinued qualification/certification packages, checklists, or admin forms:

- Qualification, certification, or admin form identifier
- Title and description
- Effective date and/or discontinue date
- Retrain period
- Revision number (as appropriate).

3.2.13 Verify data entry into the training database for qualification/certification packages, or that checklists have been properly completed.

3.2.14 Place records, as appropriate, into the employee's individual training files.

3.3 Storage and Maintenance of Training Records

3.3.1 Training Manager: Control access to training records in all formats in accordance with MP-DOCS-18.2.

3.3.1.1 Limit the number of persons able to enter or remove records from the hard copy or electronic employee's individual training file to those authorized by the training manager.

3.3.1.2 Limit the number of persons able to enter, change, or delete entries in the training database to those authorized by the training manager.

3.3.2 TC: Maintain storage of course records, instructional material records, and employee individual training records as directed in MP-DOCS-18.2.

NOTE: *Training records that are quality records are to be protected from loss or damage in accordance with MP-DOCS-18.2.*

3.3.3 If a training record is lost or damaged beyond recovery, ensure measures are taken to provide for replacement (i.e., use reproducible copies, restoration, or substitution of lost or damaged records).

(DOE/CBFO-94-1012)

3.3.4 Store *electronic training records* (see def.) so that those needed for legal purposes can be easily retrieved in a hard copy form.

3.3.4.1 Ensure that a backup copy is made and updated whenever revisions to the record are made and that a backup copy of the electronic training record is maintained and stored in a location separate from the working copy.

NOTE: *A differential back-up is performed nightly and a full back-up is performed weekly on Enterprise.*

3.3.4.2 Ensure electronic copies of instructional material are stored on Enterprise per MP-RTQP-14.9.

3.3.4.3 Maintain a scanned copy of all documents, excluding course rosters and associated test bubble sheets, in an employee's individual training file in the active employee folder on Enterprise for dual storage.

3.4 Records and Record Retention

3.4.1 TC: Discard *non-record* (see def.) material and duplicates as appropriate.

NOTE: *An informational copy of superseded documents for active employees may be retained on Enterprise.*

3.4.2 Transmit expired or superseded records for active employees to Records Management.

3.4.3 Send *inactive training records* (see def.) to Records Management per MP-DOCS-18.2.

3.4.4 Maintain records storage receipts for documentation of records sent to Records Management to facilitate retrieval of inactive records.

4.0 DEFINITIONS

Electronic training records. Training records created, stored, or transmitted using personal computers, word processors, and associated electronic office equipment.

Employee's individual training file. The folder where documentation of an individual's training and qualification records are compiled. The records may include completed written examinations, oral examinations, qualification or certification documents, documentation of non-company training, completed training exception records, completed requests for extension forms, records of qualification for one-time-only special tests or operational evaluations, and any other training documentation, whether microfilm, hard copy, or electronic database.

Inactive training records. Training materials that have been superseded by revision or discontinued, and individual training records of terminated personnel.

Instructional materials. Documents used in the delivery of training, including course lesson plans, trainee guides, exercise directions, handouts, instructional aids, qualification packages or checklists, tests and other such materials.

Non-record. Includes those classes of documentary material that may be disposed of without archival authority, such as copies of documentation of outside training, forms used only to provide information for the training database, informational checklists, and private or non-official papers.

Quality records. A completed document (or other medium) that furnishes evidence of the quality of items and/or activities affecting quality. In the training area, these are records providing evidence that an activity was performed in accordance with the applicable requirements of 10 CFR 830.120, Quality Assurance Requirements, Scope, DOE 414.1C, Quality Assurance, and ASME/NQA-1, Quality Assurance Requirements for Nuclear Facility Applications (i.e., files that provide documented proof of an individual's capability to perform assignments safely and proficiently). These records may include personal qualification records, completed qualification packages or checklists, and final examinations.

Training coordinator. Individual responsible for tasks such as tracking qualification status, interacting with the Training database, performing physical records management, scheduling training, and providing management status reports.

Training database. A computerized method of tracking and reporting training activities. The training database tracks course schedules and rosters, training activities, and employee completion of training records such as completion of training courses, qualifications, administration forms, required reading, and completion and expiration dates.

Training records. The validated paper and/or electronic data that comprise documentation of completed training. Formal training records are established and maintained for compliance with legislative, regulatory, corporate, company, or contract requirements. Informal training records are established and maintained in accordance with best business practices, such as documentation of completed personal development or computer training classes.

5.0 REFERENCES

(1) 10 CFR 830.120, Quality Assurance Requirements, Scope

(2) 10 CFR 830 Subpart A, Quality Assurance Requirements

(3) ASME/NQA-1, Quality Assurance Requirements for Nuclear Facility Applications

(4) AMWTP HWMA/RCRA Permit

(5) AMWTP HWMA/RCRA TSA IS Document

(6) DOE/CBFO-94-1012, Quality Assurance Program Document

(7) DOE O 243.1, Records Management Program

(8) DOE 414.1C, Quality Assurance

(9) DOE O 426.2, Personnel Selection, Training, Qualification, and Certification Requirements for DOE Nuclear Facilities

(10) Form-1031, Training/Qualification Exception Form

(11) Form-1032, Request for Re-Qualification/Re-Certification Extension Form

(12) Form-1640, Request for An Exemption From Written Examination(s)

(13) Form-1902, Change in Qualification Status

(14) Guidance in Nuclear Information and Records Management Association (NIRMA)

(15) LST-RTQP-01-IM, Training Requirements Matrix

(16) LST-RTQP-03-IM, WIPP Training Requirements Implementation Matrix

(17) MP-DOCS-18.2, Records Management

(18) MP-RTQP-14.9, Instructional Materials Development, Revision, and Control

(19) MP-TRUW-8.1, Certification Plan for INL Transuranic Waste

(20) MP-TRUW-8.2, Quality Assurance Project Plan

(21) QAPP-01, AMWTP Quality Assurance Program Plan

(22) TG-15, Management of Electronic Records

(23) TG-17, Guidelines for Management of Nuclear Related Training Records

(24) TG-21, Electronic Records Protection and Restoration

6.0 RECORDS

Records generated by this procedure are classified in accordance with the table below and dispositioned in accordance with MP-DOCS-18.2, Records Management.

Record Description	Classification
MP-RTQP-14.19, Case File	Nonpermanent WIPP/ENV1-J-1/Destroy 10 years after submittal
Individual training records as discussed in Section 3.1 and 3.2	Both FOR and NP WIPP/ENV2-a-1-a/Destroy 5 years after Life of Facility
For instructional material discussed in 3.2.3	Misc. Other Records A16-1.2 Submit to RMC when complete, superseded, or obsolete. Destroy 5 years after submittal

7.0 EXHIBITS

None

8.0 APPENDICES

None

Certification Plan for INL Transuranic Waste

Advanced Mixed Waste Treatment Project

Approval:

(*Signature on file. See DCR-12314.*) 06/05/13

Date

AMWTP MANAGEMENT PROCEDURE		
MP-TRUW-8.1, Rev. 24	Issued: 06/10/13	Effective: 06/11/13
CERTIFICATION PLAN FOR INL TRANSURANIC WASTE		

DOCUMENT APPROVAL SHEET

Document Type: Compliance Plan **Document Number:** MP-TRUW-8.1

Title: Certification Plan for INL Transuranic Waste

Author: Gina Tedford **Phone:** 208 557-6449

Document Owner: George Byram **Phone:** 208 557-6319

REVIEW CONCURRENCE AND APPROVAL SIGNATURES

Denote R for review concurrence, A for approval, as appropriate.

Type or print name Signature	R/A	Date	Organization Discipline	Mailing Address
Eric Schweinsberg *George Byram for E. Schweinsberg (Signature on File)*	R	6/4/13	Site Project Manager	850 Energy Drive, Idaho Falls, Idaho 83401-1502
Angie Morse *Signature on File*	R	06/04/13	Site QA Manager	850 Energy Drive, Idaho Falls, Idaho 83401-1502
Dennis Miehls *Signature on File*	A	6/4/13	DOE-CBFO Acting Director, Office of Quality Assurance	DOE-CBFO Carlsbad, NM 88221
J. R. Stroble *Signature on File*	A	6/5/13	DOE-CBFO Director, Office of the National TRU Program	DOE-CBFO Carlsbad, NM 88221

REVISION LOG

Revision Number	Date Approved	Pages Affected	Description of Revision
0	08/01/02	All	Initial issue. DCR-1230. Document issue date was 07/17/02. DOE/WIPP approval was received 07/30/02 thus the change in effective date to 08/01/02.
1	12/19/02	Various	DCR-1820. Correct procedure titles and numbers. Added verbiage to include manual data review. Added DOE-ID to the Document Approval Sheet in accordance with MP-DOCS-18.4. Document issue date was 12/19/02. DOE/WIPP approval was received 01/14/03 thus the change in effective date to 02/06/03.
2	06/11/03	Various	DCR-2117: Incorporate WIPP WAC Rev. 0.1 and QAPD Rev. 4 requirements. Correct procedure references in Section 4. Document issue date was 03/20/03. DOE/WIPP approval was received 04/03/03. The original signature page was lost and was resigned, thus the change in effective date is 06/11/03.
3	10/07/03	Various	DCR-2478. Updated to clarify QA Organization roles & responsibilities and to include reference to 40 CFR 194. These updates address EPA Finding discussed during CBFO Audit A 03-05.
4	03/04/04	Various	DCR-2633: Annual review and update and incorporate new headspace gas procedure references
5	08/18/04	Various	DCR-2825. Incorporate WIPP CH-WAC DOE/WIPP-02-3122 Revision 1 changes and incorporate facility procedures.

Revision Number	Date Approved	Pages Affected	Description of Revision
6	11/15/04	Various	DCR-3263. Incorporate the CH-WAC, DOE/WIPP 02-3122 Revision 2 changes and incorporate the draft Revision 3 changes addressing the proposed disposal acceptance criteria pertaining to ^{239}Pu FGE limits for machine compacted waste. (WIPP memorandum CBFO:NTP:RJM:VW:04-2024:UFC:5822) Revision 6 was rejected by CBFO. Revision 6 will not be issued.
7	12/02/04	16 of 74	See DCR-4026.
8	04/25/05	Various	DCR-4252 Incorporation of DOE/WIPP-02-3120, WIPP Waste Acceptance Criteria Revision 3 requirements. Incorporation of CBFO DRR comments.
9	06/09/05	34	DCR-4281. Incorporation of Class 1 Permit Modification Notification to Revise Language for Compacted 55-Gallon Drums With Rigid Liners, April 27, 2005 and WIPP Memorandum CBFO:OCT:KWW:VW:05-1164-UFC:5822. Incorporated the procedure to implement the UFGTP long-term objective.
10	01/03/06	All	DCR-4399. Implementation of Rev. 4 of CH-WAC.
11	06/30/06	All	DCR-5040. Various changes to reflect new contractor and laboratory titles, additional requirements from the WAC, OSM implementation, training program changes, and numerous editorial changes, corrections, and clarifications.
12	01/04/07	All	DCR-5542. Incorporate changes to the DOE/WIPP-02-03122, Transuranic Waste Acceptance Criteria (WAC) for WIPP, and DOE/CBFO-94-1012, Quality Assurance Program Plan (QAPD).
13	07/26/07	All	DCR-6071. Update the procedural reference titles for implementation of DOE/WIPP 02/3184 and DOE/WIPP 06-3345. CCP Analytical Laboratory Changes, delete MP-TRUW-8.16, WWIS Data Transfer from procedure.

Revision Number	Date Approved	Pages Affected	Description of Revision
14	12/21/07	All	DCR-6556. Incorporated requirements from DOE/WIPP-02-3122, WIPP WAC, Rev. 6.1. Periodic review.
15	3/28/08	All	DCR-6782. Incorporated CCP transportation and flammable gas changes for transition.
16	07/07/08	Appendix G	DCR-7194. Incorporated requirements from DOE/WIPP-02-3122, WIPP WAC, Rev. 6.2, and corrected revision log approval date for Rev. 15.
17	04/01/09	Various	DCR-8014. Incorporate requirements from DOE/WIPP-02-3122, WIPP WAC, Revision 6.3, add INST-OI-75 and INST-OI-81, and minor editorial corrections. Periodic review.
18	12/18/09	Various	DCR-8904. Incorporate DOE/WIPP-02-3122, Revision 6.4, The majority of the changes to this document are contained in Tables 3.3.2 and 3.3.4. These changes capture the FGE and PE-Ci requirements contained in the Waste Isolation Pilot Plant Documented Safety Analysis. Other changes include updates to the acronym list, an addition to the glossary, modification of the references, and minor editorial changes.
19	06/24/10	Various	DCR-9317. Incorporated the WIPP Hazardous Waste Permit modification of April 1, 2010; DOE/WIPP-03-3122, Revision 6.5; and DOE/CBFO-94-1012, Quality Assurance Program Plan, Revision 11. Sections 3.4.1, 4.4.1, and Appendix G were revised to clarify language regarding liquid prohibition and visual examination. The term “residual liquid” was replaced with “observable liquid.” Deleted the CNS designation for the 10-160B cask, revised references in Chapter 6.0, deleted a reference in Appendix E, and updated the glossary.

Revision Number	Date Approved	Pages Affected	Description of Revision
20	12/16/10	Various	DCR-9709. Incorporate the WIPP Waste Acceptance Criteria, Rev. 7.0. Revision 7.0 incorporates extensive editorial changes and includes renumbering of the pages, renumbering of the references to correspond with the order of their appearance in the document, alignment of the cited sections of the WIPP Hazardous Waste Permit Renewal, renumbering of the tables, reformatting the table addressing ^{239}Pu FGE limits for payload containers to minimize the use of footnotes, numerous punctuation and grammatical changes, addition/deletion of acronyms, updates to Internet links, and minor text changes for the purposes of clarification, including the incorporation of a statement in Section 3.1.4.1 that Appendices F and G specify the methodologies used to quantify the waste component limits of interest to EPA. Also added a statement in Sections 3.1 and 4.1 that the WIPP Waste Information System (WWIS) database is a subsystem of the Waste Data System (WDS).

Revision Number	Date Approved	Pages Affected	Description of Revision
21	07/27/11	4, 7, 15, 26, 59, A6, A9, A11, A12, A14, B2, and E1.	DCR-10200. Incorporated the WIPP Waste Acceptance Criteria, Revision 7.1 and 7.2. Revision 7.1 incorporates editorial changes. These changes include changes in terminology to mirror the WCPIP, the incorporation of clarification text in Sections 3.0 and A.6.1 as recommended by the U.S. Environmental Protection Agency, the reformatting of bullet lists and table footnote fonts to improve readability, and the correction of typographical errors. This document does not address the editorial changes that align Section 4.2.5 with the radiation dose equivalent dose rate requirements from the Remote-Handled (RH) TRU Waste Characterization Program Implementation Plan (WCPIP) or the clarifications addressed in Section 4.0, as the AMWTP does not ship RH waste. Revision 7.2 incorporates the requirements for the TRUPACT-III and SLB2. References have been updated to include the Certificate of Compliance and the Transuranic Waste Authorized Methods for Payload Control for the TRUPACT-III. Other changes include updates to the list of acronyms, glossary, and Table A-1.
22	09/12/12	Various	DCR-11153. Annual Review. Changed document owner and Site QA Manager on the Document Approval Page, updated Section 5.4.1 and Figure 5.1 to reflect ITG organizational changes, and made small editorial changes. Updated to ITG-BLUESHEET-073.

Revision Number	Date Approved	Pages Affected	Description of Revision
23	03/18/13	Various	DCR-12146. Incorporated Revision 7.3 of the WIPP Waste Acceptance Criteria. Changes include the addition of three new approved payload containers, including the shielded container, the NS15 neutron shielded canister, and the NS30 neutron shielded canister. The associated changes are in Sections 3.2.1, 3.2.5, 3.2.7, 3.3.2 (Table 1), 3.3.4 (Table 2), 3.3.5, 3.4.2, and Appendix C (Glossary). Added DOE/WIPP-11-3384 to the reference list. Other changes include updates to Internet links, editorial changes, and typographical corrections. Deleted all references to INST-OI-81 per DOCS-BLUESHEET-10.
24	06/05/13	Various	DCR-12314. Incorporated the information from the WIPP WAC, Rev 7.4, changes resulting from the Class 2 Permit Modification entitled, "Revise Waste Analysis Plan Waste Characterization Methods," which was approved by NMED on March 13. 2013.

CONTENTS

1.0 INTRODUCTION 1

2.0 RESPONSIBILITIES 4

2.1 DOE Headquarters 4

2.2 DOE Carlsbad Field Office 4

2.3 DOE Field Elements 5

2.4 TRU Waste Sites 5

3.0 WIPP WASTE ACCEPTANCE REQUIREMENTS AND CRITERIA 6

3.1 Summary of WIPP Authorization Basis 6

3.2 Container Properties 10

3.3 Radiological Properties 16

3.4 Physical Properties 26

3.5 Chemical Properties 27

3.6 Data Package Contents 30

4.0 WASTE ACCEPTANCE REQUIREMENTS AND CRITERIA FOR RH WASTE 31

5.0 QUALITY ASSURANCE REQUIREMENTS 31

5.1 Waste Characterization QA Requirements 32

5.2 Waste Certification QA Requirements 32

5.3 Waste Transportation QA Requirements 32

5.4 Quality Assurance Program 33

5.5 Personnel Qualification and Training 40

5.6 Quality Improvement 41

5.7 Documents and Records 45

5.8 Performance Requirements 47

5.9 Design Control 48

5.10 Procurement 48

5.11 Inspection and Testing 49

5.12 Assessment Requirement 50

5.13 Scientific Investigation Requirements 53

5.14 Software Requirements 54

6.0 REFERENCES 55

Appendix A – Radioassay Requirements for Contact-Handled Transuranic Waste A1

Appendix B – ^{239}Pu Equivalent Activity B1

Appendix C – Glossary C1

Appendix D – Payload Container Integrity Checklist D1

Appendix E – Payload Management of TRU Alpha Activity Concentration E1

Appendix F – Radiography Requirements for Contact-Handled Transuranic Waste for EPA Compliance F1

Appendix G – Visual Examination Requirements for Contact-Handled Transuranic Waste for EPA Compliance G1

ACRONYMS AND ABBREVIATIONS

AIM	Association for Automatic Identification and Mobility
AK	acceptable knowledge
ALARA	as low as reasonably achievable
AMAD	activity mean aerodynamic diameter
AMWTP	Advanced Mixed Waste Treatment Project
ANS	American Nuclear Society
ANSI	American National Standards Institute
ASNT	American Society of Nondestructive Testing
ASTM	American Society for Testing and Materials
CAR	Corrective Action Report
CBFO	Carlsbad Field Office
CCP	Central Characterization Project
CFR	Code of Federal Regulations
CH	contact handled
CH-TRAMPAC	Contact-Handled Transuranic Waste Authorized Methods for Payload Control
CH-TRU	contact-handled transuranic
Ci	curie
CIS	Characterization Information Summary
CPR	cellulose, plastic, and rubber
DAS	drum assay system
DDA	differential die-away
DOE	U.S. Department of Energy
DOE-ID	Department of Energy Idaho Operations Office
DOT	U.S. Department of Transportation
dpm	disintegrations per minute
DQO	data quality objective
DSA	Documented Safety Analysis
EPA	U.S. Environmental Protection Agency
FEIS	Final Environmental Impact Statement
FGE	fissile gram equivalent

HGS	headspace gas sampling
HWFP	Hazardous Waste Facility Permit
ICP	Idaho Cleanup Project
ICV	inner container vessel
ID	Idaho
INL	Idaho National Laboratory
IWAS	Integrated Waste Assay System
keV	kiloelectron volt
LLD	lower limit of detection
LWA	Land Withdrawal Act
mrem	milliroentgen equivalent man
nCi/g	nanocuries per gram
NCR	nonconformance report
NDA	nondestructive assay
NDE	nondestructive examination
NEPA	National Environmental Policy Act
NMAC	New Mexico Administrative Code
NMED	New Mexico Environment Department
NRC	U.S. Nuclear Regulatory Commission
OJT	on-the-job training
PCB	polychlorinated biphenyl
PCTCD	payload container transportation certification document
PDP	Performance Demonstration Program
PE-Ci	^{239}Pu equivalent curie
POC	pipe overpack container
QA	quality assurance
QAO	Quality Assurance Objective
QAP	Quality Assurance Plan
QAPD	Quality Assurance Program Document
QAPjP	Quality Assurance Project Plan
QC	quality control
%R	percent recovery
RC	radiochemistry
RCRA	Resource Conservation and Recovery Act
RE	retrieval enclosure
rem	roentgen equivalent man

RH	remote handled
RH-TRAMPAC	Remote-Handled Transuranic Waste Authorized Methods for Payload Control
RSD	relative standard deviation
RTR	real-time radiography
SATR	Site Acceptance Test Reports
SAR	Safety Analysis Report
SEIS	Supplemental Environmental Impact Statement
SLB2	standard large box 2
SME	subject matter expert
SNM	special nuclear material
SOW	Statement of Work
SPM	Site Project Manager
SPO	Site Project Office
SWB	standard waste box
TCO	Transportation Certification Official
TDOP	ten-drum overpack
TMU	total measurement uncertainty
TRAMPAC	Transuranic Waste Authorized Methods for Payload Control
TRU	transuranic
TRUPACT-II	Transuranic Package Transporter II
TRUPACT-III	Transuranic Package Transporter III
TSDF	Treatment, Storage, and Disposal Facility
VE	visual examination
VOC	volatile organic compound
WAC	Waste Acceptance Criteria
WAP	Waste Analysis Plan
WCO	Waste Certification Official
WCPIP	Waste Characterization Program Implementation Plan
WDS	Waste Data System
WIPP	Waste Isolation Pilot Plant
WSPF	Waste Stream Profile Form
WTES	WIPP TRAMPAC Evaluation Software
WTS	Waste Tracking System
WWIS	WIPP Waste Information System

1.0 INTRODUCTION

The purpose of this document is to summarize the methods and procedures used by the Idaho National Laboratory (INL) Advanced Mixed Waste Treatment Project (AMWTP) to certify waste as compliant to the waste acceptance criteria (WAC) applicable to the transportation, storage, and disposal of contact-handled (CH) and remote-handled (RH) transuranic (TRU) waste at the Waste Isolation Pilot Plant (WIPP). The Central Characterization Project (CCP) provides transportation services through the CCP Certified Program as specified in the AMWTP Statement of Work (SOW). These criteria serve as the U.S. Department of Energy's (DOE's) primary directive for ensuring that CH- and RH-TRU waste is managed and disposed of in a manner that protects human health and safety and the environment.

The WIPP authorization basis for the disposal of CH- and RH-TRU waste includes the Department of Energy (DOE) National Security and Military Applications of Nuclear Energy Authorization Act of 1980 (Reference 24) and the WIPP Land Withdrawal Act (LWA; Reference 25). Included in this document are the requirements and associated criteria imposed by these acts and the Resource Conservation and Recovery Act (RCRA, Reference 26), as amended, on the TRU waste destined for disposal at WIPP.

The AMWTP certifies CH-TRU waste payload containers to the waste acceptance criteria identified in this document. As shown in Figure 1.0, the Regulatory Basis of TRU Waste Acceptance Criteria, the flow-down of applicable requirements to the WAC is traceable to several higher-tier documents, including the WIPP safety requirements taken from the WIPP Documented Safety Analysis (DSA; Reference 21), the transportation requirements for CH wastes derived from the Transuranic Package Transporter II (TRUPACT-II), Transuranic Package Transporter III (TRUPACT-III), and HalfPACT Certificate of Compliance (References 46, 47, and 48), the transportation requirements for RH wastes derived from the 10-160B and RH-TRU 72-B Packaging Certificates of Compliance (References 52 and 53), the WIPP LWA (Reference 25), the WIPP Hazardous Waste Facility Permit (HWFP) (Reference 44), and the U.S. Environmental Protection Agency (EPA) Compliance Recertification Decision and approval for polychlorinated biphenyls (PCBs) disposal (References 16, 18, 30, 32, 33, and 43) and the EPA's letter of approval of DOE's RH-TRU Waste Characterization Program (Reference 31). The solid arrows shown in Figure 1.0 represent the flow-down of all applicable payload container-based requirements. The dotted arrows shown in Figure 1.0 represent the flow down of summary level requirements only; i.e., sites must reference the regulatory source documents from the U.S. Nuclear Regulatory Commission (NRC) and the New Mexico Environment Department (NMED) for a complete listing of the requirements.

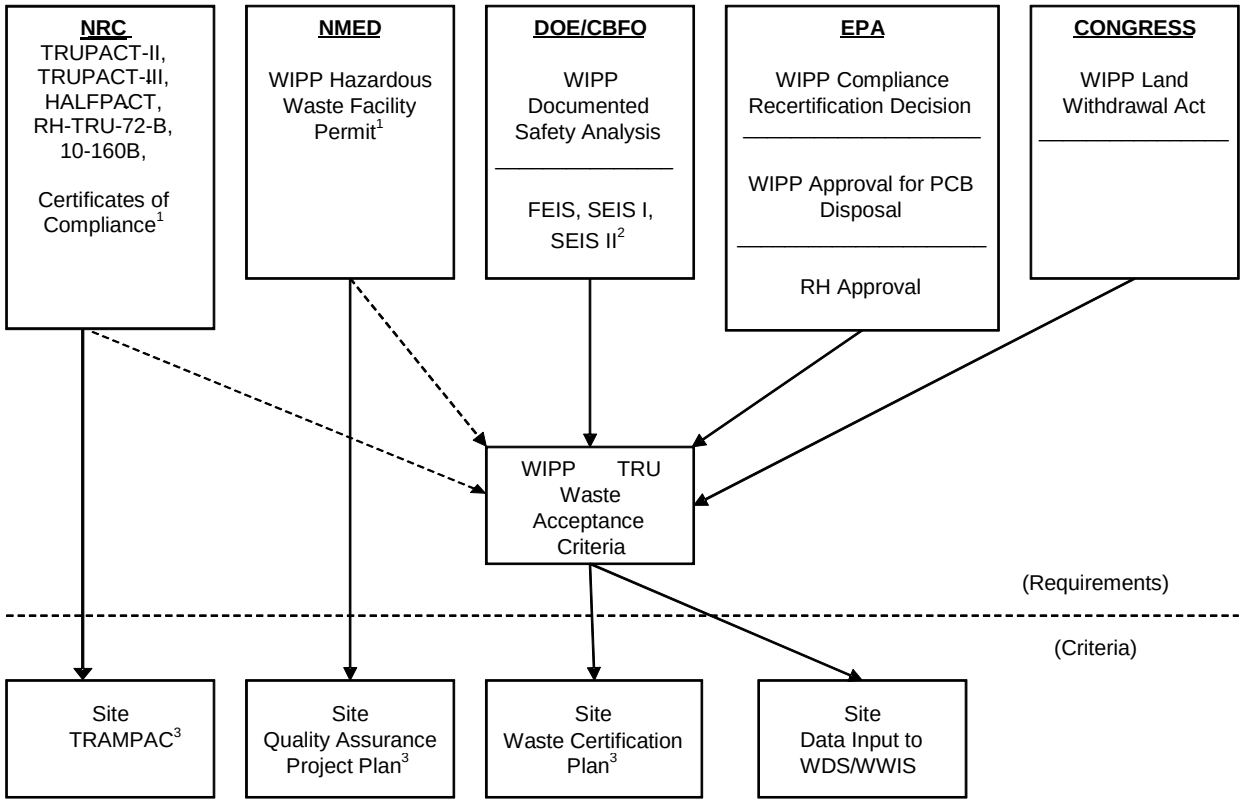

1. The Transuranic Waste Authorized Methods for Payload Control (TRAMPACs) as referenced by the TRUPACT-II, TRUPACT-III, HalfPACT, and RH-TRU-72-B Certificates of Compliance, Safety Analysis Report as referenced in the 10-160B Certificate of Compliance and the WIPP HWFP provide detailed requirements. This WAC provides only and overview of these requirements.
2. Final Environmental Impact Statement (FEIS), Supplemental Environmental Impact Statement (SEIS).
3. All work performed by the site for the Carlsbad Field Office (CBFO) must be performed under an approved quality assurance (QA) program. The site-specific Transuranic Waste Authorized Methods for Payload Control (TRAMPAC) can be a separate document or can be embodied in the site waste certification plan. The 10-160B Safety Analysis Report (SAR) does not require the preparation of a site-specific TRAMPAC. Instead, acceptable methods for payload compliance for the 10-160B package are

Figure 1.0 Regulatory Basis of TRU Waste Acceptance Criteria.

This Certification Plan for INL Transuranic Waste, also referred to as the Certification Plan, does not address the subject of waste characterization relating to a determination of whether the waste is hazardous; rather, the AMWTP refers to the MP-TRUW-8.2, Quality Assurance Project Plan, for details of the protocols to be used in determining compliance with the required physical and chemical properties of the waste. Requirements and associated criteria pertaining to a determination of the radiological properties of the waste, however, are addressed in Appendix A.

The requirements and associated criteria pertaining to a determination of the radiological properties of RH waste are addressed in the Remote-Handled TRU Waste Characterization Program Implementation Plan (WCPIP, Reference 19). The collective information obtained from waste characterization records and acceptable knowledge (AK) serves as the basis for AMWTP to certify that its TRU waste satisfies the WIPP waste acceptance criteria.

Section 2.0 of this document identifies the responsible organizations and associated activities for ensuring that the TRU waste is managed in a manner that protects human health and safety and the environment.

Section 3.0 identifies the authorization basis of the CH requirements and lists the associated waste acceptance criteria relating to the physical, chemical, and radiological attributes of the waste as well as the properties of the applicable payload containers and packages.

Section 4.0 identifies the authorization basis of the RH requirements and lists the associate waste acceptance criteria relating to the physical, chemical, and radiological attributes of the waste as well as the properties of the applicable payload containers and packaging. Containers suspected to be RH-TRU waste will undergo preliminary characterization to ensure that the waste is candidate RH-TRU waste. RH-TRU waste will be transferred to the Idaho Cleanup Project (ICP) contractor for subsequent characterization, certification, and shipment to WIPP.

Section 5.0 summarizes the AMWTP Quality Assurance (QA) requirements relating to waste characterization, and certification. The AMWTP has developed and implemented a QA program that meets all applicable requirements of the Carlsbad Field Office (CBFO) Quality Assurance Program Document (QAPD; Reference 6). Characterization of TRU waste must be in accordance with the WIPP Waste Analysis Plan (WAP) (Reference 44), the WCPIP (Reference 19), and the WAC (Reference 14), and implemented in accordance with MP-TRUW-8.2 and this document. Certification of payload containers for shipment in the TRUPACT-II, TRUPACT-III, HalfPACT, RH-TRU 72-B, or 10-160B is performed under the CCP QA program, which provides confidence for both the shipper and the receiver that the requirements for the transportation system have been met.

The appendices provide supplemental information relating to radioassay (Appendix A, Radioassay Requirements for Contact-Handled Transuranic Waste) and radiotoxic inhalation hazard analyses (Appendix B, ^{239}Pu Equivalent Activity). Appendix C, Glossary, provides definitions for terms used in this document. Appendix D, Payload Container Integrity Checklist, addresses the visual examination requirements and compliance criteria for determining if CH and some RH payload containers meet the criteria of Section 3.2.1 and Section 4.2.1, respectively. Appendix E, Payload Management of TRU Alpha Activity Concentration, describes the policy and implementation methods for the payload management of TRU alpha activity concentration when overpacking waste containers. Appendices F, Radiography Requirements for Contact-Handled Transuranic Waste, and G, Visual Examination Requirements for

Contact-Handled Transuranic Waste for EPA Compliance, provide the radiography and visual examination (VE) requirements relating to EPA's physical characterization requirements for CH waste.

The WAC is a controlled document. The current version of the WAC may be downloaded from the CBFO web page at http://www.wipp.energy.gov/library/wac/WAC.pdf. This Internet link is provided for informational purposes only and may change without prior public notification.

2.0 RESPONSIBILITIES

This section identifies the responsibilities of organizations that develop and approve the WIPP WAC and of those that oversee the implementation of the requirements defined herein. The responsibilities of the AMWTP to which these requirements apply are also identified in this section.

2.1 DOE Headquarters

The Assistant Secretary for Environmental Management (EM-1) provides policy and guidance for DOE environmental management sites, facilities, and operations.

2.2 DOE Carlsbad Field Office

The CBFO is responsible for the day-to-day management and direction of strategic planning and related activities associated with the characterization, certification, transportation, and disposal of defense TRU waste. The CBFO holds the applicable permits, certifications, and records of decision necessary for the operation and closure of the WIPP facility.

The CBFO assists the sites in resolving issues about the management of TRU waste as requested. The CBFO provides policy and oversight direction for TRU waste program activities related to site certification of waste for disposal at WIPP. The CBFO is also responsible for the following:

- Ensuring that the sites prepare implementation documentation and programs to meet the requirements and criteria in the WAC
- Overseeing activities associated with the:
  - Characterization and certification of TRU waste
  - Proper use of approved transportation packaging
  - Receipt, management, and disposal of TRU waste at WIPP.
- Providing a fleet of NRC-approved Type B transportation packaging for shipment of TRU waste from the sites to WIPP

- Ensuring that TRU waste accepted for management and disposal at WIPP complies with the WIPP HWFP, applicable laws, and regulations as described in the WAC
- Reviewing and approving proposed revisions to the WAC to ensure that environmental impacts associated with any revision are bounded by existing WIPP National Environmental Policy Act (NEPA) documentation including the Final Environmental Impact Statement (Reference 11), and related Supplements I (Reference 12) and II (Reference 13)
- Reviewing and approving the site's waste certification plan, site-specific Transuranic Waste Authorized Methods for Payload Control (TRAMPACs), QA plans, and Quality Assurance Project Plans (QAPjPs)
- Performing site certification audits and surveillances
- Granting transportation and waste certification authority to sites.

2.3 DOE Field Elements

Each DOE Field Element is responsible for overseeing the management of the site TRU waste program in compliance with established CBFO requirements, policies, and guidelines; and providing liaison between the CBFO and the management and operating contractors.

2.4 TRU Waste Sites

The AMWTP is responsible for developing and implementing site-specific TRU waste program documents (plans) that address applicable requirements and criteria pertaining to packaging, characterization, certification, and shipping of defense TRU waste to WIPP for disposal. The AMWTP has prepared this Waste Certification Plan and associated QA Plan, and a QAPjP. The CCP TRAMPAC (Reference 58) fulfills the NRC approved CH-TRAMPAC requirements for payload compliance. Methods of compliance with each requirement and associated criterion to be implemented are described or specifically referenced and include procedural and administrative controls consistent with the CBFO QAPD (Reference 6). The AMWTP and CCP submit these program documents to the CBFO for review and approval prior to implementation. The AMWTP certifies that each TRU waste payload container meets the waste acceptance criteria contained in this document. The AMWTP QA requirements relating to waste characterization, certification, and transportation are contained in Section 5.0. The following AMWTP and CCP site-specific TRU waste program documents are submitted to CBFO for review and approval prior to implementation:

- MP-TRUW-8.1, Certification Plan for INL Transuranic Waste

- MP-TRUW-8.2, Quality Assurance Project Plan
- CCP-PO-003, CCP Transuranic Authorized Methods for Payload Control (CCP CH-TRAMPAC; Reference 58).

Additional implementing procedures not listed above also require CBFO approval prior to implementation. The AMWTP Site Project Office, project level positions, and primary responsibilities are described in Section 5.4.1 of this document.

3.0 WIPP WASTE ACCEPTANCE REQUIREMENTS AND CRITERIA

The requirements and associated criteria for acceptance of defense TRU waste at WIPP for disposal are identified in the WAC. The acceptance criteria of the WAC describe the controlling (i.e., the most restrictive) requirements to be used by the AMWTP in preparing their waste for transportation to and disposal at the WIPP. In some instances, the acceptance criteria and regulatory requirements are synonymous. Waste Acceptance Criteria requirements are taken from several source documents, including, but not limited to, the following: the WIPP DSA (Reference 21), the TRUPACT-II, TRUPACT-III, and HalfPACT Certificates of Compliance (References 46, 47, and 48), the WIPP LWA (Reference 25), the WIPP HWFP (Reference 44), Compliance Recertification Decision (Reference 33), the Initial Report for PCB Disposal Authorization (Reference 18), the EPA letter of approval to land dispose non-liquid PCBs at WIPP (References 30 and 43) and the Revision to the Record of Decision for the DOE's WIPP Disposal Phase and associated WIPP NEPA database (References 32 and 16). Terms used in this Certification Plan are defined in Appendix C.

When implementing the WAC, TRU waste characterization programs should refer to these source documents, 40 Code of Federal Regulations (CFR) § 194.8 and 194.24, and other WIPP program documents including Performance Demonstration Program Plans and the Quality Assurance Program Document, as applicable, for information pertinent to the DOE system of controls, including compilation of AK.

3.1 Summary of WIPP Authorization Basis

The purpose of Section 3.0 and related appendices is to present the requirements and associated criteria that must be met for CH-TRU waste to be transported to, managed at, and disposed of at the WIPP. The requirements and associated criteria are organized under five major headings: Container Properties, Radiological Properties, Physical Properties, Chemical Properties, and Data Package Contents. Only TRU waste from a properly characterized and approved waste stream may be certified as meeting the requirements and associated criteria contained in this Certification Plan. Any waste container from a waste stream that has not been preceded by a permittee approved Waste Stream Profile Form (WSPF) is not acceptable at WIPP (Reference 44, Part 2, Section 2.3.3.10).

Site-specific plans and procedures shall contain details of the processes, controls, techniques, tests, and other actions to be applied to each TRU payload container, waste stream, and shipment. Methods of compliance with each requirement shall be described and the specific procedure cited. These methods of compliance shall include procedural controls, administrative controls, and waste generation process controls. The QA requirements applicable to waste characterization, certification, and transportation are addressed in various sections of this Certification Plan and are briefly summarized in Section 5.0. The data resulting from the implementation of the plans and procedures will form the basis for verifying that TRU waste to be sent to WIPP is certified to meet the WAC by the responsible site certifying official(s).

Sites shall transmit required characterization, certification, and shipping data to the WIPP Waste Information System (WWIS) using the Waste Data System (WDS). The WWIS is an electronic database and is a subset of the WDS. The WDS is equipped with edit/limit checks to ensure that the data representing the waste payload containers are in compliance with the WAC. Before shipping TRU waste payload containers from a WIPP-accepted waste stream, the site shall transmit the required waste characterization, certification, and shipping data via WDS to the WWIS database. Sites may be periodically requested to transmit payload container radiography reports or other data to the WWIS using the WDS. The WIPP will not accept any waste shipments for disposal if the waste payload container information has not been correctly submitted and approved for shipment by the WDS/WWIS Data Administrator. The Waste Data System User's Manual (Reference 9) provides the information needed to perform tasks associated with transmittal of the payload container's characterization, certification, and shipment information to WIPP.

Sites will be notified of revisions to external regulatory requirements by CBFO. Revisions of requirements in referenced documents not controlled by the DOE (but by, for example, the EPA, NRC, or NMED) shall have precedence over the values specified here if they are more restrictive. These changes will be incorporated in future revisions of the WAC.

3.1.1 DOE Operations and Safety Requirements for WIPP

The WIPP DSA (Reference 21) addresses TRU waste handling and emplacement operations. The waste accepted for emplacement in the WIPP must conform to the WAC to meet the DSA. The DSA documents, the safety analyses that develop and evaluate the adequacy of the WIPP safety bases necessary to ensure the safety of workers, the public, and the environment from the hazards posed by WIPP waste receiving, handling, and emplacement operations. The DSA establishes and evaluates the adequacy of the safety bases in response to plant normal and abnormal operations and postulated accident conditions.

3.1.2 NRC Transportation Safety Requirements

Acceptable methods for payload compliance are defined in the TRUPACT-II, TRUPACT-III, and HalfPACT Certificates of Compliance and implemented by the CH-TRAMPAC and TRUPACT-III TRAMPAC (Reference 49 and 50). For shipments to WIPP, each site must prepare a site-specific TRAMPAC describing how it will ensure compliance with each payload parameter. The site specific TRAMPAC shall contain sufficient detail to allow reviewers to adequately understand and evaluate the compliance methodology for each payload parameter.

Sites shall have a packaging QA program that defines the QA activities that apply to the use of NRC-approved transportation packaging equivalent to Title 10 of the Code of Federal Regulations (10 CFR) Part 71, Subpart H, (Reference 35).

3.1.3 NMED Hazardous Waste Facility Permit Requirements

TRU waste is classified as TRU-mixed waste if it contains hazardous constituents regulated under the New Mexico Hazardous Waste Act (Reference 45). Only TRU-mixed waste and TRU waste that have been characterized in accordance with the WIPP WAP and that meet the Treatment, Storage, and Disposal Facility (TSDF) waste acceptance criteria as presented in the HWFP Sections 2.3.3.1 through 2.3.3.10 will be accepted at the WIPP facility for disposal in the permitted underground hazardous waste disposal unit.

The AMWTP has developed and implemented a QAPjP that addresses all the applicable requirements specified in the WIPP WAP. In accordance with Attachment C5 of the WIPP WAP, the QAPjP includes the qualitative and/or quantitative criteria for determining whether the waste characterization program is being satisfactorily performed. All QAPjPs are reviewed and approved by the CBFO.

3.1.4 EPA Requirements

3.1.4.1 EPA Compliance Recertification Decision

Title 40 CFR 194.24(c) states that the DOE shall specify the limiting values for waste components to be emplaced in the repository (Reference 39). The EPA's Compliance Recertification Decision (Reference 33) identifies the repository limits for several waste components including free water, metals, and cellulose, plastic, and rubber (CPR). Although the recertification does not specify limiting values for the activities and masses of specific radionuclides, it identifies the listed values for a number of radionuclides that are considered in the Performance Assessment. To demonstrate that the cumulative total activities of the specified radionuclides (^{241}Am, ^{238}Pu, ^{239}Pu, ^{240}Pu, ^{242}Pu, ^{233}U, ^{234}U, ^{238}U, ^{90}Sr, and ^{137}Cs) are consistent with the levels used for the Performance Assessment and the Recertification, and reporting, tracking of the specified radionuclides is necessary (see Appendix A). TRU waste payload

containers shall contain more than 100 nanocuries per gram of waste (nCi/g) of alpha-emitting TRU isotopes with half-lives greater than 20 years, as specified in Section 3.3.3.

The repository limit for free water is a maximum of 1,684 cubic meters (m^3) and is met by the observable liquid criterion specified in Section 3.4.1.

The limits for metals are a minimum of 2×10^7 kilograms (kg) for ferrous metals and 2×10^3 kg for nonferrous metals. These limits will be met in the total repository inventory by the metals that constitute the payload containers alone; thus, WIPP tracks the number and type of payload containers emplaced in the repository as reported in the WDS/WWIS by the sites (see Section 3.2.1).

The repository limit for CPR is a maximum of 2.2×10^7 kg. Sites are required to estimate the CPR weights and report these estimates in the WDS/WWIS on a payload container basis as required by Section 3.6.1.

Sites must quantify and report the activities and masses of specific radionuclides for the purpose of tracking the total radionuclide inventory of the repository as specified in Section 3.3.1. The presence or absence of these specific radionuclides is determined from AK, radioassay, or both in accordance with Appendix A. The results of this determination are reported in the WDS/WWIS on a payload container basis.

The methods used to quantify the above waste components for purposes of EPA compliance are discussed in Appendices A, F, and G.

3.1.4.2 EPA Approval for PCB Disposal

PCB-contaminated TRU and PCB-contaminated TRU waste mixed with a hazardous waste including PCB remediation waste, PCB articles, and PCB bulk product waste may be stored and disposed at the WIPP (References 16, 18, 30, 32, and 43).

Waste streams identified as containing PCBs shall be brought to the attention of the CBFO in order that a determination can be made regarding their acceptability at WIPP.

3.1.5 Land Withdrawal Act Requirements

The term “WIPP” means the Waste Isolation Pilot Plant project authorized under Section 213 of the Department of Energy National Security and Military Applications of Nuclear Energy Authorization Act of 1980 (Pub. L. 96-164; 93 Stat. 1259-1265), to demonstrate the safe disposal of radioactive waste materials generated by atomic energy defense activities (Reference 24). Hence, by law, WIPP can accept only radioactive waste generated by atomic energy defense activities of the United States (Reference 25, Section 2[19]).

The DOE and its predecessor agencies were engaged in a broad range of activities that fall under the heading of atomic energy defense activities. A TRU waste is eligible for disposal at WIPP if it has been generated in whole or in part by one or more of the following functions (References 27 and 28):

- Naval reactors development
- Weapons activities, including defense inertial confinement fusion
- Verification and control technology
- Defense nuclear materials production
- Defense nuclear waste and materials byproducts management
- Defense nuclear materials security and safeguards and security investigations
- Defense research and development.

Using AK, DOE sites must determine that each waste stream to be disposed of at WIPP is "defense" TRU waste.

High-level radioactive waste or spent nuclear fuel shall not be transported, emplaced, nor disposed of at WIPP (Reference 25, Section 12). Also, no TRU waste may be transported by or for the DOE to or from WIPP, except in packages (1) the design of which has been certified by the NRC, and (2) that have been determined by the NRC to satisfy its quality assurance requirements (Reference 25, Section 16[a]).

3.2 Container Properties

3.2.1 Description

Acceptance Criterion. Each payload container shall be assigned to a payload shipping category (Reference 49 and 50, Section 5.1.1). Authorized payload containers types include the:

- 55-gallon drum
- 55-gallon drum containing a pipe component (commonly referred to as a pipe overpack container [POC])
- 85-gallon drum[1] either direct loaded or containing one 55-gallon drum

1. The term "85-gallon drum" includes 75- to 88-gallon drums.

- 100-gallon drums
- Shielded container containing a 30-gallon steel drum
- Standard large box 2 (SLB2), either direct loaded or containing various individual containers (4 × 4 × 7-ft and 5 × 5 × 8-ft boxes as well as other containers of smaller size)
- Standard waste box (SWB, either direct loaded, containing up to four 55-gallon drums, three 83-gallon drums, two 100-gallon drums, or containing one bin)
- Ten-drum overpack (TDOP, either direct loaded, containing up to ten 55-gallon drums, up to six 85-gallon drums, or one SWB).

Payload containers shall meet U.S. Department of Transportation (DOT) Specification 7A; Type A, packaging requirements delineated in 49 CFR 173.465 (Reference 21, Section 2.6.2; Reference 44, Attachment A1, Section A1-1b; Reference 30, Section VI.F). Payload containers must be made of steel and be in good and unimpaired condition prior to shipment from the sites. To demonstrate compliance with the requirement that payload containers be in good and unimpaired condition, the exterior of all payload containers shall undergo 100% visual inspection prior to loading into an authorized package. The results of this visual inspection shall be documented using the Payload Container Integrity Checklist contained in Appendix D. A payload container in good and unimpaired condition (1) does not have significant rusting, (2) is of sound structural integrity, and (3) does not show signs of leakage. Significant rusting is a readily observable loss of metal due to oxidation (e.g., flaking, bubbling, or pitting) that causes degradation of the payload container's structural integrity. Rusting that causes discoloration of the payload container surface or consists of minor flaking is not considered significant. A payload container is not of sound structural integrity if it has breaches or significant denting or deformation. Breaching is defined as a penetration in the payload container that exposes the internals of the container. Significant denting or deformation is defined as damage to the payload container that results in creasing, cracking, or gouging of the metal, or damage that affects payload container closure. Dents or deformations that do not result in creasing, cracking, or gouging or affect payload container closure are not considered significant. Sites will report to the WDS/WWIS the number and types of payload containers planned for shipment to the WIPP (Reference 33).

Compliance. Authorized payload containers are controlled and verified in accordance with CCP-TP-033, CCP Shipping of CH TRU Waste (Reference 60).

MP-PCMT-15.1, Acquisition of Material and Services, and MP-PCMT-15.21, Material Management, provide the protocol for procuring and inspecting payload containers (e.g., drums, standard waste boxes [SWBs], and ten-drum overpacks [TDOPs]) to ensure compliance with DOT Specification 7A, Type A, packaging requirements

Operators visually inspect 100% of the payload containers to determine if the payload container meets the criteria detailed in Appendix D in accordance with CCP-TP-033. Payload containers that do not meet the container integrity visual inspection are overpacked prior to shipment. The numbers and types of payload containers planned for shipment to WIPP are reported to the WDS/WWIS in accordance with MP-TRUW-8.5, TRU Waste Certification.

3.2.2 Weight Limits and Center of Gravity

Acceptance Criterion. See the CH-TRAMPAC for weight limits and center of gravity requirements (Reference 49). See the TRUPACT-III TRAMPAC for applicable weight limits (Reference 50).

Compliance. Containers are weighed on calibrated scales in accordance with INST-OI-14, Drum Assay Operations; or INST-FOI-01, In-Plant Drum Assay Operations, as applicable. Calibrations of the scales are performed in accordance with the NIST Handbook 44, Specifications, Tolerances, and Other Technical Requirements for Weighing and Measuring Devices (Reference 56), or an equivalent standard and INST-CMNT-10.5.1, Calibration and Control of Measuring and Test Equipment. The CCP Transportation Certification Official (TCO) confirms the individual payload container weights using the WDS/WWIS Payload Container Transportation Certification Document (PCTCD) to verify compliance with CCP-PO-003 weight limits and center of gravity requirements. Weights are reported to the WDS/WWIS in accordance with MP-TRUW-8.5.

Additional weight limits may be implemented based on restrictions identified by procurement specifications and testing. These restrictions will also be addressed in the applicable work instructions as they are identified.

Using the WDS/WWIS shipping module, the CCP TCO confirms that the TRUPACT-II, TRUPACT-III, or HalfPACT payload assemblies are evaluated for compliance with the weight requirements identified in CCP-PO-003, using the location and weight of the individual payload containers. These weights are based on calculated payload assembly weights, TRUPACT-II or HalfPACT weights, and the reported truck weight, in accordance with CCP-TP-033. No center of gravity requirements exist for HalfPACT payloads.

3.2.3 Assembly Configurations

Acceptance Criterion. See the CH-TRAMPAC and the TRUPACT-III TRAMPAC for payload assembly configuration requirements (Reference 49 and 50).

Compliance. The maximum number of containers per TRUPACT-II, TRUPACT-III, or HalfPACT and the authorized packaging configurations are controlled in accordance with CCP-TP-033.

3.2.4 Removable Surface Contamination

Acceptance Criterion. Removable surface contamination on CH-TRU waste payload containers, payload assemblies, and packaging shall not exceed 20 disintegrations per minute (dpm)/ 100 square centimeters (cm^2) alpha and 200 dpm/100 cm^2 beta-gamma (Reference 44, Attachment A1, Section A1-1d [2]; References 5 and 37). The fixing of surface contamination to meet these criteria is not allowed by WIPP in accordance with best management practices for ensuring worker radiation dose as low as reasonable achievable (ALARA).

Compliance. Radiological technicians survey each container in accordance with INST-OI-09, Retrieval Inspection Station Operations; INST-OI-11, Waste Container Handling; CCP-TP-033; and CCP-TP-086, CCP CH Packaging Payload Assembly (Reference 61), as applicable. Containers that exceed allowable surface contamination levels are decontaminated and/or overpacked. Surveys on the loaded TRUPACT-II are performed in accordance with DOE/WIPP 02-3184, CH Packaging Operations Manual (Reference 7). Results are reported to the WDS/WWIS in accordance with MP-TRUW-8.5.

3.2.5 Identification/Labeling

Acceptance Criterion. Each payload container to be shipped in a TRUPACT-II, TRUPACT-III, or a HalfPACT shall be labeled with a unique payload container identification number using bar code labels permanently attached in conspicuous locations (Reference 49, Section 2.4, and 50, Section 2.3). The unique payload container identification number shall include a site identifier as a prefix (Reference 49 and 50, Section 6.2.1).

The payload container identification number shall be in medium to low density Code 39 bar code symbology as required by American National Standards Institute (ANSI) Standard ANSI/ Association for Automatic Identification and Mobility (AIM) BC1-1995 (Reference 55) in characters at least 1 inch high and alphanumeric characters at least 1/2-inch high. In the case of a 55-, 85-, or 100-gallon drum, or a shielded container, a minimum of three bar code identification labels shall be placed at approximately equal intervals around the circumference of the drum or shielded container (120 degrees for three labels, 90 degrees for four labels, etc.) so that at least one label is clearly visible when the drums or shielded containers are assembled into a payload (i.e., a label must be visible after slip sheets and wrapping are applied). In the case of SWBs, bar code labels are required on the flat sides of the SWB (Reference 2). For TDOPs and SLB2s, a minimum of one bar code is required.

Payload containers shall be marked “Caution Radioactive Material” using a yellow and magenta label as specified in 10 CFR § 835 (Reference 37). Those payload containers whose contents are also RCRA regulated (mixed-TRU) shall be additionally marked “Hazardous Waste” as specified in 40 CFR § 262.32 (Reference 40). For TRU and TRU-mixed wastes containing PCBs, the payload containers shall be marked in accordance with 40 CFR § 761.40 (Reference 43). Additionally, DOT Type B packages (i.e., TRUPACT-II, TRUPACT-III, and

HalfPACT) containing PCBs must be properly marked in accordance with the EPA Conditions of Approval and 40 CFR § 761.40 (References 30 and 43).

If an empty 55-, 85-, 100-gallon drum or shielded container is used as dunnage to complete a payload configuration, dunnage containers shall be labeled with the following information:

- Unique payload container identification number
- "EMPTY" or "DUNNAGE."

If a seven-pack of only dunnage 55-gallon drums, a four-pack of only dunnage 85-gallon drums, a three-pack of only dunnage 100-gallon drums, or a dunnage SWB is used in the TRUPACT-II, the container(s) shall be labeled only "EMPTY" or "DUNNAGE." The unique container identification number label is not required for these containers (Reference 49, Section 2.4.1).

Compliance. Payload containers certified for shipment by the AMWTP, are labeled in medium to low density Code 39 bar code symbology as required by ANSI standard ANSI/AIM BC1-1995 in characters at least one inch high and alphanumeric characters at least one-half inch high in the following format: BNXXXXXXXX, where BN represents AMWTP (formerly operated by BNFL, Inc.) and XXXXXXXX represents a sequential number generated by the Waste Tracking System (WTS). The WTS also verifies that the identification number is unique and that duplicate container identification numbers do not exist. Empty containers used as dunnage are labeled with a unique container identification number and "EMPTY" or "DUNNAGE."

Payload containers are marked "Caution Radioactive Material" using a yellow and magenta label as specified in 10 CFR § 835. Those payload containers whose contents are also RCRA regulated (mixed-TRU) are additionally marked "Hazardous Waste."

For TRU and TRU-mixed wastes containing PCBs, the payload containers shall be marked in accordance with 40 CFR § 761.40. Additionally, DOT Type B packages (i.e., TRUPACT-II, TRUPACT-III, and HalfPACT) containing PCBs must be properly marked in accordance 40 CFR § 761.40.

Payload containers are labeled in accordance with INST-OI-11 and/or INST-FOI-20, Supercompactor and Post-Compaction Operations, as applicable.

The CCP TCO ensures that each payload container is clearly marked with a unique identification number (bar code), radioactive material, hazardous waste and EPA hazardous waste numbers, and, when applicable, PCB labels in accordance with CCP-TP-086 and CCP-TP-033.

3.2.6 Dunnage

Acceptance Criterion. See the CH-TRAMPAC for payload assembly configuration requirements (Reference 49).

To maximize the efficiency of disposal operations at the WIPP, the use of dunnage drums should be minimized. In the event the use of dunnage drums cannot be avoided, the preferred practice for maximizing the efficiency of waste handling and the utilization of disposal room capacity is to ship them in assemblies (e.g., a seven-pack assembly of 55-gallon drums).

Compliance. The use of dunnage is minimized through load management. Dunnage containers, when used, are inspected in accordance with CCP-TP-033, to ensure compliance with packaging requirements required by CCP-PO-003. Dunnage containers are reported in the WDS/WWIS in accordance with CCP-TP-033.

3.2.7 Filter Vents

Acceptance Criterion. Containers that have been stored in an unvented condition (i.e., no filter and/or unpunctured liner) shall be aspirated for a specific length of time to ensure equilibration of any gases that may have accumulated in the closed payload container (Reference 49 and 50, Section 5.3.1).

Each payload container shall have one or more filter vents (Reference 21, Section 2.6.2; Reference 49, Section 2.5.1; Reference 50, Section 2.4.1; Reference 44, Attachment A1, Section A1-1b[2]). These filter vents shall meet the specifications of the WIPP HWFP, CH-TRAMPAC, and TRUPACT-III TRAMPAC, as applicable (Reference 44, Attachment A1, Section A1-1d (1); Reference 49, Section 2.5.1; and Reference 50, Section 2.4.1). The model number of each filter vent or combination of filter vents installed on a payload container shall be reported to the WDS/WWIS.

Compliance. QA procedures provide protocol for procuring and inspecting filters to ensure compliance with CCP-PO-003 and WIPP HWFP specifications for filter vents, which are performed in accordance with MP-PCMT-15.1 and MP-PCMT-15.21. A listing of approved filter vent models is found in DOE-WIPP-11-3384 (Reference 10).

Payload containers that have been stored in an unvented condition (i.e., no filter and/or unpunctured liner) are vented and aspirated in accordance with INST-OI-45, Drum Filter Installation; or INST-OI-50, WMF-615 Filter Insertion Operations, as applicable. In addition, the CCP ensures that payload containers that have been stored in an unvented condition are vented and aspirated in accordance with DOE/WIPP-06-3345, Waste Isolation Pilot Plant Flammable Gas Analysis (Reference 17).

Payload containers are verified prior to payload assembly to ensure the filter diffusivity has been met, as specified in Section 2.5 of CCP-PO-003 and are verified by the CCP TCO in accordance with CCP-TP-033 or CCP-TP-086 (as applicable). The model number of each filter or combination of filters installed in a payload container is recorded and reported to the WDS/WWIS in accordance with MP-TRUW-8.5 or CCP-TP-030, CCP CH TRU Waste Certification and WWIS/WDS Data Entry (Reference 59).

3.3 Radiological Properties

With respect to the required radiological properties identified within this section, they can be divided into two distinct groups.

The first group includes the activities and masses of the 10 WIPP-tracked radionuclides (i.e., ^{241}Am, ^{238}Pu, ^{239}Pu, ^{240}Pu, ^{242}Pu, ^{233}U, ^{234}U, ^{238}U, ^{90}Sr, and ^{137}Cs) and the TRU alpha activity concentration of the waste (i.e., >100 nCi/g of alpha-emitting TRU isotopes with half lives greater than 20 years). This set of radiological properties is regulated by the EPA in accordance with 40 CFR Parts 191 and 194 (References 38 and 39). Estimates of their activities and masses shall be derived from a system of controls certified by CBFO that includes AK, computations, measurements, sampling, etc. (Reference 8, Appendix TRU Waste). Appendix A provides the methods and requirements by which to characterize the radiological composition of the CH-TRU waste utilizing radioassay techniques.

The second group includes the remaining radionuclides contributing to the ^{239}Pu fissile gram equivalent (FGE), the ^{239}Pu equivalent curies (PE-Ci), and the decay heat of the payload container. This set of radiological data is regulated both by the NRC as specified in the CH-TRAMPAC (Reference 49) and the TRUPACT-III TRAMPAC (Reference 50) and by the CBFO as summarized by the WIPP DSA (Reference 21). PE-Ci quantities shall be calculated for each payload container in accordance with Appendix B. Any CH-TRAMPAC and/or TRUPACT-III TRAMPAC compliant method may be used to quantify the remaining radiological properties at the discretion of the shipping facility. Appendix A provides recommended radioassay methods by which to characterize the remaining radiological properties. However, the resulting data (e.g., AK from Safeguards and Security data), the source/method from which the data were generated, and the basis for the reliability of the data shall be submitted to and approved by CBFO prior to use.

3.3.1 Radionuclide Composition

Acceptance Criterion. The activities and masses of ^{241}Am, ^{238}Pu, ^{239}Pu, ^{240}Pu, ^{242}Pu, ^{233}U, ^{234}U, ^{238}U, ^{90}Sr, and ^{137}Cs shall be established on a payload container basis for purposes of tracking their contributions to the total WIPP radionuclide inventory (Reference 8, Appendix TRU Waste). The estimated activities and masses, including their associated total measurement uncertainties (TMUs) expressed in terms of one standard deviation, for these 10 radionuclides shall be reported to the WDS/WWIS on a payload container basis. For any of these 10 radionuclides whose presence can be substantiated from AK, direct measurement, computations, or a combination thereof, and whose measured data are determined to be below the lower limit of detection (LLD) for that radionuclide, the site shall report the character string "< LLD" to the WDS/WWIS for the activity and mass of that radionuclide; otherwise a value of zero shall be reported. Quantitative estimates for LLD shall not be used when calculating related radiological properties of the waste such as TRU alpha activity concentration, ^{239}Pu FGE, decay heat, etc. See Appendix A, Section A.3, of this document for information pertaining to the development and application of LLD.

In addition, all radionuclides other than the 10 WIPP-tracked radionuclides (i.e., ^{241}Am, ^{238}Pu, ^{239}Pu, ^{240}Pu, ^{242}Pu, ^{233}U, ^{234}U, ^{238}U, ^{90}Sr, and ^{137}Cs) that contribute to 95% of the radioactive hazard for the payload container shall be reported on the TRUPACT-II, TRUPACT-III, or HalfPACT bill of lading or manifest in accordance with 49 CFR § 172.203 and 49 CFR § 173.433 (References 41 and 42). The activities and masses of these other radioisotopes shall also be reported to the WDS/WWIS along with their associated TMU, expressed in terms of one standard deviation for each waste container.

Compliance. The quantity of radionuclides in each payload container along with the associated TMU values (expressed in terms of one standard deviation) is determined using the NDA method described in Appendix A and is performed in accordance with INST-OI-14 or INST-FOI-01. Each radionuclide quantity and its associated TMU are transferred from the drum assay system (DAS) to the WTS. The method used to perform the calculations for the radionuclides and associated TMU values are documented in the Canberra Industries, Genie 2000 Spectroscopy System Customization Tools, NDA 2000 Technical Reference Manual, and Total Measurement Uncertainty for the AMWTP Integrated Waste Assay Systems, CI-IDA-NDA-0055 (Reference A22; see Appendix A).

The WTS reports the character string "<LLD" to the WDS/WWIS for the activity and mass of the 10 tracked radionuclides (^{241}Am, ^{238}Pu, ^{239}Pu, ^{240}Pu, ^{242}Pu, ^{233}U, ^{234}U, ^{238}U, ^{90}Sr, and ^{137}Cs) whose presence can be substantiated from AK, direct measurement, computations, or a combination thereof, and whose measured data are determined to be below the LLD for that radionuclide; otherwise, a value of zero is reported. Electronic or manual entry of data into the WDS/WWIS is performed in accordance with MP-TRUW-8.5. In addition to the 10 WIPP-tracked radionuclides, ^{235}U is also quantified, if present above its LLD, in order to calculate the ^{239}Pu FGE for compliance with the TRUPACT-II and the HalfPACT requirements. All radionuclides other than the 10 WIPP-tracked radionuclides that contribute to 95% of the radioactive hazard for each payload container are also stored in the WTS.

The quantity of each radionuclide comprising 95% of the radioactive hazard whose value is above the LLD and its associated TMU expressed in terms of one standard deviation are reported to the WDS/WWIS for each waste container and on the TRUPACT-II or the HalfPACT bill of lading or manifest for each shipment.

3.3.2 ^{239}Pu Fissile Gram Equivalent

Acceptance Criterion. For each payload container, the sum of ^{239}Pu FGE plus two times its associated TMU, expressed in terms of one standard deviation, shall comply with the limits in Table 1. (Reference 21, Section 6.4.2; Reference 49; and 50, Section 3.1.1). The values calculated for ^{239}Pu FGE and its associated TMU (expressed in terms of one standard deviation) shall be reported to the WDS/WWIS for each payload container.

See the CH-TRAMPAC and TRUPACT-III TRAMPAC for ^{239}Pu FGE limits applicable to the TRUPACT-II, TRUPACT-III, and HalfPACT packaging (Reference 49 and 50).

Table 1
^{239}Pu FGE Limits for CH-TRU Payload Containers

Waste Container Type	Be/BeO Limits	Special Waste Container Geometry/Material Requirements	^{239}Pu FGE Limit
Non-Machine Compacted Waste			
55- (excluding pipe overpacks), 85-, and 100-gallon drums	≤1% by weight of the waste	None	≤200
55-gallon drum configured as a pipe overpack (i.e., a standard, S100, S200, or S300 pipe overpack)	≤1% by weight of the waste	None	≤200
Shielded Container	≤1% by weight of the waste	None	≤200
SLB2	≤1% by weight of the waste	The minimum ^{240}Pu content in grams for the SLB2 waste container, denoted in the adjacent ^{239}Pu FGE Limit column as a parenthetical, shall be determined after the subtraction of two times the error (i.e., two standard deviations).	≤325 ≤340 (5) ≤360 (15) ≤380 (25)
SWB	≤1% by weight of the waste	None	≤325
TDOP	≤1% by weight of the waste	None	≤325
55- (excluding pipe overpacks), 85-, and 100-gallon drums	>1% by weight of the waste up to 100 kg	None	≤100
SWB	>1% by weight of the waste	None	≤100
TDOP	>1% by weight of the waste	None	≤100

Waste Container Type	Be/BeO Limits	Special Waste Container Geometry/Material Requirements	^{239}Pu FGE Limit
Pipe Overpacks (i.e., a standard, S100, S200, or S300 pipe overpack)	>1% by weight of the waste	None	≤140
Machine-Compacted Waste			
55- (excluding pipe overpacks), 85-, and 100-gallon drums	≤1% by weight of the waste	Partially compacted waste. Applies to waste that has been compacted such that the distribution and form of polyethylene in the waste does not exceed 0.646 gram/cubic centimeter (g/cm^3), i.e., 70% of the theoretical full density of polyethylene (0.923 g/cm^3).	≤200
55- (excluding pipe overpacks), 85-, and 100-gallon drums	≤1% by weight of the waste	Fully compacted waste without design vertical spacing. Applies to waste that has been compacted such that the distribution and form of polyethylene in the waste exceeds 0.646 g/cm^3, i.e., 70% of the theoretical full density of polyethylene (0.923 g/cm^3).	≤170
55- (excluding pipe overpacks), 85-, and 100-gallon drums	≤1% by weight of the waste	Fully compacted waste with design vertical spacing. Applies to waste that has been compacted such that the distribution and form of polyethylene in the waste exceeds 0.646 g/cm^3, i.e., 70% of the theoretical full density of polyethylene (0.923 g/cm^3) and the dimensions of the payload containers (e.g. 100-gallon drums) ensure a minimum of 0.5 inch separation between their compacted waste contents and other axially adjacent payload containers.	≤200
Shielded Container	≤1% by weight of the waste	None	≤200

Waste Container Type	Be/BeO Limits	Special Waste Container Geometry/Material Requirements	^{239}Pu FGE Limit
SWB/TDOP	≤1% by weight of the waste	Fully compacted waste with design vertical spacing. Applies to waste that has been compacted such that the distribution and form of polyethylene in the waste exceeds 0.646 gram/cubic centimeter (g/cm^3), i.e., 70% of the theoretical full density of polyethylene (0.923 g/cm^3) and contains one 16-gauge steel 100-gallon drum having a top and bottom design spacing of 0.75 and 0.50 inches, respectively, with no loose material or other drums of waste in the SWB/TDOP.	≤250
SWB/TDOP	≤1% by weight of the waste	Fully compacted waste with design vertical spacing. Containing one 55-, 85-, or 100-gallon drum whose design ensures a minimum of 0.5-inch vertical spacing between drum contents and the exterior top and bottom of the drum (e.g., a recessed lid) with no loose material or other drums of waste in the SWB/TDOP.	≤200
SWB/TDOP	≤1% by weight of the waste	Partially compacted waste. Containing one 55-, 85-, or 100-gallon drum whose contents have been compacted such that the distribution and form of polyethylene in the waste does not exceed 0.646 gram/cubic centimeter (g/cm^3), i.e., 70% of the theoretical full density of polyethylene (0.923 g/cm^3) with no loose material or other drums of waste in the SWB/TDOP.	≤200
SWB/TDOP	≤1% by weight of the waste	Fully compacted waste with design vertical spacing. Applies to waste that has been compacted such that the distribution and form of polyethylene in the waste does not exceed 0.646 gram/cubic centimeter (g/cm^3), i.e., 70% of the theoretical full density of polyethylene (0.923 g/cm^3).	≤185

Compliance. Beryllium content is verified and documented in accordance with MP-TRUW-8.13, Collection, Review, and Management of Acceptable Knowledge Documentation. AK documentation identifies physical properties of the waste, which is augmented through INST-OI-12, Real-Time Radiography Examinations (Certification Scans); INST-OI-34, Non-Facility Visual Examination Operations; INST-FOI-17, Facility Visual Examination Operations; or INST-FOI-20.

The ^{239}Pu FGE quantities in each drum container along with the associated TMU values (expressed in terms of one standard deviation) is calculated for each container using the radionuclide values determined by the DAS and the associated ^{239}Pu FGE values tabulated in the American National Standards Institute/American Nuclear Society (ANSI/ANS) Standard 8.15-1981, Nuclear Criticality Control of Special Actinide Elements. The method that is used to perform the calculations for the ^{239}Pu FGE and its associated TMU is documented in the Canberra Industries, Genie 2000 Spectroscopy System Customization Tools, NDA 2000 Technical Reference Manual, and Total Measurement Uncertainty for the AMWTP Integrated Waste Assay Systems, CI-IDA-NDA-0055. The calculated ^{239}Pu along with its associated TMU are transferred from the DAS to the WTS in accordance with INST-OI-14 or INST-FOI-01. The WTS evaluates each payload container for compliance with the limits in Tables 3.3.2.1. The values calculated for ^{239}Pu FGE and its associated TMU (expressed in terms of one standard deviation) are reported to the WDS/WWIS for each payload container in accordance with MP-TRUW-8.5.

In addition, CCP performs nondestructive assay (NDA) measurements in support of the AMWTP using the SuperHENC in accordance with CCP-PO-002, CCP Transuranic Waste Certification Plan (Reference 57), and CCP-TP-146, CCP SuperHENC Operating Procedure (Reference 63).

3.3.3 TRU Alpha Activity Concentration

Acceptance Criterion. TRU waste payload containers shall contain more than 100 nCi/g of alpha-emitting TRU isotopes with half-lives greater than 20 years. Without taking into consideration the TMU, the TRU alpha activity concentration for a payload container is determined by dividing the TRU alpha activity of the waste by the weight of the waste. The weight of the waste is the weight of the material placed into the payload container (i.e., the net weight of the container). The weight of the waste is typically determined by subtracting the tare weight of the payload container (including the weight of the rigid liner and any shielding external from the waste, if applicable) from the gross weight of the payload container. In the event waste containers (e.g., 55-gallon drums) that have been radioassayed are overpacked in a payload container (e.g., in an SWB), sites shall sum the individual TRU alpha activity values of the individual waste containers and divide by the sum of the individual net waste weights (i.e., less container, shielding, and liner weights as appropriate) to determine the activity per gram for the payload container. Waste containers selected for payload management shall comply

with the policy for the management of TRU alpha activity concentration (see Appendix E). Loading a 55-gallon pipe-overpack with cans is considered direct loading – not overpacking for the purposes of calculating the weight of the container. The TRU alpha activity concentration shall be reported to the WDS/WWIS; however, there are no reporting requirements for its associated TMU (Reference 8, Chapter 4).

Compliance. The TRU alpha activity in each drum is determined from the alpha-emitting TRU isotopes with half-lives greater than 20 years. The TRU alpha activity is determined using the DAS in accordance with INST-OI-14 or INST-FOI-01.

The TRU alpha activity concentration for each payload container is calculated by dividing the TRU alpha activity by the net weight of the container (weight of the waste). The net weight of the container is determined by subtracting the tare weight of the container (including the weight of the rigid liner and any shielding external to the waste, if applicable) from the gross weight of the container. The TRU alpha activity concentration is transferred from the DAS and stored on the WTS. In the event a waste drum is overpacked in a payload container, the reported TRU alpha activity concentration for the payload container is determined by summing the TRU alpha activity values of the individual waste containers and dividing by sum of the net waste weights of the individual waste containers.

The WTS software evaluates each payload container for compliance with the TRU alpha activity concentration limit (>100 nCi/g). The TRU alpha activity concentration and the associated TMU are reported to the WDS/WWIS in accordance with MP-TRUW-8.5.

In addition, CCP performs NDA measurements in support of the AMWTP using the SuperHENC in accordance with CCP-PO-002, CCP Transuranic Waste Certification Plan (Reference 57), and CCP-TP-146, CCP SuperHENC Operating Procedure (Reference 63).

3.3.4 ^{239}Pu Equivalent Activity

Acceptance Criterion. PE-Ci limits are shown in Table 2. PE-Ci quantities shall be calculated for each payload container (see Appendix B) and reported to WIPP using the WDS/WWIS (Reference 21, Section 3.3.2.3.1 and Table 3.3-6). There are no reporting requirements for the associated TMU.

Table 2
PE-Ci limits for CH-TRU Waste Payload Containers

Payload Container	Packing Configuration	PE-Ci Limit
55-, 85-, and 100-gallon drum	Direct loaded – all approved waste forms other than solidified/vitrified waste	≤ 80 PE-Ci
Shielded container	Direct loaded vented 30-gallon inner steel drum – all approved waste forms other than solidified/vitrified waste	≤ 80 PE-Ci
SLB2	Direct loaded – all approved waste forms other than solidified/vitrified waste	≤ 560 PE-Ci
SWB	Direct loaded (or a bin) – all approved waste forms other than solidified/vitrified waste	≤ 560 PE-Ci
TDOP	Direct loaded – all approved waste forms other than solidified/vitrified waste	≤ 800 PE-Ci
85-gallon drum	Overpacking an undamaged[a] 55-gallon drum – all approved waste forms other than solidified/vitrified waste	≤ 1,100 PE-Ci
SWB, TDOP	Overpacking an assembly of undamaged[a] 55- or 85-gallon drums with no single payload container within the assembly exceeding 1,100 PE-Ci – all approved waste forms other than solidified/vitrified waste	≤ 1,200 PE-Ci
TDOP	Overpacking an undamaged[a] SWB – all approved waste forms other than solidified/vitrified waste	≤ 1,200 PE-Ci
Pipe overpacks (standard, S100, S200, and S300)	All approved waste forms	≤ 1,800 PE-Ci
All	Solidified/vitrified waste	≤ 1,800 PE-Ci

a. An undamaged container provides an additional barrier should a breach occur in the overpack. When overpacking one or more damaged waste containers, direct loaded PE-Ci limits apply.

Compliance. The PE-Ci for each drum is determined using the DAS in accordance with INST-OI-14 or INST-FOI-01. The DAS calculates the PE-Ci value based on the methodology described in Appendix B. PE-Ci values are transferred from the DAS and stored in the WTS. The WTS calculates the PE-Ci value for overpack configurations and evaluates compliance. The PE-Ci value is reported to the WDS/WWIS for each payload container in accordance with MP-TRUW-8.5.

3.3.5 Radiation Dose Equivalent Rate

Acceptance Criterion. The external radiation dose equivalent rate of individual payload containers shall be ≤ 200 milliroentgen equivalent man (mrem)/hour (hr) at the surface with the exception of the S100 and S300 pipe overpacks which are limited to ≤ 179 mrem/hr and ≤ 155 mrem/hr, respectively, at the surface (Reference 49 and 50, Section 3.2; Reference 21, Sections E1 and 2.1). Internal payload container shielding shall not be used to meet this criterion, except for authorized shielded payload container configurations such as the use of 55-gallon drums containing a pipe component or shielded container (Reference 49, Section 2.9). Total dose equivalent rate and the neutron contribution to the total dose equivalent rate shall be reported for each payload container in the WDS/WWIS.

See the CH-TRAMPAC and TRUPACT-III TRAMPAC for the associated package requirements (Reference 49 and 50).

Compliance. Containers are surveyed by radiological technicians and documented in accordance with INST-OI-11, INST-FOI-20, or CCP-TP-086. The highest measured combined dose rate at the drum surface is entered in the WDS/WWIS in accordance with MP-TRUW-8.5 or CCP-TP-030.

The TRUPACT-II or HalfPACT is also surveyed and the combined dose rate at the surface and 2 m from any side is recorded on the shipping documentation and reported in WDS/WWIS. Dose rates for beta-gamma and neutron dose are reported separately.

3.3.6 Decay Heat

Acceptance Criterion. See the CH-TRAMPAC and TRUPACT-III TRAMPAC for decay heat requirements (Reference 49 and 50).

Compliance. Decay heat values are determined using the DAS in accordance with INST-OI-14, or INST-FOI-01. The total decay heat from the radioactive decay of the radioisotopes within an individual payload container, and the total decay heat from all payload containers in a TRUPACT-II or HalfPACT are determined using the method described in Appendix A. The sum of the calculated value of the decay heat and the total measurement uncertainty at one standard deviation is transferred from the DAS and stored in the WTS.

The WTS and the WDS/WWIS verifies the analytical decay heat limit derived for specific shipping categories presented in Appendix 5.1 of CCP-PO-003. The decay heat value and the associated TMU are reported to the WDS/WWIS in accordance with MP-TRUW-8.5.

3.4 Physical Properties

3.4.1 Observable Liquid

Acceptance Criterion. Liquid waste is not acceptable at WIPP. Observable liquid containing PCBs is prohibited at WIPP. Liquid in the quantities delineated below is acceptable.

- Observable liquid shall be less than 1 percent[2] by volume of the outermost container at the time of radiography or visual examination (Reference 44).
- Internal containers with more than 60 milliliters or 3 percent by volume observable liquid, whichever is greater, are prohibited.
- Containers with Hazardous Waste Number U134 assigned shall have no observable liquid.
- Overpacking the outermost container that was examined during radiography or visual examination or redistributing untreated liquid within the container shall not be used to meet the liquid volume limits.

If VE is used, then the detection of any liquid in non-transparent internal containers, detected from shaking the internal container, will be handled by assuming that the internal container is filled with liquid and adding this volume to the total liquid in the container being characterized using VE (Reference 44, Part 2, Section 2.3.3.1; Reference 44, Attachment C, Sections C-1c and C-3b; Reference 49, Section 2.6.1; Reference 50, Section 2.5.1; Reference 8, Appendix TRU Waste).

Compliance. Observable liquid is verified through INST-OI-12; INST-OI-34; INST-FOI-17; or INST-FOI-20, in conjunction with MP-TRUW-8.13.

If VE is used, the detection of any liquid in non-transparent internal containers, detected from shaking the internal container, will be handled by assuming that the internal container is filled with liquid and adding this volume to the total liquid in the container. The container being characterized using VE would be rejected and/or repackaged to exclude the internal container if it is over these limits. When real-time radiography (RTR) is used, if any liquid in internal containers is detected, the volume shall be added to the total for the container.

2. The limit of "less than 1 percent" is taken from the CH-TRAMPAC and TRUPACT-III TRAMPAC and is more restrictive than the limit of "no more than 1 percent" in the HWFP.

When the sum of all liquids exceeds one percent by volume of the outermost container at the time of RTR or VE or when liquids have been identified in internal containers above specified limits, the container is segregated and sent for future treatment.

The WTS stores a description of the location of any liquid detected and an estimate of the volume. Observable liquid containing PCBs is prohibited at WIPP.

When VE is used, the liquids identified will be removed and treated as appropriate.

3.4.2 Sealed Containers

Acceptance Criterion. Sealed containers that are greater than 4 liters (nominal) are prohibited except for solid inorganic waste (Waste Material Type II.2) packaged in a metal container (Reference 49, Section 2.8.1, and Reference 50, Section 2.7.1).

Compliance. The absence of sealed containers greater than 4 liters (nominal) are verified through INST-OI-12, INST-OI-34, INST-FOI-17, or INST-FOI-20 in conjunction with MP-TRUW-8.13. Payload containers with sealed containers greater than 4 liters will be supercompacted or segregated for future treatment.

When VE is used, the VE operators remove and/or vent sealed containers.

3.5 Chemical Properties

3.5.1 Pyrophoric Materials

Acceptance Criterion. Radioactive pyrophoric materials shall be present only in small residual amounts (≤1 percent by weight) in payload containers and shall be generally dispersed in the waste. Radioactive pyrophorics in concentrations greater than 1 percent by weight and all nonradioactive pyrophorics shall be reacted (or oxidized) and/or otherwise rendered nonreactive prior to placement in the payload container (Reference 49 and 50, Section 4.1.1).

Nonradionuclide pyrophoric materials are not acceptable at WIPP (Reference 21, Section 11.4.1; Reference 44, Attachment C, Section C-1c; Reference 44, Part 2, Section 2.3.3.2).

Compliance. Nonradionuclide pyrophoric material is subject to the same controls as explosives (e.g., procurement controls and safety assessments). In general, pyrophoric materials are not permitted in TRU process areas. Processes that require the use of pyrophoric materials require a safety analysis that is used to determine the applicable controls. Generator sites administrative, operational and QA procedures dictate the quantity of pyrophoric materials that enter processes, which are limited and controlled. Operating procedures require that pyrophoric materials be rendered chemically safe by processing before being placed in payload containers (e.g., oxidation at high temperature in the presence of oxygen).

No pyrophoric materials or pyrophoric radionuclides exceeding one percent of the waste weight have been identified in any of the AK documentation, content code evaluations, or sampling programs.

3.5.2 Hazardous Waste

Acceptance Criterion. Hazardous wastes not occurring as co-contaminants with TRU wastes (non-mixed hazardous wastes) are not acceptable at WIPP. Each CH-TRU mixed waste container shall be assigned one or more EPA hazardous waste numbers, as appropriate. Only EPA hazardous waste numbers listed as allowable in the HWFP may be managed at WIPP. Some of the waste may also be identified by unique state hazardous waste codes. These wastes are acceptable at WIPP as long as the TSDF waste acceptance criteria are met (Reference 44, Attachment C, Section C-1b; Reference 44, Part 2, Section 2.3.4). Wastes exhibiting the characteristic of ignitability, corrosivity, or reactivity (EPA hazardous waste numbers of D001, D002, or D003) are not acceptable at WIPP. (Reference 44, Attachment C, Section C-1c; Reference 44, Part 2, Sections 2.3.3.3, 2.3.3.7, and 2.3.4).

Compliance. AK documentation identifies physical and chemical properties of the waste which is augmented by data collected using INST-OI-12, INST-FOI-20, INST-OI-34, or INST-FOI-17.

Waste Stream Profile Forms (WSPFs) document the hazardous waste numbers for payload containers in a waste stream. EPA hazardous waste numbers are reported in the WDS/WWIS in accordance with MP-TRUW-8.5.

3.5.3 Chemical Compatibility

Acceptance Criterion. TRU waste containing incompatible materials or materials incompatible with payload container and packaging materials, shipping container materials, other wastes, repository backfill, or seal and panel closure materials are not acceptable for transport in the TRUPACT-II, TRUPACT-III, and HalfPACT or for disposal at the WIPP. Chemical constituents shall conform to the lists of allowable materials in Tables 4.3-1 through 4.3-8 of the CH-TRAMPAC, and Tables 4.3-1 through 4.3-7 of the TRUPACT-III TRAMPAC, as applicable. Other chemicals or materials not identified in these tables are allowed provided that they meet the requirements specified in Section 4.3.1 of the CH-TRAMPAC and TRUPACT-III TRAMPAC (Reference 44, Attachment C, Section C-1c; Reference 44, Part 2, Section 2.3.3.4; Reference 49 and 50, Sections 4.3 and 4.4).

Compliance. Potential chemical incompatibilities were evaluated by the NRC for each content code, between one content code and another, and between each content code and the TRUPACT-II inner containment vessel (ICV) and the o-ring seals to ensure that the chemical processes do not threaten the safe transport of the TRUPACT-II and HalfPACT. Only waste with an approved TRUCON code will be shipped in the TRUPACT-II and HalfPACT.

Waste generated by new processes, or an existing process that has changed, will be evaluated by the WIPP CH-TRU Payload Engineer to ensure that compliance with the transportation requirements of CCP-PO-003 can be demonstrated.

Waste compatibilities with backfill, seal, and panel closure materials are verified through the use of approved CH-TRUCON codes.

All payload containers selected for shipment to WIPP are evaluated with the WIPP TRAMPAC Evaluation Software (WTES) to ensure that waste being shipped belongs to an approved CH-TRUCON Code.

3.5.4 Explosives, Corrosives, and Compressed Gases

Acceptance Criterion. Waste shall contain no explosives, corrosives, or compressed gases (pressurized containers) (Reference 44, Attachment C, Section C-1c; Reference 44, Part 2, Sections 2.3.3.5 and 2.3.3.7; Reference 49 and 50, Section 4.2.1).

Compliance. Most generator sites did not allow explosives in the same facility as TRU waste. Waste generating processes were assessed for safety hazards such as potential explosive hazards and potential inadvertent production of explosive materials. Corrosive liquids were neutralized or absorbed by the generator sites before being shipped to the INL. Content code assessments have been performed to ensure liquids have been adequately neutralized.

AK documentation identifies physical and chemical properties of the waste that is augmented by using INST-OI-12, INST-OI-34, INST-FOI-17, or INST-FOI-20.

Containers that contain compressed gases (pressurized containers) are segregated and sent for future treatment. Payload containers that contain explosives are segregated and documented on a nonconformance report (NCR).

3.5.5 Headspace Gas Concentrations

Acceptance Criterion. The headspace gas of payload containers shall be determined in accordance with a site-specific TRAMPAC (Reference 49 and 50, Section 5.2), as required.

Compliance. Waste containers intended for shipment in the TRUPACT-II or HalfPACT are sampled and analyzed by CCP to establish the concentration of flammable gases, hydrogen, and methane in accordance with DOE/WIPP-06-3345, Waste Isolation Pilot Plant Flammable Gas Analysis (Reference 17) and CCP-TP-093, CCP Sampling of TRU Waste Containers (Reference 62).

3.5.6 Polychlorinated Biphenyls

Acceptance Criterion. For TRU and TRU-mixed wastes containing PCBs meeting the conditions of approval in Reference 30, the payload container data entered into the WDS/WWIS shall include the earliest date of waste generation (i.e., the date of removal from service for disposal), the date of waste certification for disposal, and the date the waste was sent to the WIPP for disposal (Reference 30, Section III.D.4). Additionally, the estimated weight of the PCBs in kilograms (as recorded on the uniform hazardous waste manifest) and a description of the type of PCB waste (e.g., PCB remediation waste, PCB bulk product waste, etc.) shall be entered into the WDS/WWIS (Reference 43, § 761.207(a)(2) and § 761.180). Hanford, Idaho National Laboratory, Savannah River Site, Oak Ridge Reservation, Knolls Atomic Power Laboratory, and Los Alamos National Laboratory are authorized to ship their TRU and TRU-mixed wastes containing PCBs to WIPP (References 16 and 32).

Other sites in the DOE complex may also identify some TRU waste that contains PCBs during the process of characterizing their TRU waste for disposal at WIPP. Subject to NEPA review, as appropriate, CBFO will make a determination regarding the acceptability of waste from these sites at WIPP.

Compliance. AK documentation identifies the waste streams known to contain PCBs. The presence or absence of observable liquid and items suspected of containing PCBs (i.e., ballasts, transformers) are verified through INST-OI-12, INST-OI-34, or INST-FOI-17. Payload containers identified with prohibited PCBs (e.g., liquids) will be segregated and sent for future treatment. PCB out-of-service date, concentration, and description (e.g., remediation waste, bulk, etc.) are reported in WDS/WWIS per MP-TRUW-8.5.

3.6 Data Package Contents

3.6.1 Characterization and Certification Data

Acceptance Criterion. Sites shall prepare a WSPF for each waste stream. Each WSPF shall be approved by the CBFO prior to the first shipment of that waste stream. Characterization and certification information for each payload container shall be submitted to the WWIS/WDS and approved by the Data Administrator. Sites are required to estimate the CPR weights and report these estimates in the WDS/WWIS on a payload container basis. Any payload container from a waste stream that has not been preceded by an appropriate certified WSPF is not acceptable at WIPP (Reference 44, Part 2, Section 2.3.3.10).

Compliance. The Site Project Manager (SPM) or designated alternate prepares the WSPF and Characterization Information Summary (CIS) in accordance with MP-TRUW-8.14, Preparation of Waste Stream Profile Forms, and transmits a copy of the WSPF, CIS, and AK Summary Report to the WIPP for review and approval. This transmittal is coordinated with the initial characterization data transfer to the WDS/WWIS in accordance with MP-TRUW-8.5 for the data

administrator review and approval. Payload containers from a waste stream that does not have an approved WSPF will not be certified and shipped.

Payload containers are certified and sent to WDS/WWIS in accordance with MP-TRUW-8.5 for the Data Administrator review and approval. Data will only be entered into the WDS/WWIS after all reviews and quality assurance checks are complete and all open nonconformance documentation is satisfactorily closed.

The policies and methods described in Appendix E for the management of TRU alpha activity concentrations with each TRU waste payload container disposed of at WIPP are performed in accordance with MP-TRUW-8.5.

3.6.2 Shipping Data

Acceptance Criterion. Sites shall prepare either a bill of lading or a uniform hazardous waste manifest for CH-TRU waste shipments as required by the transportation requirements. The land disposal restriction notification for CH-TRU mixed waste shipments shall state that the waste is not prohibited from land disposal. (Reference 44, Attachment C, Section C-4b [2]).

Compliance. The CCP TCO verifies that all requirements for the transportation parameters have been met and completion of the signature authorizes payload containers for shipment in the TRUPACT-II in accordance with CCP-TP-033.

The AMWTP prepares a bill of lading or a uniform hazardous waste manifest, as applicable, for each CH-TRU waste shipment in accordance with MP-TRUW-8.12, Waste Receipt and Shipping Inspection.

4.0 WASTE ACCEPTANCE REQUIREMENTS AND CRITERIA FOR RH WASTE

This section identifies the requirements and associated criteria for acceptance of RH-TRU waste to be transported, managed, and disposed of at the WIPP.

Containers suspected to be RH-TRU waste will undergo preliminary characterization to ensure that the waste is candidate RH-TRU waste. RH-TRU waste will be transferred to the ICP contractor for subsequent characterization, certification, and shipment to WIPP.

5.0 QUALITY ASSURANCE REQUIREMENTS

Quality assurance is an integral part of TRU waste characterization, certification, transportation, and operation activities. This section defines the QA program requirements that provide confidence that TRU waste characterization and certification activities are performed satisfactorily. The QA requirements applicable to WIPP are addressed in the QAPD (Reference 6).

The AMWTP is responsible for developing, documenting, and implementing a site-specific QA plan that address the elements of the QAPD that apply to its program. This section defines the AMWTP QA program requirements for TRU waste characterization and certification activities. This *Certification Plan* will be submitted to the CBFO for approval before TRU wastes are characterized, certified, or shipped to WIPP. The CBFO and the Management and Operating Contractor will conduct audits and surveillances to ensure compliance with this plan.

5.1 Waste Characterization QA Requirements

MP-TRUW-8.2 documents the QA and quality control (QC) activities applicable to TRU characterization.

Data quality objectives (DQOs) are qualitative and quantitative statements that specify WIPP program technical and quality objectives; they are determined through the data quality objective (DQO) process. The DQOs for waste characterization activities relating to physical and chemical properties of the waste are contained in the QAPjP. The radioassay DQOs are given in Appendix A of this document.

Corrective Action Reports (CARs) applicable to the QAPjP requirements shall be resolved prior to waste shipment (Reference 44, Attachment C6, Section C6-4).

5.2 Waste Certification QA Requirements

This document, MP-TRUW-8.1, Certification Plan for INL Transuranic Waste, describes the QA and QC activities applicable to certification of TRU waste to the WAC and also complies with the requirements of the QAPD.

5.3 Waste Transportation QA Requirements

The AMWTP characterizes and certifies CH-TRU waste for shipment to WIPP; however, the shipment of the waste will be performed by CCP.

CCP-PO-003 describes the QA and QC activities applicable to the specific parameters of the transportation packaging methods for payload control. The development, usage, operation, and maintenance of the transportation systems are conducted under the CCP QA program approved by the DOE-CBFO. These documents control the use of the NRC-certified packaging and comply with DOE/WIPP 02-3183, CH Packaging Program Guidance (Reference 15), and RH Packaging Program Guidance (Reference 20), as applicable.

5.4 Quality Assurance Program

The AMWTP Quality Assurance Program (QAP) is based on the WIPP QAPD (Reference 6) elements outlined below. Table 5.1 provides a cross-reference of identical or related QA requirement elements from 10 CFR 830, Subpart A (Reference 36), and 10 CFR 71, Subpart H (Reference 35).

- **Organization and QA Program** (QAP) documents the organizational structure, primary interfaces, functional responsibilities, levels of authority, and lines of communication for activities affecting quality, and identifies the activities and items to which the QA program applies.
- **Personnel Qualification and Training** identifies the AMWTP qualification and training programs and plans established to ensure personnel are provided training to perform their assignments and maintain job proficiency.
- **Quality Improvement** describes the processes to detect and prevent conditions adverse to quality, pursue continuous quality improvement, and control and correct nonconforming items.
- **Documents and Records** describes the processes for preparation, review, approval, issue, use, revision, and control of the AMWTP documents and records.
- **Work Processes** identifies the processes by which work conditions, equipment, and special processes are controlled to ensure quality.
- **Procurement** identifies the technical and QA requirements for procured items and services.
- **Inspection and Testing** identifies the processes for inspection and testing.
- **Assessment Requirements** describes the requirements for conducting management and independent assessments to measure management effectiveness, item quality, and process effectiveness and to promote improvement.
- **Sample Control Requirements** identifies the requirements for the control of waste samples, including identification, handling, storing, shipping, and archiving.
- **Scientific Investigation Requirements** describes the requirements for defining, controlling, verifying, and documenting scientific investigations.
- **Software Requirements** specifies the requirements for developing, procuring, maintaining, and using software.

Table 5.1. Quality Assurance Requirements Cross-Reference Table.

QAPD and Certification Plan Section [a]	Equivalent Section in 10 CFR 830, Subpart A, Nuclear Safety Management	Equivalent Section in 10 CFR § 71, Subpart H, Quality Assurance
Organization and QA Program	Program	QA Organization QA Program
Personnel Qualification and Training	Personnel Training and Qualification	QA Program
Quality Improvement	Quality Improvement	Corrective Action Nonconforming Materials, Parts, or Components
Documents Records	Documents and Records	Document Control QA Records
Work Processes	Work Processes	Instructions, Procedures, and Drawings Identification and Control of Materials, Parts, and Components Control of Special Processes
Procurement	Procurement	Procurement Document Control Control of Purchased Material, Equipment, and Services
Inspection and Testing	Work Process and Acceptance Testing	Internal Inspection Test Control Control of Measuring and Test Equipment Inspection, Test, and Operating Status Handling, Storage, and Shipping
Assessment Requirements	Management Assessment Independent Assessment	Audits
Sample Control Requirements	Work Processes	Not applicable
Scientific Investigation Requirements	Not applicable	Not applicable
Software Requirements	Not applicable	Not applicable

a. Reference 40 CFR 194.22 source requirements.

5.4.1 AMWTP TRU Program Organization

The TRU Program organization is part of the overall AMWTP organization. This section describes the principal organizations involved, the project level positions, and their primary responsibilities. Data generation organizations also support the AMWTP. The central organizational structure is depicted in Figure 5.1.

President and Project Manager has overall responsibility for all aspects of the AMWTP, which includes permitting, operations, characterization, and certification.

Plant Manager is responsible for the production, maintenance, and implementation necessary to support waste treatment and disposal.

TRU Programs Manager has overall responsibility for successfully accomplishing activities subject to the QAPD requirements. Management provides the necessary planning, organization, direction, control, resources, and support to achieve their defined objectives. Management is responsible for planning, performing, and improving the work.

The TRU Programs Manager is also responsible for establishing and implementing policies, plans, and procedures that control the quality of work, consistent with the provisions of the Certification Plan.

The TRU Programs Manager's responsibilities include the following:

- Ensuring that adequate technical and QA training are provided for personnel performing activities subject to the QAPD
- Ensuring compliance with all applicable regulations, DOE orders and requirements, and applicable Federal, state, and local laws
- Ensuring that personnel adhere to procedures for the generation, identification, control, and protection of QA records
- Exercising the authority and responsibility to stop unsatisfactory work such that cost and schedule do not override environmental, safety, or health considerations
- Developing, implementing, and maintaining plans, policies, and procedures that implement the QAPD requirements
- Identifying, investigating, reporting, and correcting quality problems.

Quality Assurance Manager has the authority and overall responsibility to independently assess the organization's effective implementation of the QA program to verify the achievement of quality. The QA Manager has direct access and organizational freedom to communicate with responsible management where appropriate action can be effected and is sufficiently independent from cost and schedule considerations.

The Quality Assurance Manager's responsibilities include the following:

- Reviewing the QAPjP and subsequent revisions
- Scheduling and conducting QA assessments

- Maintaining liaison with participant QA organizations and other affected organizations
- Ensuring the preparation, review, and issuance of QA plans and procedures that implement the provisions of the QAPD
- Reviewing and approving supplier and subcontractor QA plans
- Tracking or performing trend analysis of quality problems and reporting quality problem areas
- Providing for the administrative processing of documentation concerning conditions adverse to quality
- Developing, establishing, and interpreting QA policy and ensuring effective implementation
- Interfacing, as appropriate, with CBFO staff, participants, and other stakeholders on QA matters
- Assisting subordinate organizations with QA planning, documentation, quality measurement, and problem identification and resolution
- Providing guidance to all applicable subordinate organizations concerning identification, control, and protection of QA records
- Summarizing all relevant information on the QA/QC activities during the period in a semi-annual report and distributing it to DOE and the SPM.

The QA Manager ensures that the QA organization has sufficient authority, access to work areas, and organizational freedom to identify quality problems, recommend solutions, verify implementation of solutions and ensure that unsatisfactory conditions are controlled until proper disposition has occurred.

Site Project Manager has overall responsibility for ensuring that TRU waste is successfully characterized in accordance with the WIPP WAP and meets the requirements of the WIPP WAC and the CH-TRAMPAC, Remote-Handled Transuranic Waste Authorized Methods for Payload Control (RH-TRAMPAC), and MP-TRUW-8.2, as applicable. The SPM (or designated alternate) responsibilities include:

- Reviewing and approving the QAPjP and subsequent revisions before it is submitted to CBFO for approval
- Waste selection and tracking
- Data validation/verification
- Data reconciliation with DQOs

- Assignment of EPA Hazardous Waste Numbers
- QA/QC reports to Department of Energy Idaho Operations Office (DOE-ID)
- Data transmittal to CBFO.

The SPM reviews the semiannual report, comments if appropriate, and forwards a copy of the report with comments to DOE-ID.

Waste Certification Official (WCO), or designated alternate, is responsible for documenting and certifying that all TRU waste payload containers prepared for shipment to the WIPP meet all the requirements specified in the WAC, and for transmitting the waste certification data to the WIPP. The WCO is responsible for final compilation and approval of TRU Waste Certification Statements.

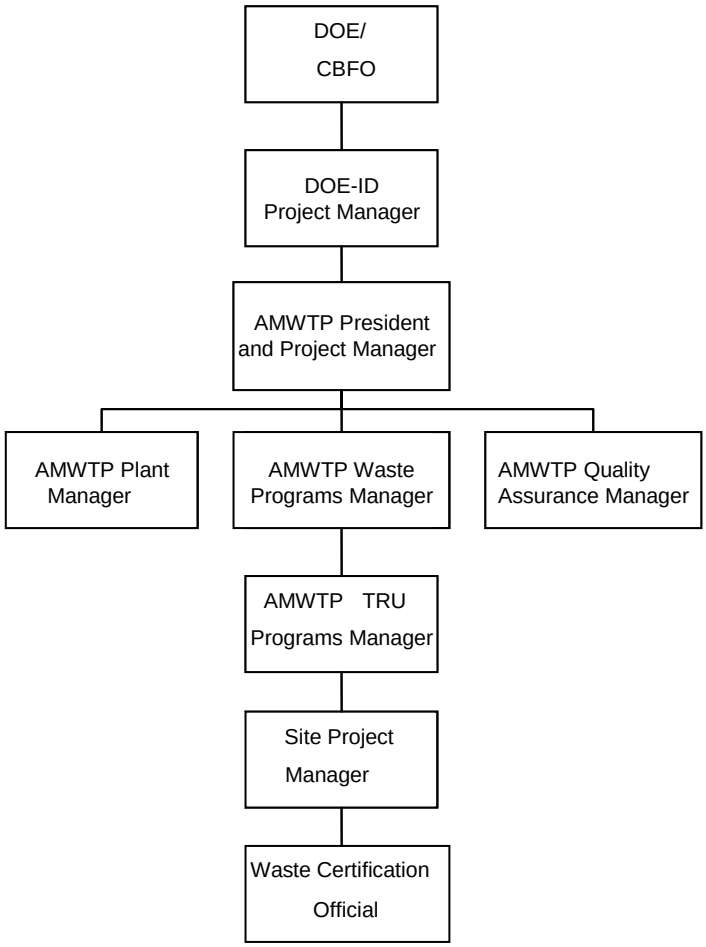

Figure 5.1 AMWTP TRU Program Organization Structure.

5.4.2 AMWTP QA Program Description

This QAP applies to items and activities affecting AMWTP quality. The QA Organization verification of the achievement of quality is accomplished through reviews, assessments, surveillances, inspections, and approval and control of records and documents. All personnel involved with TRU waste characterization, and certification are responsible for the quality of their activities and products. If work is delegated, the individual making the delegation retains responsibility for the delegated work. The QA Manager and the responsible manager will resolve disputes related to QAP requirements.

AMWTP TRU Program personnel plan certification activities and document this process. Planning documentation is subject to review by TRU Program management and subject matter experts (SMEs). Project planning documentation consists of the documents discussed in this section, implementing procedures, and training plans. These documents establish performance criteria and methods to measure performance relevant to the AMWTP. All Site Project Office (SPO) personnel are accountable for ensuring quality within their assigned areas of responsibility. The QA Manager (or designee) is responsible for verifying the achievement of quality requirements and evaluating the effectiveness of this QAP, which is accomplished through internal reporting procedures, assessments, and surveillances performed in accordance with MP-M&IA-17.1, Management Assessment; MP-M&IA-17.2, Independent Assessment; and MP-M&IA-17.3, Quality Assurance Surveillance, respectively.

AMWTP management at all levels has established communication channels that provide timely and wide dissemination of information related to performance, which includes:

- QA program status
- Status and resolution of significant quality problems
- Lessons learned
- Quality improvement
- Results of trend analysis.

5.4.3 Implementation of the CBFO QA Program

The provisions of the AMWTP QAP are implemented through the use of numerous program documents and procedures. The relationships between the various external requirements sources and AMWTP programmatic and implementing documents are depicted in Figure 5.2, AMWTP TRU Program document hierarchy. Implementing procedures are listed within sub-tier program plans, matrices, or other documents. Documents that collectively define these activities are presented in Figure 5-2.

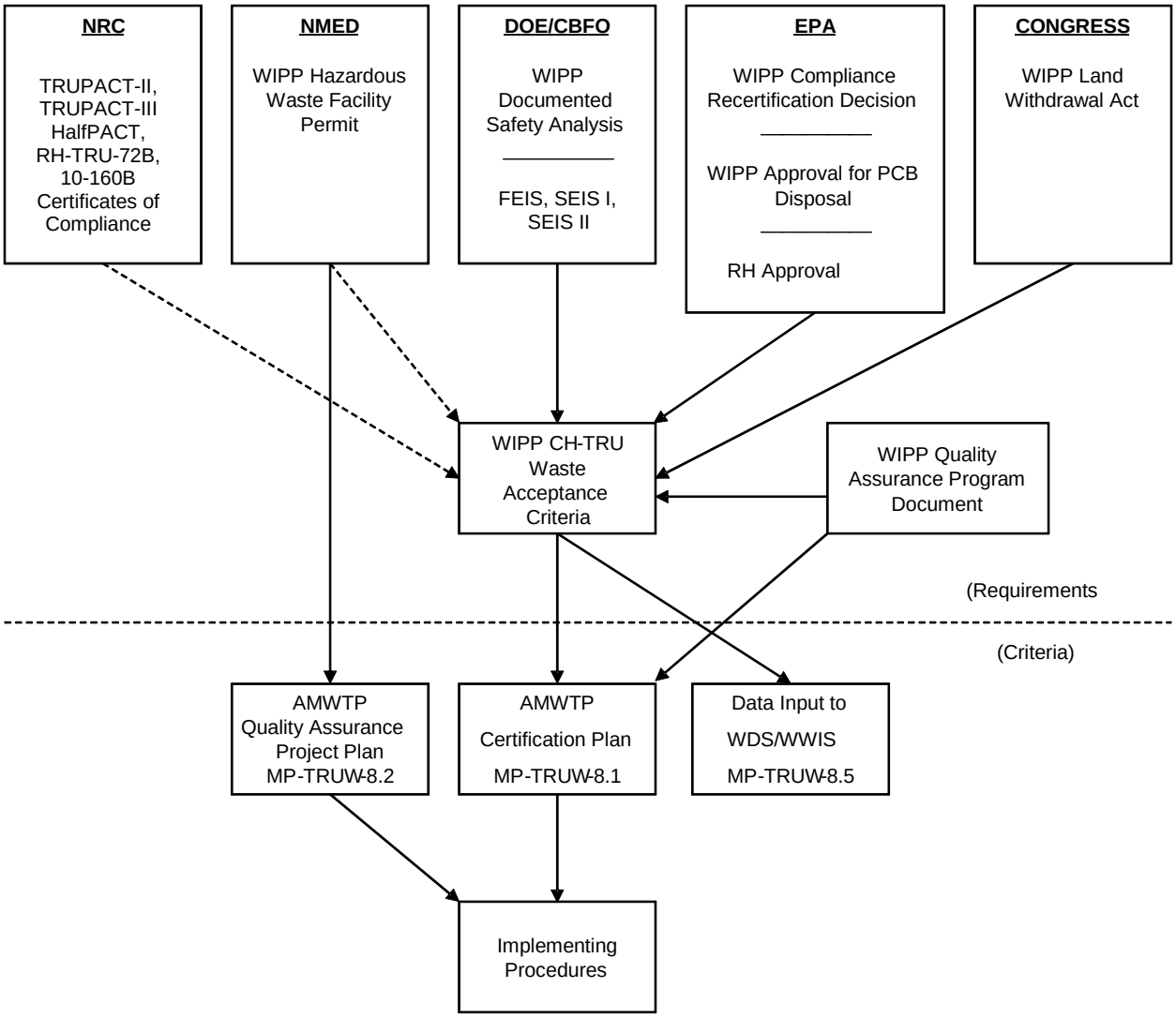

Figure 5.2 AMWTP TRU Program document hierarchy.

5.4.4 Graded Approach

Implementation of the AMWTP QAP is based on the application of the graded approach. The levels of analysis, documentation, verification, and other controls are applied commensurate with an item's risk and importance. The AMWTP graded approach process is implemented in accordance with MP-Q&SI-5.6, Graded Approach. The AMWTP QA Manager is responsible for review and concurrence with quality level designations for the AMWTP systems, structures, and components. MP-Q&SI-5.6 is submitted to the CBFO QA Manager for approval.

5.5 Personnel Qualification and Training

Personnel performing waste characterization and certification activities affecting quality are qualified and trained to ensure that suitable proficiency is achieved and maintained in the performance of their assigned tasks.

5.5.1 Qualification

The appropriate managers, with support of the training organization, determine job positions and qualification standards for each job category relevant to the AMWTP. Task responsibilities for personnel are analyzed in accordance with MP-RTQP-14.6, Job Analysis. Education, experience, and training prerequisites commensurate with minimum requirements are included in the qualification packages in accordance with MP-RTQP-14.4, Personnel Qualification and Certification.

5.5.2 Training

Managers ensure that AMWTP personnel receive indoctrination and training on the scope, purpose, and objectives of the WIPP Program and the specific Quality Assurance Objectives (QAOs) of the tasks being performed. Personnel performing activities affecting quality are trained according to their respective training plans to ensure they achieve and maintain proficiency prior to performing any tasks subject to these QAP requirements. Personnel receive training, including on-the job training and hands-on training, as needed, to achieve initial proficiency and continuing training requisite with their activities and level of responsibility to maintain proficiency; and adapt to changes in technology, methods, job responsibilities and authority, and QA implementing procedures in accordance with MP-RTQP-14.1, Preparation and Administration of Training Plans, and MP-RTQP-14.4.

Training is designed, developed, conducted, and evaluated in accordance with approved AMWTP training procedures. Training programs may include classroom instruction, practical hands-on experience, supervised on-the-job training, self-paced individual study, and written, oral, or practical demonstration of worker competence.

The period of effectiveness for qualification associated with special processes, operations that require special skills, and the requalification criteria are specified or referenced in MP-RTQP-14.4 or supporting training program plans.

Nondestructive examination (NDE) and NDA are considered to be characterization processes. Personnel performing NDE are qualified to a program based on the American Society of Nondestructive Testing (ASNT) Recommended Practice No. SNT-TC-1A, June 1980 Edition. Later editions of SNT-TC-1A may be used as long as the minimum requirements of the June 1980 edition are met. Personnel performing NDA are qualified to American Society for Testing and Materials (ASTM) C1490, Standard Guide for Selection, Training and Qualification of Nondestructive Assay (NDA) Personnel. Training is subject to ongoing review to determine instruction and training program effectiveness and shall be upgraded whenever improvements or enhancements are identified.

Personnel performing TRU Program activities affecting quality receive indoctrination in the following:

- General criteria, this QAP, and applicable codes, regulations, and standards
- Specific criteria, including the QAPjP, Certification Plan, CH-TRAMPAC, and any implementing procedures, as applicable.

Auditable records documenting the required training and qualifications are maintained as QA records and controlled in accordance with MP-RTQP-14.19, Training Records Administration.

5.6 Quality Improvement

AMWTP personnel continually evaluate and improve project activities. Personnel are responsible for identifying nonconforming items and processes that do not meet established requirements in accordance with MP-Q&SI-5.4, Identification of Nonconforming Conditions, and MP-Q&SI-5.3, Corrective Action.

5.6.1 Quality-Affecting Problems

Quality-affecting problems, items, services, and processes that do not meet established requirements are identified, documented, reported, controlled, and corrected. Management at all levels fosters a “no-fault” attitude to encourage the identification of nonconforming items and processes.

Quality-affecting problems involve noncompliance with a QA program requirement or a nonconforming item that does not conform to specific requirements (i.e., suspect or counterfeit items or data). A noncompliance with QA program requirements is classified either as a condition adverse to quality or as a significant condition adverse to quality.

5.6.2 Nonconforming Items

Nonconformances are uncontrolled and unapproved deviations from an approved plan or procedure. Nonconforming items are those that do not meet the AMWTP requirements, procurement document criteria, or approved work procedures. All AMWTP personnel are responsible for promptly reporting any nonconformance condition identified as adverse to quality to management. Nonconformance reports (NCRs) are processed electronically in the AMWTP issues management system, TrackWise.

MP-Q&SI-5.4 also assigns responsibilities to AMWTP organizations and personnel to identify, report, control, evaluate the nonconformances, obtain and document a disposition, determine cause, track, and define corrective action for reported nonconforming items. It also describes the methods to identify nonconforming items by marking, tagging, segregating, or other methods that do not adversely affect the end use. Identification of nonconforming items is not solely reliant on administrative means.

An NCR is prepared for each nonconformance identified, including or referencing, as appropriate, results of QC tests, audit reports, internal memoranda, or letters. The NCR provides the following information:

- Identification of the individual(s) identifying or originating the nonconformance
- Description of the nonconformance
- Method(s) or suggestions for correcting the nonconformance (corrective action)
- Schedule for completing the corrective action
- An indication of the potential ramifications and overall usability of the data, if applicable
- Any approval signatures specified in the site nonconformance procedures.

The SPM (or designated alternate) oversees the NCR process and is responsible for identifying and tracking all nonconformances and reporting to CBFO. The SPM and the QA organization are notified when a nonconformance related to the waste characterization and certification processes is observed or detected. Operations, QA, and the SPM are responsible for evaluating nonconformances and taking appropriate corrective action.

Any waste container for which an NCR has been written will not be shipped to the WIPP facility unless the condition that led to the NCR for that container has been dispositioned.

The CBFO receives written notification within seven calendar days of any non-administrative nonconformances related to the applicable requirements in the WAP (that is, a failure to meet a DQO) which are first identified at the SPM signature release. NCRs are submitted to CBFO

within 30 calendar days of identification of the incident (Reference 44, Section C3-13) in accordance with MP-Q&SI-5.4.

5.6.3 Conditions Adverse To Quality

A condition adverse to quality is an all-inclusive term used in reference to failures, malfunctions, deficiencies, and nonconforming items, materials, parts, components, data, and processes. Significant conditions adverse to quality are those that, if uncorrected, could have a serious effect on safety, operability, waste characterization and certification, or effective implementation of the QA program.

Conditions adverse to quality are investigated, documented, and classified according to their significance, including the extent of the condition and the impact on completed work. As appropriate, corrective action plans are developed, documented and implemented as soon as practicable. Any condition adverse to quality determined to be noncompliant with a WAP condition or requirement will be documented in accordance with MP-Q&SI-5.3 for development of a corrective action plan to meet the requirements of Section 5.6.4.

Significant conditions adverse to quality are reported and evaluated by the AMWTP QA Manager (or designee), other relevant regulatory compliance organizations (e.g., environmental and safety), and the responsible management, to determine if a work suspension is necessary. If a work suspension is warranted, the AMWTP QA Manager (or designee) verifies and documents the completion of applicable corrective actions prior to any management action releasing the work suspension. AMWTP work suspensions are processed in accordance with MP-Q&SI-5.4.

The QA Manager (or designee) ensures quality in the TRU Program by identifying and reporting conditions adverse to quality, analyzing trends, reporting and tracking nonconformances, and implementing corrective actions in accordance with MP-Q&SI-5.1, Investigations and Root Cause Analysis. These quality improvement activities detect and prevent unacceptable quality problems and thereby increasing accuracy and reliability, and reducing variability.

The CBFO is notified of CARs that relate to violations of the AMWTP QAPjP. Corrective action plans relating to these violations of the QAPjP address corrective action planning and follow-up for significant conditions adverse to quality. Instructions governing these activities are detailed in procedures referenced in MP-Q&SI-5.4.

5.6.4 Corrective Action

Corrective actions are planned and prepared for all significant conditions adverse to quality and for any violation of the WAP. The quality systems established for corrective actions and reporting are described in MP-Q&SI-5.3. The AMWTP identifies and implements corrective actions before TRU waste is shipped to WIPP. Corrective Action Reports generated by CBFO are tracked in hard copy and processed per CBFO instructions. These corrective actions address considerations including:

- Remedial Action – Actions to resolve the initial problem
- Investigative Actions – Assess the extent and impact of the significant condition adverse to quality
- Root Cause Determination – Root cause of the problem
- Actions necessary to prevent recurrence
- Schedule – Responsible personnel, responsibilities, and expected completion dates for the required actions
- Verification of corrective action implementation.

5.6.5 Improvement Analysis and Trending

Performance data are identified, collected, and routinely analyzed to identify opportunities to improve items, services, activities, and processes. Analysis of quality performance data serves to identify trends adverse to quality. These analyses shall consider information from external sources and not be limited to one type of work or to one organization. Reports of conditions adverse to quality are evaluated to identify adverse quality trends and root causes, with results reported to responsible management and to the applicable quality assurance organization. The QA Manager (or designee) is responsible for generating a trend analysis report semiannually in accordance with INST-Q&SI-5.1.1, Trending.

When conditions adverse to quality are identified on a recurring basis, actions are taken to evaluate those conditions in order to minimize their impact and to preclude recurrence. For recurring conditions adverse to quality, management shall, as appropriate:

- Determine the events leading to the occurrences
- Develop an understanding of the technical and work activities associated with the conditions adverse to quality

- Ascertain and identify any generic implications and impacts on completed work
- Determine the extent to which similar quality problems, or precursors to the problem, have been recognized by the responsible organization
- Determine the effectiveness of any corrective actions that were taken
- Consider suspending work associated with the applicable activity
- Suggest actions that can be taken by the responsible organization to preclude recurrence.

5.7 Documents and Records

5.7.1 Document Control

Documents that specify quality requirements or establish activities affecting quality are controlled to ensure that accurate and current documents are used. AMWTP personnel prepare and control documents supporting quality in accordance with MP-DOCS-18.4, Document Control. Document owners ensure that documents are developed, reviewed for adequacy, correctness, completeness, and are approved and revised, as needed. Document control personnel verify proper document approval and ensure the documents are distributed to the appropriate personnel.

5.7.1.1 Document Preparation, Review, Approval, and Issuance

Instructions, procedures, and drawings are reviewed for adequacy, correctness, and completeness prior to approval and issuance. MP-DOCS-18.1, Developing Written Work Instructions, addresses approved AMWTP policies and procedures for the initiation, preparation, review, and revision control of work instructions, and MP-DOCS-18.3, Developing Management Procedures, addresses approved AMWTP policies and procedures for the initiation, preparation, review, and revision control of management procedures for all quality-related activities.
Non-routine/temporary processes may be addressed by making temporary changes in procedures and plans. CBFO approves quality-affecting changes prior to implementation.

Qualified and independent personnel review all quality documents for adequacy, correctness, and completeness prior to approval and issuance. MP-DOCS-18.4 identifies the individuals and/or organizations responsible for the preparation, review, approval, and issuance of controlled documents.

- Documents are controlled during the review and approval phase, by the document owner.

- The requesting organization identifies the applicable criteria for the review. These criteria consider technical adequacy, accuracy, completeness, and compliance with established requirements.
- Pertinent background information or data are made available by the organization requesting the review if the information is not readily available to the reviewer.
- The review will be performed by individuals other than the originator.
- Reviewers are technically competent in the subject area being reviewed.
- The organization or technical discipline affected by the document reviews the document according to the established review criteria.
- The appropriate quality assurance organization reviews documents that translate CBFO QAPD, or other CBFO, requirements.
- Review comment documentation is resolved by the document owner. Evidence of review comment resolution is maintained in the document case files.
- Designated individuals or organizations issue documents.

Distribution and use of controlled documents and forms that document or prescribe work, including changes and editorial corrections to documents are described in MP-DOCS-18.4.

Changes to WAP-related plans and procedures are reviewed and approved by the SPM and the QA Manager. All non-administrative changes are reviewed and evaluated to determine whether changes will affect performance criteria or data quality, such as sample handling and custody requirements, sampling and analytical procedures, quality assurance objectives, calibration requirements, or QC sample acceptance criteria. Any changes to WIPP WAP related plans or procedures that could positively or negatively impact data quality (that is, those changes that require prior approval of WIPP as defined in Section C5-2 of the WIPP WAP) shall be reported to CBFO within five days of identification by the Project Level review.

5.7.2 Records

A QA record is an authenticated record that provides objective evidence of the quality of items and/or activities. QA records are controlled and maintained to certify compliance with requirements and to reflect completed work. The QA records are identified, indexed, classified, controlled, maintained, and dispositioned by records management personnel as described in MP-DOCS-18.2, Records Management.

Records related to waste characterization are maintained in the testing facility files at the AMWTP or at the WIPP Records Archive Facility. Raw data obtained by testing, TRU waste in support of this document is identifiable, legible, and provides documentary evidence of quality.

Records that are designated as lifetime records shall be maintained for the life of the waste characterization program plus six years or transferred for permanent archival storage to the WIPP Records Archive Facility. Waste characterization records designated as nonpermanent records shall be maintained for 10 years from the date of record generation and then dispositioned according to the approved records inventory and disposition schedule, or at the WIPP Records Archive Facility. If the AMWTP ceases to operate, records will be transferred before closeout for management at the WIPP Records Archive Facility.

All records relevant to an enforcement action under the WIPP Permit (Reference 44), regardless of disposition, will be maintained by the AMWTP until NMED determines that the records are no longer needed for enforcement action. The records will then be dispositioned as specified in MP-DOCS-18.2.

5.8 Performance Requirements

The work processes and items supporting and affecting quality are controlled through approved plans and procedures. Technical and QA personnel comply with the applicable technical standards and administrative controls described in procedures, which are reviewed and approved by the SPM (or designee), the QA Manager (or designee), and cognizant management for use in the TRU Program. Cognizant managers ensure personnel perform work following established procedures. These procedures provide the following information:

- Organizational and individual responsibilities
- Training and qualification requirements
- Technical, regulatory, and QA requirements
- Step-by-step instructions for the process (prepared by an SME of the cognizant organization)
- Equipment specifications
- Methods and criteria for ensuring and verifying the acceptability of equipment and materials used in the process (e.g., calibration)
- Requirements, precautions, process parameters, and other limiting conditions
- Products of the process
- Quantitative and/or qualitative criteria for determining that prescribed process activities have been performed satisfactorily
- Records generated by the process
- Package and design control of equipment and materials.

The SPM and cognizant managers ensure that activities are controlled and conducted in accordance with process-specific procedures that describe and control work processes applicable

to TRU waste characterization and certification. If equipment is designed for TRU waste characterization and certification, site personnel comply with requirements of the QAPD for design control. Each individual performing the work is responsible for ensuring that work processes are controlled and comply with established criteria. Facility managers are responsible for ensuring that workers have the correct procedures, materials, and training to perform quality work. All instructions and procedures are maintained current with a documented and controlled method of revision. Instructions, procedures, and drawings are readily available to AMWTP personnel at locations requiring their use.

Fabrication, installation, and inspection processes that have an effect upon the quality of items or services important to safety are controlled by process procedures.

Special processes controlled under this QAP are NDE, and NDA. These processes are controlled through the use of approved procedures.

5.9 Design Control

Design Control is not applicable to the AMWTP TRU Program QA requirements.

5.10 Procurement

The AMWTP ensures that procurement of items and services important to safety and quality meet requirements and perform as intended. Procurement controls are also applicable to equipment and services that directly affect testing data quality. Project personnel adhere to procurement and record-keeping practices established in written procedures.

The procurement criteria are implemented according to the procedures specified in the following subsections.

5.10.1 Procurement Document Control

The AMWTP Acquisition Services Manager and AMWTP QA Manager ensure personnel control procurement documents in accordance with MP-PCMT-15.1. Procurement documents supporting waste management must include required specifications and acceptance criteria. Procurement documents are reviewed by appropriate organizations and engineering disciplines to ensure that they contain adequate scope of work, technical requirements, supplier QA program requirements, and provisions for acceptance.

5.10.2 Control of Purchased Items and Services

The AMWTP Acquisition Services Manager and QA Manager ensure that personnel control items and services purchased (including supplier evaluations and inspections) in accordance with MP-PCMT-15.21. Documentary evidence that items, material, and equipment conform to the procurement specifications is provided before installation or use of the item, material, and

equipment, and is retained in accordance with MP-PCMT-15.1. Potential suppliers of goods and services will have their own QA program or will comply with applicable AMWTP requirements. Measures are established to ensure that materials, parts, and components used for repair work for maintenance purposes, are adequately identified to preclude the use of incorrect or defective items. Also, where replacement of limited-life items is specified, measures are established to preclude use of items whose shelf life or time in operation has expired.

5.10.3 Control of Subcontractors

MP-PCMT-15.1 also applies to subcontractors who perform work that directly affects the quality of characterization and certification data. Subcontractors are required to establish procurement controls and a QA program to ensure that purchased materials, equipment, and services conform to AMWTP procurement and QAP procedures. The controls must include provisions, as appropriate, for source evaluation and selection, objective evidence of quality furnished by the contractor or subcontractor, inspection at the contractor or subcontractor source, and examination of products on delivery. Subcontractors are subject to periodic assessments and audits at intervals consistent with the importance, complexity, and quantity of the product or services provided, to ensure compliance with procurement requirements.

Subcontractors may support activities under a “staff augmentation” role or for procurement of products and services. The staff augmentation subcontractors operate under the purview of this QAP and are subject to all applicable requirements for the AMWTP-related functions they perform. All subcontractors who support the AMWTP will be informed of the need to perform operations in compliance with QAPD requirements.

5.11 Inspection and Testing

Equipment is tested, inspected, and identified, in accordance with MP-PCMT-15.21. AMWTP personnel identify and control items (e.g., items with limited shelf or operating lives, materials, equipment, samples) and ensure that only correct and accepted items are used. This procedure addresses planning, parameters for evaluation, techniques to be used, and qualification of inspection and test personnel; hold points, documentation, acceptance criteria, and organizational responsibilities.

AMWTP personnel routinely test and inspect items and processes and control, calibrate, and maintain equipment to ensure proper operation and data quality. MP-PCMT-15.21 implements an inspection program that establishes criteria for inspection of activities affecting quality by, or for, the organization performing the activity, and to verify conformance with the requirements for accomplishing the activity. Personnel performing the inspections are independent from the individuals performing the activity being inspected. Equipment modifications, repairs, and replacement are inspected in accordance with the original design and inspection requirements, unless an approved alternative exists. The inspection program also provides for identification and documentation of deficiencies discovered during the inspection. Identification and documentation of deficiencies are accomplished in accordance with MP-Q&SI-5.4.

Measures are established to indicate, by the use of markings, tags, stamps, labels, routing cards, or other suitable means, the status of inspections and tests performed. These measures provide for the identification of items that have satisfactorily passed required inspections and tests, where necessary, to preclude inadvertent bypassing of the inspections and tests.

Measuring and test equipment with the necessary range and accuracy is provided to qualified personnel for the inspection, test, and acceptance of material, parts, components, and systems. Equipment accuracy is ensured by periodic calibration that is traceable to national standards or a documented equivalent basis for calibration.

The AMWTP ensures that equipment used for inspection and testing is properly controlled, calibrated, and maintained in accordance with MP-CMNT-10.5, Measuring and Test Equipment Program.

The test control program is established for items and services important to safety. No testing requiring a test control program relative to waste payload containers will be performed under this program.

5.12 Assessment Requirement

The AMWTP participates in an assessment program to ensure compliance with applicable QA requirements. Management assessments are performed on every level of management. Qualified personnel who are independent from the activities being assessed perform independent assessment and surveillance activities. The CBFO and external regulatory agencies also conduct assessments of the AMWTP. The QA Manager, or designee, tracks deficiencies identified during assessments and the corrective actions to resolve deficiencies according to MP-Q&SI-5.3.

5.12.1 Management Assessments

The AMWTP managers periodically assess the performance of their organization to determine the effectiveness of QAP provisions that enable the organization to comply with requirements of the WIPP WAP, QAPD, WIPP WAC, and CH-TRAMPAC, as applicable. Managers evaluate the

QAP effectiveness by focusing on the identification and resolution of both systemic and management issues and problems, and by identifying strengths and weaknesses to facilitate actions to improve quality, efficiency and cost-effectiveness. The management assessment should include an introspective evaluation to determine whether the entire integrated management system effectively focuses on meeting strategic goals. Management assessments are conducted as described in MP-M&IA-17.1. The SPM is responsible for ensuring that assessments affecting TRU Program characterization and certification are conducted regularly and reported at least annually on relevant findings.

5.12.2 Independent Assessments

Documented independent assessments are used to measure item service and quality, process adequacy and effectiveness, and to promote improvement. AMWTP personnel and facilities are subject to periodic independent assessments as identified by the QA Manager, or designee. The QA Manager, or designee, ensures that characterization facilities and analytical laboratories are assessed.

Assessment teams include one or more qualified assessors, one of whom must be a certified lead assessor. Assessment personnel qualifications are addressed in MP-Q&SI-5.8, Qualifying Supply Chain Inspectors, Auditors, Lead Auditors, and Technical Specialists.

The assessment team is made up of a team leader appointed by the QA Manager, or designee, and team members and technical specialists selected by the team leader in conjunction with the QA Manager. The team leader provides indoctrination and supervision of the team, organizes and directs the assessment, establishes the scope of the assessment, prepares a plan for conducting the assessment, and prepares and issues an assessment report to the management of the assessed organization and any affected organizations. The assessment team members and technical specialists prepare the assessment checklist, conduct the assessment, brief the management of the assessed organization on a daily basis, and prepare presentation for the exit. Independent assessments are performed in accordance with MP-M&IA-17.2.

The QA Manager, or designee, ensures the acceptable knowledge process and waste stream documentation is evaluated through internal assessments by the AMWTP quality organization and assessments by auditors or observers external to the AMWTP.

5.12.3 Surveillances

The surveillance program is conducted primarily to monitor work in progress and to follow up on corrective actions. Surveillance results are reported and monitored similarly to other assessment activities. Surveillances are performed in accordance with MP-M&IA-17.3.

5.12.4 CBFO Audits

Facilities participating in characterization, certification, and shipment of waste to WIPP are subject to CBFO audits, as discussed in Attachment C6 of the WIPP WAP (C-4b [1][iii]). CBFO will conduct an initial audit prior to certifying AMWTP for shipment of TRU mixed waste to the WIPP facility. This initial audit will establish an approved baseline that will be reassessed annually. These audits are the responsibility of the CBFO QA Manager, who coordinates these audits through the SPM.

The CBFO is responsible for granting or suspending a site's authority to certify and ship TRU waste based upon an assessment of their documented TRU waste program and its implementation. Subsequent to the initial audit, the CBFO will perform audits at least annually. CBFO may also perform unannounced audits and surveillance's at the AMWTP to confirm continued compliance with the approved plans.

5.12.5 Reports to Management

The QA Manager or designee shall summarize all relevant information on the QA/QC activities during the period in a semi-annual report. The QA Manager or designee reports these independent assessment results to the SPM in accordance with MP-TRUW-8.26, Reports to Management. The SPM shall review the report; comment, if appropriate, and then forward a copy of the report with comments to the DOE Field Office and the AMWTP General Manager. The annual QA report includes the following information, as appropriate:

- Any changes to the AMWTP QAPjP
- Identification of any significant QA/QC problems, recommended solutions, and corrective actions
- An assessment of QC data collected during the period, including the frequency of repeated analyses, reasons they were repeated, and corrective actions
- Discussions of whether QAOs have been met and any resulting impact on decision making
- Limitations on the use of measurement data
- Status of Performance Demonstration Program (PDP) results
- Results of audits and surveillances conducted during the period.

The AMWTP also participates in the NDA PDP as summarized in the Appendix A of this document. The AMWTP demonstrates compliance with the QAO for precision and accuracy by performing replicate processing of a mock waste container containing quantities of TRU isotopes for each range for which the measurement system is to be qualified. Results are reported to CBFO for evaluation and approval of the system.

5.13 Scientific Investigation Requirements

The AMWTP uses data validation as a systematic process for reviewing data to ensure that data are of known and documented quality and that the required DQOs are met. Results of the review may require that qualifiers be placed on the use of the data.

All data are reviewed and approved by qualified personnel prior to being reported. Personnel performing validation at the AMWTP are trained to the existing industry standardized training requirements (e.g., ASTM C1490, Standard Guide for Selection, Training and Qualification of Nondestructive Assay [NDA] Personnel).

The Independent Technical Reviewer is independent of the collection activities and the results of the review are documented as defined in MP-TRUW-8.8, Level I Data Validation. The review ensures the following as applicable:

- Data are recorded so that it is clearly identifiable and traceable to the source of generation.
- Data transferred and reduced from logbooks, data sheets, and radioassay instrumentation are evaluated to determine if the data were collected in a technical correct manner.
- Deviations are documented.
- QA results are complete and documented correctly.
- Results are compared to the acceptance criteria to determine if the data are valid.
- Data that are determined to be rejected, superseded, or otherwise unsuited for their intended use, are controlled to prevent their inadvertent use. Controls include the identification, segregation, and disposition of inadequate data. The basis for the disposition of erroneous data is justified and documented in accordance with MP-Q&SI-5.4.
- All data records from logbooks, data sheets, or radioassay instrumentation are maintained in accordance with MP-DOCS-18.2.

5.14 Software Requirements

Computer software used in the manipulation or production of data in the processing, gathering, or generation of information whose output is relied upon to make design, analytical, operational, or compliance related decisions in the performance of waste characterization, waste transportation, or waste acceptance is developed and maintained in a controlled manner. Computer hardware/software configurations used in AMWTP activities are developed, documented, verified, validated, tested, and controlled prior to use in compliance with requirements contained in the QAPD. Instructions governing these activities are detailed in MP-CD&M-11.2, Software Quality Assurance.

6.0 REFERENCES

NOTE: *The current revision of the referenced documents is applicable. The Internet links are provided for information purposes only and may change without prior notification.*

DOE Documents

1. DOE Order 414.1C, *Quality Assurance*, U.S. Department of Energy. (http://www.directives.doe.gov/pdfs/doe/doetext/neword/414/o4141c.pdf)
2. DOE Guide 435.1-1, *Implementation Guide for Use With DOE M 435.1-1*, Chapter III, Section III.L, U.S. Department of Energy. (http://www.directives.doe.gov/pdfs/doe/doetext/neword/435/g4351-1ch3.pdf)
3. DOE Order 460.1C, *Packaging and Transportation Safety*, Department of Energy, Washington D.C. (http://www.directives.doe.gov/pdfs/doe/doetext/neword/460/o4601b.html)
4. DOE Order 460.2, *Departmental Materials Transportation and Packaging Management*, U.S. Department of Energy, Washington D.C. (http://www.directives.doe.gov/pdfs/doe/doetext/neword/460/o4602a.pdf)
5. DOE-STD-1098-2008, *Radiological Control*, Table 2-2 and Chapter 4, Part 2, Sec. 423, U.S. Department of Energy, Washington D.C. (http://www.hss.energy.gov/healthsafety/wshp/radiation/doe-std-1098.pdf)
6. DOE/CBFO-94-1012, *Quality Assurance Program Document*, U.S. Department of Energy, Carlsbad Field Office, Carlsbad, New Mexico. (http://www.wipp.energy.gov/library/qapd/qapd.pdf)
7. DOE/WIPP 02-3184, *CH Packaging Operations Manual*, U.S. Department of Energy, Carlsbad, New Mexico.
8. DOE/WIPP 2004-3231, 2009, *Title 40 CFR Part 191, Compliance Recertification Application for the Waste Isolation Pilot Plant*, U.S. Department of Energy, Carlsbad, New Mexico. (http://www.wipp.energy.gov/library/CRA/BaselineTool/Index.htm)
9. DOE/WIPP-09-3427, *Waste Data System User's Manual*, U.S. Department of Energy, Carlsbad Field Office, Carlsbad, New Mexico. (http://www.wipp.energy.gov/Documents_NTP.htm)
10. DOE/WIPP-11-3384, *CBFO Approved Filter Vents*, U.S. Department of Energy Carlsbad, New Mexico, Waste Isolation Pilot Plant.
11. DOE/EIS-0026, *Final Environmental Impact Statement for the Waste Isolation Pilot Plant*, U.S. Department of Energy, 1980, Washington D.C.
12. DOE/EIS-0026-FS, *Final Supplemental Environmental Impact Statement for the Waste Isolation Pilot Plant*, U.S. Department of Energy, 1990, Washington D.C.

13. DOE/EIS-0026-S-2, *Waste Isolation Pilot Plant Disposal Phase Final Supplemental Environmental Impact Statement*, U.S. Department of Energy, 1997, Washington D.C. (http://www.wipp.energy.gov/library/seis/summary-1o4.pdf)
14. DOE/WIPP 02-3122, *Transuranic Waste Acceptance Criteria for the Waste Isolation Pilot Plant*, U. S. Department of Energy, Carlsbad Field Office, Waste Isolation Pilot Plant, Carlsbad, New Mexico.
15. DOE/WIPP 02-3183, *CH Packaging Program Guidance*, U.S. Department of Energy, Waste Isolation Pilot Plant, Carlsbad, New Mexico. (http://www.wipp.energy.gov/library/t2omi/t2omi.htm)
16. WIPP National Environmental Policy Act Database, June 19, 2007, Carlsbad, New Mexico, Waste Isolation Pilot Plant, U.S. Department of Energy
17. DOE/WIPP-06-3345, *Waste Isolation Pilot Plant Flammable Gas Analysis*, Carlsbad, New Mexico, Waste Isolation Pilot Plant, U.S. Department of Energy
18. DOE/WIPP 02-3196, *Waste Isolation Pilot Plant Initial Report for PCB Disposal Authorization*, U.S. Department of Energy, Carlsbad, New Mexico, Carlsbad Field Office, U.S. Department of Energy. (http://www.wipp.energy.gov/rcradox/final/02-3196_PCB_Initial_3-19-02_4-29-02.pdf)
19. DOE/WIPP 02-3214, *Remote-Handled TRU Waste Characterization Program Implementation Plan*, U.S. Department of Energy, Carlsbad, New Mexico, Carlsbad Field Office, U.S. Department of Energy. (http://www.wipp.energy.gov/rcradox/DOE-WIPP_02-3214_Rev_3.pdf)
20. DOE/WIPP 02-3283, *RH Packaging Program Guidance*, U.S. Department of Energy, Carlsbad, New Mexico, Waste Isolation Pilot Plant, U.S. Department of Energy.
21. DOE/WIPP 07-3372, *Waste Isolation Pilot Plant Documented Safety Analysis*, U.S. Department of Energy, Carlsbad, New Mexico, Waste Isolation Pilot Plant, U.S. Department of Energy. (http://www.wipp.energy.gov/library/DSA/DOE_WIPP_07_3372_ Rev_3_DSA.pdf)_
22. WP 08-PT.07, *RH-TRU 72-B Cask Removal Lid Canister Handling and Operation Manual*, Carlsbad, New Mexico, Waste Isolation Pilot Plant, U.S. Department of Energy.
23. WP 08-PT.12, *RH-TRU 72-B Cask Welded Lid Canister Handling and Operation Manual*, Carlsbad, New Mexico, Waste Isolation Pilot Plant, U.S. Department of Energy.

Regulatory Basis

24. Public Law 96-164, *93 Sta. 1259. National Security and Military Applications of Nuclear Energy Authorization Act*, 1980, Section 213(a). (http://thomas.loc.gov/cgi-bin/bdquery/z?d096:SN006 73:TOM:/bss/d096query.html)

25. Public Law 102-579, 106 Stat. 4777, 1992 (as amended by Public Law 104-201, 1996), *Waste Isolation Pilot Plant Land Withdrawal Act*. (http:www.wipp.energy.gov/library/CRA/BaselineTool/Documents/Regulatory%20Tools/10%20WIPPLWA1996.pdf)
26. 42 U.S.C. 6901 et seq. *Resource Conservation and Recovery Act (RCRA)* of 1976. (http://www.epa.gov/epawaste/inforesources/online/index.htm)
27. 42 U.S.C. 2011 et seq. *Atomic Energy Act* of 1954. (http://www.nrc.gov/reading-rm/doc-collections/nuregs/staff/sr0980/v1/sr0980v1.pdf)
28. 42 U.S.C 10141. *Nuclear Waste Policy Act* of 1982. (http://epw.senate.gov/nwpa82.82.pdf)
29. EPA-QA/G-4, *Guidance for the Data Quality Objectives Process*, U.S. Environmental Protection Agency. Washington, DC, Quality Assurance Management Staff, U.S. Environmental Protection Agency. (http://www.epa.gov/osw/hazard/correctiveaction/resources/guidance/qa/epaqag4.pdf)
30. U.S. Environmental Protection Agency, Letter and enclosed *Conditions of Approval* from Carl E. Edlund (Director, Multimedia Planning and Permitting Division, EPA) to Edward Ziemianski, Acting Manager, Carlsbad Field Office, DOE), dated January 5, 2011, granting approval for WIPP to dispose of TRU and TRU-mixed wastes containing PCBs. (http://www.wipp.energy.gov/rcradox/final/ EPA_Letter_to_DOE_2011-01-05.pdf)
31. U.S. Environmental Protection Agency, Letter and Enclosures from Frank Marcinowski (Director, Radiation Protection Division) to R. Paul Detwiler (Acting Manager, Carlsbad Field Office), dated March 16, 2004. (http://www.wipp.energy.gov/rcradox/RH-EPAFinal3-26-04.pdf)
32. 69 FR 39456. *Revision to the Record of Decision for the Department of Energy's Waste Isolation Pilot Plant Disposal Phase*. Federal Register 69: 39456-39459, June 30, 2004, Department of Energy, Washington, D.C. (http://www.em.doe.gov/pdfs/92604PCB%20ROD%20Fed%20Reg%20063004%20p39456-9.pdf)
33. 71 FR 70584, *Criteria for the Certification and Recertification of the Waste Isolation Pilot Plant's Compliance with Disposal Regulations: Recertification Decision: EPA Final Rule*. Federal Register 75:70584-70595, November 18, 2010, Radiation Protection Division, Washington, D.C. (http://www.gpo.gov/fdsys/pkg/FR-2010-11-18/pdf/2010-28806.pdf)
34. 10 CFR 71, *Packaging and Transportation of Radioactive Material*, Code of Federal Regulations (CFR), Washington D.C., Office of the Federal Register, National Archives and Records Administration. (http://www.gpoaccess.gov/cfr/index.html)
35. 10 CFR 71, Subpart H, *Quality Assurance*, Code of Federal Regulations (CFR), Washington D.C., Office of the Federal Register, National Archives and Records Administration. (http://www.gpoacess.gov/cfr/index.html)

36. 10 CFR 830, Subpart A, *Nuclear Safety Management*, Code of Federal Regulations (CFR), Washington D.C., Office of the Federal Register, National Archives and Records Administration. (http://www.gpoacess.gov/cfr/index.html)
37. 10 CFR 835, *Occupational Radiation Protection*, Code of Federal Regulations (CFR), Washington D.C., Office of the Federal Register, National Archives and Records Administration. (http://www.gpoacess.gov/cfr/index.html)
38. 40 CFR 191, *Environmental Radiation Protection Standards for Management and Disposal of Spent Nuclear Fuel, High-Level, and Transuranic Radioactive Wastes*. Code of Federal Regulations (CFR), Washington D.C., Office of the Federal Register, National Archives and Records Administration. (http://www.gpoacess.gov/cfr/index.html)
39. 40 CFR 194, *Criteria for the Certification and Re-Certification of the Waste Isolation Pilot Plants Compliance with the 40 CFR § 191 Disposal Regulations*, Code of Federal Regulations (CFR), Washington D.C., Office of the Federal Register, National Archives and Records Administration. (http://www.gpoacess.gov/cfr/index.html)
40. 40 CFR 262, *Standards Applicable to Generators of Hazardous Waste*, Code of Federal Regulations (CFR), Washington D.C., Office of the Federal Register, National Archives and Records Administration. (http://www.gpoacess.gov/cfr/index.html)
41. 49 CFR 172.203, *Additional Description Requirements*, Code of Federal Regulations (CFR), Washington D.C., Office of the Federal Register, National Archives and Records Administration. (http://www.gpoacess.gov/cfr/index.html)
42. 49 CFR § 173.433(g), *Shipping Papers and Labeling*, Code of Federal Regulations (CFR), Washington D.C., Office of the Federal Register, National Archives and Records Administration. (http://www.gpoacess.gov/cfr/index.html)
43. 40 CFR 761 *Polychlorinated Biphenyls (PCBs) Manufacturing, Processing, Distribution in Commerce, and Use Prohibitions*. Code of Federal Regulations, Washington, D.C., Office of the Federal Register, National Archives and Records Administration. (http://www.gpoaccess,gov/cfr/index.html)
44. NM4890139088-TSDF, *Waste Isolation Pilot Plant Hazardous Waste Facility Permit*, New Mexico Environment Department, Santa Fe, New Mexico. (http://www.nmenv.state.nm.us/wipp/pdfpermit.htm)
45. New Mexico Hazardous Waste Act, NMSA 1978, 74-4-1 through 74-4-14 (http://www.nmonesource.com/nmnxtadmin/NMPPublic.aspx)

U. S. Nuclear Regulatory Commission (NRC)

46. U.S. Nuclear Regulatory Commission, *TRUPACT-II Certificate of Compliance*, NRC Docket No 71-9218, Washington, D.C., Office of Regulatory Procedures, U.S. Nuclear Regulatory Commission. (http://www.wipp.energy.gov/Documents_Transportation.htm)

47. U.S. Nuclear Regulatory Commission, *TRUPACT-III Certificate of Compliance*, NRC Docket No. 71-9305, Washington, D.C., Office of Regulatory Procedures, U.S. Nuclear Regulatory Commission (http://www.wipp.energy.gov/Documents_Transportation.htm)
48. U.S. Nuclear Regulatory Commission, *HalfPACT Certificate of Compliance*, NRC Docket No 71-9279, Office of Regulatory Procedures, Washington D.C. (http://www.wipp.energy.gov/Documents_Transportation.htm)
49. U.S. Nuclear Regulatory Commission, *Contact-Handled Transuranic Waste Authorized Methods for Payload Control (CH-TRAMPAC)*, Washington, D.C., Office of Regulatory Procedures, U.S. Nuclear Regulatory Commission.
50. U.S. Nuclear Regulatory Commission, *TRUPACT-III Transuranic Waste Authorized Methods for Payload Control (TRUPACT-III TRAMPAC)*, Washington, D.C., Office of Regulatory Procedures, U.S. Nuclear Regulatory Commission.
51. U.S. Nuclear Regulatory Commission, *Remote-Handled Transuranic Waste Authorized Methods for Payload Control (RH-TRAMPAC)*, Washington D.C., Office of Regulatory Procedures, U.S. Nuclear Regulatory Commission (http://www.wipp.energy.gov/Documents_Transportation.htm)
52. U.S. Nuclear Regulatory Commission, *10-160B Certificate of Compliance*, NRC Docket No. 71-9204, Office of Regulatory Procedures, U.S. Nuclear Regulatory Commission, Washington D.C. (http://www.wipp.energy.gov/Documents_Transportation.htm)
53. U.S. Nuclear Regulatory Commission, *RH-TRU 72-B Certificate of Compliance*, NRC Docket No. 71-9212, Office of Regulatory Procedures, U.S. Nuclear Regulatory Commission, Washington D.C. (http://www.wipp.energy.gov/Documents_Transportation.htm)
54. U.S. Nuclear Regulatory Commission, *Safety Analysis Report for Model 10-160B Type B Radwaste Shipping Cask*, NRC Docket No. 71-9204. Office of Regulatory Procedures, Washington D.C.

Codes and Standards

55. ANSI/AIM BC1-1995, *Uniform Symbology Specification* – Code 39, American National Standards, Inc.
56. NIST, Handbook 44, 1996, *Specifications, Tolerances, and Other Technical Requirements for Weighing and Measuring Devices*, National Institute of Standards and Technology, Office of Weights and Measures, Washington, D.C.

Central Characterization Project Procedures

57. CCP-PO-002, *CCP Transuranic Waste Certification Plan*
58. CCP-PO-003, *CCP Transuranic Authorized Methods for Payload Control (CCP CH-TRAMPAC)*

59. CCP-TP-030, *CCP CH TRU Waste Certification and WWIS/WDS Data Entry*
60. CCP-TP-033, *CCP Shipping of CH TRU Waste*
61. CCP-TP-086, *CCP CH Packaging Payload Assembly*
62. CCP-TP-093, CCP Sampling of TRU Waste Containers
63. CCP-TP-146, *CCP SuperHENC Operating Procedure*

Appendix A –
Radioassay Requirements
for Contact-Handled Transuranic Waste

A-1 Introduction

To support the radiological characterization data required by Waste Isolation Pilot Plant (WIPP), the Advanced Mixed Waste Treatment Project (AMWTP) performs nondestructive assay (NDA) on each payload container to:

- Track the WIPP radionuclide inventory, by isotopic activity and mass, for those radionuclides listed in Section 3.3.1,
- Demonstrate that each payload container disposed of at the WIPP contains transuranic (TRU) waste as specified in Section 3.3.3, and
- Verify that applicable transportation and facility limits on individual payload containers and assemblies for fissile gram equivalent (FGE), PE-Ci, and decay heat are not exceeded, as specified in Sections 3.3.2, 3.3.4, and 3.3.6.

The radioassay process quantifies at least one of the more prevalent radionuclides known to be present in the waste. The remaining listed radionuclides present in the waste in significant quantities will be identified by direct measurement of isotopic ratios as discussed in Section A.2. The isotopic ratios are then used to quantify radionuclides based on the assay value.

The requisite data on isotopic ratios and quantities will be derived from acceptable knowledge (AK) (see Section A.2), radioassay or both using Carlsbad Field Office (CBFO) approved NDA, instruments and procedures. The AMWTP technically justifies that the AK and/or radioassay techniques, instruments, and procedures used:

- Are appropriate for the specific waste stream and waste content code descriptions being assayed, and
- Will result in unbiased values for the cumulative activity and mass of the WIPP radionuclide inventory.

The AMWTP uses four Drum Assay Systems (DASs) to evaluate the NDA techniques to quantify the radionuclides entrained in the TRU waste drums. The DASs are designed to accommodate both 55-gallon and 83/85-gallon drums. The measurement techniques used with the drum assay systems are passive neutron multiplicity counting, active neutron counting using the differential die-away (DDA) technique, gamma-ray isotopic analysis and quantitative gamma-ray energy analysis. The high-resolution gamma-ray measurements provide direct information on the isotopic composition of the plutonium (Pu), uranium (U), americium (Am), and other isotopes in the waste or isotopic ratios. The integrated information from the neutron measurements, gamma-ray measurements, and AK are used to determine the isotopic material composition, quantify the radionuclide masses, and compute the associated derived quantities for each payload container.

AMWTP will not use existing radioassay data collected prior to the implementation of a quality assurance program pursuant to 40 CFR § 194.22 (a) (1) to characterize and certify payload containers for disposal at WIPP.

Proposals for alternative approaches to identification and quantification of radioisotopes (e.g., quantification of isotopic ratio AK on a waste stream basis) must be submitted to CBFO for review and approval. CBFO will report such proposals to Environmental Protection Agency (EPA) for consideration prior to issuing approval.

Controlled changes to radioassay (NDA or radiochemistry) related plans or procedures are managed through a document control process that complies with the Quality Assurance Program Document (QAPD). The Site Project Manager (SPM) and the Site QA Manager review all such changes and report to the CBFO those changes that could impact compliance with the criteria in this document. The SPM ensures that site approved changes to radioassay related plans or procedures affecting either the performance criteria or data quality of certified systems/processes are not used in the collection of waste certification data prior to CBFO's review and approval. Relating testing, calibration, and training performed in accordance with these site-approved changes, however, is not precluded from being conducted prior to CBFO's review and approval. (Memorandum from CBFO to Distribution, CBFO:NTP:RMK:VW:02-2734:UFC:5822, July 29, 2002)

A.2 Radionuclide Isotopic Ratios

Establishing isotopic ratios for use in quantifying radionuclides is performed by direct measurement of each container using the WIPP-certified AMWTP Drum Assay Systems (DASs). Sites may opt to qualify AK as permitted by 40 CFR § 194.22(b) by performing confirmatory testing using WIPP-certified radioassay systems. The AMWTP performs an assay on each container characterized for disposal at WIPP. When direct measurements of isotopic ratios do not yield useable data as a result of technical reasons (e.g., lack of sufficient signal or poor counting statistics), AK is used. All such instances will be documented and appropriately dispositioned.

A.2.1 Methods for Confirmation of Isotopic Ratio AK

As a minimum, to confirm existing AK data, it is necessary to compare the ratio of the two most prevalent radionuclides in the isotopic mix. For weapons and reactor grade plutonium, these are typically ^{239}Pu and ^{240}Pu. For heat source waste, the predominant radionuclides are typically ^{238}Pu and ^{239}Pu. Measured isotopic ratios for ^{241}Am may confirm existing AK by waste stream. However, due to the fluctuation of ^{241}Am in certain waste streams, it may become necessary to measure ^{239}Pu to ^{241}Am isotopic ratios on all containers in that waste stream.

^{241}Am is the daughter of ^{241}Pu, which decays with a half-life of about 14 years. If the time since the chemical separation of the plutonium is known, the quantity of measured ^{241}Am can be used to calculate the quantity of ^{241}Pu. This assumes there was no ^{241}Am in the waste just after the chemical separation and that no ^{241}Am was added to or removed from the waste during the time

since the separation. Since ^{241}Am is an indirect measurement of ^{241}Pu, it could be compared (by ratio) to any plutonium isotope (^{239}Pu or ^{240}Pu) associated with weapons and reactor grade plutonium.

For weapons grade and reactor grade waste, isotopic ratio values for ^{238}Pu can be assumed to be valid in AK data if the values for ^{239}Pu and ^{240}Pu have been confirmed. Because ^{242}Pu cannot be measured using NDA methods, the contribution of ^{242}Pu isotopic ratio is calculated by correlation technique.

For some of the generator sites that were involved primarily in weapons production, the fissile isotopes ^{235}U and ^{233}U and the fissionable isotope ^{238}U may not have been measured when the transuranic waste was originally assayed (i.e., using non-WIPP-certified systems), primarily because the plutonium isotopes were the radionuclides of interest to the generator site. However, other forms of AK may be available. If so, then the AK can be confirmed by data generated on a WIPP-certified system. If valid AK does not exist, then the data generated on a WIPP-certified system can only be used to detect or calculate ^{238}U, ^{235}U, and ^{233}U or to confirm their absence. Because ^{234}U cannot be measured using NDA methods, the isotopic ratios for ^{234}U may be calculated from the ^{235}U enrichment. Values or lack thereof, for ^{137}Cs can be confirmed by the data generated on a WIPP-certified system. This is typically done by measuring ^{137}Cs directly, or by comparing the NDA measured ^{241}Am 662 kiloelectron volt (keV) peak to the other ^{241}Am peaks (e.g., the 125 keV or 721 keV peaks) to determine if the 662 keV peak's intensity is consistent with the expected ^{241}Am intensity.

A disproportionate response for the 662 keV peak relative to the other ^{241}Am peaks may indicate the presence of ^{137}Cs. ^{90}Sr may be calculated from the value for ^{137}Cs and AK. If detected, a waste container's concentration of ^{137}Cs can be used to derive a value of ^{90}Sr, through the application of the appropriate scaling factor(s). All scaling factors used will be technically sound and based on known, documented relationships or correlations. The data report for the waste containers for which the ^{90}Sr, value is derived in this manner shall reflect the use of a scaling factor(s) and provide sufficient documentation to enable its independent calculation. Finally, the gamma spectra must be carefully examined for significant presence of other radionuclides to ensure compliance with transportation requirements. Data obtained for radionuclides other than the WIPP-tracked radionuclides presented above are required to address confounding isotope issues (i.e., masking) with regard to NDA.

The technique used to confirm that the absence or the ratio of non-measurable radionuclides are valid for the radioassay method used to confirm AK are documented in RPT-TRUW-03, Drum Assay Technical Review Report.

A.2.2 Acceptable Knowledge Documentation

The use of AK information concerning the radiological composition of a waste stream will be documented either in the AK summary report for the waste characterization of the waste stream or in another controlled document approved by the Site Project Manager. Should this information be contained in AK package(s) prepared to meet other general waste characterization requirements, it need not be duplicated in other controlled documents that address the radiological properties of the waste stream; however, all relevant information must be included in the AK record. The AMWTP AK process is controlled and documented in accordance with MP-TRUW-8.13. The following discussion is included for the sake of completeness.

A.2.2.1 Required Elements

This section identifies the required radiological information that the AMWTP must maintain for a waste stream. A TRU waste generator site or waste characterization facility may use AK to delineate the distribution of the 10 WIPP-tracked radioisotopes within a TRU waste stream and the presence or absence of isotopes. The type and quantity of supporting documentation may vary by waste stream and shall be compiled in a written record that shall include a summary identifying all sources of information used to delineate the waste stream's isotopic distribution. The basis and rationale for the delineation shall be clearly summarized in an AK report and traceable to referenced documents. Assumptions made in this delineation shall be identified. The following information shall be included as part of the AK written record:

- Map of the site with the areas and facilities involved in TRU mixed waste generation, treatment, and storage identified
- Facility mission description as related to radionuclide-bearing materials and their management, e.g., routine weapons production, fuel research and development and experimental processes
- Description of the specific site locations (such as the area or building) and operations relative to the isotopic composition of the TRU wastes they generated, e.g., plutonium recovery, weapons fabrication, pyrochemical operations and waste incineration
- Waste identification or categorization schemes used at the facility relevant to the waste material's isotopic distribution, e.g., the use of codes that correlate to a specific isotopic distribution, and a description of the isotopic composition of each waste stream
- Information regarding the waste's physical and chemical composition that could affect the isotopic distribution, e.g., processes used to remove ingrown ^{241}Am or alter its expected contribution based solely on radioactive decay kinetics

- Statement of all numerical adjustments applied to derive the material's isotopic distribution, e.g., scaling factors, decay/ingrowths corrections and secular equilibrium considerations
- Specification of the isotopic ratios for the 10 WIPP-tracked radionuclides (^{241}Am, ^{238}Pu, ^{239}Pu, ^{240}Pu, ^{242}Pu, ^{233}U, ^{234}U, ^{238}U, ^{90}Sr, and ^{137}Cs) and, if applicable, the radionuclides that comprise 95% of the radiological hazard on a waste stream, waste stream subpopulation, or container basis.

A.2.2.2 Supplemental Acceptable Knowledge Information

Each generator site or measurement facility shall obtain supplemental AK information, dependent on availability. The amount and type of this information cannot be mandated, but sites shall collect information as appropriate to support their contention regarding the waste's isotopic distribution. This information will be used to compile the waste's AK written record. Supplemental AK documentation that may be used includes, but is not limited to, information from the following sources:

- Safeguards and Security, Materials Control and Accountability, and other nuclear materials control systems or programs and the data they generated.
- Reports of nuclear safety or criticality, or accidents/excursions involving the use of special nuclear material (SNM) or nuclear material.
- Waste packaging, waste disposal, building or nuclear material management area logs or inventory records, and site databases that provide information on SNM or nuclear materials.
- Test plans, research project reports or laboratory notebooks that describe the radionuclide content of materials used in experiments.
- Information from site personnel (e.g., documented interviews).
- Historical analytical data relevant to the isotopic distribution of the waste stream.

A.2.2.3 Discrepancy Resolution

If there is a discrepancy between AK information related to isotopic ratios or composition, the site will evaluate the sources of the discrepancy to determine if the discrepant information is credible. Information that is not credible or information that is limited in its applicability to WIPP characterization will be identified as such and the reasons for dismissing it will be justified in writing in accordance with MP-TRUW-8.13. Limitations concerning the information will be documented in the AK record and summarized in the AK report. In the event that the discrepancy cannot be resolved, the site will perform direct measurements for the impacted population of containers.

If discrepancies result in a change to the original determinations, the AK summary will be updated.

A.3 Data Quality Objectives

The DQOs for WIPP certifiable radiological characterization data are established in Section 3.3 of this Certification Plan. They are summarized below in Table A-1 as they apply to individual payload containers. The AMWTP does not use radiochemistry (RC) or calorimetry methods to characterized TRU waste for disposal at WIPP.

Table A-1. Data Quality Objectives for Radioassay

Requirement	DQO	Confidence[1]
TRU α-activity concentration > 100 nCi/g[2]	A > LLD	N/A
Fissile mass ≤ FGE limit	$FGE + 2\sigma_{TMU}(FGE) \leq$ FGE limit	97.5%
Decay heat ≤ TRAMPAC[3] limit	$DH + 1\sigma_{TMU}(DH) \leq L_{\text{-TRAMPAC}}$	84%

1. Confidence means the statistical level of confidence that the limit is exceeded or not exceeded depending on the requirements of the individual DQOs. The confidence is derived from the specified DQOs, which assume contributions to total measurement uncertainty (TMU) are normally distributed.
2. TRU waste determinations shall be in accordance with the policy for the management of TRU alpha activity concentrations when overpacking waste containers (see Appendix E).
3. TRAMPAC included both the CH-TRAMPAC and the TRUPACT-III TRAMPAC.

There are no stipulated DQOs for PE-Ci or individual isotope activities (except as they impact the requirements listed above). However, at a minimum, radioassay programs must be capable of identifying, measuring, and reporting the presence or absence of:

- The 10 radionuclides identified in Section 3.3.1 for tracking of the WIPP radionuclide inventory (see Section A.2.1),
- ^{235}U, in order to calculate FGE, as required in Section 3.3.2 for compliance with transportation requirements, and
- Other radionuclides whose presence contributes to 95% of the radioactive hazard, as specified in Section 3.3.1, for compliance with transportation requirements.

In support of the above requirements, the Canberra Site Acceptance Test Reports (SATR) for the Integrated Waste Assay Systems, CI-IDA-NDA-0051, CI-IDA-NDA-0052, CI-IDA-NDA-0053, and CI-IDA-NDA-0054 documents and provides technical justification for the following determinations.

Lower Limit of Detection: The lower limit of detection (LLD) for the DAS has been determined. Only DAS measurement modalities that have an LLD of 100 nCi/g or less are used to perform TRU/low-level waste discrimination measurements. Background and container specific interferences are factored into LLD determinations. The LLD is that level of radioactivity which, if present, yields a measured value greater than the critical level with a 95% probability, where the critical level is defined as that value which measurements of the background will exceed with 5% probability. Because the LLD is a measurement-based parameter, it is not feasible to calculate LLDs for radionuclides that are not determined primarily by measurement, e.g., ^{90}Sr. In such cases, the AMWTP has derived and documented the equivalent of an LLD, i.e., a reporting threshold for a radionuclide(s), when it is technically justified. For purposes of reporting radionuclide data in the Waste Data System (WDS)/WIPP Waste Information System (WWIS), this value will be the equivalent of an LLD. References A3 and A4 provide information in developing the LLD.

Total Measurement Uncertainty: The method used to calculate the TMU for the quantities in Table A-1 must be documented and technically justified in the Canberra Industries, Total Measurement Uncertainty for the AMWTP Integrated Waste Assay Systems, CI-IDA-NDA-0055. Compliance with this requirement will be evaluated in reviews of the TMU documentation package for each assay system by CBFO.

Calibration Procedures and Frequencies: Each DAS has been calibrated before initial use. During calibration or re-calibration, system correction factors are established and algorithms adjusted such that the value of percent recovery (%R) is set equal to 100%, i.e., the system is calibrated to 100 %R. The range of applicability of system calibrations is specified in SATR. The matrix/source surrogate waste combination(s) used for calibration are representative of the

- Activity range(s) or gram loading(s), and
- Relevant waste matrix characteristics (e.g., densities, moderator content, and container size) planned for measurement by the system.

Calibration(s) shall be performed in accordance with consensus standards, when such standards exist. If consensus standards are not used, full documentation of the calibration technique is provided to and approved by CBFO prior to performing WIPP related assays. Primary calibration standards shall be obtained from suppliers maintaining a nationally accredited measurement program. When primary standards are not available, the standards are correlated with primary standards obtained from a nationally accredited measurement program.

Calibration Verification: Notwithstanding the need to calibrate individual components for replacement, changes or adjustments (e.g., energy calibration of a detector), verification of the DAS calibration is performed after any one of the following occurs:

- Major system repairs and/or modifications
- Replacement of the measurement system's components, e.g., detector, neutron generator or supporting electronic components that have the capacity to affect data
- Significant changes to the system's software
- Relocation of the system.

Calibration verification shall consist of demonstrating that the system is within the range of acceptable operation. Secondary standards can be used for the calibration verification if their performance has been correlated with the calibration standard. If a verification of the measurement system's calibration or other test demonstrates that the system's response has significantly changed, a re-calibration of the system shall be performed. Calibrated verification tests, along with acceptance criteria are detailed in INST-TRUW-8.1.1, Drum Assay Post-Maintenance Calibration and Verification.

Calibration Confirmation: In order to confirm that the calibration of each DAS was correctly established, the accuracy and precision of each DAS are determined after each calibration or recalibration by performing replicate measurements of a non-interfering matrix. Calibration confirmation replicate measurements are performed on containers of the same nominal size as those in which actual waste is assayed and according to INST-OI-14, Drum Assay Operations, or INST-FOI-01, In-Plant Drum Assay Operations. The number of replicate measurements to be performed is documented and technically justified. The replicate measurements are performed using nationally recognized standards, or certified standards derived from nationally recognized standards that span the range of use. The standards used to calculate accuracy are not the same as those used for the system calibration. Accuracy is reported as percent recovery (%R). The applicable range for accuracy shall not exceed $\pm$ 30% on a non-interfering matrix. Precision is reported as percent relative standard deviation (% RSD). The % RSD shall not exceed the values listed in Table A-2 for the corresponding number of replicate measurements in a non-interfering matrix. Calibration confirmation tests are conducted and documented in accordance with CI-IDA-NDA-0035, Calibration Verification and Confirmation Procedure for the Integrated Waste Assay System (IWAS) at AMWTP and SATR.

Table A-2
Upper Limits for %RSD vs. Number of Replicates

Number of Replicates	2	3	4	5	6	7	8	9	10	11	12	13	14	15
Max %RSD[1]	1.8	6.6	10.0	12.3	14.0	15.2	16.2	17.1	17.7	18.3	18.8	19.3	19.7	20.0

1. The values listed are derived from the measured standard deviation of the replicate measurements using:

$$\frac{s}{\mu} \bullet 100\% < \sqrt{\frac{(0.292) \bullet \chi^2_{0.05,n-1}}{n-1}} \bullet 100\%$$

where s is the measured standard deviation, n is the number of replicates, μ is the true value, $\chi^2_{0.05,n-1}$ is the critical value for the upper 5% tail of a one sided chi-squared distribution with n-1 degrees of freedom, and 0.292 corresponds to a 95% upper confidence bound on the true system precision limit of 29.2%.

Measurement facilities may develop alternate limits for accuracy and precision subject to approval by CBFO prior to certification of waste.

A.4 Quality Control

Section 5.0 of this Certification Plan summarizes the QA requirements relating to waste characterization, certification, and transportation that meet all applicable requirements of the CBFO QAPD. The AMWTP DAS uses calibration and operating procedures that have been written, approved, and controlled. Nonconforming items and processes that do not meet established criteria are identified, controlled and corrected in accordance with MP-Q&SI-5.4, Identification of Nonconforming Conditions, and MP-Q&SI-5.3, Corrective Action.

A.4.1 General Requirements

Radioassay Training: Only appropriately trained and qualified personnel are allowed to perform radioassay and data validation/review. Standardized Training requirements for radioassay personnel are based upon existing industry standardized training requirements (e.g., ASTM C1490, Standard Guide for Selection, Training and Qualification of Nondestructive Assay [NDA] Personnel [Reference A8]) and meet the specifications in the QAPD. Requalification of radioassay personnel shall be based upon evidence of continued satisfactory performance and must be performed at least every two years. Personnel receive training requisite with their activities and level of responsibility in accordance with MP-RTQP-14.4, Personnel Qualification and Certification. The period of effectiveness for qualification and the requalification criteria are also specified.

Software Quality Control (QC) Requirements: All computer programs and revisions thereof used for radioassay meet the applicable requirements in Section 6.0 of the QAPD (Reference A2) and are performed in accordance with MP-CD&M-11.2, Software Quality Assurance.

*Comparison Program*s: The AMWTP participates in any relevant measurement comparison program(s) sponsored or approved by the CBFO. Such programs may be conducted as part of the NDA performance demonstration program (References A7 and A10) or through other third parties (Reference: WIPP Compliance Recertification Application, including Annual Reports to the EPA).

A.4.2 NDA QC Requirements

The assay procedures cited in various American Society for Testing and Materials (ASTM) and American National Standards Institute (ANSI) standards (References A9 and A11 to A15) and NRC standard practices and guidelines (Reference A16) as referenced in this Appendix are recommended for use at all testing facilities.

*Background Measurement*s: Background measurements are performed and recorded at least once per operational day, unless otherwise approved by CBFO. Contributions to background due to radiation from nearby radiation producing equipment, standards or wastes are engineered into the facility and DAS design and controlled in accordance with INST-OI-14 or INST-FOI-01.

Instrument Performance Measurements: Performance checks on the calibrated and operable DAS (both gamma and neutron modalities) are performed and recorded as described in INST-OI-14 or INST-FOI-01. Performance checks shall include daily efficiency checks and checks for spectrometric instruments, peak position and resolution checks, and weekly matrix correction with an interfering matrix.

Both radioactive sources and surrogate waste matrix containers (both non-interfering and interfering) are used. At least once per operational week an interfering matrix must be used to assess the long-term stability of the NDA instrument's matrix correction. Surrogate waste containers must reflect the type of waste, e.g., debris, sludge, currently being assayed. To verify calibration, radioactivity standards must be selected such that, over a six-month period, the operating range of the assay system is tested in each applicable surrogate waste matrix. The use of interfering and non-interfering matrices provides a realistic assessment of the assay system's performance over time, and will assist measurement personnel in detecting potential problems relative to the matrices currently assayed by the measurement system.

Interfering surrogate matrix containers must be constructed in such a way that the waste characteristics do not change over time.

Radioactive sources should be long-lived, easy to position relative to the detector(s), and of sufficient radioactivity to obtain good results with relatively short count times.

Data Checks: Background and performance measurements (standardization, daily performance verification, and weekly check with an interfering matrix drum) are evaluated against established criteria at the time of the measurements to determine acceptability of the DAS. At least once per week, the background and performance measurement results are reviewed and evaluated to

monitor performance trends in accordance with MP-TRUW-8.8, Level I Data Validation. If daily performance checks result in data that are outside the acceptable range, the required responses in Table A-3 shall be followed.

Table A-3
Range of Applicability

Category	Acceptability Range[1,2]	Required Response
Acceptable Range	$\|Data\|^c \leq 2\sigma$	No action required.
Warning Range	$2\sigma < \|Data\| \leq 3\sigma$	The performance check standard shall be rerun no more than two times. If the rerun performance check(s) result in data within +/-2σ, then the additional performance checks shall be documented and work may continue. If the system does not fall within +/- 2σ after two rerun performance checks, then the required response for the Action Range shall be followed.
Action Range	$\|Data\| > 3\sigma$	Work shall stop and the occurrence shall be documented and appropriately dispositioned (e.g., a nonconformance report is initiated). The DAS shall be removed from service pending successful resolution of all necessary actions, and all assays performed since the last acceptable performance check are suspect, pending satisfactory resolution. Recalibration or calibration verification is required prior to returning the system back to service.

1. Reference A15.
2. The standard deviation "σ" is only based on the reproducibility of the data check measurements themselves. This is not TMU.

A.4.3 Radiochemistry QC Requirements

AMWTP does not use RC methods to characterize TRU waste for disposal at WIPP. Assay standards are prepared and used as indicated in the standard test methods.

A.5 Data Management

A.5.1 Data Review and Validation

All radioassay data must be reviewed and approved by qualified personnel prior to being reported. At a minimum, the data must be reviewed by a technical reviewer and approved by the

SPM or their designee. Personnel are qualified as specified in MP-RTQP-14.4. The validation process described in MP-TRUW-8.8 and MP-TRUW-8.9, Level II Data Validation, includes verification that the applicable quality controls specified in Section A.4 have been met.

A.5.2 Data Reporting

Radioassay data are reported to the site project office on a testing batch basis. A batch is defined as a suite of waste containers undergoing radioassay using the same testing equipment. For NDA, the AMWTP specifies the size of the testing batch as needed, without regard to waste matrix.

The AMWTP submits testing batch data reports (either by the Waste Tracking System [WTS] or hard copy) for each testing batch to the site project office, as defined in MP-TRUW-8.8. Radioassay testing batch data reports shall consist of the following:

- Testing facility name, testing batch number, container numbers included in that testing batch, and signature release by the SPM or their designee(s)
- Table of contents
- Background and performance data or control charts for the relevant time period
- Data validation per the QAPD (Reference A2, Section 5.3.2) and as described in MP-TRUW-8.8
- Separate testing report sheet(s) for each container in the testing batch that includes:
  - Title "Radioassay Data Sheet"
  - Method used for radioassay (i.e., procedure identification)
  - Date of radioassay
  - Activities and/or masses of individual radioisotopes present and their associated TMUs (curies and/or grams)
  - Operator signature/date
  - Reviewer signature/date.

Other radiological properties to be documented for each container include:

- Decay heat expressed in watts (W) and its associated TMU
- Total ^{239}Pu fissile gram equivalent (FGE) expressed in grams (g) and its associated TMU

- TRU alpha activity concentration expressed in curies/gram (Ci/g) and its associated TMU
- Total ^{239}Pu equivalent activity expressed in curies (Ci).

These derived radiological properties are stored in WTS.

Radioassay data for each performance check (i.e., daily performance check and weekly interfering matrix performance check) and each container is transferred from the DAS to the WTS.

TMU is reported in terms of one standard deviation on the DAS and the WTS reports.

A.5.3 Data and Records Retention

The following nonpermanent records are maintained at the AMWTP for maintenance, and are documented and retrievable by testing batch number, in accordance with the QAPD:

- Testing batch reports
- All raw data, including instrument readouts, calculation records, and radioassay QC results
- All instrument calibration reports, as applicable.

A.6 Quality Characteristics Assessment

Per 40 CFR § 194.22(c), there are five "quality characteristics" that must be assessed. These quality characteristics and the method by which they are assessed are described in the following sections.

A.6.1 Data Accuracy

Per 40 CFR § 194.22(c)(1), *Data Accuracy* is defined as "the degree to which data agree with an acceptable reference or true value." For the AMWTP NDA methods, this quality characteristic is reported as %R and is met and maintained as described in section A.3. The AMWTP does not use RC methods for characterizing CH-TRU waste. See References A7 and A10 for application of this quality characteristic in formulating the scoring criteria for data generated by the Performance Demonstration Program. Specifically, Section D.1 of these references give the definitions of limits, bounds, and point estimates as they relate to NDA measurement systems and the relationship between accuracy, bias, and %R.

A.6.2 Data Precision

Per 40 CFR § 194.22(c)(2), *Data Precision* is defined as "a measure of the mutual agreement between comparable data gathered or developed under similar conditions expressed in terms of

standard deviation." For AMWTP NDA methods, this quality characteristic is met and maintained as described in Section A.3. The AMWTP does not use RC methods for characterizing CH-TRU waste.

A.6.3 Data Representativeness

Per 40 CFR § 194.22(c)(3), *Data Representativeness* is defined as "the degree to which data can accurately and precisely represent a characteristic of a population, a parameter, variations at a sampling point, or environmental conditions." For NDA and RC methods, this quality characteristic for the waste stream is met and maintained through 100% measurement confirmation on a payload container basis. For NDA, since the entire waste container is subjected to measurement, representativeness pertaining to the actual measurement is not applicable. The AMWTP does not use RC methods for characterizing CH-TRU waste.

A.6.4 Data Completeness

Per 40 CFR § 194.22(c)(4), *Data Completeness* is defined as "a measure of the amount of valid data obtained compared to the amount that was expected." For NDA methods, this quality characteristic is met and maintained by requiring 100% valid results. For the AMWTP NDA program, any results indicating the NDA measurement was invalid require re-measurement. The AMWTP does not use RC methods for characterizing CH-TRU waste.

A.6.5 Data Comparability

Per 40 CFR § 194.22(c)(5), *Data Comparability* is defined as "a measure of confidence with which one data set can be compared to another." For NDA methods, this quality characteristic is addressed by ensuring that all data are produced under the same system of controls. These controls apply to all aspects of the data generation process, including: procurement of analytical instruments; calibration and operation of assay equipment according to industry standards; preparation and use of standardized instrument and data review procedures; and, training of equipment operators and technical/data review personnel to the QAPD, as specified in Section A.4.1. All NDA, and RC systems and methods are approved by CBFO prior to use in generating waste characterization data. Additionally, comparison of measured data with AK derived or based values, as applicable, provides a means to assess comparability on a waste stream basis. Although no specific confidence level is specified, these controls provide comparability among all data generated under this program. Sites using radioassay systems shall participate in measurement comparison programs as specified in Section A.4.1.

References

NOTE: *The current revisions of the referenced documents are applicable. The Internet links are provided for information purposes only and may change without prior notification.*

A1. *U.S. Nuclear Regulatory Commission.* Peer Review for High-Level Nuclear Waste Repositories, NUREG-1297, *Washington D.C., Office of Nuclear Material Safety and* Safeguards, *U.S. Nuclear Regulatory Commission*

A2. U.S. Department of Energy. *Quality Assurance Program Document*. DOE/CBFO-94-1012. Carlsbad, New Mexico, Carlsbad Field Office, U.S. Department of Energy. http://www.wipp.energy.gov/library/qapd/qapd.pdf

A3. Currie, Lloyd A., 1968. *Limits for Qualitative Detection and Quantitative Determination. Anal.Chem.* 40: 586-93

A4. EPA, 1980. *Upgrading Environmental Radiation Data.* EPA 520/1-80-012, Washington D.C., Office of Radiation Programs, U. S. Environmental Protection Agency

A5. K. C. Smith, R. A. Stroud, K. L. Coop, and J. F. Bresson. 1998. *Total Measurement Uncertainty Assessment for Transuranic Waste Shipments to the Waste Isolation Pilot Plant*. Proceedings of the 6th Nondestructive Assay Waste Characterization Conference, Salt Lake City, Utah, Nov. 17-19, 1998, pp.21-37

A6. K. L. Coop, J. F. Bresson, M. E. Doherty, B. M. Gillespie, and D. R. Davidson. *Standardized Total Measurement Uncertainty Reporting for WIPP*. Nondestructive Assay Interface Working Group, Salt Lake City, Utah, May 22, 2000

A7. U.S. Department of Energy. *Performance Demonstration Program Plan for Nondestructive Assay of Boxed Wastes for the TRU Waste Characterization Program*. DOE/CBFO-01-1006. Carlsbad, New Mexico, Carlsbad Field Office, U.S. Department of Energy http://www.wipp.energy.gov/Documents_NTP.htm

A8. American Society for Testing and Materials. *Standard Guide for Selection, Training and Qualification of Nondestructive Assay (NDA) Personne*l, ASTM C1490, Annual Book of ASTM Standards, Philadelphia, Pennsylvania, American Society for Testing and Materials

A9. American National Standards Institute. *Radiometric Calorimeters – Measurement Control Program*, ANSI N15.54, American National Standards Institute, Inc., 1430 Broadway, New York, NY 10018

A10. U.S. Department of Energy. *Performance Demonstration Program Plan for Nondestructive Assay of Drummed Wastes for the TRU Waste Characterization Program.* DOE/CBFO-01-1005. Carlsbad, New Mexico, Carlsbad Field Office, U.S. Department of Energy.(http://www.wipp.energy.gov/documents_NTP.htm)

A11. American Society for Testing and Materials. *Standard Test Method for Determination of Plutonium Isotopic Composition by Gamma-Ray Spectrometry*. ASTM C1030, Annual Book of ASTM Standards, Philadelphia, Pennsylvania, American Society for Testing and Materials

A12. American Society for Testing and Materials. *Standard Test Method for Nondestructive Assay of Nuclear Material in Scrap and Waste by Passive-Active Neutron Counting Using a ^{252}Cf Shuffler.* ASTM C1316, Philadelphia, Pennsylvania, American Society for Testing and Materials

A13. American Society for Testing and Materials. *Standard Test Method for Nondestructive Assay of Special Nuclear Material in Low Density Scrap and Waste by Segmented Passive Gamma-Ray Scanning.* ASTM C1133, Annual Book of ASTM Standards, Philadelphia, Pennsylvania, American Society for Testing and Materials

A14. American Society for Testing and Materials. *Standard Test Method for Nondestructive Assay of Plutonium, Tritium and ^{241}Am by Calorimetric Assay*. ASTM C1458, Annual Book of ASTM Standards, Philadelphia, Pennsylvania, American Society for Testing and Materials

A15. American National Standards Institute. *Nondestructive Assay Measurement Control and Assurance*, ANSI N15.36. American National Standards Institute, Inc., 1430 Broadway, New York, NY 10018

A16. U.S. Nuclear Regulatory Commission. 1984. *Nondestructive Assay of Special* Nuclear *Material Contained in Scrap and Waste.* Regulatory Guide 5.11, Washington, D.C., Office of Nuclear Regulatory Research, U.S. Nuclear Regulatory Commission

A17. American National Standards Institute. *Plutonium-Bearing Solids Calibration Techniques for Calorimetric Assay.* ANSI N15.22-1987, American National Standards Institute, Inc., 1430 Broadway, New York, NY 10018

A18. Canberra Industries, *Genie 2000 Spectroscopy System Operation*

A19. Canberra Industries, *Genie 2000 Spectroscopy System Customization Tools*

A20. Canberra Industries, *NDA 2000 Technical Reference Manual*

A21 Canberra Industries, *NDA 2000 Users Manual*

A22. Canberra Industries, *Total Measurement Uncertainty for the AMWTP Integrated Waste Assay Systems*, CI-IDA-NDA-0055

A23. Canberra Industries, *Neutron Multiplicity Counter Characterization Report for the Integrated Waste Assay System*, Unit 1, 34000

A24. Canberra Industries, *Neutron Multiplicity Counter Characterization Report for the Integrated Waste Assay System*, Unit 2, 34001

A25. Canberra Industries, *Neutron Multiplicity Counter Characterization Report for the Integrated Waste Assay System*, Unit 3, 34034

A26. Canberra Industries, *Neutron Multiplicity Counter Characterization Report for the Integrated Waste Assay System*, Unit 4, 34035

A27. Canberra Industries, *Differential Die-Away Analysis Characterization Report for the Integrated Waste Assay System*, Unit 1, 34002

A28. Canberra Industries, *Differential Die-Away Analysis Characterization Report for the Integrated Waste Assay System*, Unit 2, 34003

A29. Canberra Industries, *Differential Die-Away Analysis Characterization Report for the Integrated Waste Assay System*, Unit 3, 34036

A30. Canberra Industries, *Differential Die-Away Analysis Characterization Report for the Integrated Waste Assay System,* Unit 4, 34037
A31. Canberra Industries, *Q2 Calibration Report for the Integrated Waste Assay System,* Unit 1, 34004
A32. Canberra Industries, *Q2 Calibration Report for the Integrated Waste Assay System,* Unit 2, 34005
A33. Canberra Industries, *Q2 Calibration Report for the Integrated Waste Assay System,* Unit 3, 34038
A34. Canberra Industries, *Q2 Calibration Report for the Integrated Waste Assay System,* Unit 4, 34039
A35. Canberra Industries, *Site Acceptance Test Reports (SATR) for the Integrated Waste Assay Systems* Unit 1 at AMWTP, CI-IDA-NDA-0051
A36. Canberra Industries, *Site Acceptance Test Reports (SATR) for the Integrated Waste Assay Systems* Unit 2 at AMWTP, CI-IDA-NDA-0052
A37 Canberra Industries, *Site Acceptance Test Reports (SATR) for the Integrated Waste Assay Systems* Unit 3 at AMWTP, CI-IDA-NDA-0053
A38. Canberra Industries, *Site Acceptance Test Reports (SATR) for the Integrated Waste Assay Systems* Unit 4 at AMWTP, CI-IDA-NDA-0054
A39. Canberra Industries, *Calibration Verification & Confirmation Procedure for Integrated Waste Assay (IWAS) at AMWTP,* CI-IDA-NDA-0035
A40. *Drum Assay Technical Review Report,* RPT-TRUW-03
A41. *Drum Assay Post-Maintenance Calibration and Verification,* INST-TRUW-8.1.1
A42 *Surveillances,* MP-M&IA-17.3

Appendix B – ^{239}Pu Equivalent Activity

The concept of ^{239}Pu equivalent activity (PE-Ci) is intended to eliminate the dependency of radiological analyses on specific knowledge of the radionuclide composition of a transuranic (TRU) waste stream. A unique radionuclide composition and/or distribution are associated with most TRU waste streams at each site. By normalizing all radionuclides to a common radiotoxic hazard index, radiological analyses that are essentially independent of these variations can be conducted for the Waste Isolation Pilot Plant (WIPP) facility. ^{239}Pu, as a common component of most defense TRU wastes, was selected as the radionuclide to which the radiotoxic hazard of other TRU radionuclides could be indexed.

Modeled operational releases from the WIPP facility, including both routine and accident-related, are airborne. There are no known significant liquid release pathways during the operational phase of the facility. This, and the fact that TRU radionuclides primarily represent inhalation hazards, allows a valid relationship to be established, which normalizes the inhalation hazard of a TRU radionuclide to that of ^{239}Pu for the purpose of the WIPP radiological analyses. In effect, the radiological dose consequences of an airborne release of a quantity of TRU radioactivity with a known radionuclide distribution will be essentially identical to that of a release of that material expressed in terms of a quantity of ^{239}Pu. To obtain this correlation, the 50-year effective whole-body dose commitment or dose conversion factor for a unit intake of each radionuclide will be used.

For a known radioactivity quantity and radionuclide distribution, the ^{239}Pu equivalent activity is determined using radionuclide-specific weighting factors. The ^{239}Pu equivalent activity (AM) can be characterized by:

$$AM = \sum_{i=1}^{K} A_i / WF_i$$

where K is the number of TRU[3] radionuclides, A_i is the activity of radionuclide i, and WF_i is the PE-Ci weighting factor for radionuclide i.
WF_i is further defined as the ratio
$WF_i = E_o / E_i$
where E_o (rem/ μCi) is the 50-year effective whole-body dose commitment due to the inhalation of ^{239}Pu particulates with a 1.0 μm activity median aerodynamic diameter (AMAD) and a weekly pulmonary clearance class, and E_i (rem/ μCi) is the 50-year effective whole-body dose commitment due to the inhalation of radionuclide (i) particulates with a 1.0 μm activity median aerodynamic diameter and the pulmonary clearance class resulting in the highest 50-year effective whole-body dose commitment.

3. TRU as designated in this equation refers to any radionuclide with an atomic number greater than 92 and including ^{233}U.

Weighting factors calculated in this manner are presented in Table B-1 for radionuclides typically present in contact-handled transuranic (CH-TRU) waste. If other TRU radionuclides are determined to be present in the payload container, their weighting factors can be obtained from the values of E_o and E_i contained in DOE/EH-0071 (Reference B1).

Table B-1
PE-Ci Weighting Factors for Selected Radionuclides

Radionuclide	Pulmonary Clearance Class[1]	Weighting Factor
^{233}U	Y	3.9
^{237}Np	W	1.0
^{236}Pu	W	3.2
^{238}Pu	W	1.1
^{239}Pu	W	1.0
^{240}Pu	W	1.0
^{241}Pu	W	51.0
^{242}Pu	W	1.1
^{241}Am	W	1.0
^{243}Am	W	1.0
^{242}Cm	W	30.0
^{244}Cm	W	1.9
^{252}Cf	Y	3.9

1. (W) Weekly, (Y) Yearly

References

B1. U.S. Department of Energy. *Internal Dose Conversion Factors for Calculation of DOSE to the Public.* DOE/EH-0071, July 1988.

Appendix C –
Glossary

10-160B Packaging - A Nuclear Regulatory Commission (NRC)-certified Type B transportation packaging used for transportation of remote-handled transuranic (RH-TRU) wastes.

Acceptable knowledge (AK) - Any information about the process used to generate waste, material inputs to the process, and the time period during which the waste was generated, as well as data resulting from the analysis of waste, conducted prior to or separate from the waste certification process authorized by Environmental Protection Agency's (EPA's) Certification Decision, to show compliance with Condition 3 of the certification decision (Appendix A of 40 CFR 194.2 and 194.67).

Activity - A measure of the rate at which a material emits nuclear radiation, usually given in terms of the number of nuclear disintegrations occurring in a given length of time. The common unit of activity is the curie, which amounts to 37 billion (3.7×10^{10}) disintegrations per second. The International Standard unit of activity is the Becquerel and is equal to one disintegration per second.

Administrative controls - Provisions relating to organization and management, procedures, record keeping, assessment, and reporting necessary to ensure the safe operation of the facility.

Atomic energy defense activities - Activities of the Secretary of Energy (and predecessor agencies) performed in whole or in part in carrying out any of the following functions: naval reactors development; weapons activities, including defense inertial confinement fusion; verification and control technology; defense nuclear material production; defense nuclear waste and materials by-product management; defense nuclear materials security investigations; and defense research and development.

Authorization basis - Those aspects of the facility design and operational requirements relied upon by the Department of Energy (DOE) to authorize the operation of nuclear facilities and processes.

Characterization - Sampling, monitoring, and analysis—whether by review of AK, nondestructive examination, nondestructive assay (NDA), radiochemistry (RC), to identify and quantify the constituents of a waste material.

Chemical compatibility - Assessing the properties of chemicals in a payload container (>1 weight percent); there must be no adverse safety or health hazards produced as a result of any mixtures that occur.

Completeness - The percentage of measurements made that are judged to be valid measurements. The completeness goal is to generate a sufficient amount of valid data based on program needs. Valid results for radioassay, and radiography data are those that were obtained when the laboratory or testing facility demonstrated that the instrumentation and method were in control; that is, that all calibration, verification, interference, and zero matrix checks met acceptance criteria.

Compressed gas - Compressed gases are those materials defined as such by 49 CFR § 173, Subpart G.

Contact-handled transuranic waste - Transuranic waste with a surface dose rate not greater than 200 millirem/per hour.

Contact-handled Transuranic Waste Authorized Methods for Payload Control (CH-TRAMPAC) - The governing document for shipments in the Transuranic Package Transporter-II (TRUPACT-II) and HalfPACT packagings.

Content code - A uniform system applied to waste forms to group those with similar characteristics for purposes of shipment in the TRUPACT-II, TRUPACT-III, HalfPACT, and RH-TRU 72-B packagings.

Corrosive/Corrosivity - A solid waste exhibits corrosivity if a sample of the waste is either aqueous and has a pH ≤ 2 or ≥ 12.5, or it is a liquid and corrodes steel at a rate >6.35 mm (0.250 inch) per year at a test temperature of 55ºC (130ºF). (40 CFR § 261.22)

Curie - A unit of activity equal to 37 billion (3.7×10^{10}) disintegrations per second.

Disposal - Permanent isolation of TRU waste from the accessible environment with no intent of recovery, whether or not such isolation permits the recovery of such waste (Reference 25, Section 2 [5]).

Dose conversion factor - A numerical factor used in converting radionuclide uptake (curies) in the body to the resultant radiation dose (rem).

Dose equivalent rate - The radiation dose equivalent delivered per unit time (e.g., rem per hour).

Drum - Includes 55-gallon, 85-gallon, and 100-gallon drums as described in the CH-TRAMPAC and Waste Isolation Pilot Plant (WIPP) Hazardous Waste Facility Permit (HWFP).

Fissile gram equivalent - An isotopic mass of radionuclide normalized to ^{239}Pu.

Fissile material - Any material consisting of or containing one or more radionuclides that can undergo neutron-induced fission with neutrons of essentially zero kinetic energy (e.g., thermal neutrons) such as ^{233}U, ^{235}U, and ^{239}Pu.

HalfPACT - An NRC-certified Type B transportation packaging used for transportation of CH-TRU wastes.

Hazardous waste - Those wastes that are designated hazardous by EPA (or state) regulations. For a detailed description, see 40 CFR § 261.3. Hazardous wastes are listed in 20.4.1 New Mexico Administrative Code (NMAC), Subpart II (40 CFR § 261) and/or exhibit one of the four characteristics in 20.4.1 NMAC, Subpart II (40 CFR § 261) (i.e., ignitability, corrosivity, reactivity, and toxicity).

Headspace - The total contained volume of a container minus the volume occupied by the waste material.

Headspace gas - The gas within the headspace of a container.

Internal container – A container inside the outermost container examined during real-time radiography (RTR) or visual examination (VE). Drum liners, liner bags, plastic bags used for contamination control, capillary-type lab ware, and debris not designed to hold liquid at the time of original waste packaging are not internal containers (Reference 44, Part 1, Section 1.5.17).

Lower Limit of Detection - The level of radioactivity, which, if present, will yield a measured value greater than the critical limit with a 95% probability. The critical limit is defined as that value which measurements of the background will exceed with a 5% probability.

Machine-compacted waste - Waste whose volume has been reduced using a mechanical process.

Observable liquid – Liquid that is observable using RTR or VE as specified in Permit Attachment C, Waste Analysis Plan (Reference 44, Part 1, Section 1.5.18).

Overpack - A container put around another container (Reference 8, Glossary of Terms).

Package - (1) A packaging plus its contents. (2) The reusable Type B shipping container (i.e., TRUPACT-II, HalfPACT, RH-TRU 72-B, or 10-160B) loaded with TRU waste payload containers, which has been prepared for shipment in accordance with the package Quality Assurance (QA) program. (3) In the regulations governing the transportation of radioactive materials, the packaging, together with its radioactive contents, as presented for transport.

Packaging - The reusable Type B shipping container for transport of TRU waste payload containers (i.e., TRUPACT-II, TRUPACT-III, HalfPACT, RH-TRU 72-B, or 10-160B).

Packaging quality assurance program - A site-specific document that defines the quality assurance and quality control activities applicable to usage of the NRC-approved packaging. This program shall meet the requirements of 10 CFR § 71, Subpart H.

Payload container - The outermost container (e.g., a drum, shielded container, SLB2, standard waste box (SWB), ten-drum overpack (TDOP), or canister) for TRU waste material that is placed in a reusable Type B shipping container (e.g., a TRUPACT-II, TRUPACT-III, HalfPACT, RH-TRU 72-B, or 10-160B) for transport.

Payload assembly - An assembly of payload containers qualified for transport in a TRUPACT-II, HalfPACT, or 10-160B.

Pipe overpack - A packaging configuration consisting of a vented cylindrical pipe component surrounded by dunnage within a vented 55-gallon drum with a rigid polyethylene liner and vented lid.

^{239}Plutonium equivalent activity - An equivalent radiotoxic hazard of a radionuclide normalized to ^{239}Pu.

Precision - A measure of mutual agreement among individual measurements of the same property made under prescribed similar conditions; often expressed as a standard deviation or relative percent difference.

Pyrophoric - Materials that may ignite spontaneously in air or that emit sparks when scratched or struck, especially with materials such as steel. A flammable solid that, under transport conditions, might cause fires through friction or retained heat or that can be ignited readily and, when ignited, burns vigorously and persistently so as to create a serious transportation hazard. Included in the pyrophoric definition are spontaneously combustible materials, water reactive materials, and oxidizers. Examples of nonradioactive pyrophorics are organic peroxides, sodium metal, and chlorates.

Radioassay - Methods used to identify and quantify radionuclides in TRU waste. Radioassay includes NDA and RC.

Radiography - A nondestructive testing method that uses x-rays to inspect and determine the physical form of waste.

Radionuclide - A nuclide that emits radiation by spontaneous transformation.

Remote-handled transuranic waste - Transuranic waste with a surface dose rate of 200 millirem per hour or greater.

Remote-handled Transuranic Waste Authorized Methods for Payload Control (RH-TRAMPAC) - The governing document for shipments in the RH-TRU 72-B packaging.

RH-TRU Waste Canister - Container that is transported in the RH-TRU 72B cask.

RH-TRU 72B Packaging - An NRC-certified Type B transportation packaging used for transportation of RH TRU shipments.

Shielded Container - A metal payload container authorized for use within the HalfPACT packaging, that has been tested by DOE to meet Department of Transportation (DOT) Specification 7A Type A requirements. It is approximately the same size as a standard 55-gallon drum, contains one vented 30-gallon steel drum, and incorporates a nominal 1 inch layer of lead lining to shield waste forms with high gamma energies. Although the shielded container is managed during shipment, storage, and disposal as CH waste, it is inventoried in the WIPP Waste Information System (WWIS) as RH waste.

Shipper - A TRU waste site that releases NRC-approved packaging to a carrier for shipment.

Shipping category - A shipping category is defined by the following parameters: chemical composition of the waste (waste type), gas generation potential of the waste material type (quantified by the g-value for hydrogen), and gas release resistance (type of payload container and type and maximum number of confinement layers used).

Sites - Department of Energy TRU waste generator/storage sites.

Standard large box 2 – A specialized metal payload container with a top-loading and a bottom-loading option for use within the TRUPACT-III packaging that has been tested by DOE to meet DOT Specification 7A Type A requirements.

Standard waste box - A metal payload container authorized for use within the TRUPACT-II or HalfPACT packaging, that has been tested by DOE to meet DOT Specification 7A Type A requirements.

Summary category group - Used to segregate TRU mixed wastes into broad groups having similar physical forms. The summary category groups include homogeneous solids (S3000) that are at least 50% by volume solid process residues, soil/gravel (S4000) that is at least 50% by volume soil/gravel, and debris (S5000) that is at least 50% by volume materials that meet the criteria specified in 20.4.1.800 New Mexico Administrative Code (incorporating 40 CFR 268.2[g]). Categorization is based on the Summary Category Group constituting the greater volume of waste (Reference 44, Attachment C).

Ten-drum overpack - A metal payload container authorized for use within the TRUPACT-II packaging, that has been tested by DOE to meet DOT Specification 7A, Type A, requirements.

Test category - Payload containers that do not meet the analytical category decay heat limits or whose concentration of flammable volatile organic compounds (VOCs) in the headspace exceeds 500 ppm are classified as test category (Reference 49, Section 5.2.2).

Trace chemicals/materials - Chemicals/materials that occur individually in the waste in quantities less than 1 weight percent. The total quantity of trace chemicals/materials not listed as allowed materials for a given waste material type in any payload container is restricted to less than 5 weight percent (Reference 49, Section 4.3.1; Reference 51, Section 4.3.1).

TRU isotope - An isotope of any element having an atomic number greater than uranium (i.e., 92).

TRU waste - Waste containing more than 100 nCi of alpha-emitting isotopes per gram of waste, with half-lives greater than 20 years, except for:

1. High-level radioactive waste
2. Waste that the Secretary of Energy has determined, with the concurrence of the administrator of the EPA, does not need the degree of isolation required by the disposal regulations, or
3. Waste that the NRC has approved for disposal on a case-by-case basis in accordance with 10 CFR 61 (Reference 25, Section 2[18]).

TRU-mixed waste - TRU waste that is also a hazardous waste as defined by the Hazardous Waste Act and 20.4.1.200 NMAC (incorporating 40 CFR § 261.3) (Reference 44, Part 1, Section 1.5.7).

TRUPACT-II - An NRC-certified Type B transportation packaging used for transportation of CH-TRU wastes.

TRUPACT-III – An NRC-certified Type B transportation packaging used for transportation of CH-TRU wastes in the SLB2 container.

TRUPACT-III Transuranic Waste Authorized Methods for Payload Control (TRUPACT-III TRAMPAC) – The governing document for shipments in the TRUPACT-III packaging (Reference 49, Section 1).

Verification - The act of authenticating or formally asserting the truth that a process, item, data set, or service is, in fact, that which is claimed. Data verification is the process used to confirm that all review and validation procedures have been completed.

Waste acceptance criteria - Constraints (limits) on the physical, chemical, and radiological properties of TRU waste and its packaging as determined by WIPP's authorization basis requirements. TRU waste will not be approved for shipment to and disposal at the WIPP until it has been certified as meeting these criteria. Waste acceptance criteria ensure that TRU waste is managed and disposed of in a manner that protects human health and safety and the environment.

Waste analysis plan - The waste analysis plan includes test methods, details of planned waste analysis for complying with the general waste analysis requirements of 20.4.1.500 NMAC (incorporating 40 CFR 264.13), a description of the waste shipment screening and verification process, and a description of the QA/Quality Control (QC) program. Sites are required to implement the applicable requirements of the WIPP WAP (HWFP, Attachment C).

Waste characterization - The process of determining that TRU waste meets the requirements of the Waste Acceptance Criteria (WAC) by the acceptable performance of the activities defined by CBFO-approved site-specific plans.

Waste certification - Formal and documented declaration by sites that waste has been characterized and meets the requirements of the WIPP WAC.

Waste matrix code - A DOE-developed coding system for grouping waste streams that have similar matrix constituents, especially for treatment objectives. This coding system allows waste streams within the DOE TRU waste system that has similar physical and chemical waste for properties to be categorized together (Transuranic Waste Baseline Inventory Report, DOE/CAO-95-1121).

Waste stream - A waste stream is waste materials that have common physical form, that contain similar hazardous constituents and that are generated from a single process or from an activity. (Reference 44, Attachment C).

WIPP Waste Information System - A computerized data management system used by WIPP to gather, store, and process information pertaining to CH- and RH-TRU waste destined for or disposed of at WIPP. The WWIS database is a subsystem of the Waste Data System.

Appendix D –
Payload Container Integrity Checklist

The operator is to visually examine 100% of the payload container exterior to determine if the payload container meets the criteria of Section 3.2.1. At a minimum, sites shall incorporate the questions and criteria contained in the following checklist into applicable site procedures. This payload container inspection shall be performed and documented as a part of the loading process. Any YES answer on the inspection checklist will result in the operator discontinuing the inspection, marking the payload container as unacceptable for shipment, and removal of the payload container from the shippable inventory. Before the rejected container can be shipped, it must undergo appropriate corrective actions (e.g., evaluation, repackaging, overpacking, etc.), as applicable. All containers must have an acceptable and complete inspection checklist documenting that it meets the Department of Transportation (DOT) 7A criteria.

Container Examination	Discussion of Criteria	Compliance	
		YES	NO
1. Is the payload container obviously degraded?	Obviously degraded means clearly visible and potentially significant defects in the payload container or payload container surface.		
2. Is there evidence that the payload container is, or has been, pressurized?	Pressurization can be indicated by a fairly uniform expansion of the sidewalls, bottom or top. Past pressurization can be indicated by a notable outward deflection of the bottom or top. Verify that the payload container is not warped.		
3. Is there any potentially significant rust or corrosion such that wall thinning, pin holes, or breaches are likely or the load bearing capacity is suspect?	Rust shall be assessed in terms of its type, extent, and location. Pitting, pocking, flaking, or dark coloration characterizes potentially significant rust or corrosion. This includes the extent of the payload container surface area covered, thickness, and, if it occurs in large flakes or built-up (caked) areas. Rusted payload containers may not be accepted if: • Rust is present in caked layers or deposits • Rust is present in the form of deep metal flaking, or built-up areas of corrosion products. In addition, the location of rust should be noted; for example on a drum: top lid; filter region; locking chine; top one-third, above the second rolling hoop; middle one-third, between the first and second rolling hoops; bottom one-third, below the second rolling hoop; and on the bottom. Payload containers may still be considered acceptable if the signs of rust show up as: • Some discoloration on the payload container • If rubbed would produce fine grit or dust or minor flaking (such that wall thinning does not occur).		

Container Examination	Discussion of Criteria	Compliance	
		YES	NO
4. Are any of the following apparent? • wall thinning • pin holes • breaches	Wall thinning, pin holes and breaches can be a result of rust/corrosion (see discussion on #3).		
5. Are there any split seams, tears, obvious holes, punctures (of any size), creases, broken welds, or cracks?	Payload containers with obvious leaks, holes or openings, cracks, deep crevices, creases, tears, broken welds, sharp edges or pits, are either breached or on the verge of being breached. Verify that there is no warpage that could cause the container to be unstable or prevent it from fitting properly in the applicable package.		
6. Is the load-bearing capacity suspect?	The load-bearing capacity could be reduced for excessive rust (see discussion for #3), wall thinning (see discussion for #4), breaches, cracks, creases, broken welds, etc. (see discussion for #5).		
7. Is the payload container improperly closed?	Inspect the fastener and fastener ring (chine) if applicable for damage or excessive corrosion. Check the alignment of the fastener to ensure that it is in firm contact around the entire lid and the payload container will not open during transportation.		
8. Are there any dents, scrapes, or scratches that make the payload container's structural integrity questionable or prevent the top and bottom surfaces from being parallel?	Deep gouges, scratches, or abrasions over wide areas are not acceptable. If top and bottom surfaces are not parallel, this would indicate that the container is warped. Dents should be less than ¼ inch deep by 3 inches long and between ½ inch to 6 inches wide. All other dents must be examined to determine impact of structural integrity.		

Container Examination	Discussion of Criteria	Compliance	
		YES	NO
9. Is there discoloration which would indicate leakage or other evidence of leakage of material from the payload container?	Examine the payload container regions near the filter vents, top lid fittings, bottom fittings, welds, seams and intersections of one or more metal sheets or plates. Payload containers must be rejected if evidence of leakage is present.		
10. Is the payload container bulged?	For the purposes of this examination, bulging is indicated by: • A fairly uniform expansion of the sidewalls, bottom, or top (e.g., in the case of a drum, either the top or bottom surface protrudes beyond the planar surface of the top or bottom ring, • A protrusion of the side wall (e.g., in the case of a drum, beyond a line connecting the peaks of the surrounding rolling hoops or a line between a surrounding rolling hoop and the bottom or top ring), or • Expansion of the sidewall (e.g., in the case of a drum, such that it deforms any portion of a rolling hoop).		

References

D1. INEEL Engineering Design File, *Waste Container Integrity Evaluation for Storage*, EDF-RWMC-705, September 25, 1996, Idaho National Engineering and Environmental Laboratory, Idaho Falls, ID.

D2. Title 49 CFR § 173, Subpart 475, *Quality Control Requirements Prior to Each Shipment of Class 7 (Radioactive) Materials*, Code of Federal Regulations, Washington, D.C., Office of the Federal Register, National Archives and Records Administration. (http://www.ecfr.gov)

D3. DOE/RL-96-57, Section 2.5.5, *Test & Evaluation Document for the U.S. Department of Transportation Specification 7A Type A Packaging* (formerly WHC-EP-0558). (http://rampac.energy.gov/certinfo/special/noncertified/dot7a/pdot7a.aspx)

Appendix E –
Payload Management of TRU Alpha Activity Concentration

E.1 Scope

The policies and methods for the management of transuranic (TRU) alpha activity concentration within each TRU waste payload container disposed of at WIPP are set out below. They are based on the definition of TRU waste in the Waste Isolation Pilot Plant (WIPP) Land Withdrawal Act (LWA), Public Law 102-579. The WIPP LWA defines TRU waste as:
"…waste containing more than 100 nanocuries of alpha emitting transuranic isotopes per gram of waste, with half lives greater than 20 years…" (Section 2[18]).
This appendix pertains specifically to the payload management of TRU alpha activity concentration of waste containers selected for overpacking.

E.2 Policies

The National TRU Waste Program has established the following policies for managing TRU alpha activity concentration in compliance with the WIPP LWA: (References E1, E2, and E3):

- The TRU alpha activity concentration limit for TRU waste (>100 nCi/g) applies to the TRU waste stream as a whole.

- Waste containers belonging to a TRU waste stream may vary in their TRU alpha activity concentration, some containing >100 nCi/g and some containing ≤ 100 nCi/g. Using process knowledge in combination with radioassay measurements to determine the presence of transuranic isotopes within the waste stream, generator sites define a TRU waste stream based on its potential to include waste containers with a TRU alpha activity concentration in excess of 100 nCi/g.

- Waste containers belonging to the same TRU waste stream may be overpacked into a payload container (e.g., standard waste box [SWB] or ten-drum overpack [TDOP]) provided the TRU alpha activity concentration of the payload container exceeds 100 nCi/g.

E.3 Prerequisites for Implementation

- Each waste container selected for payload management must be part of the TRU waste stream identified in the acceptable knowledge (AK) summary report for that waste stream (References E2 and E3).

- The AMWTP will submit to the Carlsbad Field Office (CBFO), for its review and approval, applicable plans and procedures for making TRU waste determinations based on payload management practices that involve overpacking of waste containers (Reference E2).

- CBFO will notify Environmental Protection Agency (EPA) of the AMWTP seeking such authorization prior to CBFO's approval of the AMWTP to manage TRU alpha activity concentration using payload management. The WIPP will not accept payload managed waste for disposal until EPA has received notice (Reference E3).

E.4 Implementation and Practice

- Each TRU waste stream selected for payload management must include in its acceptable knowledge summary report an estimate of the total waste volume and the percentage of the waste volume that is above and below 100 nCi/g. (It should be noted that this information, although based on the best available AK information, is preliminary and subject to the performance of WIPP certified NDA measurements and cannot and will not be used as a measure of AK accuracy) (Reference E3).

- Each waste container selected for payload management must contain at least one TRU isotope (e.g., ^{238}Pu, ^{239}Pu, ^{240}Pu, ^{242}Pu, etc.) whose activity exceeds the lower limit of detection (LLD) of the radioassay system used to characterize the waste (Reference E2 and E3). The applicability of LLD will vary from system to system and may be on a container basis. Sections 3.3.1 and A.3 of this document provide the applicable requirements for determining and reporting LLDs.

- Each waste container selected for payload management may only be overpacked into a payload container (e.g., SWB or TDOP) with other waste containers from the same TRU waste stream.

- The TRU alpha activity concentration of the payload container is determined according to Section 3.3.3 of this document.

References

E1. Public Law 102-579, 106 Stat. 4777, 1992 (as amended by Public Law 104-201, 1996). Waste Isolation Pilot Plant Land Withdrawal Act. (http://www.wipp.energy.gov/library/cra/baselinetool/documents/regulatory%20tools/10%20WIPPLWA1996.pdf)

E2. Letter to Mr. Frank Marcinowski (Director, Office of Radiation and Indoor Air, U.S. Environmental Protection Agency), from Dr. Ines R. Triay (Manager, Carlsbad Field Office, U.S. Department of Energy). August 4, 2003.

E3. Letter to Dr. Ines R. Triay (Manager, Carlsbad Field Office, U.S. Department of Energy) from Mr. Frank Marcinowski (Director, Office of Radiation and Indoor Air, U.S. Environmental Protection Agency), August 8, 2003.

Appendix F –
Radiography Requirements for
Contact-Handled Transuranic Waste for EPA Compliance

F.1 Radiography Requirements for Contact-Handled Waste

Radiography aids in the examination and identification of containerized waste. All activities required to achieve radiography objectives are described in INST-OI-12. This appendix applies to radiography of contact-handled (CH) waste; requirements for radiography of remote-handled (RH) waste are found in the Waste Characterization Program Implementation Plan (WCPIP).

A radiography system (e.g., real-time radiography or digital radiography/computed tomography), normally consists of an x-ray-producing device, an imaging system, an enclosure for radiation protection, a waste container handling system, an audio/video recording system, and an operator control and data acquisition station. Although these six components are required, it is expected there will be some variation within a given component between sites. The radiography system shall have controls or an equivalent process, which allow the operator to control image quality. On some radiography systems, it should be possible to vary the voltage between 150 and 400 kilovolts to provide an optimum degree of penetration through the waste.

To perform radiography, the waste container is scanned while the operator views the video monitor. An audio/video recording is made of the waste container scan and is maintained as a non-permanent record. A radiography data form is also used to document the Waste Matrix Code; verify there are no ignitable, reactive, or corrosive wastes present by verification that there is no observable liquid in excess of the waste acceptance criteria (WAC) limits and there are no compressed gases; and estimated waste material parameter weights of the waste.

The estimated waste material parameter and weights for CH waste is determined by compiling an inventory of waste items and packaging materials. The items on this inventory are sorted by waste material parameter and combined with a standard weight look-up table to provide an estimate of waste material parameter weights.

Containers whose contents prevent full examination of the remaining contents shall be subject to visual examination unless the site certifies that visual examination would provide no additional relevant information for that container using acceptable knowledge for the waste stream.

For containers, which contain classified shapes and undergo radiography, the radiography recording shall be considered classified. The radiography data forms will not contain classified information.

F.2 Radiography Training

The radiography system involves qualitative and semi-quantitative evaluations of visual displays. Operator training and experience are the most important considerations for assuring quality controls in regard to the operation of the radiography system and for interpretation and disposition of radiography results. Only trained and qualified radiography operators shall be allowed to operate radiography equipment.

Standardized training and qualification requirements for radiography operators are based upon existing industry standard training requirements as detailed in the radiography qualification package and comply with the training and qualification requirements in MP-RTQP-14.4, Personnel Qualification and Certification.

The AMWTP has developed a training program that provides radiography operators with both formal and on-the-job training (OJT). Radiography operators are instructed in the specific waste generating practices, typical packaging configurations, and associated waste material parameters expected to be found in each Waste Matrix Code at the site. The OJT and apprenticeship is conducted by an experienced, qualified radiography operator prior to qualification of the training candidate. Radiography operators are trained on the types of waste that are generated, stored, or characterized at the AMWTP.

The training program contains the following elements:

- Project Requirements
- State and Federal Regulations
- Basic Principles of Radiography
- Radiographic Image Quality
- Radiographic Scanning Techniques
- Application Techniques
- Radiography of Waste Forms
- Standards, Codes, and Procedures for Radiography
- Site-Specific Instruction.

The training program also contains OJT, which addresses:

- System Operation
- Identification of Packaging Configurations
- Identification of Waste Material Parameters
- Weight and Volume Estimation
- Identification of Prohibited Items.

Radiography test drums contain items common to the waste streams to be generated and stored at the AMWTP. The test drums are divided into layers with varying packing densities or different drums may be used to represent different situations that may occur during radiography examination at the site. Test drums shall be representative of the waste matrix codes for which WSPF approval is sought. Test drums shall be examined and successfully identified prior to waste stream shipment. The following is a list of required elements of a radiography test drum:

- A punctured aerosol can
- Pigtails on poly liners (horsetail bag)
- Pair of coveralls
- Empty bottle
- Irregular shaped pieces of wood
- Empty one-gallon paint can
- Full container
- Aerosol can with fluid
- One-gallon bottle with three tablespoons of fluid
- One-gallon bottle with one cup of fluid (upside down)
- Leaded glove or leaded apron
- Wrench.

These items shall be successfully identified by the operator as part of the qualification process. Qualifications of radiography operators shall, at a minimum, encompass the following requirements:

- Successfully pass a comprehensive exam based upon training enabling objectives. The comprehensive exam will address all of the radiography operations, documentation, characterization and procedural elements stipulated in this WAC.

- Perform a practical capability demonstration in the presence of appointed site radiography subject matter expert. The person will be an experienced radiography operator who is also qualified as an OJT trainer.

Requalifications of operators are based on evidence of continued satisfactory performance (primarily audio/video recording reviews), and shall be done at least every two years. Unsatisfactory performance will result in disqualification. Unsatisfactory performance is defined as the misidentification of a prohibited item in a training container or a score of less than 80% on the comprehensive exam. Retraining and demonstration of satisfactory performance are required before a disqualified operator is again allowed to operate the radiography system.

A training container with internal containers of various sizes is scanned semiannually by each operator. The audio/video recording is then reviewed by a supervisor to ensure that operator's interpretations remain consistent and accurate. Imaging system characteristic shall be verified on a routine basis.

F.3 Quality Control

Independent replicate scans and replicate observations of the video output of the radiography process are performed under uniform conditions and procedures. Independent replicate scans are performed on one waste container per day or once per testing batch, whichever is less frequent. Independent observations of one scan (not the replicate scan), are also made once per day or once per testing batch, whichever is less frequent, by a qualified radiography operator other than the individual who performed the first examination. A testing batch is a suite of waste containers undergoing radiography using the same testing equipment. A testing batch can be up to 20 waste containers without regard to waste matrix.

Oversight functions include periodic audio/video recording reviews of accepted waste containers by a qualified radiography operator other than the operator who dispositioned the waste container. The results of this independent verification are made available to the radiography operator.

F.4 Data Review and Validation

A testing batch data report for data validation and QA purposes is required when radiography is used to characterize waste. A testing batch data report (or equivalent) includes data pertaining to radiography for up to 20 waste containers or samples.

All measurement data must be reviewed and approved by qualified personnel prior to being reported. Reviews shall meet the requirements of the Quality Assurance Program Document (QAPD). At a minimum, the data must be reviewed by an independent technical reviewer and approved by the Site Project Manager (SPM) or designee. This review shall be performed by an individual other than the data generator who is qualified to have performed the initial work. The independent technical reviewer verifies, at a minimum, the following information:

- Data generation and reduction were conducted in a technically correct manner in accordance with the methods used (verification of procedure and revision).

- Data were reported in the proper units and correct number of significant figures.
- Calculations have been verified by a valid calculation program, a spot check of verified calculation programs, and/or 100 percent check of all hand calculations.
- Values that are not verifiable to within rounding or significant difference discrepancies must be rectified prior to completion of independent technical review.
- The data have been reviewed for transcription errors.
- The testing QA documentation for batch data reports is complete and includes, as applicable, raw data, calculation records, calibration records (or references to an available calibration package), list of containers in the batch, and quality control (QC) sample results. Corrective action will be taken to ensure that all batch data reports are complete and include all necessary raw data prior to completion of the independent technical review.
- Quality control sample results are within established control limits and, if not, the data have been appropriately dispositioned using the nonconformance process. This shall include complete summarized qualitative and quantitative data for all waste containers with data flags or qualifiers.
- Radiography tapes have been reviewed (independent observation) on a waste container basis at a minimum of once per testing batch or once per day of operation, whichever is less frequent.
- The container contains no indication that there is observable liquid in excess of this waste acceptance criteria, no indication of compressed gas, no indication of incompatible wastes, and the physical form matches the Waste Matrix Code.
- The appropriate Quality Assurance Objectives (QAOs) have been met.

All data are approved by the SPM or designee. The SPM verifies, at a minimum, the following information:

- Data generation-level independent technical review, validation, and verification have been performed as evidenced by the completed review checklists and appropriate signature release. Batch data review checklists are complete.

- Batch data reports are complete and data are properly reported (e.g., data are reported in the correct units and with the correct number of significant figures).

- Data meet all applicable Quality Assurance Objectives.

The SPM provides a SPM Summary and a Data Validation Summary for each batch data report. These reports are combined and consist of a detailed checklist documenting that the batch has been adequately reviewed and that the data meet program objectives.

To ensure that data of known and documented quality are generated, each participating measurement facility shall implement a documented facility QA program. Facility QA programs shall specify qualitative and quantitative acceptance criteria for the QC checks of this program, and corrective actions to be taken when these criteria are not satisfied. Only appropriately trained and qualified personnel shall be allowed to perform data validation/review.

Appendix G –
Visual Examination Requirements for
Contact-Handled Transuranic Waste for EPA Compliance

G.1 Visual Examination Requirements for Contact-Handled Waste

This appendix applies to visual examination (VE) requirements for contact handled (CH) waste; requirements for visual examination of remote handled (RH) waste are found in the Waste Characterization Program Implementation Plan (WCPIP).

Contact-handled waste container contents may be verified directly by performing VE on the waste container contents. Visual examination may also be performed during packaging or repackaging of waste.

Visual examination does not require audio/video recordings of the examination; the examination is documented on a data form and certified with signatures from two qualified VE operators. If the second operator cannot verify the descriptions of the first operator, corrective actions will be taken in accordance with the established Quality Assurance (QA) Program.

Visual examination is conducted to describe all contents of a waste container and includes estimated or measured weights of the contents. The description clearly identifies all discernible waste items, packaging materials, and waste material parameters. Visual examination activities shall be documented on VE data forms.

Visual examination audio/video recordings of containers that contain classified shapes shall be considered classified information. Visual examination data forms will not contain classified information.

G.2 Visual Examination Training

Visual examination consists of a semi-quantitative and qualitative evaluation of the waste container contents and may be recorded on audio/video recording media. Standardized training for VE has been developed to include both formal classroom training and on the job (OJT). Personnel performing VE are instructed in the specific waste generating processes, typical packaging configurations, and the waste material parameters expected to be found in each Waste Matrix Code at the site. The OJT and apprenticeship is conducted by an operator experienced and qualified in VE prior to qualification of the candidate. The training shall be site-specific to include the various waste configurations at the site. Training and qualification requirements for VE are detailed in the VE qualification package in accordance with MP-RTQP-14.4, Personnel Qualification and Certification. Visual examination operators need only be trained to the physical forms and packaging configurations used on the waste stream that they are examining and packaging. Visual examination personnel are requalified once every 2 years.

Training shall address the following required elements:

- Project requirements
- State and Federal regulations
- Application techniques
- Site-specific instruction.

Training shall also include OJT that addresses:

- Identification of Packaging Configurations
- Identification of Waste Material Parameters
- Weight and Volume Estimation
- Identification of Prohibited Items.

Each VE facility shall designate one or more VE experts. The VE expert is familiar with the waste generating processes and with all types of waste being characterized at that site. The VE expert shall be responsible for the overall direction and implementation of the visual examination at the AMWTP. The VE expert receives training in the same elements as the visual examination personnel, including both formal training and OJT. Qualification of a VE expert is based on familiarity with waste generating processes, familiarity with the types of waste being characterized, and meeting the training requirements discussed above. Consistent with other VE personnel, the VE expert is requalified once every two years. Visual Examination Expert (VEE) training requirements are detailed in the VEE qualification package in accordance with MP-RTQP-14.4.

G.3 Method

Visual examination recorded on video/audio media shall meet the following minimum requirements:

- The video/audio media shall record the waste packaging event for the container such that all waste items placed into the container are recorded in sufficient detail and shall contain an inventory of waste items in sufficient detail that another trained VE operator can identify the associated waste material parameters.

- The video/audio media shall capture the waste container identification number.

- The personnel loading the waste container shall be identified on the video/audio media or on packaging records traceable to the loading of the waste container.

- The date of loading of the waste container will be recorded on the video/audio media or on packaging records traceable to the loading of the waste container.

Visual examination performed using two operators shall meet the following minimum requirements:

- At least two site personnel who witnessed the packaging of the waste shall approve the data forms or packaging records attesting to the contents of the waste container.
- The data forms or packaging records shall contain an inventory of waste items in sufficient detail that a trained VE operator can identify the associated waste material parameters.
- The container identification number shall be recorded on the data forms or packaging records.

A description of the waste container contents is recorded on a VE data form. The description clearly identifies all waste material parameters and provides enough information to estimate weights of waste material parameters. In cases where bags are not opened, a brief written description of the contents of the bags shall contain an estimate of the amount of each waste type in the bags. The written records of VE are supplemented with the audio/videotape recording, if applicable.

G.4 Data Review and Validation

A testing batch data report for data validation and QA purposes is required when VE is used to characterize waste. A testing batch data report (or equivalent) includes data pertaining to VE for up to 20 waste containers or samples.

All measurement data is reviewed and approved by qualified personnel prior to being reported. Reviews shall meet the requirements of the Quality Assurance Program Document (QAPD). At a minimum, the data is reviewed by an independent technical reviewer and approved by the Site Project Manager (SPM) or designee. This review is performed by an individual other than the data generator who is qualified to have performed the initial work. The independent technical reviewer verifies, at a minimum, the following information:

Data generation and reduction were conducted in a technically correct manner in accordance with the methods used (verification of procedure and revision).

- Data were reported in the proper units and correct number of significant figures.

- Calculations have been verified by a valid calculation program, a spot check of verified calculation programs, and/or 100 percent check of all hand calculations.
- Values that are not verifiable to within rounding or significant difference discrepancies must be rectified prior to completion of independent technical review.
- The data have been reviewed for transcription errors.
- The testing QA documentation for batch data reports is complete and includes, as applicable, raw data, calculation records, and list of containers in the batch. Corrective action will be taken to ensure that all batch data reports are complete and include all necessary raw data prior to completion of the independent technical review.
- The container contains no indication that there is observable liquid in excess of this waste acceptance criteria, no indication of compressed gas, no indication of incompatible wastes, and the physical form matches the Waste Matrix Code.
- The appropriate quality assurance objectives (QAOs) have been met.

All data must be approved by the SPM or designee. The SPM verifies, at a minimum, the following information:

- Data generation-level independent technical review, validation, and verification have been performed as evidenced by the completed review checklists and appropriate signature release. Batch data review checklists are complete.
- Batch data reports are complete and data are properly reported (e.g., data are reported in the correct units and with the correct number of significant figures).
- Data meet all applicable Quality Assurance Objectives.

The SPM provides an SPM Summary and a Data Validation Summary for each batch data report. These reports are combined and consist of a detailed checklist documenting that the batch has been adequately reviewed and that the data meet program objectives.

To ensure that data of known and documented quality are generated, each participating measurement facility shall implement a documented facility QA program. Facility QA programs shall specify qualitative and quantitative acceptance criteria for the quality control (QC) checks of this program, and corrective actions to be taken when these criteria are not satisfied. Only appropriately trained and qualified personnel are allowed to perform data validation/review.

Quality Assurance Project Plan

Advanced Mixed Waste Treatment Project

(Signature on file. See DCR-11920.)

06/11/13
Date

AMWTP MANAGEMENT PROCEDURE		
MP-TRUW-8.2, Rev. 17	Issued: 06/11/13	Effective: 06/12/13
Quality Assurance Project Plan		

DOCUMENT APPROVAL SHEET

Document Type: Compliance Plan **Document Number:** MP-TRUW-8.2

Title: Quality Assurance Project Plan

Author: Gina Tedford **Phone:** (208) 557-6449

Document Owner: Angie Morse **Phone:** (208) 557-6479

REVIEW CONCURRENCE AND APPROVAL SIGNATURES

Denote R for review concurrence, A for approval, as appropriate.

Type or Print Name	R/A	Date	Organization Discipline	Mailing Address
Signature				
Eric Schweinsberg *George Byram for Eric Schweinsberg (Signature on File)*	A	6/10/13	Site Project Manager	850 Energy Drive Idaho Falls, ID 83401-1502
Angie Morse *Signature on File*	A	06/10/13	Site QA Manager	850 Energy Drive Idaho Falls, ID 83401-1502
Martin Navarrete *Signature on File*	A	6/10/13	DOE-CBFO, Director, Office of Quality Assurance	DOE-CBFO Carlsbad, NM 88221
J. R. Stroble *Signature on File*	A	6/10/13	DOE-CBFO, Director, Office of the National TRU Program	DOE-CBFO Carlsbad, NM 88221

REVISION LOG

Revision Number	Date Approved	Pages Affected	Description of Revision
0	08/29/02	All	Initial issue. DCR-2002-1171. Document issue date was 08/29/02. DOE/WIPP approval was received 09/09/02 thus the change in effective date to 09/12/02.
1	02/26/03	Various	DCR-1821. Correct procedure titles and numbers. Added DOE-ID to the Document Approval Sheet in accordance with MP-DOCS-18.4. Document issue date was 12/19/02. DOE/WIPP approval was received 02/25/03 thus the change in effective date to 02/26/03.
2	03/10/03	12, 153	DCR-2094. Added changes to the training sections A-7 & B3-14. Document issue date was 03/10/03. DOE/WIPP approval was received 03/17/03. The change in effective date is 03/31/03.
3	08/19/04	Various	DCR-2895: Revised to reflect the addition of new headspace gas sampling system, references to facility procedures and updates to NMED's WAP. Incorporation of CBFO review comments
4	04/18/05	P69	DCR-3280. Add text to P.69, B1-1a(5): "This Section is applicable to the AMWTP such that sampling and analysis may be performed by other contractors. Level I validation will be performed by a subcontractor. Level II validation will be performed by the AMWTP PLV&V group."
5	06/09/05	54, 55	DCR-4365 Incorporation of Class 1 Permit Modification Notification to Revise Language for Compacted 55-Gallon Drums With Rigid Liners, April 27, 2005 and WIPP Memorandum CBFO:OCT:KWW:VW:05-1164-UFC:5822. Incorporated the procedure to implement the UFGTP long-term objective.
6	02/03/06	All	DCR-4640. Periodic Review. Added carbon disulfide to the target analyte list in Table B3-2. Various editorial changes.

Revision Number	Date Approved	Pages Affected	Description of Revision
7	06/01/06	Various	DCR-5039. Change reference to reflect change in contractor. Editorial. BBWI address change. Optional headspace system configuration.
8	01/04/2007	All	DCR-5381. Implementation of the NMED 311 Permit modification. Incorporate CBFO DRR comments, AMWTP organization, OI-34 title change (global), and effective date to 1/24/07
9	08/09/07	Various	DCR-6104. Incorporate WIPP Class 1 Permit modifications, update procedural titles and references, and editorial changes.
10	10/24/07	Various	DCR-6307. Incorporate August 2007 WIPP Class 1 permit modifications.
11	08/29/08	Various	DCR-6887. Incorporate the Class 1 Permit Notifications, July, 2008. Add references to INST-OI-75, INST-OI-81, and CCP procedures. Update organization chart in Figure B5-1.
12	12/22/09	Various	DCR-8769. Annual review: updated the overview, description of the site, project description, and AMWTP organizations and responsibilities, WDS implementation; added characterization and AK of off-site waste, and update analytical lab name and location. Editorial changes consistent with MP-DOCS-18.3.
13	05/27/10	Various	DCR-9164. Incorporate Class 2 PMR change for liquid, VE, and NCRs.
14	12/17/10	Various	DCR-9605. Incorporate the new WIPP Hazardous Waste Permit Renewal structure (attachments and sections from B to C and modules to parts/subparts), revise the definitions of *waste stream* and *ITR*, delete (cis)1, 2-dichloroethylene, clarify the RTR training drum VEE training, RTR independent replicate scan and oversight functions, and AK.

Revision Number	Date Approved	Pages Affected	Description of Revision
15	06/20/11	Various	DCR-10191. Incorporate the Class 2 PMR to add the TRUPACT-III and Standard Large Box 2. Also incorporated editorial comments from the Class 1 permit notification dated 07/11/2011.
16	06/14/12	Various	DCR-10657. Annual review. Added sentence on Page 128. Incorporated ITG BLUESHEET-073. Updated acronyms and references.
17	06/11/13	Various	DCR-11920. Changes to implement PMR NM4890139088-TSDF, Class 2 Permit Modification dated: November 27, 2012, and March 13, 2013, which revises the Waste Analysis Plan (WAP) waste characterization methods that remove requirements for headspace gas and solid sampling and analysis, and adds the shielded container as a shipping package.

TABLE OF CONTENTS

A. INTRODUCTION 1

A-0 Scope 1

A-1 Overview 1

A-2 Description of the Site 2

B. PROJECT DESCRIPTION 2

B-0 AMWTP Organization and Responsibilities 2

C. WASTE ANALYSIS PLAN 5

C-0 Introduction and Highlights 5

C-0a Waste Characterization 7
C-0b AK Sufficiency Determination 9
C-0c Waste Stream Profile Form Completion 11
C-0d Waste Confirmation 12

C-1 Identification of TRU Mixed Waste to be Managed at the WIPP Facility 12

C-1a Waste Stream Identification 12
C-1b Waste Summary Category Groups and Hazardous Waste Accepted at the WIPP Facility 12
C-1c Waste Prohibited at the WIPP Facility 12
C-1d Control of Waste Acceptance 14
C-1e Waste Generating Processes at the WIPP Facility 14

C-2 Waste Characterization Program Requirements and Waste Characterization Parameters 15

C-3 Generator Waste Characterization Methods 16

C-3a Acceptable Knowledge 16
C-3b Radiography and Visual Examination 17

C-4 Data Verification and Quality Assurance 18

C-4a Data Generation and Project Level Verification Requirements 18

C-5 CBFO Level Waste Stream Screening and Verification of TRU Mixed Waste 21

C-6 CBFO's Waste Shipment Screening QA/QC 28

C-7 Records Management and Reporting 28

C-8 Reporting 29

Attachment C1. Waste Characterization Testing Methods 41

C1-1 Radiography 41

C1-2 Visual Examination 43

Attachment C2. Reserved 46

Attachment C3. Quality Assurance Objectives and Data Validation Techniques for Waste Characterization Methods 47

C3-1 Validation Methods 47

C3-2 Non-Destructive Examination Methods 48

C3-3 Acceptable Knowledge 49

C3-4 Data Review, Validation, and Verification Requirements 50

C3-4a Data Generation Level 51
C3-4b Project Level 53
C3-4c CBFO Level 54

C3-5 Reconciliation with Data Quality Objectives 54

C3-5a Reconciliation at the Project Level 54
C3-5b Reconciliation at the CBFO Level 55

C3-6 Data Reporting Requirements 55

C3-6a Data Generation Level 55
C3-6b Project Level 56

C3-7 Nonconformances 58

C3-8 Special Training Requirements and Certifications 60

C3-9 Changes to Plans and Procedures 61

Attachment C4. TRU Waste Characterization Using Acceptable Knowledge 64

C4-1 Introduction 64

C4-2 Acceptable Knowledge Documentation 65

C4-2a Required TRU Mixed Waste Management Program Information 65
C4-2b Required TRU Mixed Waste Stream Information 66

C4-2c Additional Acceptable Knowledge Documentation 68
C4-3 Acceptable Knowledge Training, Procedures, and Other Requirements 69
C4-3a Qualifications and Training Requirements 69
C4-3b Acceptable Knowledge Assembly and Compilation 70
C4-3c Criteria for Assembling an Acceptable Knowledge Record and Delineating the Waste Stream 71
C4-3d AK Sufficiency Determination Request Contents 72
C4-3e Requirements for Re-Evaluating AK Information 73
C4-3f Acceptable Knowledge Data Quality Requirements 74
C4-3g Audits of Acceptable Knowledge 75
Attachment C5. Quality Assurance Project Plan Requirements 76
C5-1 Quality Assurance Project Plans 76
C5-2 Document Review, Approval, and Control 76
Attachment C6. Audit and Surveillance Program 79
C6-1 Introduction 79
Attachment C7. TRU Waste Confirmation 81
C7-1 Permittee Confirmation of TRU Mixed Waste 81
C7-1a Permittee Confirmation of a Representative Subpopulation of the Waste 81
C7-1a(1) Confirmation Training Requirements 82
C7-1b Radiography Methods Requirements 82
C7-1c Visual Examination Methods Requirements 82
C7-2 Noncompliant Waste Identified During Waste Confirmation 84
D. RECORDS PROCESSING 85
E. REFERENCES 85
E-0 AMWTP Documents 85
E-1 External References 86
F. GLOSSARY 89
F-0 Acronyms and Abbreviations 89

FIGURES

Figure B-1. AMWTP Organization. 4

Figure C-1.WIPP waste stream profile form (example only). 36

Figure C-2. Waste characterization process. 38

Figure C-3. TRU mixed waste screening and verification flow diagram. 39

TABLES

Table C-1. Summary of Characterization Requirements for Transuranic Mixed Waste[a]. 30

Table C-2. Summary of Parameters, Characterization Methods, and Rationale for Transuranic Waste. 31

Table C-3. Required Program Records Maintained in AMWTP Project Files. 32

Table C-4. Waste Data System/WIPP Waste Information System Data Fields[a]. 33

Table C-5. Waste Tanks Subject to Exclusion. 34

Table C-6. Listing of Permitted EPA Hazardous Waste Numbers. 35

Table C3-1. Waste Material Parameters and Descriptions. 61

Table C3-2. Minimum Training and Qualification 62

Table C3-3.Testing Batch Data Report Contents 62

Table C5-1. Minimum requirements for review, approval, implementation, and control of QAPjP 77

AMWTP MANAGEMENT PROCEDURE		
MP-TRUW-8.2, Rev. 17	Issued: 06/11/13	Effective: 06/12/13

Quality Assurance Project Plan

A. INTRODUCTION

The Advanced Mixed Waste Treatment Project (AMWTP) characterizes and certifies contact-handled (CH) transuranic (TRU) waste for disposal at the Waste Isolation Pilot Plant (WIPP). The AMWTP has developed this Quality Assurance Project Plan (QAPjP) to comply with the *WIPP Hazardous Waste Facility Permit* (NMED 1999), *Attachment C, Waste Analysis Plan* (WIPP-WAP).The format of this document parallels that of the WIPP-WAP.

A-0 Scope

This QAPjP describes how the characterization and certification requirements of the WIPP-WAP are met at the AMWTP. The Site Project Manager (SPM) will ensure any conflicts between this QAPjP and any existing WIPP-WAP requirements are resolved.

This QAPjP implements the applicable requirements of United States (U.S.) Department of Energy (DOE)/Carlsbad Field Office (CBFO)-94-1012, Quality Assurance Program Document, which identifies the quality of data necessary to maintain quality.

A-1 Overview

The AMWTP is operated under a non-commercial contract with the DOE and is located at the Idaho National Laboratory's (INL) Radioactive Waste Management Complex (RWMC).

The AMWTP plans to dispose of approximately 65,000 m^3 of contact-handled transuranic (CH-TRU) waste at the WIPP. The AMWTP retrievably-stored waste was generated by multiple DOE sites (i.e., Rocky Flats Plant, Mound, Battelle Columbus, Hanford and the AMWTP) through defense program activities, or commingled with non–defense waste that cannot be segregated. The waste was generated during plutonium operations, depleted uranium component fabrication; enriched uranium processing; support operations including radionuclide recovery, waste treatment, maintenance, laboratory analysis, and machining of non-nuclear weapon components; research and development (R&D); special order work; fabrication of ^{238}Pu heat sources and manufacture of radioisotopic thermoelectric generators; decontaminating and decommissioning activities; and materials development. The newly generated debris waste stream is generated from supercompaction of 55-gallon containers of debris waste. TRU mixed waste processed at the AMWTP is currently stored in drums, boxes, and bins in the Transuranic Storage Area (TSA) Retrieval Enclosure (RE) and in Type II storage modules.

Each waste stream is assigned to a waste category summary to facilitate Resource Conservation and Recovery Act (RCRA) waste characterization and reflect the final waste forms acceptable for WIPP disposal. The majority of TRU mixed waste is CH-TRU. Although some remote-handled (RH) TRU waste will be encountered during the retrieval operations, the RH-TRU waste will be segregated from the CH-TRU and will not be shipped to the WIPP by the AMWTP.

Approximately 95% of the TRU waste stored at the RWMC contains hazardous waste regulated under the RCRA. Mixed waste refers to waste that is both radioactive and contaminated by hazardous constituents, and is regulated by both the Atomic Energy Act and RCRA. Some of the waste may also contain Toxic Substance Control Act-regulated material such as polychlorinated biphenyls (PCBs) and asbestos.

Capabilities established to support the TRU waste management mission include: storage, characterization (nondestructive examination [NDE], nondestructive assay, and treatment), as appropriate. Transportation and chemical analysis of homogeneous solids are performed by the Central Characterization Project (CCP).

A-2 Description of the Site

The AMWTP is located in the southwest corner of the INL. The INL, located approximately 30 miles west of Idaho Falls, encompasses 900 square miles. Facilities supporting characterization, treatment, certification, and transportation activities are located within the INL at the RWMC.

B. PROJECT DESCRIPTION

Consistent with requirements in the WIPP-WAP, AMWTP uses acceptable knowledge (AK) to initially characterize TRU waste which provides the basis for identifying TRU waste streams eligible for WIPP disposal. A waste stream is defined as waste materials that have common physical form, that contain similar hazardous constituents, and that are generated from a single process or activity. Once a waste stream has been identified, characterization information must be collected in order to complete and submit the WIPP Waste Stream Profile Form (WSPF) to the CBFO for approval. Waste characterization activities include the following, although not all of these techniques are used on each container: AK, radioassay (RA), real-time radiography (RTR), and visual examination (VE). RA characterization is addressed in MP-TRUW-8.1, *Certification Plan for INL Transuranic Waste*. Data generated by these methods are assessed on a waste stream basis. For each waste stream characterized, the SPM determines if sufficient data have been collected to determine the waste parameters required for completion of the WSPF. After a WSPF has been submitted to and approved by CBFO, characterization activities continue until an AK Sufficiency Determination is submitted and approved by CBFO.

B-0 AMWTP Organization and Responsibilities

The AMWTP organization and responsibilities for implementation of the requirements of this QAPjP are described in the following sections. Figure B-1 provides the organization structure.

President and Project Manager has overall responsibility for all aspects of the AMWTP, which includes permitting, operations, characterization, and certification.

Plant Manager is responsible for the production, maintenance, and implementation necessary to support waste treatment and disposal.

TRU Programs Manager is responsible for the management and direction of activities related to the characterization, certification, transportation, and disposal of TRU waste destined for WIPP. The TRU Programs Manager's responsibilities include the following:

- Providing the necessary planning, organization, direction, control, resources, and support to achieve the defined objectives
- Ensuring compliance with all applicable regulations, DOE orders and requirements, and applicable Federal, state, and local laws
- Developing, implementing, and maintaining plans, policies, and procedures that implement WIPP requirements
- Ensuring that adequate technical and quality assurance (QA) training are provided for personnel performing WIPP activities
- Ensuring that personnel adhere to procedures for the generation, identification, control, and protection of QA records
- Identifying, investigating, reporting, and correcting quality problems.

Site Project Manager has overall responsibility for TRU waste characterization and certification activities and is responsible for the following:

- Development, maintenance, review, and implementation of procedures and reports
- Review and approval of the QAPjP and subsequent revisions
- Waste selection and tracking
- Validation/verification of data
- Reconciliation of data with data quality objectives (DQOs)
- Assignment of EPA hazardous waste numbers (HWNs)
- Preparation and submission of SPM Data Validation Summaries, WSPFs, Characterization Information Summaries, and Waste Stream Characterization Packages (if requested by CBFO)

- Review of the QA/semiannual report, commenting if appropriate, and forwarding a copy of the report with comments to DOE-ID.

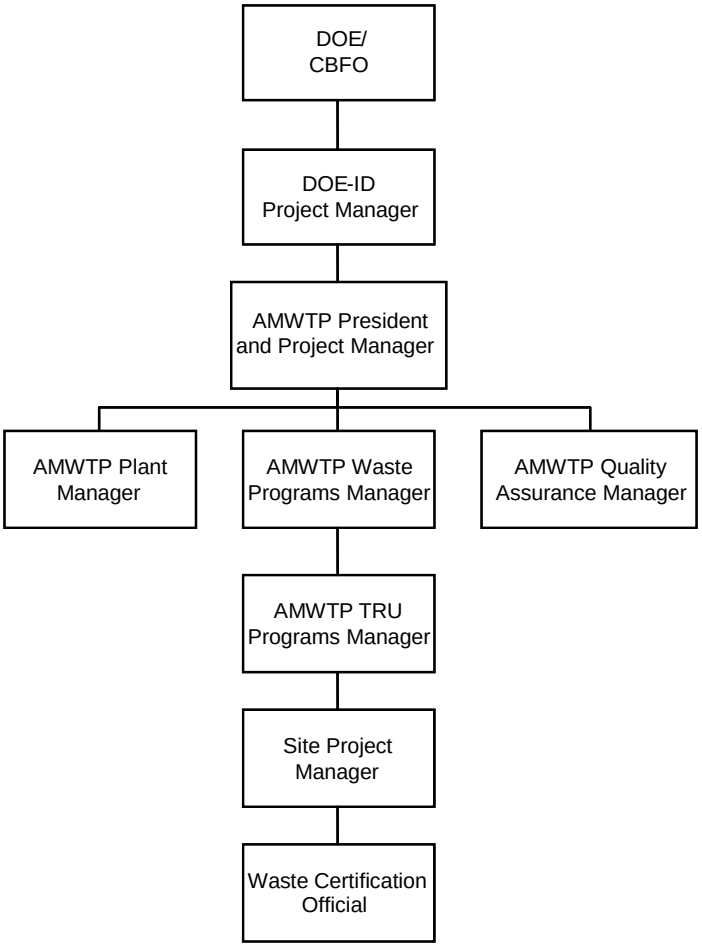

Figure B-1. AMWTP Organization.

C. WASTE ANALYSIS PLAN

C-0 Introduction and Highlights

This QAPjP has been prepared for the management, storage, or disposal activities to be conducted at the WIPP facility to meet the requirements set forth in 20.4.1.500 New Mexico Administrative Code (NMAC; incorporating 40 Code of Federal Regulations [CFR] §264.13). Guidance in the most recent U.S. Environmental Protection Agency (EPA) manual on waste analysis has been incorporated into the preparation of the WIPP-WAP (EPA 1994). This QAPjP includes test methods, details of planned waste analysis for complying with the general waste analysis requirements of 20.4.1.500 NMAC (incorporating 40 CFR §264.13), a description of the waste shipment screening and verification process, and a description of the quality assurance/quality control (QA/QC) program. The AMWTP will implement the requirements of the WIPP-WAP prior to offering waste for shipment and disposal at WIPP.

TRU mixed wastes stored at the AMWTP were generated by DOE generator/storage sites by various specific processes and activities. Examples of the major types of operations that generated these wastes include:

- Production of Nuclear Products – Production of nuclear products includes reactor operation, radionuclide separation/finishing, and weapons fabrication and radionuclide separation/finishing processes. More specifically, wastes consist of residues from chemical processes, air and liquid filtration, casting, machining, cleaning, product quality sampling, analytical activities, and maintenance and refurbishment of equipment and facilities.

- Plutonium Recovery – Plutonium recovery wastes are residues from the recovery of plutonium-contaminated molds, metals, glass, plastic, rags, salts used in electro refining, precipitates, firebrick, soot, and filters.

- Research and Development – R&D projects include a variety of hot cell or glovebox activities that often simulate full-scale operations described above, producing similar TRU mixed wastes. Other types of R&D projects include metallurgical research, actinide separations, process demonstrations, and chemical and physical properties determinations.

- Decontamination and Decommissioning – Facilities and equipment that are no longer needed or usable are decontaminated and decommissioned, resulting in TRU mixed wastes consisting of scrap materials, cleaning agents, tools, piping, filters, Plexiglas, gloveboxes, concrete rubble, asphalt, cinder blocks, and other building materials.

TRU mixed waste contains both TRU radioactive and hazardous components, as defined in Permit Section 1.5.7. TRU and TRU mixed waste are designated and separately packaged as either CH or RH based on the radiological dose rate at the surface of the waste container.

The hazardous components of the TRU mixed waste to be managed at the WIPP are designated in Table C-6. Some of the waste may also be identified by unique state hazardous waste codes or numbers. These wastes are acceptable at WIPP as long as the WIPP Hazardous Waste Permit Treatment, Storage, and Disposal Facility (TSDF) Waste Acceptance Criteria (WAC) in Part 2 are met. This QAPjP describes the measures that will be taken to ensure that the TRU mixed wastes received at the WIPP facility are within the scope of Table C-6 as established by 20.4.1.500 NMAC (incorporating 40 CFR §264), and that they comply with unit-specific requirements of 20.4.1.500 NMAC (incorporating 40 CFR §264.600, Miscellaneous Units.)

Some TRU waste is retrievably stored at the AMWTP. Additional TRU waste is generated and packaged into containers. Retrievably stored waste is defined as TRU mixed waste generated after 1970 and before the New Mexico Environment Department (NMED) notifies the CBFO, by approval of the final audit report, that the characterization requirements of the WAP have been implemented. Newly-generated waste is defined as TRU mixed waste generated after NMED approves the final audit report. Acceptable Knowledge information is assembled for both retrievably stored and newly generated waste. Waste characterization of retrievably stored TRU mixed waste will be performed on an ongoing basis, as the waste is retrieved. Waste characterization of newly-generated TRU mixed waste is typically performed as it is generated, although some characterization occurs post-generation. Waste characterization is defined in Part 1 of the WIPP RCRA Permit as the activities performed by the waste generator to satisfy the general waste analysis requirements of 20.4.1.500 NMAC (incorporating 40 CFR §240.13[a]) before waste containers have been certified for disposal at WIPP. The characterization process for WIPP waste is presented in Figure C-2. AMWTP's waste characterization program was first audited by CBFO in August 2003, with NMED approving the final audit report. After this, AMWTP determines whether AK alone is sufficient for characterization, or whether radiography or VE in conjunction with AK is necessary to adequately characterize wastes. If an AK Sufficiency Determination is sought, information is provided to the CBFO for their review and provisional approval. NMED determination of adequacy of the AK information is required before final approval by the CBFO. If the radiography or VE route is chosen, the AMWTP will proceed to perform radiography or VE in conjunction with AK and in accordance with this QAPjP. Once an AK Sufficiency Determination is obtained, or when required, radiography or VE data are obtained, the AMWTP would then prepare and submit the WSPF for CBFO approval. Once the WSPF is approved, AMWTP may ship waste to WIPP. AMWTP will provide sufficient data to allow CBFO to perform waste confirmation prior to shipment of the waste from AMWTP to WIPP pursuant to Section C7 by performing RTR or VE of a representative subpopulation of certified waste containers, to ensure that the wastes meet the applicable requirements of the TSDF-WAC.

C-0a Waste Characterization

Characterization requirements for individual containers of TRU mixed waste are specified on a waste stream basis. A waste stream is defined as waste materials that have common physical form, that contain similar hazardous constituents, and that are generated from a single process or activity. Waste streams are grouped by Waste Matrix Code Groups that relate to the physical and chemical properties of the waste. The AMWTP uses the characterization techniques described in the WIPP-WAP to assign appropriate Waste Matrix Code Groups to waste streams for WIPP disposal. The Waste Matrix Code Groups are solidified inorganics, solidified organics, salt waste, soils, lead/cadmium metal, inorganic nonmetal waste, combustible waste, graphite, filters, heterogeneous debris waste, and uncategorized metal. Waste Matrix Code Groups can be grouped into three Summary Category Groups: Homogeneous Solids (Summary Category S3000), Soil/Gravel (Summary Category S4000), and Debris Waste (Summary Category S5000).

TRU mixed waste are initially categorized into the three broad Summary Category Groups that are related to the final physical form of the waste. This categorization is based on the summary category group constituting the greatest volume of waste for a waste stream. Waste characterization requirements for these Summary Category Groups are specified in Section C-2 of this document. Each of the three broad groups is described below.

- S3000 – Homogeneous Solids

  Homogeneous solids are defined as solid materials, excluding soil, that do not meet the NMED criteria for classification as debris (20 NMAC 4.1.800, incorporating 40 CFR §268.2[g] and [h]). Included in the series of homogeneous solids are inorganic process residues, inorganic sludges, salt waste, and pyrochemical salt waste. Other waste streams are included in this Summary Category Group based on the specific waste stream types and final waste form. This Summary Category Group is expected to contain toxic metals and spent solvents. This category includes wastes that are at least 50 percent by volume homogeneous solids.

- S4000 – Soils/Gravel

  This Summary Category Group includes S4000 waste streams that are at least 50 percent by volume soil/gravel. This Summary Category Group is expected to contain toxic metals.

- S5000 – Debris Wastes

  This Summary Category Group includes heterogeneous waste that is at least 50 percent by volume materials that meet the criteria specified in 20 NMAC 4.1.800 (incorporating 40 CFR §268.2[g]). Debris means solid material exceeding a 2.36-inch (60 millimeter [mm]) particle size that is intended for disposal and that is:

  1. A manufactured object, or
  2. Plant or animal matter, or
  3. Natural geologic material.

  Particles smaller than 2.36 inches in size may be considered debris if the debris is a manufactured object and if it is not a particle of S3000 or S4000 material.

The AMWTP characterizes waste in accordance with this QAPjP and ensures that waste proposed for storage and disposal at WIPP meets the applicable requirements of the WIPP Hazardous Waste Permit TSDF-WAC. The AMWTP assembles the AK information into an auditable record[a] for the waste stream as described in Attachment C4. For those waste streams with an approved AK Sufficiency Determination, radiography or VE per the methods described in Attachment C1 is not required.

All waste characterization activities specified in this QAPjP are carried out at the AMWTP and, as applicable, at the WIPP approved laboratories in accordance with the WIPP-WAP. CBFO will audit generator/storage site waste characterization programs and activities as described in Section C-3. Waste characterization activities at the AMWTP include the following, as discussed in Section C-3:

- Real-time radiography, which is an x-ray technique to determine physical contents of containers
- Visual examination of opened containers as an alternative way to determine their physical contents
- Compilation of AK documentation into an auditable record.

a. "Auditable Records" are those records which allow the CBFO to conduct a systematic assessment, analysis, and evaluation of the site's compliance with the QAPjP and the WIPP RCRA Permit.

C-0b AK Sufficiency Determination

AMWTP may submit a request to the CBFO for an AK Sufficiency Determination (Determination Request) to be exempt from the requirement to perform radiography or VE based on AK. The contents of the Determination Request are specified in Permit Attachment C4, Section C4-3d.

The CBFO shall evaluate the Determination Request for completeness and technical adequacy. This evaluation shall include, but be limited to whether the Determination Request is technically sufficient for the following:

- The Determination Request must include all information specified in Attachment C4, Section C4-3d.
- The AK Summary must identify relevant hazardous constituents and must correctly identify all TC and listed EPA HWNs.
- All EPA HWN assignments must be substantiated by supporting data and, if not, whether this lack of substantiation compromises the interpretation.
- Resolution of data discrepancies between different AK sources must be technically correct and documented.
- The AK Summary must include all the identification of waste material parameter weights by percentage of the material in the waste stream and determinations must be technically correct.
- All prohibited items specified in the WIPP Hazardous Waste Permit TSDF-WAC should be addressed and conclusion drawn must be technically adequate and substantiated by supporting information.
- If the AK record includes process control information specified in Attachment C4, Section C4-3b, the information should include procedures, waste manifests, or other documentation demonstrating that the controls were adequate and sufficient.
- The AMWTP must provide the supporting information necessary to substantiate technical conclusions within the Determination Request and this information must be correctly interpreted.

The CBFO will review the Determination Request for technical adequacy and compliance with the requirements of the WIPP-WAP, using trained and qualified individuals in accordance with the standard operating procedures that, at a minimum, address all of the technical and procedural requirements listed above. CBFO shall resolve comments with AMWTP.

If CBFO determines that the AK is sufficient, they will inform the public of the Determination Request, the CBFO evaluation of it, and the date and time of a public meeting to provide information to and solicit comments from interested members of the public hearing regarding the Determination Request. Notice of the meeting and comment period shall be provided by the following:

1. Written notice to all individuals on the facility mailing list

2. Public notice in area newspapers, including the *Carlsbad Current-Argus*, *Albuquerque Journal*, and *Santa Fe New Mexican*

3. Notice on the WIPP home page

4. E-mail notification as specified in Permit Section 1.11.

CBFO will take written comment of the Determination Request for at least 30 days following the public meeting. CBFO will compile all comments, including any disagreement between the CBFO and commenters.

If CBFO provisionally approves the Determination Request, they may forward it along with all relevant information submitted with the Determination Request to NMED for an evaluation that the provisional approval made by the CBFO is adequate. CBFO will also provide NMED with a separate appendix to the Determination Request, the compilation of all comments, and CBFO's response to each comment. After submitting a Determination Request to NMED, the CBFO will post a link to the transmittal letter to NMED on the WIPP Home Page and inform those on the e-mail notification list as specified in Permit Section 1.11. Based on the results of NMED's evaluation, the CBFO will notify the AMWTP whether the AK information is sufficient and the Determination Request is approved. The CBFO will not approve a Determination Request that NMED has determined to be inadequate unless the AMWTP resolves the inadequacies and provides the resolution to NMED for evaluation of adequacy. Should the inadequacies not be resolved to NMED's satisfaction, the CBFO shall not submit a Determination Request for the same waste stream at a later date. CBFO shall not submit a Determination Request if a previous Determination Request is pending evaluation by NMED.

In the event CBFO disagrees, in whole or in part, with an evaluation performed by NMED resulting in a determination by NMED that CBFO's provisional approval for a particular waste stream is inadequate, CBFO may seek dispute resolution. The dispute resolution process is specified in Part 1. The Secretary's final decision under Permit Section 1.16.4 shall constitute a final agency action.

By July 1 of each year, the CBFO will submit to NMED a list of waste streams that CBFO may submit for an AK Sufficiency Determination during the upcoming federal fiscal year. The CBFO will post a link to the transmittal letter to NMED and announce a public meeting to discuss the

list with interested members of the public on the WIPP Home Page and inform those on the e-mail notification list as specified in Permit Section 1.11.

If AMWTP does not submit a Determination Request, or if the CBFO does not approve a Determination Request, or if NMED finds that the CBFO's provisional approval of a Determination Request is inadequate, the AMWTP shall perform RTR or VE on 100% of the containers in a waste stream.

If the AMWTP submits a Determination Request, CBFO provisionally approves the Determination Request and NMED finds that CBFO's provisional approval is adequate, neither radiography nor VE of the waste stream is required.

C-0c Waste Stream Profile Form Completion

After a complete AK record has been compiled and either a Determination Request has been approved by the CBFO or the AMWTP has completed, the applicable testing requirements specified in Attachments C1, AMWTP will complete a WSPF and Characterization Information Summary (CIS). The requirements for the completion of a WSPF and a CIS are specified in Attachment C3, Sections C3-6b(1) and C3-6b(2), respectively.

The WSPF and CIS for the waste stream resulting from waste characterization activities are transmitted to the CBFO, who reviews them for completeness and screens them for acceptance prior to loading any TRU mixed waste into the CH or RH packaging, as described in Section C-4. The review and approval process will ensure the submitted waste analysis information is sufficient to meet the DQOs for AK in Section C-4a(1) and allow the CBFO to demonstrate compliance with the requirements of this QAPjP. Only TRU mixed waste and TRU waste that has been characterized in accordance with the WIPP-WAP and that meets the WIPP Hazardous Waste Permit TSDF-WAC will be accepted at the WIPP facility for disposal. Upon notification of DOE's approval of the WSPF by the CBFO, the AMWTP may be authorized to ship waste to WIPP.

In the event CBFO requests detailed information on a waste stream, the AMWTP will provide a Waste Stream Characterization Package (Section C3-6b[2]). For each waste stream, this package will include the WSPF, the CIS, and the complete AK summary. The Waste Stream Characterization Package will also include specific BDRs and raw data associated with waste container characterization as requested by CBFO.

C-0d Waste Confirmation

The CBFO will perform waste confirmation on a representative subpopulation of each waste stream shipment after certification and prior to shipment pursuant to Attachment C7. The CBFO will use radiography, review of radiography audio/video recordings, VE, or review of VE records (e.g., VE data sheets or packaging logs), to examine at least 7 percent of each waste stream shipment to confirm that the waste does not contain ignitable, corrosive, or reactive waste. Waste confirmation will be performed by the CBFO prior to shipment of the waste from AMWTP to WIPP.

C-1 Identification of TRU Mixed Waste to be Managed at the WIPP Facility

C-1a Waste Stream Identification

TRU mixed waste destined for disposal at WIPP is characterized on a waste stream basis. The AMWTP delineates waste streams using AK. Required AK is specified in Section C-3a and C4.

C-1b Waste Summary Category Groups and Hazardous Waste Accepted at the WIPP Facility

Once a waste stream has been delineated, a Waste Matrix Code is assigned to the waste stream based on the physical form of the waste. Waste streams are then assigned to one of three broad Summary Category Groups: S3000-Homogeneous Solids, S4000-Soils/Gravel, and S5000-Debris Wastes. These Summary Category Groups are used to determine further characterization requirements.

The AMWTP ships only those TRU mixed waste streams which have EPA HWNs already listed in Table C-6. Some of the waste may also be identified by unique state hazardous waste codes or numbers. These wastes are acceptable at the WIPP as long as the WIPP Hazardous Waste Permit TSDF-WAC is met. The AMWTP will perform characterization of all waste streams as required by the WIPP-WAP. If during the characterization process, new EPA HWNs are identified; those wastes will not be shipped for disposal to the WIPP facility until the EPA HWN has been added to the WIPP Hazardous Waste permit and AMWTP WSPF.

C-1c Waste Prohibited at the WIPP Facility

The following TRU mixed wastes are prohibited at WIPP and therefore will not be shipped to the WIPP facility for disposal:

- Liquid waste is not acceptable at WIPP. Liquid in the quantities delineated below is acceptable.
    - Observable liquid shall be no more than 1 percent by volume of the outermost container at the time of RTR or VE.

- Internal containers with more than 60 (mL) or 3% by volume observable liquid, whichever is greater, are prohibited.

- Containers with EPA HWN U134 assigned shall have no observable liquid.

- Overpacking the outermost container that was examined during radiography or VE or redistributing untreated liquid within the container shall not be used to meet the liquid volume limits.

- Non-radionuclide pyrophoric materials, such as elemental potassium.

- Hazardous wastes not occurring as co-contaminants with TRU mixed waste (non-mixed hazardous waste).

- Wastes incompatible with backfill, seal and panel closures materials, container and packaging materials, shipping container materials, or other wastes.

- Wastes containing explosives or compressed gases.

- Wastes with PCBs not authorized under an EPA PCB waste disposal authorization.

- Wastes exhibiting the characteristic of ignitability, corrosivity, or reactivity (EPA HWNs D001, D002, or D003).

- Waste that has ever been managed as high-level waste and waste from tanks specified in Table C-5, unless specifically approved through a WIPP RCRA Permit Modification.

- Any waste container from a waste stream (or waste stream lot), which has not undergone either radiographic examination or VE of a statistically representative subpopulation of the waste stream in each shipment, pursuant to Attachment C7.

- Any waste container from a waste stream, which has not been preceded by an appropriate, certified WSPF (refer to Section C-ld of this document).

Before shipping a container holding TRU mixed waste to the WIPP facility, CBFO will perform waste confirmation activities pursuant to Attachment C7 on each waste stream shipment to confirm that the waste does not contain ignitable, corrosive, or reactive waste and the assigned EPA HWNs are allowed for storage and disposal by the WIPP RCRA Permit. Section C-4 and Attachment C7 include descriptions of the waste confirmation processes that are conducted prior to shipping waste to the WIPP facility.

Containers are vented through filters allowing any gases that are generated by radiolytic and microbial processes within a waste container to escape, thereby preventing over pressurization or development of conditions within the container that would lead to the development of ignitable, corrosive, reactive, or other characteristic wastes.

To ensure the integrity of the WIPP facility, waste streams identified to contain incompatible materials or materials incompatible with waste containers are not shipped to the WIPP until after they have been treated to remove the incompatibility. Only those waste streams that are compatible or have been treated to remove incompatibilities are shipped to the WIPP.

C-1d Control of Waste Acceptance

Every waste stream shipped to WIPP shall be preceded by a WSPF (Figure C-1) and a CIS. The required WSPF information and the CIS elements are discussed in Section C3-6(1) and Section C3-6(2).

The AMWTP provides the WSPF for each waste stream to CBFO for acceptance prior to shipping the waste (refer to MP-TRUW-8.14, *Preparation of Waste Stream Profile Forms*) to the WIPP. The WSPF and CIS will be transmitted to CBFO for each waste stream. If continued waste characterization reveals discrepancies that identify different EPA HWNs or indicates that the waste belongs to a different waste stream, the waste is redefined to a separate waste stream, and a new WSPF is submitted. The AMWTP will develop criteria to determine the specific circumstances under which a WSPF is revised, versus when a new WSPF is required. These criteria will be evaluated during site audits (Attachment C6). Any time CBFO requests additional information concerning a waste stream, the AMWTP will provide a Waste Stream Characterization Package. The option to request additional information ensures that waste being offered for disposal is adequately characterized and accurately described in the WSPF.

C-1e Waste Generating Processes at the WIPP Facility

The requirements contained in this section are specific to the WIPP facility. Therefore, these requirements have not been addressed in this document.

C-2 Waste Characterization Program Requirements and Waste Characterization Parameters

AMWTP has developed procedures which specify programmatic waste characterization requirements. CBFO evaluates the procedures during audits conducted under the CBFO Audit and Surveillance Program (Section C-5a[3]), and may also evaluate the procedures as part of the review and approval process of the WSPF. AMWTP must notify CBFO and obtain approval prior to making data-affecting modifications to procedures (Attachment C3, Section C3-9). Program procedures shall address the following minimum elements:

- Waste characterization and certification procedures for retrievably stored and newly generated wastes to be sent to the WIPP facility.
- Methods used to ensure prohibited items are documented and managed. These will include procedures for performing RTR, VE, or treatment, if these methods are used to ensure prohibited items are not present in the waste prior to shipment of the waste to WIPP.
- Identify the organizations responsible for compliance with waste characterization and certification procedures.
- Identify the oversight procedures and frequency of actions to verify compliance with waste characterization and certification procedures.
- Develop training specific to waste characterization and certification procedures.
- Ensure that personnel may stop work if noncompliance with waste characterization or certification procedures is identified.
- Develop a nonconformance process that complies with the requirements in Attachment C3 of this QAPjP to document and establish corrective actions.
- As part of the corrective action process, assess the potential time frame of the noncompliance, the potentially affected waste populations, and the reassessment and recertification of those wastes.
- A list of all approved EPA HWNs, which are acceptable at WIPP, is included in Table C-6.

For those waste streams or containers that are not amenable to RTR (e.g., RH TRU mixed waste, direct loaded ten-drum overpacks) for waste confirmation by CBFO pursuant to Attachment C7, AMWTP VE data may be used for waste acceptance. In those cases, the CBFO will review the AMWTP VE procedures to ensure that data sufficient for the CBFO's waste acceptance activities pursuant to Attachment C7 will be obtained and the procedures meet the minimum requirements for VE specified in Attachment C1, Section C1-4.

The following waste characterization parameters are obtained at the AMWTP:

- Determination whether TRU mixed waste streams comply with the applicable provisions of the WIPP Hazardous Waste Permit TSDF-WAC
- Determination whether TRU mixed wastes exhibit a hazardous characteristic (20.4.1.200 NMAC incorporating 40 CFR, §261, Subpart C)
- Determination whether TRU mixed waste are listed (20.4.1.200 NMAC incorporating 40 CFR §261, Subpart D)
- Estimation of waste material parameter weights.

Table C-1 provides the parameters of interest for the various constituent groupings and testing methodologies. The following sections provide a description of the acceptable methods to evaluate these parameters for each Summary Category Group.

C-3 Generator Waste Characterization Methods

The characterization techniques used by the AMWTP includes AK and may also include, as necessary, RTR and VE. AMWTP receives offsite DOE CH-TRU waste that may require generator requested characterization or characterization, profiling, and certification by AMWTP for disposal at WIPP. All characterization activities are performed in accordance with this QAPjP. Table C-1 provides a summary of the characterization requirements for TRU mixed waste.

C-3a Acceptable Knowledge

AK is used in TRU mixed waste characterization activities in five ways:

- To delineate TRU mixed waste streams
- To assess whether TRU mixed wastes comply with the WIPP Hazardous Waste Permit TSDF-WAC
- To assess whether TRU-mixed wastes exhibit a hazardous characteristic (20.4.1.200 NMAC, incorporating 40 CFR §261, Subpart C)
- To assess whether TRU mixed wastes are listed (20 NMAC 4.1.200, incorporating 40 CFR §261, Subpart D)
- To estimate waste material parameter weights.

AK is discussed in detail in Section C4, which outlines the minimum set of requirements and DQOs that are met by the AMWTP in order to use AK. In addition, Section C-5a(3) of this QAPjP describes the assessment of AK through the CBFO's Audit and Surveillance Program.

C-3b Radiography and Visual Examination

Radiography and VE are nondestructive qualitative and quantitative techniques used to identify and verify waste container contents as specified in Attachment C1. AMWTP performs RTR or VE on 100 percent of CH-TRU mixed waste containers in waste streams except for those waste streams for which the CBFO approves a Determination Request. No RH-TRU mixed waste will be shipped to WIPP for storage or disposal without documentation of RTR or VE of 100 percent of the containers as specified in Attachment C1.

Radiography and/or VE are used, when necessary, to examine a waste container to verify the physical form of the waste matches its waste stream description as determined by AK. These techniques can detect observable liquid in excess of TSDF-WAC limits and containerized gases, which are prohibited for WIPP disposal. The prohibition of liquid in excess of TSDF-WAC limits and containerized gases prevents the shipment of corrosive, ignitable, or reactive wastes.

Radiography and/or VE are also used to verify that the physical form of the waste matches its waste stream description (i.e., homogeneous solids, soil/gravel, or debris waste [including uncategorized metals]). If the physical form does not match the waste stream description, the waste is designated as another waste stream and assigned the preliminary EPA HWNs associated with that new waste stream assignment. That is, if RTR and/or VE indicate that the waste does not match the waste stream description arrived at by AK characterization, a nonconformance report (NCR) is completed, the inconsistency is resolved as specified in Section C4, and the NCR will be dispositioned as specified in Section C3-7 of this document. The proper waste stream assignment is determined (including preparation of a new WSPF), the correct EPA HWNs are assigned, and the resolution is documented. Refer to Attachment C4 for a discussion of AK and its verification process.

When VE is used, the detection of any liquid in non-transparent internal containers, detected from shaking the internal container, will be handled by assuming that the internal container is filled with liquid and adding this volume to the total liquid in the container being characterized using VE. The container being characterized using VE will be rejected and/or repackaged to exclude the internal container if it is over the WIPP Hazardous Waste Permit TSDF-WAC limits. When RTR is used, or VE of transparent containers is performed, if any liquid in internal containers is detected, the volume of liquid is added to the total for the container being characterized using RTR or VE.

Radiography, or the equivalent, will be used, as necessary, on the existing/stored waste containers to verify the physical characteristics of the TRU mixed waste correspond with its waste stream identification/waste stream Waste Matrix Code and to identify prohibited items.

Radiographic examination protocols and QA/QC methods are provided in Section C1. Radiography and VE shall be subjected to the CBFO's Audit and Surveillance Program (Attachment C6).

C-4 Data Verification and Quality Assurance

Data validation, usability, and reporting controls are used to ensure that the TRU mixed waste shipped to the WIPP facility for disposal meets WIPP-WAP requirements. Verification steps are taken at three levels: (1) the AMWTP data generation level, (2) the AMWTP project level, and (3) the CBFO level. The validation and verification process and requirements at each level are described in Section C3-4. The verification process at the CBFO level is also described in Section C-5.

C-4a Data Generation and Project Level Verification Requirements

C-4a(1) Data Quality Objectives

The waste characterization data obtained through implementation of the QAPjP will be used to ensure that the waste meets regulatory requirements and to ensure that TRU mixed waste is properly managed during the disposal phase. To satisfy the RCRA regulatory compliance requirements, the following DQOs are established in the WIPP-WAP:

- Acceptable Knowledge
  - To delineate TRU mixed waste streams
  - To assess whether TRU mixed wastes comply with the applicable requirements of the WIPP Hazardous Waste Permit TSDF-WAC
  - To assess whether TRU mixed wastes exhibit a hazardous characteristic (20.4.1.200 NMAC, incorporating 40 CFR §261, Subpart C)
  - To assess whether TRU mixed wastes are listed (20.4.1.200 NMAC, incorporating 40 CFR §261, Subpart D)
  - To estimate waste material parameters weights.
- Radiography and VE
  - To verify the TRU mixed waste streams contain no prohibited items and to verify the physical form of the waste matches the waste stream description as determined by AK.

Reconciliation of these DQOs by the SPM is addressed in Attachment C3. Reconciliation requires determining whether sufficient type, quality, and quantity of data have been collected to ensure the DQOs cited above can be achieved (refer to MP-TRUW-8.11, *Data Reconciliation*).

C-4a(2) Quality Assurance Objectives

The AMWTP shall demonstrate compliance with each QAO associated with the characterization methods as presented in Attachment C3. The SPM shall perform a reconciliation of the data with the DQOs established in the WIPP-WAP. The SPM shall conclude that all of the DQOs have been met for the characterization of the waste stream prior to submitting a WSPF to the WIPP facility for approval (refer to Attachment C3). The following QAO elements are considered for each technique, as a minimum:

- Precision
  - Precision is a measure of the mutual agreement among multiple measurements.
- Accuracy
  - Accuracy is the degree of agreement between a measurement result and the true or known value.
- Completeness
  - Completeness is a measure of the amount of valid data obtained from a method compared to the total amount of data obtained that is expressed as a percentage.
- Comparability
  - Comparability is the degree to which one data set can be compared to another.
- Representativeness
  - Representativeness expresses the degree to which data represent characteristics of a population.

A more detailed discussion of the QAOs, can be found in Attachment C3, which describes the QAOs associated with each test method.

C-4a(3) Data Generation

Batch Data Reports, in a format approved by the CBFO, are used by the AMWTP for reporting waste characterization data. This format is included in the AMWTP QAPjPs, as applicable, controlled electronic databases, and MP-TRUW-8.8, *Level 1 Data Validation*, which includes all of the elements required by this QAPjP for BDRs (refer to Attachment C3).

The CBFO performs audits of the AMWTP waste characterization program, as implemented by the AMWTP QAPjP, to verify compliance with the WAP and the DQOs in this QAPjP (See Attachment C6 for a discussion of the content of the audit program). The primary functions of these audits are to review AMWTP adherence to the requirements of this QAPjP and ensure adherence to the WAP characterization program. CBFO shall provide the results of the audit to NMED. If audit results indicate that the AMWTP is not in compliance with the requirements of this QAPjP, the CBFO will take appropriate action as specified in Attachment C6.

C-4a(4) Data Verification

Batch Data Reports document the testing results from the required characterization activities, and include documentation of required QA/QC activities. Data validation and verification at both the data generation level and the project level are performed before the required data are transmitted to the WIPP facility. Attachment C3 discusses the data validation process in more detail. NMED may request, through the CBFO, copies of any BDR, and/or the raw data validated by the AMWTP, to check the CBFO audit of the validation process.

C-4a(5) Data Transmittal

Batch Data Reports include information required by Section C3-4 and are transmitted by hard copy or electronically (provided a hard copy is available on demand) from the data generation level to the project level. The AMWTP transmits waste container information electronically via the Waste Data System (WDS)/WIPP Waste Information System (WWIS) in accordance with MP-TRUW-8.5, *TRU Waste Certification*. Data is entered into the WDS/WWIS in the exact format required by the database. Refer to Section C-5a(1) for WDS/WWIS reporting requirements and DOE/WIPP-09-3427, *Waste Data System User's Manual*, for WDS/WWIS data fields and format requirements.

Once a waste stream is characterized, the SPM also submits to the WIPP facility a WSPF (Figure C-1) accompanied by the CIS for the waste stream which includes reconciliation with DQOs (refer to Sections C3-6b[1] and C3-6b[2]). The WSPF, the CIS, and information from the WDS/WWIS are used as the basis for acceptance of waste characterization information on TRU mixed waste disposed at WIPP.

C-4a(6) Records Management

Records related to waste characterization activities performed by the AMWTP are maintained in the AMWTP site project files or at the WIPP Records Archive facility. Raw data obtained by testing TRU mixed waste in support of this QAPjP will be identifiable, legible, and provide documentary evidence of quality.

An electronic records system, (the equivalent of a CBFO required Records Inventory and Disposition Schedule [RIDS]) has been prepared, approved, and implemented by the AMWTP. All records relevant to an enforcement action under the WIPP Permit, regardless of disposition, are maintained at the AMWTP until NMED determines that the records are no longer needed for enforcement action. The records will then be dispositioned as specified in the approved implementing procedure. All waste characterization data and related QA/QC records for TRU mixed waste to be shipped to the WIPP facility are designated as either Lifetime Records or Non-Permanent Records. Records that are designated as Lifetime Records are maintained for the life of the AMWTP waste characterization program plus six years or transferred for permanent archival storage to the WIPP Records Archive facility.

Waste characterization records include historical characterization records (i.e., headspace gas sampling/analysis and homogeneous solids and soil/gravel sampling/analysis) generated through implementation of previous requirements in the WAP. Those waste characterization records designated as Non-Permanent Records are maintained for ten years from the date of (record) generation either at AMWTP or at the WIPP Records Archive facility and then dispositioned according to the requirements defined in MP-DOCS-18.2, *Records Management*. If the AMWTP ceases to operate, all records will be transferred before closeout for management at the WIPP Records Archive facility. Table C-3 provides a listing of records designated as Lifetime Records and Non-Permanent Records. Classified information will not be transferred to WIPP. Although the AMWTP expects no classified information, a notation will be provided to CBFO indicating the absence of classified information. The AMWTP will identify appropriate disposition of classified information. Nothing in this QAPjP is intended to, nor should it be interpreted to, require the disclosure of any DOE classified information to persons without appropriate clearance to view such information.

C-5 CBFO Level Waste Stream Screening and Verification of TRU Mixed Waste

CBFO waste screening is a two-phased process. Phase 1 occurs prior to configuring shipments of TRU mixed waste. Phase II occurs after configuration of shipments of TRU mixed waste but before it is disposed at the WIPP facility. Figure C-3 presents Phase I and a portion of Phase II of the TRU mixed waste screening process. Attachment C7 presents the TRU mixed waste confirmation portion of Phase II activities.

C-5a Phase 1 Waste Stream Screening and Verification

The first phase of the waste screening and verification process occurs before TRU mixed waste is shipped to the WIPP facility. Before CBFO begins the process of accepting TRU mixed waste from the AMWTP, an initial audit of the AMWTP is conducted as part of the CBFO Audit and Surveillance Program. The RCRA portion of the AMWTP audit provides onsite verification of characterization procedures; BDR preparation; and recordkeeping to ensure that all applicable provisions of the WAP requirements are met. Another portion of the Phase 1 verification is the WSPF approval process. At the WIPP facility, this process includes verification that all of the required elements of the WSPF and the CIS are present and that the waste characterization information meet the acceptance criteria required for compliance with this QAPjP (Section C3-6b[1]).

After the AMWTP has prepared this QAPjP, which includes applicable WAP requirements, it is submitted to CBFO for review and approval. Once approved, a copy is provided to NMED for examination. The AMWTP will implement the specific parameters of the QAPjP after it is approved. An initial audit was performed after QAPjP implementation and prior to AMWTP being certified for shipment of waste to WIPP. Additional audits, focusing on the results of waste characterization, will be performed at least annually. CBFO has the right to conduct unannounced audits and to examine any records that are related to the scope of the audit. See Section C-5a(3) and Attachment C6 for further information regarding audits.

When the required waste stream characterization data have been collected by the AMWTP and the initial AMWTP audit has been successfully completed, the SPM will verify that the waste stream characterization meets the applicable QAPjP requirements as part of the project level verification (Section C3-4b). If the waste characterization does not meet the applicable requirements of the QAPjP, the mixed waste stream cannot be shipped until those requirements are met. The SPM will then complete a WSPF and submit it to CBFO, along with the accompanying CIS for that waste stream (Section C3-6b[1]). All data necessary to check the accuracy of the WSPF will be transmitted to CBFO for verification. This provides notification that the AMWTP considers that the waste stream (identified by the waste stream identification number) has been adequately characterized for disposal prior to shipment to WIPP. The CBFO compares, radiographic and VE data obtained subsequent to submittal and approval of the WSPF (and prior to submittal) with characterization information presented on this form. If CBFO determines (through the data comparison) that the characterization information is adequate, the WSPF will be approved. Prior to the first shipment of containers from the approved waste stream, the approved WSPF and accompanying CIS is provided to the NMED. If the data comparison indicates that analyzed containers have hazardous wastes not present on the WSPF, or a different Waste Matrix Code applies, the WSPF is in error and shall be resubmitted. Ongoing WSPF examination is discussed in detail in Section C-5a(2).

Audits of AMWTP are conducted as part of the CBFO's Audit and Surveillance Program (Attachment C6). The RCRA portion of the AMWTP site audit program provides onsite

verification of waste characterization procedure; BDR preparation; and record keeping ensuring that all applicable provisions of the WIPP-WAP requirements are met. As part of the waste characterization data submittal, the AMWTP also transmits the data on a container-by-container basis via the WDS/WWIS. This data submittal can occur at any time as the data are being collected, but will be complete for each container prior to shipment of that container. The WDS/WWIS will conduct internal edit/limit checks as the data is entered and made available to CBFO as supporting information for WSPF review. The initial WSPF check performed by CBFO will include WDS/WWIS data submitted by AMWTP for each waste container submitted for the WSPF review and the CIS. The CBFO will compare ongoing characterization data obtained and submitted via the WDS/WWIS to the approved WSPF. If this comparison shows that containers have hazardous wastes not reported on the WSPF, or a different Waste Matrix Code applies, the data are rejected and the waste containers are not accepted for shipment until a new or revised WSPF is submitted to and approved by the CBFO.

If discrepancies regarding EPA HWN assignment or Waste Matrix Code designation arise as a result of the Phase 1 review, the AMWTP will be contacted and required to provide the necessary additional information to resolve the discrepancy before the waste stream is approved for disposal at the WIPP facility. If the discrepancy is not resolved, the waste stream will not be approved.

C-5a(1) WDS/WWIS Description

All generator/storage sites planning to ship TRU mixed waste to WIPP will supply the required data to the WDS/WWIS. The WDS/WWIS Data Dictionary includes all of the data fields, the field format, and the limits associated with the data as established by this QAPjP. The data will be subjected to edit and limit checks that are performed automatically by the database as defined in the Waste Data System User's Manual. (DOE 2009)

The CBFO will coordinate the data transmission with AMWTP. Actual data transmission will use appropriate technology to ensure the integrity of the data transmissions. The CBFO requires the AMWTP to populate a data structure provided by the CBFO that contains the required data dictionary fields that are appropriate for the waste streams at the site. The CBFO will access the data via the Internet to ensure an efficient transfer of this data.

CBFO uses the WDS/WWIS to verify that all supplied data meet the edit and limit checks prior to shipment of TRU mixed waste to WIPP. The WDS/WWIS notifies the AMWTP if any of the supplied data fails to meet the requirements of the edit and limit checks via an appropriate error message. The AMWTP corrects the discrepancy with the waste or the waste data and re-transmit the corrected data prior to acceptance of the data by the WDS/WWIS. CBFO will review data reported for each container of each shipment prior to providing notification to the AMWTP that the shipment is acceptable. Read-only access is provided to NMED. Table C-3 contains a listing of the data fields contained in the WDS/WWIS that is required as part of this QAPjP.

The WDS/WWIS generates a Waste Emplacement Report, Shipment Summary Report, Waste Container Data Report, and a Change Log Report.

Access to the WDS/WWIS is controlled by CBFO based on approval from management. All data formally accepted by CBFO are protected from indiscriminate change and can only be changed by an authorized Data Administrator.

C-5a(2) Examination of the Waste Stream Profile Form and Container Data Checks

CBFO verifies the completeness and accuracy of the WSPF (Section C3-6b[1]). Figure C-2 includes the waste characterization and waste stream approval process. The assignment of the waste stream description, Waste Matrix Code Group, and Summary Category Groups; the AK summary documentation; the method used for characterization; CBFO certification; and appropriate designation of EPA HWN(s) will be examined by CBFO. If the WSPF is inaccurate, efforts will be made to resolve discrepancies by contacting the AMWTP in order for the waste stream to be eligible for shipment to the WIPP facility. If discrepancies in the waste stream are detected at the AMWTP, the AMWTP will implement a nonconformance program in accordance with MP-Q&SI-5.4, *Identification of Nonconforming Conditions*, to identify, document, and report discrepancies (Attachment C3).

The WSPF will pass all verification checks by CBFO in order for the waste to be approved by CBFO for shipment to the WIPP facility. The WSPF check against waste container data will occur during the initial WSPF approval process (Section C-5a).

The EPA HWNs for the waste that appear on the WSPF will be compared to those in Table C-5 to ensure that only approved wastes are accepted for management, storage, or disposal at WIPP. Some of the waste may also be identified by unique state hazardous waste codes or numbers. These wastes are acceptable at WIPP as long as the WIPP Hazardous Waste Permit TSDF-WAC is met. The CIS will be reviewed by the CBFO to verify that the waste has been classified correctly with respect to the assigned EPA HWNs. CBFO verifies that the applicable requirements of the WIPP Hazardous Waste Permit TSDF-WAC have been met.

Waste data transferred via the WDS/WWIS after WSPF approval will be compared with the approved WSPF. Any container from an approved hazardous waste stream with a description different from its WSPF will not be managed, stored, or disposed at WIPP.

CBFO will also verify that three different types of data specified below are available for every container holding TRU mixed waste before that waste is managed, stored, or disposed at WIPP.

1. An assignment of the waste stream's waste description (by Waste Matrix Codes) and Waste Matrix Code Group;
2. A determination of ignitability, reactivity, and corrosivity; and

3. A determination of compatibility.

The verification of waste stream description will be performed by reviewing the WDS/WWIS for consistency in the waste stream description and WSPF. The CIS will indicate if the waste has been checked for the characteristics of ignitability, corrosivity, and reactivity. The final verification of waste compatibility is performed using Appendix C1 of the WIPP RCRA Part B Permit Application, the compatibility study.

Any container with unresolved discrepancies associated with hazardous waste characterization will not be managed, stored, or disposed at the WIPP facility until the discrepancies are resolved. If the discrepancies cannot be resolved, the CBFO will revoke the approval status of the waste stream, suspend shipments of the waste stream, and notify NMED. Waste stream approval will not be reinstated until the AMWTP demonstrates all corrective actions have been implemented and the AMWTP program is reassessed by CBFO.

C-5a(3) CBFO's Audit and Surveillance Program

An important part of CBFO's verification process is the CBFO's Audit and Surveillance Program. The focus of this audit program is compliance with the QAPjP and the WIPP Permit. This audit program addresses all AK implementation and testing activities, from waste stream classification assignment through waste container certification, and ensures compliance with standard operating procedures and the QAPjP. Audits will ensure that containers and their associated documentation are adequately tracked throughout the waste handling process. Operator qualifications will be verified, and implementation of QA/QC procedures will be surveyed. A final report that includes AMWTP audit results and applicable WIPP-WAP-related corrective action report (CAR) resolution will be provided to NMED for approval.

Audits will be performed at least annually, including the possibility of unannounced audits (i.e., not a regularly scheduled audit).

C-5b Phase II Waste Shipment Screening and Verification

As presented in Figure C-3, Phase II of the waste screening and verification process begins with confirmation of the waste pursuant to Attachment C7 after waste shipments are configured. After the waste shipment has arrived at WIPP, CBFO screens the shipments to determine the completeness and accuracy of the EPA Hazardous Waste Manifest and land disposal restriction notice completeness. CBFO will verify there are no waste shipment irregularities and the waste containers are in good condition. Only those waste containers that are from shipments that have been confirmed pursuant to Attachment C7 and that pass all Phase II waste screening and verification determinations will be emplaced at WIPP. For each container shipped, the AMWTP provides the following information:

Hazardous Waste Manifest Information

- Generator/storage site name and EPA ID
- Generator/storage site contact name and phone number
- Quantity of waste
- List of up to six state and/or EPA HWNs in each line item
- List of all container IDs (Shipping Package serial number)
- Signature of authorized generator representative.

Specific Waste Container Information

- Waste Stream Identification Number
- List of EPA HWNs per container
- Certification date
- Shipping data (Assembly numbers, ship date, shipping category, etc.).

This information is also supplied electronically to the WDS/WWIS. The container-specific information is supplied as described in Section C-5a(1), and is supplied prior to shipment.

C-5b(1) Examination of the EPA Uniform Hazardous Waste Manifest and Associated Waste Tracking Information

Upon receipt of a TRU mixed waste shipment, CBFO will make a determination of EPA Uniform Hazardous Waste Manifest completeness. For CH-TRU mixed waste, the CBFO will then make a determination of waste shipment completeness by checking the unique, barcode identification number found on each container holding TRU mixed waste against the WDS/WWIS database after opening the Shipping Package.

For shipments in the RH-TRU 72B cask, the identification number of the single payload container is read during cask-to-cask transfer in the Transfer Cell and then checked against the WDS/WWIS database. For shipments in the CNS 10-160B cask, CBFO will make a determination of waste shipment completeness by checking the unique identification number found on each container holding TRU mixed waste in the Hot Cell against the WDS/WWIS database after unloading the cask.

Manifest discrepancies may be identified during manifest examination and container barcode WDS/WWIS data comparison. A manifest discrepancy is a difference between the quantity or type of hazardous waste designated on the manifest and the quantity or type of hazardous waste the WIPP facility actually receives. The AMWTP technical contact (as listed on the manifest) will be contacted to resolve the discrepancy. Errors on the manifest can be corrected by the WIPP facility with a verbal (followed by a mandatory written) concurrence by the AMWTP technical contact. All discrepancies that are unresolved within fifteen days of receiving the waste at the WIPP facility will be immediately reported to the NMED in writing by CBFO. If the manifest discrepancies have not been resolved within thirty days of waste receipt, the shipment will be returned to the AMWTP.

C-5b(2) Examination of the Land Disposal Restriction Notice

With the initial shipment of a TRU mixed waste stream, AMWTP will provide WIPP with a notice that the waste is not prohibited from land disposal (The Land Disposal Restriction [LDR] Notice). The Notice will be prepared per the requirements of 20 NMAC 4.1.800 (incorporating 40 CFR 268.7[a][4]). The LDR Notice information includes:

- EPA HWN(s) and manifest number of first shipment of a mixed waste stream
- Date the waste is subject to prohibition
- Statement that the waste is not prohibited from land disposal at WIPP.

This information is the applicable information taken from column "268.7(a)(4)" of the "Generator Paperwork Requirements Table" in 20.4.1.800 NMAC (incorporating 40 CFR 268.7[a][4]). Note that item "5" from the "Generator Paperwork Requirements Table" is not applicable since waste analysis data are provided electronically via WDS/WWIS and item "7" is not applicable, since waste designated by the Secretary of Energy for disposal at WIPP is exempted from the treatment standards.

CBFO will review the LDR notice for accuracy and completeness. The AMWTP will prepare this notice in accordance with the applicable requirements of 20.4.1.800 NMAC (incorporating 40 CFR 268.7[a][4]).

C-5b(3) Verification

This is a CBFO function.

C-6 CBFO's Waste Shipment Screening QA/QC

This is a CBFO function.

C-7 Records Management and Reporting

As part of the WIPP facility's operating record, data and documents associated with waste characterization and waste confirmation activity records are managed in accordance with MP-DOCS-18.2.

The storage of the AMWTP's copy of the manifest, LDR information, waste characterization data, WSPFs, waste confirmation activity records, and other related records are identified on an electronic records system, (the equivalent of a CBFO-required RIDS).

C-7a General Requirements

- Records are legible.
- Corrections are made with a single line through the incorrect information, and the date and initial of the person making the correction are added.
- Black ink is encouraged, unless a copy test has been conducted to ensure the other color ink will copy.
- Use of highlighters on records is discouraged.
- Records are reviewed for completeness.
- Records are validated by the cognizant manager or designee.

C-7b Records Storage

- Active records are stored when not in use
- Quality records are kept in one-hour (certified) fire-rated container or a copy of a record is stored separately (sufficiently remote from the original) in order to prevent destruction of both copies as a result of a single event such as fire or natural disaster
- Unauthorized access to the records is controlled by locking the storage container or controlling personnel access to the storage area.

C-8 Reporting

This is a CBFO function.

Table C-1. Summary of Characterization Requirements for Transuranic Mixed Waste[a].

PARAMETER	TECHNIQUES AND PROCEDURE	SITE-SPECIFIC DATA COLLECTION PROCEDURES	SITE-SPECIFIC DATA RELEASE PROCEDURES
Physical Waste Form Summary Category Names S3000 Homogeneous Solid S4000 Soil/Gravel S5000 Debris Waste	**RTR/Visual Examination** **Acceptable Knowledge**	**RTR/Visual Examination** (Refer to Section C1-1, C1-2 and Section C3-2) INST-OI-12, *Real-Time Radiography Operations (Drum)* INST-OI-34, *Non-Facility Visual Examination Operations* INST-FOI-17, *Facility Visual Examination Operations* INST-FOI-20, *Supercompactor and Post-Compaction Operations* **Acceptable Knowledge** (Refer to Section C3-3, C4) MP-TRUW-8.13, *Collection, Review, and Management of Acceptable Knowledge Documentation*	**RTR/Visual Examination** MP-TRUW-8.8, *Level I Data Validation* MP-TRUW-8.9, *Level II Data Validation* **Acceptable Knowledge** MP-TRUW-8.11, *Data Reconciliation* MP-TRUW-8.13, *Collection, Review, and Management of Acceptable Knowledge Documentation* MP-TRUW-8.14, *Preparation of Waste Stream Profile Forms*

a. Permit Attachment C

Table C-2. Summary of Parameters, Characterization Methods, and Rationale for Transuranic Waste.

WASTE MATRIX CODE SUMMARY CATEGORIES	WASTE MATRIX CODE GROUPS	CHARACTERIZATION PARAMETER	METHOD	RATIONALE
S3000-Homogeneous Solids	• Solidified inorganics • Salt waste • Solidified organics	Physical waste form Hazardous constituents • Listed • Characteristic	Acceptable Knowledge, Radiography, and/or Visual Examination	• Determine waste matrix • Demonstrate compliance with waste acceptance criteria (e.g., no liquid in excess of TSDF-WAC limits, no incompatible wastes, no compressed gases) • Determine assignment of EPA HWNs
S4000-Soil/Gravel	Contaminated soil/debris			
S5000-Debris Waste	• Uncategorized metal (metal waste other than lead/cadmium) • Lead/cadmium waste • Inorganic nonmetal waste • Combustible waste • Graphite waste • Heterogeneous debris waste • Composite filter waste			

Table C-3. Required Program Records Maintained in AMWTP Project Files.

LIFETIME RECORDS
• Field sampling data forms • Field and laboratory COC forms • Test facility and laboratory batch data reports • Waste Stream Characterization Package • Sampling plans • Data reduction, validation, and reporting documentation • AK documentation • Waste Stream Profile Form and Characterization Information Summary
NON-PERMANENT RECORDS
• Nonconformance documentation • Variance documentation • Assessment documentation • Gas canister tags • Methods performance documentation • PDP documentation • Sampling equipment certifications • Calculations and related software documentation • Training/qualification documentation • QAPjPs (generator/storage sites) documentation (all revisions) • Calibration documentation • Analytical raw data • Procurement documentation • QA procedures (all revisions) • Technical implementing procedures (all revisions) • Audio/video recording (radiography, visual, etc.)

Table C-4. Waste Data System/WIPP Waste Information System Data Fields[a].

CHARACTERIZATION MODULE DATA FIELDS [b]	
Container ID [c]	Transporter EPA ID
Generator EPA ID	Transporter Name
Generator Address	Visual Exam Container [e]
Generator Name	Waste Material Parameter [d]
Generator Contact	Waste Material Weight [d]
Hazardous Code	Waste Matrix Code
Layers of Packaging	Waste Matrix Code Group
Liner Exists	Waste Stream Profile Number
Liner Hole Size	
Filter Model	
Number of Filters Installed	
Item Description Code	
Haz. Manifest Number	
NDE Complete [e]	
CERTIFICATION MODULE DATA FIELDS	
Container ID [c]	Handling Code
Container type	
Container Weight	
Contact Dose Rate	
Container Certification date	
Container Closure Date	
TRANSPORTATION MODULE DATA	
Contact Handled Package Number	Ship Date
Assembly Number [f]	Receive Date
Container IDs [c, d]	
Inner Containment Vessel Closure Date	
DISPOSAL MODULE DATA	
Container ID [c]	
Disposal Date	
Disposal Location	

a. This is not a complete list of the WDS/WWIS data fields.
b. Some of the fields required for characterization are also required for certification and/or transportation.
c. Container ID is the main relational field in the WDS/WWIS Database.
d. This is a multiple occurring field for each waste material parameter, nuclide, etc.
e. These are logical fields requiring only a yes/no.
f. Required for 7 packs of 55-gal. drums, 4-packs of 85-gal drums, or 3-packs of 100-gal drums to tie all of the drums in that assembly together. This facilitates the identification of waste containers in a shipment without need to break up the assembly.

Table C-5. Waste Tanks Subject to Exclusion.

Hanford Site – 177 Tanks	
A-101 through A-106	C-201 through C-204
AN-101 through AN-107	S-101 through S-112
AP-101 through AP-108	SX-101 through SX-115
AW-101 through AW-106	SY-101 through SY-103
AX-101 through AX-104	T-101 through T-112
AY-101 through AY-102	T-201 through T-204
B-101 through B-112	TX-101 through TX-118
B-201 through B-204	TY-101 through TY-106
BX-101 through BX-112	U-101 through U-112
BY-101 through BY-112	U-201 through U-204
C-101 through C-112	
Savannah River Site – 51 Tanks	
Tank 1 through 51	
Idaho National Laboratory – 15 Tanks	
WM-103 through WM-106	WM-180 through 190

Table C-6. Listing of Permitted EPA Hazardous Waste Numbers.

EPA Hazardous Waste Numbers			
F001	D019	D043	U079
F002	D021	P015	U103
F003	D022	P030	U105
F004	D026	P098	U108
F005	D027	P099	U122
F006	D028	P106	U133*
F007	D029	P120	U134*
F009	D030	U002*	U151
D004	D032	U003*	U154*
D005	D033	U019*	U159*
D006	D034	U037	U196
D007	D035	U043	U209
D008	D036	U044	U210
D009	D037	U052	U220
D010	D038	U070	U226
D011	D039	U072	U228
D018	D040	U078	U239*

* Acceptance of U-numbered wastes listed for reactivity, ignitability, or corrosivity characteristics is contingent upon a demonstration that the wastes no longer exhibit the characteristic of reactivity, ignitability, or corrosivity.

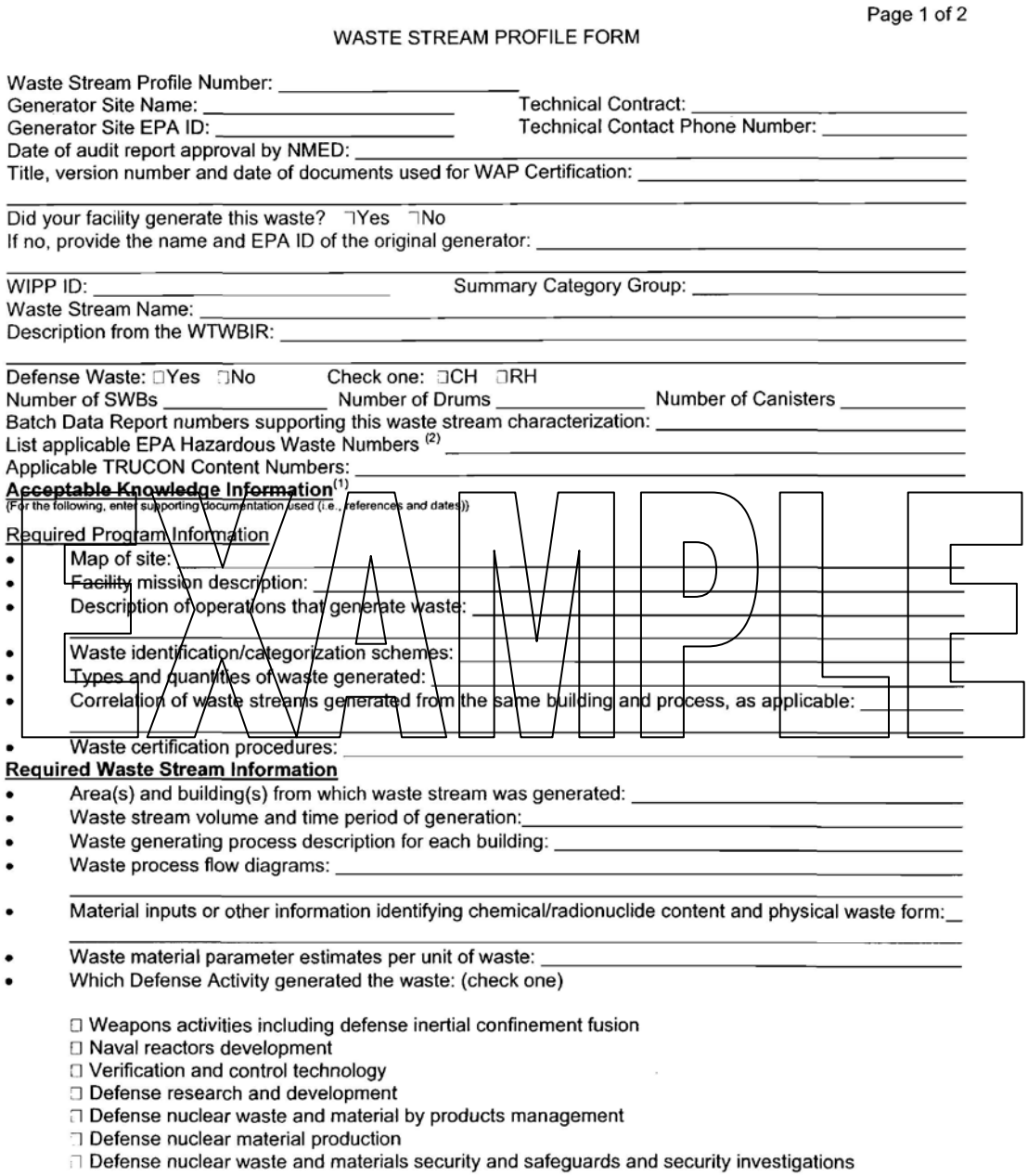

Page 1 of 2

WASTE STREAM PROFILE FORM

Waste Stream Profile Number: _____
Generator Site Name: _____ Technical Contract: _____
Generator Site EPA ID: _____ Technical Contact Phone Number: _____
Date of audit report approval by NMED: _____
Title, version number and date of documents used for WAP Certification: _____
_____
Did your facility generate this waste? ☐Yes ☐No
If no, provide the name and EPA ID of the original generator: _____
_____
WIPP ID: _____ Summary Category Group: _____
Waste Stream Name: _____
Description from the WTWBIR: _____
_____
Defense Waste: ☐Yes ☐No Check one: ☐CH ☐RH
Number of SWBs _____ Number of Drums _____ Number of Canisters _____
Batch Data Report numbers supporting this waste stream characterization: _____
List applicable EPA Hazardous Waste Numbers (2) _____
Applicable TRUCON Content Numbers: _____
Acceptable Knowledge Information(1)
(For the following, enter supporting documentation used (i.e., references and dates))

Required Program Information

- Map of site: _____
- Facility mission description: _____
- Description of operations that generate waste: _____
- Waste identification/categorization schemes: _____
- Types and quantities of waste generated: _____
- Correlation of waste streams generated from the same building and process, as applicable: _____
- Waste certification procedures: _____

Required Waste Stream Information

- Area(s) and building(s) from which waste stream was generated: _____
- Waste stream volume and time period of generation: _____
- Waste generating process description for each building: _____
- Waste process flow diagrams: _____
- Material inputs or other information identifying chemical/radionuclide content and physical waste form: _____
- Waste material parameter estimates per unit of waste: _____
- Which Defense Activity generated the waste: (check one)

☐ Weapons activities including defense inertial confinement fusion
☐ Naval reactors development
☐ Verification and control technology
☐ Defense research and development
☐ Defense nuclear waste and material by products management
☐ Defense nuclear material production
☐ Defense nuclear waste and materials security and safeguards and security investigations

EXAMPLE

Figure B-1 (Example Only)
WASTE STREAM PROFILE FORM

Figure C-1.WIPP waste stream profile form (example only).

WASTE STREAM PROFILE FORM

Supplemental Documentation
Process design documents: _____
Standard operating procedures: _____
Safety Analysis Reports: _____
Waste packaging logs: _____
Test plans/research project reports: _____
Site data bases: _____
Information from site personnel: _____
Standard industry documents: _____
Previous analytical data: _____
Material safety data sheets: _____
Sampling and analysis data from comparable/surrogate waste: _____
Laboratory notebooks: _____

Confirmation Information(2)
(For the following, when applicable, enter procedure title(s), number(s), and date(s))

Radiography: _____

Visual Examination: _____

Waste Stream Profile Form Certification

I hereby certify that I have reviewed the information in this Waste Stream Profile Form, and it is complete and accurate to the best of my knowledge. I understand that this information will be made available to regulatory agencies and that there are significant penalties for submitting false information, including the possibility of fines and imprisonment for knowing violations.

_____	_____	_____
Signature of Site Project Manager	Printed Name and Title	Date

NOTE: (1) Use back of sheet or continuation sheets, if required.

(2) If, radiography, visual examination were used to confirm EPA Hazardous Waste Numbers, attach signed Characterization Information Summary documenting this determination.

Figure B-1 (Example Only) (Continued)
WASTE STREAM PROFILE FORM

Figure C-1. (continued)

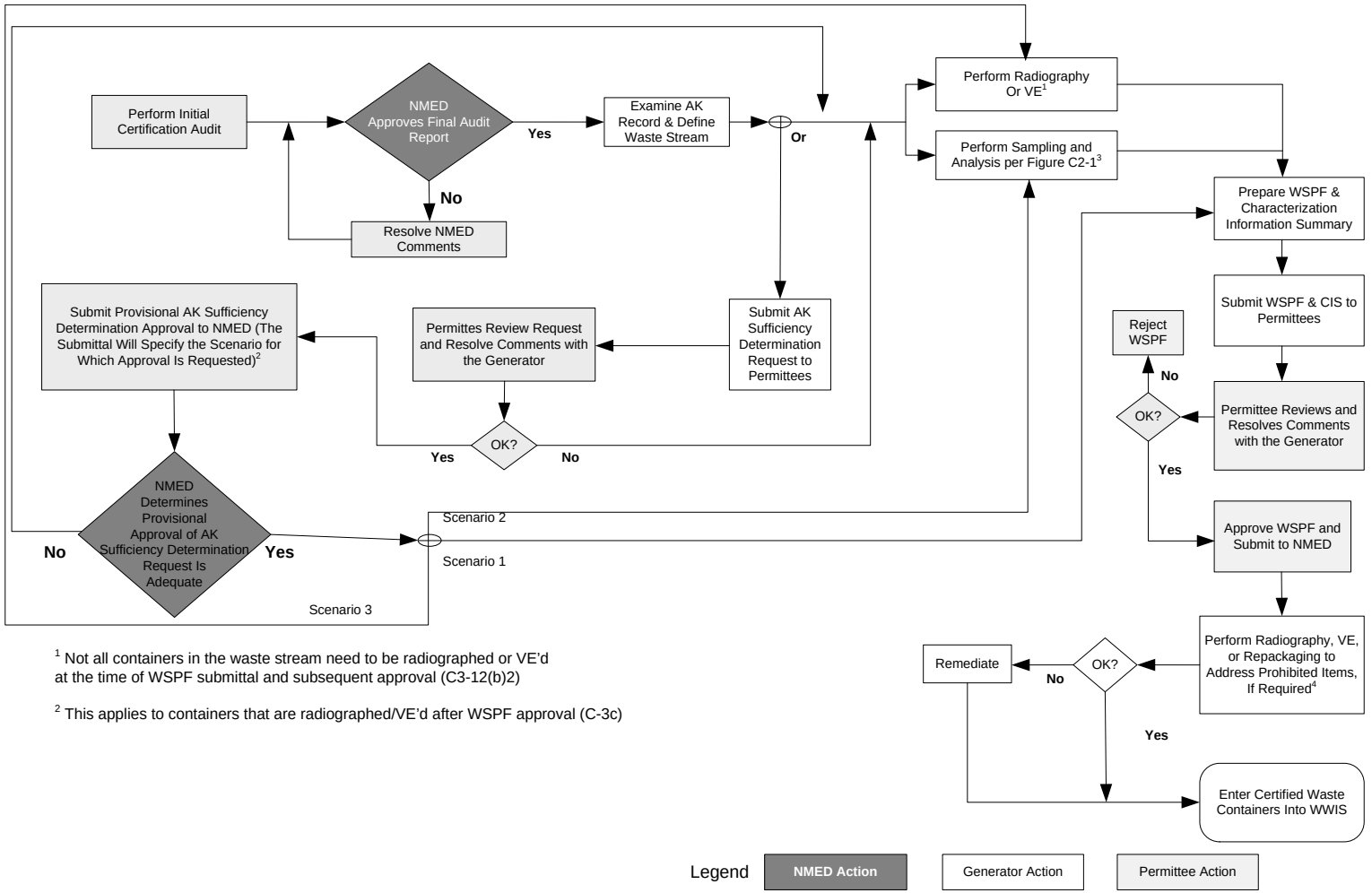

Figure C-2. Waste characterization process.

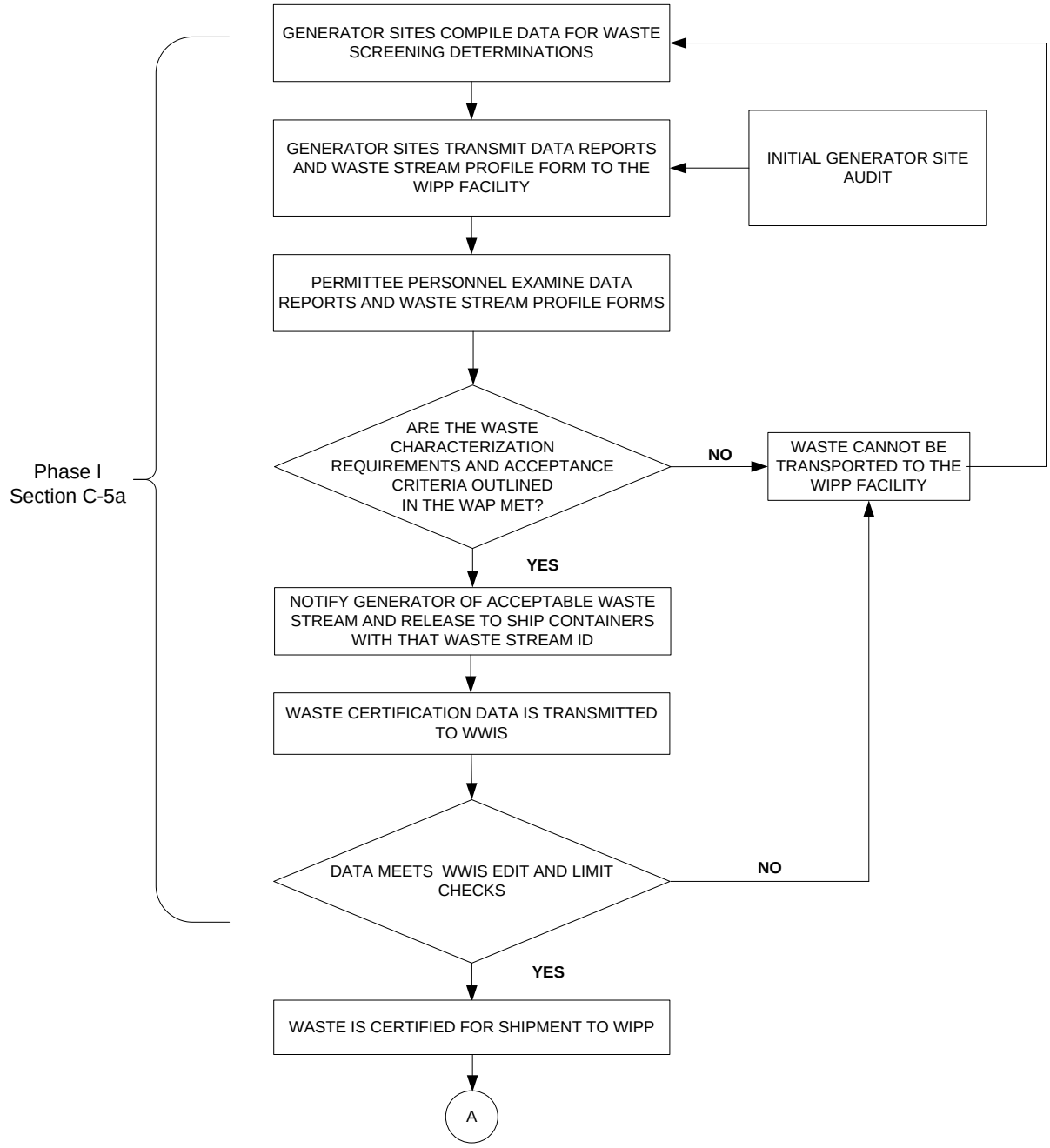

Figure C-3. TRU mixed waste screening and verification flow diagram.

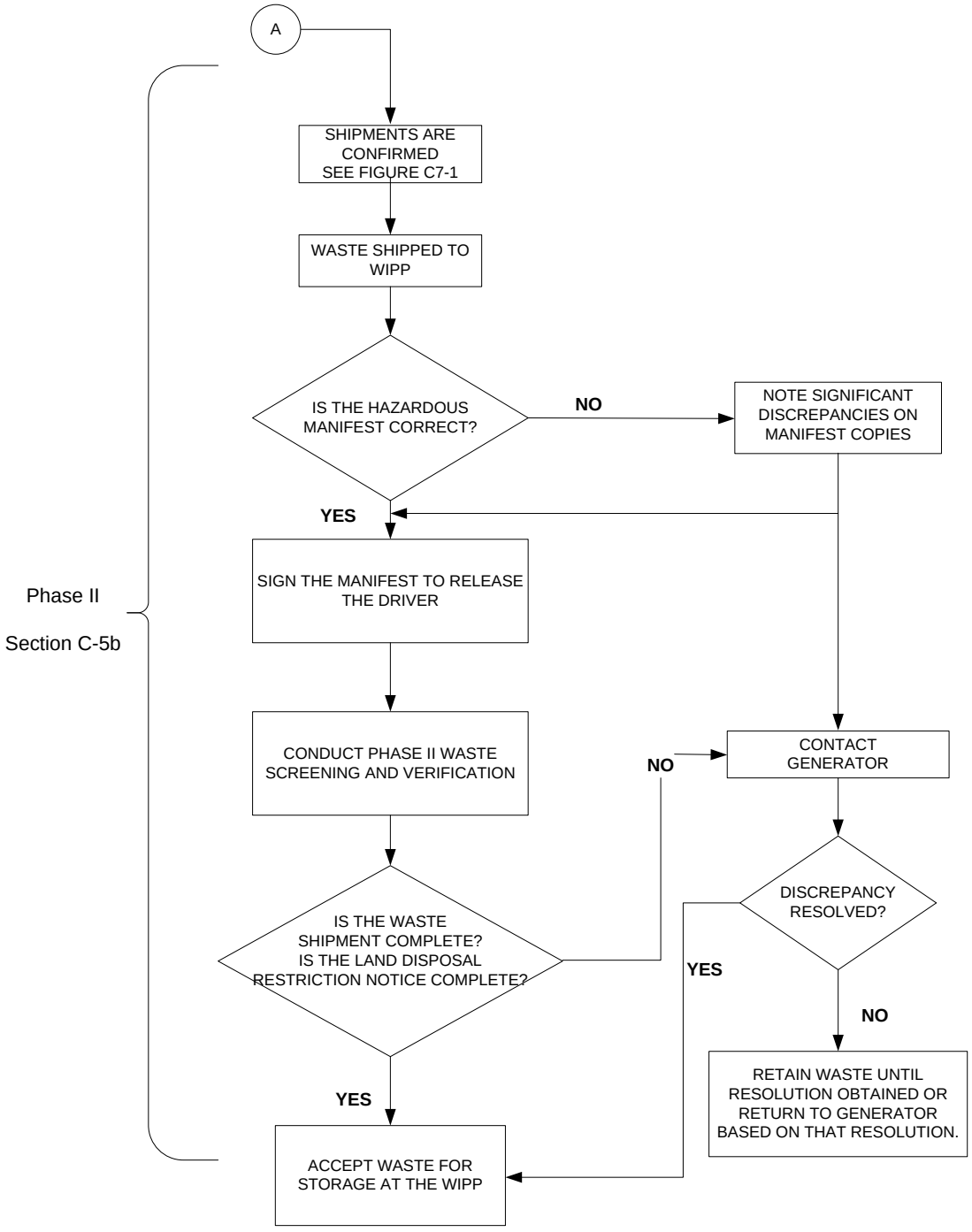

Figure C-3. (continued)

Attachment C1.
Waste Characterization Testing Methods

Introduction

The CBFO requires the AMWTP to use the following testing methods, as applicable, for characterization of TRU mixed waste which is managed, stored, or disposed at WIPP. These methods include requirements for radiography and visual examination. Additionally, this attachment provides quality control requirements.

C1-1 Radiography

Radiography has been developed to aid in the examination and identification of containerized waste. INST-OI-12 describes all activities required to achieve the radiography objectives in this QAPjP. INST-OI-12 provides instructions specific to the radiography systems used at the site. For example, to detect liquids, some systems require the container to be rotated back and forth while other systems require the container to be tilted.

A radiography system (e.g., RTR digital, digital radiography/computed tomography) normally consists of an X-ray producing device, an imaging system, an enclosure for radiation protection, a waste container handling system, an audio/video recording system, and an operator control and data acquisition station. Although these six components are required, it is expected there will be some variation within a given component between sites. The RTR system has controls or an equivalent process, which allow the operator to control image quality. On some radiography systems, it should be possible to vary the voltage, typically between 150 and 400 kilovolts to provide an optimum degree of penetration through the waste. The imaging system typically uses either a fluorescent screen or a low-light television camera or x-ray detectors to generate the image.

To perform RTR, the waste container is scanned while the operator views the television screen. A video and audio recording is made of the waste container scan and is maintained as a non-permanent record. A radiography data form is also used to document the Waste Matrix Code, to ensure that the waste container contains no ignitable, corrosive, or reactive waste by documenting the absence of liquids in excess of WIPP Hazardous Waste Permit TSDF-WAC limits or compressed gases, and verify that the physical form of the waste is consistent with the waste stream description documented in the AK summary. Containers whose contents prevent full examination of the remaining contents shall be subject to VE unless the AMWTP certifies that VE would provide no additional relevant information for that container based on the AK information for the waste stream. Such certification will be documented in the AMWTP record.

For containers which contain classified shapes and undergo RTR, the RTR video and audio recording will be considered classified. The radiography data forms will not contain classified information.

The RTR system involves qualitative and semiquantitive evaluations of visual displays. Operator training and experience are the most important considerations for ensuring QCs in regard to the operation of the RTR system and for interpretation and disposition of radiography results. Only trained personnel are allowed to operate RTR equipment.

Standardized training requirements for RTR operators are based upon existing industry standard training requirements as detailed in the RTR qualification package in accordance with MP-RTQP-14.4, *Personnel Qualification and Certification*.

The AMWTP has developed a training program that provides RTR operators with both formal and on-the-job training (OJT). Radiography operators are instructed in the specific waste generating practices, typical packaging configurations, and associated waste material parameters expected to be found in each Waste Matrix Code at the site. The OJT and apprenticeship is conducted by an experienced, qualified RTR operator prior to qualification of the training candidate. Radiography operators are trained on the types of waste that are generated, stored, and characterized at the AMWTP. All of the radiography QC requirements specified in the WIPP-WAP are incorporated into the AMWTP training program and RTR operations to ensure data quality and comparability.

Radiography training programs are subject to the CBFO Audit and Surveillance Program.

One or more training containers with items (including prohibited items) common to the waste streams to be characterized and internal containers of various sizes are scanned semiannually by each operator. The audio and video media is then reviewed by a supervisor to ensure that operator’s interpretations remain consistent and accurate. Imaging system characteristic are verified on a routine basis.

Independent replicate scans and replicate observations of the video output of the RTR process are performed under uniform conditions and procedures. Independent replicate scans are performed on one waste container per day or once per testing batch, whichever is less frequent, by a qualified radiography operator that was not involved in the original scan of the waste container. Independent observation of one scan (not the replicate scan) are also made once per day or once per testing batch, whichever is less frequent, by a qualified RTR operator that was not involved in the original scan of the waste container. A testing batch is a suite of waste containers undergoing RTR using the same testing equipment. A testing batch can be up to 20 waste containers without regard to waste matrix.

Oversight functions include periodic audio/video media reviews of accepted waste containers and shall be performed by qualified RTR operators that were not involved in the original scan of the waste containers. The results of this independent verification are available to the RTR operators who performed the original scans. The AMWTP SPM is responsible for monitoring the quality of the RTR data and calling for corrective action, when necessary.

C1-2 Visual Examination

The waste container contents may be verified directly by performing VE on the waste container contents. VE may be performed by physically examining the contents of waste containers to verify the Waste Matrix Code and to verify that the container is properly included in the appropriate waste stream.

VE is conducted on a waste container to identify and describe all waste items, packaging materials, and waste material parameters in the waste container.

VE activities are documented on video/audio media, or by using a second operator to provide additional verification by reviewing the contents of the waste container to ensure correct reporting as specified in INST-OI-34 and INST-FOI-17. When VE is performed using a second operator, each operator performing the VE will observe for themselves the waste being placed in the waste container or the contents within the examined waste container when waste is not removed. The results of all VE are documented on manual VE data forms or electronically in the Waste Tracking System (WTS) which are used to document the Waste Matrix Code, ensure that the waste container contains no ignitable, corrosive, or reactive waste by documenting the absence of liquids in excess of TSDF-WAC limits or compressed gases, and verify that the physical form of the waste is consistent with the waste stream description documented in the AK summary.

VE recorded on video/audio media shall meet the following minimum requirements:

- The video/audio media shall record the waste packaging event for the container such that all waste items placed into the container are recorded in sufficient detail and contain an inventory of waste items in sufficient detail that another trained VE operator can identify the associated waste material parameters.

- The video/audio media shall capture the waste container identification number.

- The personnel loading the waste container shall be identified on the video/audio media or on packaging records traceable to the loading of the waste container.

- The date of loading of the waste container will be recorded on the video/audio media or on packaging records traceable to the loading of the waste container.

VE performed using two generator site personnel shall meet the following minimum requirements:

- At least two generator site personnel who witnessed the packaging of the waste shall approve the data forms or packaging records attesting to the contents of the waste container.
- The data forms or packaging records shall contain an inventory of waste items in sufficient detail that another trained VE operator can identify the associated waste material parameters.
- The waste container identification number shall be recorded on the data forms or packaging records.

Although the AMWTP does not expect classified materials, VE video/audio media of containers which contain classified shapes are considered classified information. VE data forms or packaging records will not contain classified information.

Waste container packaging records may be used to meet the VE DQOs in Section C-4a(1). These records must meet the minimum requirements listed above for either VE recorded on video/audio media or VE performed by two operators, and shall be reviewed by operators trained and qualified to the requirements listed below. The operators will prepare data forms based on the VE records. Visual examination BDRs will be prepared, reviewed, and approved as described in Section C-4, and Attachment C-3.

Standardized training for VE has been developed. Personnel performing VE are instructed in the specific waste generating processes, typical packaging configurations, and the waste material parameters expected to be found in each Waste Matrix Code at the AMWTP. The training is site specific to include the various waste configurations at the AMWTP. For example, the particular physical forms and packaging configurations vary so operators are trained to examine the types of waste that are generated, stored, and characterized at the site. Training will include the following regardless of Summary Category Group:

- Identifying and describing the contents of a waste container by examining all items in waste containers of previously packaged waste
- Identifying when VE cannot be used to meet the DQOs.

VE personnel are requalified once every two years in accordance with MP-RTQP-14.4.

The AMWTP designates visual examination experts (VEE). The VEE will be familiar with the waste generating processes that have taken place at the AMWTP and will also be familiar with all types of waste being characterized at the AMWTP. The VEE is responsible for the overall direction and implementation of the VE at the AMWTP. The VEE is selected based on experience and training in the types of waste being characterized. The VEE will receive training in the same elements as the VE personnel with both formal training and OJT. Qualification of a VEE is based on familiarity with waste

generating processes, familiarity with the types of waste being characterized, and meeting the training requirements discussed above. The SPM evaluates personnel, using the above criteria, and designates VEEs accordingly. Consistent with other VE personnel, the VEE will be requalified once every two years. VEE training requirements are detailed in the VEE qualification package in accordance with MP-RTQP-14.4.

Attachment C2.
Reserved

Attachment C3.
Quality Assurance Objectives and Data Validation Techniques for Waste Characterization Methods

C3-1 Validation Methods

Validation of all data is performed so that data used for WIPP compliance activities are of known and acceptable quality.

The qualitative data or descriptive information generated by RTR and VE is not amenable to statistical data quality analysis. However, RTR and VE are complementary techniques yielding similar data to determine the waste matrix code. The waste matrix code is determined to ensure the container is properly included in the appropriate waste stream.

Data validation will be used to assess the quality of waste characterization data collected based upon project precision, accuracy, completeness, comparability, and representativeness objectives described below:

Precision

Precision is a measure of the mutual agreement among multiple measurements.

Accuracy

Accuracy is the degree of agreement between a measured result and the true or known value.

Completeness

Completeness is a measure of the amount of valid data obtained from a method compared to the total amount of data obtained.

Comparability

Comparability is the degree to which one data set can be compared to another.

Representativeness

Representativeness is the degree to which data represent a characteristic of a population.

C3-2 Non-Destructive Examination Methods

Quality Assurance Objectives

The QAOs for non-destructive examination (NDE) are detailed in this section. NDE can be either RTR or VE. In the event QAOs are not met, then corrective action is taken in accordance with MP-Q&SI-5.4. It should be noted that NDE is primarily a qualitative determination. The objective of NDE is to verify the physical form of the waste matches the waste stream description as determined by AK and the absence of prohibited items.

C3-2a Radiography

Data to meet these objectives are obtained from a video and audio recorded scan provided by trained and qualified RTR operators. Results are also recorded on a radiography data form. The precision, accuracy, completeness, and comparability objectives for RTR data are presented below.

Precision

Precision is maintained by reconciling any discrepancies between two RTR operators with regard to identification of the waste matrix code, liquids in excess of TSDF-WAC limits, and compressed gases through independent replicate scans and independent observations.

Additionally, the precision of RTR is verified prior to use by tuning precisely enough to demonstrate compliance with QAOs through viewing an image test pattern.

Accuracy

Accuracy is obtained by using a target to tune the image for maximum sharpness and by requiring operators to successfully identify 100 percent of the items required to meet the DQOs for radiography specified in Section C-4a(1) in a training container during their initial qualifications and subsequent requalification.

Completeness

A video and audio media recording of the RTR examination and a validated radiography data form is obtained for 100 percent of the waste containers subject to RTR. All video and audio recording and radiography data forms are subject to validation as indicated in Sections C3-4.

Comparability

The comparability of RTR data from different operators is enhanced by using standardized RTR procedures and operator qualification. Operator training requirements are detailed in the RTR qualification package in accordance with MP-RTQP-14.4.

C3-2b Visual Examination

Results are recorded on a VE data form. The precision, accuracy, completeness, and comparability objectives for VE data are presented below.

Precision

Precision is maintained by reconciling any discrepancies between the operator and the independent technical reviewer (ITR) with regard to identification of the waste matrix code, liquids in excess of TSDF-WAC limits, and compressed gases.

Accuracy

Accuracy is maintained by requiring operators to pass a comprehensive examination and demonstrate satisfactory performance in the presence of the VEE during their initial qualification. VE operators shall be requalified every two years.

Completeness

A validated VE data form is obtained for 100 percent of the waste containers subject to VE.

Comparability

The comparability of VE data from different operators is enhanced by using standardized VE procedures and operator qualification. Operator training requirements are detailed in the VE qualification package in accordance with MP-RTQP-14.4.

C3-3 Acceptable Knowledge

AK documentation provides primarily qualitative information that cannot be assessed according to specific data quality goals used for quantitative techniques. To ensure the AK process is consistently applied, the AMWTP complies with the following data quality requirements for AK documentation:

- *Precision* - The qualitative determinations, such as compiling and assessing AK documentation, do not lend themselves to statistical evaluations of precision. However, the AK information is addressed by the independent review of AK information during internal and external audits.

- *Accuracy* - The percentage of waste containers that require reassignment to a new waste matrix code and/or designation of different EPA HWNs based on testing data and discrepancies identified by the CBFO during waste confirmation are reported as a measure of AK accuracy.

- *Completeness* - The AK record must contain 100 percent of the required information (Section C4-3). The usability of AK information is assessed for completeness during audits.

- *Comparability* - Comparability is ensured through sites meeting the training requirements and complying with the minimum standards outlined for procedures that are used to implement the AK process. Assignment of EPA HWNs will be made in accordance with Section C4-3b. This information will be provided to other sites that store or generate a similar waste stream.

- *Representativeness* - Representativeness is a qualitative parameter that will be satisfied by ensuring the process of obtaining, evaluating, and documenting AK information is performed in accordance with the minimum standards established in Attachment C4. The AMWTP also assesses and documents the limitations of the AK information used to assign EPA HWNs (for example, purpose and scope of information, date of publication, type and extent to which waste parameters are addressed).

The AMWTP complies with the nonconformance notification and reporting requirements of Section C3-7 if the results of testing specified in Attachment C are inconsistent with AK documentation.

The AMWTP addresses QC by tracking its performance with regard to the use of AK by: (1) assessing the frequency of inconsistencies among information, and (2) documenting AK inconsistencies identified through RTR and VE. In addition, the AK process and waste stream documentation are evaluated through internal assessments by QA organizations and assessments by auditors external to the organization.

C3-4 Data Review, Validation, and Verification Requirements

Procedures have been developed for the review, validation, and verification of data at the data generation level and the validation and verification of data at the project level. Data review determines if raw data is properly collected and ensures raw data are properly reduced. Data validation verifies that the data reported satisfies the requirements of the WIPP-WAP and is accompanied by signature release. Data verification authenticates that data as presented represent the testing activities as performed and have been subject to the appropriate levels of data review. These requirements ensure that QAPjP records furnish documentary evidence of quality.

Data are collected by the operator, entered into the WTS (automated or key entry), signed electronically, and promoted for data generation level review and validation. The data are progressively reviewed (on a batch basis) at the data generation level using paper/electronic data validation checklists. The reviews are performed in the sequence specified. If data are approved, the data are manually/automatically promoted to the next reviewer. If the data are rejected, the data are manually/automatically demoted to the data generator for problem resolution.

The following BDRs are used for data validation, verification, and QA activities:

- A Testing BDR or equivalent includes all data pertaining to RTR or VE for up to 20 waste containers without regard to waste matrix. Table C3-3 lists all of the information required in Testing BDRs (identified with an "X") and other information that is necessary for data validation, but is optional in Testing Batch Data Reports (identified with an "O").

C3-4a Data Generation Level

The following are the minimum requirements for raw data collection and management:

- All raw data are signed and dated in reproducible ink by the person generating it. Alternately, unalterable electronic signatures are used.
- All data are recorded clearly, legibly, and accurately in the field records.
- Any changes to original data are lined out, initialed, and dated by the individual making the change. A justification for changing the original data is also included. The original data are not obliterated or otherwise disfigured so as not to be readable. Data changes are made by the individual who originally collected the data or an individual authorized to change the data.
- All data are transferred and reduced from field records completely and accurately.
- All field records are maintained as specified in Table C-2.
- Data are organized into a standard format for reporting purposes (BDR), as outlined in specific testing procedures.
- All electronic and video data must be stored appropriately to ensure that waste container and associated QC data are readily retrievable. In the case of classified information, additional security provisions may apply that could restrict retrievability. The additional security provision will be documented in site procedures as outlined in the QAPjP in accordance with prevailing classified information security standards. AMWTP does not anticipate dealing with classified information, so no procedures have been developed.

Data review, validation, and verification at this level involve scrutiny and signature release from qualified independent technical reviewer(s) not involved in the generation or recording of the data under review, as specified below. Individuals conducting this data review, validation, and verification must use checklists that address all items included in this section. Completed checklists must be forwarded with Batch Data Reports to the project level.

C3-4a(1) Independent Technical Review

The ITR ensures by review of raw data that data generation and reduction are technically correct; calculations are verified correct; deviations are documented; and QA/QC results are complete, documented correctly, and compared against WIPP-WAP criteria. This review validates and verifies the work done by the originator.

One hundred percent of the BDRs receive an ITR. This review is performed by a trained and qualified individual who was not involved in the generation or recording of the data under review. This review shall be performed by an individual other than the data generator who is qualified to have performed the initial work. This review is performed as soon as practicably possible to determine and correct negative quality trends in the testing process. However, at a minimum, the ITR is performed before any waste associated with data is shipped to WIPP. The reviewers release the data as evidenced by signature, and as a consequence ensure the following:

- Data generation and reduction were conducted in a technically correct manner per the method used (procedure with revision). Data were reported in the proper units and correct number of significant figures.

- Calculations have been verified by a valid calculation program, a spot check of verified calculation programs, and/or 100% check of all hand calculations. Values not verified to within rounding or significant difference discrepancies are rectified prior to completion of the ITR.

- The data were reviewed for transcription errors.

- The testing data QA documentation for BDRs is complete and includes, as applicable, raw data, calculation records, and/or calibration records (or references to an available package). Corrective action is taken to ensure all BDRs are complete and include all necessary raw data prior to completion of the ITR.

- Radiography tapes have been reviewed (independent observation) on a waste container basis once per testing batch, or once per day of operation, whichever is less frequent (Section C1-1). The RTR tapes are reviewed against the reported data on the radiography form to ensure the data are correct and complete.

- QAOs have been met according to the methods outlined in Sections C3-2 through C3-3.

C3-4b Project Level

Data review, validation, and verification at this level involves scrutiny and signature release from the SPM or designee. MP-TRUW-8.9, *Level II Data Validation*, defines the project level validation and verification process. Any nonconformance identified during this process shall be documented on an NCR (Section C3-7).

The SPM shall ensure that a repeat of the data generation level review, validation, and verification is performed on the data for a minimum of one randomly chosen waste container quarterly (every three months). This exercise will document that the data generation level review, validation, and verification is being performed according to procedures.

C3-4b(1) Site Project Manager Review

The SPM review is the final validation that all of the data contained in BDRs from the data generation level are complete and have been properly reviewed as evidenced by signature release and completed checklists.

One hundred percent of the BDRs have an SPM or designee signature release. At a minimum, the SPM signature release is performed before any waste associated with data reviewed is shipped to WIPP. This signature release ensures the following:

- Testing batch QC checks (e.g., replicate scans, measurement system checks) were properly performed. Radiography data are complete and acceptable based on evidence of videotape review of one waste container per day or once per testing batch, whichever is less frequent, as specified in C1-1.

- Data generation level ITR, validation, and verification have been performed as evidenced by completed review checklists and by the appropriate signature releases.

- ITRs were not involved in the generation or recording of the data under review.

- Batch data review checklists are complete.

- Batch Data Reports are complete and data are properly reported (e.g., data are reported in the correct units, and with the correct number of significant figures).

- Verification that data are within established data assessment criteria and meet the applicable QAOs (Section C3-2 and C3-3).

C3-4b(2) Prepare SPM Summary and Data Validation Summary

To document the project level validation and verification described above, the SPM (or designee) prepares the Site Project Manager Summary and Data Validation Summary. These reports may be combined to eliminate redundancy. The SPM Summary includes a validation checklist for each BDR. Checklists for the SPM Summary are sufficiently detailed to validate all aspects of a BDR that affect data quality.

The Data Validation Summary provides verification that, on a per waste container basis as evidenced by BDR, all data have been validated per this QAPjP. The Data Validation Summary must identify each BDR reviewed (including all waste container numbers), describe how the validation was performed and whether or not problems were detected (e.g., NCRs), and include a statement indicating all data are acceptable. Summaries include release signatures.

C3-4b(3) Prepare Waste Stream Characterization Package

In the event the CBFO request detailed information on a waste stream, the SPM will provide a Waste Stream Characterization Package. The SPM will ensure the Waste Stream Characterization Package (Section C3-6b[3]) will support waste characterization determinations.

C3-4c CBFO Level

Not applicable to the AMWTP; this section refers to WIPP.

C3-5 Reconciliation with Data Quality Objectives

Reconciling the results of waste testing with the DQOs provides a way to ensure data are of adequate quality to support the regulatory compliance programs. Reconciliation with the DQOs takes place at both the project and the CBFO levels. At the project level, reconciliation is performed by the SPM, and submitted to CBFO for review and approval. Reconciliation is performed as described in MP-TRUW-8.11.

C3-5a Reconciliation at the Project Level

The SPM ensures all data generated and used in decision making meet the DQOs provided in Section C-4a(1). The SPM assesses whether data of sufficient type, quality, and quantity have been collected.

For each waste stream characterized, the SPM determines if sufficient data have been collected to determine the following WIPP-WAP-required waste parameters, as applicable:

- Waste Matrix Code
- Waste material parameter weights
- If each container of waste contains TRU radioactive waste
- Whether the waste stream exhibits a TC (TCs) under 40 CFR Part 261, Subpart C
- Whether the waste stream contains listed waste found in 20.4.1.200 NMAC incorporating 40 CFR Part §261, Subpart D
- Whether the waste stream is classified as hazardous or nonhazardous
- Whether the overall completeness, comparability, and representativeness QAOs were met for each of the testing procedures as specified in Sections C3-2 through C3-3 before submittal of a WSPF for a waste stream or waste stream lot.

If the SPM determines insufficient data have been collected to make the determinations listed above, additional data collection efforts must be undertaken. The reconciliation of a waste stream is performed as described in Attachment C4, prior to submittal of the WSPF and CIS to CBFO for that waste stream. The AMWTP will not ship containers from a TRU waste stream for disposal until the SPM determines that the required waste parameters listed above have been met for the waste stream.

C3-5b Reconciliation at the CBFO Level

Not applicable to the AMWTP.

C3-6 Data Reporting Requirements

Data reporting requirements define the type of information and the method of transmittal for data transfer from the data generation level to the project level and from the project level to WIPP.

C3-6a Data Generation Level

Data are transmitted by hardcopy or electronically with WTS (a hardcopy is available on demand) from the data generation level to the project level. Transmitted data includes all BDRs and data review checklists. The BDRs and checklists contain all information required by the testing techniques described in Attachments C1 through C6, as well as the signature releases to document the review, validation, and verification described in Section C3-4. All BDRs and checklists are in approved formats, as provided in approved procedures.

Hard copy and/or electronic BDRs are forwarded to the SPM. All BDRs are assigned serial numbers and each page is numbered. The serial number used may be the same as the batch number.

QA documentation , including raw data, are maintained in testing files or site project files in accordance with the document storage requirements identified in MP-DOCS-18.2.

C3-6b Project Level

The SPM prepares a WSPF in accordance with MP-TRUW-8.14 for each waste stream certified for shipment to WIPP based on information obtained from AK and BDRs, if applicable. In addition, the CIS and Waste Stream Characterization Package (when requested by the CBFO) are prepared as appropriate. The SPM verifies these reports are consistent with information found in batch reports. Summarized testing data are included with the CIS. The contents of the WSPF, the CIS, and the Waste Stream Characterization Package are discussed in the following sections.

After approval of a WSPF and the associated CIS, the AMWTP maintains a cross-reference of container identification numbers to each BDR.

A Waste Stream Characterization package must be submitted by hard copy or electronically from the SPM to CBFO when requested.

C3-6b(1) Waste Stream Profile Form

The WSPF is prepared in accordance with MP-TRUW-8.14. The WSPF (Figure C-1) includes the following information:

- Generator/storage site name
- Generator/storage site EPA ID
- Date of audit report approval by NMED (if obtained)
- Original generator of waste stream
- Whether waste is CH or remote-handled
- The waste stream WIPP identification number
- Summary Category Group
- Waste Matrix Code Group
- Waste Material Parameter Weight Estimates per unit of waste
- Waste stream name
- Description of the waste stream

- Applicable EPA HWNs
- Applicable TRUCON codes
- A listing of AK documentation used to identify the waste stream
- The waste characterization procedures used and the reference and date of the procedure
- Certification signature of SPM, name, title, and date signed.

C3-6b(2) Characterization Information Summary

The CIS is prepared in accordance with MP-TRUW-8.14. The CIS includes the following elements:

- Data reconciliation with DQOs.
- Radiography and VE summary to document that all prohibited items are absent in the waste and to verify that the physical form of the waste matches the waste stream description as determined by AK (if applicable).
- A justification for the selection of RTR and/or VE as an appropriate method for characterizing the waste.
- A complete listing of container identification numbers used to generate the WSPF, cross referenced to each BDR.
- Complete AK summary including waste stream name and number, point of generation, waste stream volume (current and projected), generation dates, TRUCON codes, Summary Category Group, Waste Matrix Code(s), and Waste Matrix Code Group, other TRU Waste Baseline Inventory Report information, waste stream description, areas of operation, generating processes, RCRA determinations (including determination for ignitability, corrosivity, and reactivity), and radionuclide information, all references used to generate the AK summary, and any other information required by Section C4-2b.
- Method for determining Waste Material Parameter Weights per unit of waste.
- List of any AK Sufficiency Determination requested for the waste stream.
- Certification through AK or testing that any waste assigned the HWN of U134 (hydrofluoric acid) no longer exhibits the characteristic of corrosivity. This is verified by ensuring that no liquid is present in U134 waste.

C3-6b(3) Waste Stream Characterization Package

The Waste Stream Characterization Package, which is prepared in accordance with MP-TRUW-8.14, consists of the following elements:

- Waste Stream Profile Form (Section C3-6[1])
- Accompanying CIS (Section C3-6[2])
- Complete AK summary (C3-6[2])
- BDRs supporting the characterization of the waste stream and any others requested by the CBFO
- Raw testing data requested by the CBFO.

C3-6b(4) Waste Data System/WIPP Waste Information System (WDS/WWIS) Data Reporting

The WDS/WWIS Data Dictionary contains all of the data fields, the field format, and the limits associated with the data as established by the WIPP-WAP. These data are subject to edit and limit checks performed automatically by the database, as defined in the *Waste Data System User's Manual* (DOE 2009).

C3-7 Nonconformances

The status of work and the QAPjP activities are monitored and controlled by the SPM, including nonconformance identification, documentation, and reporting. MP-TRUW-8.1 discusses specific nonconformance procedures and corrective action processes.

Nonconformances

Nonconformances are uncontrolled and unapproved deviations from an approved plan or procedure. Nonconforming items and activities are those that do not meet the WIPP-WAP requirements, procurement document criteria, or approved procedures and are addressed in MP-Q&SI-5.4. Nonconforming items are marked, tagged, or segregated and the affected personnel notified. Any waste container for which an NCR has been written will not be shipped to the WIPP facility unless the condition that led to the NCR for that container has been dispositioned in accordance with the CBFO Quality Assurance Program Document (QAPD).

Disposition of nonconforming items shall be identified and documented. MP-Q&SI-5.4 identifies the person(s) responsible for evaluating and dispositioning nonconforming items.

For each container selected for confirmation pursuant to Attachment C7, the confirmation team will examine the respective NCR documentation to verify NCRs have been dispositioned for the selected container.

Management at all levels will foster a "no-fault" attitude to encourage the identification of nonconforming items and processes. Nonconformances may be detected and identified by anyone performing WIPP-WAP activities, including:

- Project staff – during field operations, supervision of subcontractors, data validation and verification, and self-assessment
- Testing Facility staff – during the preparation for and performance of laboratory testing; calibration of equipment; QC activities; data review, validation, and verification; and self-assessment
- QA personnel – during oversight activities or audits.

An NCR shall be prepared for each nonconformance identified. Each NCR shall be initiated by the individual(s) identifying the nonconformance. The NCR shall then be processed by knowledgeable and appropriate personnel. For this purpose, an NCR including, or referencing as appropriate, results of laboratory analysis, QC rests, audit reports, internal memoranda, or letters shall be prepared. The NCR must provide the following information:

- Identification of the individual(s) identifying or originating the nonconformance
- Description of the nonconformance
- Method(s) or suggestions for correcting the nonconformance (corrective action)
- Schedule for completing the corrective action
- An indication of the potential ramifications and overall usability of the data, if applicable
- Any approval signature specified in the site nonconformance procedures.

The SPM oversees the NCR process and is responsible for identifying and tracking all nonconformances and reports this information to CBFO. The SPM is also responsible for notifying project personnel of the nonconformance and verifying completion of the corrective action for nonconformances.

Nonconformance to DQOs

For any non-administrative nonconformance related to applicable requirements specified in this QAPjP, which are first identified at the SPM signature release level (i.e., a failure to meet a DQO), AMWTP will submit to CBFO a written notification within seven calendar days of identification and submit an NCR within thirty (30) calendar days of identification of the incident. The AMWTP will issue an NCR and implement corrective actions, which will be resolved prior to shipment.

C3-8 Special Training Requirements and Certifications

Before performing activities that affect QAPjP quality, all personnel receive indoctrination into the applicable scope, purpose, and objectives of the QAPjP and the specific QAOs of the assigned task. Personnel assigned to perform activities for the QAPjP have the education, experience, and training applicable to the functions associated with the work. Evidence of personnel proficiency and demonstration of competence in the task(s) assigned is demonstrated and documented. All personnel designated to work on specific aspects of the QAPjP maintain qualification (that is, training and certification) throughout the duration of the work. Qualification requirements for personnel are documented in Individual Training Plans or qualification packages. Job performance is evaluated and documented at periodic intervals to ensure personnel maintain proficiency and record additions to training, as necessary per MP-RTQP-14.4.

Personnel involved in QAPjP activities receive continuing training to ensure job proficiency is maintained. The due date for required continued training courses and requalification shall be the end of the month of the anniversary date when the training was previously completed. Training includes both education in principles and enhancement of skills. Training records that specify the scope of the training, the date of completion, and documentation of job proficiency are maintained as QA Records. Maintenance of training records is addressed in MP-RTQP-14.19, *Training Records Administration*.

The minimum qualifications for certain specified positions are summarized in Table C3-2. MP-RTQP 14.4 identifies the site-specific titles and minimum training and qualification requirements for personnel performing WAP activities.

An evaluation of personnel qualifications includes comparing and evaluating the requirements specified in the job/position description and the skills, training, and experience included in the person's current resume. This evaluation, done in accordance with MP-RTQP-14.1, Preparation and Administration of Training Plans, and MP-RTQP-14.4, is also performed for personnel who change positions because of a transfer or promotion as well as personnel assigned to short-term or temporary work assignments that may affect the quality of the WIPP-WAP.

C3-9 Changes to Plans and Procedures

Controlled changes to WIPP-WAP related plans or procedures are made in accordance with the WIPP QAPD and managed through MP-DOCS-18.4, *Document Control*. The SPM shall review all non-administrative changes and evaluate whether those changes could impact DQOs specified in the permit. After AMWTP certification, any changes to WIPP-WAP related plans or procedures that could positively or negatively impact DQOs (i.e., those changes that require prior approval of the CBFO as defined in Section C5-2) shall be reported to the CBFO within five (5) days of identification by the project level review.

Table C3-1. Waste Material Parameters and Descriptions.

Waste Material Parameter	Description
Iron-based Metal/Alloys	Iron and steel alloys in the waste excluding the waste container materials.
Aluminum-based Metals/Alloys	Aluminum or aluminum-based alloys in the waste materials.
Other Metals	All other metals found in the waste materials (for example, copper, lead, zirconium, tantalum, etc.).
Other Inorganic Materials	Nonmetallic inorganic waste, including concrete, glass, firebrick, ceramics, sand, and inorganic sorbents.
Cellulosics	Materials generally derived from high polymer plant carbohydrates, for example, paper, cardboard, wood, cloth, etc.
Rubber	Natural or man-made elastic latex materials, for example, surgeon gloves, leaded rubber gloves, etc.
Plastics (Waste Materials)	Generally man-made materials, often derived from petroleum feedstock, for example, polyethylene, polyvinylchloride, etc.
Organic Matrix	Cemented organic resins, solidified organic liquids, and sludges.
Inorganic Matrix	Any homogeneous materials consisting of sludge, or aqueous-based liquids solidified with cement, calcium silicate, or other solidification agents; for example, waste water treatment sludge, cemented aqueous liquids, and inorganic particulates, etc.
Soils/gravel	Generally consists of naturally occurring soils which have been contaminated with inorganic waste materials.
Steel (Packaging Materials)	208-L (55-gal) drums.
Plastics (Packaging Materials)	90 mil polyethylene drum liner and plastic bags.

Table C3-2. Minimum Training and Qualification.

Personnel	Requirements[a]
Radiography Operators[a]	Site-specific training based on waste matrix codes and waste material parameters; requalification every two years.

a. Operators are those persons responsible for the actual operation of analytical testing equipment. QAPjPs shall include the site-specific title for this position.

Table C3-3.Testing Batch Data Report Contents.

Required Information	Radiography	Visual Examination	Comment
Batch Data Report Date	X	X	
Batch number	X	X	
Waste container number	X	X	
Waste stream name and/or number	O	O	
Waste Matrix Code	X	X	Summary Category Group included in waste matrix code
Implementing procedure (specific version used)	X	X	If procedure cited contains more than one method, the method used must also be cited. Can use revision number, date, or other means to track specific version used.
Container type	O	O	Drums, standard waste box, ten drum overpack, etc.
Video media reference	X	X	Reference to video media applicable to each container. For VE of newly generated waste, video media not required if two trained operators review the contents of the waste container to ensure correct reporting.
Imaging check	O		
Camera check		O	
Audio check	O	O	
QC documentation	X	X	
Verification that the physical form matches the waste stream description and Waste Matrix Code.	X	X	Summary Category Group included in Waste Matrix Code.
Comments	X	X	Comments

Required Information	Radiography	Visual Examination	Comment
Reference to or copy of associated NCRs, if any	X	X	Copies of associated NCRs must be available.
Verify absence of prohibited items	X	X	
Operator signature and date of test	X	X	Two signatures required for Visual Verification of Acceptable Knowledge
Data review checklists	X	X	All data checklists will be identified

Legend:

X – Required in batch data report
O – Information must be documented and traceable inclusion in batch data report is optional

Attachment C4.
TRU Waste Characterization Using Acceptable Knowledge

C4-1 Introduction

The RCRA regulations codified in 40 CFR Parts 260 through 265, 268, and 270, and the New Mexico Hazardous Waste Management Regulations in 20 NMAC 4.1 Subparts 100 through 600, Subpart 800, and Subpart 900, authorize the use of AK in appropriate circumstances by waste generators, or treatment, storage, or disposal facilities to characterize hazardous waste. AK is described in Waste Analysis: *EPA Guidance Manual for Facilities That Generate, Treat, Store and Dispose of Hazardous Waste*. AK, as an alternative to sampling and analysis, can be used to meet all or part of the waste characterization requirements under the RCRA.

EPA's 1994 Waste Analysis Guidance Manual broadly defines the term "acceptable knowledge" to include process knowledge, whereby detailed information on the waste is obtained from existing published or documented waste analysis data or studies conducted on hazardous waste generated by processes similar to that which generated the waste, facility records of analysis performed before the effective date of RCRA, and waste analysis data obtained from generators of similar waste that send their wastes offsite for treatment, storage, or disposal (EPA 1994). If AMWTP determines that AK alone is insufficient to accurately characterize a waste, AMWTP may use RTR and/or VE (specified in Attachment C1) to complete the waste characterization process and satisfy the requirements of the QAPjP. Acceptable Knowledge is used in TRU mixed waste characterization activities in five ways:

- To delineate TRU mixed waste streams
- To assess whether TRU mixed wastes comply with the applicable requirements of WIPP Hazardous Waste Permit TSDF-WAC
- To assess whether TRU mixed wastes exhibit a hazardous characteristic (20 NMAC 4.1.200, incorporating 40 CFR §261, Subpart C)
- To assess whether TRU mixed wastes are listed (20 NMAC 4.1.200, incorporating 40 CFR §261, Subpart D)
- To estimate waste material parameter weights.

Radiography and VE may be performed to augment the characterization of wastes based on AK when an AK Sufficiency Determination has not been requested by AMWTP or, if requested, has not been granted by CBFO (see Section C4-3d). TRU mixed waste streams undergo applicable provisions of the AK process prior to management, storage, or disposal of the waste at WIPP.

C4-2 Acceptable Knowledge Documentation

The AMWTP AK information is presented in a logical sequence which progresses from general facility information (TRU mixed waste management program information) to the more detailed waste-specific information (TRU mixed waste stream information). Traceability of AK information for a selected container in the audited Waste Summary Category Group(s) will be examined during the CBFO audit of AMWTP. The consistent presentation of AK documentation among sites in auditable records[c] will allow the CBFO to verify the completeness and adequacy of AK for TRU mixed waste characterization during the audit process. AMWTP will implement the AK process as specified in this QAPjP to characterize TRU mixed waste and obtain sufficient waste characterization data to demonstrate compliance with the WIPP-WAP. This AK information applies at AMWTP to both the retrievably stored and newly generated waste streams. The AK process is described in MP-TRUW-8.13. The AMWTP does not develop AK baseline documents for offsite DOE CH-TRU wastes that are characterized and certified by another certified program, such as the CCP. AMWTP also does not develop AK baseline documents for waste that is received for characterization only.

The following sections include the information required to characterize TRU mixed waste using AK. The AMWTP will augment the required AK records with additional supporting information. If the required information is not available for a particular waste, the waste stream is not eligible for an AK Sufficiency Determination as specified in Section C4-3d.

C4-2a Required TRU Mixed Waste Management Program Information

TRU mixed waste management program information clearly defines waste categorization schemes and terminology, provides a breakdown of the types and quantities of TRU mixed waste that are generated and stored at the AMWTP, and describes how waste is tracked and managed at the AMWTP, including historical and current operations. Information related to TRU mixed waste certification procedures and the types of documentation (e.g., waste profile forms) used to summarize AK is also provided.

The AMWTP will be involved in characterizing stored waste generated at multiple facilities and creating newly generated TRU mixed waste in the AMWTP processing facility. For each generator of waste the following general facility information shall be included as part of the AK written record:

- A map of the site with the areas and facilities involved in TRU mixed waste generation, treatment, and storage identified

c. "Auditable Records" are those records which allow the CBFO to conduct a systematic assessment, analysis, and evaluation of the CBFO compliance with the WAP and the WIPP RCRA Permit.

- Facility mission description as related to TRU mixed waste generation and management (e.g., nuclear weapons research may involve metallurgy, radiochemistry, and nuclear physics operations that result in specific waste streams)
- Description of the operations that generated TRU mixed waste at the site (e.g., plutonium recovery, weapons design, or weapons fabrication)
- Waste identification and category schemes used at the site (e.g., item description code, content codes)
- Types and quantities of TRU mixed waste generated, including historical generation through future projections
- Correlation of waste streams generated for the same building and process, as appropriate (e.g., sludge, combustibles, metals, and glass)
- Waste certification procedures for retrievably stored and newly generated wastes to be sent to the WIPP facility.

C4-2b Required TRU Mixed Waste Stream Information

AK will be used to delineate waste streams. For each TRU mixed waste stream, the AMWTP compiles all process information and data that support the AK used to characterize that waste stream. The type and quantity of supporting documentation varies by waste stream depending on the process generation the waste and the site-specific requirements. At a minimum, the waste process information on each waste stream includes the following written information:

- Area(s) and building(s) from which the waste stream was or is generated.
- The waste stream volume and period of waste generation (e.g., 100 standard waste boxes of retrievable stored waste generated from June 1977 through December 1977).
- Waste generating process for each building (e.g., batch waste stream generated during decommissioning operations of glove boxes), including processes associated with U134 waste generation, if applicable.
- Documentation regarding how the site has historically managed the waste, including the historical regulatory status of the waste (i.e., TRU mixed versus TRU non-mixed waste).
- Process flow diagrams (e.g., a diagram illustrating glove boxes from a specific building to a size reduction facility to a container storage area). In the case of research/development, analytical laboratory waste, or other similar processes where a process flow diagram cannot be created, a description of the waste generating process, rather than a formal process flow diagram, may be included if this modification is justified and the justification placed in the auditable record.

- Material inputs or other information that identifies the chemical content of the waste stream and the physical waste form (e.g., glove box materials and chemicals handled during glove box operations; events or processes that may have modified the chemical or physical properties of the waste stream after generation, data obtained through VE of newly generated waste that later undergoes RTR; information demonstrating neutralization of U134 [hydrofluoric acid] and waste compatibility).

The AK written record includes a summary that identifies all sources of waste characterization information used to delineate the waste stream. The basis and rationale for delineating each waste stream, based on the parameters of interest, is clearly summarized and traceable to referenced documents. Assumptions made in delineating each waste stream also are identified and justified.

If discrepancies exist between required information, the AMWTP may consider applying all EPA HWNs indicated by the information to the subject waste stream, but must assess and evaluate the information to determine the appropriate EPA HWNs consistent with RCRA requirements. Discrepancy resolution for the AK is described in MP-TRUW-8.13.

CBFO will obtain, at a minimum, procedures that comply with the following AK requirements:

- Procedures for identifying and assigning the physical waste form of the waste
- Procedures for delineating waste streams and assigning Waste Matrix Codes
- Procedures for resolving inconsistencies in AK documentation
- Procedures for VE and/or RTR, if applicable
- For newly generated waste, procedures describing process controls used to ensure prohibited items (specified in the WIPP-WAP, Permit Attachment C) are documented and managed
- Procedures to ensure RTR and VE include a list of prohibited items that the operator shall verify are not present in each container (e.g., liquid exceeding WIPP Hazardous Waste Permit TSDF-WAC limits, corrosives, ignitable, reactives, and incompatible wastes)
- Procedures to document how changes to Waste Matrix Codes, waste stream assignment, and associated EPA HWNs based on material composition are documented for any waste
- Procedures that ensure the assignment of EPA HWNs is appropriate, consistent with RCRA requirements, and considers site historical waste management
- Procedures for estimating waste material parameter weights.

C4-2c Additional Acceptable Knowledge Documentation

Additional AK information, as appropriate, is collected to augment required information and provide any other information obtained to further delineate waste streams. Adequacy of this information is assessed during audits (Section C4-3g). This information is included in the AK written record.

All additional specific, relevant AK documentation assembled and used in the AK process, whether it supports or contradicts any required AK documentation shall be identified and an explanation provided for its use (e.g., identification of a TC). Additional documentation may be used to further document the rationale for the hazardous characterization results. The collection and use of additional information shall be assessed during site audits to ensure that hazardous waste characterization is supported, as necessary, by such information. Similar to required information, if discrepancies exist between additional information and the required information, then the AMWTP may consider applying all EPA HWNs indicated by the additional information to the subject waste stream, but must assess and evaluate the information to determine the appropriate EPA HWNs consistent with RCRA requirements. All information considered must be documented and placed in the auditable record, including applicable discrepancy resolution documentation. Discrepancy resolution for the AK is described in MP-TRUW-8.13.

Additional AK documentation includes, but is not limited to, the following information:

- Process design documents (e.g., Title II Design).
- Standard operating procedures that may include a list of raw materials or reagents, a description of the process or experiment generating the waste, and a description of waste generated and how the wastes are managed at the point of generation.
- Preliminary and final safety analysis reports and technical safety requirements.
- Waste packaging records.
- Test plans or research project reports that describe reagents and other raw materials used in experiments.
- Site databases (e.g., chemical inventory database for Superfund Amendments and Reauthorization Act Title III requirements).
- Information from site personnel (e.g., documented interviews).
- Standard industry documents (e.g., vendor information).

- Analytical data relevant to the waste stream, including results from fingerprint analyses, spot checks, routine verification sampling, or other processes that collect information pertinent to the waste stream. This may also include new information which augments required information (e.g., VE not performed in compliance with the WIPP-WAP, radiography screening for prohibited items).

- Material Safety Data Sheets, product labels, or other product package information.

- Sampling and analysis data from comparable or surrogate waste streams (e.g., equivalent nonradioactive materials).

- Laboratory notebooks that detail the research processes and raw materials used in an experiment.

C4-3 Acceptable Knowledge Training, Procedures, and Other Requirements

Consistency in using AK information to characterize TRU mixed waste is provided by use of the following: (1) compiling the required and additional AK documentation in an auditable record, (2) auditing AK records, and (3) WSPF approval and waste confirmation. This section specifies the qualification and training requirements, describes each phase of the process, specifies the procedures that AMWTP is required to develop to implement the requirements for using AK, and specifies the data quality requirements for AK.

C4-3a Qualifications and Training Requirements

To ensure compliance with the requirements for compiling assembling, evaluating, assessing and resolving discrepancies associated with AK, AMWTP AK personnel shall be trained in accordance with MP-RTQP-14.4.

The training requirements shall include the following subjects:

- WIPP-WAP in Permit Attachment C and the WIPP Hazardous Waste Permit TSDF-WAC specified in this QAPjP

- State and Federal RCRA regulations associated with solid and hazardous waste characterization

- Discrepancy resolution and reporting processes

- Site-specific procedures associated with waste characterization using AK.

C4-3b Acceptable Knowledge Assembly and Compilation

Site-specific AK procedures address the following:

- A written procedure(s) outlining the specific methodology used to assemble AK records, including the origin of the documentation, how it will be used, and any limitations associated with the information (e.g., identify the purpose and scope of a study that included limited sampling and analysis data).

- A written procedure(s) to compile the required AK record.

- A written procedure(s) that ensures unacceptable wastes (e.g., reactive, ignitable, corrosive) are identified and segregated from TRU mixed waste populations sent to WIPP.

- A written procedure(s) to evaluate AK and resolve discrepancies. For example, if different sources of information indicate different hazardous wastes are present, then AMWTP includes all sources of information in its records and may choose to either conservatively assign EPA HWNs or assign only those numbers deemed appropriate and consistent with RCRA requirements. All information used to justify assignment of EPA HWNs must be placed in the auditable record. Further, the assignment of EPA HWNs is tracked in the auditable record to all required documentation.

- A written procedure(s) to identify hazardous wastes and assign the appropriate EPA HWNs to each waste stream. The following are minimum baseline requirements/standards that site-specific procedures include to ensure comparable and consistent characterization of hazardous waste:

  - Compilation of all of the required information in an auditable record.

  - Review of the compiled information and delineate waste streams. Delineation of waste streams must comply with the definition in Section C-0a and justify combining waste historically managed separately as TRU mixed and TRU non-mixed waste streams into a single waste stream.

  - Review of the compiled information to determine if the waste stream is compliant with the WIPP Hazardous Waste Permit TSDF-WAC.

  - Review of the required information to determine if the waste is listed under 20 NMAC 4.1.200 (incorporating 40 CFR §261), Subpart D. All listed EPA HWNs are assigned unless AMWTP chooses to justify an alternative assignment and document the justification in the auditable record.

- Review of the required information to determine if the waste exhibits a hazardous characteristic or may contain hazardous constituents included in the TCs specified in 20 NMAC 4.1.200 (incorporating 40 CFR §261), Subpart C. If a TC contaminant is identified and is not included as a listed waste, the AMWTP may evaluate available data and assign TC HWN consistent with RCRA requirements. All data examined to reach the HWN determination must be placed in the auditable record and must present a clear justification for the EPA HWN analyses.

- Review the compiled information to provide an estimate of material parameter weights for each container to be stored or disposed of at WIPP.

For newly generated wastes, procedures are implemented to characterize hazardous waste using AK prior to packaging the waste.

- Ensure that results of audits of the TRU mixed waste characterization programs at the site are available in the records.

- AMWTP will identify all process controls (implemented to ensure that the waste contains no prohibited items and to control hazardous waste content and/or physical form) that may have been applied to retrievably stored waste and/or may presently be applied to newly generated waste. Process controls are applied at the time of waste generation/packaging to control waste content, whereas any activities performed after waste generation/packaging to identify prohibited items, hazardous waste content, or physical form are waste characterization activities, not process controls. The AK record must contain specific process controls and supporting documentation identifying when these process controls are used to control waste content. See Section C-2 for programmatic requirements related to process controls.

C4-3c Criteria for Assembling an Acceptable Knowledge Record and Delineating the Waste Stream

MP-TRUW-8.13 provides an overview of the process for assembling AK documentation into an auditable record. The first step is to assemble all of the required AK information and any additional information regarding the materials and processes that generate a specific waste stream.

Procedures are implemented to establish AK records in compliance with the following criteria:

- AK information is compiled in an auditable record, including a road map for all applicable information.

- The overview of the facility and TRU mixed waste management operations in the context of the facility's mission is correlated to specific waste stream information.

- The method for documenting correlations between waste streams, with regard to time of generation, waste generating processes, and site-specific facilities are described in MP-TRUW-8.13. For newly generated waste, the rate (or schedule) and quantity of waste to be generated will be defined.

- A reference list shall be provided that identifies documents, databases, QA protocols, and other sources of information that support the AK information.

Container inventories for TRU mixed waste currently in retrievable storage can be found in the WTS. These container inventories will be delineated into waste streams by correlating the container identification to all of the required AK information and any additional AK information.

C4-3d AK Sufficiency Determination Request Contents

AMWTP may submit an AK Sufficiency Determination Request to meet all or part of the waste characterization requirements. The Determination Request shall include, at a minimum:

- A complete AK Summary that addresses the following technical requirements:

  - Executive Summary

  - Waste Stream Identification Summary; including a demonstration that the waste stream has been properly delineated and meets the QAPjP definition of waste stream (Attachment C, Introduction)

  - Mandatory Program Information (including, but not limited to, facility location and description, mission, defense waste assessment, spent nuclear fuel and high-level waste assessment, description of waste generating processes, research/development [as necessary], facility support operations [as applicable], types and quantities of TRU waste generated, correlation of waste streams to buildings/processes, waste identification and categorization, physical form identifiers)

  - Mandatory Waste Stream Information (including, but not limited to, Area and Building of Generation, waste stream volume/period of generation (including, for newly generated waste, the rate and quantity of waste to be generated), waste generating activities, types of waste generated, material input related to physical form and identification of percentage of each waste material parameter in the waste stream, chemical content information including hazardous constituents and hazardous waste identification, prohibited item content (including documented evidence that the waste meets the WIPP Hazardous Waste Permit TSDF-WAC Sections 2.3.3.1 through 2.3.3.10), waste packaging, presence of filter vents, number of layers of confinement)

  - Types of additional information gathered

- Container specific data (if available and relevant)
- A complete reference list including all mandatory and additional information

- An AK roadmap (defined as a cross reference between mandatory programmatic and mandatory waste stream information, with references supporting these requirements)
- A complete reference list including all mandatory and additional documentation
- Additional relevant information for the required programmatic and waste stream data addressed in the AK Summary, examples of which are presented in Section C4-2c
- Identification of any mandatory requirements supported only by upper tier documents (i.e., there is insufficient supporting data)
- Description or other means of demonstrating that the AK process described in the QAPjP was followed (for example, AK personnel were appropriately trained; discrepancies were documented, etc.)
- Information showing that the AMWTP has developed a written procedure for compiling the AK information and assigning EPA HWNs as required in Section C4-3b
- Information showing that the AMWTP has assessed the AK process (e.g. internal audits, Section C4-3b).

The CBFO will evaluate the Determination Request for completeness and technical adequacy as specified in Attachment C.

C4-3e Requirements for Re-Evaluating AK Information

AK includes information regarding the physical form of the waste, the base materials composing the waste, and the process that generates the waste. Waste testing (i.e., RTR or VE) may be used to augment AK information.

The WSPF and CIS (including the AK summary) will be reviewed for each waste stream prior to CBFO approval of the WSPF. The CBFO review will ensure that the submitted AK information was collected under procedures that ensure implementation of the QAPjP, provides data sufficient to meet the DQOs in Section C-4a(1), and allow the AMWTP to demonstrate compliance with the waste analysis requirements of the QAPjP. A detailed discussion of the CBFO's waste stream review and approval process is provided in Section C-1d.

The AMWTP has established procedures for reevaluating AK if the results of waste confirmation indicate that the waste to be shipped does not match the approved waste stream, or if data obtained from RTR or VE for waste streams without an AK Sufficiency Determination exhibit

this discrepancy. These procedures describe how the waste is reassigned, AK reevaluated, and appropriate EPA HWNs assigned. If the reevaluation requires that the Waste Matrix Code be changed for the waste stream or the waste does not match the approved waste stream, the following minimum steps are taken to reevaluate AK. This process is implemented in MP-TRUW-8.13.

- Review existing information based on the container identification number and document all differences in EPA HWN assignments.
- If differences exist in the EPA HWNs that were assigned, reassess and document all required AK information (Section C4-3b) associated with the new designation.
- Reassess and document all testing data associated with the waste.
- Verify and document that the reassigned Waste Matrix Code was generated within the specified time period, area and buildings, waste generating process, and that the process material inputs are consistent with the waste material parameter identified during RTR or VE.
- All changes to AK records are recorded.
- If discrepancies exist in the AK information for the revised Waste Matrix Code, the segregation of the affected portion of the waste stream is documented, and the actions necessary to fully characterize the waste are defined.

C4-3f Acceptable Knowledge Data Quality Requirements

The DQOs for testing techniques are provided in Attachment C3. Testing results are used to augment the characterization of wastes based on AK. To ensure that the AK process is consistently applied, the AMWTP complies with the data quality requirements for AK documentation described in Attachment C3.

The AMWTP addresses QC by tracking its performance with regard to the use of AK by: (1) assessing the frequency of inconsistencies among information, and (2) documenting the results of waste discrepancies identified by AMWTP during waste characterization or the CBFO during waste confirmation using RTR, review of RTR audio/video recordings, VE, or review of VE records. In addition, the AK process and waste stream documentation is evaluated through internal assessments by AMWTP QA organizations.

C4-3g Audits of Acceptable Knowledge

CBFO will conduct an initial audit prior to certifying AMWTP for shipment of TRU mixed waste to the WIPP facility. This initial audit will establish an approved baseline that will be reassessed annually. Those audits verify compliance with the WIPP-WAP, ensure the consistent compilation, application, and interpretation requirements of AK information throughout the DOE complex, and evaluate the completeness and defensibility of site-specific AK documentation related to hazardous waste determinations.

The QA organization performs a periodic independent audit, or several small scope audits, of AMWTP activities in accordance with MP-M&IA-17.2, *Independent Assessment*. QA AK audit checklists include the elements listed below for review during the periodic audit, and the AMWTP provides information as requested by QA to satisfy the AK audit/surveillance requirements:

- Documentation of the process used to compile, evaluate, and record AK is available and implemented
- Personnel training and qualifications are documented
- All of the required AK documentation specified in Section C4-2 has been compiled in an auditable record
- All the required procedures specified in Section C4-3 have been developed and implemented, including but not limited to
    - A procedure exists for assigning EPA HWNs as referenced in Section C4-3b(5)
    - A procedure exists for resolving discrepancies in AK documentation in accordance with Section C4-3b
- Results of other audits of the TRU mixed waste characterization programs at AMWTP are available in site records.

Attachment C5.
Quality Assurance Project Plan Requirements

C5-1 Quality Assurance Project Plans

The AMWTP has developed and implemented this QAPjP to address the applicable requirements specified in the WIPP-WAP. This QAPjP will be submitted and approved by the CBFO to ensure that it includes the qualitative or quantitative criteria to ensure that waste characterization activities are being performed satisfactorily.

The AMWTP uses standard operating procedures for all activities which affect the quality of the waste characterization program elements specified in this QAPjP. For the purposes of the QA program, the term *standard operating procedure* refers to any site-specific implementing document. Compliance with standard operating procedures ensures that tasks are performed in a consistent manner that results in achieving the quality required for the QA program. Throughout this QAPjP, site-specific documents are referenced that detail how each of the required elements of the characterization program are performed.

C5-2 Document Review, Approval, and Control

The preparation, issuance, and change to documents that specify quality requirements or prescribe activities affecting quality for the TRU mixed characterization program elements specified in this QAPjP are controlled to ensure the correct and current documents are used and referenced. QAPjPs include a document control number consisting of a unique document identification number, current revision number, date, and page number which will be placed on the individual pages of the document. Qualified and independent individuals will review all quality documents for the waste characterization program prior to approval and issuance. There will be appropriate QAPjP approval that is indicated by a signature and date page included in the front of each document. AMWTP compliance with the WIPP-WAP requirements for document review, approval, and control is defined in Section 4 of MP-TRUW-8.1 and MP-DOCS-18.4. The CBFO approves this QAPjP and other program documents defining performance criteria or data quality.

Table C5-1. Minimum requirements for review, approval, implementation, and control of QAPjP.

	RESPONSIBLE PARTY				
	Manager, CBFO QA	CBFO Director National TRU Program	DOE-ID	AMWTP SPM	AMWTP QA Manager
Review/Approval	X	X	X	X	X
Implementation				X	X
Change Approval	X	X	X	X	X
Change Control				X	X

Table C5-1 presents the minimum requirements for review, approval, and implementation of the QAPjP. The QAPjP will be reviewed for technical adequacy, completeness, and correctness, and the inclusion of requirements established by the WIPP-WAP.

Revisions to documents that implement the requirements of the QAPjP will be denoted by including the current revision number on the document's title page, the revised signature page, and each page that has been revised. Only revised pages need to be reissued although the entire document may be reissued. Changes to documents, other than those defined as editorial changes or minor changes, will be reviewed and approved by the same functional organizations that performed the original review and approval, unless other organizations are specifically designated in accordance with approved procedures. Editorial or minor changes may be made without the same level of review and approval as the original or otherwise changed document. The following items are considered editorial or minor changes:

- Correcting grammar or spelling (the meaning has not changed)
- Renumbering sections or attachments
- Updating organizational titles
- Changes to nonquality-affecting schedules
- Revised or reformatted forms, providing the original intent of the form has not been altered
- Attachments marked "Example," "Sample," or exhibits that are clearly intended to be representative only.

A change in an organizational title accompanied by a change in the responsibilities is not considered an editorial change. Changes to the text shall be clearly indicated in the document. AMWTP shall provide CBFO with the final issued QAPjP.

CBFO ensures that QAPjPs include a detailed description of the reporting and approval requirements for changes to approved QA document and SOPs, including procedures for implementing changes to these documents. All members of the AMWTP site project staff are responsible for reporting any obsolete or superseded information to the SPM. All site-specific changes are evaluated and approved by the AMWTP SPM and QA Manager before implementation. The SPM notifies the appropriate personnel and the affected documents are revised as necessary. The SPM also is responsible for notifying the DOE field office of the changes. The SPM will contact CBFO for approval prior to implementing changes that affect performance criteria or data quality, such as testing procedures, QAOs, calibration requirements, or QC sample acceptance criteria to ensure compliance with the WAP (Attachment C).

Attachment C6.
Audit and Surveillance Program

C6-1 Introduction

The CBFO Audit and Surveillance Program shall ensure that: (1) each site that plans to transport TRU mixed waste to the WIPP facility conduct testing of wastes in accordance with the current WIPP-WAP, and (2) the information supplied by each site to satisfy the waste screening and acceptability requirements of Section C-4 of the WAP is being managed properly. The CBFO will conduct these audits and surveillances at each site performing these activities in accordance with a standard operating procedure. Only personnel with appropriate DOE clearances will have access to classified information during audits. Classified information will not be included in audit reports and records.

Deficiencies may be identified during audits. A deficiency is any failure to comply with an applicable provision of the WAP. During audit interviews or audit meetings, AMWTP personnel may be advised of deficiencies identified within their areas of responsibility to establish a clear understanding of the identified condition.

AMWTP personnel will be given the opportunity to correct any deficiency that can be corrected during the audit period. Deficiencies and observations will be documented and included as part of the final audit report. Those items that have been resolved during the audit (isolated deficiencies that do not require a root cause determination or actions to preclude recurrence), will be verified prior to the end of the audit, and the resolution will be described in the audit report. Those items that affect the quality of the program, and/or the data generated by that program, which are required by the WIPP-WAP will be documented on a CAR and included as part of the final audit report. The CAR will be entered into the CBFO CAR tracking system and tracked until closure. RCRA-related items will be uniquely identified by the AMWTP during self-audits will be evaluated during the CBFO's audit and surveillance program and tracked in the CBFO tracking systems.

If a discrepancy is identified during a CBFO audit, the audit team may prepare a CAR. The AMWTP will review the CAR, evaluate the extent and cause of the deficiency, and provide a response to CBFO indicating the remedial actions and action taken to preclude recurrence. CBFO will review the response and, if acceptable, communicate the acceptance to AMWTP. After all corrective actions have been completed, the CBFO may schedule and perform a verification visit to assure that corrective actions have been completed and are effective.

AMWTP will submit a corrective action plan to CBFO to eliminate the deficiency stated on the CAR, including a resolution of the acceptability of any data generated prior to the resolution of the corrective action.

The corrective action response will include a discussion of the investigation performed to determine the extent and impact of the deficiency, a description of the remedial actions taken, determination of root cause, and actions to preclude recurrence. This process is described in MP-Q&SI-5.4 and MP-Q&SI-5.3, Corrective Action.

The AMWTP will respond to any deficiencies and observations within thirty days after receipt of any CARs and indicate the corrective action taken or to be taken. If the corrective action has not been completed, the response will indicate the expected date the action will be completed. CARs applicable to WAP requirements will be resolved prior to shipment.

Attachment C7.
TRU Waste Confirmation

Introduction

This section of the QAPjP describes the actions that CBFO will take to approve and accept waste for and disposal at the WIPP, including waste confirmation activities. Discussion of the CBFO actions that are relevant to AMWTP will be included here.

CBFO demonstrates compliance with the Permit by ensuring that the waste characterization processes performed by AMWTP produce data compliant with the WIPP-WAP and through the waste screening and verification processes. Verification occurs at three levels: (1) the data generation level, (2) the project level, and (3) the CBFO level. The CBFO also examines a representative subpopulation of waste prior to shipment to confirm that the waste contains no ignitable, corrosive, or reactive waste; and that assigned EPA HWNs are allowed by the WIPP RCRA Permit. The waste confirmation activities described herein occur prior to receipt of TRU mixed waste at WIPP.

C7-1 Permittee Confirmation of TRU Mixed Waste

Waste confirmation is defined in Part 1 as the activities performed by the CBFO to satisfy the requirements in Section 310 of Public Law 108-447. Waste confirmation occurs after waste containers have been certified for disposal at WIPP.

C7-1a Permittee Confirmation of a Representative Subpopulation of the Waste

CBFO will confirm that the waste contains no ignitable, corrosive, or reactive waste through RTR or the use of VE of a statistically representative subpopulation of the waste. Prior to shipment to WIPP, waste confirmation will be performed on randomly selected containers from each CH and RH-TRU mixed waste stream shipment.

Waste confirmation encompasses ensuring that the physical characteristics of the TRU mixed waste correspond with its waste stream description and that the waste does not contain liquid in excess of TSDF-WAC limits or compressed gases.

Noncompliant waste identified during waste confirmation will be managed as described in Section C7-2.

CBFO randomly selects at least 7% of each waste stream shipment for waste confirmation. This equates to a minimum of one container from each fourteen containers in each waste stream in each designated shipment.

For each container selected for confirmation, the confirmation team will examine the respective NCR documentation to verify NCRs have been dispositioned for the selected container as required in Section C3-13.

C7-1a(1) Confirmation Training Requirements

This section does not apply to the AMWTP.

C7-1b Radiography Methods Requirements

This section describes the portion of the CBFO confirmation program that applies to the AMWTP.

For containers that have been characterized using RTR by the AMWTP in accordance with the method in Attachment C1, Section C1-1, the CBFO may perform confirmation by review of the AMWTP's RTR audio/video recordings.

Independent replicate scans and replicate observations of the video output of the RTR process shall be performed under uniform conditions and procedures. Independent replicate scans will be performed on one waste container per day or once per shipment, whichever is less frequent, by a qualified RTR operator other than the individual who performed the first examination. When confirmation is performed by review of audio/video recorded scans produced by the AMWTP as specified in Section C1-3, independent observations will be performed on two waste containers per shipment or two containers per day, whichever is less frequent.

C7-1c Visual Examination Methods Requirements

This section describes the portion of the CBFO confirmation program that applies to the AMWTP.

VE may also be used as a waste confirmation method by the CBFO. VE shall be conducted by the CBFO in accordance with written standard operating procedures to describe the contents of a waste container. VE shall be conducted to identify and describe all waste items, packaging materials, and waste material parameters. VE may be used by the CBFO to examine a statistically representative subpopulation of the waste certified for shipment to WIPP to confirm that the waste contains no ignitable, corrosive, or reactive waste. This is achieved by confirming that the waste contains no liquid in excess of TSDF-WAC limits or compressed gases, and that the physical form of the waste matches the waste stream description documented on the WSPF. During packaging, the waste container contents are directly examined by trained personnel. This form of waste confirmation may be performed by the CBFO at AMWTP. VE may be documented on video and audio media, or by using a second operator to provide additional verification by reviewing the contents of the waste container to ensure correct reporting. When VE is performed using a second operator, each operator performing the VE shall observe for themselves the waste being placed in the waste container or the contents within the examined

waste container when waste is not removed. The results of all VE shall be documented on VE data forms which are used to document (1) the Waste Matrix Code, (2) that the waste container contains no ignitable, corrosive, or reactive waste by documenting the absence of liquids in excess of TSDF-WAC limits or compressed gases, and (3) that the physical form of the waste is consistent with the waste stream description documented on the WSPF.

In order to keep radiation doses as low as reasonably achievable at the AMWTP, the CBFO may use their own trained VE operators to perform VE for waste confirmation by reviewing VE data forms, waste packaging records, and may use the audio/video media. The confirmation team shall document their review of the AMWTP VE data on confirmation data forms.

If the AMWTP documents VE using audio/video media in accordance with Section C1-2, the confirmation team must use the audio/video to perform confirmation. If the waste confirmation team performs waste confirmation by review of audio/video media, the audio/video record of the VE must be sufficiently complete to confirm the Waste Matrix Code and waste stream description, and verify the waste contains no liquid in excess of TSDF-WAC limits or compressed gases. AMWTP VE video/audio media subject to review by the CBFO shall meet the following minimum requirements:

- The video/audio media shall record the waste packaging event for the container such that all waste items placed into the container are recorded in sufficient detail and shall contain an inventory of waste items in sufficient detail that a trained CBFO VE operator can identify the associated waste material parameters.

- The video/audio media shall capture the waste container identification number.

- The personnel loading the waste container shall be identified on the video/audio media or on packaging records traceable to the loading of the waste container.

- The date of loading of the waste container will be recorded on the video/audio media or on packaging records traceable to the loading of the waste container.

VE audio/video media of containers that contain classified shapes shall be considered classified information.

If the AMWTP did not document VE using audio/video media, the CBFO may use their own trained VE operators to perform VE for waste confirmation by reviewing VE data forms or packaging records prepared by the generator during their packaging of the waste. To be acceptable, the AMWTP VE data forms or packaging records must be signed by two AMWTP personnel who witnessed the packaging of the waste and must provide sufficient information for the CBFO to determine that the waste container contents match the waste stream description on the WSPF and the waste contains no liquids in excess of WIPP Hazardous Waste Permit TSDF-WAC limits or compressed gases. AMWTP VE forms or packaging records subject to review by CBFO shall meet the following minimum requirements:

- At least two generator site personnel shall approve the data forms or packaging records attesting to the contents of the waste container.
- The data forms or packaging records shall contain an inventory of waste items in sufficient detail that a trained CBFO VE operator can identify the associated waste material parameters.
- The waste container identification number shall be recorded on the data forms or packaging records.
- VE video media of containers that contain classified shapes shall be considered classified information. VE data forms will not contain classified information.

C7-2 Noncompliant Waste Identified During Waste Confirmation

This section describes the portion of the CBFO confirmation program that applies to the AMWTP.

If the CBFO identifies noncompliant waste during waste confirmation at AMWTP (i.e., the waste does not match the waste stream description documented in the WSPF or there is liquid in excess of TSDF-WAC limits or compressed gases), the waste will not be shipped.

The CBFO will suspend further shipments of the affected waste stream and issue a CAR to the AMWTP. Shipments of affected waste streams will not resume until the CAR has been closed.

As part of the corrective action plan in response to the CAR, the AMWTP will evaluate whether the waste characterization information documented in the CIS and/or WSPF for the waste stream must be updated because the results of waste confirmation for the waste stream indicated that the TRU mixed waste being examined did not match the waste stream description. AMWTP will thoroughly evaluate the potential impacts on waste that has been shipped to WIPP. The CBFO will evaluate the potential that prohibited items were shipped to WIPP and what remedial actions should occur, if any. The results of these evaluations will be provided to NMED before shipments of affected waste stream resume. If the CIS and/or WSPF require revision, shipments of the affected waste stream shall not resume until the revised waste stream waste

characterization information has been reviewed and approved by the CBFO. If AMWTP certifies noncompliant waste more than once during a running 90-day period, the CBFO will suspend acceptance of AMWTP's waste until the CBFO find that all corrective actions have been implemented and the site complies with all applicable requirements of the WIPP-WAP.

D. RECORDS PROCESSING

Record Description	Classification
MP-TRUW-8.2, Case file	Nonpermanent WIPP / ENV1-J-1 Destroy 75 years after submittal

E. REFERENCES

E-0 AMWTP Documents

INST-FOI-17, *Facility Visual Examination Operations*

INST-FOI-20, *Supercompactor and Post-Compaction Operations*

INST-OI-12, *Real-Time Radiography Operations (Drum)*

INST-OI-34, *Non-Facility Visual Examination Operations*

MP-DOCS-18.2, *Records Management*

MP-DOCS-18.4, *Document Control*

MP-M&IA-17.1, *Management Assessment*

MP-M&IA-17.2, *Independent Assessment*

MP-Q&SI-5.3, *Corrective Action*

MP-Q&SI-5.4, *Identification of Nonconforming Conditions*

MP-RTQP-14.1, *Preparation and Administration of Training Plans*

MP-RTQP-14.4, *Personnel Qualification and Certification*

MP-RTQP-14.19, *Training Records Administration*

MP-TRUW-8.1, *Certification Plan for INL Transuranic Waste*

MP-TRUW-8.5, *TRU Waste Certification*

MP-TRUW-8.8, *Level I Data Validation*

MP-TRUW-8.9, *Level II Data Validation*

MP-TRUW-8.11, *Data Reconciliation*

MP-TRUW-8.13, *Collection, Review, and Management of Acceptable Knowledge Documentation*

MP-TRUW-8.14, *Preparation of Waste Stream Profile Forms*

MP-TRUW-8.34, *WIPP Sample Transfers*

E-1 External References

15 USC 2601–2692, "The Toxic Substances Control Act of 1976."

20 NMAC 4.1, 2009, "Hazardous Waste Management," Title 20, New Mexico Administrative Code, Chapter 4, Part 1, Sections 200, 300, 500, and 800, March 2009.

40 CFR 261, 2011, "Identification and Listing of Hazardous Waste," Code of Federal Regulations, Office of the Federal Register, July 2011.

40 CFR 262, 2011, "Standards Applicable to Generators of Hazardous Waste," Code of Federal Regulations, Office of the Federal Register, July 2011.

40 CFR 264, 2011, "Standards for Owners and Operators of Hazardous Waste Treatment, Storage, and Disposal Facilities," Code of Federal Regulations, Office of the Federal Register, July 2011.

40 CFR 268, 2010, "Land Disposal Restrictions," Code of Federal Regulations, Office of the Federal Register, July 2010.

ASTM, 1983b, "Type II Water Dl 193-77," American Society for Testing and Materials, 1983.

ASTM, 1993, "Standard Practice for Reducing Samples of Aggregate to Testing Size, Method B Quartering," ASTM C702-93, Annual Book of ASTM Standards, Philadelphia, Pennsylvania, American Society for Testing and Materials, 1993.

CBFO:OCT:KWW:VW:05-1164:UFC:5822, "Method for Reporting HSC in 100 Gallon Drums Containing Supercompacted 55-Gallon Drums with Rigid Liners," Carlsbad Field Office.

DOE/CAO-94-1005, "Waste Isolation Pilot Plant Transuranic Waste Baseline Inventory Report," U.S. Department of Energy- Carlsbad Area Office, Current Revision.

DOE/CBFO-94-1012, "Quality Assurance Program Document," U.S. Department of Energy-Carlsbad Field Office, Current Revision.

DOE/LLW-217, "DOE Waste Treatability Group Guidance," U.S. Department of Energy-Idaho National Laboratory, January 1995.

DOE/WIPP-02-3122, "Transuranic Waste Acceptance Criteria for the Waste Isolation Pilot Plant," U.S. Department of Energy-Carlsbad Field Office, June 13, 2011.

DOE/WIPP-09-3427, "Waste Data System User's Manual," U.S. Department of Energy-Carlsbad Field Office, 2009.

EPA, 1980, "A Method for Determining the Compatibility of Hazardous Wastes," EPA/600/2-80-076, California Department of Health Services and the U.S. Environmental Protection Agency, Office of Research and Development, 1980.

EPA, 1992, "EPA Specifications and Guidance for Contaminant-Free Sample Containers," Directive No. 9240.0-5A, U.S. Environmental Protections Agency, Office of Solid Waste and Emergency Response, December 1992.

EPA, 1994a, "Waste Analysis at Facilities that Generate, Treat, Store, and Dispose of Hazardous Waste, a Guidance Manual," OSWER 9938.4-03, U.S. Environmental Protections Agency, Office of Solid Waste and Emergency Response, April 1994.

EPA, 1994b, "EPA Laboratory Guidelines for Evaluating Organics Analyses," EPA/540/R/94/082, U.S. Environmental Protection Agency, Office of Solid Waste and Emergency Response, December 1994.

EPA, 1994c, "Laboratory Data Validation Functional Guidelines for Evaluating Inorganics Analyses," EPA/540/R/94/083, U.S. Environmental Protections Agency, December 1994.

EPA, 1995, "Test Methods for Evaluating Solid Waste, Physical/Chemical Methods," SW-846, Third Edition, Final Update I and Final Update II, U.S. Environmental Protections Agency, Office of Solid Waste and Emergency Response, 1995.

EPA, 1997, "Test Methods for Evaluating Solid Waste, Physical/Chemical Methods," SW-846, Rev. 2, Third Edition, including Final Update III, U.S. Environmental Protection Agency, Office of Solid Waste and Emergency Response, 1997.

NMED, 1999, "Waste Isolation Pilot Plant (WIPP) Hazardous Waste Facility Final Permit," New Mexico Environment Department, Permit No. NM4890139088-TSDF, October 27, 1999.

NRC Docket No. 71-9218, 2001, "Safety Analysis Report for the TRUPACT-Il Shipping Package (SARP)," U.S. Nuclear Regulatory Commission, May 2001.

Public Law 102-386, Title 1, 1992, "Federal Facility Compliance Act," U.S. Environmental Protection Agency, October 6, 1992.

RCRA, Part B Permit, 1997, "Application for the Waste Isolation Pilot Plant," Revision 6.5, U.S. Department of Energy, 1997.

F. GLOSSARY

F-0 Acronyms and Abbreviations

ACL	Analytical Chemistry Laboratory
AK	acceptable knowledge
AMWTP	Advanced Mixed Waste Treatment Project
ASTM	American Society for Testing and Materials
BDR	Batch Data Report
°C	degrees Celsius
%C	percent complete
CAR	corrective action report
CCP	Central Characterization Project
CFR	Code of Federal Regulations
CH	contact-handled
CH-TRU	contact-handled transuranic
CIS	Characterization Information Summary
DOE	U.S. Department of Energy
DOT	U.S. Department of Transportation
DQO	Data Quality Objective
EPA	Environmental Protection Agency
g	gram
HWN	EPA hazardous waste number
IDC	item description code
IDL	instrument detection limit
INL	Idaho National Laboratory
INST	instruction
ITR	independent technical review
kg	kilogram
L	liter
LCS	Laboratory Control Sample
LDR	land disposal restriction
µg/L	micrograms per liter
MDL	method detection limit
mg/kg	milligrams per kilogram

mL	milliliter
mm	millimeter
mm Hg	millimeters mercury
MP	management procedure
MSD	matrix spike duplicate
NCR	nonconformance report
NDE	nondestructive examination
ng	nanogram
NIST	National Institute of Standards and Technology
NMAC	New Mexico Administrative Code
NMED	New Mexico Environment Department
OLCS	on-line control sample
OJT	on-the-job training
OVA	organic vapor analyzer
PCB	polychlorinated biphenyl
POC	pipe overpack container
ppm	parts per million
ppmv	parts per million by volume
psig	pounds per square inch gauge
pt	point
QA	quality assurance
QAO	Quality Assurance Objective
QA/QC	Quality Assurance/Quality Control
QAPD	Quality Assurance Program Document
QAPjP	Quality Assurance Project Plan
QC	quality control
r	regression coefficient
%R	percent recovery
%RSD	percent relative standard deviation
RA	radioassay
R&D	research and development
RCRA	Resource Conservation and Recovery Act
RH	remote-handled
RIDS	Records Inventory and Disposition Schedule
RRF	relative response factor
RTR	real-time radiography
RWMC	Radioactive Waste Management Complex
SPM	Site Project Manager
SPO	Site Project Office

TRU	transuranic
TRUCON	TRUPACT-II Content Codes (DOE 1992)
TRUPACT-II	Transuranic Package Transporter Model II
TSDF	Treatment, Storage, and Disposal Facility
VE	visual examination
VEE	Visual Examination Expert
WAC	waste acceptance criteria
WDS	Waste Data System
WIPP	Waste Isolation Pilot Plant
WIPP-WAP	Waste Analysis Plan for the Waste Isolation Pilot Plant, Attachment C of the WIPP Hazardous Waste Facility Permit
WSPF	Waste Stream Profile Form
WTS	Waste Tracking System
WWIS	WIPP Waste Information System

TRU Waste Certification

Advanced Mixed Waste Treatment Project

Approval:

(Signature on file. See DCR-11991.)

05/02/13
Date

REVISION LOG

Revision Number	Date Approved	Pages Affected	Description of Revision
0	08/29/02	All	Initial issue. DCR-1379.
1	12/10/02	11, 15-16	DCR-1790. Changed revision number from 0 to 1. Added clarification.
2	12/24/02		DCR-1841. Changed revision number from 1 to 2. Better define data gathering and documentation.
3	02/24/03	Various	DCR-1943. CBFO comment resolution and removed procedures that described WTS Certification/Transportation processes.
4	02/27/03	9	DCR-2084. Added NOTE on page 9 for closure of WIPP audit concern.
5	03/28/03	All	DCR-2163: Change effective date from "When DOE Approved Retrieval Operations" to March 28, 2003.
6	04/27/04	All	DCR-2867: Change WCO or TCO to WCO/TCO and to comply with e-TRAMPAC and WWIS operating procedures, and to implement corrective actions from CAR-4465.
7	07/12/04	Various	DCR-2994: Changes to incorporate WIPP comments and Direct Loading of Ten-Drum Overpack.
8	08/04/04	Various	DCR-4005: Incorporate CBFO comments.
9	08/12/04	9, 17, 36	DCR-3242: Incorporate CBFO comments.
10	11/4/04	Pages 13 and 19	DCR-3342. Added new Steps 4.2.2.19, 4.2.2.20, 4.3.4.19, and 4.3.4.20 to provide direction for performance of a management assessment of the waste container data report.
11	12/09/04	Various	DCR-3268. Implement WWIS Release 5.0, CH WAC (Rev 2), CH-TRAMPAC (Rev 1) requirements and editorial changes. Incorporation of DRR comments.

Revision Number	Date Approved	Pages Affected	Description of Revision
12	01/11/05	Various	DCR-4061. Implement instruction for the use of the Off-Site Shipping Module of WTS.
13	07/07/05	Various	DCR-4258. Delete steps that are no longer required based on management review of past assessments. Incorporate FC-1, DCR-4322.
14	07/27/05	Various	DCR-4448. Minor change to correct step references.
15	10/26/05	3.3.1.2.16	DCR-4494. Incorporate FC-1 Added step for NCR checks.
16	12/14/05	All	DCR-4659. Periodic review. Entire document revised to separate the manual certification process from the OSM process. Since the entire document was changed, no change bars were used except in this table.
17	02/15/06	Various	DCR-4746. Periodic review. Remove Item #8 from the Container Data Package contents; include tare mass for a TDOP (725.6 kg). Revise Roles and Responsibilities Section to add WCCA. Revised note in 3.2.3.7.4. Minor editing and formatting corrections.
18	5/18/06	Various	DCR-4916. Added Section 3.2.8, and added various additional steps and notes to facilitate the shipping of controlled shipments. Some minor editorial clarifications in various steps.
19	06/28/06	All	DCR-5097. Added new section 3.3 and made numerous additional changes to support OSM implementation.
20	11/13/06	Various	DCR-5475. Revise to remove “Contact-Handled” from references to MP-TRUW-8.1, with various editorial changes made globally. Add steps under WCO on pages 33 and 38.
21	02/14/07	Various	DCR-5742. Revise Table 1, Item 7 to reference Forms-1597, -1598. Form-1693 no longer used.

Revision Number	Date Approved	Pages Affected	Description of Revision
22	07/24/07	ALL	DCR-6013. Cancel MP-TRUW-8.16 and incorporate into MP-TRUW-8.5.
23	03/28/08	Various	DCR-6301. Added CCP review of flammable gas analysis. Clarified steps, changed notes to steps, and incorporated resolution to internal comments.
24	09/08/08	All	DCR-7197. Eliminated AMWTP sampling allowances. Standardized logic. Made changes associated with the corrective actions for CAR 40148.
25	12/02/09	All	DCR-7689. Entire document revised. Implemented changes to accommodate the new Waste Data System. Revised roles and responsibilities. Introduced more sections to provide clarification to users. Added section on Direct Load Standard Waste Box roll-up functionality. Addressed recommended changes in MAR 36576. Made additional changes in response to CBFO comments. Periodic review.
26	02/06/12	Various	DCR-10680. Changes made to match updated WDS fields and to clarify ambiguities. Some changes related to SCR-4287. Reorganized reference section. Incorporated ITG Bluesheet 078.
27	07/03/12	Pg 3, 14, 15, 19	DCR-11010. Changed the title to Section 3.5 for clarity. Added new note 2 on page 3 for acknowledging SCR 4032 data roll-up capabilities for certifiable containers (note subsequently deleted due to QA comments during review process).
28	09/10/12	Various	DCR-11547. Added step for verification of manual ASY batch results (Change consistent with MP-TRUW-8.11).
29	05/02/13	Various	DCR-11991. Chemical sampling requirements removed due to permit modification accepted by NMED 03/13/2013.

TABLE OF CONTENTS

1.0 PURPOSE/SCOPE 1

2.0 ROLES AND RESPONSIBILITIES 2

3.0 PROCEDURE 3

3.1 Prerequisites 3

3.2 Manual Characterization Data Entry and Review Using the WTS WCDEF and WDS 4

3.3 WCDEF Initial Container Review 8

3.4 WCDEF Certification Review and Submittal to WDS 11

3.5 WCDEF Product Drum Roll-up for Direct Load Standard Waste Box 14

3.6 Offsite Shipping Module Initial Container Review 15

3.7 OSM Container Data Extract to the WDS 17

3.8 OSM Certification Review and Submittal to the WDS 18

3.9 Container Issue Resolution Process 20

4.0 DEFINITIONS 21

5.0 REFERENCES 22

6.0 RECORDS 23

7.0 EXHIBITS 23

8.0 APPENDICES 23

Appendix A – Tables A1

Appendix B – Guidelines for Determination of Manual or EV&V QA Records B1

1.0 PURPOSE/SCOPE

The purpose of this procedure is to summarize the method used by the Advanced Mixed Waste Treatment Project (AMWTP) to certify waste as compliant with MP-TRUW-8.1, Certification Plan for INL Transuranic Waste, and CCP-PO-003, CCP Contact-Handled Transuranic Waste Authorized Methods for Payload Control (CCP CH-TRAMPAC), for transportation, storage, and disposal of contact-handled transuranic (CH-TRU) waste at the Waste Isolation Pilot Plant (WIPP). Certification of *payload containers* (see def.) provides confidence for both the shipper and receiver that the WIPP requirements are met.

Before submitting any certification container data to the *Waste Data System* (WDS; see def.), AMWTP submits a Waste Stream Profile Form (WSPF) for each waste stream to be sent to WIPP. The WSPFs provide summary information about each waste stream. The WDS Characterization Data Entry function accepts the container-specific data that are the basis for the summary information included in the WSPF. The characterization data submitted will be reviewed and compared to the pending WSPF by the Carlsbad Field Office (CBFO). When a WSPF has been approved and AMWTP has received a signed letter from CBFO approving the waste stream, the approval date will be entered into the WDS, which allows entry of the certification data. The *Waste Certification Official* (WCO; see def.) certifies that each waste payload container meets the certification requirements (outlined in MP-TRUW-8.1) before submitting the data to the WDS. WIPP will not accept shipments for disposal if the waste container information has not been correctly submitted and approved by a WDS Data Administrator (DA). The WDS User's Manual provides the information needed by AMWTP to perform tasks associated with transmittal of the container's characterization and certification information to WIPP.

2.0 ROLES AND RESPONSIBILITIES

Performer	Responsibilities
Acceptable Knowledge Expert (AKE)	• Performs the electronic data reconciliation/characterization of the containers per MP-TRUW-8.11, Data Reconciliation.
Site Project Manager (SPM)/Designee	• Performs data reconciliation/characterization of the containers per MP-TRUW-8.11 • Reviews the site Quality Assurance Project Plan and subsequent quality assurance/quality control (QA/QC) activities • Verifies that QA requirements have been implemented • Provides guidance to the project staff on quality related matters • Reviews the WDS container data report to the actual characterization data for each container contained in the WSPF summary.
WCO	• Documents and certifies that all transuranic (TRU) waste payload containers prepared for shipment to WIPP meet all requirements specified in the Certification Plan for INL Transuranic Waste (MP-TRUW-8.1) and CCP-PO-003 (CCP CH-TRAMPAC) and transmits the waste container data to the WDS • Performs all WDS responsibilities • May function as an independent WCO to review other WCOs' work • Responsible for all necessary data entry into the Waste Container Data Entry Form (WCDEF), Offsite Shipping Module (OSM), or WDS.

Performer	Responsibilities
Subject Matter Expert (SME) (or Alternate)	• Responsible for certification and documentation of all TRU waste payload containers prepared for shipment to WIPP subject to requirements specified in the Certification Plan for INL Transuranic Waste (MP-TRUW-8.1) and CCP-PO-003 (CCP CH-TRAMPAC) • Ensures WCOs are trained adequately to execute their assigned roles • Performs evaluations on unsuccessful data conversion errors • Ensures technical accuracy of the certification process • Notifies the WIPP DA if personnel who have received access approval are no longer required to have access to the WDS, or need to change the type of access to the WDS.

NOTE: *Container issues occurring at any time in this procedure can be handled with Section 3.9.*

3.0 PROCEDURE

3.1 Prerequisites

3.1.1 Access Authorizations

NOTE: *Requests for WDS access will be handled in accordance with Section 4.0 of the WDS User's Manual.*

3.1.1.1 SME (or Alternate): Contact WDS DAs via e-mail to request, rescind, or change any access authorization.

3.1.1.2 Submit a WIPP WDS Access Request Form containing relevant user and sponsor information and signatures to the WDS DAs in order to acquire a WDS account.

3.1.2 Training

NOTE: *At a minimum, training includes initial on-the-job WDS orientation and knowledge of requirements from the following documents:*

- *MP-TRUW-8.1, Certification Plan for INL Transuranic Waste*
- *MP-TRUW-8.2, Quality Assurance Project Plan*
- *CCP-PO-003, CCP Contact-Handled Transuranic Waste Authorized Methods for Payload Control (CCP CH-TRAMPAC)*
- *DOE/WIPP-02-3122, Transuranic Waste Acceptance Criteria for the Waste Isolation Pilot Plant*
- *NM4890139088 WAP, WIPP Hazardous Waste Permit Analysis Plan*
- *DOE/WIPP-09-3427, Waste Data System (WDS) User's Manual.*

3.1.2.1 SME (or Alternate): Ensure that personnel receive on-the-job training (OJT) specific to the WDS.

3.1.2.1.1 Ensure that personnel receive training on the contents of the WDS User's Manual as a required reading OJT activity.

3.1.2.1.2 Ensure WCO personnel are properly trained and qualified.

3.2 Manual Characterization Data Entry and Review Using the WTS WCDEF and WDS

NOTE 1: *SPM/designee verification of container-affecting nonconformance reports (NCRs) will be documented using Form-1597, Reconciliation with Data Quality Objectives, and will be verified current and clear in TrackWise or the TrackWise NCR Quick Search before loading or submittal into the WDS.*

NOTE 2: *Data not transferred to the WDS Characterization Data Entry function using the WCDEF will be entered manually.*

NOTE 3: *Any container with unresolved discrepancies associated with hazardous waste characterization will not be managed or disposed of at WIPP until discrepancies are resolved.*

NOTE 4: *Once a WSPF is approved, additional waste container information must be submitted through the WDS Certification Data Entry function.*

NOTE 5: *The QA record will be used for data review. The QA record for manually validated batch data reports or manually generated forms will be accessed directly or through the Electronic Document Management System (EDMS). The Waste Tracking System (WTS) will be referenced to ensure the latest valid data are being reviewed. For electronic validation and verification (EV&V), the QA record will be accessed and viewed in the WTS. Appendix B contains guidelines on using manual or EV&V records.*

3.2.1 SME: Ensure the SPM/designee has provided the Waste Stream Profile information to WDS personnel for creation of the appropriate WDS reference tables so that characterization data can be submitted into WDS.

3.2.2 Obtain a list of specific containers from the SPM/designee that was used as the basis for the summary information included in the WSPF.

3.2.3 SPM/Designee: Ensure there are no open AMWTP NCRs against any container being reviewed at this level.

3.2.4 Ensure that each of the containers has been validated and reconciled in accordance with MP-TRUW-8.11.

3.2.5 WCO: Create container file folders.

3.2.6 Ensure reconciliation is complete for all containers identified.

3.2.6.1 Ensure all containers listed in the *Characterization Information Summary* (CIS; see def.), including applicable inner containers, correspond with the QA record.

3.2.6.2 Ensure that all batches listed on the CIS correspond with QA record.

3.2.7 Log on to WTS, query and/or enter characterization data into the WCDEF for each container in the WSPF summary using the QA record.

3.2.8 When it is determined that all data in the WCDEF are certifiable and correspond with the QA record, perform the following:

3.2.8.1 Click the "Save All" button at the top of the WCDEF.

3.2.8.2 Print a copy and place it in the associated certification file to evaluate later during a certification review.

3.2.8.3 Sign the Container Review Statement only.

3.2.9 Transfer the data into the WDS by pressing the "Load to WDS" button, ensuring it is selected for the "Container Characterization Data Submittal" screens.

3.2.9.1 If the data transfer fails, determine the cause of the failure, attempt to resolve the problem, and retransfer the container data.

3.2.9.2 If the problem persists, give the container number/certification file to the SME for resolution.

3.2.10 Access the WDS by entering the appropriate URL into an acceptable browser (per the WDS User's Manual) and entering your authorized username and password.

NOTE 1: *Any time after the shipper site identification (ID), waste stream profile, container number, and container type have been entered, the container record may be saved. A previously saved (but not yet submitted) container record may be queried at any time to continue data entry.*

NOTE 2: *The data in the WDS must match the most current WSPF.*

NOTE 3: *When container data is transferred, only the data needed for characterization will load into the characterization statuses.*

3.2.11 Complete any required container characterization data entry into the WDS, if necessary.

3.2.12 Independent WCO: Perform an independent review of container characterization data in the WDS to the QA record.

3.2.13 When it is determined that all data in the WDS are complete and correspond with the QA record, complete Form-1936, Container Data Approval, sign and date the data entry review statement and place it in the associated certification file.

3.2.14 WCO: Print the (PRESUB_CHARZ) container data report by clicking on the "View PDF" link and executing the print icon command from the tool bar.

3.2.15 Place the container data report in the associated file and notify TRU Programs that a container is available for data approval review.

3.2.16 SPM/Designee: Review the data entered into the WDS by comparing the WDS (PRESUB_CHARZ) container data report with the QA record.

3.2.17 When it is determined that all data in the WDS are complete and correspond with the QA record, then indicate approval by signing and dating the data approval statement on Form-1936 and placing the form in the associated certification file.

3.2.18 Return container certification file(s) to the certification department.

NOTE: *Characterization containers may be submitted to the WDS for characterization approval if and when authorization is given from the SPM.*

3.2.19 WCO: If notification of approval has been received from the SPM, then submit the container data to the WDS by pressing the "Submit for Approval" button.

NOTE: *The WDS provides a status for each container to the individual who performed the transfer.*

3.2.20 If a container fails submittal, then perform the following:

3.2.20.1 Attempt to resolve evaluation failures and or data transfer issues.

3.2.20.2 If the problem persists, give the container number/file and any other helpful information to the SME to work through Section 3.9.

3.2.21 Finalize container records by ensuring that the current WDS status shows approved characterization and by preparing the WDS Container Data Entry Report for the associated certification file.

3.3 WCDEF Initial Container Review

NOTE 1: *SPM/designee verification of container-affecting NCRs will be documented using Form-1597 and will be verified current and clear in TrackWise or the TrackWise NCR Quick Search before loading into the WDS. TrackWise is the QA record for NCRs.*

NOTE 2: *The QA record will be used for data review. The QA record for manually validated batch data reports or manually generated forms will be accessed through EDMS, and WTS will be referenced to ensure the latest valid data is being reviewed. For EV&V, the QA record will be accessed and viewed in the WTS. Appendix B contains guidelines on using manual or EV&V records.*

NOTE 3: *Containers showing a "MIXED" status in the "LLD Function" field in the "SCL" screen in WTS are evaluated with the Super High-Efficiency Neutron Counter (SuperHENC) analysis, manually reconciled, and indicated in a CIS with the batch number formatted as "INNDA . . ."*

NOTE 4: *Central Characterization Project (CCP) will be responsible for flammable gas sampling data and the following fields from Table 2: Shipping Category, Closure Date, Vent Date, Aspiration Method, Quantity Installed, Filter Model, and Filter Install Date.*

NOTE 5: *Candidate containers for data entry into the WDS and eventual certification review will be received through notification from the SPM office and documented with Form-1597 and Form-1598, Characterization Information Summary Report.*

NOTE 6: *Direct-load standard waste box (DLSWB) container reviews take into account the review of all inner containers with respect to all steps in this section.*

3.3.1 WCO: Do not enter any container certification data into the WDS or transfer data to WIPP until the associated WSPF is approved by CBFO.

3.3.2 Create container file folders.

3.3.3 Perform an initial review of a candidate container for potential loading into the WDS by comparing the WCDEF data screens with the QA record.

3.3.3.1 Review all AMWTP container NCRs to investigate specific container history or issues and to ensure that no NCRs are open.

3.3.3.2 Log on to WTS and query container information into the WCDEF.

NOTE 1: *The derived radiological properties (decay heat, total ^{239}Pu fissile gram equivalence, TRU alpha activity, TRU alpha activity concentration, their associated Total Measurement Uncertainty (TMU), and the total ^{239}Pu equivalent activity) are calculated within the WCDEF. Insignificant TMU discrepancies may exist between the WCDEF and the SuperHENC Data Report. Both TMU calculations are being done in accordance with CBFO-approved algorithms.*

NOTE 2: *A discrepancy may be corrected by anyone qualified to complete the WCDEF. The form may be reprinted if necessary.*

NOTE 3: *EDMS is accessed via our internet home page in the drop-down menu, Documentation - EDMS.*

NOTE 4: *Containers used as the basis for characterization data entry or DLSWB roll-up may already have a printed copy of the WCDEF in the associated certification file to be used during the initial review for certification.*

3.3.3.3 If container has a SuperHENC data report, then manually enter radionuclides into WCDEF.

3.3.3.4 Delete container temp table information within the WCDEF, unless it is necessary to preserve previously entered data.

3.3.3.5 Ensure that the Project Level Review and reconciliation of each container is complete by checking for receipt and completeness of Form-1597 and Form-1598.

3.3.3.5.1 Ensure that all container IDs listed in the CIS, including applicable inner containers, legitimately exist and correspond with the QA record.

3.3.3.5.2 Ensure that all batch IDs listed in the CIS legitimately exist and correspond with the QA record.

3.3.3.6 Compare EDMS with WTS to ensure the most current data have been used for reconciliation.

3.3.3.7 When it is determined that all data in the WCDEF are certifiable and correspond with the QA record, click the "Save All" button at the top of the WCDEF, print (if necessary), sign and date the WCDEF, OR e-sign and save, to confirm the initial review status of the container.

NOTE: *Containers used as the basis for characterization data entry will already be loaded into WDS with initial data review completed.*

3.3.3.8 Transfer container data into the WDS by pressing the "Load to WDS" button.

3.3.3.8.1 If the data transfer fails, attempt to resolve the problem, and retransfer the container data by pressing the "Load to WDS" button.

3.3.3.8.2 If the problem persists, give the container number/file to the SME to work through Section 3.9.

3.3.4 WCO/SME: If necessary, submit DLSWB .pdf copies of the following forms to the CCP Waste Project Certification Manager or WCO for any AMWTP DLSWBs loaded into the WDS:

- Form-1219, SWB Direct-Loaded Container Data Sheet
- Form-1362, Container Integrity Inspection

- Form-1363, SWB Direct-Loaded Container
- Form-1775, SWB Direct Loading Form
- Form-2003, SWB Direct-Loaded Container in Soft-Sided Containments.

3.4 WCDEF Certification Review and Submittal to WDS

NOTE 1: *CCP flammable gas data is considered complete and accurate based on the fact that the CCP program and personnel are certified and qualified. Final container review can continue upon e-mail notification from CCP that the flammable gas data is entered into the WDS and there are no open CCP NCRs or corrective action requests (CARs) for the containers.*

NOTE 2: *In addition to the flammable gas sampling data, CCP will be responsible for the following fields from Table 2: Shipping Category, Closure Date, Vent Date, Aspiration Method, Quantity Installed, Filter Model, and Filter Install Date.*

NOTE 3: *Containers showing a "MIXED" status in the "LLD Function" field in the "SCL" screen in WTS shall be evaluated with the SuperHENC analysis, manually reconciled, and indicated in a CIS with the batch number formatted as "INNDA . . ."*

NOTE 4: *The QA record will be used for data review. The QA record for manually validated batch data reports or manually generated forms will be accessed through EDMS. WTS will be referenced to ensure the latest valid data is being reviewed. For EV&V, the QA record will be accessed and viewed in the WTS. Appendix B contains guidelines on using manual or EV&V records.*

NOTE 5: *SPM/designee verification of container-affecting NCRs will be documented using Form-1597 and will be verified current and clear in TrackWise or the TrackWise NCR Quick Search before submittal into the WDS. TrackWise is the QA record for NCRs.*

NOTE 6: *Direct-load standard waste box container reviews take into account the review of all inner containers with respect to all steps in this section.*

3.4.1 Independent WCO: Ensure container compliance with MP-TRUW-8.1 and CCP-PO-003 by comparing the WDS Container Data/Report with the QA record.

3.4.1.1 Access the WDS by entering the appropriate URL into an acceptable browser (per the WDS User's Manual) and entering your authorized username and password.

3.4.1.2 Ensure CCP NCR/CAR notification is current and clear.

3.4.1.3 Review all AMWTP container NCRs to investigate specific container history or issues and to ensure that no NCRs are open.

3.4.1.4 Ensure the Project Level Review and reconciliation of each container is complete by checking for receipt and completeness of Form-1597 and Form-1598.

3.4.1.4.1 Ensure all container IDs listed in the CIS, including applicable inner containers, legitimately exist and correspond with the QA record.

3.4.1.4.2 Ensure all batch IDs listed in the CIS legitimately exist and correspond with the QA record.

3.4.1.5 If a discrepancy is found during the review, notify the SME and inform the original reviewer of the discrepancy.

3.4.1.6 If the data are certifiable and correspond with the QA record, then sign and date (or e-sign and save) the WCDEF *Certification Statement* (see def.), and print if necessary to complete the record.

NOTE: *Data submitted to the WDS will automatically initiate the certification edit limit checks and the appropriate TRUPACT-II Authorized Methods for Payload Control (TRAMPAC) evaluation.*

3.4.1.7 Enter the certification date in WDS, and submit the container for the WDS DA's approval by pressing the "Submit for Approval" button.

3.4.1.8 If a container fails submittal, then perform the following:

3.4.1.8.1 If the error is related to CCP data, either give the container number/file to the SME to work through Section 3.9, or attempt to resolve the evaluation failures and/or data transfer issues.

3.4.1.8.2 If the problem persists, give the container number/file and any other helpful information to the SME to work through Section 3.9.

3.4.2 WCO: Finalize container records by ensuring the current WDS status shows approved or beyond and preparing the WDS Container Data Entry Report for the record.

3.4.2.1 Ensure data entry form/certification statement, CCP NCR check, and any other relevant documents generated from this procedure (as referenced in Section 6.0) are present, complete, and logical.

3.4.3 Complete Form-1044, Record Transmittal, and submit all manually generated quality records to data management.

3.5 WCDEF Product Drum Roll-up for Direct Load Standard Waste Box

NOTE: *Inner container numbers for a DLSWB are indicated on the CIS and are independently verified with the SWB planning and loading forms, which consist of AMWTP Forms-1775, -1219, -1362, and -1363. These forms are received from operations, scanned into EDMS, and are the quality record for both AMWTP and CCP to demonstrate compliance for certification.*

3.5.1 WCO: Ensure the latest data is in the temp tables for the inner containers to be rolled up by verifying the SPM-approved batch data report (BDR) information is what is populated into the WCDEF for that container.

3.5.1.1 When necessary, delete each inner container in the "Container Data" tab before performing a re-query.

3.5.2 Go to the "Roll Up Values" tab in the WCDEF via the drop down menu, Offsite Shipping, Certification, Manual WDS Certification Data Entry.

3.5.3 Enter the DLSWB container number in the "Outer Container ID" field.

3.5.4 If the SWB inner containers were evaluated with the SuperHENC, check the "SuperHENC Assayed?" box directly beside the "Outer Container ID" field.

3.5.5 Query WTS for available containers while in the "Roll Up Values" tab and verify the table populates.

3.5.6 Press the "Perform Roll Up" button and acknowledge the warning(s) and/or message(s) of the current status of the rolled up container.

3.5.7 Press "Save All" in the WCDEF and print, if necessary, for certification file.

NOTE 1: *No changes can be made to a candidate container's WCDEF radionuclides/calculations or waste material parameters from here on in the DLSWB review process, or Section 3.5 will need to be repeated.*

NOTE 2: *DLSWB containers needing certification review are received after project reconciliation through the normal notification process and are reviewed through Section 3.3 of this procedure.*

3.5.8 Notify the Reconciliation Department which DLSWB(s) are ready for reconciliation.

3.6 Offsite Shipping Module Initial Container Review

NOTE 1: *Candidate containers for data entry into the WDS and eventual certification review will be documented on the "Reconciliation with Data Quality Objectives" report located in the "DQO Reconciliation" screen in WTS. SPM/designee verification of container-affecting NCRs will be documented in the "DQO Reconciliation" screen as well. NCRs will be verified current and clear in TrackWise or the TrackWise NCR Quick Search before transfer into the WDS.*

NOTE 2: *CCP will be responsible for flammable gas sampling data and the following fields from Table 2: Shipping Category, Closure Date, Vent Date, Aspiration Method, Quantity Installed, Filter Model and Filter Install Date.*

NOTE 3: *The QA record will be accessed and viewed in the WTS.*

NOTE 4: *Direct-load standard waste box container reviews take into account the review of all inner containers with respect to all steps in this section.*

3.6.1 Do not enter any container certification data into the WDS or transfer data to WIPP until the associated WSPF is approved by CBFO.

3.6.2 WCO: Create container file folders.

3.6.3 Perform an initial review of a candidate container for entry into the WDS.

3.6.3.1 Review all AMWTP container NCRs to investigate specific container history or issues and to ensure that no NCRs are open.

NOTE: *The listing of containers in the OSM can be queried on Container ID number, Container Type, Item Description Code, Generator ID, and/or Waste Stream.*

3.6.3.2 Log on to WTS and select the "Offsite Shipping/Certification/Container Certification" menu to query containers.

3.6.3.3 If not already populated, type in the Waste Acceptance Criteria (WAC) revision number for which the containers are being evaluated.

3.6.3.4 Select the "Perform Edit & Limit Checks" boxes next to the containers to be certified, and perform the Edit & Limit checks.

NOTE: *Container IDs that pass the checks will turn green and those that fail will turn red.*

3.6.3.5 If a container fails the "Edit and Limit Checks," evaluate with the "Edit and Limit Errors" button and attempt to correct those errors.

3.6.3.6 If the problem persists, give the container number/file to the SME to work through Section 3.9.

3.6.3.7 View the "WIPP Comments" button within each individual container data screen to ensure that any comments that may have been previously entered are still accurate and/or add comments relevant to the container certification record.

3.6.3.8 Ensure that the Project Level Review and reconciliation of each container is complete by checking for the presence and completeness of the "Data Quality Objectives Reconciliation" screen via the WTS drop-down menu, Offsite Shipping, AK Characterization, DQO Reconciliation.

3.6.3.8.1 Ensure all container IDs listed on the CIS, including applicable inner containers, legitimately exist and correspond with the QA record.

3.6.3.8.2 Ensure all batch IDs listed on the CIS legitimately exist and correspond with the QA record.

NOTE: *E-signing for initial review status locks the container's data so that it cannot be altered and allows the data to be extracted. It does not indicate that the container data has been certified.*

3.6.3.9 If the container data are certifiable and correspond with the QA record, then sign (or e-sign and save) to complete the initial review status and quality record.

3.6.3.10 When all desired containers have been reviewed, exit the screen.

3.7 OSM Container Data Extract to the WDS

NOTE 1: *The listing of containers in OSM can be queried based on Container ID, Item Description Code, Waste Matrix Code, CH-TRUCON Code, Waste Stream Profile or Waste Stream Profile Approval date.*

NOTE 2: *A container may belong to only one Certification Data extract.*

3.7.1 WCO: Log on to WTS to access the "Extract Certification Data" screen via the drop-down menu, Off Site Shipping, Certification, Extract Certification Data and query to an available parameter.

NOTE: *All NCR searches are conducted during the container review process and are verified current and clear before any container data transfer or submittal into the WDS.*

3.7.2 Select containers to extract to the WDS by checking the select box to the left of the container numbers and pressing the "Extract Certification Data" button.

3.7.3 If data extract fails, attempt to resolve the problem, re-extract, and/or give the container number/file to the SME to work through Section 3.9.

3.8 OSM Certification Review and Submittal to the WDS

NOTE 1: *SPM/designee verification of container-affecting NCRs will be documented with the "Reconciliation with Data Quality Objectives" report located in the "DQO Reconciliation" screen in WTS, and will be verified current and clear in TrackWise or the TrackWise NCR Quick Search before copy or submittal into the WDS. TrackWise is the QA record for NCRs.*

NOTE 2: *CCP flammable gas data is considered complete and accurate based on the fact that the CCP program and personnel are certified and qualified. Final container review can continue upon e-mail notification from CCP that the flammable gas data is entered into the WDS and there are no open CCP NCRs or CARs for the containers.*

NOTE 3: *In addition to the flammable gas sampling data, CCP will be responsible for the following fields from Table 2: Shipping Category, Closure Date, Vent Date, Aspiration Method, Quantity Installed, Filter Model, and Filter Install Date.*

NOTE 4: *The QA record will be accessed and viewed in the WTS.*

NOTE 5: *Direct-load standard waste box container reviews take into account the review of all inner containers with respect to all steps in this section.*

3.8.1 Independent WCO: Ensure container compliance with MP-TRUW-8.1 and CCP-PO-003 by comparing the WDS Container Data Report with the QA record.

3.8.1.1 Access the WDS by entering the appropriate URL into an acceptable browser (per the WDS User's Manual) and entering your authorized username and password.

3.8.1.2 Ensure CCP NCR/CAR notification is current and clear.

3.8.1.3 Review all AMWTP container NCRs to investigate specific container history or issues and to ensure that no NCRs are open.

3.8.1.4 Ensure that the Project Level Review and reconciliation of each container is complete by checking for the presence and completeness of the Data Quality Objectives Reconciliation" screen via the WTS drop-down menu, Offsite Shipping, AK Characterization, DQO Reconciliation.

3.8.1.4.1 Ensure all container IDs listed in the CIS, including applicable inner containers, legitimately exist and correspond with the QA record.

3.8.1.4.2 Ensure all batch IDs listed in the CIS legitimately exist and correspond with the QA record.

3.8.1.5 If a discrepancy is found during the review, notify the SME and inform the original reviewer to correct the discrepancy.

3.8.1.6 If the data are certifiable and correspond with the QA record, sign and date the OSM Certification Statement and print, if necessary, to complete the record.

NOTE: *Data submitted to the WDS will automatically initiate the certification edit limit checks and the appropriate TRAMPAC evaluation.*

3.8.1.7 Enter the certification date in WDS and submit the container for the WDS DA's approval by pressing the "Submit For Approval" button.

3.8.1.8 If a container fails submittal, then perform the following:

3.8.1.8.1 If the error is CCP data related, either give the container number/file to the SME to work through Section 3.9, or attempt to resolve the evaluation failures and/or data transfer issues.

3.8.1.8.2 If the problem persists, give the container number/file and any other helpful information to the SME to work through Section 3.9.

3.8.2 WCO: Finalize container records by ensuring the current WDS status shows approved or beyond and preparing the WDS Container Data Entry Report.

3.8.2.1 Ensure data entry form/certification statement, CCP NCR check, and any other relevant documents generated from this procedure (as referenced in Section 6.0) are present, complete, and logical.

3.8.3 Complete Form-1044 and submit the quality record(s) to data management.

3.9 Container Issue Resolution Process

3.9.1 SME: Determine the reason for container issues, taking the following steps as appropriate:

NOTE 1: *Certification statement e-signatures must be inactivated before initial review e-signatures can be inactivated.*

NOTE 2: *The inactivation of any e-signature will require a comment explaining the reason for the inactivation.*

3.9.1.1 Direct the inactivation of container e-signatures, correction of container data, or initiation of rework, as necessary.

3.9.1.2 Initiate an NCR in accordance with MP-Q&SI-5.4.

3.9.1.3 Make appropriate notification to affected groups if container requires rework.

3.9.1.4 Resolve the NCR in accordance with MP-Q&SI-5.4.

3.9.1.5 After all errors and/or NCRs have been resolved, initiate rework of the containers.

3.9.1.6 Ensure that the quality record is current and/or updated.

4.0 DEFINITIONS

Certification Statement. Certification documentation required to ensure payload containers are in compliance with the certification requirements (MP-TRUW-8.1).

Characterization Information Summary. Summarized characterization information required for submittal to CBFO accompanying the Waste Stream Profile Form.

CH-TRAMPAC Evaluation Software. This software performs container and payload compliance evaluations against rules and regulations defined in the CH-TRAMPAC document. This system was previously called WTES and e-TRAMPAC.

Payload Container. The outer-most container (i.e., drum, SWB, TDOP) for TRU waste material that is placed in a reusable Type B shipping container (i.e., TRUPACT-II, HalfPACT) for transport.

Waste Certification Official. Individual designated to document and certify that all TRU waste payload containers prepared for shipment to WIPP meet all requirements specified in the Certification Plan for INL Transuranic Waste (MP-TRUW-8.1), and submits the waste container data to the WDS DA.

Waste Data System. A computerized data management system (formerly known as the WIPP Waste Information System, or WWIS) used by WIPP to gather, store, and process information pertaining to CH-TRU waste destined for disposal at the WIPP. The WDS contains functionality beyond the original scope of WWIS, but whenever this procedure refers to the WDS, it shall be known that for purposes of reporting permit information to WIPP, WWIS is within the WDS. It is AMWTP's position that steps in this procedure requiring data entry into the WDS will comply with and fully satisfy corresponding requirements that still obligate AMWTP to enter data into WWIS.

5.0 REFERENCES

NOTE: *The WIPP Quality Assurance Program Document (QAPD), Transuranic-WAC, and CH-TRAMPAC are controlled documents. The most current revisions are available for downloading from the CBFO web page at http:\\www.wipp.energy.gov/library/caolib.htm. This Internet link is provided for information purposes only and may change.*

(1) CCP-PO-003, CCP Contact-Handled Transuranic Waste Authorized Methods for Payload Control (CCP CH-TRAMPAC), Washington, D.C., Office of Regulatory Procedures, U.S. Nuclear Regulatory Commission

(2) DOE/WIPP-09-3427, Waste Data System (WDS) User's Manual, U.S. Department of Energy, Carlsbad Area Office (DOE/CAO), Carlsbad, New Mexico

(3) DOE/WIPP-02-3122, Transuranic Waste Acceptance Criteria for the Waste Isolation Pilot Plant, current revision, U.S. Department of Energy, Carlsbad Area Office (DOE/CAO)

(4) Form-1219, SWB Direct-Loaded Container Data Sheet

(5) Form-1362, Container Integrity Inspection

(6) Form-1363, SWB Direct-Loaded Container

(7) Form-1597, Reconciliation with Data Quality Objectives

(8) Form-1598, Characterization Information Summary Report

(9) Form-1775, SWB Direct Loading Form

(10) Form-2003, SWB Direct-Loaded Container in Soft-Sided Containments

(11) MP-DOCS-18.2, Records Management

(12) MP-Q&SI-5.4, Identification of Nonconforming Conditions

(13) MP-TRUW-8.1, Certification Plan for INL Transuranic Waste

(14) MP-TRUW-8.2, Quality Assurance Project Plan

(15) MP-TRUW-8.11, Data Reconciliation

(16) NM4890139088 WAP, WIPP Hazardous Waste Permit Analysis Plan

6.0 RECORDS

Records generated by this procedure are classified in accordance with the table below and dispositioned in accordance with MP-DOCS-18.2, Records Management.

Record Description	Classification
MP-TRUW-8.5, Case File	Nonpermanent WIPP/ ENV1-J-1 Destroy 75 years after submittal
WDS Characterization Container Data Report	Lifetime WIPP/ ENV1-J-1/ Turn over to CBFO at end of project
WDS Certification Container Data Report	Lifetime WIPP/ ENV1-J-1/ Turn over to CBFO at end of project
Waste Container Data Entry Form (WCDEF)	Lifetime WIPP/ ENV1-J-1/ Turn over to CBFO at end of project
OSM Container Certification Statement	Lifetime WIPP/ ENV1-J-1/ Turn over to CBFO at end of project
CCP NCR e-mail notification	Lifetime WIPP/ ENV1-J-1/ Turn over to CBFO at end of project
Form-1044, Record Transmittal	Same as record(s) being transmitted
Form-1936, Container Data Approval	Lifetime WIPP/ ENV1-J-1/ Turn over to CBFO at end of project

7.0 EXHIBITS

None

8.0 APPENDICES

Appendix A – Tables

Table 1. Volume and mass of packaging materials
Table 2. Data sources for the Waste Container Data Entry Form (WCDEF) in the WTS

Appendix B – Guidelines for Determination of Manual or EV&V QA Records

Appendix A – Tables

Table 1. Volume and mass of packaging materials.

	Volume (m^3)	Tare Mass (kg)
Polyethylene rigid liner		7.3
55-gallon drum	0.208	26.81
85-gallon drum	0.321	37.73
100-gallon drum	0.378	56.82
Standard waste box (SWB)	1.88	290.3
Ten-drum overpack (TDOP)	4.50	725.6

Table 2. Data sources for the Waste Container Data Entry Form (WCDEF) in the WTS.

Field Label	Source [a]
Shipper Site ID	BN
Waste Stream Profile	The WSPF number is obtained from Form-1195, Waste Stream Profile Form. When a Waste Stream Profile is approved, its current revision can be found on Orion under EDMS.
WIPP Container Type	The value entered into the WDS to designate the manner and condition in which the container will be certified and shipped. 1 55-gallon drum 2 Standard Waste Box (SWB) 3 Ten-Drum Overpack (TDOP) 14 SWB overpack, drum - good condition 15 SWB overpack, drum - bad condition 16 55-gallon To Be Overpacked (TBO), drum debris - good condition 17 55-gallon TBO, drum debris - bad condition 18 55-gallon TBO, drum solids - good condition 19 55-gallon TBO, drum solids - bad condition 23 100-gallon product drum 28 85-gallon TBO containers.
WAC Revision Number	DOE/WIPP-02-3122, Transuranic Waste Acceptance Criteria for the Waste Isolation Pilot Plant
Certification Site ID	WSPF or AK Summary Report
Certification Date	The date the WCO signs the WCDEF Certification Statement.
Waste Handling Code	CH = Contact Handled RH = Remote Handled
Waste Stream Baseline Inventory Report (BIR) ID	Waste Stream BIR ID number is obtained from the WSPF or the AK summary (N/A if not available)
Waste Stream Mixed Waste Inventory Report (MWIR) ID	Waste Stream MWIR ID number is obtained from the WSPF or the AK summary (N/A if not available)

Table 2. (Continued).

Field Label	Source [a]
Generator Site ID or Generator Site Item Description Code (IDC) or IDC Waste Matrix (parameter) Code or Waste Matrix Code	WSPF or AK Summary Report (N/A if not available)
TRUCON Code	Entering the TRUCON code is performed by the waste certification staff based on the waste material contents and the layers of packaging used for each container. The TRUCON code assignment is reviewed and approved by the WCO during container certification and can be found on the WSPF and AK summary.
Shipping Category [b]	CH-TRU Waste Content Codes, Summary of Approved Content Codes and Corresponding Shipping Categories for General Case. Associated with the specific TRUCON code for a given packaging configuration, filter hydrogen diffusivity, and container type.
TRU Alpha Activity TRU Alpha Activity Error TRU Alpha Activity Concentration TRU Alpha Activity Concentration Error Pu-239 Fissile Gram Equivalent Pu-239 Fissile Gram Equivalent Error Pu-239 Equivalent Activity Decay Heat Decay Heat Error	All of these values are calculated based on radionuclide activities and masses from the Radioassay BDR or appropriate WTS screens.
Layers of Packaging	VE BDR, RTR BDR, RTR/VE update or appropriate WTS screens
Fill Factor	VE BDR, RTR BDR, RTR/VE update or appropriate WTS screens
Liner Exists	VE BDR, RTR BDR, RTR/VE update or appropriate WTS screens
Liner Hole Diameter	VE BDR, RTR BDR, RTR/VE update or appropriate WTS screens

Table 2. (Continued).

Field Label	Source [a]
Process Knowledge Exists	WSPF or AK Summary Report
PCB Concentration	WSPF or AK Summary Report
Closure Date [b]	Real Time Radiography BDR or Visual Examination BDR, RTR/VE update, or appropriate WTS screens.
Vent Date [b]	Appropriate WTS screens.
Aspiration Method [b]	Obtained from CH-TRAMPAC based on vent date and closure date
1 Measured FGGR 2 Measured TGRR 3 Truncated GFFR Test Indicator 4 Truncated FGGR Test Period.	Gas Generation Testing BDR or appropriate WTS screens
Gross Weight Gross Weight Error	RTR BDR, RVU BDR, Radioassay BDR, or appropriate WTS screens
Alpha Surface Contamination Beta/Gamma Surface Contamination Neutron Dose Rate Beta/Gamma Dose Rate	RCT Survey Records, WTS Inspection Station Radiological Survey Report and Map
Quantity Installed [b] Filter Model [b] Filter Install Date [b]	Appropriate WTS screens.
Aqueous Material	AK Summary Report, RTR BDR, RVU BDR or appropriate WTS screens
Beryllium Present Beryllium Mass < or = 100 kg Beryllium < or = 1 % by Weight	AK Summary Report, RTR BDR, RVU BDR, or appropriate WTS screens

Table 2. (Continued).

Field Label	Source [a]
Machine Compacted	WSPF or AK Summary
½ in. Separation criteria met for compacted waste	WSPF or AK Summary Y=Yes for Supercompacted Waste N=No for all other waste
PCB Waste PCB Out-of-Service Date PCB Mass PCB Concentration (ppm)	AK Summary Report, RTR BDR, RVU BDR, or appropriate WTS screens
Radionuclide Activity Radionuclide Activity Error Radionuclide Mass Radionuclide Mass Error	Radioassay BDR, or appropriate WTS screens
Waste Material Parameters Waste Material Parameter Weight	RTR BDR, Visual Examination BDR, RVU BDR or appropriate WTS screens
Assay Method Assay Method Date	Radioassay BDR or appropriate WTS screens.
Characterization Method Characterization Method Date	RTR, VE, or appropriate WTS screens
Hazardous Codes	WSPF or AK summary
Comment Type WIPP Comment	This is completed by the WCO if necessary and used to provide additional certification information to the WDS.

a. The data sources listed in this table will be used for the majority of containers to be certified. However, in some cases, other approved sources (e.g., other BDRs, WTS screens, approved forms, etc.) may be used, when appropriate, to obtain the correct information.

b. CCP is responsible for these fields when sampling is conducted for transportation purposes. However, Shipping Category, Aspiration Method, Closure Date, Vent Date, and all filter information will always be CCP's responsibility.

Appendix B – Guidelines for Determination of Manual or EV&V QA Records

For any data validated at the ITR level before May 4, 2006, the manual Batch Data Report (BDR) is the QA record, except as noted below:

- Assay Expert Technical Review (ETR) performed on a container on or after May 4, 2006, will result in a WTS QA record regardless of the original status of the BDR, as the ETR data for that container is validated in WTS only.

For most data validated at the ITR level on or after May 4, 2006, WTS is the QA record, except as noted below:

NOTE: *For both manual and electronic RVU validation, WTS will indicate "Curr Approval" at "SPM" and an "Approval Status" of "AP" in WTS.*

- RTR/VE updates (RVU) not validated electronically in WTS with the BDR and which have an analysis date prior to September 2, 2009, were required to be validated manually; the manual BDR is the QA record.

- For manual assay batch results where a more recent valid weight event exists, e.g., RVU, verify gross weight, net weight, and TAAC in WTS.

- Any data generated by an off-site laboratory or contractor (such as SuperHENC or ALD BDRs) will be manually validated, and the manual BDR is the QA record.

Level I Data Validation

Advanced Mixed Waste Treatment Project

Approval:

(*Signature on file. See DCR-13605.*) 08/14/14

Date

REVISION LOG

Revision Number	Date Approved	Pages Affected	Description of Revision
0	07/17/02	All	Initial issue. DCR-2002-1305.
1	02/13/03	All	DCR-1762: Changed revision number from 0 to 1. This revision is a total rewrite and revision bars have been omitted.
2	3/28/03	All	DCR 2163: Change effective date from "When DOE Approved Retrieval Operations" to March 28, 2003.
3	05/12/03	Various	DCR 2134: Incorporation of CBFO comments.
4	07/09/03	Various	DCR 2307: Resolve CBFO PE comments, correct form numbers, minor editorial
5	7/23/03	Page 52 Drum and Liner Configuration Table. Section 4.5.2.11	Add filter numbers NF007 and NF007S to BNFL SS and BNFL SP respectively, in the "Drum and Liner Configuration" Table for interim filters as the listed filters are not currently available. Delete "and the appropriate flag is set for isotopes less than MDA." This flag is set automatically in the WTS in the Off Site Shipping Module. It cannot be verified at the ITR Level.
6	8/28/03	Page 14	DCR 2421: Added NOTE to address weight inconsistencies on waste material parameter weights.
7	9/25/03	Various	DCR 2453: Update manual batch data reports contents, changed internal standard criteria on Forms-1418 and deleted an obsolete requirement from Form-1416. Changed the test pattern resolution check to image quality indicator check on Forms 1412 and 1414. Added Form-1494 to perform a manual replicate comparison, Reference WIPP Audit A-03-05, CBFO CAR 03-072.

Revision Number	Date Approved	Pages Affected	Description of Revision
8	03/29/04	Various	DCR-2562: Update rework process and change replicate comparison to RTR/VE comparison in VE. Added a section for a supplemental RTR Batch Data Report and the new Headspace Gas Sampling system. Changed internal standard criteria on checklist item 12 on Form-1418, deleted an obsolete requirement from Form-1416, deleted Form-1438, editorial correction of Form-1414 and 1412, and added the system number reference and comments to Form-1446. Added a new section and Form-1517, 1518, 1519, for the new HGAS Headspace Gas Sampling System. Added Step 4.6.2 for Assay supplemental batch data reports for adjusted TRU alpha activity concentration.
9	04/22/04	Various	DCR-2920: Implement Corrective Action Plan (CAP) for CAR 4634. This revision has added discussion and requirements regarding generation of Nonconformance Reports for containers that do not meet WIPP WAP or WIPP WAC requirements and allow for completion of Batch Data Report validation in recognition that there may be open NCRs against containers within the Batch that require re-characterization or treatment.
10	5/17/04	Various	DCR-2991. Editorial changes and clarification of the NCR process.
11	01/15/05	Various	DCR-3157. Streamline the validation process and update to be in compliance with WWIS data entry requirements for Radioassay. Incorporate WIPP Comments.
12	04/21/05	Various	DCR-4200. Revise throughout for clarification and efficiency. Minor editorial changes made throughout. Incorporate CBFO Comments from Revision A.
13	6/14/05	56/57	Add note regarding FGE threshold limits for drums and boxes. Add **IF THEN** statement regarding FGE amount for a given waste container. Replace logos company names, and titles to reflect organization changes.

Revision Number	Date Approved	Pages Affected	Description of Revision
14	02/10/2006	All	DCR-4432. Revised to conform to the CH-WAC, to improve efficiency of processing BDRs, and to reduce NCRs. Sequence of sections changed to comply with MP-DOCS-18.3, Rev. 2.
15	4/27/06	Various	DCR-4942. Add new steps in 3.4.1.10 to implement SCR 350. Item 1 on DCR-4942 implements a corrective action identified in CAR 16631. Additional process improvements.
16	05/16/2006	Various	DCR-5005. Revised to reflect changes in electronic data validation.
17	9/28/06	Various	DCR-5042. Removed all references to Form-1046. Modified Note 5 in Section 3.3. Revised Notes following Section 3.2.1.3.4.1 for implementation of corrective action identified from CBFO CAR 06-036, TrackWise™ CAR 23463. Made various editorial corrections.
18	1/05/07	Various	DCR-5476. Complete Rewrite to implement the Waste Isolation Pilot Plant Hazardous Waste Facility Permit requirements resulting from the Section 311/Remote-Handled (RH) Permit Modification Request (PMR). Deleted Form-1234, -1413, -1414, -1419, -1420, -1422, -1423, -1424, -1425, -1426, -1427, -1514, -1518, and -1519 (see DCR-5496).
19	05/07/07	ALL	DCR-5707. Add new appendix to the procedure to support BDR building activities. Delete references to Form-1312. Modify Forms-1412, 1415, 1421, 1517, Cancel Form-1418. Editorial and formatting changes consistent with MP-DOCS-18.3, MP-DOCS-18.4.
20	05/22/07	Various	DCR-5957. Correcting the references to INST-OI-73 from “and” to “and/or”. Revise Form-1412 (DCR-5958) and DCR-1421 (DCR-5959) for similar change. Remove batch number from Form-1412, and switch order of Q’s 3 and 4 on Form-1421.
21	05/30/07	ALL	DCR-6004. Revert content of procedure to Revision 19, as well as reverting Form-1412 to Rev. 11, Form-1421 to Rev 10.
22	06/07/07	Various	DCR-6017. Revert content of procedure to Revision 20, as well as reverting Form-1412 to Rev. 13, Form-1421 to Rev 12.

Revision Number	Date Approved	Pages Affected	Description of Revision
23	08/14/07	Pg 55, and Form-1421	DCR-6225. Add "and/or Characterization Round Sheet (Form-1602)" after "(Form-1585)" to Step 3.6.1.3.2. DCR-6224. Form-1421. Add verbiage from DCR-6225 (above) to Form-1421, Question 2.
24	01/07/08	Various	DCR-6689. Added steps required corrective action CAR # 34753 and to implement program changes.
25	01/17/08	Section 3.4.	DCR-6719. Minor change to correct cross references.
26	03/25/08	Various	DCR-6800. Made changes to support transportation transition to CCP. Implementation of container-in-container sampling and box RTR.
27	08/06/08	Various	DCR-7378. Delete "and in accordance with MP-TRUW-8.39, RTR Operator Proficiency Program" and Delete the reference to MP-TRUW-8.39
28	03/30/09	Various	DCR-7705. Clarification on coring process to close CAR # 42255. Editorial and formatting changes consistent with MP-DOCS-18.3, MP-DOCS-18.4. Added DOCS-BLUESHEET-01.
29	05/27/10	Various	DCR-9010. Changes made to clarify DGL independent technical review; clarify that RTR cannot confirm the waste stream, revise definition of "waste stream"; move Section 3.1, Description of Batch Data Reports, as Appendix C; incorporate WIPP Permit modification changes; and incorporate SCR 4077 changes.
30	12/17/10	Various	DCR-9635. Incorporate the WIPP Permit Renewal.
31	07/28/11	Various	DCR-10152. Various revisions to address CAR 61367 and to address sludge processing in AMWTF.
32	04/25/12	Various	DCR-10658. Corrected wording in Notes in Sections 3.1 and 3.4. Incorporated ITG-BLUESHEET-078.
33	11/10/12	Step 3.2.4.10	DCR-11783. Corrected test to make consistent with QPjP and WAP requirements for Quality Assurance objectives.

Revision Number	Date Approved	Pages Affected	Description of Revision
34	06/17/13	Various	DCR-12231. Changes to implement PMR NM4890139088-TSDF, Class 2 Permit Modifications dated March 13, 2013, which revises the Waste Analysis Plan (WAP) waste characterization methods that remove requirements for headspace gas and solid sampling and analysis.
35	08/05/13	Various	DCR-12589. Added new Step 3.3.1.3.3 and associated note to provide information about indeterminate assay results.
36	04/29/14	Pg 27	DCR-12827. Added step for ETR to enter comment to justify changes to assay results.
37	05/15/14	Various	DCR-13447. Moved various steps to INST-OI-12.
38	06/30/14	Various	DCR-13552. Changes for correction, clarification and to remove material not needed for new process.
39	08/14/14	Various	DCR-13605. Add verbiage for new requirement at Step 3.1.3.10.2: "For all debris waste identified as potential INL waste by specific IDC, or under designator UN-000, BN-180, or SD-179, identify any waste containers….."

TABLE OF CONTENTS

1.0 PURPOSE/SCOPE 1

2.0 ROLES AND RESPONSIBILITIES 2

3.0 PROCEDURE 3

3.1 RTR Batch Data Report – ITR Review 3

3.2 Visual Examination Batch Data Report ITR Validation 11

3.3 Radioassay Batch Data Report 16

4.0 DEFINITIONS 31

5.0 REFERENCES 32

6.0 RECORDS 33

7.0 EXHIBITS 33

8.0 APPENDICES 33

TABLE

Table 1. Characterization Methods. 1

AMWTP MANAGEMENT PROCEDURE		
MP-TRUW-8.8, Rev. 39	Issued: 08/21/14	Effective: 08/21/14 @ 0800 hr

Level I Data Validation

1.0 PURPOSE/SCOPE

This procedure implements requirements and identifies the responsibilities specified in MP-TRUW-8.1, Certification Plan for INL Transuranic Waste, and MP-TRUW-8.2, Quality Assurance Project Plan, for the data generation level (DGL) review and *validation* (see def.). Validation includes reviewing relevant documentation to evaluate technical adequacy, the suitability for intended use, and the adequacy of the quality assurance (QA) record, as well as documentation of the data review.

Data generation level validation at the Advanced Mixed Waste Treatment Project (AMWTP) consists of a review conducted by an independent technical reviewer (ITR) who is a trained and qualified individual who was not involved in the generation or recording of the batch under review. Data generation level (ITR) is performed on 100% of testing (*real-time radiography* [RTR; see def.], *visual examination* [VE; see def.], and *radioassay* [RA; see def.]) batches. The validation steps in this procedure require reviewers, as applicable, to complete checklists in the waste tracking system (WTS) or on controlled forms for batches that have received the appropriate signature release prior to submittal of the electronic or hardcopy batch data report (BDR) to the Site Project Office. All necessary characterization and review, validation, and verification must be completed before a container can be shipped. Containers within BDRs that do not meet the Waste Isolation Pilot Plant (WIPP) waste analysis plan (WAP) or waste acceptance criteria (WAC) requirements, or which require further characterization or removal of prohibited items, will be documented on nonconformance reports (NCRs).

Nonconformance reports shall remain open pending completion of the characterization activity, and/or subsequent validation. Nonconformance reports shall be generated on a container basis unless the condition affects the entire BDR.

Table 1 identifies the characterization methods subject to DGL validation, the type of BDR, the upper tier document that defines the DGL validation requirements, the required reviewers, and the facility performing the review.

Table 1. Characterization Methods.

Characterization Method	Report Type	Upper Tier Document	Reviews Required	Responsible Facility
Real-Time Radiography	Testing Batch	MP-TRUW-8.1 MP-TRUW-8.2	ITR	AMWTP
Visual Examination	Testing Batch	MP-TRUW-8.1 MP-TRUW-8.2	ITR	AMWTP
Radioassay	Testing Batch	MP-TRUW-8.1	ITR ETR	AMWTP

2.0 ROLES AND RESPONSIBILITIES

Performer	Responsibilities
ITR	• Ensures by review of the raw data that data generation and reduction are technically correct; calculations are verified correct; deviations are documented; and QA/quality check (QC) results are complete, documented correctly, and compared against appropriate criteria • Validates and verifies the work documented by the originator • Ensures that NCRs generated for containers are included or referenced in the BDR • Initiates the NCR using TrackWise, in accordance with MP-Q&SI-5.4, Identification of Nonconforming Conditions, if the operator did not generate an NCR when required.
ITR Lead	• Reviews Type-1 NCRs, as needed • Notifies site project manager designee (SPMD) and RTR subject matter expert (SME) of Type-1 NCR generation.
RTR SME	• Evaluate issues associated with potential operator performance problems.
SPMD	• Review Type-1 NCRs initiated for operator performance problems.
Expert Technical Reviewer (ETR)	• The nondestructive assay (NDA) ETR provides measurement oversight, performs routine instrument qualification, calibration, and validation, and reviews and approves measurement control data.

3.0 PROCEDURE

NOTE 1: *Whenever a form is required, if an electronic equivalent of the form is available on WTS, the use of the electronic form is acceptable.*

NOTE 2: *The review will be performed by an individual other than the data generator who is qualified to have performed the initial work and who was not involved in the generation or recording of the data under review.*

NOTE 3: *Every effort should be made to have the original reviewers complete a batch, but another qualified reviewer can complete a batch, if necessary. This situation should be documented in batch comments.*

NOTE 4: *Data changes will only be made by the individual who collected the data or an individual authorized to change the data.*

NOTE 5: *100% of the BDRs will receive an ITR review that will be conducted as soon as practicably possible after data collection in order to determine and correct negative quality trends.*

3.1 RTR Batch Data Report – ITR Review

NOTE: *Real-time radiography/VE update events on any container in the RTR BDR require a subsequent validation of the RTR/VE update event. Checklist items that do not apply will be identified as N/A.*

3.1.1 Access an operator-approved WTS RTR BDR.

NOTE: *Nonconformance reports are required for containers that fail to meet* data quality objectives *(DQOs; see def.),* quality assurance objectives *(QAOs; see def.), or which contain prohibited items.*

3.1.2 Ensure that NCRs that were generated during data generation are included or referenced in the BDR, as appropriate, and that WTS is flagged, as appropriate.

3.1.3 Complete the data review and document all concerns and comments in WTS or manually using Form-1412, Real-Time Radiography Independent Technical Reviewer Checklist, and Form-1491, Batch Data Report Supplemental Comment Form, by performing the following:

3.1.3.1 Record the testing batch number and RTR system ID on Form-1412, if necessary.

3.1.3.2 Verify that the BDR and QA documentation are complete in accordance with this procedure by verifying all of the following (manual forms identified in parentheses):

A. RTR batch report coversheet

B. Table of contents (manual review only)

C. RTR analysis reports

D. Replicate scan

E. Replicate/OIO comparison

F. Independent observation

G. ITR Checklist (Form-1412) (manual review only)

H. Batch Data Report Supplemental Comment Form (Form-1491) (manual review only)

I. Associated NCRs (referenced in WTS)

J. Audio/video (A/V) recording references.

3.1.3.3 Verify no more than 20 containers are in the batch.

3.1.3.4 Verify a valid imaging quality indicator (IQI) is included in the batch.

NOTE: *Oversight functions include periodic A/V reviews of accepted waste containers and are performed by qualified radiography personnel that were not involved in the original scans of the waste containers. The results of this independent verification are available to the RTR operators who performed the original scans through the RTR SME.*

3.1.3.5 Verify each container references an A/V recording.

3.1.3.6 Verify a completed radiography data analysis for each of accepted waste containers is in the batch.

3.1.3.7 Verify each RTR operator was qualified at the time of the radiography event.

3.1.3.8 Verify the data were generated in a technically correct manner using the correct revision of INST-OI-12, Real-Time Radiography Examinations (Certification Scans).

3.1.3.9 Verify the correct procedure and revisions were documented on all analysis reports.

3.1.3.9.1 If the procedure number and revision are incorrectly displayed in the WTS, verify that the operator has entered the correct procedure number and revision in the result comment section of WTS.

3.1.3.10 For each container in the batch, verify the following:

A. The E-signature history was reviewed.

B. The RTR operator has confirmed that the physical form matched the *waste stream* (see def.) description and waste matrix code (WMC).

C. The packaging weight plus the net weight equal the gross weight of the container.

D. All items entered into the waste material items are assigned to the correct waste material parameters.

(HWMA/RCRA Permit)

E. The description of rigid liners and layers of confinement are properly documented, as applicable.

3.1.3.10.1 If rework has been identified that changes the liner puncture status, generate an NCR and ensure WTS is flagged as appropriate.

NOTE 1: *Lead is not a prohibited item but can prevent an operator from detecting the presence or absence of a prohibited item. When examining containers whose contents prevent full examination of a waste item (e.g., check weights or calorimeter cans) or of the remaining contents (e.g., an aggregate of leaded rubber gloves or dense sludge), acceptable knowledge (AK) information that may have determined a VE would not provide additional relevant information for that container may be referred to.*

NOTE 2: *Wet cell batteries are prohibited items if observable liquid is contained within the battery.*

NOTE 3: *Mercury is not prohibited unless the criteria for prohibited observable liquid are exceeded.*

NOTE 4: *Polychlorinated biphenyls (PCBs) are considered prohibited if any observable liquid is in the affected container. Potential PCB items will need to be included in the waste inventory.*

F. The presence or absence of prohibited items has been properly documented.

3.1.3.10.2 If debris waste is identified as potential INL waste by specific INL IDC, UN-00B, BN-770, BN-523, BN-524, or under designators UN-000 or BN-180, identify any waste containers that have an inner container with dried chemicals (e.g., powder/pellets).

3.1.3.10.2.1 Generate a type 3 NCR if the condition in Step 3.1.3.10.2 is identified.

3.1.3.10.3 If prohibited items have been identified, verify that an NCR has been generated and properly documented in WTS.

3.1.3.10.4 If an NCR was not generated, generate an NCR and ensure WTS is flagged, as appropriate.

3.1.3.10.5 Notify RTR SME, ITR Lead, and SPMD via TrackWise NCR notification system of operator performance problem for evaluation.

3.1.3.10.5.1 If the evaluation indicates a programmatic issue, then initiate a Type-1 NCR in accordance with MP-Q&SI-5.4, and notify the SPMD, ITR Lead, and RTR SME via TrackWise notification system.

G. The containers examined during cold weather months are in compliance with the preheat requirements.

H. All proper units and significant figures used for reporting volumes/weights are correct.

3.1.3.11 Verify that a replicate scan was valid and performed on at least one container per day, or once per testing batch, whichever is less frequent, by a qualified radiography operator who was not involved in the original scan of the waste container.

3.1.3.11.1 If the replicate scan is not from this batch, record the appropriate batch number in the comment section in WTS or on Form-1412 and go to Step 3.1.3.12.

3.1.3.11.2 Verify that the RTR Replicate Comparison Report has been completed.

3.1.3.11.3 Record the container identification number and date of the replicate comparison in the comments section of the checklist and record any issues or concerns in the appropriate batch comment section in WTS.

3.1.3.12 Verify that an independent observation was valid and performed on at least one container per day or once per testing batch, whichever is less frequent, by a qualified radiography operator who was not involved in the original scan of the waste container.

3.1.3.12.1 Verify that the RTR independent observation comparison report has been completed.

3.1.3.12.2 Record the container identification number and date of the independent observation in the comments section of the checklist and record any issues or concerns in the appropriate batch comment section in WTS.

3.1.3.13 Verify the RTR QAOs were met.

- Precision: Precision is maintained by reconciling any discrepancies between two radiography operators with regard to identification of WMC, liquid in excess of WIPP WAC limits, and compressed gases through independent replicate scans and independent observations. Additionally, the precision of radiography is verified prior to use by tuning precisely enough to demonstrate compliance with QAOs through viewing an image test pattern.

- Accuracy: Accuracy is obtained by using a target to tune the image for maximum sharpness and by requiring operators to successfully identify 100% of the items required to meet the DQOs in a training container during their initial qualification and subsequent re-qualification.

- Completeness: A video and audio media recording of the radiography examination and a validated radiography data form have been obtained for 100% of the waste containers subjected to radiography. All video and audio media recordings and radiography data forms have been subjected to validation as indicated.

- Comparability: The comparability of radiography data from different operators is enhanced by using standardized radiography procedures and operator qualifications.

NOTE: *Nonconformance reports may be open against containers within the batch because the container requires re-characterization or treatment. The NCRs will remain open until the recharacterization or treatment process has been completed and validated, or the action is no longer required.*

3.1.3.14 Verify that NCRs have been generated for containers that contain prohibited items or that failed to meet DQOs or QAOs, and properly documented in WTS.

3.1.3.14.1 If an NCR was not generated, generate an NCR and ensure WTS is flagged, as appropriate.

3.1.3.14.2 Notify RTR SME, ITR Lead, and SPMD via TrackWise NCR notification system of operator performance problem for evaluation.

3.1.3.14.2.1 If the evaluation indicates a programmatic issue, then initiate a Type-1 NCR in accordance with MP-Q&SI-5.4, and notify the SPMD, ITR Lead, and RTR SME via TrackWise notification system.

3.1.3.15 If rework items have been identified during validation, perform the following:

3.1.3.15.1 Ensure that rework requirements have been clearly identified in WTS or on Form-1491 and/or Form-1412, as applicable.

3.1.3.15.2 Generate an NCR, when applicable, in accordance with MP-Q&SI-5.4, and ensure WTS is flagged, as appropriate.

3.1.3.15.3 Notify RTR SME, ITR Lead, and SPMD via TrackWise NCR notification system of operator performance problem for evaluation.

3.1.3.15.3.1 If the evaluation indicates a programmatic issue, then initiate a Type-1 NCR in accordance with MP-Q&SI-5.4, and notify the SPMD, ITR Lead, and RTR SME via TrackWise notification system.

3.1.3.15.4 Return the batch to appropriate level to complete the rework.

3.1.3.16 If a batch has been repromoted from rework, verify that all comments have been adequately addressed and noted in WTS or on Form-1491 and/or Form-1412, as applicable.

3.1.3.17 If the rework was addressed appropriately, add a comment that indicates that the rework was performed satisfactorily.

3.1.3.18 Add a comment in the checklist section in WTS, or on Form-1412, when validation review determines the question criteria has not been met.

3.1.3.19 If rework issues still exist, repeat Steps 3.1.3.15 through 3.1.3.15.4.

3.1.3.20 Ensure for manual BDRs that the completed Form-1412 and Form-1491 are attached to the BDR.

3.1.3.21 Ensure that the RTR/VE update event is complete, as applicable.

3.1.3.22 Ensure that Type-1 NCRs were initiated for identified programmatic issues prior to promoting to Level II validation.

3.1.3.23 Approve the data using the electronic signature process in WTS or print, sign, and date Form-1412, using reproducible ink.

3.2 Visual Examination Batch Data Report ITR Validation

NOTE 1: *Real-time radiography/VE update events on any container in the VE BDR require a subsequent validation of the RTR/VE update event. Checklist items that do not apply will be identified as N/A.*

NOTE 2: *The ITR for VE is performed by a trained and qualified individual who was not involved in the generation or recording of the data under review.*

3.2.1 Access an operator-approved VE Batch Report from the manual BDR folder or WTS Data Review screen on the main menu, as applicable.

3.2.2 Select the appropriate batch type:

- VNC (Newly-Generated Waste VE Closure)
- VEC (VE of Legacy Waste Container)
- VEB (VE Boxline and Repack).

3.2.3 Ensure NCRs that were generated during data generation are referenced and flagged in WTS, as applicable.

3.2.4 Complete the data review in WTS or manually using Form-1415, Visual Examination Independent Technical Reviewer Checklist, and document all concerns and comments in the WTS, or manually using Form-1415 or Form-1491.

3.2.4.1 Record the testing batch number and method/location on Form-1415, if necessary.

3.2.4.2 Verify that the BDR and all QA documentation are complete in accordance with this procedure by verifying all of the following (manual forms identified in parentheses):

A. VE batch coversheet

B. Table of contents (manual review only)

C. VE analysis reports

D. Analytical Balance Calibration Check Sheet (Form-1215), if applicable (manual review only)

E. Visual Examination Independent Technical Reviewer Checklist (Form-1415) (manual review only)

F. Batch Data Report Supplemental Comment Form (Form-1491) (manual review only)

G. Associated NCRs (referenced in WTS)

H. A/V recording references, if applicable.

3.2.4.3 Verify that no more than 20 containers are in the batch.

3.2.4.4 Verify each VE operator was qualified at the time of the VE event.

3.2.4.5 Verify a VE data form was completed for each container in the batch.

3.2.4.6 Verify the data were generated in a technically correct manner using the correct revision of INST-OI-34, Non-Facility Visual Examination Operations; INST-FOI-17, Facility Visual Examination Operations (as applicable).

3.2.4.7 Verify the correct revision of the procedure was documented on each analysis report.

3.2.4.7.1 If the procedure number and revision are incorrectly displayed in the WTS, verify that the operator has entered the correct procedure number and revision in the Visual Exam Comment section of WTS.

3.2.4.8 For each drum in the batch, verify the following:

A. The E-signature history was reviewed.

- For each VE event, two qualified operators agreed on the characterization of the waste as documented by manual or electronic signature.

B. Guidance from visual exam expert (VEE) is documented on the A/V medium and in WTS, as applicable.

C. Every drum has a valid A/V recording, as applicable.

- The correct A/V medium identification (ID) was recorded on the WTS record.

D. The physical form matched the waste stream description, WMC, and item description code (IDC).

E. The waste material parameters were documented correctly for the following:

- The inventory of waste containers on the material items screen in WTS, which includes the description, units, weight or volume, and the correct assignment of the waste parameters.
- The assignment of the bulk matrix including the description.
- When a liner is present, it is included in the waste material parameter summary section as plastic packaging materials.

F. The presence or absence of prohibited items has been properly identified.

3.2.4.9 Verify the descriptions of rigid liners and layers of confinement have been properly documented.

A. Review the following information for accuracy and completeness:

- Closure method(s)
- Liner puncture status
- Layers of confinement
- Closure date
- Packaging configuration
- Type and number of filters, as applicable
- Liner hole presence and diameter, as applicable.

B. Filters have been installed or removed from drum as recorded in WTS, as applicable.

C. Hand calculations and unit conversions are recorded correctly in WTS.

- The packaging weight plus the net weight equal the gross weight of the drum in the estimated waste material parameters, and for the unit conversions that are entered by volume or weight, as applicable.

D. All units and significant figures used for reporting volumes/weights are correct.

3.2.4.9.1 Verify data for transcription errors, as appropriate.

3.2.4.9.1.1 If manual forms are used for data collection, verify no transcription errors are entered into WTS.

3.2.4.10 Verify the following VE QAOs:

- Precision: Precision requirement is maintained by reconciling any discrepancies between the operator and the ITR with regard to identification of WMC, liquid in excess of WIPP WAC limits, and compressed gases.

- Accuracy: Accuracy is maintained by requiring operators to pass a comprehensive examination and demonstrate satisfactory performance in the presence of the VEE during their initial qualification. VE operators shall be re-qualified every 2 years.

- Completeness: A validated VE data form has been obtained for 100% of the waste containers subject to VE.

- Comparability: The comparability of VE data from different operators is enhanced by using standardized VE procedures and operator qualifications.

3.2.4.11 Verify each data form is signed by qualified VE operators, as applicable, per the appropriate procedure being used.

3.2.4.12 Verify that the A/V check was satisfactory, as applicable.

3.2.4.13 Verify the scale or balance check weight event was satisfactory, as applicable.

3.2.4.14 Verify the QC weight checks are within the tolerance of the scale or balance, as applicable.

NOTE: *Nonconformance reports may be open against containers within the batch because the container requires recharacterization or treatment. The NCRs will remain open until the recharacterization or treatment process has been completed and validated, or the action is no longer required.*

3.2.4.15 If containers (a) contain prohibited items, or (b) fail to meet DQOs or QAOs, or (c) have a physical form, WMC, or IDC that does not match the waste stream description, then verify that NCRs have been generated for such containers and verify that the NCRs are properly documented in WTS.

3.2.4.15.1 If an NCR was not generated, generate an NCR and ensure WTS is flagged, as appropriate.

3.2.4.16 If rework items have been identified during validation, perform the following:

3.2.4.16.1 Ensure that rework requirements have been clearly identified in WTS or on Form-1491 and/or Form-1415, as applicable.

3.2.4.16.2 Generate an NCR, when applicable, in accordance with MP-Q&SI-5.4, and ensure WTS is flagged as appropriate.

3.2.4.16.3 Return the batch to appropriate level to complete the rework.

3.2.4.17 If a batch has been repromoted from rework, verify that all comments have been adequately addressed and noted in WTS or on Form-1491 and/or Form-1415, as applicable.

3.2.4.18 If the rework was addressed appropriately, add a comment that indicates that the rework was performed satisfactorily.

3.2.4.19 Add a comment in the checklist section in WTS, or on Form-1415, when validation review determines the question criteria have not been met.

3.2.4.20 If rework issues still exist, repeat Steps 3.2.4.16 through 3.2.4.16.3.

3.2.4.21 Ensure that the completed Form-1415 and Form-1491 are attached to the BDR, if applicable.

3.2.4.22 Ensure that the RTR/VE update event is complete, as applicable.

3.2.4.23 Approve the data using the electronic signature process in WTS or print, sign, and date Form-1415, using reproducible ink.

3.3 Radioassay Batch Data Report

3.3.1 ITR Validation

3.3.1.1 Create an RA batch from the WTS data review menu, as follows:

3.3.1.1.1 Select WTS screen.

3.3.1.1.2 Enter assay batching screen; build assay tab.

3.3.1.1.3 Enter desired instrument number and use query function to pull up list of available drums for an assay batch.

NOTE 1: *A daily background check (DBC) is performed once per operational day. All drums are within 24 hours of an opening DBC.*

NOTE 2: *A daily performance check (DPC) is performed at least once per operational day. All drums are within 24 hours of an opening and closing DPC.*

3.3.1.1.4 Choose DPC assays to bracket drums to be used in batch.

3.3.1.1.5 Choose drums to be batched and move into batch screen.

NOTE 1: *The selected opening and closing DPC, along with the selected drum assays, are now locked into an assay batch and can be accessed in WTS for the validation process.*

NOTE 2: *WTS will generate an assay batch number (e.g., ASY06-XXXXX).*

3.3.1.1.6 Save batch information.

NOTE: *Completion of the review is documented electronically in WTS or by signature release.*

3.3.1.2 Perform a review using the WTS or manually with Form-1416, Radioassay Independent Technical Reviewer Checklist, of 100% of the data generated for technical accuracy and completeness against the (WAC) method requirements by performing the following steps:

3.3.1.2.1 Enter testing batch number and equipment ID number on Form-1416, if applicable.

3.3.1.2.2 Verify DBCs were performed and recorded at least once per operational day.

3.3.1.2.2.1 If DBC was not performed per INST-OI-14, Drum Assay Operations, or INST-FOI-01, In Plant Drum Assay Operations, perform the following steps:

3.3.1.2.2.1.1 Generate an NCR in accordance with MP-Q&SI-5.4, stating the deficiency.

3.3.1.2.2.1.2 Flag in WTS, as applicable.

3.3.1.2.2.1.3 Suspend the data pending the completion of the NCR corrective action plan.

3.3.1.2.2.1.4 If a deviation flag(s) was indicated, review the action taken to mitigate the deviation(s), as appropriate, and verify an acceptable background check was achieved per INST-OI-14 or INST-FOI-01.

3.3.1.2.2.1.5 If no additional DBC was acceptable, perform the following steps:

3.3.1.2.2.1.5.1 Generate an NCR in accordance with MP-Q&SI-5.4, stating the deficiency.

3.3.1.2.2.1.5.2 Flag in WTS, as applicable.

3.3.1.2.2.1.5.3 Suspend the data pending the completion of the NCR corrective action plan.

3.3.1.2.2.1.5.4 Record any comments in the comment section in WTS, on Form-1416, or on Form-1491.

NOTE: *The DPC is carried out using a 55-gallon drum containing a combustibles matrix and plutonium standards. This drum is an interfering matrix and will therefore also be used together with a suite of additional interfering matrices to comply with interfering matrix requirements.*

3.3.1.2.3 Verify DPCs were performed and recorded at least once per operational day and before and after each cycle of production drums.

3.3.1.2.3.1 If DPCs were not performed per INST-OI-14 or INST-FOI-01, perform the following steps:

3.3.1.2.3.1.1 Generate an NCR in accordance with MP-Q&SI-5.4, stating the deficiency.

3.3.1.2.3.1.2 Flag in WTS, as applicable.

3.3.1.2.3.1.3 Suspend the data pending the completion of the NCR corrective action plan.

3.3.1.2.3.1.4 If a deviation flag(s) was indicated, review the action taken to mitigate the deviation(s), as appropriate, and verify an acceptable DPC was achieved per INST-OI-14 or INST-FOI-01.

3.3.1.2.3.1.5 If no additional DPC was acceptable, perform the following steps:

3.3.1.2.3.1.5.1 Generate an NCR in accordance with MP-Q&SI-5.4, stating the deficiency.

3.3.1.2.3.1.5.2 Flag in WTS, as applicable.

3.3.1.2.3.1.5.3 Suspend the data pending the completion of the NCR corrective action plan.

3.3.1.2.3.2 If the DPC is acceptable, select ACCEPT for the review outcome in WTS.

3.3.1.2.3.3 Record any comments in the comment section in WTS or on Form-1416.

NOTE: *The control charts are automatically plotted by Canberra's Genie-2000 Software. The technical information concerning measurement control (MC) parameters is documented in RPT-TRUW-03, Drum Assay Technical Review Report.*

3.3.1.2.4 Review the control chart data in NDA 2000 for each MC parameter for trends and bias.

3.3.1.2.4.1 Verify that the control chart data in NDA 2000 for each MC parameter have been reviewed weekly for trends and bias.

3.3.1.2.4.2 If a trend or bias is noted, notify an ETR for verification and dispositioning.

3.3.1.2.4.3 If a nonconformance condition exists, generate an NCR in accordance with MP-Q&SI-5.4, stating the deficiency and flag in WTS, as applicable.

3.3.1.2.5 Verify that all drums in the batch were assayed using the same NDA system.

3.3.1.2.6 Verify that each assay result is signed off and dated by a qualified operator.

NOTE 1: *Decay heat, ^{239}Pu fissile gram equivalent (FGE), and ^{239}Pu equivalent activity (PE-Ci) limits vary according to configuration and container condition; therefore, compliance determination is performed in the WIPP TRAMPAC Evaluation Software (WTES). The ^{239}Pu FGE limit varies according to the beryllium content established by AK in accordance with MP-TRUW-8.13, Collection, Review, and Management of Acceptable Knowledge Documentation.*

NOTE 2: *The ^{239}Pu FGE data reported by the drum assay systems is used by criticality safety to demonstrate compliance with the criticality working requirements as documented in EDF-0034, Criticality Safety Analysis for TRU Waste Storage, RPT-NFCS-07, Criticality Safety Evaluation for the AMWTF, and RPT NFCS-08, Criticality Safety Evaluation for AMWTP Retrieval Operations.*

NOTE 3: *A list of the IDCs that may contain >1% beryllium by weight of the waste can be provided by the Site Project Manager (SPM)/Acceptable Knowledge Expert.*

3.3.1.3 Confirm that the following radiological attributes have been identified in the proper units for all containers in the batch:

- Decay heat and associated error identified in watts
- ^{239}Pu FGE and associated error identified in grams and the sum of ^{239}Pu FGE plus two times its associated total measurement uncertainty (TMU) (i.e., FGE limit) is identified in grams
- Transuranic (TRU) alpha activity concentration and associated error identified in Ci/g
- Total ^{239}Pu equivalent activity and uncertainty identified in curies.

NOTE: *The TRU alpha activity concentration (TAAC) is calculated by WTS using all the TRU alpha activity from the assay result and the net weight that is stored by WTS. The net weight may change as a result of recharacterization or treatment after the assay ITR is complete. This will impact the TAAC calculated by WTS. Any change associated with the net weight and the TAAC in the manual BDR is covered by Section 3.3.2 of this procedure. Revalidation of electronic BDRs is not required.*

3.3.1.3.1 Verify the reported activity for at least one TRU isotope is greater than its associated minimum detectable activity (MDA).

3.3.1.3.2 If the ^{239}Pu FGE limit is >200 FGE for IDCs that contain ≤ 1% beryllium by weight of the waste, or if the ^{239}Pu FGE limit is >100 FGE for IDCs that contain >1% beryllium by weight of the waste up to 100 kg, generate an NCR in accordance with MP-Q&SI-5.4, and flag it in WTS, as applicable.

NOTE 1: *If the reported activity for every TRU isotope is less than or equal to its associated MDA, then the lower limit of detection (LLD) (for TRU isotopes) field of the RA data sheet screen in WTS will auto-populate "Yes."*

NOTE 2: *An indeterminate assay result occurs when the reported activity for every TRU isotope is less than or equal to its associated MDA, but the resulting minimum detectable concentration (MDC) is >100 nCi/g.*

3.3.1.3.3 With the exception of containers with a BL-010 or BL-020 IDC, if the reported activity for every TRU isotope is less than or equal to its associated MDA and the resulting MDC is >100 nCi/g, select "IND" from the LLD field of the RA data sheet screen in WTS.

NOTE: *The auto independent technical review (AITR) software is incorporated within NDA-2000 software and may be used to aid the ITR/ETR in the assessment of the assay results. The Data Review Criteria and the technical information concerning data review are documented in RPT-TRUW-03.*

3.3.1.4 Review assay results and disposition any item(s) identified as not meeting the data review criteria in WTS.

3.3.1.4.1 If review of the data indicates that the item(s) not meeting the data review criteria may have caused a bias in the reported results, ensure an NDA expert review is performed.

NOTE: *The re-analysis described in the next step will result in the generation of a new NDA2000 report file that will be automatically saved in the C:\GENIE2K\REPFILES\ directory.*

3.3.1.4.2 Expert Reviewer: Review the raw data associated with the item not meeting the data review criteria, involving a reanalysis using the NDA2000 software.

3.3.1.4.3 Locate the report file that was created in Step 3.3.1.4.2 and rename it using the original filename automatically generated by the drum assay system (Example: Z-211-102_20040209180510_10007475_p.rpt).

3.3.1.4.4 Open the expert technical review data transfer application by double clicking on the ETR Data Transfer icon.

3.3.1.4.5 Click on the SELECT AN ANALYSIS FILE BY NAME button.

3.3.1.4.6 Select the analysis report file that was renamed in Step 3.3.1.4.3 and click on the SELECT ANALYSIS FILE button.

3.3.1.4.7 Confirm that the summary data fields in the Analysis File section of the Assay Analysis window are populated and that the following data are correct for the drum that is undergoing expert technical review:

- Container ID
- Instrument ID
- Report Date
- Machine Sequence.

3.3.1.4.8 If the summary data do not populate as expected, investigate the cause of the anomaly and take corrective action as necessary.

3.3.1.4.9 Click on the SET REVIEW OUTCOME button on the Assay Analysis window.

NOTE 1: *At least one of the electronic signatures required to update the Review Outcome in WTS using the ETR Data Transfer utility is associated with the ETR role in WTS.*

NOTE 2: *Steps 3.3.1.4.10 to 3.3.1.4.12 may be omitted if the ETR/ITR chooses to set the review outcome to "modify" in WTS rather than by using the ETR Data Transfer utility.*

3.3.1.4.10 Ensure that two independent ITR/ETRs enter their WTS user IDs and e-signature PINs, and any comments, as required, to set the WTS review outcome to "modify" in the Set Review Outcome section of the Assay Analysis window.

3.3.1.4.11 Click on the SUBMIT button.

NOTE: *If the status message "Review Outcome Set" does not appear in the Set Review Outcome section of the Assay Analysis window, then the review outcome was not successfully set to "modify" in WTS.*

3.3.1.4.12 Investigate the cause of this anomaly and take corrective actions as required.

3.3.1.4.13 Click the RE-TRANSMIT DATA button on the Assay Analysis window.

3.3.1.4.14 ETR: When making the data update in WTS, enter the WTS user ID and E-signature password in the Re-transmit data section of the Assay Analysis window.

3.3.1.4.15 Click on the RE-TRANSMIT FILE ABOVE button on the Assay Analysis window.

3.3.1.4.16 ETR: Enter comment in the comment section of the assay datasheet in WTS to justify modifications to assay results.

NOTE 1: *There are threshold limits for both boxes and drums which, when reached, dictate specific requirements per INST-OI-11, Waste Container Handling. These threshold limits are: 200, 380, or 1,500 FGE ^{239}Pu for drums; and 325, 380, 800, or 1,500 ^{239}Pu FGE for boxes.*

(EDF-0034, CWR 7.3.1; 7.3.2; 7.3.7; 7.3.9 and 7.3.10)

NOTE 2: *Failure to immediately notify the plant shift manager (PSM) could result in a criticality safety violation if the container is upgraded to higher than 380 FGE and the container is not relocated (within the same shift) to the proper storage array.*

(EDF-0034, CWR 7.3.7)

3.3.1.4.17 If an expert technical review is done and the ETR determines that the FGE amount for a given waste container needs to have a new, corrected value which exceeds one of the threshold values, then immediately contact the applicable PSM and receive acknowledgment that they understand the change in the FGE for that particular waste container now exceeds a threshold.

(EDF-0034, CWR 7.3.7)

3.3.1.4.18 ETR: Notify the ITR when the review is complete and inform the ITR whether a new report file was generated during the ETR review.

3.3.1.4.19 ITR: Restart at Step 3.3.1.2.6.

3.3.1.4.20 If review of the data indicates that the item(s) not meeting the Data Review Criteria may have caused a bias in the reported results and acceptable results are not obtainable with the existing data, perform the following steps:

3.3.1.4.20.1 Disposition the drum as nonreportable and add comments in WTS to document the reason for the bias.

NOTE: *If a previous NCR exists for the same deficiency, it is not necessary to generate a new NCR.*

3.3.1.4.20.2 Reference the existing NCR, adding a comment to the existing NCR to document the nonreportability of the container in the affected batch.

3.3.1.4.20.3 Generate an NCR, if one does not already exist, in accordance with MP-Q&SI-5.4, stating the deficiency.

3.3.1.4.20.4 Flag in WTS, as applicable.

3.3.1.4.21 If review of the data indicates that the item(s) not meeting the Data Review Criteria has not caused a bias in the reported results, then disposition the drum as "Accept" and add comments in WTS to document the rationale for accepting the data as-is.

3.3.1.5 Repeat Steps 3.3.1.3 through 3.3.1.4 for each assay event in the batch being reviewed.

NOTE 1: *To assist in the entering of comments and to provide consistency in format and content for these comments, Macro Express has been established for use by the ITR/ETR.*

NOTE 2: *Macro Express is a utility that enables the reviewer through the use of a couple of keystrokes (Hot Keys) to input repetitive comments*.

3.3.1.6 Activate Macro Express by double clicking on its icon that is located on the desk top of the data review PC.

3.3.1.6.1 Edit the comment, as appropriate.

3.3.1.6.2 Activate Hot Keys (i.e., Alt + F7) to enter appropriate comments in sections.

3.3.1.6.3 Create a new paragraph for each disposition comment.

3.3.1.6.4 Review the comment(s) to ensure that it is the desired comment before proceeding.

3.3.1.7 Print manual BDRs, if necessary, as follows:

3.3.1.7.1 Select the Batch Data Reports option.

3.3.1.7.2 Enter “ASY” for the Batch Type and enter the Batch ID.

3.3.1.7.3 For manual BDRs, select the following reports on the Batch Data Report Screen:

- Coversheet
- Analysis Report
- QC Event Report.

3.3.1.7.4 Select the printer name and “Generate” to print the report.

3.3.1.8 Confirm all changes to original data or forms are made by a single line through incorrect entry, initialed, and dated by the person making the change.

3.3.1.9 Confirm that the data changes made during expert review are adequately justified.

NOTE: *NDA-2000 software performs all calculations; however, if during re-analysis hand calculations were used, they will be verified and validated.*

3.3.1.10 Confirm that 100% of hand calculations have been verified and validated correctly.

NOTE 1: *NDA-2000 software doesn't require values to be hand entered; however, if parameter values are changed during re-analysis, they will be verified and validated correctly and noted on Form-1416.*

NOTE 2: *NDA-2000 ITR checks will verify this question based on limits set for each modality.*

3.3.1.11 Confirm that the assay measurements are within the system calibration range and technical envelope as defined in calibration reports, TMU analysis, and calculation methodologies, and that the data are reasonable.

NOTE: *The procedure number and revision are entered in the Drum Results comment field, if the procedure number and revision are noted incorrectly in the WTS.*

3.3.1.12 Confirm that the proper procedures were used to generate the data in this batch.

3.3.1.13 Confirm that the assay system successfully participated in the current performance demonstration program (PDP) cycle.

3.3.1.14 Confirm that any NCRs associated with the characterization data are identified and included or referenced in the BDR.

3.3.1.15 Verify that the BDR is complete and includes the following, as applicable:

A. A batch coversheet that contains the date of report, batch number, facility, equipment ID, batch open and closed date, and a listing of all drums in the batch

B. Table of Contents (manual review only)

C. Form-1416

D. Form-1491

E. Supplemental Batch Data Report Narrative, if applicable

F. Radioassay data sheets for each container in the batch

G. QC Event Report(s): DPC and DBC

H. Associated NCRs (referenced in WTS).

NOTE: *Nonconformance reports may be open against containers within the batch because the container requires recharacterization or treatment. The NCRs will remain open until the recharacterization or treatment process has been completed and validated, or the action is no longer required.*

3.3.1.16 Confirm that NCRs have been generated for containers that failed to meet DQOs or QAOs.

3.3.1.17 Record any Weekly Performance Check (WPC) data on Form-1446, Drum Assay System (DAS) WPC 6 Month Operability Range Check.

3.3.1.17.1 Include start date, assay date, and review initials for the appropriate WPC and system, as applicable.

3.3.1.17.2 If all WPCs have been assayed, complete end date, reviewed by, and send to the SPM for review.

3.3.1.18 When validation has been completed, approve and release the batch using the electronic signature process in WTS or print, sign, and date Form-1416.

3.3.2 Supplemental BDRs for Adjusted TRU Alpha Activity Concentration

NOTE: *This section applies only if a manual BDR was generated.*

3.3.2.1 Verify the revised assay analysis reflecting the TRU alpha activity concentration recalculation has been reviewed and the original analysis is supplemented with the revised analysis in the BDR.

3.3.2.2 Verify the supplemental BDRs used to correct container(s) data after container(s) in a BDR has been through the SPM for a variety of reasons, e.g., TAAC corrections, RTR VE updates, etc.

3.3.2.3 Verify the supplemental assay batch narrative has been generated to document the inclusion of the updated container analysis in the BDR and reference the NCR number associated with the updated disposition of containers with prohibited items (e.g., liquids being absorbed) for the container(s) affected.

3.3.2.3.1 Ensure NCRs associated with recharacterization or treatment are closed prior to ITR sign off of the supplemental manual BDR.

3.3.2.4 Sign the supplemental narrative and promote the batch to SPM.

4.0 DEFINITIONS

Data quality objectives. Qualitative and quantitative statements derived from the outputs of the first six steps of the DQO process. DQOs: (1) clarify the study objective; (2) define the most appropriate data to collect, (3) determine the most appropriate conditions from which to collect the data, and (4) specify tolerable limits on decision errors be used on the basis for establishing the quantity and quality of data needed to support compliance decisions. DQO are used to develop a scientific and resource-effective data collection design.

Quality assurance objectives. Qualitative and quantitative statements that specify WIPP program technical and quality objectives. Data characteristics of importance are accuracy, precision, completeness, comparability and representativeness.

Radioassay. Characterization method used to identify and quantify radionuclides in *transuranic waste* (see def.).

Real-time radiography. A radiographic method that allows simultaneous remote imaging for the viewing of waste package contents.

Transuranic waste. Wastes contaminated with alpha-emitting radionuclides of atomic number greater than 92 (e.g., the radioactive isotopes of plutonium), with half-lives greater than 20 years, and are present in concentrations greater than 100 nanocuries per gram of waste.

Validation. A systematic process used to review data to ensure that the required data quality characteristics have been obtained. Results of the review may require qualifiers to be placed on the use of the data.

Visual examination. Characterization method that involves opening a container and physically examining its contents.

Waste stream. Waste materials that have common physical form, that contain similar hazardous constituents, and that are generated from a single process or activity.

5.0 REFERENCES

(1) AMWTP HWMA/RCRA Permit

(2) EDF-0034, Criticality Safety Analysis for TRU Waste Storage

(3) Form-1215, Analytical Balance Calibration Check Sheet

(4) MP-DOCS-18.2, Records Management

(5) MP-TRUW-8.1, Certification Plan for INL Transuranic Waste

(6) MP-TRUW-8.2, Quality Assurance Project Plan

(7) MP-TRUW-8.13, Collection, Review, and Management of Acceptable Knowledge Documentation

(8) MP-Q&SI-5.4, Identification of Nonconforming Conditions

(9) INST-FOI-01, In-Plant Drum Assay Operations

(10) INST-FOI-17, Facility Visual Examination Operations

(11) INST-OI-11, Waste Container Handling

(12) INST-OI-12, Real-Time Radiography Examinations (Certification Scans)

(13) INST-OI-14, Drum Assay Operations

(14) INST-OI-34, Non-Facility Visual Examination Operations

(15) RPT-NFCS-07, Criticality Safety Evaluation for the AMWTF

(16) RPT-NFCS-08, Criticality Safety Evaluation for AMWTP Retrieval Operations

(17) RPT-TRUW-03, Drum Assay Technical Review Report

6.0 RECORDS

Records generated by this procedure are classified in accordance with the table below and dispositioned in accordance with MP-DOCS-18.2, Records Management.

Record Description	Classification
MP-TRUW-8.8, Case File	Nonpermanent/WIPP ENV1-J-1/Destroy 10 years after submittal
Batch Data Report: may contain the following: • Form-1412, Real-Time Radiography Independent Technical Reviewer Checklist • Form-1415, Visual Examination Independent Technical Reviewer Checklist • Form-1416, Radioassay Independent Technical Reviewer Checklist • Form-1446, Drum Assay System (DAS) WPC 6-Month Operability Range Check • Form-1491, Batch Data Report Supplemental Comment Form	Lifetime WIPP/ENV1-J-1/Turnover to CBFO at end of project

7.0 EXHIBITS

None

8.0 APPENDICES

None

Level II Data Validation

Advanced Mixed Waste Treatment Project

Approval:

(*Signature on file. See DCR-12338.*) 06/25/13

Date

AMWTP MANAGEMENT PROCEDURE		
MP-TRUW-8.9, Rev. 26	Issued: 06/26/13	Effective: 06/27/13
Level II Data Validation		

REVISION LOG

Revision Number	Date Approved	Pages Affected	Description of Revision
0	07/17/02	All	Initial issue. DCR-2002-1306
1	11/21/02	A18, A27, A32, A38, A43, A47	DCR-1759: Changed revision number from 0 to 1. Added "AMWTP HWMA/RCRA Storage Permit" to note the requirement.
2	02/10/03	Various	DCR-1215: Changed revision number from 1 to 2. Added Manual validation process to procedure. Removed checklist from procedure and created forms.
3	03/28/03	All	DCR 2163: Change effective date from "When DOE Approves Retrieval Operations" to March 28, 2003
4	05/02/03	All	DCR 2199: Incorporate CBFO comments. Comments incorporated and verbally approved by CBFO on 05/02/2003.
5	09/25/03	All	DCR-2378: Incorporate additional guidance per CBFO Certification Audit A-03-05, CBFO CAR 03-072
6	04/08/04	Various	DCR-2842: Addition of form (Form-1554, Site Quality Assurance Officer – HGAS On-line HSG Sampling and Analysis Checklist) for SQAO validation of headspace gas data acquired on the new HGAS instruments; minor corrections/editorials to Form-1387.
7	04/22/04	Various	DCR-2907: New section on drum file management added to better define manual process and in response to CAR-4465 corrective actions. New text added to define NCR process with respect to WIPP-WAP and WIPP-WAC requirements in response to CAR-4634 corrective actions.
8	04/28/04	17 and 18	DCR-2976: Change Title of Technical Administrator to Waste Programs Data Management Specialist. Delete Step 4.4.5, which is redundant to steps in MP-TRUW-8.11 and includes reference to Form-1569 which will not be implemented.

AMWTP MANAGEMENT PROCEDURE		
MP-TRUW-8.9, Rev. 26	Issued: 06/26/13	Effective: 06/27/13
Level II Data Validation		

Revision Number	Date Approved	Pages Affected	Description of Revision
9	08/12/04	4 and 14	DCR-3243: Incorporate CBFO Comments. Delete the sentence "The WAP requires AK confirmation to be performed during characterization activities, not during data validation. Inclusion of initiating an NCR if there is a problem with the batch or the DGL validation.
10	01/13/05		DCR–3353. Incorporate CH-TRAMPAC, Rev 1, and CH-WAC, Rev 2, requirements. Incorporation of CBFO DRR comments. Minor editorial changes. Incorporate WIPP Comments from Revision 10B
11	04/14/05	P2, 3, 16 Various	DCR-4225. Incorporate Summa Sampling and Analysis. Create new Forms 1620, 1621, 1622, 1623 and include in Records section. DCR-4225-B. Incorporate CBFO comments
12	02/16/06	All	DCR-4674. Incorporate numerous process improvements in this document and in associated forms.
13	05/15/06	Various	DCR-4912. Change all Core Sampling references to Solid Sampling. Other editorial clarifications throughout procedure.
14	7/10/06	9 and 11	DCR-5092. Minor change to add "for manual batches" at the end of Steps 3.1.10 and 3.2.7 and to change the order of Steps 3.2.7 and 3.2.8.
15	1/05/07	All	DCR-5474. Complete rewrite to incorporate the changes required by CBFO to reflect the WAP 311 modifications. Incorporate CBFO DRR comments.

Revision Number	Date Approved	Pages Affected	Description of Revision
16	02/20/07	Pages 1, 4 and Step 3.2.5	DCR-5741. Revise 1st paragraph of Section 1 to clarify HSGS validation requirements; Delete Step 3.1, 5th bullet which is not required as it was incorporated in Section 1 and add new Step 3.2.5 to address WTS requirement to complete a checklist before promoting to reconciliation.
17	03/25/08	Various	DCR-6033. Deleted references to MP-TRUW-8.3 being cancelled in support of CCP transition, and other editorial changes in accordance with MP-DOCS-18.3.
18	7/15/08	Page 10	DCR-7122. Revised to ensure quarterly reviews are completed.
19	07/31/08	Page 7	DCR-7367. Add information "or electronic NCR report" for clarification.
20	9/30/08	Page 7	DCR-7536. Clarify note on page 7 per audit observation (A-08-19).
21	06/07/10	Pg 2 and 7	DCR-9224. Incorporated the WIPP permit modification for liquids, VE, and NCRs.
22	07/19/10	Pg 9 Note	DCR-9409. Change "5 calendar days" to "7"calendar days" to be consistent throughout.
23	10/27/10	Various	DCR-9556. As part of AI 52095, moved "batch data report" information out of Section 3.0 to Section 4.0, Definition.
24	08/25/11	Pages 2 and 6	DCR-10153. To address CAR 61367, revised/added responsibilities for SPM in Section 2.0 and added new Steps 3.1.8 and 3.1.9. To address AI 63986, deleted some data management specialist responsibilities and deleted all of Section 3.3.
25	10/09/12	Cover page	DCR-11681. Applied ITG-BLUESHEET-078. Updated document owner.
26	06/25/13	Various	DCR-12338. Incorporated the WIPP Class 2 PMR to revise the WAP waste characterization methods dated 3/13/2013 and the WIPP Waste Acceptance Criteria Rev. 7.4, dated 4/22/13.

TABLE OF CONTENTS

1.0 PURPOSE/SCOPE 1

2.0 ROLES AND RESPONSIBILITIES 2

3.0 PROCEDURE 3

3.1 Validation by the SPM 3

3.2 Supplemental Batches 6

3.3 Quarterly Review 7

4.0 DEFINITIONS 8

5.0 REFERENCES 8

6.0 RECORDS 9

7.0 EXHIBITS 9

8.0 APPENDICES 9

AMWTP MANAGEMENT PROCEDURE		
MP-TRUW-8.9, Rev. 26	Issued: 06/26/13	Effective: 06/27/13

Level II Data Validation

1.0 PURPOSE/SCOPE

This management procedure (MP) is used to document the Project Level Data Validation performed by the Site Project Manager (SPM) at the Advanced Mixed Waste Treatment Project (AMWTP), as required by MP-TRUW-8.2, Quality Assurance Project Plan, and MP-TRUW-8.1, Certification Plan for INL Transuranic Waste. MP-TRUW-8.2 defines the requirements for validation of real-time radiography (RTR) and visual examination (VE). MP-TRUW-8.1 defines the requirements for validation of radioassay (RA), RTR, and VE in accordance with DOE/CBFO-94-1012, Quality Assurance Program Document.

The validation steps in this procedure require Project Level reviewers to complete checklists in the Waste Tracking System (WTS) or on controlled checklists or forms for batches that have been validated at the Data Generation Level (Level 1). The SPM completes checklists on batches that have been approved by the Independent Technical Review (ITR). All applicable data collected shall be validated. Validation shall include reviewing relevant documentation to evaluate technical adequacy, completeness, the suitability for intended use, and the adequacy of the Acceptable Knowledge (AK) record, as well as documentation of the data review. Data validation shall be controlled to permit independent reproducibility by another qualified individual.

The SPM also reviews each container in the *batch data report* (BDR; see def.) for consistency with the assigned waste stream documentation (e.g., Environmental Protection Agency [EPA] Hazardous Waste Number [HWN] assignments, radioisotope data, and physical form). Inconsistencies are documented and incorporated into the AK record as appropriate (see MP-TRUW-8.13, Collection, Review, and Management of Acceptable Knowledge Documentation).

2.0 ROLES AND RESPONSIBILITIES

Performer	Responsibilities
SPM	• Reviews 100% of the BDRs generated as a result of waste characterization activities prior to any of the associated waste being shipped to the Waste Isolation Pilot Plant (WIPP) • Verifies completion of BDRs and ensures all data are properly reported (e.g., correct units, correct significant figures, and correct qualifying flags) • Verifies testing batch Quality Control (QC) checks are properly performed as defined in MP-TRUW-8.1 and MP-TRUW-8.2 • Verifies batch QC checks are performed, meet the established Quality Assurance Objectives (QAOs), and are within established data usability criteria • Verifies proper procedures were followed to ensure that data were collected in a technically correct manner • Completes the appropriate Project Level Validation and Verification Checklist • Generates nonconformance reports (NCRs) for characteristic and documentation deficiencies that render the quality of the data unacceptable or indeterminate • Generates Corrective Action Reports (CARs) for conditions adverse to quality and prevent their recurrence • Reviews NCRs and verifies that corrective actions have been appropriately dispositioned • Reports nonadministrative nonconformances, which are first identified at the SPM review (i.e., failure to meet a data quality objective), to WIPP by written notification within 7 calendar days after identification and provides the NCR to WIPP within 30 calendar days of identification of the incident • Responsible for nonconformance identification and documentation of all WIPP-related NCRs • Releases the BDRs by signature and date upon completion of reviews • Ensures Level I quarterly review is complete.
Waste Programs Data Management Specialist	• Transfers manual BDRs and associated checklists to Records Management.

3.0 PROCEDURE

NOTE: *The SPM validation occurs for each container in the BDR. The SPM review occurs as soon as practically possible in order to determine and correct negative quality trends. The SPM and data validation summaries are combined and included as part of the BDR and SPM data review checklist.*

3.1 Validation by the SPM

NOTE 1: *This section applies to both electronic and manual validation unless otherwise specified.*

NOTE 2: *All characterization BDRs must have ITR validation complete with signature release prior to SPM review.*

3.1.1 Access an approved batch from the WTS, or obtain a manual BDR from the Waste Programs Data Management Specialist, and use the following data review checklists, as applicable:

- Form-1397, Site Project Manager RTR Data Validation Checklist
- Form-1398, Site Project Manager Visual Examination Validation Checklist
- Form-1399, Site Project Manager RA Data Validation Checklist.

3.1.2 For manual BDR checklists, indicate the batch number being validated on each page of the checklist.

3.1.3 RTR, VE, and RA characterization batches require a comparison of container data with AK documentation, with the results documented on the applicable questions of the SPM validation checklists.

NOTE: *The SPM data validation summary checklists include all aspects of the BDR that affect data quality. The BDR and checklists identify the BDR number, identify a list of container numbers, and describe the validation and whether or not problems were detected (e.g., NCRs). Summaries are combined and include a signature release.*

3.1.4 Complete the data review and ensure that the BDR is complete, that data are reported properly, and that proper procedures were followed.

3.1.4.1 Complete all questions on checklist with “YES,” “NO,” or “N/A,” as appropriate.

3.1.4.2 If a question is answered in a different way than the response by the reviewer, then evaluate the impact and enter comments as appropriate.

3.1.5 Verify that the characterization results meet the program Quality Assurance (QA)/QC criteria, that instrument performance criterion have been met, and that the data quality objectives (DQOs) and QAOs for the subject characterization have been met, as referenced on the validation checklists.

NOTE: *Form-1491, Batch Data Report Supplemental Comment Form, is used for manual validation only.*

3.1.6 Document all concerns and comments using the appropriate checklists or Form-1491.

3.1.6.1 Use comments column on the applicable checklist to clarify review as appropriate, to document specific items of objective evidence used in review, and to document specific concerns.

3.1.7 Confirm through validation review that NCRs have been issued for:

- Containers with nonconforming conditions affecting data quality, instrument performance criteria, and DQOs or QAOs
- Containers found to contain prohibited items.

NOTE 1: *For any nonadministrative nonconformance related to applicable requirements specified in MP-TRUW-8.2, which are first identified during SPM batch data review (i.e., failure to meet a DQO), Carlsbad Field Office (CBFO) shall receive written notification within 7 calendar days of identification in accordance with MP-Q&SI-5.4, Identification of Nonconforming Conditions.*

NOTE 2: *The confirmation team will examine NCR documentation for each container selected for confirmation to verify NCRs have been dispositioned.*

3.1.8 If characterization related QAOs/DQOs are not met, then generate an NCR in accordance with MP-Q&SI-5.4.

3.1.9 If an NCR has not been issued, notify the ITR, ITR Lead, and RTR SME and evaluate potential operator performance problems.

3.1.10 If the operator performance evaluation determines a programmatic issue, ensure that a Type-1 NCR has been generated.

3.1.11 If an NCR has been generated or a batch requires rework, then take the following steps:

3.1.11.1 Complete review of the checklist to ensure that all items requiring rework are identified before batch rejection.

3.1.11.2 Demote the batch to the ITR.

3.1.11.3 Document the NCR number or rework requirements as reasons for batch rejection using the appropriate data review checklist, batch comment, or Form-1491.

3.1.12 Confirm that all applicable NCRs and their status are documented on the manual BDR narrative or electronic NCR report.

NOTE: *For manual BDRs, any changes or corrections will be lined through, initialed, and dated by the person making the change. No data entries shall be obliterated or made otherwise illegible through writing over or other means.*

3.1.13 If a batch is demoted to Level I for changes and re-approved to the SPM level, then review all changes and confirm that corrective actions have been completed or appropriately generated for all nonconformances and that the condition that led to the NCR has been dispositioned.

3.1.14 Ensure that applicable NCRs documented in TrackWise are consistent with those identified in WTS.

3.1.15 Approve and release the data by electronic or manual signature.

NOTE: *Data Management must be notified when validation is complete for manual BDRs.*

3.1.15.1 Print, sign, and date completed checklist(s) and give batch to Waste Programs Data Management Specialist.

3.1.15.2 Waste Programs Data Management Specialist: Complete pagination of the manual BDR and all associated checklists.

3.1.15.3 Waste Programs Data Management Specialist: Ensure all pages in the BDR are in numerical order and legible.

3.1.15.3.1 Ensure any truncated fields have been expanded to full text and are legible.

3.1.15.3.2 Verify each page in the BDR is complete, legible, and contains the correct batch number.

3.1.15.3.3 Transfer manual BDR to the SPM for final review and BDR cover page sign-off completion.

3.1.15.4 SPM: Ensure that pagination is correct and sign SPM release on the BDR cover page. Return the batch to the Waste Programs Data Management Specialist.

3.1.15.5 Waste Programs Data Management Specialist: Transfer manual BDR with all associated checklists to Records Management in accordance with MP-DOCS-18.2, Records Management.

3.2 Supplemental Batches

NOTE: *The same checklist forms used for the original batch are used for supplemental batches. Since the scope of the validation is limited to the change or update, the response to some questions will be "N/A." Comments may also be recorded on Form-1491.*

3.2.1 Access a Level I approved batch from WTS, or obtain the manual BDR and appropriate data review checklists as identified in Section 6.0, Records.

3.2.2 For manual batches, indicate the batch number with the word "Supplement" following it on each page of the checklist.

3.2.3 Indicate the response to each question, enter comments, and affix attachments as necessary.

3.2.4 For assay batches, ensure the RA Analysis sheet(s) have been updated to reflect the applicable change or update.

3.2.5 For any nonadministrative nonconformance related to applicable requirements specified in MP-TRUW-8.2, which are first identified at the SPM signature release (i.e., failure to meet a DQO), ensure CBFO receives written notification within 7 calendar days of identification in accordance with MP-Q&SI-5.4.

3.2.6 Coordinate any necessary rework with Level I. Issue NCRs as necessary to document inadequacies.

3.2.7 If manual BDR, ensure that pagination is correct and sign SPM release on the BDR cover page.

3.2.7.1 Return the BDR to the Waste Programs Data Management Specialist.

3.2.8 If electronic BDR, notify Data Management BDR is complete.

3.2.9 Waste Programs Data Management Specialist: If manual, transfer BDR with all associated checklists to Records Management per MP-DOCS-18.2.

3.3 Quarterly Review

3.3.1 SPM: At least once each quarter (every 3 months), ensure that the Level I review, validation, and verification are repeated on the data for a minimum of one randomly chosen waste container.

3.3.1.1 Ensure this quarterly review is scheduled and reported in accordance with MP-M&IA-17.3, Quality Assurance Surveillances.

NOTE: *The SPM will review and evaluate the Level I quarterly review in Trackwise.*

3.3.1.2 Ensure Level I quarterly review is complete according to implementing procedures.

4.0 DEFINITIONS

Batch data report. The following batch types are generated for data validation, verification, and quality assurance (QA) activities:

- Testing BDRs include all data pertaining to RTR, RA, and VE batches.
  - RTR and VE batches consist of up to 20 waste containers without regard to waste matrix. These BDRs include data collection results, QC documentation, videotapes as applicable, and the appropriate data review checklists (either hard copy or electronic equivalent).
  - RA batches are defined as a suite of waste containers undergoing radioassay using the same testing equipment. The size of the testing batch will vary based on operational needs, without regard to waste matrix. BDRs consist of background and performance data for the time period of the batch, measurement results, and the appropriate data review checklists (either hard copy or electronic equivalent).
- Supplemental batches are generated at Level I validation for purposes of updating the record with new characterization information obtained from treatment or any other change affecting the original analysis. For RTR and VE, the new information may also be captured on the RTR/VE update (RVU) analysis sheet.
- Manual supplemental batches are also generated to correct administrative errors to batches previously validated through SPM. For these types of administrative corrections or updates, new validation checklists are not required. The supplemental batch shall include a cover page with a narrative explaining the change or update, and a signature field for each level of validation to sign and date the acknowledgement of the change or update.

5.0 REFERENCES

(1) DOE/CBFO-94-1012, Quality Assurance Program Document

(2) MP-DOCS-18.2, Records Management

(3) MP-Q&SI-5.4, Identification of Nonconforming Conditions

(4) MP-M&IA-17.3, Quality Assurance Surveillances

(5) MP-TRUW-8.1, Certification Plan for INL Transuranic Waste

(6) MP-TRUW-8.2, Quality Assurance Project Plan

(7) MP-TRUW-8.13, Collection, Review, and Management of Acceptable Knowledge Documentation

6.0 RECORDS

Records generated by this procedure are classified in accordance with the table below, and dispositioned in accordance with MP-DOCS-18.2, Records Management.

Record Description	Classification
MP-TRUW-8.9, Case File	Nonpermanent WIPP ENV1-J-1 /Destroy 10 years after being superseded.
Batch Data Report consisting of the following (as appropriate): • Form-1397, Site Project Manager RTR Data Validation Checklist • Form-1398, Site Project Manager Visual Examination (VE) Validation Checklist • Form-1399, Site Project Manager RA Data Validation Checklist • Form-1491, Batch Data Report Supplemental Comment Form	Lifetime WIPP Records/ENV1-J-1/ Turnover to CBFO at end of project

7.0 EXHIBITS

None

8.0 APPENDICES

None

Data Reconciliation

Advanced Mixed Waste Treatment Project

Approval:

(*Signature on file. See DCR-12226.*) 06/07/13

Date

REVISION LOG

Revision Number	Date Approved	Pages Affected	Description of Revision
0	07/22/02	All	Initial issue. DCR-2002-1267
1	09/05/02	22	DCR-1467: Changed revision number from 0 to 1. Changed reference 50 CFR to "40 CFR."
2	09/26/02	Page 26	DCR-1539: Changed revision number from 1 to 2. Added information to Step 4.4.14 & Section A.2 of Appendix A
3	12/10/02	O2 & O3 of 3	DCR-1768: Changed revision number from 2 to 3. Added clarification to Purpose/Scope and corrected formula on pages O1-O2.
4	3/28/03	4, O1-O2	DCR 2163: Change effective date from "When DOE Approves Retrieval Operations" to March 28, 2003
5	05/05/03	All	DCR 2196: Edited procedure in response to CBFO comments
6	04/27/04	All	DCR-2900: Edited procedure to clarify and better define the manual reconciliation process in response to corrective action from CAR-4465.
7	08/19/04	All	DCR-2997: Clarified statement on flammability evaluation. Added in specific procedure step for DAC evaluation for clarification. Removed redundant statement in the TIC evaluation. Added in procedure steps for managing solid sampling lots. Minor editorial/format changes. Implemented corrective actions from CAR 8217 (CBFO CAR 04-033, Rev. 1) and separated the manual and the electronic data reconciliation process, which resulted in the addition of four new sections. Other sections were moved to the end of the document following the new sections. Therefore, rev bars show all the movement within the document including format/editorial changes. Added steps for lot list verification.

Revision Number	Date Approved	Pages Affected	Description of Revision
8	12/06/04	Various	DCR-3310. Added TAAC and FGE checks. Added new Steps 4.2.1.1.3 through 4.2.1.1.5 to perform checks. Incorporated CBFO Post-Audit comments. Editorial/format changes to comply with DOCS-18.3 and 18.4. Added Resolutions to CBFO review comments from 11/9/04 Conference.
9	01/05/05	Various	DCR-4057. Removed TAAC and FGE checks, which will be incorporated into MP-TRUW-8.16, WWIS Data Transfer. Steps 4.1.1.1.2 through 4.1.1.1.5 were deleted. Incorporated CBFO comment resolutions in Section 2.0 and Steps 4.2.3.2 and 4.5.4.2.
10	06/16/05	Various	Added Appendix A, instruction for compiling HSG data for supercompaction of 55-gallon drums. Introduction of new Form-1630, HSG Compilation Data Sheet. Various formatting/editorial changes.
11	01/09/06	Section 4.2.4.2.	DCR-4473. The entire document has been revised, so revision bars have NOT been used to indicate changes. Modify for 100-gallon product drum manual reconciliation. Modify to align electronic reconciliation steps with WTS. Add language to assure each container contains at least one TRU isotope above MDA. Evaluate MDL instruction for solid sampling and headspace gas sampling. Various formatting/editorial changes to comply with current version of MP-DOCS-18.3. Add use of Form-1693. Periodic review.
12	02/14/2006	3.2.12.1, 3.2.17, 3.5.15.1, and 3.5.17	DCR-4813. Clarification of appropriate actions when nonconforming conditions are found. Addition of Waste Certification organization notification when reconciliation is complete.
13	06/29/06	3.2.11.4, Various,	DCR-4952. Clarification to use Form-1598, Table 1B for independent verification. Added 2 notes for clarification of the flammability evaluation and roles. Revised per attached draft. (Includes changes specific to updates for OSM)

Revision Number	Date Approved	Pages Affected	Description of Revision
14	1/05/07	Various	DCR-5243. Revised to implement the Waste Isolation Pilot Plant Hazardous Waste Facility Permit requirements resulting from the Section 311/Remote-Handled (RH) Permit Modification Request (PMR). Minor editorial changes made throughout.
15	08/08/07	Various	DCR-6015. Revised to further clarify the requirements of the Waste Isolation Pilot Plant Hazardous Waste Facility Permit Section 311/Remote-Handled (RH) Permit Modification Request (PMR). Minor editorial changes made throughout.
16	03/17/08	Various	DCR-6849. Added new steps for CAR 36376 that were implemented and deleted references in support of transportation transition to CCP.
17	08/11/08	Various	DCR-7388. Eliminate the use of manual drum files and add Appendix A, Guidelines for Determination of Manual or EV&V QA Records. Changes were made to satisfy the CAR# 40148 disposition.
18	09/07/10	Step 3.2.3	DCR-9009. Added RPT-TRUW-83 to step.
19	10/27/10	Step 3.2.14	DCR-9612. Changed references from “B3-2 through B3-9” to “C3-2 through C3-9” to implement the new numbering sequence from the new WIPP Permit Renewal.
20	11/1/10	Entire	DCR-9643. Revert content back to same as approved in revision 18 as changes identified for revision 19 must be held until MP-TRUW-8.2, Rev. 14 is issued.
21	11/16/10	Page 11 and 19	DCR-9649. Changed references from “B3-2 through B3-9” to “C3-2 through C3-9” to implement the new numbering sequence from the new WIPP Permit Renewal and change the definition of a waste stream.
22	03/03/11	Page 17	DCR-9777. Changes were made to satisfy CAR#57571, AI#59136 and CAR#57569.
23	07/03/12	Various	DCR-11028. Incorporated SCR-4032 and MP-TRUW-8.5 changes. Incorporated ITG-Bluesheet-073.

AMWTP MANAGEMENT PROCEDURE		
MP-TRUW-8.11, Rev. 25	Issued: 06/11/13	Effective: 06/12/13
Data Reconciliation		

Revision Number	Date Approved	Pages Affected	Description of Revision
24	09/25/12	Various	DCR-11546. Incorporated changes for termination of Settlement Agreement and Stipulated Final Order, No. HWB 04-07 (CO). Added guidance in Appendix A for manual ASY batch results (Change incorporated into MP-TRUW-8.5). Incorporated CBFO comments.
25	06/07/13	All	DCR-12226. Entire document revised. Document revised due to permit modification and after elimination of WIPP required headspace gas and coring requirements.

TABLE OF CONTENTS

1.0 PURPOSE/SCOPE 1

2.0 ROLES AND RESPONSIBILITIES 2

3.0 PROCEDURE 2

3.1 Create a Waste Stream Reconciliation Lot 2

3.2 Perform Data Quality Objective Reconciliation 4

3.3 Electronically Define the Waste Stream in WTS by Acceptable Knowledge 9

3.4 Perform Container Miscellaneous Characterization 10

3.5 Perform DQO Reconciliation Rework (Manual and/or Electronic) 11

4.0 DEFINITIONS 13

5.0 REFERENCES 14

6.0 RECORDS 15

7.0 EXHIBITS 15

8.0 APPENDICES 15

Appendix A – Guidelines for Determination of Manual or EV&V QA Records A1

AMWTP MANAGEMENT PROCEDURE		
MP-TRUW-8.11, Rev. 25	Issued: 06/11/13	Effective: 06/12/13
Data Reconciliation		

1.0 PURPOSE/SCOPE

The purpose of this procedure is to provide the policy and procedures for *reconciliation* (see def.) with the *data quality objectives* (DQOs; see def.) following data validation and verification by the Site Project Office (SPO). This reconciliation is performed at a *waste stream* (see def.) or waste stream *lot* (see def.) level.

The site project manager (SPM) reconciles data with the quality objectives following data validation and verification in accordance with MP-TRUW-8.2, Quality Assurance Project Plan. Project level reconciliation determines whether data of sufficient type, quality, and quantity have been collected for *real-time radiography* (RTR; see def.), *visual examination* (VE; see def.), and nondestructive assay (NDA). These confirmation data are correlated with existing *acceptable knowledge* (AK; see def.) information to form a final definition of a waste stream or waste stream lot.

There are references in this procedure to the Advanced Mixed Waste Treatment Project (AMWTP) Hazardous Waste Management Act (HWMA)/Resource Conservation and Recovery Act (RCRA) Permit as being a source requirement. This procedure was developed specifically to meet MP-TRUW-8.2 and MP-TRUW-8.1, Certification Plan for INL Transuranic Waste, requirements. Where AMWTP HWMA/RCRA Permit requirements are referenced, it is because the Waste Analysis Plan (WAP) for the Waste Isolation Pilot Plant (WIPP) and AMWTP HWMA/RCRA Permit requirements are consistent and the procedure demonstrates compliance with both permits.

The container units that will be reconciled are standard waste boxes (SWB) and drums (either 55 gallon, 85 gallon, or 100 gallon). All containers to be shipped will have to go through the DQO reconciliation process to confirm that the waste stream assignment is appropriate and that sufficient characterization has been performed. If the characterization data collected on the individual container was appropriate, the characterization on the collective container of the SWB or ten-drum overpack (TDOP) is considered to also be sufficient.

The tasks listed in this procedure must be completed to meet the intent and requirements of reconciliation; however, the tasks are not required to be completed sequentially.

2.0 ROLES AND RESPONSIBILITIES

Performer	Responsibilities
SPM or Designee/Acceptable Knowledge Expert (SPM/AKE)	• The SPM/AKE is the primary person performing all sections of this procedure.
2nd SPM or Designee/AKE	• Performs an independent secondary review of the data presented within the Container Information Summary report for manual reconciliation lots • Also performs an independent verification on all reconciliation lots to ensure there are no open NCRs.

3.0 PROCEDURE

3.1 Create a Waste Stream Reconciliation Lot

NOTE 1: *For purposes of efficiency, characterized waste containers from a waste stream or waste stream lot may be placed into a reconciliation lot. This reconciliation lot is solely for the purpose of reconciling waste characterization information with the DQOs for the particular waste containers.*

NOTE 2: *DQO reconciliation can be completed for manual batch data utilizing Electronic Data Management System (EDMS) or for electronic batch data in the Waste Tracking System (WTS) utilizing the Offsite Shipping Module (OSM).*

NOTE 3: *The quality assurance (QA) record will be utilized for data review. For manually validated batch data reports (BDRs), the QA record will be accessed through the EDMS and WTS will be referenced to ensure the latest valid data is being reviewed. For electronic validation and verification (EV&V) QA records, the record will be accessed and viewed in WTS. Appendix A contains guidelines for determination of manual or EV&V QA records.*

3.1.1 SPM or Designee/AKE: To group a set of containers from the same waste stream into a lot, use the criteria in the following substeps:

3.1.1.1 Access data in WTS to determine if the container is a candidate for reconciliation.

NOTE: *When performing DQO reconciliation utilizing the OSM in WTS, only containers which have completed all characterization analyses and validation activities will be displayed for inclusion in a reconciliation lot.*

3.1.1.2 Ensure all containers that are candidates for inclusion in a reconciliation lot complete all characterization analyses and validation prior to completing any reconciliation activities. At a minimum, ensure each container has completed RTR or VE, and assay.

3.1.1.3 Verify that there are no open nonconformance reports (NCRs) against containers in the lot, including associated source containers, puck drums, and batch data reports, utilizing the TrackWise database per MP-Q&SI-5.4, Identification of Nonconforming Conditions.

3.1.1.3.1 Document this verification on Form-1597, Reconciliation with Data Quality Objectives, and/or in the OSM DQO Checklist.

3.1.1.4 Remove containers with outstanding issues, as identified in Steps 3.1.1.2 through 3.1.1.3 above, from consideration for DQO reconciliation.

NOTE: *When performing DQO reconciliation utilizing the OSM in WTS, a lot number will be automatically assigned. The first lot number used for a waste stream in WTS will be the same number as the Waste Stream Profile Form (WSPF) with a ".0001" affixed to the end, for example, BN510.0001 with subsequent lots being numbered BN510.0002, BN510.0003, etc. Utilizing this format will ensure reconciliation lot numbering in OSM does not duplicate previous manual reconciliation lots.*

3.1.1.5 Control and define lots by assigning each lot a unique number as follows:

A. The first lot from a waste stream will be assigned the same number as the WSPF with a ".01" affixed to the end. For example, for the first reconciliation lot supporting WSPF BNINW276, the lot will be numbered BNINW276.01.

B. Subsequent reconciliation lots will be assigned the next sequential available number. For example, the second reconciliation lot for a waste stream will be numbered BNINW276.02, the third lot will be numbered BNINW276.03, and so on.

3.2 Perform Data Quality Objective Reconciliation

NOTE: *Reconciling the results of waste testing and analysis with the DQOs ensures that data are of adequate quality to support regulatory compliance.*

3.2.1 Ensure all containers characterized for WIPP are reconciled before shipment.

3.2.2 If the lot is the first lot in a waste stream, ensure Form-1195, Waste Stream Profile Form, and Form-1598, Characterization Information Summary Report, are prepared in accordance with MP-TRUW-8.14, Preparation of Waste Stream Profile Forms.

NOTE 1: *When performing DQO reconciliation utilizing the OSM in WTS, the DQO Checklist in WTS is required to be completed. Completion of Form-1597 and Form-1598 is not necessary when utilizing OSM for a Data Reconciliation Lot.*

NOTE 2: *The final flammability evaluation for shipment and certification is completed by Central Characterization Project (CCP) utilizing the WIPP TRAMPAC Evaluation Software (WTES) as described in the DOE/WIPP-09-3427, Waste Data System User's Manual.*

3.2.3 SPM/AKE: Verify that the waste characterization confirms the AK history regarding physical form of the waste, base materials composing the waste, hazardous constituents, and radioactivity present in the waste by performing the steps in this section and documenting on Form-1597 or the DQO Checklist in WTS.

3.2.4 If RTR or a VE is required, then confirm that the selected containers in the reconciliation lot have undergone the appropriate characterization technique.

3.2.4.1 Ensure that the physical form confirms the AK description of the waste and that all containers have been assigned to the correct *waste matrix code* (WMC; see def.).

NOTE *Several checks are in place throughout the process to ensure that a container contains materials that are consistent with the waste stream and that the values reported are correct. Therefore, the only check required at this point in time is to confirm that the appropriate data have been collected by RTR or VE and validated with no outstanding.*

3.2.4.2 Ensure that waste material parameter weights have been established for each container in the lot.

3.2.5 For a 100-gallon product drum, confirm each puck drum has a feedstock item description code (IDC) identified in RPT-TRUW-30, Acceptable Knowledge Summary for Supercompacted Debris Waste (BN510), or RPT-TRUW-83, Acceptable Knowledge Summary for Supercompacted Debris Waste (BN510.1), and all appropriate characterization data are complete and validated with no outstanding issues.

3.2.6 Ensure that each container in the lot contains no prohibited items.

3.2.7 Confirm that each waste container contains *transuranic* (TRU; see def.) radioactive waste.

3.2.7.1 Review the data to confirm that activities and masses (including their associated measurement uncertainties expressed in terms of one standard deviation) of ^{241}Am, ^{238}Pu, ^{239}Pu, ^{240}Pu, ^{242}Pu, ^{233}U, ^{234}U, ^{238}U, ^{90}Sr, and ^{137}Cs are established on a container basis.

3.2.7.2 Confirm each container contains at least one TRU isotope (^{241}Am, ^{238}Pu, ^{239}Pu, ^{240}Pu, ^{242}Pu, or ^{237}Np) whose activity exceeds the *minimum detectable activity* (MDA; see def.) of the *radioassay* (see def.) system.

3.2.7.2.1 Ensure that any container that does not include at least one TRU isotope greater than the MDA is appropriately reported as < lower limit of detection (LLD), and removed from consideration for DQO Data Reconciliation.

NOTE 1: *Pucks loaded into 100-gal product drums or other containers loaded into a SWB will not require an individual assay event if the product drum or SWB itself is assayed utilizing an approved method.*

NOTE 2: *Super High Efficiency Neutron Counter (Super-HENC) will be required when a 100-gal product drum shows a status of MIXED in the LLD status field on the Supercompactor loadout screen in WTS.*

3.2.7.2.2 For a 100-gallon product drum or SWB utilizing summed assay data, confirm each puck drum or inner container has at least one TRU isotope greater than the MDA.

3.2.7.3 For each 100-gallon product drum or SWB, confirm the TRU alpha activity concentration for the radioisotopic data is greater than 100 nCi/g.

3.2.8 For each 100-gal product drum or SWB, review the summation data associated with the RTR, VE or ASY characterization of the inner containers to ensure that the inner containers have been integrated into the summary.

3.2.8.1 Review the data associated with the individual containers to confirm that all appropriate toxicity characteristic hazardous waste numbers (HWNs) are in place.

3.2.9 Confirm that the waste stream has been classified as hazardous or nonhazardous at the 90% confidence level.

NOTE: *Several checks are in place throughout the process to ensure data meet all of the* quality assurance objectives *(QAOs; see def.). Therefore, the only check required by the SPM/AKE during reconciliation is to confirm that the appropriate data were collected and validated with no outstanding issues.*

3.2.10 SPM/AKE: Confirm that the overall completeness, comparability, and representativeness QAOs have been met for each of the analytical testing procedures as specified in MP-TRUW-8.2, Section C3-2 through C3-3.

3.2.10.1 Review container data to confirm that all required characterization and validation are complete with no open NCRs.

3.2.11 Remove containers with open issues as a candidate for DQO data reconciliation and evaluate, as appropriate, for any nonconforming conditions.

3.2.11.1 If it is determined that a nonconforming condition exists, then initiate an NCR in accordance with MP-Q&SI-5.4.

3.2.12 SPM: Complete, sign, and date Form-1598, in accordance with MP-TRUW-8.14.

NOTE 1: *An independent secondary verification of all NCRs and BDR status is only required for manual reconciliation lots. Reconciliation lots completed utilizing the OSM in WTS do not require a secondary verification as the software performs this action.*

NOTE 2: *Any reports generated manually in conjunction with an OSM reconciliation lot will require a secondary verification to ensure the data presented is complete and accurate.*

3.2.13 2nd SPM/AKE: Perform an independent secondary verification for the containers included in a manual reconciliation lot and ensure that any identified issues are resolved prior to completion of the lot.

3.2.13.1 Perform reviews on all data by comparing the hardcopy Characterization Information Summary (CIS) with the QA records in WTS or EDMS, as applicable, to ensure the latest valid data are reviewed as identified in Table 1.

3.2.13.2 Confirm that there are no NCRs open for any of the containers, or associated source containers, included in the lot by independently accessing TrackWise or by use of the QA Container NCR Quick Search.

3.2.13.3 Confirm for each container in the lot that the analysis status is "Pass" and the associated batch data reports have completed SPM validation by accessing the official QA records in WTS or EDMS as applicable.

3.2.13.4 Confirm that the data presented in Form-1598 is complete and accurate by accessing the official QA records in WTS or EDMS as applicable.

3.2.13.5 Sign and date Form-1598 once verification is complete and no outstanding issues are identified.

3.2.14 SPM: When confirmation that DQOs have been met for each container in the reconciliation, complete Form-1597 and/or the DQO Checklist in WTS.

NOTE: *Signing Form-1597 and/or the DQO Checklist finalizes a lot and demonstrates that characterization information is consistent with the established WSPF (Form-1195) or can be used to support a new WSPF.*

3.2.14.1 Sign and date Form-1597 and/or e-sign the DQO Checklist in WTS.

3.2.15 SPM/AKE: Notify the TRU Waste Certification organization that data reconciliation is complete.

3.3 Electronically Define the Waste Stream in WTS by Acceptable Knowledge

3.3.1 SPM/AKE: Use the WTS to manage the data and define the waste stream in WTS.

3.3.1.1 Access the Waste Stream Summary Screen (see Exhibit 1) and confirm that IDCs, generators, container types, and closure date ranges are consistent with expectations for the waste stream.

3.3.1.1.1 If there is no information for the waste stream or if the information is inconsistent with the expectations for the waste stream, then review AK for the specific waste and determine correct parameter(s).

3.3.1.1.2 Complete and submit a System Data Change Request (SDCR) to update appropriate WTS look-up tables to reflect correct information.

3.3.1.2 Access the Waste Stream Miscellaneous Characterization Screen (see Exhibit 2) to confirm that default parameters associated with each of the IDCs is appropriate.

3.3.1.2.1 If any of the default values associated with the Waste Stream Miscellaneous Characterization Screen are incorrect, then complete and submit an SDCR to change the WTS IDC look-up table or waste profile look-up table to reflect correct information.

3.3.1.3 Access the Environmental Protection Agency (EPA) Code Assignment Screen (see Exhibit 3) to confirm EPA codes associated with each IDC are consistent with AK assignment.

3.3.1.3.1 If default EPA codes are incomplete, then add the necessary codes, based on AK for the waste stream, using the “Add EPA Code” button.

3.3.1.3.2 Assign appropriate EPA codes based on AK for the waste stream.

3.3.1.3.3 If the WIPP approval date is incorrect, then enter the correct date.

3.3.1.4 After confirming that the miscellaneous characterization information and EPA codes for the waste stream and the WIPP Approval Date are correct, sign the EPA Code Assignment Screen.

3.3.1.5 Access the TRUCON Code Assignment Screen (see Exhibit 4) to confirm TRUCON codes associated with each IDC are consistent with AK assignment.

3.3.1.6 If default TRUCON codes are incorrect, then add or delete the necessary codes based on AK for the waste stream.

3.3.1.7 After confirming that the TRUCON codes for the IDCs in the waste stream are correct, sign the TRUCON Code Assignment Screen.

3.4 Perform Container Miscellaneous Characterization

NOTE 1: *The procedure to modify miscellaneous characterization data for a container is presented in this section. At times, containers may be run through characterization before the waste stream is fully defined in WTS (e.g., all pertinent AK information not yet entered into WTS lookup tables) or parameters may change based on initial data collection. When these events occur, it will be necessary to update the Container Miscellaneous Characterization Screens (see Exhibit 5) that have incorrect or missing miscellaneous characterization data.*

NOTE 2: *Characterization can be performed only after the AK report is complete. Newly generated wastes will be documented at the time of generation.*

3.4.1 SPM/AKE: Access the Container Miscellaneous Characterization Screen (see Exhibit 5) for the drum that needs to be updated.

3.4.2 Update the Baseline Inventory Report Identification (BIR ID), Mixed Waste Inventory Report Identification (MWIR ID), Process Knowledge Flag (e.g., a WTS "flag" indicating potential flammability issue based on process knowledge), WMC, EPA Codes (HWNs), polychlorinated biphenyl (PCB) data, and beryllium data, as necessary, on the Container Miscellaneous Characterization Screen (see Exhibit 5).

3.5 Perform DQO Reconciliation Rework (Manual and/or Electronic)

NOTE: *At times, one or more containers within a reconciliation lot may require rework or additional characterization after the lot has been finalized and the containers have been released to Waste Certification. When a container is identified that requires rework or additional characterization, the associated data reconciliation lot must be evaluated to determine if the lot itself must be revised.*

3.5.1 SPM: Evaluate any rework performed after data reconciliation has been completed and finalized to determine if one or more DQOs may be affected.

3.5.1.1 Review the DQO-related questions on Form-1597 or the DQO Checklist in WTS, while performing the evaluation.

3.5.1.2 If it is determined that the rework affects how a DQO-related question listed on Form-1597 or the DQO Checklist in WTS is answered, then revise the data reconciliation lot to either remove the affected container(s) or to correct the data for the affected container.

NOTE: *If an undocumented nonconforming condition (DQO, QAO, prohibited item, WMC, IDC, CAQ, etc.) is identified during reconciliation, an NCR will be required.*

3.5.1.3 Ensure an NCR has been initiated, as appropriate, or initiate an NCR, if applicable.

NOTE: *When a DQO Data Reconciliation Lot requires revision to update data or to remove one or more containers, the original reconciliation lot will remain valid for all containers not affected by the change. Written justification for the revision should indicate the validity of the original lot.*

3.5.1.3.1 If a container is to be removed from or information is to be updated in a reconciliation lot, revise as required by Form-1597 and Form-1598 and/or invalidate the container from the lot in WTS.

3.5.1.3.2 Provide clear justification for the revision (i.e., results of the DQO evaluation) in the Form-1598 narrative and/or the comments tab in WTS, as appropriate.

3.5.1.4 2nd SPM/AKE: Review all revised information per Step 3.2.12 to ensure the accuracy of the modified information.

3.5.1.4.1 If information is removed from a CIS, perform a secondary verification to ensure the appropriate information has been removed.

3.5.1.5 Document new reconciliation results on the WTS DQO Reconciliation Screen, and prepare a revised Form-1597 and Form-1598.

NOTE: *If a reconciliation lot is complete using the OSM in WTS and a container within that lot requires additional characterization or a 100-gal container fails the container integrity inspection, the container must be removed from the reconciliation lot in order to facilitate data changes in WTS. The data for that container will remain locked until it is invalidated from the reconciliation lot. In addition, if the lot was also completed manually, Form-1597 and Form-1598 must also be revised to remove the container from the lot.*

3.5.2 SPM: If rework is required on individual containers on a finalized reconciliation lot (DQO reconciliation performed), and recon has been completed, remove the signature from the individual container by accessing the DQO Reconciliation Screen for the lot.

3.5.2.1 Coordinate with the Waste Certification Official (WCO) if the container has been certified or is in use by the WCO.

3.5.2.2 Provide justification for signature removal.

3.5.2.3 Document removal of the container from the lot using the WTS DQO reconciliation checklist and revise Forms-1597 and Form-1598, as appropriate.

3.5.2.4 Rework container as necessary.

3.5.2.5 Reconcile reworked container with another lot.

4.0 DEFINITIONS

Acceptable knowledge. Consists of information about waste based on the material and processes that generate the waste. AK includes information relating to the physical form of the waste, the base materials composing the waste, the nature of the radioactivity present, and the historical processes generating the waste. AK includes any documentation that describes or verifies site history, mission, and operations, in addition to waste stream-specific information used to define the generating process, matrix, and contaminants (radiological and chemical).

Data quality objectives. Qualitative and quantitative statements derived from the outputs of the first six steps of the DQO Process. DQOs clarify the study objective, define the most appropriate type of data to collect, determine the most appropriate conditions from which to collect the data, and specify tolerable limits on decision errors be used as the basis for establishing the quantity and quality of data needed to support compliance decisions. DQOs are used to develop a scientific and resource-effective data collection design.

Lot. A group of containers exclusively going through reconciliation. This container group going through reconciliation will be on one dedicated CIS.

Minimum detectable activity. The radioactive concentration which, if present, yields a measured value greater than the critical level with 95% probability, where the critical level is defined as that value which measurements of the background exceed 5%.

Quality assurance objectives. The characteristics of data that satisfy a given purpose or objective. The characteristics are accuracy, precision, completeness, comparability, and representativeness.

Radioassay. Methods used to identify and quantify radionuclides in TRU waste. Radioassay includes non-destructive assay (NDA) and radiochemistry (RC).

Real-time radiography. A radiographic method that allows simultaneous remote imaging for the viewing of waste package contents.

Reconciliation. The process used to confirm that sufficient data has been collected to characterize a waste stream or waste stream lot.

Transuranic. Wastes contaminated with alpha-emitting radionuclides of atomic number greater than 92 (e.g., the radioactive isotopes of plutonium), with half-lives greater than 20 years, and are present in concentrations greater than 100 nanocuries per gram of waste.

Visual examination. Constitutes opening a container and performing a physical examination of the contents to verify physical form and the presence/absence of prohibited items.

Waste matrix code. The term "waste matrix code" is used throughout the WIPP WAP and pertains to collection of descriptive titles, definitions, and associated numerical codes used to classify mixed waste at Department of Energy (DOE) facilities. Waste Matrix Codes (synonymous with matrix parameter categories) as defined in DOE/LLW-217, DOE Waste Treatability Group Guidance.

Waste stream. Waste materials that have common physical form, that contain similar hazardous constituents, and that are generated from a single process or activity.

5.0 REFERENCES

(1) 40 CFR 261 Part C, Characteristics of Hazardous Waste

(2) 40 CFR 268.2, Land Disposal Restrictions, Definitions

(3) AMWTP HWMA/RCRA Permit

(4) DOE/WIPP-09-3427, Waste Data System User's Manual

(5) MP-DOCS-18.2, Records Management

(6) MP-Q&SI-5.4, Identification of Nonconforming Conditions

(7) MP-TRUW-8.1, Certification Plan for INL Transuranic Waste

(8) MP-TRUW-8.2, Quality Assurance Project Plan

(9) MP-TRUW-8.13, Collection, Review, and Management of Acceptable Knowledge Documentation

(10) MP-TRUW-8.14, Preparation of Waste Stream Profile Forms

(11) RPT-TRUW-30, Acceptable Knowledge Summary for Supercompacted Debris Waste (BN510)

(12) RPT-TRUW-83, Acceptable Knowledge Summary for Supercompacted Debris Waste (BN510.1)

6.0 RECORDS

Records generated by this procedure are classified in accordance with the table below and dispositioned in accordance with MP-DOCS-18.2, Records Management.

Record Description	Classification
MP-TRUW-8.11, Case File	Nonpermanent WIPP Records/ENV1-J-1/Destroy 10 years after being superseded
Form-1195, Waste Stream Profile Form	Lifetime WIPP Records/ENV1-J-1/ Submit RMC for long term storage and transfer
Form-1597, Reconciliation with Data Quality Objectives	Lifetime WIPP Records/ENV1-J-1/ Submit RMC for long term storage and transfer
Form-1598, Characterization Information Summary Report	Lifetime WIPP Records/ENV1-J-1/ Submit RMC for long term storage and transfer

7.0 EXHIBITS

Exhibit 1, Waste Stream Summary Screen (Example)

Exhibit 2, Waste Stream Miscellaneous Characterization Screen (Example)

Exhibit 3, EPA Code Assignment Screen (Example)

Exhibit 4, Lot Planning Screen (Example)

Exhibit 5, Container Miscellaneous Characterization Screen (Example)

8.0 APPENDICES

Appendix A - Guidelines for Determination of Manual or EV&V QA Records

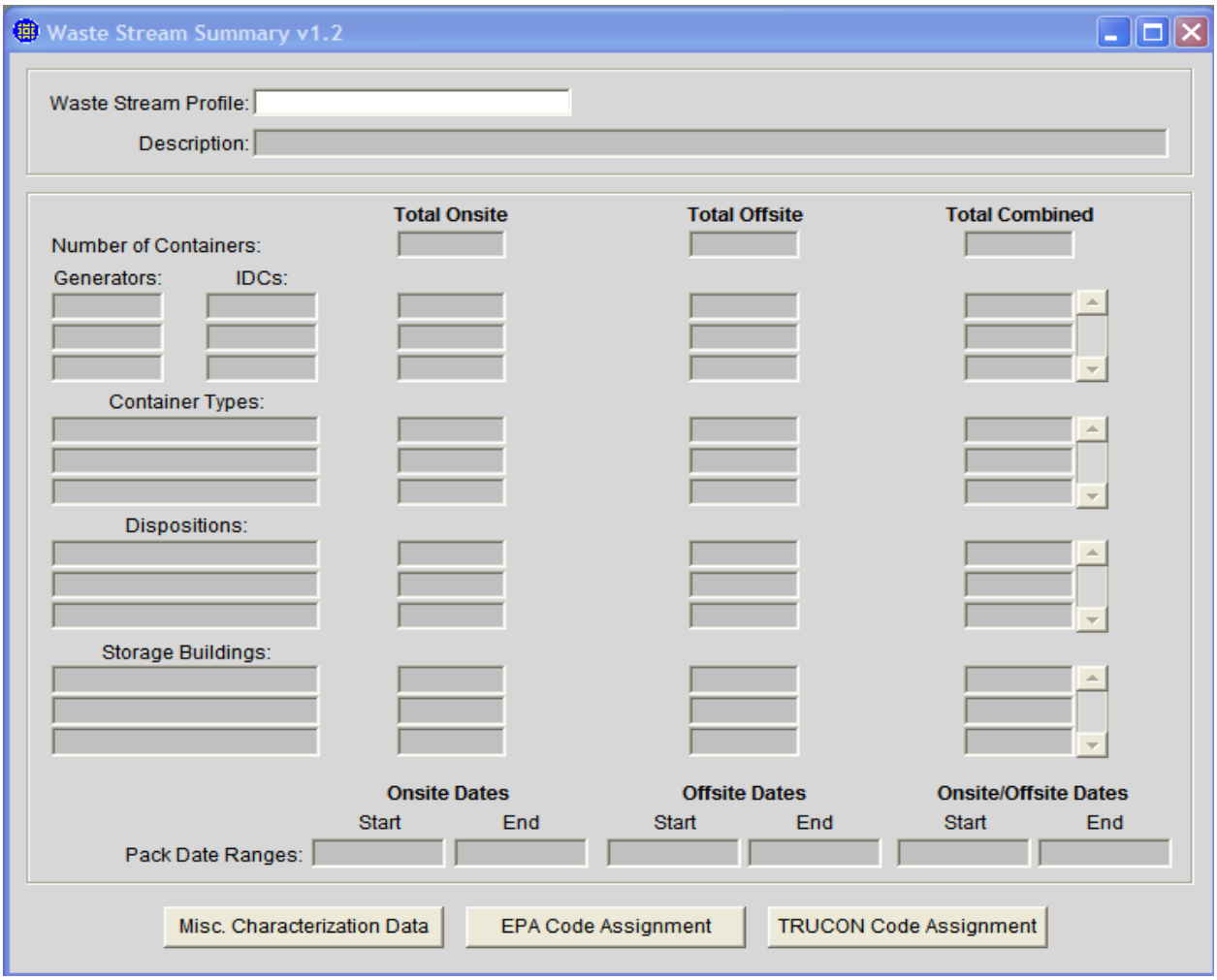

Exhibit 1. Waste Stream Summary Screen (Example).

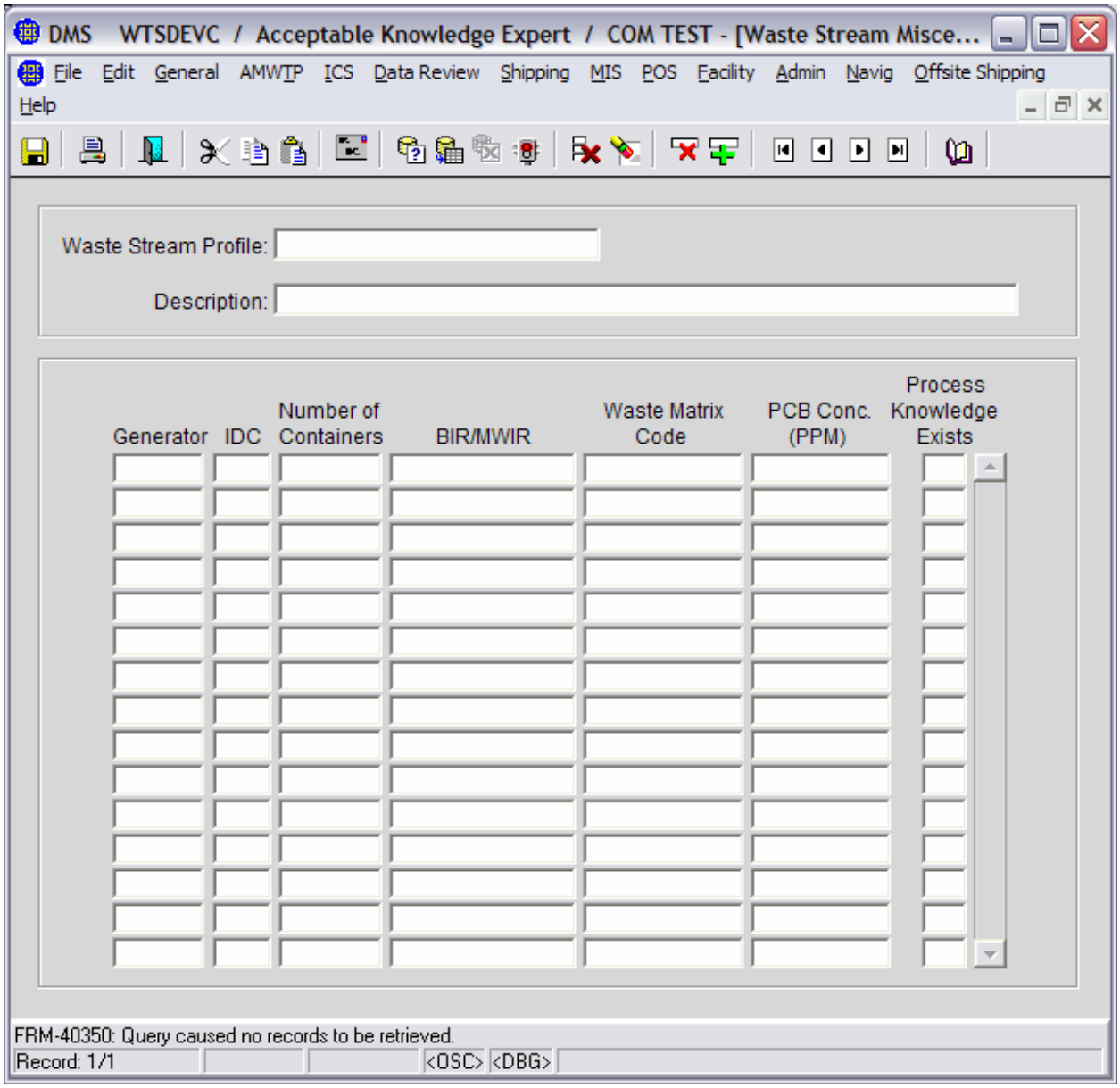

Exhibit 2. Waste Stream Miscellaneous Characterization Screen (Example).

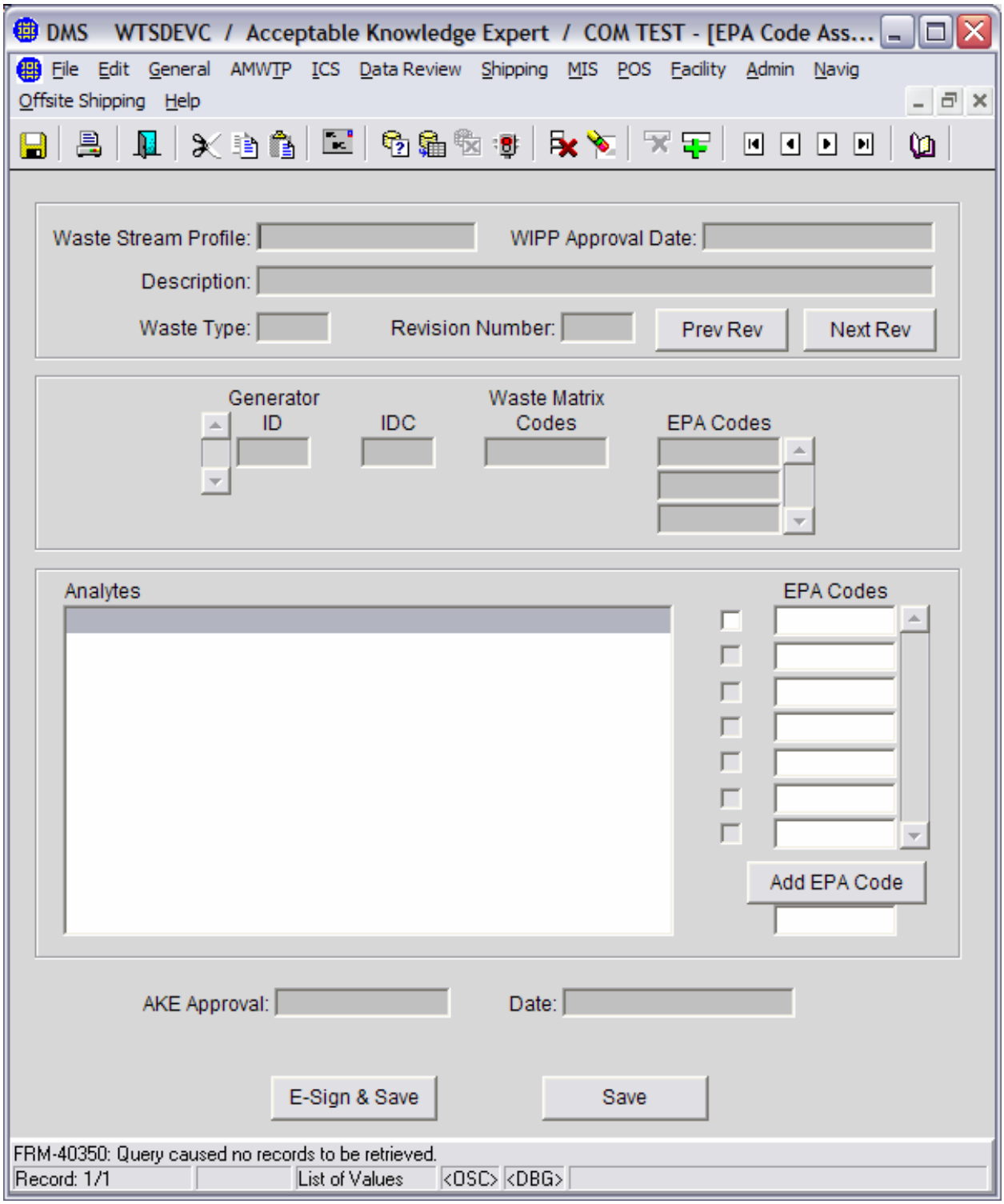

Exhibit 3. EPA Code Assignment Screen (Example).

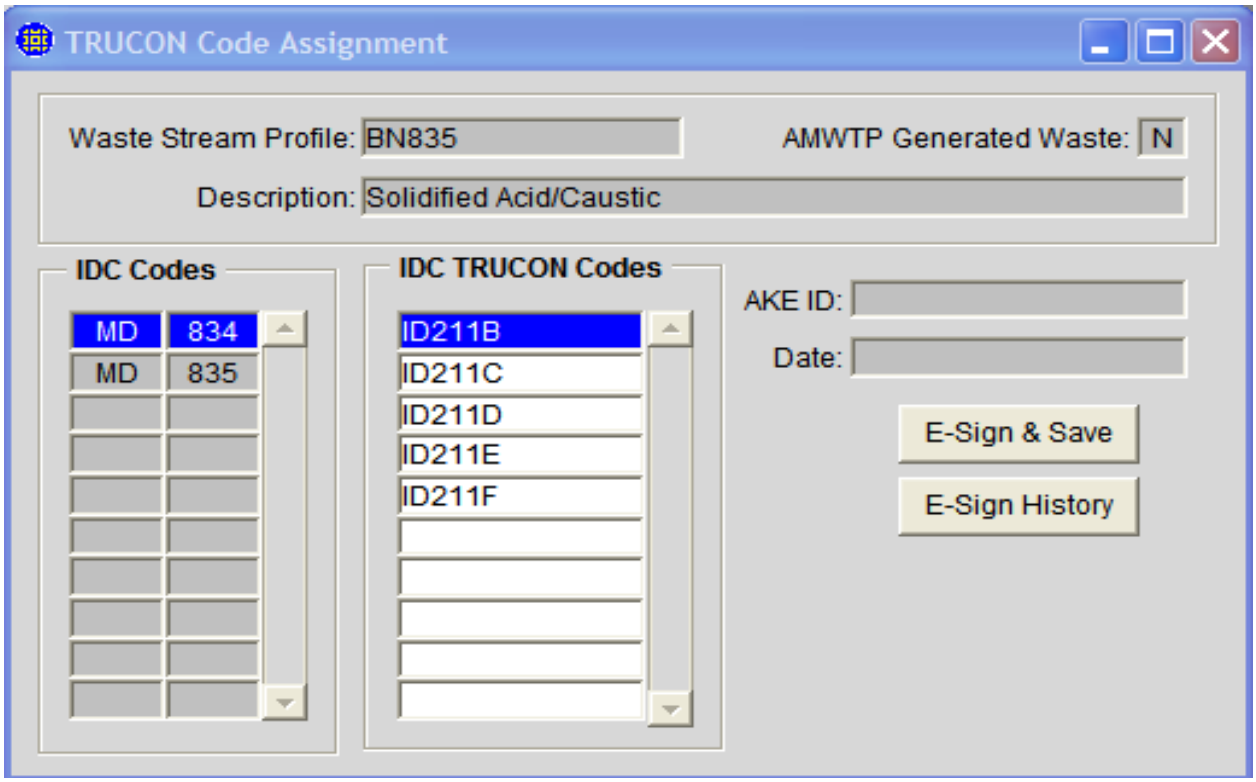

Exhibit 4. Lot Planning Screen (Example).

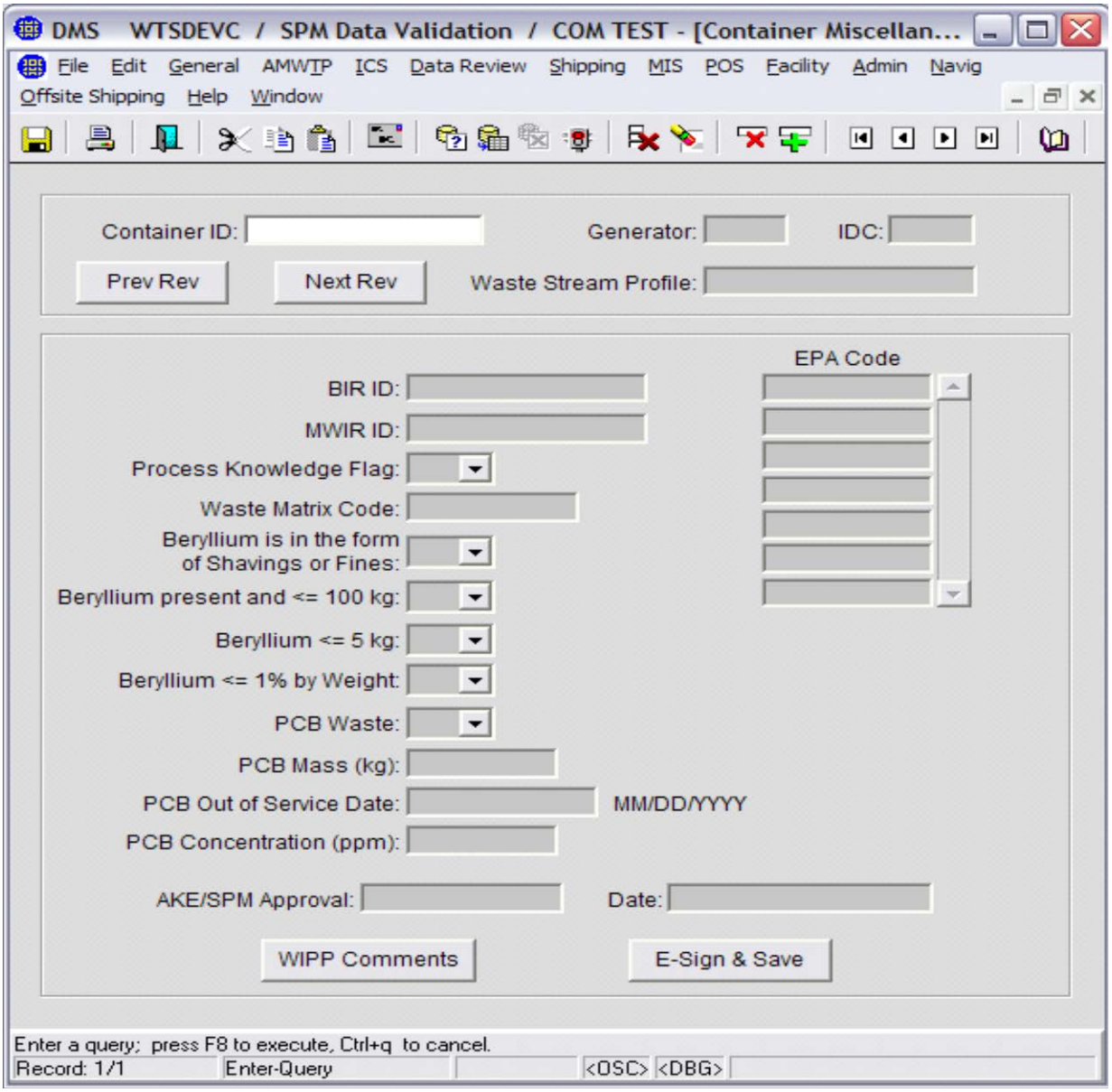

Exhibit 5. Container Miscellaneous Characterization Screen (Example).

Appendix A – Guidelines for Determination of Manual or EV&V QA Records

For any data validated at the Independent Technical Review (ITR) level prior to May 4, 2006, the manual Batch Data Report (BDR) is the QA record, except as noted below:

- Assay Expert Technical Review (ETR) performed on a container on or after May 4, 2006, will result in a WTS QA record regardless of the original status of the BDR as the ETR data for that container is validated in WTS only.

For most data validated at the ITR level on or after May 4, 2006, WTS is the QA record, except as noted below:

- RTR/VE Updates (RVU) that were not validated electronically in WTS with the BDR were required to be validated manually; the manual BDR is the QA record.
  - Manual RVUs will show an Approval Level at "ITR" and an Approve Status of "W" in WTS, and the manual BDR is the QA record.
  - EV&V RVUs will show an Approval Level at "SPM" and an Approval Status of "AP" in WTS, and WTS is the QA record.
  - For manual ASY batch results where a more recent valid weight event exits, e.g., RVU, verify gross weight, net weight, and TRU Alpha Activity Concentration (TAAC) in WTS.
- Any data generated by an offsite laboratory or contractor (such as Super-HENC) will be manually validated, and the manual BDR is the QA record.

Waste Receipt and Shipping Inspection

Advanced Mixed Waste Treatment Project

Approval:

(Signature on file. See DCR-13595.)

08/21/14
Date

REVISION LOG

Revision Number	Date Approved	Pages Affected	Description of Revision
0	08/01/02	All	Initial issue. DCR-1302
1	12/10/02	4, 7-10, C1	DCR-1784. Changed revision number from 0 to 1. Added clarification.
2	02/18/03	All	DCR-2051. Changed document to include WIPP adequacy review comments.
3	02/27/03	Various	DCR-2076. Changed document to reflect changes requested at WIPP Transportation audit.
4	03/20/03	All	DCR-2099. Added "Container Certification Statements" to Shipment Records Checklist.
5	3/28/03	All	DCR-2163. Changed effective date from "When DOE Approves Retrieval Operations" to March 28, 2003
6	05/01/03	Various	DCR-2172. Deleted Step 4.1.10 and reworded appropriate text in document. Revised Forms 1203 and 1204, Included CBFO comments.
7	07/08/03	6	DCR 2194. Changed Performer from SO to TCO. Minor editorial changes
8	03/30/04	Various	DCR-2845. Added use of new Form-1553. Revised Steps 4.1, 4.2.8, 4.3.18, and added additional forms to Section 5.0.
9	04/21/04	Various	DCR-2938. Revised to change record storage requirements for TCO.
10	12/09/04	Various	DCR-3349. Incorporate CH-TRAMPAC and CH WAC. Minor editorial changes Revision bars throughout document are a result of standard reformatting to MP-DOCS-18.4. Incorporate CBFO DRR 04-2264 comments, see DCR-3349-1 and DCR-3349-2.

AMWTP MANAGEMENT PROCEDURE		
MP-TRUW-8.12, Rev. 25	Issued: 08/21/14	Effective: 08/22/14

Waste Receipt and Shipping Inspection

Revision Number	Date Approved	Pages Affected	Description of Revision
11	06/16/05	Various	DCR-4173. Correct responsibilities for TRUPACT-II/ HALFpact package receipt and shipping a loaded TRUPACT-II/HALFpact and correct typographical errors in Section 4.3.3. Update document to incorporate contract transition logo changes, etc.
12	9/14/05	Pages 3 – 5	DCR-4537. Add "or designated alternate" to all steps in Section 4.1. Processed as a minor change.
13	10/24/05	All	DCR-4616. Revised page 6, steps 3.3.3 and 3.3.4 to remove the SQAO review of operations loading documents. Removed some SPM reviews. Also revised Form-1204. Formatted to comply with MP-DOCS-18.3, Rev. 2. Periodic review.
14	08/21/06	4, 6, and 10	DCR-5255. Minor change to correct references to steps in Form-1204.
15	1/08/07	Various	DCR-5275. Rewrite to allow for waste receipt from LANL and other off-site waste generators—other edits for consistency and clarification.
16	1/24/07	Pgs. 11, 12	DCR-5676. Minor change to update procedure title references in accordance with the WIPP RH 311 permit modification, and for accuracy.
17	07/24/07	All	DCR-6001. Incorporate changes in procedure to introduce new Form-1821, Shipping Checklist, to ensure DOT requirements are met.
18	03/28/08	All	DCR-6573. Revise for CCP transition effort. Remove notifications that are no longer needed. Update roles and responsibilities. Update Records section to meet MP-DOCS-18.2 requirements.
19	12/02/08	Various	DCR-7593. Changed Transportation Certification Assistant to the Shipping Assistant, changed weight limit from 78,500 to 77,500, added the Intersite Shipping Module, and edited per MP-DOCS-18.3.

Revision Number	Date Approved	Pages Affected	Description of Revision
20	07/09/09	Various	DCR-8447. Change Step 3.1.11 to read: SC or Designated alternate: If a tamper indicating seal appears to be damaged, then notify the shift supervisor and transportation certification official. Updated the periodic review date.
21	09/30/09	Various	DCR-8642. Incorporate changes to resolve CAR 44465, including revising step 3.1.11 for the Transportation Mgr. to be notified, add steps after 3.3.5 to ensure review of PCBs is performed, including ensuring a waste container data report is provided.
22	03/30/10	Various	DCR-8937. Incorporated DOCS-BLUESHEET-06. Replaced "payload number" with "TRUPACT/ HalfPACT numbers" in Step 3.2.1 and "package number" with "payload number" in Step 3.3.1. Deleted Step 3.3.17.1. Deleted "If the gross weight is above 77,500, the shipment is weighed" from the note before Step 3.3.23. Made minor editorial corrections per MP-DOCS-18.3.
23	10/10/12	Various	DCR-11723. Applied ITG-BLUESHEET-070. Updated document owner and title.
24	09/03/13	Various	DCR-12651. Added changes required by 49 CFR 397.101 for HRCQ shipments. Incorporated new step required by Idaho State Police and Central Monitoring Room, Carlsbad, NM.
25	08/21/14	Various	DCR-13595. Periodic review. Entire document revised. Changes made due to shipping TRU waste to a commercial facility for storage. Other changes made to meet requirements of NRC Certificate of Compliance, 49 CFR, and 40 CFR 262.

AMWTP MANAGEMENT PROCEDURE		
MP-TRUW-8.12, Rev. 25	Issued: 08/21/14	Effective: 08/22/14
Waste Receipt and Shipping Inspection		

TABLE OF CONTENTS

1.0 PURPOSE/SCOPE 1

2.0 ROLES AND RESPONSIBILITIES 1

3.0 PROCEDURE 2

3.1 Receiving a TRUPACT/HalfPACT Package 2

3.2 Shipping an Empty TRUPACT/HalfPACT 3

3.3 Shipping a Loaded TRUPACT-II/HalfPACT 4

4.0 DEFINITIONS 7

5.0 REFERENCES 8

6.0 RECORDS 10

7.0 EXHIBITS 11

8.0 APPENDICES 11

AMWTP MANAGEMENT PROCEDURE		
MP-TRUW-8.12, Rev. 25	Issued: 08/21/14	Effective: 08/22/14
Waste Receipt and Shipping Inspection		

1.0 PURPOSE/SCOPE

This management procedure assigns responsibility and establishes quality assurance requirements for the receipt, inspection, and shipment for the Transuranic (TRU) Package Transporter (TRUPACT) Model-II and -III and HalfPACT shipping packages.

The document provides instructions for routine shipping and receiving inspections and complies with the minimum requirements as specified by the Department of Transportation, Safety Analysis Reports for Packaging, Nuclear Regulatory Commission (NRC) Certificates of Compliance (C of C) (9218, 9279, and 9305), Waste Isolation Pilot Plant (WIPP) Waste Acceptance Criteria (DOE/WIPP-02-3122), the Central Characterization Project (CCP) Contact Handled (CH)-TRAMPAC (CCP-PO-003, CCP Transuranic Authorized Methods for Payload Control [CCP CH-TRAMPAC]), and the CH-Packaging Operations Manual (DOE/WIPP-02-3184). The CH-Packaging Operations Manual is used in conjunction with CH-Packaging Program Guidance (DOE/WIPP-02-3183).

2.0 ROLES AND RESPONSIBILITIES

Performer	Responsibilities
Shipping Coordinator (SC) or designated alternate	• Performs the steps in this procedure unless otherwise stated • Ensures manifesting, labeling, and placarding are in compliance with 49 Code of Federal Regulations (CFR), Transportation.
CCP Transportation Certification Official (TCO)	• Provides documentation to the SC that is generated by the CCP program, using the Waste Data System (WDS)/WIPP Waste Information System (WWIS) and build sheet if appropriate • Ensures compliance with the CCP program requirements • Ensures manifesting, labeling, and placarding are correct per CCP procedures in compliance with 49 CFR.

3.0 PROCEDURE

NOTE 1: *Steps in this procedure may be performed in parallel and out of sequence.*

NOTE 2: *Performers should ensure that the appropriate box is checked for verifications performed. N/A may be used if the step does not apply to the shipment.*

3.1 Receiving a TRUPACT/HalfPACT Package

NOTE: *TRUPACTs/HalfPACTs loaded with offsite TRU waste will follow requirements of MP-TRUW-8.41, Offsite Waste Acceptance.*

3.1.1 Initiate Form-1203, Package Receipt Checklist, by filling out the tractor number, trailer number, incoming shipment number, and TRUPACT/HalfPACT numbers.

3.1.1.1 Identify the loaded status of the containers and any discrepancies identified.

3.1.2 Verify that the drivers are on the certified drivers list.

3.1.3 Verify that shipping documents have been properly prepared and have been reviewed and signed/dated to acknowledge receipt.

3.1.3.1 If shipping document was a manifest, remove page identified as “Designated Facility to Generator” and return page to the generator within 25 days.

3.1.4 Attach shipping documents to Form-1203.

3.1.5 Verify that the pre-trip and post-trip inspection reports have been obtained and are attached to Form-1203.

3.1.6 If the TRUPACT/HalfPACTs are loaded, verify that the tamper indicating seals are intact.

3.1.7 If a tamper indicating seal appears to be damaged, notify the Transportation manager.

3.1.8 Inspect TRUPACT/HalfPACTs for damage (except for superficial marks).

3.1.8.1 Check the nameplates to verify that packages are proper for the contents to be shipped.

3.1.9 Check the inspection record on the trailer to verify that the trailer to be loaded/unloaded has a current annual safety inspection.

3.1.10 Ensure trailer wheels are chocked after parking the trailer.

3.1.11 Release TRUPACT/HalfPACTs to be loaded/unloaded.

3.1.12 Attach the shipping paper, pre-trip inspection, and post-trip inspection report to the completed original Form-1203.

3.1.12.1 Retain documentation for final outbound shipment file.

3.1.13 Print and sign the names of the performers involved in completing Form-1203.

3.2 Shipping an Empty TRUPACT/HalfPACT

NOTE 1: *Some steps/verifications on Form-1204, Package Shipping Checklist, are not applicable to shipping an empty TRUPACT-II/HalfPACT and should be indicated (i.e., N/A) as such on the checklist. The appropriate box should be checked for verifications performed.*

NOTE 2: *Steps 1, 4, 6, 9, 14, 15, and 19 of Form-1204 are required to be completed for empty shipments.*

3.2.1 **RECORD** the shipment number, date, TRUPACT/HalfPACT numbers, the weights for each TRUPACT/HalfPACT container, and the loaded status (N).

3.2.1.1 Ensure the Certificate of Compliance nameplate is present on Form-1204, Step 1, as applicable.

3.2.2 Prepare the shipping papers in accordance with 49 CFR 172, Subpart C, Shipping Papers.

3.2.3 Mark, label, and placard the shipment in accordance with 49 CFR 172, Subpart D, Marking; Subpart E, Labeling; and Subpart F, Placarding.

3.2.4 Verify that the drivers are on the certified drivers list.

3.2.5 Complete Form-1437, Radioactive Material Packaging Quality Control Inspection, (or equivalent) in accordance with 49 CFR 173.475, Quality Control Requirements Prior to Each Shipment of Class 7 (Radioactive) Materials.

3.2.6 Ensure the following:

- Radiation and contamination surveys (Form-1129, Radiological Survey Report and Map) (in accordance with 49 CFR 173.441, Radiation Level Limitations and Exclusive Use Provisions) of the TRUPACT/HalfPACT(s) have been completed
- Initial and final radiation and contamination surveys have been documented and copies have been provided to the SC for the final shipment file.

3.2.7 Retain documentation as required on Form-1857, WIPP Shipment Document Control Checklist.

3.2.8 Review Form-1204 and Form-1203 for completeness and ensure all documentation is included in the shipment file.

3.2.9 Print and sign names of performers involved in completing Form-1204.

3.3 Shipping a Loaded TRUPACT-II/HalfPACT

3.3.1 Verify the shipment information, and initiate Form-1204 by completing the following:

- Shipment number
- Date
- TRUPACT/HalfPACT numbers
- Payload number
- Loaded TRUPACT/HalfPACT weight, if loaded
- If Certificate of Compliance nameplate is present.

3.3.2 Verify that the shipment is on the 8-week rolling schedule or a Carlsbad Field Office (CBFO)-approved schedule revision.

3.3.3 Initiate Form-1821, Shipping Checklist, and Form-1857.

3.3.4 Using information provided by the TCO or on the Intersite Shipping Module, prepare the shipping documentation (Bill of Lading or Hazardous Waste Manifest) in accordance with 49 CFR 172, Subpart C, and 40 CFR 262, Appendix, Uniform Hazardous Waste Manifest and Instructions.

NOTE: *Forms for commercial facilities may be unique for each receiving facility.*

3.3.5 Complete NRC Form 540, Uniform Low-Level Radioactive Waste Manifest–Shipping Paper, and NRC Form 541, Uniform Low-Level Radioactive Waste Manifest–Container and Waste Description, with additional information forms, in accordance with 10 CFR 20, Standards for Protection Against Radiation, to meet waste tracking requirements when required by the receiving facility.

3.3.6 Generate the NRC Form 741, Nuclear Materials Transaction Report, and forward to AMWTP Nuclear Accountability for review and signature when required by the receiving facility.

3.3.6.1 Include a copy with the shipping documents when required.

3.3.7 Ensure that a completed and signed Special Nuclear Material Exemption Certification form for the receiving facility is included with the shipping documents when required.

3.3.8 Ensure that required prior shipment notifications have been made and approvals granted, as required for receiving facilities.

3.3.8.1 Review for the presence of polychlorinated biphenyls (PCBs).

3.3.8.1.1 For direct payloads and overpacks, ensure the TCO provides the SC a payload build sheet.

NOTE: *The Land Disposal Restriction (LDR) may accompany each shipment if required by the receiving facility.*

3.3.9 If this is the first shipment of a new or revised waste stream, obtain LDR notification from the TCO and include it with the shipping papers.

3.3.10 Provide Form-1821 and associated documentation to an independent SC for review.

3.3.11 If manifest changes are made that require new Environmental Protection Agency (EPA) manifest number (EPA Form 8700-22, Uniform Hazardous Waste Manifest), then initiate a new Form-1821.

3.3.11.1 Attach Form-1821 associated with the unused manifest number to the new Form-1821 with the new manifest number.

3.3.12 Mark, label, and placard the shipment in accordance with 49 CFR 172, Subpart D, Subpart E, and Subpart F.

3.3.13 If shipment contains PCBs, mark in accordance with 40 CFR 761.40, Marking Requirements.

3.3.14 Verify that a Commercial Vehicle Safety Alliance inspection has been completed.

3.3.15 Verify that the WIPP transport drivers have completed and signed a copy of the Carrier's Highway Route Controlled Quantity Shipment Routing Plan, if required for the shipment.

3.3.16 Verify that the drivers are on the certified drivers list.

3.3.17 Submit a copy of the Bill of Lading or Hazardous Waste Manifest to the following as required:

- WIPP Shipping Coordinator
- Idaho National Laboratory Warning Communication Center (WCC)
- The receiving facility (if shipped to sites other than WIPP).

3.3.18 Verify that the maximum gross shipping weight for the loaded packages, including the tractor and trailer does not exceed 80,000 lb.

3.3.19 Obtain a completed Form-1437 (or equivalent) from the TCO in accordance with 49 CFR 173.475.

3.3.20 Ensure the following:

A. The initial and final radiation/contamination checks have been completed

(49 CFR 173.441)

B. The radiation and contamination surveys have been documented and copies are included in the final shipment file.

NOTE: *If designated as a controlled shipment (10-day shipping period), TCO will provide SC with appropriate documentation to accompany the shipment.*

3.3.21 TCO: If designated as a controlled shipment (10-day shipping period), provide the SC with appropriate documentation to accompany the shipment.

3.3.21.1 Retain copy of documentation for shipment file.

3.3.22 Contact the WIPP Central Monitoring Room by phone and obtain concurrence for the shipment departure.

3.3.22.1 Include the shipment number, tractor number, and TRUPACT/HalfPACT numbers of the shipment in the communication.

3.3.23 Notify WCC by phone that the shipment is departing.

3.3.24 Notify Idaho State Police by telephone with all shipment and tractor numbers for the day, before departure of the first shipment.

3.3.25 Retain documentation as required on Form-1857.

3.3.26 Print/sign name of all performers involved in completing Form-1204.

3.3.27 Review Forms-1203, -1204, and -1857 for completeness, and ensure all documentation is included in shipment file.

4.0 DEFINITIONS

None

5.0 REFERENCES

(1) 10 CFR 20, Standards for Protection Against Radiation

(2) 10 CFR 30, Rules of General Applicability to Domestic Licensing of Byproduct Material

(3) 10 CFR 40, Domestic Licensing of Source Material

(4) 10 CFR 50, Domestic Licensing of Production and Utilization Facilities

(5) 10 CFR 70, Domestic Licensing of Special Nuclear Material

(6) 10 CFR 72, Licensing Requirements for the Independent Storage of Spent Nuclear Fuel, High-Level Radioactive Waste, and Reactor-Related Greater than Class C Waste

(7) 10 CFR 74, Material Control and Accounting of Special Nuclear Material

(8) 10 CFR 75, Safeguards on Nuclear Material—Implementation of US/IAEA Agreement

(9) 10 CFR 150, Exemptions and Continued Regulatory Authority in Agreement States and in Offshore Waters Under Section 274

(10) 40 CFR 262, Appendix, Uniform Hazardous Waste Manifest and Instructions

(11) 40 CFR 761.40, Marking Requirements

(12) 49 CFR, Transportation

(13) 49 CFR 172, Subpart C, Shipping Papers

(14) 49 CFR 172, Subpart D, Marking

(15) 49 CFR 172, Subpart E, Labeling

(16) 49 CFR 172, Subpart F, Placarding

(17) 49 CFR 173, Shippers-General Requirements for Shipments and Packaging

(18) 49 CFR 173.441, Radiation Level Limitations and Exclusive Use Provisions

(19) 49 CFR 173.475, Quality Control Requirements Prior to Each Shipment of Class 7 (Radioactive) Materials

(20) CCP-PO-003, CCP Transuranic Authorized Methods for Payload Control (CCP CH-TRAMPAC)

(21) MP-DOCS-18.2, Records Management

(22) MP-TRUW-8.41, Offsite Waste Acceptance

(23) U.S Department of Energy, "CH Packaging Operations Manual," DOE/WIPP-02-3184, U.S. Department of Energy, Carlsbad Field Office, Carlsbad, New Mexico*

(24) U.S. Department of Energy, "CH Packaging Program Guidance," DOE/WIPP-02-3183, U.S. Department of Energy, Carlsbad Field Office, Carlsbad, New Mexico*

(25) U.S. Department of Energy, "Contact-Handled Transuranic Waste Authorized Methods for Payload Control (CH-TRAMPAC)," U.S. Department of Energy, Carlsbad Field Office, Carlsbad, New Mexico*

(26) U.S. Department of Energy, "Safety Analysis Report for HalfPACT Shipping Package, NRC-Docket-71-9279 (current revision), U.S. Department of Energy, Carlsbad Field Office, Carlsbad, New Mexico*

(27) U.S. Department of Energy, "Safety Analysis Report for the TRUPACT-II Shipping Package," NRC-Docket-71-9218 (current revision), U.S. Department of Energy, Carlsbad Field Office, Carlsbad, New Mexico*

(28) U.S. Department of Energy, "Transuranic Waste Acceptance Criteria for the Waste Isolation Pilot Plant", DOE/WIPP-02-3122, U.S. Department of Energy, Carlsbad Field Office, Carlsbad, New Mexico*

(29) U.S. Department of Energy, "TRUPACT-III Program Guidance, DOE/WIPP-11-3456* (current revision)

(30) U.S. Nuclear Regulatory Commission, "Certificate of Compliance," (C of C) NRC Docket-71-9218, TRUPACT-II*

(31) U.S. Nuclear Regulatory Commission, "HalfPACT Certificate of Compliance," (C of C) NRC-Docket-71-9279, TRUPACT-II*

(32) U.S. Nuclear Regulatory Commission, "Certificate of Compliance," (C of C) NRC-Docket-71-9305, TRUPACT-III*

*All WIPP documents are found at Website http://www.wipp.energy.gov/library/caolib.htm

6.0 RECORDS

Records generated by this procedure are classified in accordance with the table below and dispositioned in accordance with MP-DOCS-18.2, Records Management.

Record Description	Classification
MP-TRUW-8.12, Case file	Nonpermanent WIPP/ENV1-J-1/Destroy 10 years after submittal
TRUPACT-II Shipment Data Package • Form-1203, Package Receipt Checklist • Form-1204, Package Shipping Checklist • Form-1437, Radioactive Material Packaging Quality Control Inspection • EPA Form-8700-22, Uniform Hazardous Waste Manifest • Bill of Lading • DOE/NRC and additional notes o Form 540, Uniform Low-Level Radioactive Waste Manifest–Shipping Paper o Form-541, Uniform Low-Level Radioactive Waste Manifest–Container and Waste Description o Form-541A, Uniform Low-Level Radioactive Waste Manifest–Container and Waste Description (continuation) • NRC Form 741, Nuclear Material Transaction Report • Special Nuclear Material Exemption Certification	Facility Operating Record/ENV2-a-1-a/Destroy 5 years after life of facility
Form-1129, Radiological Survey Report and Map	Facility Operating Record/ENV2-a-1-a/Destroy 5 years after life of facility
Form-1821, Shipping Checklist	Checklist tool only, not retained as a record.
Form-1857, WIPP Shipment Document Control Checklist	Nonpermanent WIPP/ENV1-J-1/Destroy 10 years after submittal

7.0 EXHIBITS

None

8.0 APPENDICES

None

Collection, Review, and Management of Acceptable Knowledge Documentation

Advanced Mixed Waste Treatment Project

Approval:

(*Signature on file. See DCR-12055.*) 08/09/13

Date

AMWTP MANAGEMENT PROCEDURE		
MP-TRUW-8.13, Rev. 25	Issued: 08/13/13	Effective: 08/14/13
Collection, Review, and Management of Acceptable Knowledge Documentation		

REVISION LOG

Revision Number	Date Approved	Pages Affected	Description of Revision
0	07/03/02	All	Initial issue. DCR-2002-1266
1	07/17/02	All	DCR-2002-1310: Changed effective date from "DOE Approves Retrieval Operations Start-up" to 07/17/02. Changed issued date to 07/17/02. Changed Revision from "0" to "1."
2	09/05/02	4, F2 of 2	DCR-1468: Changed revision number from 1 to 2. Added reference to document and clarification to Appendix F.
3	12/09/02	4, F2	DCR-1767: Changed revision number from 2 to 3. Added clarification to Purpose/Scope and Appendix F.
4	5/01/03	All	DCR-2197. Edited procedure in response to CBFO comments.
5	07/01/03	Section 4.12, Appendix H	DCR-2308. Edited procedure in response to Performance Evaluation comment.
6	10/09/03	Pages 24 & 34	DCR 2427. Edited procedure in response to CBFO Audit A-03-05, CAR 03-076.
7	02/10/04	Various Pages	DCR-2692: Edited procedure in response to EPA Inspection report, EPA-INEEL AMWTP-10.03-24
8	02/12/04	Section 4.4.3.4	DCR-2706: Re-word for clarity in response to CBFO
9	07/08/04	Sections 4.2.2 and 4.4.4.1.1	DCR-3084: Add in language to address WIPP WAC and WAP requirements for beryllium.
10	03/03/05	All	DCR-4183. Revised to update to Revision 2 of the CH-WAC. Periodic review.
11	04/27/05	Section 2.2.2.	DCR-4283 Standard editorial practice remove revision number from WAP
12	05/03/05	Section 4.4, 4.4.8.1 and 4.4.8.2	Add subsection 4.4.8 with subsections 4.4.8.1 and 4.4.8.2. Documentation of WIPP-WAC section 3.1.4.1. Incorporation of CBFO comments.

AMWTP MANAGEMENT PROCEDURE		
MP-TRUW-8.13, Rev. 25	Issued: 08/13/13	Effective: 08/14/13

Collection, Review, and Management of Acceptable Knowledge Documentation

Revision Number	Date Approved	Pages Affected	Description of Revision
13	2/6/06	All	DCR-4517. Revise procedure to reflect changes in WAC. Revise procedure (including Appendix D) concerning AK summary report preparation to incorporate CBFO comments on individual reports. Add clarification concerning AKRs and DRs. Revise Appendix H to reflect actual practices. Update to comply with MP-DOCS-18.3. Make format and company name changes as described on DCR-4299.
14	05/22/06	All	DCR-4871. Revised for clarification of intent of procedure.
15	1/19/07	All	DCR-5244. Complete rewrite to implement the Waste Isolation Pilot Plant Hazardous Waste Facility Permit requirements resulting from the Section 311/Remote-Handled (RH) Permit Modification Request (PMR).
16	06/28/07	E2	DCR-6125. Minor change to clarify unknown IDCs.
17	08/29/07	3.6.1	DCR-6357. Add the WAP B4-3E requirement.
18	03/11/08	All	DCR-6412. Deleted references to MP-TRUW-8.3 being cancelled in support of CCP transition, and other editorial changes in accordance with MP-DOCS-18.3.
19	08/11/08	All	DCR-7404. Update AK Hierarchy with approved flowchart. Update Appendix G.
20	08/05/09	All	DCR-8240. Revised to incorporate Rev. 6.3 of the WAC (dated 02/05/2009), clarify handling offsite waste AK, and make editorial changes. Addressed CBFO comments. Periodic review.
21	03/15/10	Various	DCR-9075. Clarified when an AK baseline is required for off-site waste that is received and AK is used for characterization of the waste. Also editorial changes.
22	12/15/10	Various	DCR-9633. Revised to incorporate WIPP WAP permit renewal changes. Updated sections throughout for consistency with AK documentation and to clarify content of AK reports. Updated Section 3.1 to reflect use of the AK Database. Updated Section 4.0 to reflect forms included WSP package submittals. Deleted Appendix F and renumbered Appendix H to become Appendix F.

AMWTP MANAGEMENT PROCEDURE		
MP-TRUW-8.13, Rev. 25	Issued: 08/13/13	Effective: 08/14/13

Collection, Review, and Management of Acceptable Knowledge Documentation

Revision Number	Date Approved	Pages Affected	Description of Revision
23	02/07/11	Pages 9-10	DCR-9799. Steps 3.2.6 and 3.2.6.1 revised to clarify WIPP-WAP and WAC requirements for additional/supplemental AK documentation.
24	12/12/11	Various	DCR-10458. Revised Step 3.5.2.4.2 to accommodate WIPP WAP changes. Incorporated ITG Bluesheet-073.
25	08/09/13	Various	DCR-12055. Updated document based on EPA input during October 2012 tier inspection, WIPP WAP modifications, and made changes as part of routine update.

AMWTP MANAGEMENT PROCEDURE		
MP-TRUW-8.13, Rev. 25	Issued: 08/13/13	Effective: 08/14/13

Collection, Review, and Management of Acceptable Knowledge Documentation

TABLE OF CONTENTS

1.0 PURPOSE/SCOPE 1

2.0 ROLES AND RESPONSIBILITIES 4

3.0 PROCEDURE 5

3.1 General Information 5

3.2 AK Data Collection, Review, and Evaluation 7

3.3 Prepare AK Document 13

3.4 Development of AK Reports 16

3.5 Prepare an AK Summary Report 18

3.6 AK Sufficiency Determination Request Preparation 23

3.7 Resolution of Inconsistencies and Discrepancies and Reevaluation of AK Information 24

3.8 Evaluation of Characterization Data and Waste Stream Profile Finalization 28

3.9 Accuracy Assessments 30

3.10 Records Management 32

4.0 DEFINITIONS 32

5.0 REFERENCES 37

6.0 RECORDS 38

7.0 EXHIBITS 39

8.0 APPENDICES 39

Appendix A – General Overview of TRU Waste Characterization Data Processing and Reporting by SPO A1

Appendix B – AK Summary Report for a Waste Stream B1

Appendix C – AK Sufficiency Determination Request—AK Summary Report.....C1

Appendix D – AK Resolution Ledger D1

Appendix E – Guidelines for Common AK Discrepancies or Inconsistencies E1

Appendix F – AK Document F1

Appendix G – Sample Formats for Accuracy Assessment.....G1

AMWTP MANAGEMENT PROCEDURE		
MP-TRUW-8.13, Rev. 25	Issued: 08/13/13	Effective: 08/14/13

Collection, Review, and Management of Acceptable Knowledge Documentation

1.0 PURPOSE/SCOPE

This Advanced Mixed Waste Treatment Project (AMWTP) management procedure (MP) outlines the methods and procedures for AMWTP personnel and/or subcontractors performing *acceptable knowledge* (AK; see def.) collection, review, compilation, evaluation, and management of AK documents in accordance with MP-TRUW-8.2, Quality Assurance Project Plan. Acceptable knowledge documents are prepared in support of MP-TRUW-8.1, Certification Plan for INL Transuranic Waste, and CCP-PO-003, CCP Transuranic Authorized Methods for Payload Control (CCP CH-TRAMPAC), requirements. In addition, this procedure describes the approach used to resolve discrepancies found in AK sources or between characterization data and AK and provides guidance for preparation of the AK documents, AK reports, AK summary reports, and AK Sufficiency Determination Requests. Implementation of this procedure ensures that a consistent, defensible, and auditable AK record is created for the Department of Energy (DOE) sites that generated *transuranic (TRU) waste* (see def.) inventory to be characterized by the AMWTP, as well as preparing the AK for AMWTP operations. Procedural steps are performed by the AK expert (AKE) or designee unless otherwise specified.

A flowchart of the AMWTP AK documentation process is shown in Figure 1, Document hierarchy and information flow for AK.

Relevant AK source documents are collected, summarized, and recorded in the AK source document inventory per Section 3.2.

AK documents are developed for each generator site from the information in the source documents per Section 3.3.

AMWTP receives waste in compliance with MP-TRUW-8.40, INL Waste Acceptance and Transfers, and MP-TRUW-8.41, Offsite Waste Acceptance. The received waste may require the following actions:

- Characterization, profiling, and certification by AMWTP for disposal at Waste Isolation Pilot Plant (WIPP)
- Characterization, profiling, and certification by another certified program (e.g., CCP for disposal at WIPP).

AMWTP develops AK documents for *legacy waste* (see def.), AMWTP *newly-generated* (see def.) waste, and waste that is received from non-AMWTP generators (i.e., waste received in accordance with MP-TRUW-8.40) and that is included in an existing WIPP-approved waste stream profile form (WSPF) or developed into a new AMWTP WSPF per Section 3.3.

When offsite waste is sent to AMWTP for treatment/storage, and the waste is to be included in an existing AMWTP WIPP-approved WSPF (or developed into a new WSPF), the AK documents and process knowledge (PK) documents that are submitted for that waste in compliance with MP-TRUW-8.41 are placed into an AMWTP document as outlined in Step 3.3.2.

AMWTP does not develop AK documents for offsite generator and non-AMWTP generator wastes that are not profiled by AMWTP.

AK/PK source documents supporting the development of AK and summary reports are added to the AK record as applicable. Pertinent information to support characterization is added to RPT-TRUW-05, Waste Matrix Code Reference Manual; RPT-TRUW-06, AMWTP AK for Newly Generated Waste; RPT-TRUW-07, Determination of Radioisotopic Content in TRU Waste Based on Acceptable Knowledge; RPT-TRUW-12, AMWTP Waste Stream Designations, and other AK documents, as appropriate.

AK reports, RPT-TRUW-05, RPT-TRUW-07, and RPT-TRUW-12, are prepared in accordance with Section 3.4. RPT-TRUW-05 and RPT-TRUW-07 are topic specific references of AK information to be used by operations and validators during characterization activities. Radionuclide specific WIPP Waste Acceptance Criteria (WAC) required information is documented in RPT-TRUW-07 to be used during AK summary report development. RPT-TRUW-12 is used to document historical and current characterization information for TRU wastes. Historical characterization information was obtained from an Idaho National Engineering Laboratory (INEL) and a British Nuclear Fuels Ltd (BNFL) engineering design file (EDF). These two EDFs (i.e., RWMC-EDF-803, Chemical Constituents in Transuranic Storage Area [TSA] Waste, and AMWTP-EDF-199, Advanced Mixed Waste Treatment Project Waste Stream) were developed to support the Resource Conservation and Recovery Act (RCRA) storage and treatment activities at the AMWTP (previously identified as the Radioactive Waste Management Complex [RWMC]). The TRU waste characterization information contained within these two EDFs is included, as applicable, into RPT-TRUW-12, which is updated as additional AK or characterization data are evaluated and when WSPFs are approved.

AK summaries for *waste streams* (see def.) or for AK sufficiency determination requests are developed in accordance with Sections 3.5 and 3.6, respectively. WIPP-Waste Acceptance Plan (WAP)/WAC required information documented in AK documents, and AK reports are used to develop the AK summaries. Evaluation of characterization data and revision of the AK summary, if required, to support preparation of WSPFs is described in Section 3.8.

Preparation of WSPFs and characterization information summaries (CISs) is described in MP-TRUW-8.14, Preparation of Waste Stream Profile Forms.

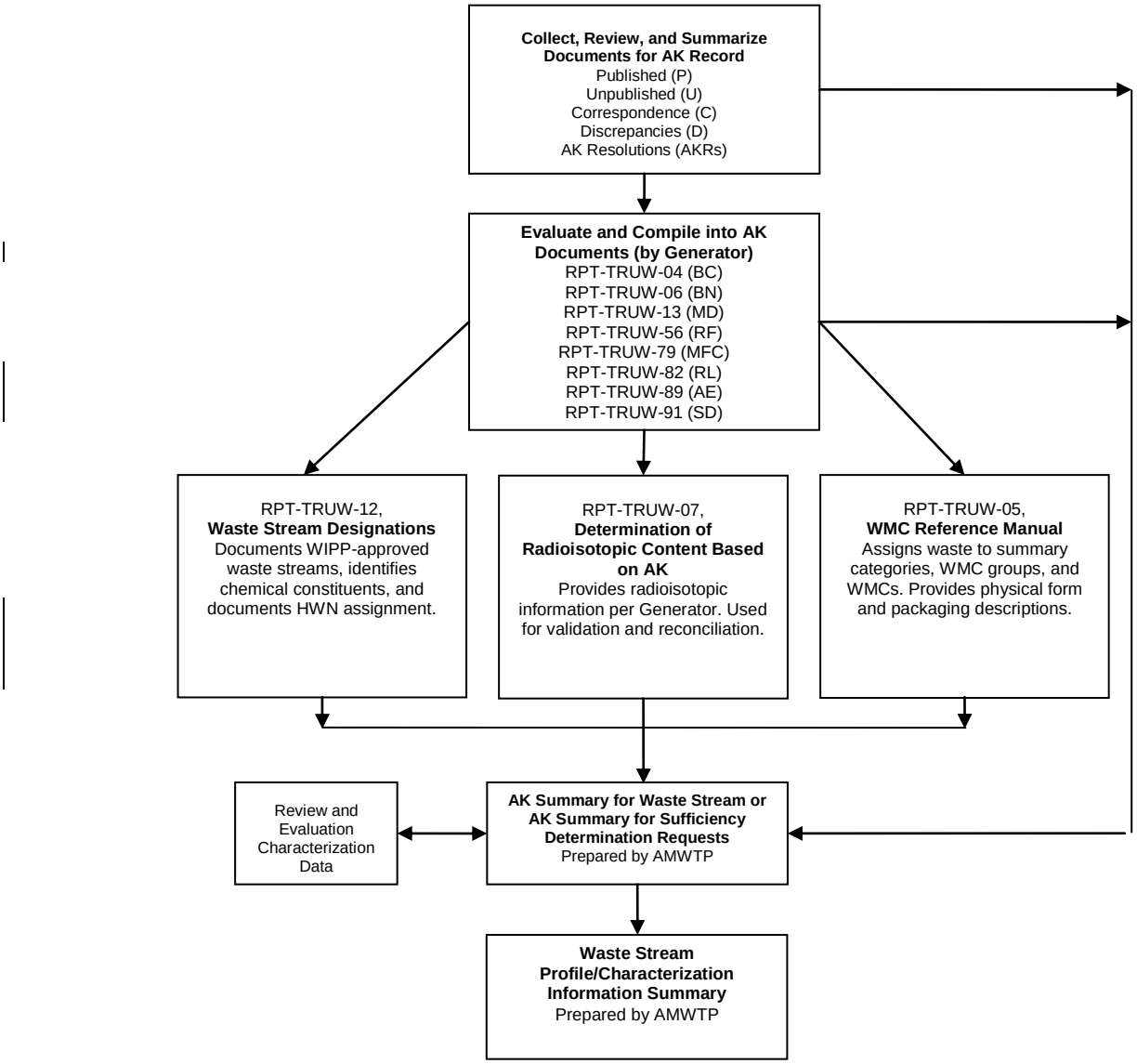

Figure 1. Document hierarchy and information flow for AK.

2.0 ROLES AND RESPONSIBILITIES

Performer	Responsibilities
Acceptable Knowledge Expert (AKE)	• Ensures current versions of the references listed in Section 5.0 are available, including the WIPP-WAP and Transuranic Waste Acceptance Criteria (WAC) for WIPP • Identifies potential sources of AK documentation, including, but not limited to, cognizant personnel, libraries, and other historical documentation sources • Collects/obtains, reviews, and compiles AK documentation • Maintains the unique Form-1084, *AK Source Document Reference List* (see def.), and assigns tracking numbers to new AK documents • Reevaluates and updates/augments AK information based on characterization, new AK source documents, and updated AK information • Resolves AK discrepancies in accordance with this procedure • Defines data limitations of AK documentation • Applies AK information to assign *waste matrix codes* (WMCs; see def.), recommend hazardous waste number assignments for AMWTP legacy wastes, delineate waste streams, estimate *waste material parameter* (see def.) weights, and confirm defense waste determination • Coordinates the identification and collection of AK documentation with sites that generate/generated the TRU waste • Prepares AK Sufficiency Determination Requests, AK reports for generators of AMWTP legacy wastes, AK summary reports, and AK accuracy reports • Maintains open communication with physics personnel/nondestructive assay (NDA) subject matter expert (SME) in the determination of WIPP required radionuclide information and in the resolution of acceptable knowledge discrepancies with NDA data.

Performer	Responsibilities
Site Project Manager (SPM) or Designee	• Reviews and approves this procedure and all revisions • Notifies AKE of any inconsistencies between characterization data and AK • Ensures that AK process information meets the *Quality Assurance Objectives* (QAOs; see def.) relating to accuracy, completeness, comparability, precision, and representativeness • Reviews and approves U.S. Environmental Protection Agency (EPA) hazardous waste numbers recommended by the AKE.

3.0 PROCEDURE

3.1 General Information

A. Information taken from relevant AK source documents is incorporated into an AK or the AK reports (RPT-TRUW-05, RPT-TRUW-07, or RPT-TRUW-12) to present AK information in a logical sequence, progressing from general TRU waste management and plant operations to more detailed, waste stream-specific information in accordance with the WIPP-WAP and the WAC. The information gathered and reviewed includes generator data, storage history, and documents that include certification and characterization activities performed by the AMWTP.

B. Some of the AMWTP documents (procedures and reports) used to address compiling, managing, and evaluating AK information, and reporting data to WIPP to obtain approval for waste shipment and disposal, are summarized in Appendix A, General Overview of TRU Waste Characterization Data Processing and Reporting by the SPO. Various other documents are available within the AMWTP EDMS and/or AK record.

C. This procedure is written to specifically address the WIPP-specific requirements as listed below:

- Collection, compilation, evaluation, and assembly of AK information
- Review and evaluation of AK source information
- Derivation of specific AK parameters from the AK source information
- Preparation of AK documents
- Delineation of waste into waste streams
- Preparation of AK summary report for Waste Stream
- Preparation of AK Sufficiency Determination Requests
- Resolution of inconsistencies and discrepancies and reevaluation of AK
- Identification and assignment of EPA Hazardous Waste Numbers (HWNs)
- Finalization of waste stream
- Assessment of AK accuracy.

D. This procedure is also used any time AK information must be resolved or reevaluated.

NOTE: *All steps in this procedure are the responsibility of the AKE unless the step indicates otherwise.*

3.2 AK Data Collection, Review, and Evaluation

NOTE 1: *The specific method used to collect and assemble AK records—including the origin of the documentation, how it is used, and any limitation associated with the information—is described in this section. To create a coherent, auditable, and accessible record, relevant AK information is reviewed, categorized, filed, and controlled as described in this procedure.*

NOTE 2: *PK/AK documents (e.g., AK source/reference documents, waste management program and waste stream information [such as* AK roadmaps *(see def.)], and PK/AK summary reports) addressing offsite/non-AMWTP waste are supplied by the offsite or non-AMWTP generator and/or their representative in compliance with MP-TRUW-8.40 or MP-TRUW-8.41.*

3.2.1 When feasible, collect source documents for each generator site (including AMWTP) by obtaining complete documents or copies of documents.

3.2.1.1 When it is not feasible, summarize information (or request a summary) along with portions of the document that may be available, such as cover sheets, executive summaries, introductions, and table of contents.

NOTE 1: *Form-1068, Acceptable Knowledge Source Document Summary; Form-1066, TRU Waste Management AK Checklist; Form-1067, TRU Waste Stream AK Documentation Checklist; and Form-1084 may be printed from the AK Document Database.*

NOTE 2: *The unique identifier in Step 3.2.2 is the next P, U, C, or D number from the AK Document Database. This identifier serves as the reference number for the AK source document in the AK source document inventory and the AK record.*

NOTE 3: *Primary AK documents (i.e., AK and PK summaries from certified programs) that are themselves used as references within a separate AMWTP AK Generating Facility or* a separate *AMWTP AK summary do not need to have the documents that are referenced within those primary AK documents summarized on the AMWTP Form-1068. These secondarily referenced documents associated with the primary AK documents only need to be available.*

3.2.2 Assign a unique identifier (alphanumeric) to AK source documents.

3.2.2.1 Use the following convention:

- *Correspondence* (see def.) (C001A or C001S, C002A, etc.)
- *Discrepancy report* (DR; see def.) (D001A or D001S, D002A, etc.)
- *Published documentation* (see def.) (P001A or P001S, P002A, etc.)
- *Unpublished data* (see def.) (U001A or U001S, U002A, etc.).

3.2.2.2 Assign documents that can be used to address one or more of the required elements (mandatory programmatic or waste stream information [WM and WS elements]) an ‘A’ suffix with the reference number.

3.2.2.3 Assign documents that are “supporting AK documents” (i.e., documents that are not sufficient to all parts of the WM or WS elements, but do provide supporting information for one or more of the elements) an ‘S’ suffix with the reference number.

3.2.2.4 Complete Form-1068 for each source document added to the AK source document inventory and include in the AK record. Instructions are included with the form.

3.2.2.4.1 If the documentation cannot be reproduced or portions of the document copied or removed from the source (e.g., classified documents or databases), summarize AK information obtained from the review of the document and the reason the document is not included on a Form-1068.

3.2.2.4.2 Document information obtained during review of electronic databases such as the source, date, and type of information extracted on a Form-1068. (Database maps, dictionaries, format, history, or other supporting documentation should also be obtained if applicable and available.)

3.2.2.4.3 Document appropriate data limitations or discrepancies identified on the Form-1068.

NOTE: *Form-1066 provides a roadmap to AK documentation used to address mandatory program information compiled for each generator site. This checklist is periodically updated as additional AK source documents are collected and reviewed, and the Form-1068 is completed as described in Step 3.2.2.*

3.2.3 Prepare a Form-1066 for each generator site.

3.2.3.1 When an AK document is issued, print a copy of Form-1066 and submit to Records Management as described in Step 3.2.2.

NOTE: *Form-1067 provides a roadmap to AK documentation used to address mandatory waste stream information compiled for each generator site. This checklist is periodically updated as additional AK source documents are collected and reviewed, and the Form-1068 is completed as described in Step 3.2.2.*

3.2.4 Prepare a Form-1067 for each waste Item Description Code (IDC) or waste stream.

3.2.4.1 When a WSPF is approved, print a copy of the Form-1067 and include in the WSP package as described in Step 3.8.10.

3.2.5 Collect, as appropriate, WIPP-WAP defined additional AK documentation and WAC defined supplemental AK documentation as identified in MP-TRUW-8.2 and MP-TRUW-8.1 respectively, including, but not limited to, information from the following sources:

- Process design documents (e.g., Title II Design)
- Standard operating procedures that may include a list of raw materials or reagents, a description of the process or experiment generating the waste, and a description of the waste generated and how the wastes are managed at the point of generation
- Preliminary and Final Safety Analysis Reports and technical safety requirements
- Waste packaging records
- Test plans or research project reports that describe the reagents and other raw materials used in experiments

- Site databases (e.g., chemical inventory database for Superfund Amendments and Reauthorization Act [SARA] Title III requirements)
- Information from site personnel (e.g., documented interviews)
- Standard industry documents (e.g., vendor information)
- Analytical data relevant to the waste stream, including results from fingerprint analyses, spot checks, routine verification sampling, or other processes that collect information pertinent to the waste stream. This may include new information that augments required information (e.g., visual examination [VE] not performed in compliance with the WIPP-WAP, radiography screening for prohibited items)
- Material Safety Data Sheets (MSDS), product labels, or other product information
- Laboratory notebooks that detail the research processes and raw materials used in an experiment
- Sampling and analysis data from comparable or surrogate waste streams (e.g., equivalent non-radioactive materials)
- Waste packaging, waste disposal, building or nuclear material management area (NMMA) logs or inventory records
- Test plans, research project reports, or laboratory notebooks that describe the radionuclide content of materials used in experiments
- Historical analytical data relevant to the isotopic distribution of the waste stream.

3.2.5.1 Include WIPP-WAP defined additional AK information as appropriate to augment required information and provide any other information obtained to further delineate waste streams and include WAC defined supplemental AK information, as appropriate, to support the waste's isotopic distribution.

3.2.5.2 Include all additional specific, relevant, acceptable knowledge documentation assembled and used in the acceptable knowledge process, whether it supports or contradicts any required acceptable knowledge documentation, and provide an explanation for its use (e.g., identification of a toxicity characteristic).

3.2.5.3 Use additional documentation, if needed, to further document the rationale for the hazardous characterization results.

NOTE: *Similar to required information, if discrepancies exist between additional information and the required information, then sites may consider applying all hazardous waste numbers indicated by the additional information to the subject waste stream, but must assess and evaluate the information to determine the appropriate hazardous* waste *numbers are consistent with RCRA requirements.*

3.2.5.4 Document and place all information considered in the auditable record, including applicable *discrepancy* (see def.) resolution documentation.

3.2.6 Document the relevant AK information resulting from meetings, telecommunications, and interviews, including interviewer name, interviewee (or attendee) name, date, and details of discussions on a Form-1069, AK Telecon/Interview Form, (instructions attached).

3.2.6.1 Summarize the information on a Form-1068 as a source document with a "C" designation and include in the AK record in accordance with Steps 3.2.2 through 3.2.2.4.3.

3.3 Prepare AK Document

NOTE 1: *Prior to developing an AK summary report for a waste stream, the relevant AK information is compiled into an AK document for each generator site.*

NOTE 2: *PK/AK documents supplied by the offsite generator and/or their representative in compliance with MP-TRUW-8.41 are used to develop AK documents per Step 3.3.2.*

NOTE 3: *AK documents and AK Summary Reports are issued as AMWTP reports and address all of the mandatory waste management and waste stream information. Mandatory waste management information for the generator site common to all waste generated is primarily presented in the first general sections of the AK document. Waste stream information is presented in subsequent sections for the preliminary waste groupings based on process and physical form. This is a preliminary grouping of wastes for organization, and these groupings may not represent the final waste stream delineation that is determined for a WSPF. The mandatory waste stream information is presented in the AK Summary Reports in accordance with Section 3.5.*

3.3.1 Ensure that Form-1066 and Form-1067, for the generator and each waste IDC, have been compiled per Section 3.2.

3.3.1.1 For each waste group, ensure that AK information bounds the AMWTP waste inventory with regard to time of generation, area of generation, and generation process.

NOTE: *Form-1066 and Form-1067 are used to document that the mandatory management and waste stream information have been compiled for the generator and each waste IDC.*

3.3.1.2 If information compiled on the Form-1066 or Form-1067 indicates that required elements have not been adequately addressed, notify SPM.

3.3.2 Develop a document that is composed of generator-supplied AK/PK documents for wastes sent to AMWTP for treatment/storage that are in compliance with MP-TRUW-8.41 and that are included in existing AMWTP WIPP-approved WSPFs or new AMWTP WSPFs.

3.3.2.1 Place these AK/PK documents into a TRU program report, along with a brief summary outlining the intent of the referenced documents within the document.

3.3.2.2 Include the applicable AK source documents referenced in the AK/PK documents in the AK records.

NOTE: *The final defense-related determination, high-level waste and spent nuclear fuel assessment for AMWTP designated waste streams is documented in the applicable AK summary in accordance with the Appendix B outline.*

3.3.3 Perform an assessment of operating documents to determine if the TRU waste materials at the generator site meet the definition of defense waste and are not high-level waste or spent nuclear fuel as specified in the WAC.

3.3.4 Prepare a discussion/summary of the mandatory waste management program information including the defense related assessment for each generator site in accordance with the outline provided in Appendix F, AK Document.

NOTE: *Wastes (IDCs) are initially assigned to preliminary waste groups in the AK document and then delineated into waste streams based on the WIPP-WAP definition of waste stream (WIPP-WAP, Section C-0a) when the AK Summaries are prepared per Section 3.5.*

3.3.5 Delineate preliminary waste groups based on compiled AK and prepare a discussion/summary of the waste stream information for each waste group in accordance with the outline for the section(s) that describe the waste(s) as provided in Appendix F and include the following:

3.3.5.1 Review pertinent AK information, group wastes based on similarities (e.g., generation process, physical form, etc.), and develop a section in the AK document for each waste group.

3.3.5.2 Include waste IDC descriptions that address the waste stream specific information for each of the IDCs included in a preliminary waste group.

3.3.5.3 Document waste group basis, rationale, and assumptions used in the AK document.

3.3.6 For each waste group, identify chemical compounds from the AK information that are potential waste constituents and any HWNs assigned by the generator for each waste.

3.3.6.1 Ensure that AK source documents containing HWN information are included in the AK record as described in Section 3.2.

3.3.6.2 Provide a description of the chemicals used in applicable process for each waste group in the appropriate AK document section.

3.3.7 Determine the presence/absence of prohibited items.

3.3.7.1 Identify any WIPP-WAP prohibited items or conditions that may be present in waste containers for each section that describes the waste(s) or in the general section that describes the waste operations.

NOTE: *Prohibited items or conditions identified as potentially present are compiled on the waste stream specific summary checklist (i.e., WS8 element on Form-1067).*

3.3.7.2 If AK information indicates the potential presence of prohibited items in waste containers, an appropriate statement is added to the waste description in RPT-TRUW-05.

3.3.8 Determine radionuclides present in the waste.

3.3.8.1 Ensure that AK source documents containing radionuclide data are included in the AK record as described in Section 3.2.

3.3.8.2 Identify any radionuclides that may be present in waste containers and any other pertinent information needed to

identify isotopic ratios and document in the appropriate general section of the AK document.

3.3.9 Determine the presence/absence of polychlorinated biphenyls (PCBs).

3.3.9.1 If PCBs are identified, document the earliest date of waste generation, the estimated weight of the PCBs (in kilograms), and a description of the type of PCB(s) for waste determined to be PCB contaminated in the appropriate section in the AK document.

3.4 Development of AK Reports

3.4.1 AMWTP Waste Matrix Code Reference Manual

NOTE: *RPT-TRUW-05 is a reference manual that provides physical waste form descriptions for operators and validators to ensure proper assignment of* Summary Category Group *(SCG; see def.) and WMC following best management practices at the operations level. SCGs and WMCs are verified by the operators during real-time radiography (RTR) and VE.*

3.4.1.1 Develop and update reference tables for each IDC waste as illustrated in the RPT-TRUW-05, Table 3.1, with pertinent AK information regarding waste generator, physical form, packaging, and other information to aid operators and validators in identification of wastes and correlation of the physical form and SCG and WMC assignment.

3.4.1.2 Provide information pertinent to characterization activities such as potential prohibited items, acceptable and unacceptable packaging variations, and PCB information.

3.4.1.3 Describe typical variations of waste information (e.g., waste composition, packaging, prohibited items) based on data collected during RTR and VE exams in RPT-TRUW-05, Section 3.0.

3.4.2 Waste Stream Radionuclide Information Summary

NOTE: *RPT-TRUW-07 was developed to provide the radiological composition of TRU wastes that are characterized by the AMWTP. The information provided in RPT-TRUW-07 fulfills these requirements as identified in the WIPP-WAC.*

3.4.2.1 AKE: Coordinate with the NDA SME to determine default radioisotopic ratios for those radionuclides expected based on the compiled AK as required by the WAC.

A. When feasible, the results are used to calculate activities for nuclides included in the 10 WIPP-tracked radionuclides and masses (^{241}Am, ^{238}Pu, ^{239}Pu, ^{240}Pu, ^{242}Pu, ^{233}U, ^{234}U, ^{238}U, ^{90}Sr, and ^{137}Cs).

B. Direct measurements are used to establish the isotopic ratios for use in quantifying radionuclides. Quantitative estimates for the lower limit of detection (LLD) shall not be used when calculating related radiological properties.

3.4.2.2 Summarize the radionuclide information for each generator site in RPT-TRUW-07.

3.4.2.2.1 Identify the radionuclides that may be expected to be quantifiable or calculated by NDA technique in the wastes.

NOTE: *Measured isotopic ratios for ^{241}Am may confirm existing AK by waste stream. However, it may become necessary to measure ^{239}Pu to ^{241}Am isotopic ratios on all containers in certain waste streams due to the fluctuation of ^{241}Am.*

3.4.2.2.2 Document all numerical adjustments applied to derive the materials isotopic distribution (e.g., scaling factors, decay/ingrowth correction, and secular equilibrium considerations).

3.4.2.2.3 Identify and document the two most prevalent radionuclides and their ratios in the isotopic mix for each generator site.

3.4.3 AMWTP Waste Stream Designations

NOTE: *RPT-TRUW-12 is referenced within RWMC/AMWTP permit and is used as one of the references to support safe storage/treatment.*

3.4.3.1 Update the WMC assignment (RPT-TRUW-12, Table 1), and delineation of waste into waste streams for characterization (RPT-TRUW-12, Tables 2, 3, 4, 5, and 6) as AK summaries are developed.

3.4.3.2 Identify and/or update potential hazardous waste constituent/chemical property and include generator and AK/WIPP assigned HWNs as applicable (RPT-TRUW-12, Appendix A, AK Summary Report for a Waste Stream).

3.5 Prepare an AK Summary Report

NOTE: *Section 3.5 can be completed in parallel with Section 3.8.*

3.5.1 Develop an AK summary report for the waste stream in accordance with the outline provided in Appendix B, and include the following:

3.5.1.1 Incorporate the required waste stream information as identified in Section 3.2, from the AK document and AK reports, as applicable.

3.5.1.2 Ensure that the Form-1067 for the waste stream has been prepared.

3.5.1.3 Select a WMC from DOE/LLW-217, DOE Waste Treatability Group Guidance, corresponding to the predominant waste material in each waste stream as determined from the review of the AK documents.

NOTE: *Container inventory is estimated using, but is not limited to, the data sources listed below:*

- *Container inventory from the Waste Tracking System (WTS)*
- *Historical container inventories (e.g., INEL-95/0412, Waste Description Information for Transuranically-Contaminated Waste Stored at the Idaho National Engineering Laboratory, and RWMC-EDF-837, Estimated Earthen and Geofabric Covered TRU Waste Inventory in the TSA for Radioactive Waste Management Complex).*

3.5.1.4 Develop a container inventory and establish waste stream volumes and time periods of generation for the waste stream, as required by the WIPP-WAP.

NOTE: *The AK information is used to support load management decisions.*

3.5.1.5 Using the best available AK information, determine the percentage of the waste stream that is ≤ 100 nCi/g.

NOTE: *Waste material parameter weights are based on historical waste generator, industry documentation, generator estimates, or characterization data.*

3.5.1.6 Prepare a memorandum to file documenting the method used to estimate waste material parameter weights for each waste.

3.5.1.7 Identify all chemical constituents based on information in the site specific AK document, AK reports, or other source documents.

3.5.1.8 Document how the site has historically managed the waste, including the historical regulatory status of the waste (i.e., TRU mixed versus TRU nonmixed waste).

NOTE: *All HWNs indicated in the AK may be conservatively applied; but the information must be assessed and evaluated to determine the appropriate HWNs are consistent with RCRA requirements.*

3.5.2 Evaluate the applicable AK source documents and determine the appropriate HWNs that are consistent with RCRA requirements, considering previous generator assigned HWNs and site historical management of the waste according to the following steps:

3.5.2.1 Review the collected AK information to determine if the waste is a listed waste or is mixed with waste listed in 40 CFR 261, Subpart D; specifically F- and K- listed waste and P- and U- listed chemicals (e.g., F001, F002, F003, F004, F005, F007, F009, P015, and U134).

3.5.2.2 Identify all listed EPA HWNs unless justification for not assigning the HWN is documented on Form-1784, Acceptable Knowledge Discrepancy Report, in accordance with Step 3.7.3.

3.5.2.3 Review the collected AK information to determine if the documentation identifies the presence in the waste of toxicity characteristic constituents specified in 40 CFR 261, Subpart C.

3.5.2.4 Identify EPA HWNs, unless data are available to demonstrate that the concentration of the constituent is below the regulatory threshold, or the waste already carries the listed HWN for the constituent.

3.5.2.4.1 If different sources of information indicate different hazardous wastes are present, then either conservatively assign HWNs and document in the AK Summary OR assign only those HWNs deemed appropriate and consistent with RCRA requirements and document on Form-1784 in accordance with Step 3.7.3.

3.5.2.4.2 If a toxicity characteristic hazardous constituent is identified during the review of the available AK, then evaluate and document the assignment of the applicable HWNs in the AK Summary.

3.5.2.4.3 If the waste has been managed as mixed and non-mixed, then document the justification for including these wastes into one waste stream on Form-1784 in accordance with Step 3.7.3.

3.5.2.5 Document AK-determined HWNs (or non-mixed management status) in the AK summary report.

3.5.2.6 Coordinate with Environmental, Safety, and Health (ES&H) to ensure that all identified HWNs are addressed by the AMWTP HWMA/RCRA Permit.

3.5.2.6.1 The AMWTP HWMA/RCRA permit requirements and state-enforced agreements are considered in the assignment of HWNs.

3.5.2.7 Ensure all information used to justify the assignment of HWNs have been placed in the auditable record as described in Section 3.2.

3.5.2.8 Ensure that the assignment of HWNs in the auditable record to all required documentation has been tracked per the requirements described in Section 3.2.

3.5.3 Document if any of the waste in the waste stream contains PCBs in concentration equal to or greater than 50 ppm.

3.5.3.1 If present, identify the type of PCB contaminated wastes (e.g., remediation, bulk product).

3.5.4 Document if beryllium is identified as a constituent of the waste.

3.5.4.1 If present, provide an estimate of the weight percentage of beryllium present in the waste stream.

3.5.5 Document radionuclides of concern present in the waste.

3.5.5.1 Include the two most prevalent radionuclides for the waste stream (see RPT-TRUW-07).

3.5.5.2 Include the percent of the waste stream expected to be TRU <100 nCi/g if load management is applicable for the waste stream.

3.5.6 Include description of AMWTP controls which screen for prohibited items.

3.5.7 Ensure relevant documentation is consistent with AK document information and other applicable AK reports (e.g., RPT-TRUW-05, RPT-TRUW-12, and RPT-TRUW-07).

3.5.8 Review the AK Resolution (AKR) ledger (See Appendix D, AK Resolution Ledger), and incorporate appropriate information from *Acceptable Knowledge Resolution (*AKR; see def.) (Form-1070, Acceptable Knowledge Resolution (AKR) Checklist), into the AK summary report.

3.5.9 Review the list of discrepancy reports (Form-1784) in the AK Record and incorporate information from applicable discrepancy reports (Form-1784) into the AK summary report.

NOTE: *In-house reviews and approvals are conducted as specified in MP-DOCS-18.4, Document Control.*

3.5.10 Distribute draft AK Summary for internal review.

3.5.11 Incorporate comments and provide final report to SPM as described in Step 3.8.6.

3.6 AK Sufficiency Determination Request Preparation

NOTE: *An AK Sufficiency Determination Request may be submitted to Carlsbad Field Office (CBFO) to meet all or part of the waste characterization requirements if the available AK information is complete and adequate to meet the requirements. The AK Sufficiency Determination Request includes the following steps, at a minimum.*

3.6.1 Evaluate the AK information available for a waste stream to determine if an AK Sufficiency Determination Request is possible or desirable to be exempt from the requirement to perform RTR radiography or VE based on AK.

NOTE: *Although WIPP may allow for an AK Sufficiency Determination, the State of Idaho Department of Environmental Quality (DEQ) and the AMWTP HWMA/RCRA Permit still require that all existing Transuranic Storage Area (TSA) waste containers go through RTR or visual examination for characterization. Concurrence from AMWTP Environmental must be received prior to submittal of an AK Sufficiency Determination Request exempting AMWTP from RTR or VE.*

3.6.2 If a Sufficiency Determination is required, prepare an AK summary report for the AK Sufficiency Determination Request as outlined in Appendix C, AK Sufficiency Determination Request-AK Summary Report.

3.6.2.1 Include the mandatory program information as required by the WIPP-WAP.

3.6.2.2 Include the information identified in Steps 3.5.1.1 through 3.5.9.

3.6.3 Provide an *AK roadmap*.

3.6.4 Provide a complete reference list including all mandatory and additional AK documentation.

3.6.5 Provide relevant additional AK information for the required programmatic and waste stream data addressed in the AK summary report, as applicable, or if requested by CBFO.

3.6.6 Identify any mandatory requirements supported only by upper tier documents (i.e., there is insufficient supporting data).

NOTE: *Current revision of this procedure demonstrates that AMWTP has developed a written procedure for compiling AK information and assigning HWNs.*

3.6.7 Describe or otherwise demonstrate that the AK process described in the WIPP-WAP was followed (e.g., AK personnel were appropriately trained, discrepancies were documented, etc.).

3.6.8 Provide information showing that AMWTP has assessed the AK process (e.g., internal *audits* [see def.]).

3.7 Resolution of Inconsistencies and Discrepancies and Reevaluation of AK Information

NOTE 1: *Appendix E, Guidelines for Common AK Discrepancies or Inconsistencies, contains guidelines for determining appropriate actions to take for the most commonly encountered AK inconsistencies or discrepancies.*

NOTE 2: *Data collected from RTR, visual examinations, and radioassay is reviewed on a container-by-container basis to verify that the contents are consistent with the AK for the waste stream.*

3.7.1 SPM/Designee: Notify an AKE of any inconsistencies between characterization data and AK identified during validation, characterization, or confirmation processes.

NOTE 1: *AKRs (Form-1070) written to resolve discrepant radioisotopic (assay) data are reviewed and cosigned by an AKE SME and a NDA SME.*

NOTE 2: *AKRs (Form-1070) are tracked in the AKR Ledger (See Appendix D, AKR Ledger), and maintained by Records Management.*

3.7.2 Document inconsistencies between AK and characterization data (e.g., RTR, radioassay isotopic, or composition) on Form-1070.

NOTE: *Reassignment of WMC for a waste container includes reassignment of the IDC.*

3.7.2.1 Take the following minimum steps to reevaluate AK when the contents of a waste container identified during radiography or visual examination are inconsistent with the WMC shown in WTS (these steps are incorporated into Form-1070):

3.7.2.1.1 Review existing information based on the container identification number and document all differences in HWN assignments.

3.7.2.1.2 If differences exist in the HWN(s) assigned, reassess and document all required AK information associated with the new designation.

3.7.2.1.3 Verify and document that the waste material to be reassigned a WMC was generated within the specified time period, area and buildings, and waste generating process, and that the process material inputs for the waste are consistent with the waste material parameters identified during radiography or visual examination.

3.7.2.1.4 Record all changes to AK records.

3.7.2.1.5 If inconsistencies are for a waste container that requires reassignment of the WMC, document the disposition of the container.

3.7.2.1.6 If discrepancies exist in the AK information for the revised WMC, document the segregation of the affected portion of the waste stream, and define the action(s) necessary to fully characterize the waste.

3.7.2.2 If *data quality objective* (DQO; see def.) reconciliation indicates that a HWN discrepancy exists, follow the steps in Section 3.8.

3.7.2.3 If Form-1070 indicates a WMC change, waste stream assignment change, or HWN change to a waste population with an approved WSPF, or identifies a noncompliance, then issue a nonconformance report(s) (NCR) if one has not already been issued.

A. If a WMC changes and noncompliant items or HWN additions are identified that potentially affect an approved waste stream, shipment of the waste stream is suspended until the discrepancy is resolved. This shall be indicated on the associated NCR.

B. An NCR shall also be issued for any Acceptable Knowledge Resolution Checklist that is issued outside of the SPM validation process (MP-TRUW-8.9, Level II Data Validation) or DQO Reconciliation process (MP-TRUW-8.11, Data Reconciliation) to ensure that containers with open AK discrepancies are not shipped.

NOTE: *Appendix E provides guidelines for updating documents for the most common inconsistency resolutions.*

3.7.2.4 Indicate on the Form-1070 any required updates to AK documentation.

3.7.2.5 Sign the Form-1070 when a resolution is determined. Ensure required actions (e.g., document updates, etc.) are completed for the resolution checklist to be signed unless at least ONE of the following conditions is met:

- The resolution requires one or more minor updates to an AK document(s) and the required update(s) is being tracked in the AK Resolution Ledger
- The resolution requires one or more major updates and the required action(s) is being tracked with an NCR.

NOTE: *Any containers with open discrepancies or NCRs are not acceptable for shipment*.

3.7.2.6 Do not sign Form-1070 if the discrepancy is to be left open.

NOTE: *Depending on the significance of the revision, minor changes can be deferred as long as the item is being tracked in the AK Resolution Ledger.*

3.7.2.7 Update AK documentation as specified in Form-1070.

3.7.2.8 If the AK radionuclide information is inconclusive and/or the radioassay data are inconclusive or inconsistent with AK related to isotopics or composition, flag the associated radioassay batch for NDA SME review and disposition.

A. The proposed technical approach in this event is to use previous radio-assay (RA) data if available from containers with the same or similar waste matrix to assign radioisotopes to the waste and scale their corresponding activities.

B. In the event that previous data are not available, the flag remains unresolved on the container until sufficient related data are recorded.

C. The rationale for each review and resolution is described in detail in an AK resolution to be added to the AK record.

NOTE 1: *Form-1784 written to resolve radionuclide or assay data are reviewed and cosigned by the AKE/SME and the NDA SME.*

NOTE 2: *Instructions are provided with Form-1784.*

3.7.3 Complete a Form-1784 when a discrepancy is identified between AK source documents (including additional AK information) during AK document review or during development of AK document or AK summary report. The DR should include all pertinent information, including but not limited to:

- List of AK documents with discrepant information
- List of AK documents used in resolution
- Background information pertinent to the discrepancy
- Assumptions made in determining the resolution and their basis

- Rationale and conclusions
- Resolution
- Any AK documents that need revision to include the resolution.

3.7.4 Complete a Form-1068 for the DR in accordance with Steps 3.2.2 and 3.2.2.4.

3.8 Evaluation of Characterization Data and Waste Stream Profile Finalization

NOTE: *Characterization data from RTR, visual examination, and radioassay collected by AMWTP are used to augment the AK.*

3.8.1 If the source of the constituent is identified as a spent solvent (40 CFR 261, Subpart D), or if it is the result of mixing a listed waste with a solid waste (40 CFR 261.3 [iv]), or if the source of the detected solvents cannot be identified, apply the appropriate HWN.

3.8.2 If a toxicity characteristic contaminant (40 CFR Part 261, Subpart C) is identified by AK as present in the waste and is not a listed waste or included as a listed waste, identify the toxicity characteristic EPA HWN, unless data are available that demonstrate the concentration of the constituent in the waste is less than the toxicity characteristic regulatory level or if results of evaluation does not require assignment of EPA HWN.

3.8.3 Include summaries of statistical evaluations and a statement confirming that all containers evaluated belong to the waste stream, as applicable.

3.8.4 Coordinate with the SPM the assignment of HWNs to the waste stream based on the results of the evaluation.

3.8.4.1 Complete Form-1187, Waste Stream Profile HWN Assignment Worksheet, to document the results.

3.8.4.2 Incorporate the worksheet into the AK Record with the WSP package per the directions in Step 3.8.10.

3.8.5 If the SPM determines that a new HWN is required to be added to waste with an approved WSPF (see Appendix E for guidelines on NCR corrective actions), issue an NCR.

3.8.5.1 SPM: Document the criteria used to determine the specific circumstances under which a WSPF is revised versus when a new WSPF is required.

3.8.5.2 AKE: Document the results on Form-1070 and complete a new or revised WSPF.

NOTE: *An NCR is not required in Step 3.8.6.*

3.8.6 If the SPM determines that an HWN change is required for a waste not included in an approved WSPF, document the changes on a Form-1070 and in the AK summary report.

NOTE: *An NCR and Form-1070 are not required in Step 3.8.7.*

3.8.7 If the SPM determines that an HWN change is conservatively applied for a waste not included in an approved WSPF, document the changes in the AK summary report.

3.8.8 Submit the AK summary report with the WSPF and CIS to CBFO for approval, in accordance with MP-TRUW-8.14.

3.8.8.1 For AK Sufficiency Determination Request, attach the required information (as described in Step 3.6.4).

3.8.9 If comments are received from CBFO, address the comments and resubmit the WSP package in accordance with MP-TRUW-8.14.

3.8.10 Complete a Form-1068 for the WSP package. The WSP package at a minimum includes, but is not limited to, the following:

- CBFO approval letter
- WSPF and CIS
- Acceptable Knowledge Summary report or AK Sufficiency Determination Request, if applicable
- WSPF transmittal letter.

3.9 Accuracy Assessments

NOTE 1: *The AKE assesses the accuracy of HWN and WMC assignments and radioisotopic content by acceptable knowledge. AK accuracy is assessed with IDCs grouped by Waste Stream Profile and with IDCs grouped by waste generator. These assessments are conducted and summarized in a letter on an annual basis. The assessments are based on reevaluation of AK necessitated by inconsistencies noted during the process of comparing AK information to characterization results. The assessments are organized by both WSP and generator. AK accuracy for WMC and HWN assignments is defined in MP-TRUW-8.2 as follows*:

- *"Accuracy is the degree of agreement between an observed sample result and the true value. The percentage of waste containers which require reassignment to a new WMC and/or designation of different hazardous waste numbers based on discrepancies identified by the Permittees during waste confirmation will be reported as a measure of AK accuracy."*

- *The accuracy of the radioisotopic content based on AK for each site is assessed in compliance with the WIPP WAC Section A.2.1 and the MP-TRUW-8.1 requirements to confirm existing AK data and to assess comparability on a waste stream basis.*

- *As a minimum, it is necessary to compare ratios of the two most prevalent radionuclides in the isotopic mix of containerized waste to confirm existing AK data.*

(MP-TRUW-8.1)

- *Additionally, comparison of measured data with AK provides a means to assess comparability for a waste stream.*

(MP-TRUW-8.1)

NOTE 2: *If additional or different hazardous constituents are identified during characterization, this is considered an AK inaccuracy.*

3.9.1 Document differences between EPA HWN identified by AK for each waste stream and those identified as required based on characterization data (RTR and VE).

3.9.2 Calculate the percent accuracy of HWN assignment as presented in Appendix G, Sample Formats for Accuracy Assessment.

NOTE: *A container identified during characterization activities that has the wrong IDC and wrong WMC or is assigned to a different waste stream profile based on an IDC change is considered an AK inaccuracy.*

3.9.3 Document differences between IDC/WMC assignments by AK and those identified based on characterization data.

NOTE: *The results in Step 3.9.3.1 are used to assess the accuracy of WMC assignment by AK. The resulting data are presented in the accuracy report.*

3.9.3.1 Obtain an accounting of all WMC reassignments and corresponding IDC changes recorded in WTS for the past year.

3.9.3.2 Calculate the percent accuracy as indicated in the Table G-2 footnotes presented in Appendix G.

3.9.4 Document differences between radionuclides identified for each waste stream based on AK and those measured during nondestructive assay as presented in Appendix G, Table G-3 and assessed for accuracy as follows:

NOTE: *An AK inaccuracy is either*:

A. An inconsistency between the mass fraction values for the principal radionuclides as measured and those determined from AK

OR

B. A detection or estimation (based on valid NDA data) of any of the ten WIPP-tracked nuclides (^{241}Am, ^{238}Pu, ^{239}Pu, ^{240}Pu, ^{242}Pu, ^{233}U, ^{234}U, ^{238}U, ^{90}Sr, and ^{137}Cs), or other significant radionuclides (i.e., one or more of the nuclides that contribute to 95% of the hazard for the container) not previously identified by AK.

3.9.4.1 Track and tabulate by IDC or waste stream any AKRs issued when additional radionuclides (not previously identified by AK) were detected during NDA and identified during SPM review.

3.9.4.1.1 Calculate the percent accuracy as presented in Appendix G.

3.9.4.1.2 Results of the radioisotope accuracy assessment should be used to update the radioisotopic default values.

NOTE: *Permittees perform confirmation of a representative subpopulation of the waste per the WIPP-WAP C7-1a. The discrepancies identified by the permittees during waste confirmation are reported as a measure of acceptable knowledge accuracy.*

3.9.5 Calculate the percent accuracy for WIPP-certified containers as presented in Appendix G.

3.10 Records Management

3.10.1 For AK Sufficiency Determination Request, attach the required information (as described in 3.6.4).

3.10.2 Revise all controlled documents using approved processes.

3.10.3 Maintain results of internal assessments or external audits of the AMWTP AK program as records and ensure they are available during CBFO audits.

4.0 DEFINITIONS

Acceptable knowledge. Any information about the process used to generate waste, material inputs to the process, and the time period during which the waste was generated, as well as data resulting from the analysis of waste, conducted prior to or separate from the waste certification process authorized by EPAs Certification Decision, to show compliance with Condition 3 of the certification decision (Appendix A of the 40 CFR 194). (Reference 40 CFR §194.2).

Acceptable Knowledge Resolution. The documented resolution of differences between AK documentation and characterization data (documented on Form-1070).

AK Source Document Reference List. Consist of a reference list of AK source documents (documented on Form-1084). Each source is assigned a unique identifier (alphanumeric) based on the AK source type. The following convention is used:

Correspondence (C001A or C001S, C002A, etc.)

Discrepancy report (D001A or D001S, D002A, etc.)

Published documentation (P001A or P001S, P002A, etc.)

Unpublished data (U001A or U001S, U002A, etc.).

Audit. A planned and documented independent assessment to determine by investigation, examination, or evaluation of objective evidence, the adequacy of, and compliance with, established procedures, instructions, drawings, and other applicable documents, and the effectiveness of implementation. An audit should not be confused with surveillance or inspection activities performed for the sole purpose of process control or product acceptance.

Correspondence. Correspondence consists of communication records relating to specific TRU waste streams or TRU waste management activities. Typically, this information consists of uncontrolled records of internal and external communications. Correspondence includes, but is not limited to, internal and external letters, memos, directives, telecommunications records, meeting minutes, personnel interview summaries, and record/document review summaries.

Data Quality Objectives. Qualitative and quantitative statements derived from the outputs of the first six steps of the DQO Process. DQOs clarify the study objective, define the most appropriate type of data to collect, determine the most appropriate conditions from which to collect the data, and specify tolerable limits for decision errors to be used as the basis for establishing the quantity and quality of data needed to support compliance decisions. DQOs are used to develop a scientific and resource-effective data collection design.

Discrepancy. A disagreement between AK sources. (Inconsistencies between AK and characterization analyses and observations performed during the AMWTP characterization processes are resolved using the AKR).

Discrepancy reports. The documented resolution of AK discrepancies between AK source documents is submitted on Form-1784.

Legacy Waste. Historically stored waste containers that comprise the 65,000 cubic meters of waste outlined in the agreement with the State of Idaho (i.e., the "Batt Agreement").

Newly generated. For purposes of AK waste stream delineation, AMWTP newly-generated waste includes waste that is generated as a result of repackaging, treatment (e.g., supercompaction), retrieval, characterization, and/or handling of retrieved or accessibly stored primary waste or as a result of conducting maintenance activities. Newly-generated waste is an overall term and includes newly-generated secondary waste as well as primary waste within an intact original container where historical information is inadequate and whose contents can only be verified by RTR/VE at the SCG level.

Published documentation. In general, published documents represent the most defensible, reviewed, and controlled sources of information. Published documentation includes, but is not limited to, controlled documents and databases, previously controlled documents and databases, procedures, reports, and studies. For the purposes of this program, published documents also include the AK reports, engineering design files (EDFs), AK summaries, WSPFs, nonconformance reports (NCRs), etc., developed for similar wastes at the generator site. When possible, CBFO-approved AK from other sites and programs are used to characterize the AMWTP waste inventories.

Quality Assurance Objectives. The characteristics of data that satisfy a given purpose or objective. The characteristics are accuracy, precision, completeness, comparability and representativeness.

Roadmap. The AK roadmap provides a cross reference between the mandatory programmatic and waste stream information with the AK source documents supporting these requirements. At the AMWTP, this is accomplished with Form-1084, Form-1066, and Form-1067.

Summary Category Groups relate to the final physical form of the waste. *Waste Matrix Code Groups* (WMCG; see def.) are categorized into three broad Summary Category Groups as follows:

S3000 - Homogeneous solids: Homogeneous solids are defined as solid materials, excluding soil, that do not meet the New Mexico Environment Department (NMED) criteria for classification as debris (20 NMAC 4.1.800 (incorporating 40 CFR 268.2[g] and [h])). Included in the series of homogeneous solids are inorganic process residues, inorganic sludges, organic sludges, salt waste, and pyrochemical salt waste. Other waste streams are included in this Summary Category Group based on the specific waste stream types and final waste form. This Summary Category Group is expected to contain toxic metals and spent solvents. This category includes wastes that are at least 50 percent by volume homogeneous solids.

S4000 - Soil/Gravel: This Summary Category Group includes S4000 waste streams that are at least 50 percent by volume soil/gravel. This Summary Category Group is expected to contain toxic metals.

S5000 - Debris Waste: This Summary Category Group includes heterogeneous waste that is at least 50 percent by volume materials that meet the criteria specified in 20 NMAC 4.1.800 (incorporating 40 CFR §268.2 [g]). Debris means solid material exceeding a 2.36 inch or 60 millimeter particle size that is intended for disposal and that is a manufactured object, plant or animal matter, or natural geologic material. Particles smaller than 2.36 inches in size may be considered debris if the debris is a manufactured object and if it is not a particle of S3000 or S4000 material.

Transuranic waste. Wastes contaminated with transuranic radionuclides present in concentrations greater than 100 nanocuries per gram of waste.

Unpublished data. Unpublished data consist of information that has typically not received peer review and may not have been formally controlled. In many cases, this information consists of the raw data used during the development of published documentation. Unpublished data includes, but is not limited to; draft documents, forms, analytical data packages, logbooks, and inventory lists, in addition to internal reports, studies, and databases.

Waste material parameters. Waste material parameters are listed in the WIPP-WAP as presented in the following table. The WIPP-WAP requires the generator/storage site to estimate the relative weight of the waste material parameters per unit of waste for each waste stream.

Waste Material Parameter	Description
Iron-based Metals/Alloys	Iron and steel alloys in the waste; does not include the waste container materials.
Aluminum-based Metals/Alloys	Aluminum or aluminum-based alloys in the waste materials.
Other Metals	All other metals found in the waste materials.
Other Inorganic Materials	Nonmetallic inorganic waste including concrete, glass, firebrick, ceramics, sand, and inorganic sorbents.
Cellulosics	Materials generally derived from high-polymer plant carbohydrates (e.g., paper, cardboard, wood, and cloth).
Rubber	Natural or man-made elastic latex materials; (e.g., surgeons' gloves and leaded rubber gloves).

Waste Material Parameter	Description
Plastics (waste materials)	Generally man-made materials often derived from petroleum feedstock; (e.g., polyethylene and polyvinyl chloride.
Organic Matrix	Cemented organic resins, solidified organic liquids and sludges.
Inorganic Matrix	Any homogeneous materials consisting of sludge or aqueous-based liquids that are solidified with cement, calcium silicate, or other solidification agents; (e.g., wastewater treatment sludge, cemented aqueous liquids, and inorganic particulates).
Soils/Gravel	Generally consists of naturally occurring soils that have been contaminated with inorganic waste materials.
Steel (packaging materials)	55-gal. (208-L) drums.
Plastic (packaging materials)	90-mil polyethylene drum liner and plastic bags.

Waste Matrix Code. The term WMC is used throughout the WIPP-WAP and pertains to a collection of descriptive titles, definitions, and associated numerical codes used to classify mixed waste at Department of Energy (DOE) facilities. WMCs (synonymous with matrix parameter categories) are defined in DOE/LLW-217, DOE Waste Treatability Group Guidance.

Waste Matrix Code Groups. WMCs are further categorized into the following broad WMCGs: solidified inorganics, solidified organics, salt waste, soils, lead/cadmium metal, inorganic nonmetal waste, combustible waste, graphite, filters, heterogeneous debris waste, and uncategorized metal. WMCGs are defined in Attachment B of the Waste Analysis Plan.

Waste stream. A waste stream is waste materials that have common physical form, that contain similar hazardous constituents, and that are generated from a single process or activity.

(MP-TRUW-8.2)

5.0 REFERENCES

(1) 40 CFR 194, Criteria for the Certification and Re-Certification of the Waste Isolation Pilot Plant's Compliance With the 40 CFR Part 191 Disposal Regulations

(2) 40 CFR 261, Identification and Listing of Hazardous Waste

(3) 40 CFR 268, Land Disposal Restrictions

(4) 20 NMAC 4.1.200, Adoption of 40 CFR Part 261

(5) 20 NMAC 4.1.800, Adoption of 40 CFR Part 268

(6) AMWTP-EDF-199, Advanced Mixed Waste Treatment Project Waste Stream, Rev 0, February 19, 2003 (P393A)

(7) CCP-PO-003, CCP Transuranic Authorized Methods for Payload Control (CCP CH-TRAMPAC)

(8) DOE/LLW-217, DOE Waste Treatability Group Guidance, T.D. Kirkpatrick, Rev. 0, January 1995 [P670A]

(9) INEL-95/0412, Waste Description Information for Transuranically-Contaminated Wastes Stored at the Idaho National Engineering Laboratory, B. D. Raivo, G. K. Becker, T. H. Smith, and G. L. Anderson, December 1995 (P365A)

(10) MP-DOCS-18.2, Records Management

(11) MP-DOCS-18.4, Document Control

(12) MP-TRUW-8.1, Certification Plan for INL Transuranic Waste

(13) MP-TRUW-8.2, Quality Assurance Project Plan

(14) MP-TRUW-8.9, Level II Data Validation

(15) MP-TRUW-8.11, Data Reconciliation

(16) MP-TRUW-8.14, Preparation of Waste Stream Profile Forms

(17) MP-TRUW-8.40, INL Waste Acceptance and Transfers

(18) MP-TRUW-8.41, Offsite Waste Acceptance

(19) RWMC-EDF-803, Chemical Constituents in Transuranic Storage Area (TSA) Waste

(20) RWMC-EDF-837, Estimated Earthen and Geofabric Covered TRU Waste Inventory in the TSA for Radioactive Waste Management Complex, J. R. Wixson, August 24, 1995 (P364A)

(21) RPT-TRUW-05, Waste Matrix Code Reference Manual

(22) RPT-TRUW-06, AMWTP AK for Newly Generated Waste

(23) RPT-TRUW-07, Determination of Radioisotopic Content in TRU Waste Based on Acceptable Knowledge

(24) RPT-TRUW-12, AMWTP Waste Stream Designations

6.0 RECORDS

Records generated by this procedure are classified and dispositioned as follows and in accordance with MP-DOCS-18.2, Records Management.

Record Description	Classification
MP-TRUW-8.13 Case File	Nonpermanent WIPP/ENV1-J-1/ Destroy 10 years after submittal
WSP package submitted using Form-1068	Lifetime WIPP/ENV1-J-1/Turn over to CBFO at end of project
Records generated per this procedure and procedure MP-TRUW-8.14 but are contained in WSP package for each CBFO approved waste stream include: • CBFO Approval Letter(s) • Change Notices (if applicable) • Completed Form-1195, Waste Stream Profile Form • Completed Form-1597, Reconciliation with Data Quality Objectives • Completed Form-1598, Characterization Information Summary Report • Copy of Acceptable Knowledge Summary Report • Completed Form-1187, Waste Stream Profile HWN Assignment Worksheet • Completed Form-1067, TRU Waste Stream AK Documentation Checklist • Completed Form-1777, Land Disposal Restriction Notification • WSPF Transmittal Letter	Lifetime WIPP/ENV1-J-1/Turn over to CBFO at end of project

Record Description	Classification
Form-1084, AK Source Document Reference List (completed Form-1084 submitted using Form-1068)	Lifetime WIPP/ENV1-J-1/Turn over to CBFO at end of project
Form-1066, TRU Waste Management AK Checklist (completed Form-1066 submitted using Form-1068)	Lifetime WIPP/ENV1-J-1/Turn over to CBFO at end of project
Form-1068, AK Source Document Review Summary (completed forms submitted with AK source documents, WSP package, and completed Forms listed in this section)	Lifetime WIPP/ENV1-J-1/Turn over to CBFO at end of project
Form-1069, AK Telecon/Interview Form (completed Form-1069 submitted using Form-1068)	Lifetime WIPP/ENV1-J-1/Turn over to CBFO at end of project
Form-1070, Acceptable Knowledge Resolution (AKR) Checklist	Lifetime WIPP/ENV1-J-1/Turn over to CBFO at end of project
Form-1784, Acceptable Knowledge Discrepancy Report (completed Form-1784 submitted using Form-1068)	Lifetime WIPP/ENV1-J-1/Turn over to CBFO at end of project
AK Resolution Ledger (copy submitted using Form-1068)	Lifetime WIPP/ENV1-J-1/Turn over to CBFO at end of project
Acceptable Knowledge Sufficiency Determination Requests	Lifetime WIPP/ENV1-J-1/Turn over to CBFO at end of project
Annual Evaluation of Acceptable Knowledge Accuracy (memo submitted using Form-1068)	Lifetime WIPP/ENV1-J-1/Turn over to CBFO at end of project
AK Document	Lifetime WIPP/ENV1-J-1/Turn over to CBFO at end of project

7.0 EXHIBITS

None

8.0 APPENDICES

Appendix A – General Overview of TRU Waste Characterization Data Processing and Reporting by SPO

Appendix B – AK Summary Report for a Waste Stream

Appendix C – AK Sufficiency Determination Request—AK Summary Report

Appendix D – AK Resolution Ledger

Appendix E – Guidelines for Common AK Discrepancies or Inconsistencies

Appendix F – AK Document

Appendix G – Sample Formats for Accuracy Assessment

AMWTP MANAGEMENT PROCEDURE		
MP-TRUW-8.13, Rev. 25	Issued: 08/13/13	Effective: 08/14/13

Collection, Review, and Management of Acceptable Knowledge Documentation

Appendix A – General Overview of TRU Waste Characterization Data Processing and Reporting by SPO

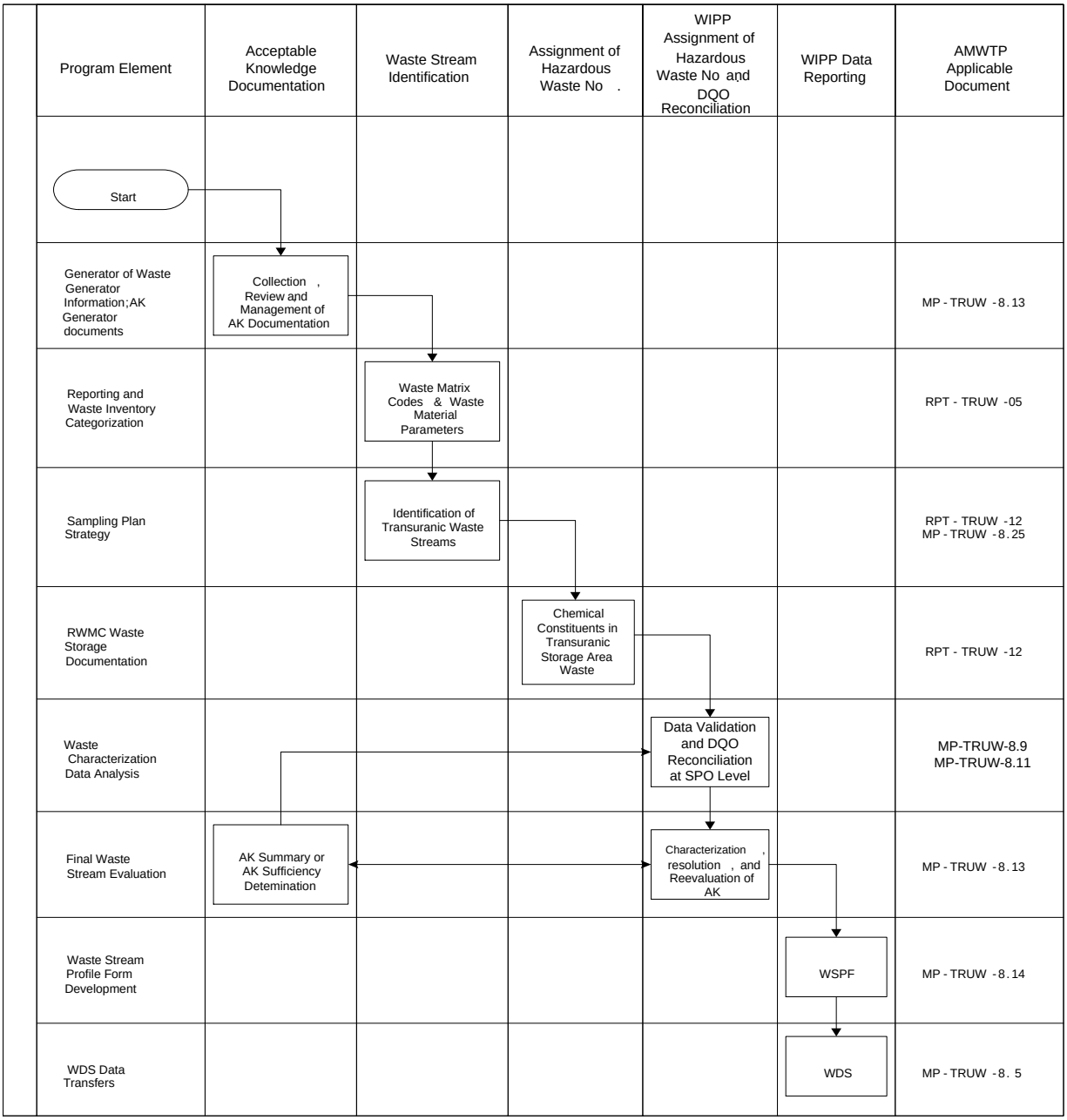

Appendix B –
AK Summary Report for a Waste Stream

An AK summary report is required to be included in the package presented to WIPP for approval of a WSPF. At a minimum, the WIPP-WAP requires the AK summary to include waste stream name, waste stream number, process and point of generation, waste stream volume, generation dates, TRUCON codes, Transuranic Waste Inventory Baseline Inventory Report (TWBIR)/Annual Transuranic Waste Inventory Report (ATWIR) information, Summary Category Group, WMCG, WMC, waste stream description, generating processes, RCRA determinations, and radionuclide information.

AMWTP produces an AK summary for each waste stream to be shipped to WIPP. At a minimum the AK summary includes the following information to meet technical requirements (Section 3.2).The section headers of the AK Summary do not need to match the outline.

I. Waste Stream Level Information

A. Waste Stream Number

B. Waste Stream Name

C. Physical Waste Form (Description of final physical waste form)

a) Summary Category Group

b) WMC Group

c) WMC

d) TRUCON Codes

e) TWBIR/ATWIR information (including TWBIR/ATWIR number(s) and stream description)

D. Point of Generation: (Buildings and/or areas from which waste was generated)

E. Waste Stream Volume – current and projected (estimated volume that AMWTP expects to characterize and ship for the waste stream, including estimate of percent ≤100 nCi/g if load management will be applied to the waste stream)

F. Time Period of Generation (For retrievably stored waste streams it is the time period the waste stream was generated. For newly-generated waste, it is the anticipated time period of generation)

G. Defense Determination (including a high level waste and spent nuclear fuel determination).

H. Waste Stream Description

I. Waste Generating Processes (For retrievably stored waste stream, summarize generating process or activity. For newly-generated waste stream include description of AMWTP process generating the waste stream)

J. Process Flow Diagrams (For retrievably stored waste stream, include references to applicable generator site flow diagrams, [e.g. applicable WSRIC document for RF waste]. For newly-generated waste stream include AMWTP process flow diagram)

K. Material Inputs (For retrievably stored waste stream, summarize inputs from applicable AK documents. For newly-generated waste stream, list all of the individual IDCs that will feed into the AMWTP waste stream.)

L. Identification of Waste Material Parameters and percent weight for the waste stream

M. For each waste stream, weight percent for each waste material parameter is estimated using historical waste generator, industry documentation, generator estimates, or characterization data.

N. Prohibited Items (include description of AMWTP controls that screen for prohibited items)

O. EPA Hazardous Waste Numbers RCRA Determination

a. List EPA Hazardous Waste Numbers assigned to waste stream

b. Provide a detailed hazardous waste determination including justification and rationale for the EPA HWN assignments. Include justification based on AK or testing that the waste does not exhibit the characteristics of ignitability, corrosivity, or reactivity.

c. Address whether P, U, and K listed codes apply to the waste stream including ^{134}U, will be included in the hazardous determination portion of the Waste Stream Profile Form

d. Discuss TSCA Related Contaminants if present

e. Discuss the presence or absence of beryllium

f. Discuss how the site has historically managed the waste, including the historical regulatory status of the waste (i.e., TRU mixed versus TRU non-mixed waste).

g. Discuss other related waste stream profiles and include explanation of any characterization differences.

NOTE: *Radiological composition of a waste stream based on AK information or direct measurement is documented either in the AK summary reports for the waste characterization of waste streams or in other controlled documents (e.g., technical justifications and RA SME reviews) to be developed as needed to address this issue and included in the AK record.*

P. Radionuclides (Description of anticipated radionuclides, radiological composition, and plutonium content for each waste stream based on AK information in the RPT-TRUW-07. Identify the two most prevalent radionuclides.

Appendix C – AK Sufficiency Determination Request—AK Summary Report

An AK summary report is required to be included in the package presented to WIPP with an AK Sufficiency Determination Request submittal. At a minimum the AK summary shall address the technical requirements included in the following outline.

AK Summary Report For an AK Sufficiency Determination Request

I. Executive Summary

Prepare an Executive Summary that briefly describes the waste stream, the type of AK Information available, whether AK alone can be used to meet the characterization requirements or if additional characterization is required, identify the scenario proposed.

II. Identify Purpose of AK Sufficiency Determination

A. Exempt from RTR

B. Exempt from VE.

III. Waste Stream Identification Summary

A. Include a demonstration that the waste stream has been properly delineated

B Meets the WIPP-WAP definition of waste stream.

IV. Mandatory Program Information

A. Facility location and description

B. Facility mission

C. Defense waste assessment

D. Spent nuclear fuel and high-level waste assessment

E. Description of waste generating processes, research/development [as necessary], facility support operations [as applicable]

F. Types and quantities of TRU waste generated, correlation of waste streams to buildings/processes, waste identification and categorization, physical form identifiers).

V. Mandatory Waste Stream Information

A. Area and Building of Generation

B. Waste stream volume/period of generation (including, for newly-generated waste, the rate and quantity of waste to be generated

C. Waste generating activities

D. Types of waste generated, material input related to physical form and identification of percentage of each waste material parameter in the waste stream

E. Chemical content information including hazardous constituents, hazardous waste identification

F. Prohibited item content (including documented evidence that the waste meets the WIPP TSDF-WAC Permit Conditions II.C.3.a-h)

G. Waste packaging, presence of filter vents, number of layers of confinement.

VI. Types of Additional Information Gathered

VII. Container-Specific Data (if available and relevant)

VIII. A Complete Reference List

Appendix D – AK Resolution Ledger

An example AK Resolution Ledger Report has been included in this appendix. Use of this ledger ensures that AK resolution checklists are assigned unique numbers and a method for keeping track of outstanding issues that need to be incorporated into AK documentation.

AK Resolution Number: Format is as follows:

AKR-YY-X

Where: "AKR" starts all AK resolution checklist numbers

YY are the last two digits of the calendar year of the date the discrepancy is initiated.

X is the next sequential number. Numbering starts with "1" and continues upward. The numbering **will not** start at one again at the beginning of the calendar year.

Date Initiated: the date that the issue is entered into the ledger and assigned the next number or revision.

Rev: revision number.

Rev. Date: date revision initiated.

Initiator: AKE initiating the AKR.

IDC: required field that should always include the generator along with the 3-digit IDC. In the case of an IDC change, initial IDC is used.

Waste Stream or Lot Number: optional, but should be included if a waste stream has been assigned. If the discrepancy is specific to a lot reconciliation issue, the lot number shall be indicated.

Description of Discrepancy: limited to a list of the most common types of discrepancies. (See Appendix E for more detail.)

Unexpected Materials

Unexpected Packaging

Radionuclides

IDC Change

HWN

Other.

Description of Resolution: Following items should be included if applicable:

Documents to be revised or NCR describing appropriate actions

All associated NCR numbers

Newly assigned IDCs.

Date Signed: Date that AK Resolution Checklist is signed.

Action Items:

Number of Action items listed on the AKR.

Number of Action items completed.

Date when all Action items have been completed.

AK Resolution Ledger

AKR Number	Date Initiated	Rev	Rev. Date	Initiator	IDC	Waste Stream or Lot	Description of Inconsistency	Description of Resolution	Date Signed	# AIs	# AIs done	All AIs done
AKR-05-258	10/15/2005			V. Sendelweck	MD-IDC 804	BN510	Unexpected materials	Change IDC to MD802	10/20/2005	0	0	
AKR-05-259	11/12/2005			C. Abbott	RF-IDC 480	BN510	IDC change	Change IDC from 374 to 480	11/15/2005	2	2	01/05/06
AKR-05-260	12/30/2005	1	01/20/2006	C. Abbott	BN-IDC 510	BN510	Radionuclide	Use as is. No impact to WMC or HWN	05/11/2005	5	5	02/10/06
AKR-06-261	01/10/2006			V. Sendelweck	RF-IDC 372	BN161	HWN	WMC change to S5123, HWN D007 added	01/10/2006	5	4	
AKR-06-262	01/20/2006			C. Abbott	BN-IDC 510	Recon lot BN510.21	Other	Isopropyl alcohol detected >25% of lot	02/05/2006	0	0	
AKR-06-263	03/10/2006			C. Abbott	MD-IDC 836		Unexpected packaging	Drum bag identified during RTR	03/12/2006	2		

EXAMPLE ONLY

Appendix E – Guidelines for Common AK Discrepancies or Inconsistencies

The following table provides some guidelines for determining appropriate actions to take for the most commonly encountered AK discrepancies or inconsistency.

Description of Discrepancy or Inconsistency	Suggested Actions
Unexpected Materials	This inconsistency includes any materials identified by RTR or visual not included in the descriptions or material lists in the AK summary or AK documents. RPT-TRUW-05 and RPT-TRUW-06 are updated with the new information. Where possible, update to include entire class of materials instead of specific objects. For example, if a wrench is identified in an IDC that did not include metals in its description, update to indicate that metal may be seen. Do not update to indicate that waste may contain wrenches.
Unexpected Packaging	This category includes any unexpected packaging configurations. (Different number of layers than expected, absorbent not as described by AK, packaging materials not described by AK, etc.) This may require an update to the applicable AK document.
Radionuclides	This refers to unexpected radionuclides or unexpected ratios of isotopes being detected in a waste stream. All containers are measured, so typically this may require a revision to the AK summary or RPT-TRUW-07, and involve coordination with physics personnel to resolve issue.
WMC Change	NCRs are issued when a change in generator assigned IDC and WMC or IDC and waste stream is required. A change to AK documents may be required if unexpected materials or packaging are identified. If the container cannot be reassigned to the recommended IDC/WMC based on HWNs, an additional NCR will be generated to address the HWN issue. Temporary or container type only IDC changes may not require an NCR or AKR for an IDC or WMC change.

Description of Discrepancy or Inconsistency	Suggested Actions
HWN	Some HWN evaluations result in the conclusion that no additional HWNs are needed. In this case neither an AKR nor NCR is required and no further action is necessary. If the evaluation indicates that a HWN needs to be added to an approved WSPF, an AKR and NCR will need to be issued. If the evaluation indicates that a HWN needs to be added to a WSPF that has not been approved, an AKR will need to be issued but an NCR is not required. If the evaluation indicates that a HWN will be conservatively added to a WSPF that has not been approved, neither an AKR nor NCR is required. Possible actions to close the AKR or NCR include: • Treat the container of waste to remove the hazardous constituent • Suspend shipment of remaining containers of the waste if the HWN affects all containers within the waste stream. • Confirm that the HWN to be added is included on the AMWTP HWMA/RCRA permits. • Create new waste stream, revise RPT-TRUW-12 as necessary, and assign container(s) to new waste stream. (A new WSPF and AK summary would not have to be created to close NCR, but would be required before containers could be shipped).
Unknown/Undefined IDC	Containers identified as unknown/undefined and assigned IDCs UN-000, PC-000, UN-00A, UN-00B, UN-00C, UN-00D are managed as described in RPT-TRUW-12, RPT-TRUW-06, and RPT-TRUW-05.
Other	Work through resolution based on requirements and severity of discrepancy.

Appendix F – AK Document

An AK document is prepared for each generator site per Section 3.3. At a minimum, this document and the associated AK summary report(s) address the WIPP-WAP required information for each waste stream.

NOTE: *An AK document for offsite generated waste may include PK provided by CCP.*

AK Document

I. Executive Summary

II. Introduction

III. Requirements

IV. Waste Management Level Information

A. Facility mission description (including map of site)

1. Defense determination(including a high-level waste and spent nuclear fuel determination)

B. Description of operations that generated the waste

C. TRU waste management (including waste identification or categorization scheme)

D. Waste certification procedures (including generator site procedures, if available)

E. TRU waste inventory (types and quantities, may be included in sections specific to the waste)

F. Correlation of waste generated (e.g., waste groupings presented in the sections specific to the waste).

V. Waste Stream (Group) Level Information

NOTE 1: *A section is prepared for each waste group as described below.*

NOTE 2: *The following waste stream information may be addressed for each waste group in the AK document; however, the mandatory waste stream information must be addressed in the AK Summary Report when a waste stream is developed. For example, if the waste volume or hazardous waste determination is not determined at the time the document is written, the data are compiled and included in the AK summary report prior to completion of the applicable waste stream profile.*

A. Waste description (including physical form and time period of generation)

B. Waste generation

1. Areas and/or buildings from which the waste was generated

2. Process flow diagrams (may be reference to document)

3. Material inputs or other information that identifies the chemical content of the waste stream and the physical form

4. Waste Volume.

C. Waste packaging

D. Waste characterization based on AK (material inputs or historical management)

1. Identification of EPA Hazardous Waste Numbers, if applicable.

2. Identification of radionuclides (may be included in the general sections describing the facility)

3. Identification of prohibited items (may be included in the general sections describing the facility)

4. Identification of PCBs, if applicable.

VI. References

None

Appendix G – Sample Formats for Accuracy Assessment

Table G-1. Accuracy of AK HWN Assignment based on Characterization Results.

WSP Number [a]	AK-Assigned HWNs [b]	Characterization-Assigned HWNs [c]	HWN Difference [d]	HWNs in WSPF [e]	Validated Containers [f]	%Accuracy [g]
Totals					[h]	
Overall HWN assignment % accuracy						[i]

a. Enter each approved WSP number.

b. Enter the HWNs assigned by AK. Use Waste Stream Profile HWN Assignment Worksheet, AMWTP Form-1187 as source.

c. Enter the HWNs assigned based only on characterization results (WSPF).

d. Enter the absolute number of different HWNs identified between columns b and c.

e. Enter the total number of HWNs that were assigned in the WSPF.

f. Enter the number of containers that have been reconciled for the waste stream. (Have DQO reconciliation signature).

g. Calculate the Waste Stream Accuracy as:

$$\left(1-\left(\frac{HWN\,Difference}{\#HWNsWSPF}\right)\right)\times 100\%$$

h. Calculate the total number of containers reconciled by summing all the waste stream values.

i. Calculate an overall percent accuracy as:

$$\frac{(Acc_1 \times N_1)+(Acc_2 \times N_2)\ldots+(Acc_n \times N_2)}{T}\times 100\%$$

Where:

Acc_1 = The percent accuracy for WSP_1

N_1 = The total number of validated containers in WSP_1

T = The total number of validated containers in all WSPs

Table G-2. Accuracy of AK WMC Assignment.

WSP Number [a]	IDC [b]	WMC [b]	Validated Containers Examined [c]	AKRs No.(s) [d]	IDC Changed Containers [e]	IDC % Accuracy [f]	WMC/WS Changed Containers [e]	WMC/WS % Accuracy [g]
Totals					[h]		[h]	
Overall percent accuracy for WMC assignment								[i]

a. Enter each WSP number.

b. Enter original IDC and WMCs.

c. Enter total number of validated containers examined to date based on WSP SPM RTR date, etc.

d. Enter the AKRs referenced.

e. Enter number of containers affected by IDC or WMC/WS change as listed on the AKRs.

f. Calculate the percent of IDC changes as the number of containers affected by the IDC changes divided by the number of validated containers examined.

g. Calculate the percent of WMC/WS changes as the number of containers affected by WMC/WS changes divided by the number of validated containers examined.

h. Sum the columns for number of validated containers and number of containers affected by IDC and WMC/WS changes.

i. Calculate overall percent accuracy for WMC/WS assignment:

$$\frac{Total\#of\ containers validated - total\ WMC/WS\ changes}{Total containers validated} \times 100\%$$

Table G-3. Accuracy of AK Radioisotopic Content

WSP Number [a]	IDC [b]	SPM-Validated Containers [c]	AKR Number [d]	Containers affected by AKR [e]	% Accuracy [f]
Totals		[g]		[g]	
Overall percent accuracy for radionuclide content					[h]

a. Enter each approved WSP number.

b. Enter each IDC number.

c. Enter the total number of validated WIPP acceptable containers based on SPM assay data for each IDC (and where applicable, WSP).

d. For each IDC, enter the AKR numbers(s) associated with additional radionuclides detected.

e. For each IDC, enter the number of containers included in an AKR for additional radionuclides (not identified in AK) detected.

f. Calculate the radionuclide content accuracy for each IDC as:

$$\frac{Total\#of\ containers validated - total\#radionuclide changes}{Total containers validated} \times 100\%$$

g. Sum columns c and e.

h. Calculate the overall percent accuracy as:

$$\frac{(Acc_1 \times N_1) + (Acc_2 \times N_2) ... + (Acc_n \times N_2)}{T} \times 100\%$$

Where:

Acc_1 = The percent accuracy for IDC_1

N_1 = The total number of validated containers in IDC_1

T = The total number of validated containers in all IDCs

Table G-4. AMWTP accuracy for WIPP-certified containers

WSP Number [a]	Certified Containers [b]	Confirmation-Failed Containers [c]	Confirmation % Accuracy [d]
Totals	**(e)**	**(e)**	
Overall percent accuracy for WIPP-certified containers			(f)

a. Enter each approved WSP number.

b. Enter the number of certified containers identified for AMWTP shipment to WIPP during the reporting period.

c. Enter the total number of containers that were rejected by the WIPP RTR/VE confirmation team.

d. Calculate the WIPP certification accuracy for each WSP as:

$$\frac{Total\#of\ containers certified - total\#\ failed containers}{Total containers certified} \times 100\%$$

e. Sum columns b and c.

f. Calculate the overall percent accuracy as:

$$\frac{(Acc_1 \times N_1) + (Acc_2 \times N_2) \ldots + (Acc_n \times N_2)}{T} \times 100\%$$

Where:
Acc_1 = The percent accuracy for WSP
N_1 = The total number of validated containers in WSP_1
T = The total number of validated containers in all WSPs

Preparation of Waste Stream Profile Forms

Advanced Mixed Waste Treatment Project

Approval:

(*Signature on file. See DCR-12649.*) 09/03/13

Date

REVISION LOG

Revision Number	Date Approved	Pages Affected	Description of Revision
0	07/09/02	All	Initial issue. DCR-2002-1268
1	3/28/02	All	DCR-2163: Changed effective date from "When DOE Approves Retrieval Operations" to March 28, 2003.
2	05/01/03	Various	DCR-2198: Response to CBFO comments
3	08/19/04	Various	DCR-3208: Revised Steps 4.1.1 and 4.1.2 to incorporate corrective actions from CAR 8217 (CBFO CAR 04-033 Revision 1). Corrected references and minor editorial corrections.
4	11/30/04	Various	DCR-3310: Revised to incorporate CBFO Post-Audit comments. Made editorial/format changes to comply with MP-DOCS-18.3 and 18.4.
5	1/25/06		DCR-4742: Revised steps 3.1.10 and 3.1.12 to clarify when transmittal letter issued. Updated Reference (13) to match Section 4.0. Corrected references and minor editorial changes.
6	06/29/06	Pages, 1, 3, and 4; Various	DCR-5023: Correct spelling on page 1. Changed line heading on page 3, section 3.1.3.6 to correlate with Form-1598, and added website for clarification on CBFO transmittal in section 3.1.10; updated to comply with Form-1728, Document and Case File QC Checklist.
7	1/05/07	Various	DCR-5473. Eliminate SPQAO function from Roles and Responsibilities and as referenced throughout the procedure. Add additional responsibilities to SPM process. Other changes in accordance with the implementation of the Waste Isolation Pilot Plant Hazardous Waste Facility Permit requirements resulting from the Section 311/Remote-Handled (RH) Permit Modification Request (PMR).
8	11/05/07	All	DCR-6413. General Clarifications; Periodic Review.
9	08/04/08	Step 3.1.9 and Ref. 6	DCR-7403. Replace MP-TRUW-8.16 with MP-TRUW-8.5.

AMWTP MANAGEMENT PROCEDURE		
MP-TRUW-8.14, Rev. 15	Issued: 09/03/13	Effective: 09/04/13

Preparation of Waste Stream Profile Forms

Revision Number	Date Approved	Pages Affected	Description of Revision
10	07/14/09	Various	DCR-8422. Periodic Review. Add change notice instructions. Minor editorial corrections.
11	05/18/10	Step 3.1.6.1	DCR-9226. Inserted step to address new requirement from Section B3-12b(2) of WIPP Hazardous Waste Permit as a result of the permit modification.
12	12/15/10	Various	DCR-9637. Revised Sections 3.1, 3.3, and 4.0 to incorporate WIPP WAP permit renewal changes. Updated Section 4.0 to reflect forms included in WSP package submittals. Also made editorial changes.
13	10/08/12	Cover page	DCR-11682. Applied ITG-BLUESHEET-073. Updated document owner and title.
14	06/07/13	Various	DCR-12212. Changes made per WIPP PMR to eliminate sampling (HGAS/Sampling).
15	09/03/13	Various	DCR-12649. Changed roles and responsibilities to reflect current roles and responsibilities. Corrected record requirements to reflect the document requirements that apply to this procedure.

TABLE OF CONTENTS

1.0 PURPOSE/SCOPE 1

2.0 ROLES AND RESPONSIBILITIES 1

3.0 PROCEDURE 1

3.1 Prepare Waste Stream Profile Package 1

3.2 Prepare Waste Stream Characterization Package 3

3.3 Prepare Waste Stream Profile Package Modification 4

4.0 DEFINITIONS 4

5.0 REFERENCES 5

6.0 RECORDS 6

7.0 EXHIBITS 6

8.0 APPENDICES 6

AMWTP MANAGEMENT PROCEDURE		
MP-TRUW-8.14, Rev. 15	Issued: 09/03/13	Effective: 09/04/13

Preparation of Waste Stream Profile Forms

1.0 PURPOSE/SCOPE

The purpose of this procedure is to provide the policy and procedures for preparation of *waste stream* (see def.) profile forms (WSPFs), the Characterization Information Summary (CIS) Report, and the Waste Characterization Package at the Advanced Waste Mixed Waste Treatment Project (AMWTP) in accordance with MP-TRUW-8.2, Quality Assurance Project Plan. Preparation of *acceptable knowledge* (AK; see def.) summaries is described in MP-TRUW-8.13, Collection, Review, and Management of Acceptable Knowledge Documentation. This procedure may also be used to complete the applicable forms for preparing testing data reports for waste stream *lots* (see def.) and for preparing applicable forms for reconciliation lots.

2.0 ROLES AND RESPONSIBILITIES

Performer	Responsibilities
TRU Programs Manager (TPM) or Designee	• Verifies data, reviews documents, provides signature confirmation, provides notifications, and transmits documents to the Carlsbad Field Office (CBFO).
Site Project Manager (SPM)/ Acceptable Knowledge Expert (AKE)	• Prepares and reviews AK summaries, WSPFs, completes forms referenced in this procedure.

3.0 PROCEDURE

NOTE 1: *TPM tasks may be performed by a qualified SPM or AKE designee.*

NOTE 2: *The forms referenced in this procedure are to be used as approved; however, additional lines may be added to accommodate additional analysis, as necessary.*

3.1 Prepare Waste Stream Profile Package

3.1.1 SPM/AKE: Verify that data for a sufficient number of containers for the waste stream have been validated and reconciled in accordance with MP-TRUW-8.11, Data Reconciliation.

NOTE: *Form-1598, Characterization Information Summary Report, is attached to Form-1195, Waste Stream Profile Form, for initial waste stream characterization.*

3.1.2 SPM/AKE: Prepare Form-1598 and ensure that the appropriate tables are completed to present debris (S5000), homogenous solids (S3000), or soil/gravel (S4000) lot characterization data in accordance with MP-TRUW-8.11.

3.1.2.1 In Table 1, Correlation of Container Identification Numbers to Data Package, of Form-1598, provide a complete listing of all container identification numbers used, cross-referenced to each batch data report (BDR).

3.1.2.2 In Table 2, RTR/VE Summary of Prohibited Items, of Form-1598, provide the *real-time radiography* (RTR; see def.) and *visual examination* (VE; see def.) summary to document that all prohibited items are absent in the waste.

3.1.3 SPM/AKE: Prepare Form-1597, Reconciliation with Data Quality Objectives, in accordance with MP-TRUW-8.11, to attach to Form-1598.

3.1.4 AKE: If the data are for an initial waste stream, then prepare an AK summary for the waste stream profile (WSP) or an AK summary for a sufficiency determination request in accordance with MP-TRUW-8.13.

3.1.5 AKE: If the data are for an initial waste stream, then prepare Form-1195 in accordance with the instructions attached to the form.

3.1.5.1 AKE: Include in the CIS Report, a justification for the selection of radiography and/or visual examination (VE) as an appropriate method of characterizing the waste included in the waste stream.

3.1.6 TPM or Designee: Review the forms and reports generated that are associated with a WSPF, a CIS Report, and an AK summary to ensure adequacy and completeness.

3.1.7 TPM or Designee: Notify the Waste Isolation Pilot Plant (WIPP) Waste Data System (WDS) administrator that a new WSPF or CIS report is to be submitted.

3.1.8 WCO or Designee: Transmit drum specific information for waste stream profile in accordance with MP-TRUW-8.5, TRU Waste Certification.

3.1.9 TPM or Designee: Transmit a copy of WSPF, CIS Report, and AK summary to CBFO for review via e-mail at site.docs@wipp.ws.

3.1.10 AKE: Incorporate changes to a finalized WSPF, CIS Report, or AK summary based on CBFO review, as applicable.

3.1.11 TPM or Designee: Transmit a finalized copy of WSPF, CIS Report, or AK summary to CBFO.

NOTE: *All WSPF documents (WSPF, CIS report, or AK summary) must be approved before shipping can be planned.*

3.1.12 TPM or Designee: Upon receiving notification that a WSPF, CIS Report, or AK summary has been approved by CBFO, notify SPM, AKE, and AMWTP Operations.

3.1.13 SPM/AKE: Complete Form-1777, Land Disposal Restriction Verification.

3.1.13.1 Ensure Form-1777 is available to shipping representative.

3.1.14 AKE: Prepare and submit the WSP package to Records Management in accordance with MP-TRUW-8.13.

3.2 Prepare Waste Stream Characterization Package

3.2.1 TPM or Designee: Ensure additional or detailed information is provided at the request of CBFO, prepared as a Waste Stream Characterization Package.

NOTE: *A Waste Stream Characterization Package consists of the following information:*

- *Form-1195, Waste Stream Profile Form*
- *Forms-1597 and -1598 (see WIPP-WAP)*
- *Complete AK summary (see WIPP-WAP)*
- *BDRs augmenting the AK documentation and any others requested by CBFO. At a minimum, compile the data packages listed on Form-1598.*
- *Raw testing data requested by CBFO.*

3.2.2 TPM or Designee: Transmit Waste Stream Characterization Package via formal transmittal letter.

3.3 Prepare Waste Stream Profile Package Modification

3.3.1 SPM/AKE If the WSP package must be revised, then perform the following evaluations:

3.3.1.1 If the change does not result in the addition of EPA HWNs or a change to the *Waste Matrix Code* (see def.) but does affect Form-1195 or Form-1598, then a change notice (CN) is required.

3.3.1.2 If the change does not result in the addition of EPA HWNs or a change to the Waste Matrix Code and does not affect Form-1195 or Form-1598 but does affect the AK summary, then a revised AK summary is required.

3.3.1.3 If the change results in the addition of EPA HWNs or a change to the Waste Matrix Code, then:

3.3.1.3.1 Document the criteria used to determine the specific circumstances under which a waste stream profile package is revised versus when a new waste stream profile package is required.

3.3.1.3.2 Prepare a new waste stream profile package or revision to the existing waste stream profile package as required.

3.3.2 TPM or Designee: Review, approve, and submit the applicable documents to CBFO in accordance with the applicable steps in Section 3.1.

4.0 DEFINITIONS

Acceptable knowledge. Any information about the process used to generate waste, material inputs to the process, and the time period during which the waste was generated, as well as data resulting from the analysis of waste, conducted prior to or separate from the waste certification process authorized by EPAs Certification Decision, to show compliance with Condition 3 of the certification decision (Appendix A of the 40 CFR 194).

(Reference 40 CFR §194.2)

Lot. An initial waste stream lot for profiling or a reconciliation lot.

Real-time radiography. A radiographic method that allows simultaneous remote imaging for the viewing of waste package contents.

Visual examination. A characterization method that involves opening a container and physically examining its contents.

Waste Matrix Code. The term Waste Matrix Code is used throughout the WIPP Waste Analysis Plan (WAP) and pertains to collection of descriptive titles, definitions, and associated numerical codes used to classify mixed waste at Department of Energy facilities. Waste Matrix Codes (synonymous with matrix parameter categories) are defined in DOE/LLW-217, DOE Waste Treatability Group Guidance.

Waste stream. Waste materials that have common physical form, that contain similar hazardous constituents, and that are generated from a single process or activity.

5.0 REFERENCES

(1) 40 CFR 194, Criteria for the Certification and Recertification of the Waste Isolation Pilot Plant's Compliance with the 40 CFR 191, Disposal Regulations

(2) DOE/LLW-217, DOE Waste Treatability Group Guidance, T.D. Kirkpatrick, Prepared for DOE Idaho Operations Office, Rev. 0, January 1995 [P670A]

(3) MP-DOCS-18.2, Records Management

(4) MP-TRUW-8.2, Quality Assurance Project Plan

(5) MP-TRUW-8.5, TRU Waste Certification

(6) MP-TRUW-8.11, Data Reconciliation

(7) MP-TRUW-8.13, Collection, Review, and Management of Acceptable Knowledge Documentation

(8) NM4890139088-TSDF, Waste Isolation Pilot Plant Hazardous Waste Facility Permit, New Mexico Environment Department, Santa Fe, New Mexico

(9) RPT-TRUW-12, AMWTP Waste Stream Designations

6.0 RECORDS

Records generated by this procedure are classified in accordance with the table below and dispositioned in accordance with MP-DOCS-18.2, Records Management.

Record Description	Classification
MP-TRUW-8.14, Case File	Nonpermanent WIPP/ENVI-J-1/ Destroy 75 years after submittal
WSP package submitted using Form-1068, AK Source Document Review Summary	Lifetime WIPP/ENV1-J-1/Turn over to CBFO at end of project
The following records generated by this procedure are contained in the WIPP WSP package for each CBFO-approved WIPP waste stream: • CBFO Approval Letter(s) • Change Notices (if applicable) • Completed Form-1195, Waste Stream Profile Form • Completed Form-1597, Reconciliation with Data Quality Objectives • Completed Form-1598, Characterization Information Summary Report • Copy of Acceptable Knowledge Summary Report • Completed Form-1777, Land Disposal Restriction Notification • WSPF Transmittal Letter	Lifetime WIPP/ENV1-J-1/Turn over to CBFO at end of project
Waste Stream Characterization Package (when applicable)	Nonpermanent WIPP/ENVI-J-1/ Destroy 75 years after submittal

7.0 EXHIBITS

None

8.0 APPENDICES

None

Reports to Management

Advanced Mixed Waste Treatment Project

Approval:

(*Signature on File.* DCR-11931) 12/06/12

Date

AMWTP MANAGEMENT PROCEDURE		
MP-TRUW-8.26, Rev. 6	Issued: 12/10/12	Effective: 12/11/12
Reports to Management		

REVISION LOG

Revision Number	Date Approved	Pages Affected	Description of Revision
0	8/15/02	All	Initial issue. DCR-2002-1364
1	03/28/03	All	DCR 2163: Change effective date from "When DOE Approved Retrieval Operations" to March 28, 2003.
2	04/08/03	 P.9 P.9 P.10 P.11	DCR-2180. Incorporate CBFO comments: 1. Corrected editorial error in "Note;" 2. Added sentence to Section 4.4.3.2, to identify minimum miscertification rate; 3. Added new Section 4.6.2 to clarify surveillance reporting requirements. Corrected "Records" section.
3	01/19/04	P.9	DCR-2598: Incorporate an inconsistency between the two procedures pointed out by CBFO.
4	02/14/06	All	DCR-4772. Completed periodic review. Updated formatting and revised to MP-DOCS-18.3, Developing Management Procedures, and MP-DOCS-18.4, Document Control.
5	1/05/07	All	DCR-5482. Complete rewrite in accordance with the implementation of the Waste Isolation Pilot Plant Hazardous Waste Facility Permit requirements resulting from the Section 311/Remote-Handled (RH) Permit Modification Request (PMR).
6	12/10/12	All	DCR-11931. Incorporated ITG-BLUESHEET-080, where applicable.

TABLE OF CONTENTS

1.0 PURPOSE/SCOPE 1

2.0 ROLES AND RESPONSIBLITIES 1

3.0 PROCEDURE 2

3.1 Semi-Annual Quality Assurance Report Preparation and Distribution 2

3.2 Independent Assessments and Surveillances 3

4.0 DEFINITIONS 3

5.0 REFERENCES 3

6.0 RECORDS 4

7.0 EXHIBITS 4

8.0 APPENDICES 4

AMWTP MANAGEMENT PROCEDURE		
MP-TRUW-8.26, Rev. 6	Issued: 12/10/12	Effective: 12/11/12
Reports to Management		

1.0 PURPOSE/SCOPE

This procedure describes the process for developing and distributing required reports on the status of the Transuranic (TRU) Waste Program at the Advanced Mixed Waste Treatment Project (AMWTP) at the Idaho National Laboratory (INL) in accordance with MP-TRUW-8.1, Certification Plan for INL Transuranic Waste, and MP-TRUW-8.2, Quality Assurance Project Plan.

This procedure is limited specifically to reporting of quality-affecting activities conducted by the TRU Waste Program. This procedure applies to AMWTP management and staff who prepare, transmit, and retain Quality Assurance (QA) reports.

2.0 ROLES AND RESPONSIBLITIES

Performer	Responsibilities
Quality Assurance Representative	• Issues a semi-annual QA report. • Assesses the effectiveness of the TRU Waste QA Program. • Laboratory/testing facility assessment • Nonconformance Tracking • Corrective Action Verification • Ensures that QA plans and procedures implement the requirements of the Carlsbad Field Office (CBFO) Quality Assurance Program Document (QAPD).
Site Project Manager (SPM) or Designee	• Reviews and comments on the Semi-annual QA report. • Forwards a copy of the Semi-annual QA Report with comments, if applicable, to DOE-ID and the AMWTP General Manager.

3.0 PROCEDURE

3.1 Semi-Annual Quality Assurance Report Preparation and Distribution

3.1.1 Quality Assurance Representative: Issue a semi-annual report that summarizes all relevant information on the QA/quality control (QC) activities for the reporting period and submit it to the SPM in accordance with MP-TRUW-8.1.

NOTE: *The QA report will include, as appropriate, the following information*:

A. Any changes to the QAPjP (MP-TRUW-8.2)

B. Identification of any significant QA/QC problems, recommended solutions, and corrective actions

C. An assessment of QC data collected during the period, including the frequency of repeated analyses, reasons for those repeats, and corrective actions

D. Discussions of whether Quality Assurance Objectives (QAOs) have been met, and any resulting impact on decision making

E. Limitations on the use of measurement data

F. Status of Performance Demonstration Program (PDP) results

G. Results of audits and surveillances conducted during the period

H. Nonconformance report (NCR) status

I. Trend analysis information.

3.1.2 SPM: Review the report and comment, if appropriate.

3.1.3 SPM: Forward a copy of the report with comments, if applicable, to DOE-ID and the AMWTP General Manager.

3.1.4 SPM: Forward the original report with comments to AMWTP Document Control.

3.2 Independent Assessments and Surveillances

3.2.1 QA: Determine the effectiveness of the TRU Waste Program Quality Assurance Program, which is accomplished through internal reporting procedures, assessments, and surveillances performed in accordance with MP-M&IA-17.2, Independent Assessments, and MP-M&IA-17.3, Surveillances.

3.2.2 QA: Ensure that assessments and surveillances are planned, performed, documented, and reported to appropriate management personnel.

3.2.3 QA: Ensure that the Acceptable Knowledge process is consistently applied and waste stream documentation is evaluated through internal AMWTP assessments.

3.2.4 QA: Ensure that characterization facilities and analytical laboratories are assessed per MP-TRUW-8.2.

4.0 DEFINITIONS

None

5.0 REFERENCES

(1) DOE/CBFO-94-1012, Quality Assurance Program Document

(2) MP-DOCS-18.2, Records Management

(3) MP-M&IA, 17.2, Independent Assessments

(4) MP-M&IA-17.3, Surveillances

(5) MP-TRUW-8.1, Certification Plan for INL Transuranic Waste

(6) MP-TRUW-8.2, Quality Assurance Project Plan

6.0 RECORDS

Records generated by this procedure shall be classified in accordance with the table below and dispositioned in accordance with MP-DOCS-18.2, Records Management.

Record Description	Classification
MP-TRUW-8.26, Case File	Nonpermanent WIPP/ENV1-J-1/Destroy 10 years after submittal
Semi-annual Quality Assurance Report to Management	FOR/ Nonpermanent WIPP/ENV2-a-1-a/Destroy 5 years after Life of facility

7.0 EXHIBITS

None

8.0 APPENDICES

None

List of Processes and Equipment Evaluated

WIPP #	Process/Equipment Description	Applicable to the Following Waste Streams/Groups of Waste Streams	Currently Approved by NMED	Currently Approved by EPA
NEW PROCESSES OR EQUIPMENT				
NONE				
APPROVED PROCESSES OR EQUIPMENT				
The following processes and equipment were evaluated during Audit A-15-01				
Nondestructive Examination (NDE)				
9RR1	Procedure – INST-OI-12 Description – Real-Time Radiography System Z-213-101	Solids (S3000) Debris (S5000)	YES	YES
9RR2	Procedure – INST-OI-12 Description – Real-Time Radiography System Z-213-106	Solids (S3000) Debris (S5000)	YES	YES
9RR3	Procedure – INST-OI-12 Description – Real-Time Radiography System RTR-1001	Solids (S3000) Debris (S5000)	YES	YES
Visual Examination				
9VE2	Visual Examination Procedure – INST-OI-34 Description – Visual Examination (in lieu of RTR) (VEC)	Solids (S3000) Debris (S5000)	YES	YES
9VE3	Visual Examination Procedure – INST-OI-34 Description – Newly Generated Waste Visual Examination Closure (VNC)	Solids (S3000) Debris (S5000)	YES	YES
9VE5	Visual Examination Procedure – INST-FOI-17 Description –Visual Examination (in lieu of RTR) (VEC)	Debris (S5000)	YES	YES

List of Processes and Equipment Evaluated

WIPP #	Process/Equipment Description	Applicable to the Following Waste Streams/Groups of Waste Streams	Currently Approved by NMED	Currently Approved by EPA
9VE6	Visual Examination Procedure – INST-FOI-17 Description – Newly Generated Waste Visual Examination Closure (VNC)	Debris (S5000)	YES	YES
9VE7	Visual Examination Procedure – INST-FOI-17 Description – Box Line Visual Examination (VEB) – Box to drum repackaging	Debris (S5000)	YES	YES
9VE8	Visual Examination Procedure – INST-FOI-17 Description – Box Line Visual Examination (VEB) – Drum to new drum repackaging	Debris (S5000)	YES	YES
9VE10	Visual Examination Procedure – INST-OI-34 Description – Box Line Visual Examination (VEB) – Drum to new drum repackaging	Solids (S3000) Debris (S5000)	YES	YES

DEACTIVATED PROCESSES OR EQUIPMENT

No processes or equipment have been deactivated since the previous Audit A-14-01.

Procedure Revision Matrix

No.	Procedure Number	Procedure Title	Rev. During Last Annual Audit	Rev. During Current Annual Audit	Brief Description of Procedure Changes
Quality and Safety Improvement					
1	MP-Q&SI-5.1	Investigation and Root Cause Analysis	Rev. 9	Rev. 9	No revision since Audit A-14-01
2	MP-Q&SI-5.3	Corrective Action	Rev. 13	Rev. 13	No revision since Audit A-14-01
3	MP-Q&SI-5.4	Identification of Nonconforming Conditions	Rev. 21	Rev. 21	No revision since Audit A-14-01
4	MP-Q&SI-5.6	Graded Approach	Rev. 4	Rev. 4	No revision since Audit A-14-01
5	MP-Q&SI-5.8	Qualifying Supply Chain Inspectors, Auditors, Lead Auditors, and Technical Specialists	Rev. 8	Rev. 8	No revision since Audit A-14-01
TRU Management					
6	MP-TRUW-8.1	Certification Plan for INL Transuranic Waste	Rev. 24	Rev. 24	No revision since Audit A-14-01
7	MP-TRUW-8.2	Quality Assurance Project Plan	Rev. 17	Rev. 17	No revision since Audit A-14-01
8	MP-TRUW-8.5	TRU Waste Certification	Rev. 29	Rev. 29	No revision since Audit A-14-01
9	MP-TRUW-8.8	Level I Data Validation	Rev. 35	Rev. 39	Rev. 36 - DCR-12827. Added step for ETR to enter comment to justify changes to assay results. Rev. 37 - DCR-13447. Moved various steps to INST-OI-12. Rev. 38 - DCR-13552. Changes for correction, clarification and to remove material not needed for new process. Rev. 39 - DCR-13605. Added verbiage for new requirement at Step 3.1.3.10.2: "For all debris waste identified as potential INL waste by specific IDC, or under designator UN-000, BN-180, or SD-179, identify any waste containers....."
10	MP-TRUW-8.9	Level II Data Validation	Rev. 26	Rev. 26	No revision since Audit A-14-01
11	MP-TRUW-8.11	Data Reconciliation	Rev. 25	Rev. 25	No revision since Audit A-14-01
12	MP-TRUW-8.12	Waste Receipt and Shipping Inspection	Rev. 24	Rev. 25	Rev. 24 - DCR-12651. Added changes required by 49 CFR 397.101 for HRCQ shipments. Incorporated new step required by Idaho State Police and Central Monitoring Room, Carlsbad, NM. Rev. 25 - DCR-13595. Periodic review. Entire document revised. Changes made due to shipping TRU waste to a commercial facility for storage. Other changes made to meet requirements of NRC Certificate of Compliance, 49 CFR, and 40 CFR 262.

Procedure Revision Matrix

No.	Procedure Number	Procedure Title	Rev. During Last Annual Audit	Rev. During Current Annual Audit	Brief Description of Procedure Changes
13	MP-TRUW-8.13	Collection, Review, and Management of Acceptable Knowledge Documentation	Rev. 25	Rev. 25	No revision since Audit A-14-01
14	MP-TRUW-8.14	Preparation of Waste Stream Profile Forms	Rev. 15	Rev. 15	No revision since Audit A-14-01
15	MP-TRUW-8.26	Reports to Management	Rev. 6	Rev. 6	No revision since Audit A-14-01
Conduct of Maintenance					
16	MP-CMNT-10.5	Measuring and Test Equipment Program	Rev. 10	Rev. 10	No revision since Audit A-14-01
17	INST-CMNT-10.5.1	Calibration and Control of Measuring and Test Equipment	Rev. 12	Rev. 13	Rev. 13 - DCR-13724. Added substeps at Step 4.4.1.2 for clarification in returning M&TE to service. Added steps to instruct close of the work order when a work order exists. Editorial changes made to formatting of steps per requirements of MP-DOCS-18.1.
18	MP-CMNT-10.14	In-Plant and Process Instrumentation Testing Program	Rev. 6	Rev. 6	No revision since Audit A-14-01
19	INST-CMNT-10.14.1	Testing In-Plant and Process Instrumentation	Rev. 8	Rev. 8	No revision since Audit A-14-01
Control of Design and Modification					
20	MP-CD&M-11.1	Change Control	Rev. 9	Rev.10	Rev. 10 - DCR-13350. Incorporated DOCS-BLUESHEET-11.
21	INST-CD&M-11.1.2	Facility Modification Proposal Preparation	Rev. 14	Rev. 15	Rev. 15 - DCR-12964. Corrected titles to LST-NSPC-03 in body of document and in reference section. Added LLW Certification Official to Step 4.5.5 (B), Optional Members.
22	MP-CD&M-11.2	Software Quality Assurance	Rev. 17	Rev. 21	Rev. 18 - DCR-12463. Updated to provide streamlined process for QC parameter changes. Rev. 19 - DCR-12848. Revised to modify USQ evaluation in the workflow. Rev. 20 - DCR-13253. Updated document to show location of stored documents; how WTS document numbers are created. Rev. 21 - DCR-13428. Updated document to clarify steps, line up with Test Track Pro and address steps that may be out of order.
23	INST-CD&M-11.2.1	Software Version Control	Rev. 8	Rev. 9	Rev. 9 - DCR-12792. Incorporated CBFO audit comments. No other changes made at this time.
24	INST-CD&M-11.2.2	Software Inventory Classification	Rev. 13	Rev. 16	Rev. 14 - DCR-13101. Changes incorporated to

Procedure Revision Matrix

No.	Procedure Number	Procedure Title	Rev. During Last Annual Audit	Rev. During Current Annual Audit	Brief Description of Procedure Changes
					resolve CAR 83111 to identify responsible individual. Rev. 15 - DCR-13514. Changes made to update Appendix A. Rev. 16 - DCR-13673. Made changes to support upgraded operating environment.
25	INST-CD&M-11.2.3	System Data Change Request	Rev. 7	Rev. 9	Rev. 8 - DCR-12849. Added a note to provide more information on raising SDCRs and deleted Steps 4.1.2.3 and 4.1.2.3.1 to modify the USQ evaluation in the work flow. Edited for consistency. Rev. 9 - DCR-13079. Added additional information to NOTE 1 prior to Step 4.1.4.2.
26	INST-CD&M-11.2.6	Temporary Software Override	Rev. 5	Rev. 5	No revision since Audit A-14-01
27	MP-PRPL-22.1	Production Planning	Rev. 33	Rev. 36	Rev. 34 - DCR-12944. Removed Section 3.4.2 (SDCR 2394); moved NOTE about Non-RF751 to top of page with other notes; incorporated changes to resolve CAR 78280 to include note specifying IDCs; modified section 3.4.9 for Direct Feed for delivery to WMF-676 to support TFUP process. Rev. 35 - DCR-13016. Incorporated DSA requirements. Revised note and rolldown. Rev. 36 - DCR-13369. Deleted steps requiring box classification. Removed the requirement to segregate lined and unlined TRU direct feed.
Training and Qualification					
28	MP-RTQP-14.4	Personnel Qualification and Certification	Rev. 21	Rev. 22	Rev. 22 - DCR-12846. Added a new note regarding use of the QWL, and a new definition for Qualified Watch List (QWL) to meet AI ISMS 79345 (QA.1-O-1 QA 2 Issue 10). Edited for consistency.
29	MP-RTQP-14.6	Job Analysis	Rev. 9	Rev. 10	Rev. 10 - DCR-12955. Incorporated changes from the 1070 assessment (Action Item 77120). Made editorial changes for consistency in procedure.
30	MP-RTQP-14.16	Training Program Evaluation	Rev. 8	Rev. 8	No revision since Audit A-14-01
31	MP-RTQP-14.19	Training Records Administration	Rev. 8	Rev. 9	Rev. 9 - DCR-12774. Removed requirement for EPD and ITP to be stored in employee files. Edited for consistency and company standards.

Procedure Revision Matrix

No.	Procedure Number	Procedure Title	Rev. During Last Annual Audit	Rev. During Current Annual Audit	Brief Description of Procedure Changes
32	LST-RTQP-03-IM	WIPP Training Requirements Implementation Matrix	Rev. 1	Rev. 1	No revision since Audit A-14-01
Procurement					
33	MP-PCMT-15.1	Acquisition of Material and Services	Rev. 14	Rev. 16	Rev. 15 - DCR-13126. Changed SPD to PD. Replaced all references to Form-2108 to Form-1018. Rev. 16 - DCR-13266. Updated with correct terminology and titles. Added VPP to procedure and made editorial corrections.
34	MP-PCMT-15.21	Material Management	Rev. 8	Rev. 8	No revision since Audit A-14-01
Management and Independent Assessments					
35	MP-M&IA-17.1	Management Assessment	Rev. 11	Rev. 11	No revision since Audit A-14-01
36	MP-M&IA-17.2	Independent Assessment	Rev. 11	Rev. 12	Rev. 12 - DCR-13000. Added new sections pertaining to corporate/external assessments and documentation of assessor qualifications. Resolved CAR-79008.
37	MP-M&IA-17.3	Quality Assurance Surveillance	Rev. 8	Rev. 8	No revision since Audit A-14-01
Documents and Records					
38	MP-DOCS-18.1	Developing Written Work Instructions	Rev. 14	Rev. 14	No revision since Audit A-14-01
39	MP-DOCS-18.2	Records Management	Rev. 17	Rev. 17	No revision since Audit A-14-01
40	MP-DOCS-18.3	Developing Management Procedures	Rev. 8	Rev. 8	No revision since Audit A-14-01
41	MP-DOCS-18.4	Document Control	Rev. 38	Rev. 39	Rev. 39 - DCR-12769. Complete rewrite to clarify roles and responsibilities, document types, and the document control process.
Retrieval and Characterization					
42	INST-OI-09	Retrieval Inspection Station Operations	Rev. 53	Rev. 57	Rev. 54 - DCR-12709. Changes made to update the Air limits for the Environmental permit. Rev. 55 - DCR-12934. Changes made to incorporate new sections for container creation for cargo unpacking, and for cargo closure, new Appendix E, and DSA/TSR implementation. Rev. 55 FC-1 - DCR-13314. Updating for torque specifications. Rev. 55 FC-2 - DCR-13361. Updating torque specifications. Rev. 56 - DCR-13348. Incorporated DCR-13314.

Procedure Revision Matrix

No.	Procedure Number	Procedure Title	Rev. During Last Annual Audit	Rev. During Current Annual Audit	Brief Description of Procedure Changes
					Changes made to remove information no longer needed, clarification on container types and markings, for better process flow, and to add a new section on trash cargo container creation. Rev. 56 FC-1 - DCR-13429. To update filter insertion events and container creation specifics. Rev. 57 - DCR-13497. Revised procedure for clarification, to remove information no longer required, and so that steps are specific for WTS activities located in the RCE waste export airlock or the CCE.
43	INST-OI-11	Waste Container Handling	Rev. 50	Rev. 57	Rev. 51 - DCR-12972. Incorporated DCR 12899. Deleted Section 4.6 which is no longer applicable. Rev. 52 - DCR-13014. Changes made to implement DSA/TSR implementation and DOE O 435.1, to remove JHA roll-downs and to specify storage instructions for SDOPs and MOPs. Rev. 53 - DCR-13056. Revised section number to Section 4.14.5 Rev. 54 - DCR-13147. Added BN631 to list of IDCs. Rev. 55 - DCR-13179. Updated Section numbers from 4.15 to 4.14. Rev. 55 FC-1 - DCR-13195. Incorporate revised drawing for drum stacking using plywood spacers. Rev. 55 FC-2 - DCR-13317. To incorporate steps for using a parrot beak handler and validating closure of drum. Rev. 55 FC-3 - DCR-13353. Delete FC-2. Add expectations for spotters using Parrot Beak. Rev. 55 FC-4 - DCR-13371. Add allowance for Parrot Beak use to handle TFUP drums. Rev 55 FC-5 - DCR-13380. Remove FC-4 for TFUP drums. Rev. 56 - DCR-13382. Incorporated FC-1 through FC-5. References corrected. Rev. 56 FC-1 - DCR-13486. Added direction and rigor

Procedure Revision Matrix

No.	Procedure Number	Procedure Title	Rev. During Last Annual Audit	Rev. During Current Annual Audit	Brief Description of Procedure Changes
					for handling loaded shredder boxes exported from Treatment Facility. Rev. 57 - DCR-13426. Incorporated 56 FC-1 (DCR-13486). Deleted some steps in Step 3.1 that do not apply or that are already captured in INST-OI-84. Made some other miscellaneous changes to incorporate new requirements or clarify steps. Editorial changes also made.
44	INST-OI-12	Real-Time Radiography Examination (Certification Scans)	Rev. 52	Rev. 55	Rev. 53 - DCR-12826. Step added for clarification for when WTS is not available. Rev. 54 - DCR-13224. Added substeps for performing replicate scans and independent observations. Rev. 55 - DCR-13556. Incorporated changes to process for preheat – no longer driven by specific days; added step and appendix to perform/support system calibration. Associated with SCR/SDCR-4569.
45	INST-OI-34	Non-Facility Visual Examination Operations	Rev. 28	Rev. 28	No revision since Audit A-14-01
46	INST-OI-45	Drum Filter Installation	Rev. 18	Rev. 20	Rev. 19 - DCR-12891. Deleted step 4.3.2 and associated warning: WTS already performs this function and will not allow a drum to enter DVS if it is a potential pyrophoric drum. Use type changed from Controlled Activity to General Use. Rev. 20 - DCR-13547. Added Step 3.1.9 and 3.1.10 per FMP-1404. Various changes made throughout procedure to support hydraulic oil solidification project; FMP-1413 for oil drums.
47	INST-OI-50	WMF-615 Filter Insertion Operations	Rev. 16	Rev. 18	Rev. 17 - DCR-12803. Incorporated FC-1 (DCR-12973). Incorporated DSA/TSR changes. Made changes to streamline operations and improve wording. Also added requirement to CAM operation during venting. Entire document revised. Rev. 18 - DCR-13443. Deleted Step 4.2.16.1; changes made at steps 4.5.4.1 and 4.9.8.7. Editorial changes made in step formatting per MP-DOCS-18.1 requirements.

Procedure Revision Matrix

No.	Procedure Number	Procedure Title	Rev. During Last Annual Audit	Rev. During Current Annual Audit	Brief Description of Procedure Changes
Treatment Facility					
48	INST-FOI-17	Facility Visual Examination Operations	Rev. 27	Rev. 27	No revision since Audit A-14-01
49	INST-FOI-20	Supercompactor and Post-Compaction Operations	Rev. 39	Rev. 42 FC-1	Rev. 40 - DCR-12747. Incorporated changes to implement new process for dealing with indeterminate silvers; new status code for indeterminate drums associated with FMP-1359; and to allow operations to deal with stuck pucks. Rev. 41 - DCR-12954. Incorporated changes for DSA implementation. Rev. 41 - DCR-13312. Added requirement to apply a torque verified sticker to the 100-gallon drum. Rev. 42 - DCR-13157. Periodic review. Changes made as part of SCR-4537 implementation and comments received. A few editorial changes made. Incorporated DCR-13312.

Procedure Revision Matrix

No.	Procedure Number	Procedure Title	Rev. During Last Annual Audit	Rev. During Current Annual Audit	Brief Description of Procedure Changes
Quality and Safety Improvement					
1	MP-Q&SI-5.1	Investigation and Root Cause Analysis	Rev. 9	Rev. 9	No revision since Audit A-14-01
2	MP-Q&SI-5.3	Corrective Action	Rev. 13	Rev. 13	No revision since Audit A-14-01
3	MP-Q&SI-5.4	Identification of Nonconforming Conditions	Rev. 21	Rev. 21	No revision since Audit A-14-01
4	MP-Q&SI-5.6	Graded Approach	Rev. 4	Rev. 4	No revision since Audit A-14-01
5	MP-Q&SI-5.8	Qualifying Supply Chain Inspectors, Auditors, Lead Auditors, and Technical Specialists	Rev. 8	Rev. 8	No revision since Audit A-14-01
TRU Management					
6	MP-TRUW-8.1	Certification Plan for INL Transuranic Waste	Rev. 24	Rev. 24	No revision since Audit A-14-01
7	MP-TRUW-8.2	Quality Assurance Project Plan	Rev. 17	Rev. 17	No revision since Audit A-14-01
8	MP-TRUW-8.5	TRU Waste Certification	Rev. 29	Rev. 29	No revision since Audit A-14-01
9	MP-TRUW-8.8	Level I Data Validation	Rev. 35	Rev. 39	Rev. 36 - DCR-12827. Added step for ETR to enter comment to justify changes to assay results. Rev. 37 - DCR-13447. Moved various steps to INST-OI-12. Rev. 38 - DCR-13552. Changes for correction, clarification and to remove material not needed for new process. Rev. 39 - DCR-13605. Added verbiage for new requirement at Step 3.1.3.10.2: "For all debris waste identified as potential INL waste by specific IDC, or under designator UN-000, BN-180, or SD-179, identify any waste containers....."
10	MP-TRUW-8.9	Level II Data Validation	Rev. 26	Rev. 26	No revision since Audit A-14-01
11	MP-TRUW-8.11	Data Reconciliation	Rev. 25	Rev. 25	No revision since Audit A-14-01
12	MP-TRUW-8.12	Waste Receipt and Shipping Inspection	Rev. 24	Rev. 25	Rev. 24 - DCR-12651. Added changes required by 49 CFR 397.101 for HRCQ shipments. Incorporated new step required by Idaho State Police and Central Monitoring Room, Carlsbad, NM. Rev. 25 - DCR-13595. Periodic review. Entire document revised. Changes made due to shipping TRU waste to a commercial facility for storage. Other changes made to meet requirements of NRC Certificate of Compliance, 49 CFR, and 40 CFR 262.

Procedure Revision Matrix

No.	Procedure Number	Procedure Title	Rev. During Last Annual Audit	Rev. During Current Annual Audit	Brief Description of Procedure Changes
13	MP-TRUW-8.13	Collection, Review, and Management of Acceptable Knowledge Documentation	Rev. 25	Rev. 25	No revision since Audit A-14-01
14	MP-TRUW-8.14	Preparation of Waste Stream Profile Forms	Rev. 15	Rev. 15	No revision since Audit A-14-01
15	MP-TRUW-8.26	Reports to Management	Rev. 6	Rev. 6	No revision since Audit A-14-01
Conduct of Maintenance					
16	MP-CMNT-10.5	Measuring and Test Equipment Program	Rev. 10	Rev. 10	No revision since Audit A-14-01
17	INST-CMNT-10.5.1	Calibration and Control of Measuring and Test Equipment	Rev. 12	Rev. 13	Rev. 13 - DCR-13724. Added substeps at Step 4.4.1.2 for clarification in returning M&TE to service. Added steps to instruct close of the work order when a work order exists. Editorial changes made to formatting of steps per requirements of MP-DOCS-18.1.
18	MP-CMNT-10.14	In-Plant and Process Instrumentation Testing Program	Rev. 6	Rev. 6	No revision since Audit A-14-01
19	INST-CMNT-10.14.1	Testing In-Plant and Process Instrumentation	Rev. 8	Rev. 8	No revision since Audit A-14-01
Control of Design and Modification					
20	MP-CD&M-11.1	Change Control	Rev. 9	Rev.10	Rev. 10 - DCR-13350. Incorporated DOCS-BLUESHEET-11.
21	INST-CD&M-11.1.2	Facility Modification Proposal Preparation	Rev. 14	Rev. 15	Rev. 15 - DCR-12964. Corrected titles to LST-NSPC-03 in body of document and in reference section. Added LLW Certification Official to Step 4.5.5 (B), Optional Members.
22	MP-CD&M-11.2	Software Quality Assurance	Rev. 17	Rev. 21	Rev. 18 - DCR-12463. Updated to provide streamlined process for QC parameter changes. Rev. 19 - DCR-12848. Revised to modify USQ evaluation in the workflow. Rev. 20 - DCR-13253. Updated document to show location of stored documents; how WTS document numbers are created. Rev. 21 - DCR-13428. Updated document to clarify steps, line up with Test Track Pro and address steps that may be out of order.
23	INST-CD&M-11.2.1	Software Version Control	Rev. 8	Rev. 9	Rev. 9 - DCR-12792. Incorporated CBFO audit comments. No other changes made at this time.
24	INST-CD&M-11.2.2	Software Inventory Classification	Rev. 13	Rev. 16	Rev. 14 - DCR-13101. Changes incorporated to

Procedure Revision Matrix

No.	Procedure Number	Procedure Title	Rev. During Last Annual Audit	Rev. During Current Annual Audit	Brief Description of Procedure Changes
					resolve CAR 83111 to identify responsible individual. Rev. 15 - DCR-13514. Changes made to update Appendix A. Rev. 16 - DCR-13673. Made changes to support upgraded operating environment.
25	INST-CD&M-11.2.3	System Data Change Request	Rev. 7	Rev. 9	Rev. 8 - DCR-12849. Added a note to provide more information on raising SDCRs and deleted Steps 4.1.2.3 and 4.1.2.3.1 to modify the USQ evaluation in the work flow. Edited for consistency. Rev. 9 - DCR-13079. Added additional information to NOTE 1 prior to Step 4.1.4.2.
26	INST-CD&M-11.2.6	Temporary Software Override	Rev. 5	Rev. 5	No revision since Audit A-14-01
27	MP-PRPL-22.1	Production Planning	Rev. 33	Rev. 36	Rev. 34 - DCR-12944. Removed Section 3.4.2 (SDCR 2394); moved NOTE about Non-RF751 to top of page with other notes; incorporated changes to resolve CAR 78280 to include note specifying IDCs; modified section 3.4.9 for Direct Feed for delivery to WMF-676 to support TFUP process. Rev. 35 - DCR-13016. Incorporated DSA requirements. Revised note and rolldown. Rev. 36 - DCR-13369. Deleted steps requiring box classification. Removed the requirement to segregate lined and unlined TRU direct feed.
Training and Qualification					
28	MP-RTQP-14.4	Personnel Qualification and Certification	Rev. 21	Rev. 22	Rev. 22 - DCR-12846. Added a new note regarding use of the QWL, and a new definition for Qualified Watch List (QWL) to meet AI ISMS 79345 (QA.1-O-1 QA 2 Issue 10). Edited for consistency.
29	MP-RTQP-14.6	Job Analysis	Rev. 9	Rev. 10	Rev. 10 - DCR-12955. Incorporated changes from the 1070 assessment (Action Item 77120). Made editorial changes for consistency in procedure.
30	MP-RTQP-14.16	Training Program Evaluation	Rev. 8	Rev. 8	No revision since Audit A-14-01
31	MP-RTQP-14.19	Training Records Administration	Rev. 8	Rev. 9	Rev. 9 - DCR-12774. Removed requirement for EPD and ITP to be stored in employee files. Edited for consistency and company standards.

Procedure Revision Matrix

No.	Procedure Number	Procedure Title	Rev. During Last Annual Audit	Rev. During Current Annual Audit	Brief Description of Procedure Changes
32	LST-RTQP-03-IM	WIPP Training Requirements Implementation Matrix	Rev. 1	Rev. 1	No revision since Audit A-14-01
Procurement					
33	MP-PCMT-15.1	Acquisition of Material and Services	Rev. 14	Rev. 16	Rev. 15 - DCR-13126. Changed SPD to PD. Replaced all references to Form-2108 to Form-1018. Rev. 16 - DCR-13266. Updated with correct terminology and titles. Added VPP to procedure and made editorial corrections.
34	MP-PCMT-15.21	Material Management	Rev. 8	Rev. 8	No revision since Audit A-14-01
Management and Independent Assessments					
35	MP-M&IA-17.1	Management Assessment	Rev. 11	Rev. 11	No revision since Audit A-14-01
36	MP-M&IA-17.2	Independent Assessment	Rev. 11	Rev. 12	Rev. 12 - DCR-13000. Added new sections pertaining to corporate/external assessments and documentation of assessor qualifications. Resolved CAR-79008.
37	MP-M&IA-17.3	Quality Assurance Surveillance	Rev. 8	Rev. 8	No revision since Audit A-14-01
Documents and Records					
38	MP-DOCS-18.1	Developing Written Work Instructions	Rev. 14	Rev. 14	No revision since Audit A-14-01
39	MP-DOCS-18.2	Records Management	Rev. 17	Rev. 17	No revision since Audit A-14-01
40	MP-DOCS-18.3	Developing Management Procedures	Rev. 8	Rev. 8	No revision since Audit A-14-01
41	MP-DOCS-18.4	Document Control	Rev. 38	Rev. 39	Rev. 39 - DCR-12769. Complete rewrite to clarify roles and responsibilities, document types, and the document control process.
Retrieval and Characterization					
42	INST-OI-09	Retrieval Inspection Station Operations	Rev. 53	Rev. 57	Rev. 54 - DCR-12709. Changes made to update the Air limits for the Environmental permit. Rev. 55 - DCR-12934. Changes made to incorporate new sections for container creation for cargo unpacking, and for cargo closure, new Appendix E, and DSA/TSR implementation. Rev. 55 FC-1 - DCR-13314. Updating for torque specifications. Rev. 55 FC-2 - DCR-13361. Updating torque specifications. Rev. 56 - DCR-13348. Incorporated DCR-13314.

Procedure Revision Matrix

No.	Procedure Number	Procedure Title	Rev. During Last Annual Audit	Rev. During Current Annual Audit	Brief Description of Procedure Changes
					Changes made to remove information no longer needed, clarification on container types and markings, for better process flow, and to add a new section on trash cargo container creation. Rev. 56 FC-1 - DCR-13429. To update filter insertion events and container creation specifics. Rev. 57 - DCR-13497. Revised procedure for clarification, to remove information no longer required, and so that steps are specific for WTS activities located in the RCE waste export airlock or the CCE.
43	INST-OI-11	Waste Container Handling	Rev. 50	Rev. 57	Rev. 51 - DCR-12972. Incorporated DCR 12899. Deleted Section 4.6 which is no longer applicable. Rev. 52 - DCR-13014. Changes made to implement DSA/TSR implementation and DOE O 435.1, to remove JHA roll-downs and to specify storage instructions for SDOPs and MOPs. Rev. 53 - DCR-13056. Revised section number to Section 4.14.5 Rev. 54 - DCR-13147. Added BN631 to list of IDCs. Rev. 55 - DCR-13179. Updated Section numbers from 4.15 to 4.14. Rev. 55 FC-1 - DCR-13195. Incorporate revised drawing for drum stacking using plywood spacers. Rev. 55 FC-2 - DCR-13317. To incorporate steps for using a parrot beak handler and validating closure of drum. Rev. 55 FC-3 - DCR-13353. Delete FC-2. Add expectations for spotters using Parrot Beak. Rev. 55 FC-4 - DCR-13371. Add allowance for Parrot Beak use to handle TFUP drums. Rev 55 FC-5 - DCR-13380. Remove FC-4 for TFUP drums. Rev. 56 - DCR-13382. Incorporated FC-1 through FC-5. References corrected. Rev. 56 FC-1 - DCR-13486. Added direction and rigor

Procedure Revision Matrix

No.	Procedure Number	Procedure Title	Rev. During Last Annual Audit	Rev. During Current Annual Audit	Brief Description of Procedure Changes
					for handling loaded shredder boxes exported from Treatment Facility. Rev. 57 - DCR-13426. Incorporated 56 FC-1 (DCR-13486). Deleted some steps in Step 3.1 that do not apply or that are already captured in INST-OI-84. Made some other miscellaneous changes to incorporate new requirements or clarify steps. Editorial changes also made.
44	INST-OI-12	Real-Time Radiography Examination (Certification Scans)	Rev. 52	Rev. 55	Rev. 53 - DCR-12826. Step added for clarification for when WTS is not available. Rev. 54 - DCR-13224. Added substeps for performing replicate scans and independent observations. Rev. 55 - DCR-13556. Incorporated changes to process for preheat – no longer driven by specific days; added step and appendix to perform/support system calibration. Associated with SCR/SDCR-4569.
45	INST-OI-34	Non-Facility Visual Examination Operations	Rev. 28	Rev. 28	No revision since Audit A-14-01
46	INST-OI-45	Drum Filter Installation	Rev. 18	Rev. 20	Rev. 19 - DCR-12891. Deleted step 4.3.2 and associated warning: WTS already performs this function and will not allow a drum to enter DVS if it is a potential pyrophoric drum. Use type changed from Controlled Activity to General Use. Rev. 20 - DCR-13547. Added Step 3.1.9 and 3.1.10 per FMP-1404. Various changes made throughout procedure to support hydraulic oil solidification project; FMP-1413 for oil drums.
47	INST-OI-50	WMF-615 Filter Insertion Operations	Rev. 16	Rev. 18	Rev. 17 - DCR-12803. Incorporated FC-1 (DCR-12973). Incorporated DSA/TSR changes. Made changes to streamline operations and improve wording. Also added requirement to CAM operation during venting. Entire document revised. Rev. 18 - DCR-13443. Deleted Step 4.2.16.1; changes made at steps 4.5.4.1 and 4.9.8.7. Editorial changes made in step formatting per MP-DOCS-18.1 requirements.

Procedure Revision Matrix

No.	Procedure Number	Procedure Title	Rev. During Last Annual Audit	Rev. During Current Annual Audit	Brief Description of Procedure Changes
Treatment Facility					
48	INST-FOI-17	Facility Visual Examination Operations	Rev. 27	Rev. 27	No revision since Audit A-14-01
49	INST-FOI-20	Supercompactor and Post-Compaction Operations	Rev. 39	Rev. 42 FC-1	Rev. 40 - DCR-12747. Incorporated changes to implement new process for dealing with indeterminate silvers; new status code for indeterminate drums associated with FMP-1359; and to allow operations to deal with stuck pucks. Rev. 41 - DCR-12954. Incorporated changes for DSA implementation. Rev. 41 - DCR-13312. Added requirement to apply a torque verified sticker to the 100-gallon drum. Rev. 42 - DCR-13157. Periodic review. Changes made as part of SCR-4537 implementation and comments received. A few editorial changes made. Incorporated DCR-13312.